3.3 FACILITY DESCRIPTION

The arrangement of the National Enrichment Facility (NEF) is shown in Figure 3.3-1, Facility Buildings and Areas. The major structures and functional areas of the facility are discussed in the following sections.

Distances from the facility to the site boundary were determined using guidance from U.S. NRC Regulatory Guide 1.145 (NRC, 1982), i.e., the nearest point on the building complex to the site boundary within a 45-degree sector centered on the compass direction of interest. These distances are provided in Table 3.3-1, Distances to Site Boundary and to Restricted Area Boundary and Wind Frequencies.

The distance to the nearest resident is greater than 4.26 km (2.63 mi).

3.3.1 Buildings and Major Components

3.3.1.1 Separations Building Modules (SBMS)

3.3.1.1.1 Design Description

The overall layout of Separations Building Module 1001 (SBM-1001) is presented in Figures 3.3-2 through 3.3-5. The overall layout of SBM-1003 is presented in Figures 3.3-6 through 3.3-9. The SBMs have two Cascade Halls, a UF_6 Handling Area, and a Process Services Corridor.

3.3.1.1.2 Functional Areas and Major Components

3.3.1.1.2.1 Cascade Halls

The Cascade Halls contains multiple cascades, each of which is made up of many centrifuges. Structural support walls split the Cascade Hall into Mini-Halls. The centrifuges are mounted on precast concrete floor mounting elements (flomels). Each Mini-Hall is enclosed by a structural steel frame, which supports insulated thermal sandwich panels. These panels surround each Mini-Hall to aid in maintaining a constant temperature within the enclosure. A temporary Mobile Thermal Wall System separated operating cascades from construction and installation of subsequent cascades in the same Mini-Hall.

3.3.1.1.2.2 Process Services Corridor

(See SAR § 12.2.1.1.1) The Process Services Corridor contains gas transport equipment, which connects the cascades to the UF_6 Feed System, Product Take-off System, Tails Take-off System and Contingency Dump System.

All three floors of the Process Services Corridor contains various pieces of equipment, control cabinets and electrical cabinets. In addition the second floor contains valve support frames, process pumps and chemical traps and the third floorcontains water pumps and heating and ventilation equipment. The various floors of the Process Services Corridor can be accessed by one of three stairways or by the freight elevator.

3.3.1.1.2.3 UF_6 Handling Area

The UF_6 Handling Area contains the UF_6 Feed System, Product Take-off System, Tails Take-off System, and Product Blending and Liquid Sampling System.

From the Feed System, natural uranium in the form of UF_6 is fed into the cascades. The Product Take-off System collects UF_6 enriched in the ^{235}U isotope while the Tails Take-off System normally collects UF_6 depleted in the ^{235}U isotope. Under abnormal process conditions the Tails Take-off will accept the contents of dumped cascades.

(See SAR § 12.2.1.1.2 and 12.2.1.1.3) The primary function of the Product Blending and Liquid Sampling System is to provide means to fill 30B product cylinders with UF_6 at a required ^{235}U concentration and to obtain homogenized liquid UF_6 samples. The Blending and Liquid Sampling Area (BLSA) contains the major components associated with the Product Blending System and the Product Liquid Sampling System. The Product Blending System is described in Section 3.4.6, Product Blending System. The Product Liquid Sampling System is described in Section 3.4.7, Product Liquid Sampling System. The UF_6 cylinders used in the autoclaves are protected from tornado missiles either by hardened structure around the autoclaves or by the design of the autoclave itself.

(See SAR § 12.2.1.1.4) Rail transporters travel on rails embedded along the entire width of the UF_6 Handling Area floor. The rail transporter transfers 30B and 48Y cylinders to and from the appropriate feed, feed purification, tails, or blending station, or product sampling autoclaves.

3.3.1.1.3 Building Construction

Each SBM superstructure is structurally independent from adjacent superstructure(s). Interior non-load bearing walls are constructed of concrete block with a painted finish. These walls extend to the underside of the structure where required.

The floors of the Cascade Halls have a floor profile quality classification of flat in accordance with American Concrete Institute (ACI) 117 to aid in the transport of assembled centrifuges.

Cascade Hall and UF_6 Handling Area floors are exposed concrete with a washable epoxy coating finish designed to resist process chemicals, decontamination agents and radiation.

3.3.1.2 Technical Services Building

The overall layout of the Technical Services Building (TSB) is presented in Figures 3.3-10and 3.3-11. The TSB is located adjacent to the CRDB. The TSB contains support areas for the facility. It also acts as a point of entry to the CRDB.

3.3.1.2.1 Design Description

The TSB is a two-story structure and totals approximately 5730 m^2 (61,700 ft^2) per floor. The classification of the TSB includes a mixture of uses including B, S, F and H occupancy. The majority of the Building is classified as Group B. The TSB is classified as a Type II-B Construction by the NMCBC and as a Type II (000) Construction by NFPA 220.

Several of the TSB areas are separated from adjacent areas by one-hour or greater fire-rated construction. These areas include:

- Chemical Storage and Waste Processing
- I&C Electrical Shop
- Mechanical Shop
- Warehouse

3.3.1.2.2 Functional Areas and Major Components

3.3.1.2.2.1 Control Room

The Control Room is the main monitoring and reporting point for the entire facility. The Control Room provides facilities to both directly and indirectly monitor and operate plant control systems. It is classified as a B Occupancy. It is a permanently manned area and contains the following equipment:

- Overview screen
- Control desk
- Fire alarm system
- Plant Control Systems
- Communication systems.

The Plant Control Systems and the Communications and Alarms System are described in Section 3.5.9, Control Systems and Section 3.5.7, Communication and Alarm Annunciation Systems, respectively.

3.3.1.2.2.2 Training Rooms

Several training rooms are available for Operational training. The rooms are classified as B Occupancy areas. The rooms are in the hardened area and contain the following:

- Plant Control System training system
- Centrifuge Monitoring System training system
- Central Control System switches and servers

3.3.1.2.2.3 Central Alarm Station (CAS) Area

The Central Alarm Station Area is used as the primary security monitoring station for the facility. The area includes the Central Alarm Station (CAS), offices, conference area and secure file storage area. It is classified as a B Occupancy area. All electronic security systems are controlled and monitored from this center. These systems include Closed Circuit Television (CCTV), Intrusion Detection and Assessment (IDA), Access Control and Radio Dispatch. The Secondary Alarm Station (SAS) is located in the Security Building and serves as a duplicate control console to the CAS.

3.3.1.2.2.4 Medical Room

(See SAR § 12.2.1.2.1) The Medical Room is designed to provide space for a nurse's station. This room is classified as a B Occupancy area.

3.3.1.2.2.5 Emergency Operations Center (EOC) Area

The Emergency Operations Center Room serves as an assembly area for emergency planning purposes. The EOC is classified as a B Occupancy area and has a general assembly room, offices and a meeting room.

3.3.1.2.2.6 Technical Support Center Assembly Room

The Technical Support Center Assembly Room serves as an assembly area for emergency planning purposes and has an area allocated for the storage of emergency equipment and supplies. It is classified as a B Occupancy area.

3.3.1.2.2.7 Break Room

(See SAR § 12.2.1.2.2) The Break Room has space for vending machines, tables and a small kitchenette. It is classified as a B Occupancy area.

3.3.1.2.2.8 I&C Electrical Shop Room

(See SAR § 12.2.1.2.3) The I&C Electrical Shop Room serves as a work area for general electrical and I&C components and maintenance. This room is classified as a F-2 Occupancy area.

3.3.1.2.2.9 Mechanical Shop Room

(See SAR § 12.2.1.2.4) The Mechanical Shop Room serves as a work area for general mechanical maintenance and work such as painting or welding. This room classified as a F-1 Occupancy area.

3.3.1.2.2.10 Chemical Storage Room

The Chemical Storage Room serves as a storage area for typical industrial chemicals. This room is classified as an H-1 Occupancy area.

3.3.1.2.2.11 Waste Processing Room

(See SAR § 12.2.1.2.5) The Waste Processing Room serves as a processing area of non radioactive wastes. This room is classified as a F-1 Occupancy area.

3.3.1.2.2.12 Environmental Monitoring Laboratory

(See SAR § 12.2.1.2.6) The Environmental Monitoring Laboratory is designed for preparing and analyzing samples associated with safety or regulatory compliance. This room is classified as a F-1 Occupancy area.

3.3.1.2.3 Building Construction

The TSB structure is a pre-engineered steel frame building with non-combustible construction throughout. The building is divided into two distinct areas referred to as Hardened and Non-Hardened areas. These two portions of the building are designed to be structurally independent of one another.

The Hardened area is completely enclosed by a tilt-up concrete panel system and cast-in-place roof slab, designed to resist tornado forces without failure. The exterior finish system of this portion of the building consists of metal building panels over insulation board.

The Non-Hardened area is a standard pre-engineered steel frame system with horizontal steel girt members, steel roof purlins and metal panel exterior walls and roof.

3.3.1.3 Cylinder Receipt and Dispatch Building (CRDB)

The overall layout of the CRDB is presented in Figures 3.3-12 and 3.3-13. The CRDB is located between two Separations Building Modules and directly north of the Technical Services Building.

3.3.1.3.1 Design Description

The CRDB is a one story building with a two story interior Bunkered Area. The CRDB utilizes steel frame and steel panel construction. The Bunkered Area inside the CRDB is comprised of reinforced poured concrete. The CRDB is approximately 240.3 m (788 ft) long, 48.1 m (158 ft) wide, and 14.8 m (48.5 ft) high (at the eave) and totals an area of 15,123 m^2 (162,782 ft^2) (including the 2nd floor of the Bunkered Area) . It is classified as an H-4 Occupancy area by the New Mexico Commercial Building Code (NMCBC). It is classified as a Type I-B Construction by the NMCBC and as a Type II (222) Construction by NFPA 220. The CRDB is separated from the TSB by three-hour fire-rated construction.

3.3.1.3.2 Functional Areas and Major Components

All UF_6 (48Y) feed and uranium byproduct (UBC or tails) cylinders and (30B) product cylinders are received and dispatched by the facility through the CRDB. It is designed to include space for the following:

Outside the CRDB's Bunkered Area:

- Loading and unloading of cylinders
- Inventory weighing
- Preparation and storage of protective cylinder overpacks
- Buffer storage of feed cylinders
- Semi-finished product storage
- Final product storage
- Prepared cylinder storage
- Staging (temporary storage) of tails and empty feed cylinders.

Inside the CRDB's Bunkered Area:

- Equipment decontamination
- Rebuilding of vacuum pumps
- UF_6 cylinder valve repair
- Solid waste collection and packaging
- Collection and treatment of liquid effluents

- Contaminated Material Handling-
- Mass spectrometry and chemical analysis
- Radiation monitoring
- Filtration and exhaust of gaseous effluent through Gaseous Effluent Vent Systems (GEVSs)
- HVAC equipment (supporting radiological and non-radiological portions of the CRDB)

Inside the CRDB steel butler building, there is an inner, two story stand-alone concrete structure referred to as the "Bunkered Area." Inside the CRDB Bunkered Area, the following functional areas are located on the ground floor:

- Ventilated Room (Room 143)
- Decontamination Workshop (Room 151)
- Vacuum Pump Rebuild Workshop (Room 154)
- Vacuum Pump Test Room (Room 155)
- Liquid Effluent Collection and Treatment Room (Room 156)
- Solid Waste Collection Room (161)
- Mass Spectrometry Laboratory (Room 136)
- Chemical Laboratory (Room 133)
- Sample Storage (Room 139)

Also inside the CRDB Bunkered Area, the following functional areas are located on the second floor:

- Gaseous Effluent Vent System (GEVS) Room (Room 242)
- Contaminated material handling Room (Room 261)
- Radiation Monitoring Laboratory (Room 262)

3.3.1.3.2.1 Solid Waste Collection Room

(See SAR § 12.2.1.3.1) The Solid Waste Collection Room is designed to process both wet and dry low-level radioactive solid waste. The Solid Waste Collection System is described in Section 3.5.13, Solid Waste Collection. Wet waste is categorized as radioactive, hazardous or industrial waste and includes assorted materials, oil recovery sludge, oil filters and miscellaneous hazardous wastes. Dry waste is also categorized as radioactive, hazardous or industrial waste and includes assorted materials, activated carbon, activated aluminum oxide, activated sodium fluoride, HEPA filters, scrap metal and miscellaneous hazardous materials.

This room contains approximately 288 m^2 (3,100 ft^2). It is classified as an H-4 Occupancy area. This area is separated from adjacent areas by two-hour fire-rated construction.

3.3.1.3.2.2 Vacuum Pump Rebuild Workshop

(See SAR § 12.2.1.3.2) The Vacuum Pump Rebuild Workshop is designed to provide space for the maintenance and re-building of plant equipment, mainly pumps which have been decontaminated in the Decontamination Workshop, and other miscellaneous plant equipment.

This room contains approximately 334.5 m^2 (3,600 ft^2). The workshop consists of an open area, a storage area and a data logging/progress chasing area. It is equipped with suitable area lighting, a degassing oven, heating, ventilating, and air conditioning (HVAC), CRDB GEVS, vacuum systems and a spray booth with a filter and extraction system. It is classified as an H-4 Occupancy area. This area is separated from the other adjacent areas by two-hour fire-rated construction.

3.3.1.3.2.3 Decontamination Workshop

(See SAR § 12.2.1.3.3.) The purpose of the Decontamination Workshop is to provide a maintenance facility for both UF_6 pumps and vacuum pumps. It is also used for the temporary storage and subsequent dismantling of failed pumps. The activities carried out within the Decontamination Workshop include receipt and storage of contaminated pumps, out-gassing, Perfluorinated Polyether (PFPE) oil removal and storage, pump stripping, and the dismantling and maintenance of valves and other plant components.

The Decontamination Workshop also provides a facility for the removal of radioactive contamination from contaminated materials and equipment. The Decontamination process consists of a series of steps including equipment disassembly, degreasing, decontamination, drying and inspection. Components commonly decontaminated include pumps, valves, piping, instruments, sample bottles, tools and scrap metal. The Decontamination System is described in Section 3.5.14, Decontamination Workshop.

The Decontamination Workshop is maintained at a lower pressure than any non-radiological surrounding areas. Therefore any equipment or personnel entering this room must go through an air-lock. For emergencies other emergency egress doors are provided.

This room contains approximately 362.3 m^2 (3,900 ft^2). It is classified as an H-4 Occupancy area. This area is separated from adjacent areas by two-hour fire-rated construction.

3.3.1.3.2.4 Ventilated Room

(See SAR § 12.2.1.3.4) The Ventilated Room is designed to provide space for the maintenance of chemical traps and cylinders. The Ventilated Room is also used for the temporary storage of full and empty chemical traps and the contaminated chemicals used in the chemical traps.

The activities carried out within the Ventilated Room include receipt and storage of saturated chemical traps, chemical removal and temporary storage, contaminated cylinder pressure testing, and UF_6 cylinder pump out and valve maintenance.

The Ventilated Room is maintained at a lower pressure than any non-radiological surrounding areas. Therefore, any equipment or personnel entering this room must go through an air-lock. For emergencies other emergency egress doors are provided.

Cylinders received at the site are expected to be in good working condition. Cylinders with deficient conditions are returned to an approved supplier for corrective maintenance and testing in accordance with ANSI N14.1-2001, provided the cylinder fully complies with all DOT transport requirements.

Cylinders with deficient conditions that do not fully comply with all DOT transport requirements must be corrected at the site. Such corrective maintenance may include valve replacement, plug replacement and post maintenance testing on containers with UF_6. Such corrective maintenanct and testing is performed in the CRDB Ventilated Room in accordance with ANSI N14.1-2001 and the LES QA Program.

This room contains approximately 297.3 m^2 (3,200 ft^2). It is classified as an H-4 Occupancy area. This area is separated from adjacent areas by two-hour fire-rated construction.

3.3.1.3.2.5 Liquid Effluent Collection and Treatment Room

The Liquid Effluent Collection and Treatment Room is designed for the collection of potentially contaminated liquid effluents produced on site, which are monitored for contamination prior to processing. These liquid effluents are stored in tanks prior to processing. The effluents are segregated into significantly contaminated effluent, slightly contaminated effluent or non-contaminated effluent. Liquid effluents produced by the facility include hydrolysed uranium hexafluoride and aqueous laboratory effluent, degreaser water, citric acid, floor washings, miscellaneous condensates, and active area hand washings/shower water. The Liquid Waste Collection System is described in Section 3.5.12, Liquid Effluent Collection and Treatment System. The LECTS Room will also be used for trap filling.

This room contains approximately 323.2 m^2 (3,480 ft^2). It is classified as an H-4 Occupancy area. The Liquid Effluent Collection and Treatment Room is separated from adjacent areas by two-hour fire-rated construction.

3.3.1.3.2.6 Contaminated Material Handling Room

(See SAR § 12.2.1.3.6) The Contaminated Material Handling Room, located in the CRDB, provides an area for the Recycling Group to store protective clothing drums and other material/waste containers that have been assayed and released from the Safeguards item control program. This area will normally provide storage for containers awaiting Radiation Protection survey to be either unconditionally released or transferred to the solid waste collection system for additional processing. In addition, the Contaminated Material Handling Room will contain cabinets and bins with supplies to support the waste program and a connection to the CRDB GEVS to support ventilation engineering controls when required.

This room contains approximately 46.4 m^2 (500 ft^2). It is classified as an H-4 Occupancy area. The Contaminated Material Handling Room is separated from adjacent areas by two-hour fire-rated construction.

3.3.1.3.2.7 Gaseous Effluent Vent System (GEVS) Room

(See SAR § 12.2.1.3.7) The GEVS Room is located in the second floor of the CRDB's Bunkered Area, and contains the fan/filters systems and other major components for the CRDB GEVS. This GEVS is designed to remove UF_6, particulates containing uranium, and HF from potentially contaminated process gas streams. Pre-filters and HEPA filters remove particulates, including uranium particles, and impregnated activated charcoal filters remove any residual traces of uranium and HF. The GEVS are described in Section 3.4.9, Gaseous Effluent Vent Systems (GEVS).

This room contains approximately 355 m^2 (3,820 ft^2). It is classified as an H-4 Occupancy area and is separated from adjacent areas by two-hour fire-rated construction.

3.3.1.3.2.8 Mass Spectrometry Laboratory

(See SAR § 12.2.1.3.8) The Mass Spectrometry Laboratory is designed for the purpose of measuring the isotopic abundance of various uranium isotopes in prepared samples, the bulk comprising hydrolysed uranium hexafluoride.

This room contains approximately 167.2 m^2 (1,800 ft^2). It is classified as an H-4 Occupancy area and is separated from adjacent areas by two-hour fire-rated construction.

3.3.1.3.2.9 Chemical Laboratory

(See SAR § 12.2.1.3.9) The Chemical Laboratory is designed for the purpose of analyzing solid and liquid samples taken from all areas of the facility. It includes space for an analytical area, sub sampling area, wash area and weighing area, and a sample storage area.

This room contains approximately 257.8 m2 (2,775 ft2). It is classified as an H-4 Occupancy area and is separated from adjacent areas by two-hour fire-rated construction.

3.3.1.3.2.10 Radiation Monitoring Laboratory

(See SAR § 12.2.1.3.10) The Radiation Monitoring Laboratory is designed to be the point of demarcation between non-contaminated areas and potentially contaminated areas of the facility. It includes space for a hand and foot monitor, hand washing facilities, safety showers, and boot barrier access.

This room contains approximately 55.7 m^2 (600 ft^2). It is classified as an H-4 Occupancy area and is separated from adjacent areas by two-hour fire-rated construction.

3.3.1.3.2.11 Truck Bay/Shipping and Receiving Area

(See SAR § 12.2.1.3.11) The Truck Bay, located at the North end of the CRDB, is used for the receipt of incoming and the dispatch of outgoing UF_6 (48Y) feed and tails cylinders, UF_6 (30B) product cylinders, and overpacks for 30Bs. The Truck Bay is also used as a place to load packaged low-level radioactive wastes onto trucks for transportation off site to a licensed processing facility or licensed disposal facility. It is also used for miscellaneous shipping and receiving.

This area is approximately 35.2 m (115.5 ft) x 47.5 m (156 ft) and totals 1,672 m2 (18,018 ft2). It is classified as an H-4 Occupancy area.

3.3.1.3.2.12 Cylinder Storage Areas

(See SAR § 12.2.1.3.12) The majority of the floor area is used as lay-down space for cylinders of all types. The cylinders are placed on specially designed cradles to stabilize them while being stored in the CRDB.

Cylinders are delivered to the facility in transport trucks. The trucks enter the CRDB through the main vehicle loading bay, located at the North end of the building, which is equipped with vehicle access platforms that aid with cylinder loading and unloading. Three double girder bridge cranes on two sets of crane rails handle the cylinders within the CRDB. Each crane spans half the width of the CRDB. The two bridge cranes on the West side run the full length of the building. The third bridge crane on the East side services the area North of the Bunkered Area.

After delivery, the cylinders are processed for receipt. They are inspected and weighed and moved to their appropriate locations. UF_6 feed cylinders are delivered to a storage area in the CRDB or to a storage area in the UBC Storage Pad.

When required for processing, the cylinders, which have been placed in storage areas are moved by the overhead cranes to the stillages and rail transporter located in the cylinder transporting and stillage area at the South end of the CRDB. The rail transporter moves cylinders from the CRDB to the adjacent SBM UF_6 handling areas. Cylinders are removed from the facility in the same fashion.

3.3.1.3.3 Building Construction

The CRDB superstructure will consist of a QA Level-1 (Graded) steel building shell, with a separate and seismically independent interior Bunkered Area that meets all QA Level-1 requirements. The building is divided into two distinct areas referred to as the Bunkered Area and the Non-Bunkered area (also referred to as CRDB steel building or CRDB building shell). These two portions of the building are designed to be structurally independent of one another.

The CRDB superstructure (Non-Bunkered Area) is a standard pre-engineered steel frame building with horizontal steel girt members, steel roof purlins, metal panel exterior walls and roof, with non-combustible construction throughout. The building shell is designed to withstand the effects of external events (i.e., seismic, tornado and high wind, snow and ice load, and maximum local precipitation and flooding) as reflected in Section 3.2, except tornado missiles. It is considered acceptable if the metal wall and roof panels separate from the steel superstructure under extreme tornado wind conditions. The CRDB superstructure is not required to provide missile protection or to prevent water intrusion. The floor of each area consists of a 20.3 cm (8") reinforced concrete slab. Floor areas where rails systems are emplaced for the transport of UF_6 cylinders consist of a 61 cm (24") reinforced concrete slab.

To assure adequate structural design margin against collapse of the superstructure under these conditions, the CRDB superstructure will be designed in accordance with the AISC ASD Manual of Steel Construction and ACI 318, Building Code Requirements for Structural Concrete. In addition, the building design analyses will be performed in accordance with accepted industry standards, including ASCE 4, Seismic Analysis of Safety-Related Nuclear Structures, and ASCE 7, Minimum Design Loads for Buildings and Other Structures. The CRDB superstructure design will be verified per QL-1 requirements and designated a QL-1G program. Construction of the CRDB structure will be in accordance with the graded QL-1 program described in the QAPD. These design and quality requirements will provide a substantial margin of safety against collapse.

The Bunkered Area is a two-story structure that is completely enclosed by a poured in place concrete foundation, floors, walls, and cast-in-place roof slab. The first floor of each area consists of a 20.3 cm (8") reinforced concrete slab. Floor areas where rails systems are emplaced for the transport of UF_6 cylinders in the Ventilated Room and an adjacent airlock consist of a 61 cm (24") reinforced concrete slab. The second floor consists of a 15.2 cm (6") to 20.3 cm (8") reinforced concrete floor slab. The roof system of the Bunkered Area consists of a 20.3 cm (8") reinforced concrete roof slab. The CRDB Bunkered Area is designed to withstand the effects of external events (i.e., seismic, tornado and high wind, tornado missiles, snow and ice load, maximum local precipitation, and flooding) as reflected in Section 3.2. The design and construction of the Bunkered Area will be in accordance the QA Level 1 (QL-1) program.
The three double girder bridge cranes on two sets of rails that serve the CRDB are supported by steel columns anchored to the foundation adjacent to the main building support columns.

The floor areas of the CRDB, which are used as a part of the centrifuge transport path, have a floor profile quality classification of flat in accordance with DIN 18202 (Table 3, Line 4), to aid in the transport of assembled centrifuges. According to DIN 18202 the surface profile shall not deviate more than 3 mm per meter in length.

Floors in the CRDB are of exposed concrete with a washable epoxy coating finish. The coatings are designed to resist process chemicals, decontamination agents and radiation.

3.3.1.4 Centrifuge Assembly Building (CAB)

The overall layout of the Centrifuge Assembly Building (CAB) is presented in Figures 3.3-14 and 3.3-15. The Centrifuge Assembly Building is located adjacent to the CRDB.

3.3.1.4.1 Design Description

The CAB is a steel frame building with insulated metal panel exterior walls and with built-up roofing on metal deck roof.

The CAB is used for assembly, inspection and mechanical testing of the centrifuges prior to installation in the SBM Cascade Halls. For protection of CAB investments (centrifuges and equipment) against the deleterious effects of airborne contaminations, centrifuge assembly activities are performed in clean conditions per the guidelines of ISO 14644-1 class 8; operational state. The building is divided into the following distinct areas:

- Centrifuge Component Storage Area
- Centrifuge Assembly Area 'A'
- Centrifuge Assembly Area 'B'
- Centrifuge Assembly Area 'C'
- Assembled Centrifuge Storage Area
- Building Office Area
- Centrifuge Test and Post Mortem Facilities
- Electrical rooms on the South, East and West sides
- Air compressor room South side

3.3.1.4.2 Functional Areas and Major Components

3.3.1.4.2.1 Centrifuge Component Storage Area

The Centrifuge Component Storage Area serves as the initial receipt location for the centrifuge parts. It is designed to store up to four weeks stock of centrifuge components . These components are delivered by truck in specifically designed containers, which are then packed into International Organization for Standardization (ISO) freight containers. The containers are off-loaded via fork lift truck and placed in the storage area through one of two roll up doors located at the east end of the CAB.

The Centrifuge Component Storage Area acts as an acclimatization area to allow components to equilibrate with the climatic conditions of the Centrifuge Assembly Area.

Transfer of components and personnel between the Centrifuge Component Storage Area and the Centrifuge Assembly Areas is via an airlock to prevent ingress of airborne contaminants.

3.3.1.4.2.2 Centrifuge Assembly Areas

Centrifuge components are assembled into complete centrifuges in these areas. Prior to installation into the cascade, the centrifuge has to be conditioned, which is done in the Centrifuge Assembly Areas prior to storage in the Assembled Centrifuge Storage Area.

A separate installation team will access this area and transfer the assembled and conditioned centrifuges to the Cascade Halls for deployment.

3.3.1.4.2.3 Building Office Area

A general office area is located adjacent to the Centrifuge Assembly Area. It contains the main personnel entrance to the building as well as entrances to the Centrifuge Component Storage Area and Centrifuge Assembly Area. It is a two-story area that includes the following:

- Offices
- Locker Rooms - The locker rooms provide space where employees can dress in protective clothing as required
- Canteen
- Two Computer Server Rooms
- Maintenance Area
- Inspection and Test Laboratory
- Air Locks
- Air Compressor Room – (one of two: the other air compressor room is located on the South side of the CAB)
- An Elevator

3.3.1.4.2.4 Centrifuge Test and Post Mortem Facilities

The Centrifuge Test Facility is designed to:

- Provide a means of functionally testing the performance of production centrifuges to ensure compliance with design parameters
- Investigate production and operational problems.
- Test either a single centrifuge or two simultaneously

The Centrifuge Post Mortem Facility is designed for investigating problems with production centrifuges. Based on 30 years of European experience, the demand for centrifuge post mortems is infrequent.

The principal functions of the Centrifuge Post Mortem Facility are:

- To facilitate dismantling of contaminated centrifuges using equipment and processes, which minimize the potential to contaminate personnel or adjacent facilities
- To prepare potentially contaminated components and materials for transfer prior to disposal.

Centrifuges are brought into the facility on a specially designed transport cart . The facility is also equipped with radiological monitoring devices, toilets and washing facilities, and hand, foot and clothing personnel monitors to detect surface contamination.

The Centrifuge Post Mortem Facility includes a centrifuge dismantling area and an inspection area. The centrifuge dismantling area includes a stand onto which the centrifuge to be dismantled is mounted providing access to the top and bottom of the centrifuge. A local jib crane is located over the stand to enable removal of the centrifuge from the transport cart and facilitate loading onto the stand. The inspection area includes an inspection bench, portable lighting, a microscope, an endoscope and a digital video/camera.

3.3.1.4.3 Building Construction

The CAB is a metal building that is constructed on a concrete slab. The floors of the CAB Assembled Centrifuge Storage Area have a floor profile quality classification of flat in accordance with ACI 117 to aid in the transport of assembled centrifuges.

Floors in the CAB (except for certain office areas) are of exposed concrete with a washable epoxy coating finish. The coatings are designed to resist process chemicals, decontamination agents and radiation.

3.3.1.5 Not Used

3.3.1.6 (See SAR § 12.2.1.4) Uranium Byproduct Cylinder (UBC) Storage Pad

The facility utilizes an area outside of the CRDB for storage of UBCs, which contain UF_6 that is depleted in ^{235}U. The tails are stored under vacuum in corrosion resistant Type 48Y cylinders. The UBC Storage Pad will also be used for buffered storage of full and empty feed (48Y) cylinders and clean, empty product (30B) cylinders. The UBC Storage Pad is shown on Figure 3.3-1, Facility Buildings and Areas.

3.3.1.6.1 Design Description

The UBC Storage Pad is designed to provide storage for UBCs and full production buffered storage of approximately:

- 24 months stock of full feed cylinders,
- 24 months supply of empty feed cylinders, and
- 12 months supply of clean, empty product cylinders.

Approximately 625 UBC per year are filled for storage. The UBC Storage pad is sized to accommodate 15,727 cylinders (capacity equivalent to 25 years of facility operation). These cylinders are stacked two high. Cradles are used to store the cylinders approximately 200 mm (8 in) above ground level. The UBC Storage Pad is constructed in approximately 112,000 sq. ft. (2.6 acre) sections throughout the operating life of the facility to ensure sufficient cylinder storage capacity.

3.3.1.6.2 Functional Areas and Major Components

The UBC Storage Pad layout is based on moving the cylinders with mobile gantry cranes and powered vehicles. Powered vehicles are used to move the cylinders from the CRDB to the UBC Storage Pad. A single girder mobile gantry crane is used to remove the cylinders from the powered vehicles and place them in the UBC Storage Pad. The mobile gantry crane is designed to double stack the cylinders in the storage area. When feed or product cylinders exit the UBC Storage Pad, the mobile gantry crane and powered vehicles are used to move the cylinders.

3.3.1.6.3 Construction

The UBC Storage Pad is constructed of a concrete pad with a dedicated collection and drainage system. Access to the UBC Storage Pad is controlled by the site perimeter fence and in accordance with IROFS 36e, 50a and 50h.

3.3.1.7 (See SAR § 12.2.1.5) Central Utilities Building (CUB)

The Central Utilities Building (CUB) is shown on Figure 3.3-16.

3.3.1.7.1 Design Description

The CUB has an approximate total area of 3044 m^2 (32,766 ft^2). It is classified as a F-1 Occupancy area by the New Mexico Commercial Building Code (NMCBC). It is classified as a Type II-B Construction by the NMCBC and as a Type II (000) Construction by NFPA 220. The Central Utilities Building is designed to meet the occupant and exiting requirements set by the International Fire Code and the NMCBC.

3.3.1.7.2 Functional Areas and Major Components

The Central Utilities Building houses two diesel generators, which provide the site with standby power. The Standby Generator System is discussed in Section 3.5.10, Standby Diesel Generator System. The building contains day tanks, switchgear, and control panels. The rooms housing the diesels are constructed independent of each other with adequate provisions made for maintenance, equipment removal and equipment replacement.

The diesel fuel unloading area provides tanker truck access to the two above ground tanks, which provide diesel fuel storage. Secondary containment is provided to contain spills or leaks from the above ground diesel fuel tanks.

The CUB also houses the centrifuge cooling water pumps and air compressors. These systems are described in Sections 3.5.5, Cooling Water System and 3.5.3, Compressed Air System, respectively.

3.3.1.7.3 Building Construction

The CUB superstructure is cast in place concrete construction with shear walls and pilasters that support steel framing for roof slabs.

The CUB roof structure consists of concrete slabs poured over steel decking supported by wide flange beams (purlins). Rigid insulation and multi-ply composite roofing system is installed atop the concrete roof slab. The roof assembly will have a minimum combined thermal resistance of R-20.

Exterior and interior walls will be cast-in-place concrete load bearing shear walls. Exterior walls will have a minimum combined thermal resistance value of R-10.

Interior non-load bearing walls are constructed of 200 mm (8 in) concrete block with a painted finish. These interior walls extend to the underside of the structure where required.

Floors consist of exposed concrete with a washable epoxy coating finish.

3.3.1.8 (See SAR § 12.2.1.6) Administration Building

3.3.1.8.1 Design Description

The Administration Building is near the TSB. It is over 3,000 m2 (32,000 ft2) and 6.0 m (19.8 ft) high. It is classified as a B Occupancy area by the New Mexico Commercial Building Code (NMCBC). It is classified as a Type II-B Construction by the NMCBC and as a Type II (000) Construction by NFPA 220. The Administration Building is designed to meet the occupant, and exiting requirements set by the International Fire Code and the NMCBC. The entire building is sprinklered.

3.3.1.8.2 Functional Areas and Major Components

The general office areas for the facility are located in the Administration Building. Personnel enter the Administration Building and general office areas via the main lobby.

Over 50 work locations are provided for the plant office staff. The office environment consists of private, semiprivate, and open office space. The lobby is designed to also act as an assembly area for emergency planning purposes. Area has been allocated for the storage of emergency equipment and supplies and emergency monitoring equipment. It also contains a kitchen, break room, conference rooms, and building service facilities such as a mechanical equipment room. An open office layout allows for flexibility in space allocation.

3.3.1.8.3 Building Construction

The Administration Building superstructure is designed of structural steel framing.

The roof structure consists of metal decking over structural steel framing. The metal decking is covered with a built-up roof system. The roof assembly has a minimum combined thermal resistance value of R-20.

Exterior walls consist of a combination of architectural metal panels and a curtain wall glazing system. The exterior wall assembly has a minimum combined thermal resistance value of R-10. The interior side of the exterior wall is faced with 16 mm (5/8 in) gypsum wallboard.

Interior non-load bearing walls are constructed of 92 mm (4 in) metal studs filled with batt insulation and faced with 16 mm (5/8 in) gypsum wallboard. Walls extend to 150 mm (6 in) above the ceiling or to the underside of the structure where required.

3.3.1.9 (See SAR § 12.2.1.7) Site Security Buildings

3.3.1.9.1 Design Description

The main Security Building is located at the entrance to the facility. It functions as a security checkpoint for incoming and outgoing personnel. Employees and visitors that have access approval are screened at the main building. A smaller Gatehouse has been placed at the secondary site entrance. Vehicle traffic including common carriers, such as mail delivery trucks, are screened at this location.

The main Security Building also contains the Visitor Center. There are adequate physical barriers, locked doors, etc to separate the visitor accessible areas from areas designed to support the security.

3.3.1.9.2 Functional Areas and Major Components

3.3.1.9.2.1 Main and Secondary Security Buildins

The main and secondary Security Buildings are located at the entries to the site. They are classified as a B Occupancy area by the New Mexico Commercial Building Code (NMCBC). It is classified as a Type II-B Construction by the NMCBC and as a Type II (000) Construction by NFPA 220.These buildings are designed to meet the occupant and exiting requirements set by the International Fire Code and the NMCBC.

The Entry Exit Control Point (EECP) for the facility is located in the main Security Building. All personnel access to the facility occurs at this location. Vehicular traffic passes through a security checkpoint before being allowed to park. Parking is located outside of the Controlled Access Area (CAA) security fence.

Personnel requiring access to facility areas or the CAA must pass through the EECP. The EECP is located at the rear of the main lobby and is designed to facilitate and control passage of authorized facility personnel and visitors to and from the CAA. Personnel entering the security Controlled Access Area are required to undergo, at a minimum, the following security screening at the EECP:

- Positive Identification – photo badge and/or biometrics
- Verification of access authorization
- Inspection of persons for unauthorized material (pass through a magnetometer)

- Inspection of all hand carried packages (x-ray screening).

In the main lobby, employees receive their badges and proceed through a turnstile into the office area or the EECP. Visitors check-in at the main lobby, where a receptionist notifies plant personnel of their arrival.

Entry to the facility areas from the Security Building is only possible through the EECP.

3.3.1.9.2.2 Security Diesel Generator

The Security Diesel Generator provides backup 480 volt power to select security and security related equipment during a loss of normal power. The Security Diesel Generator is not a requirement for safe operation of the plant. The Security Diesel Generator is designed for outdoor use and is located south of the TSB within a walled enclosure to reduce accessibility, but it is otherwise open to the environment. The fuel oil storage capacity tank is sized for 24 hours of continuous operation at 100% rated power output.

3.3.1.9.3 Building Construction

The Security Building superstructures are designed of structural steel framing.

The roof structures consist of metal decking over structural steel framing. The metal decking is covered with a built-up roof system. The roof assembly has a minimum thermal resistance value of R-20.

Exterior walls consist of a combination of architectural metal panels and glazing. Exterior wells meet the requirements of the New Mexico Energy Conservation Code at a minimum. The interior side of the exterior wall is faced with 16 mm (5/8 in) gypsum wallboard.

Interior non-load bearing walls are constructed of metal studs filled with batt insulation and faced with 16 mm (5/8 in) gypsum wallboard.

Floors in the Security Buildings consist of carpet, tile, and concrete.

3.3.2 Structural Design Criteria

The structural and mechanical design load criteria are based on the environmental and geologic features of the National Enrichment Facility site identified in Section 3.2, Site Description, and the data presented in the accepted Industry Codes and Standards. The design criteria meets the applicable baseline design criteria established in 10 CFR 70.64, Requirements for new facilities or new processes at existing facilities (CFR, 2003). The design is based on the codes and loads described below.

As part of the Integrated Safety Analysis for external events, the following structures (buildings and areas) were determined to be safety significant and are required to withstand the design basis natural phenomena hazards and external hazards defined in Section 3.2, with exceptions as noted below:

- The Separations Building Modules UF_6 Handling Area, Process Services Corridor, and Cascade Halls are IROFS27e and are not required to meet the requirements of ASCE 43-05.

- The Cylinder Receipt and Dispatch Building Shell is IROFS27e and is not required to meet the requirements of ASCE 43-05.

Safety significant structures shall be designed to withstand the effects of external events (i.e., seismic, tornado and high wind, tornado missiles, snow and ice load, and maximum local precipitation) reflected in Section 3.2. (See Section 3.3.2.2.3.2 for exceptions related to tornado missiles.)

The liquid UF_6 cylinders in the autoclaves are protected from tornado missiles either by hardened structure around the autoclaves or by the design of the autoclave itself.

Above ground liquid storage tanks and water impoundments shall be designed such that they do not pose a flooding risk that could damage critical structures and/or systems under an assumed catastrophic failure and release of full contents (may be shown either by design, amount of contents or physical location).

Items relied on for safety (IROFS) associated with facility structures are listed in Section 3.8, IROFS.

3.3.2.1 Codes and Standards

The following codes and standards are generally applicable to the structural design of the National Enrichment Facility:

- New Mexico Commercial Building Code
- International Building Code
- ASCE 7, Minimum Design Loads for Buildings and Other Structures
- ACI 318, Building Code Requirements for Structural Concrete
- ACI 349, Code Requirements for Nuclear Safety Related Concrete Structures
- AISC Manual of Steel Construction
- ANSI/AISC N690, American National Standard Specification for the Design, Fabrication, and Erection of Steel Safety-Related Structures for Nuclear Facilities
- PCI Design Handbook
- American Society of Testing and Materials.

3.3.2.2 Structural Design Loads

3.3.2.2.1 Wind Loadings

"Wind loadings for structures are in accordance with provisions of the International Building Code and Section 6.5 of ASCE 7. The annual probability of recurrence for wind loadings used in designing Safety Significant Structures cannot be greater than 1.0 E-5."

3.3.2.2.2 Cyclonic Loadings

3.3.2.2.2.1 Tornado

The safety significant structures and components exposed to wind are designed to withstand tornado loadings including tornado-generated missiles. The tornado parameters are based on a 100,000-year period of recurrence.

The design parameters applicable to the design tornado are as follows:

Design wind speed:	302 km/hr	(188 mi/hr)
Radius of damaging winds:	130 m	(425 ft)
Atmospheric pressure change (APC):	-390 kg/m^2	(-80 lb/ft^2)
Rate of APC:	-146 kg/m^2/s	(-30 lb/ft^2/s)

The procedures used for transforming the impactive missile loadings into effective loads are discussed in Section 3.3.2.2.3, Projectile Protection.

3.3.2.2.2.2 Hurricane

The NEF site is approximately 805 km (500 mi) inland from the nearest coastline. Hurricane wind is not a governing condition in comparison to normal wind and tornado wind.

3.3.2.2.3 Projectile Protection

Projectile protection is provided for all equipment, systems and components in the safety significant areas such that internally generated or externally generated missiles will not cause the release of radioactive materials that exceeds the 10 CFR 70.61 performance requirements or prevent the safe and orderly shutdown of the facility.

3.3.2.2.3.1 Internal Projectiles

Internally generated projectiles are not a concern in the Separations Building Modules (SBMs). The types of equipment that are potential sources of projectiles are blowers, fans, pumps, compressors, high pressure gas cylinders and the centrifuges. The centrifuges have been tested to mechanical failure. These tests have demonstrated that the centrifuge casing will contain any internal projectiles generated as a result of a centrifuge failure. Likewise, in the SBMs and other safety significant areas of the facility, the components of the other pieces of rotating equipment located in these areas that could become missiles do not have sufficient energy to break through their respective housings or casings. Also, there are no high energy piping systems in these areas that could be the source of jet impingements or pipe whip. High pressure gas cylinders will be handled and stored on site to preclude the generation of internal missiles.

3.3.2.2.3.2 External Projectiles

The only external projectiles that have been identified as a design consideration are tornado-generated missiles. The barriers and buildings protecting equipment and components in the safety significant areas, with the exception of the SBMs and the CRDB shell (non-Bunkered Area), are designed to withstand and absorb tornado generated missile impact loads without causing any damage to the protected equipment and components.

Aircraft crashes are not credible events for the NEF site. Additional information concerning aircraft crashes is found in Section 3.2.

A. Tornado-Generated Missiles

The tornado-generated missiles are associated with the tornado event described in Section 3.3.2.2.2.1, Tornado. The types of missiles selected and the related design parameters were determined as part of the tornado study for the NEF site. These missiles are associated with the design basis tornado (DBT), which has an annual probability of occurrence of 1.0E-5. The design parameters include:

Missile: 2 in. x 4 in. timber plank, 6.80 kg (15 lb)

Horizontal speed	137 km/hr	(85 mi/hr)
Maximum height above ground.	60 m	(200 ft)
Vertical speed	88 km/hr	(57 mi/hr)

Missile: 76.2 mm (3 in) diameter, steel pipe, 34 kg (75 lb)

Horizontal speed	80 km/hr	(50 mi/hr)
Maximum height above ground	9.1 m	(30 ft)
Vertical speed	48 km/hr	(30 mi/hr)

Missile: Automobile, 1361 kg (3000 lb)

Horizontal speed	32 km/hr	(20 mi/hr)

The missile impact generates two types of effects on the barriers and buildings. First are the local effects, and second are the overall responses of the barrier and portions thereof to missile impact. The procedures employed in the design of the barriers for those effects are described below.

B. Local Effects of Tornado-Generated Missiles on Building Structures

The missiles are categorized as either hard or soft relative to the target. A missile is considered hard if the average crushing or buckling limit stress of the missile is greater than the average contact stress required to cause local crushing and penetration of the target. Missiles not meeting the above condition are considered soft missiles. The timber missile is considered soft and the steel pipe missile is considered hard. For reinforced concrete targets, the formulas used to establish the missile depth of penetration (x) and scabbing thickness (ts) are based on the Modified National Defense Research Committee Formula (NDRC) (ASCE58) and the Army Corps of Engineers Formula (ACE) (ASCE58) respectively.

The modified NDRC formulas for penetration is given by:

$$x = \sqrt{4KNWd\left(\frac{V}{1{,}000d}\right)^{1.80}} \quad \text{, for } \frac{x}{d} \le 2.0 \qquad \text{(Eq. 3.3-5)}$$

$$x = \left\{\left[KNW\left(\frac{V}{1000d}\right)^{1.80}\right] + d\right\} \quad \text{, for } \frac{x}{d} > 2.0 \qquad \text{(Eq. 3.3-6)}$$

The ACE Formula for scabbing is given by:

$$\frac{t_s}{d} = 2.12 + 1.36\frac{x}{d}\text{, for } 0.65 \le \frac{x}{d} \le 11.75 \qquad \text{(Eq. 3.3-7)}$$

The variables used in the NDRC and ACE formulas are defined below:

N = missile shape factor which has a value of 0.72 for flat-nosed missiles

d = $\left(\frac{4A_c}{\pi}\right)^{\frac{1}{2}}$ = effective missile diameter, in.

W = missile weight, lbs.

K = $\frac{180}{\sqrt{f'c}}$

f'_c = ultimate compressive strength of concrete, psi

A_c = missile contact area, sq in.

x = missile depth of penetration, in.

t_s = scabbing threshold thickness, in.

V = striking velocity of missile, fps

Per Section C.7.2.1 of ACI 349, the concrete thickness required to resist hard missiles shall be at least 1.2 times the scabbing thickness, t_s. References indicate that the soft missiles will cause no local penetration with the exception of possible punching shear failure. Punching shear is calculated and checked against the requirements of ACI 349, Section C.7.2.3.

For steel targets, the formula used to establish the perforation thickness is the Ballistic Research Laboratory (BRL) Formula (ASCE 58).

The BRL Formula to determine the target thickness is given by:

$$\left(\frac{e}{d}\right)^{1.5} = \frac{DV^2}{1{,}120{,}000K_s^2} \qquad \text{(Eq. 3.3-8)}$$

Where:

K_s = Steel penetrability constant depending upon the grade of the steel target, usually taken as 1.0.

$D = \frac{W}{d^3}$ = missile caliber density, lbs/in^3

$d = \left(\frac{4A_c}{\pi}\right)^{\frac{1}{2}}$ = effective missile diameter, in.

A_c = missile contact area, sq in.

e = perforation thickness, in.

V = striking velocity of missile, fps

W = missile weight, lbs

References indicate that the recommended steel target thickness is 1.25 times the perforation thickness (ASCE, 50, p. 346).

C. Overall Structural Response

In addition to local impact effects, the barriers and building structures are designed to resist the overall effects of missile impact. The response of the structure to missile impact depends largely on the location of impact, the dynamic properties of the structure (target), and the kinetic energy of the missile.

3.3.2.2.4 Water Level

Based on setting the grade level of the facility above the maximum foreseeable flood level, the only potential flooding of the facility results from local intense rainfall. Protection against flooding is provided by establishing the facility floor level at 0.15 m (0.5 ft) above the finished grade elevation adjacent to facility buildings with a finished site topography that will direct rain water away from the facility buildings. In addition, in order to prevent general site flooding from the contributory areas above the site, an intercept trench will be constructed uphill of the buildings. Based on these design features, the probability of the water level reaching the building finished floor is negligible. Section 3.2, provides in detail the effects of flood from local intense precipitation. Additionally, for roof access doors, the door sill elevation shall be at least 6" above the top of the built up roofing.

3.3.2.2.5 Seismic Loadings

3.3.2.2.5.1 Building Code Earthquake

All buildings and structures, including such items as equipment supports, are designed to withstand the earthquake loads defined in Section 1615 of the International Building Code. Every structure is designed to resist the total lateral seismic forces acting nonconcurrently in the direction of each of the main axes of the structure.

Although much of the facility is of a critical nature and the additional safety factor for developing seismic forces on these structures is provided by using the occurrence probability of 10^{-4}, all buildings will be taken as Seismic Use Group II structures per International Building Code Section 1616.2.

Mapped spectral accelerations for short term (i.e. S_s for 0.2 second period) and long term (S1 for 1.0 second period) have been obtained from Figures 1615(1) and 1615(2) of the International Building Code. Associated Site Coefficients have been obtained from International Building Code Tables 1615.1.2(1) and 1615.1.2(2).

The seismic design base shear in a given direction is determined by the following correlation based on Equation 16-56 of the International Building Code:

$$V = \frac{1.2 S_{DS}}{R} \cdot W \qquad \text{(Eq.3.3 – 9)}$$

$$S_{DS} = \frac{2}{3} \cdot S_{MS} \qquad \text{(Eq.3.3 – 10)}$$

$$S_{MS} = F_a \cdot S_s \qquad \text{(Eq.3.3 – 11)}$$

Where:

V = Lateral force or base shear

S_{DS} = Design elastic response acceleration for short period, equal to (2/3) S_{MS} International Building Code Equation 16-40

S_{MS} = Maximum considered earthquake spectral response accelerations for short period per International Building Code Section 1615.1.2

F_a = Short-period site coefficient per International Building Code Table 1615.1.2(1)

W = Effective seismic weight of structure

R = Response modification factor per International Building Code Table 1617.6.2

3.3.2.2.5.2 Design Basis Earthquake

The Design Basis Earthquake (DBE) for the NEF site has a peak horizontal acceleration of 0.161g and peak vertical acceleration of 0.1074g based on ASCE 43-05. The design spectra associated with these values are based on 10% damping in accordance with Limit State C of ASCE 43-05. Soil amplification factors are based on Soil Class C. This assumption will be verified during final design. Refer to Section 3.2, for a detailed discussion of the geology and seismicity of the region used in determining the DBE.

3.3.2.2.6 Precipitation Loadings

3.3.2.2.6.1 Snow Loadings

Extreme snow loadings on roofs of safety significant structures are based on a design basis ground snow load of 32 lb/ft^2. The design basis ground snow load for safety significant structures is enveloped by the general 40 psf roof live load with the exception of drift areas. Drift areas (where load can exceed 40 psf) are evaluated when required for each structure. Quality Level 3 structure will as a minimum, meet the IBC requirements for design basis ground snow loading.

3.3.2.2.6.2 Rainfall Loadings

For all buildings, rainwater will be carried away from the roof surfaces using rain gutters and intermittent down spouts along the building perimeter. The roofs are provided with adequate slope to prevent localized ponding. The rain loading for Safety Significant Structures are enveloped by the general 40 psf roof live load. Quality Level 3 structures will as a minimum, meet the IBC requirements for rain loading.

3.3.2.2.7 Process and Equipment Derived Loadings

The various buildings and structures are designed to support the equipment, piping, duct and tray associated with them. Dead loads, fluid loads, impact loads, seismic loads and other

dynamic loads are accounted for in the design. In addition to the buildings, individual supports are designed to withstand these same types of loads.

Loads from piping, HVAC, and cable tray, conduit and unknown equipment shall be estimated based on the specific plant layout to the greatest extent possible, and also based on expected usage of the area. For design development purposes, these loads shall not be less than the following values in general areas (uniformly distributed over entire floor or wall):

- 10 psf for roofs and floor slabs
- 5psf for walls (loads perpendicular to wall)

For design development purposes, loads for design of the Process Services corridors in the SBM, and UF_6 Area utility corridors shall not be less than the following values (uniformly distributed over entire floor or wall):

- 20 psf for floor slabs
- 10 psf for walls (loads perpendicular to wall)

Individual supports for QA Level 3 commodities located in the vicinity of QA Level 1 equipment, such that failure of the support could result in an interaction with seismic designed QA Level 1 equipment, shall be designed to preclude unacceptable interaction.

Analyses that include estimated loads based on the above are verified as bounding upon completion of the final design prior to any IROFS performing their required function.

3.3.2.2.8 Combined Loadings for Structures

For all concrete structures, the load combinations using strength design are from IBC and ASCE 7. For all steel structures, the load combinations using allowable stress design are from IBC and ASCE 7. Safety significant structures comply with the additional load combinations listed in 3.3.2.2.8.3.A for concrete structures and 3.3.2.2.8.3.B for steel structures. Load combinations for components for all buildings are based on ASCE 7. Use of additional or alternate load combinations is acceptable so long as the equivalent load types are considered, and the alternate load combinations are deemed to be equivalent or more conservative than the load combinations listed in 3.3.2.2.8.3.Loads are considered to act in various load combinations as listed in this section. Results are checked for whatever combination produces the most unfavorable effects for the buildings, foundations or other structural components being considered.

All major loads encountered and/or postulated in a safety significant structure or component are listed in three categories described below.

3.3.2.2.8.1 Normal Loads

Normal loads are those loads encountered during normal facility operation. They include the following:

A. Dead (D)

Dead loads include gravitational load of structures, permanent equipment, piping, static liquid, long term stored materials, permanent partitions and any other permanent static load.

B. Live (L or LR)

Live loads include the weight of moveable objects such as personnel and equipment, temporarily stored materials, tools, moveable partitions, transporters, hoists and cranes. Design live loads, including impact loads, used are in accordance with Section 4.0 and Table 4-1 of ASCE 7.

C. Self-Straining (T)

Self-straining forces and effects arise from the restraint of a structural member from expansion or contraction due to temperature change, shrinkage, creep or differential settlement.

D. Pressure (F)

Lateral and vertical pressure of liquid or gases due to their containment within a structure.

E. Lateral Earth Pressure (H)

The lateral earth pressure acting on foundations, buried walls or retaining walls.

F. Environmental Loads

Environmental loads include the following:

1. Snow (S)

   Snow loads are discussed in Section 3.3.2.2.6, Precipitation Loadings.

2. Rainfall (R)

   Normal rainfall loads are discussed in Section 3.3.2.2.6.

3. Wind (W)

   Wind loads are discussed in Section 3.3.2.2.1, Wind Loadings.

4. Earthquake (Eo)

   Building code earthquake loads are discussed in Section 3.3.2.2.5, Seismic Loadings. The Operating Basis Earthquake, also denoted as Eo in ACI 349 is not applicable to this facility since no Operating Basis Earthquake has been defined for the project. However, all structures are designed for the normal Building Code earthquake and all safety significant buildings are designed to the Safe Shutdown Earthquake.

G. Process and Equipment Reactions (Ro)

Process and equipment derived loads are discussed in Section 3.3.2.2.7, Process and Equipment Derived Loadings.

H. Postulated Pipe Break Loads

As discussed in Section 3.3.2.2.3.1, pipe break loads are not postulated for this facility.

3.3.2.2.8.2 Extreme Environmental Loads

Extreme environmental loads are those loads that are credible but highly improbable. They include the following:

A. Design Basis Tornado (Wt)

The Design Basis Tornado loads are made up of 3 load components acting in various combinations. The load components are:

1. Tornado wind velocity pressure (Ww)

2. Tornado induced differential pressure (Wp)

3. Tornado generated missile load (Wm)

Items 1. and 2. are discussed in Section 3.3.2.2.2. Item 3. is discussed in Section 3.3.2.2.3.

The three load components can act in the following combinations as described in USNRC NUREG-0800.

a. $W_t = W_w$

b. $W_t = W_p$

c. $W_t = W_m$

d. $W_t = W_w + W_m$

e. $W_t = W_w + 0.5\ W_p$

f. $W_t = W_w + 0.5\ W_p + W_m$

B. Safe Shutdown Earthquake (Es)

Loads from the Safe Shutdown Earthquake (i.e., DBE) are discussed in Section 3.3.2.2.5.

C. Design Basis Flood (DBFL)

Loads from the Design Basis Flood are discussed in Section 3.3.2.2.4.

D. Truck and Gas Pipeline Hazards

Explosion hazards from trucks (e.g., propane trucks) on highways near the NEF site are described in Section 3.2.1.2.1. Explosion hazards from gas pipelines near the NEF site are described in Section 3.2.2.4, Industrial Areas. During detailed design of specific buildings and areas, pressure loads due to postulated truck and pipeline explosions will be considered. The pressure loads will be developed in accordance with the underlying assumptions used in the explosion hazard assessments described in Sections 3.2.1.2.1 and 3.2.2.4. These buildings and areas include: Separations Building Modules (UF_6 Handling Area, Process Services Corridor and Cascade Halls), and Cylinder Receipt and Dispatch Building. Section 3.3.1, Buildings and Major Components, describes these buildings.

3.3.2.2.8.3 Combined Load Applications

A. In addition to complying with the load combinations required by the building code, the following additional load combinations are applicable for safety significant concrete structures combining factored loads using Strength Design. Load combinations related to pipe breaks and the operating basis earthquake have been eliminated as discussed in Section 3.3.2.2.8.1.

1. $U = 1.4D + 1.4F + 1.7(L_R \text{ or } S \text{ or } R) + 1.7H + 1.7R_o$

2. $U = 1.4D + 1.4F + 1.7L + 1.7H + 1.7W + 1.7Ro$

3. $U = 1.05D + 1.05F + 1.3L + 1.3H + 1.05T + 1.3Ro$

4. $U = 1.05D + 1.05F + 1.3L + 1.3H + 1.3W + 1.05T + 1.3Ro$

For extreme environmental conditions the following load combinations are satisfied:

5. $U = D + F + L + H + T + R_o + E_s$

6. $U = D + F + L + H + T + R_o + W_t$

7. U - Used for concrete structures, U is the required strength to resist factored loads or related internal moments, shears and forces, based on methods described in ACI 349.

B. In addition to complying with the load combinations required by the building code, the following additional load combinations are applicable for safety significant steel structures combining nominal loads using Allowable Stress Design.

1. $S = D$

2. S = D + L + F + H + T + (L_r or S or R)
3. S = D + (W or $0.7E_o$) + L + (L_r or S or R)
4. S = 0.6D + W + H
5. S = 0.6D + $0.7E_o$ + H

For extreme environmental conditions the following load combinations are satisfied:

6. S = 0.625(D + L + T + Ro + Es)
7. S = 0.625(D + L + T + Ro + Wt)
8. S - Used for structural steel, S is the required section strength based on the elastic design methods and the allowable stresses defined in the AISC Manual of Steel Construction-Allowable Stress Design and AISC N690.

Load Combinations and Requirements for Foundations

All foundations are checked against sliding and overturning due to earthquake, wind, Design Basis Earthquake and Design Basis Tornado in accordance with the following:

Minimum Factors of Safety

Load Combination	Overturning	Sliding
D + H + E_o	1.5	1.5
D + H + W	1.5	1.5
D + H + E_s	1.1	1.1
D + H + W_t	1.1	1.1

The allowable stresses cannot exceed 0.7 times the ultimate tensile strength ($0.7F_u$) in axial tension nor 0.7 times the ultimate tensile strength times the ratio of plastic section modulus to elastic section modulus ($0.7F_u$ Z/S).

3.3.2.3 Foundations

Foundations are shallow concrete spread strip footings. Allowable bearing pressures can be found in Table 5.8-2 and Figures 5.8-1 and 5.8-2 of the Geotechnical Report (NTS Report 114489-G-01, Rev. 00), and these values are based on the assumptions in Section 5.8 of the Geotechnical Report.

3.3.2.4 UF_6 Process Systems Piping and Components

For all SBMs, UF_6 process system piping and component that are required to maintain pressure boundary integrity after a seismic event will be designed to withstand the Design Basis Earthquake (DBE). The DBE meets the requirements for Seismic Design Category 5 (SDC-5), as required by ASCE 43-05. The seismic uniform hazard response spectra associated with the DBE is described in Section 3.2.6.4.3 and 3.2.6.5 of the Integrated Safety Analysis (ISA) Summary and will be finalized in accordance with ASCE 43-05 as part of the detailed design.

Equipment mounted on grade level, floating floor slabs in the SBM will be designed for the DBE ground motion. Equipment and systems that are mounted at higher elevations of the SBM building where amplification will occur must be evaluated for the loads associated with the amplified seismic ground motions. Dynamic amplification of the building is accounted for using In-structure Spectra (ISRS). The ISRS of the SBM is determined using the methods specified in ASCE 43-05 and ASCE 7-02.

Depending on the actual seismic pressure boundary, potential design and analysis requirements for qualification of the UF_6 process systems piping and components are summarized as follows:

- The UF_6 piping shall meet the requirements of ASME B31.3, Process Piping, with the additional requirements of AME B31.3, Chapter VII, "Piping for Category M Fluid Service."

- ASME B31.3 Paragraph 301.52 required that the piping be designed for earthquake-induced horizontal and vertical loads. The allowable stresses for the DBE are given in ASME B31.3 Paragraph 302.3.6, "Limits of Calculated Stress due to Occasional Loads," which permits an increase over the basic allowable stresses of 1.33 for occasional loads.

- Components and vessels in the UF_6 piping systems are also required to maintain pressure boundary integrity after a DBE event. ASME B31.3, Chapter IV, provides the requirement for design of piping components and demonstration of the seismic adequacy of components used in UF_6 piping systems. Acceptable methods include, but are not limited to:

    - Extensive, successful service experience under comparable conditions.
    - Detailed Stress analysis with results evaluated as described in ASME Boiler and Pressure Vessel Code, Section VII, Division 2, appendix 4, Article 4-1.
    - Pressure vessels may also be designed in accordance with ASME Boiler and Pressure Vessel Code, Section VIII, Unfired Pressure Vessels, and analyzed for all loading conditions.

- The UF_6 cylinders that meet the requirements of DOT 7A, Type A are considered to be acceptable for seismic loading.

- Pipe joints shall meet the requirements of ASME B31.3, Chapter II, Part 4, "Fluid Service Requirements for Piping Joints." Piping flanges shall meet the requirements of ASME B31.3 Part 3. This approach is considered sufficient to show that the flanged connection is leak-tight before and after a DBE. However, it does not necessarily ensure the connection is leak-tight during the DBE. Potential loss of integrity during the DBE is considered acceptable because loss of joint integrity during the DBE will be temporary and because the UF_6 systems operate under a vacuum; any temporary leakage at a flanged connection will be in-leakage.

- The seismic design criteria for all structural elements of systems and equipment that must maintain pressure boundary integrity after a DBE including component supports, equipment anchorages and steel support structures are in accordance with ASCE 43-05. The allowable stresses for the seismic loading combinations shall meet the requirement for extreme environmental loads.

- The centrifuges are supported by Floor Mounted Elements (flomels). The seismic qualification of the flomels will be performed by either analysis or testing.

- Seismic qualification of the centrifuges requires that the centrifuge maintain pressure tight integrity and remain in the upright position during the seismic event.

3.3.3 References

Edition of Codes, Standards, NRC Documents, etc that are not listed below are given in Table 3.0-1.

CFR, 2003. Title 10, Code of Federal Regulations, Section 70.64, Requirements for new facilities or new processes at existing facilities, 2003.

NRC, 1982. Atmospheric Dispersion Models for Potential Accident Consequence Assessments at Nuclear Power Plants, Regulatory Guide 1.145, Revision 1, U.S. Nuclear Regulatory Commission, 1982.

NTS Report No. 114489-G-01, Revision 00. Geotechnical Report for the National Enrichment Facility in Lea County, New Mexico, Prepared by Nuclear Technology Solutions, LLC, Cherry Hill, NJ, November 10, 2005.

PCI, 1999. Precast Concrete Institute Design Handbook: Precast and Prestressed Concrete, Fifth Edition, MNL-120-99, Precast Concrete Institute, 1999.

UBC, 1997. Uniform Building Code, International Conference of Building Officials, ICBO, 1997.

3.3.4 Section 3.3 Tables

Table 3.3-1 Distances To Site Boundary and To Restricted Area Boundary and Wind Frequencies

Compass Direction from Facility	Distance from Facility to Site Boundary (meters)	(feet)	Distance from Facility Building Complex to Restricted Area Boundary (meters)	(feet)	Distance from UBC Storage Pad to Restricted Area Boundary (meters)	(feet)	Frequency of Wind (%)
S	417	1368	26.4	87	81.6	268	5.66
SSW	417	1368	26.4	87	-	-	3.98
SW	422	1384	28.8	94	-	-	4.91
WSW	503	1650	148.8	488	-	-	4.87
W	769	2522	168.0	551	33.6	110	6.29
WNW	1071	3513	168.0	551	-	-	5.52
NW	1072	3516	182.4	598	-	-	7.52
NNW	995	3264	93.6	307	-	-	10.80
N	995	3264	93.6	307	28.8	94	20.40
NNE	754	2473	93.6	307	-	-	7.35
NE	581	1906	100.8	331	-	-	5.46
ENE	540	1771	72.0	236	-	-	4.68
E	540	1771	57.6	189	33.6	110	4.45
ESE	540	1771	33.6	110	-	-	2.42
SE	487	1597	28.8	94	-	-	2.69
SSE	417	1368	26.4	87	-	-	3.04

3.3.5 Section 3.3 Figures

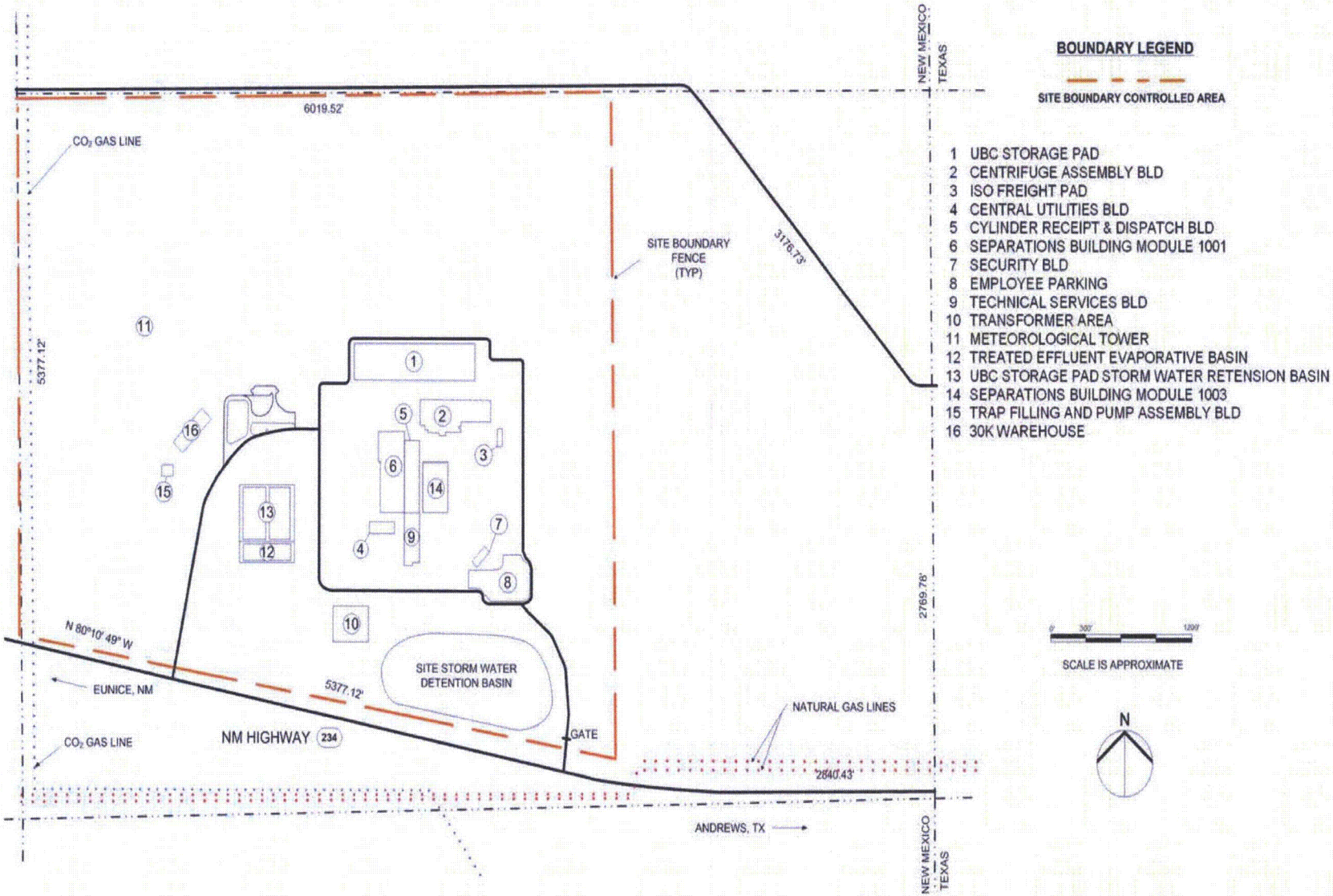

Figure 3.3-1 Facility Buildings and Areas

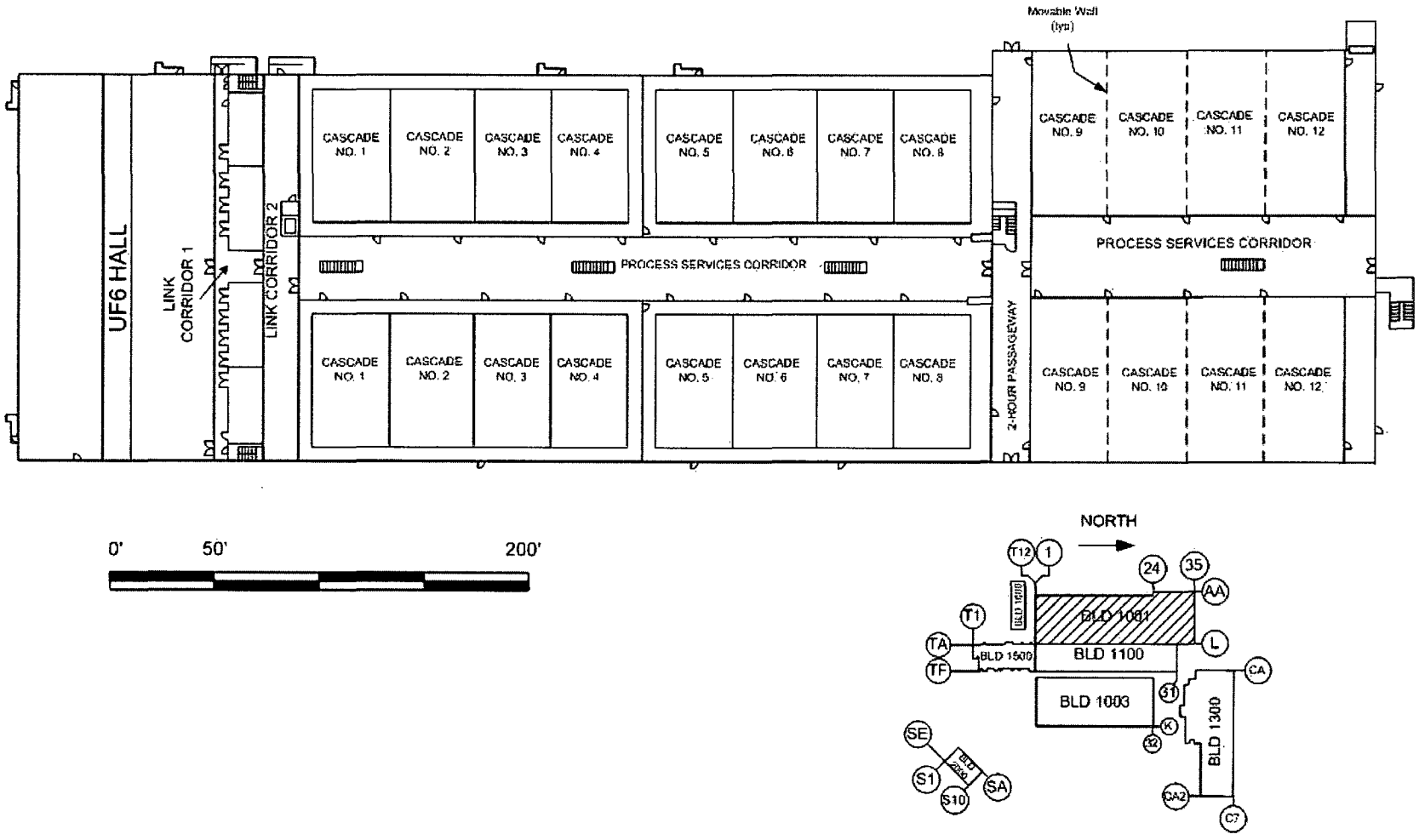

Figure 3.3-2 Separations Building Module 1001 First Floor

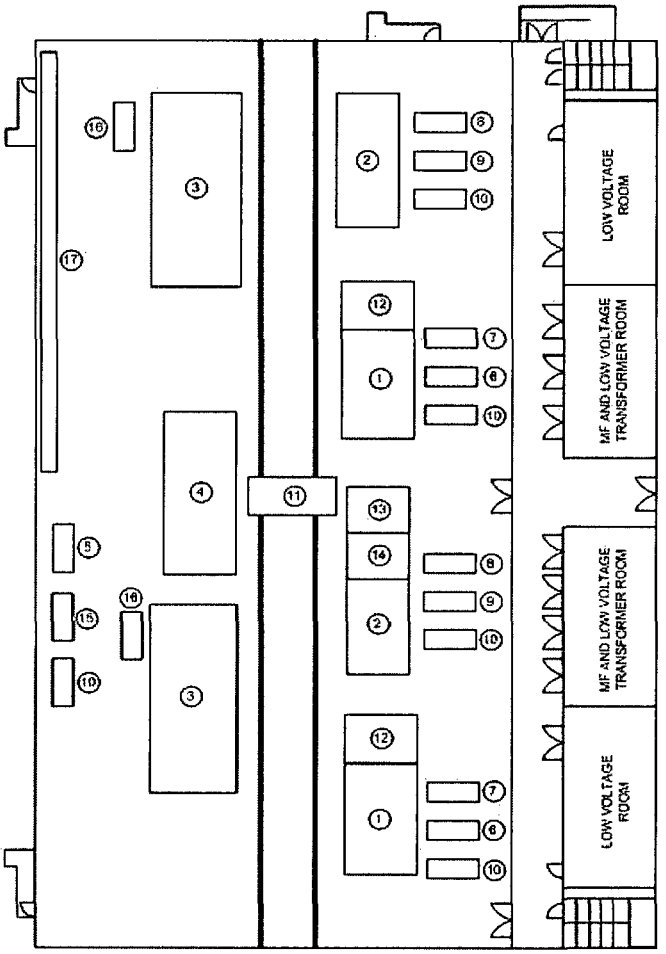

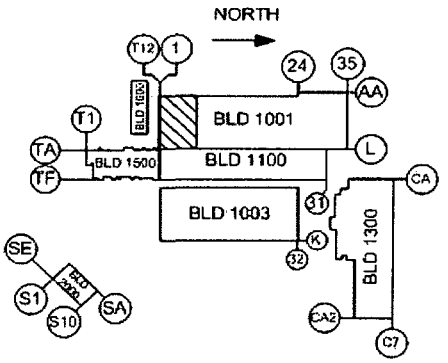

1 SOLID FEED STATIONS
2 PRODUCT STATIONS
3 TAILS STATIONS
4 AUTOCLAVES
5 DONOR RECEIVER VACUUM PUMP TRAP SET
6 FEED PURIFICATION COLD TRAP
7 FEED PURIFICATION VACUUM PUMP TRAP SET
8 PRODUCT VACUUM PUMP TRAP SET
9 PRODUCT VENT COLD TRAP
10 COLD TRAP HEATER/CHILLER SET
11 RAIL TRANSPORTER
12 FEED PURIFICATION STATIONS
13 DONOR STATIONS
14 RECEIVER STATIONS
15 DONOR RECEIVER COLD TRAP
16 TAILS VACUUM PUMP TRAP SET
17 PUMPED EXTRACT GEVS

Figure 3.3-3 Separations Building Module 1001 UF_6 Handling Area Equipment Locations

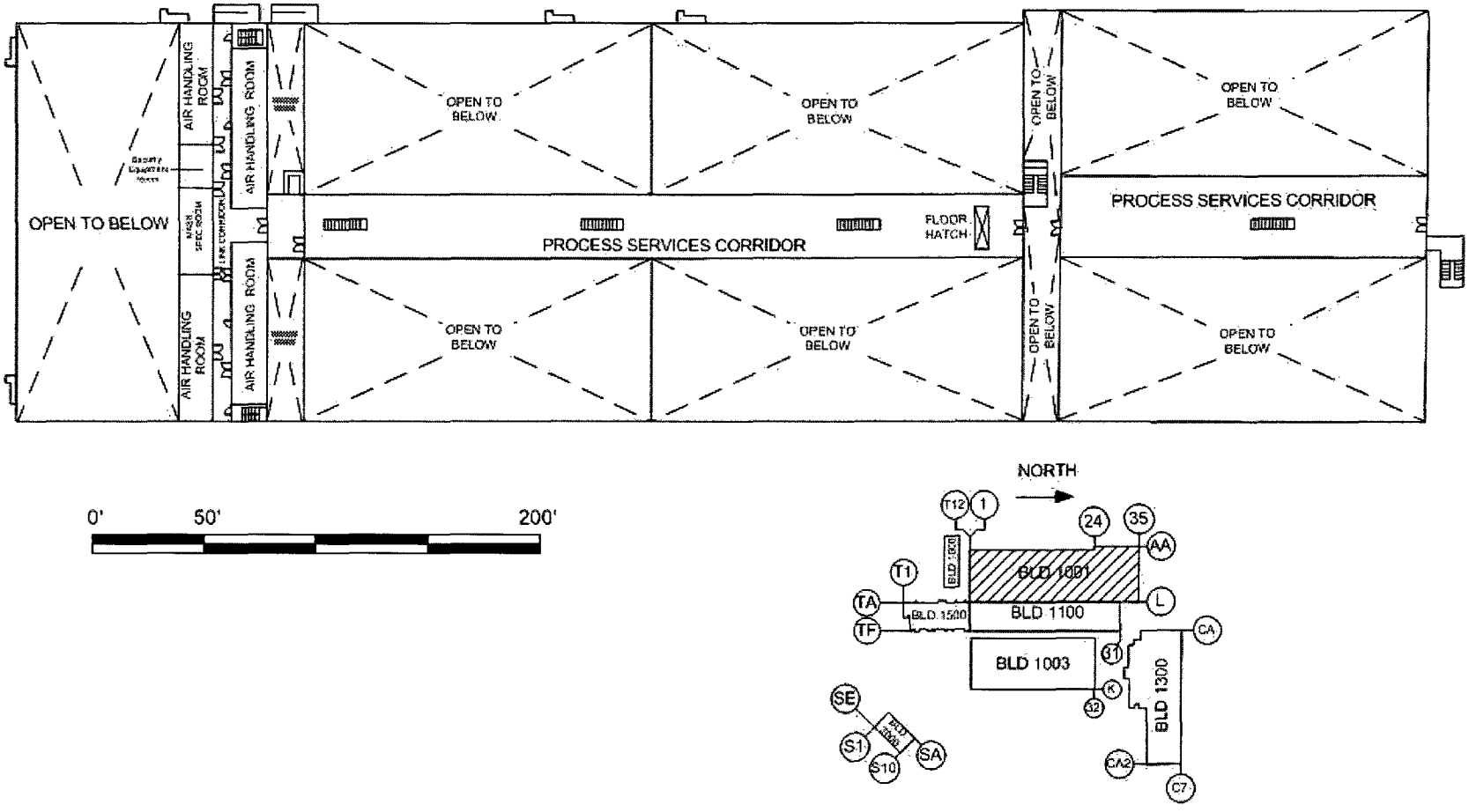

Figure 3.3-4 Separations Building Module 1001 Second Floor

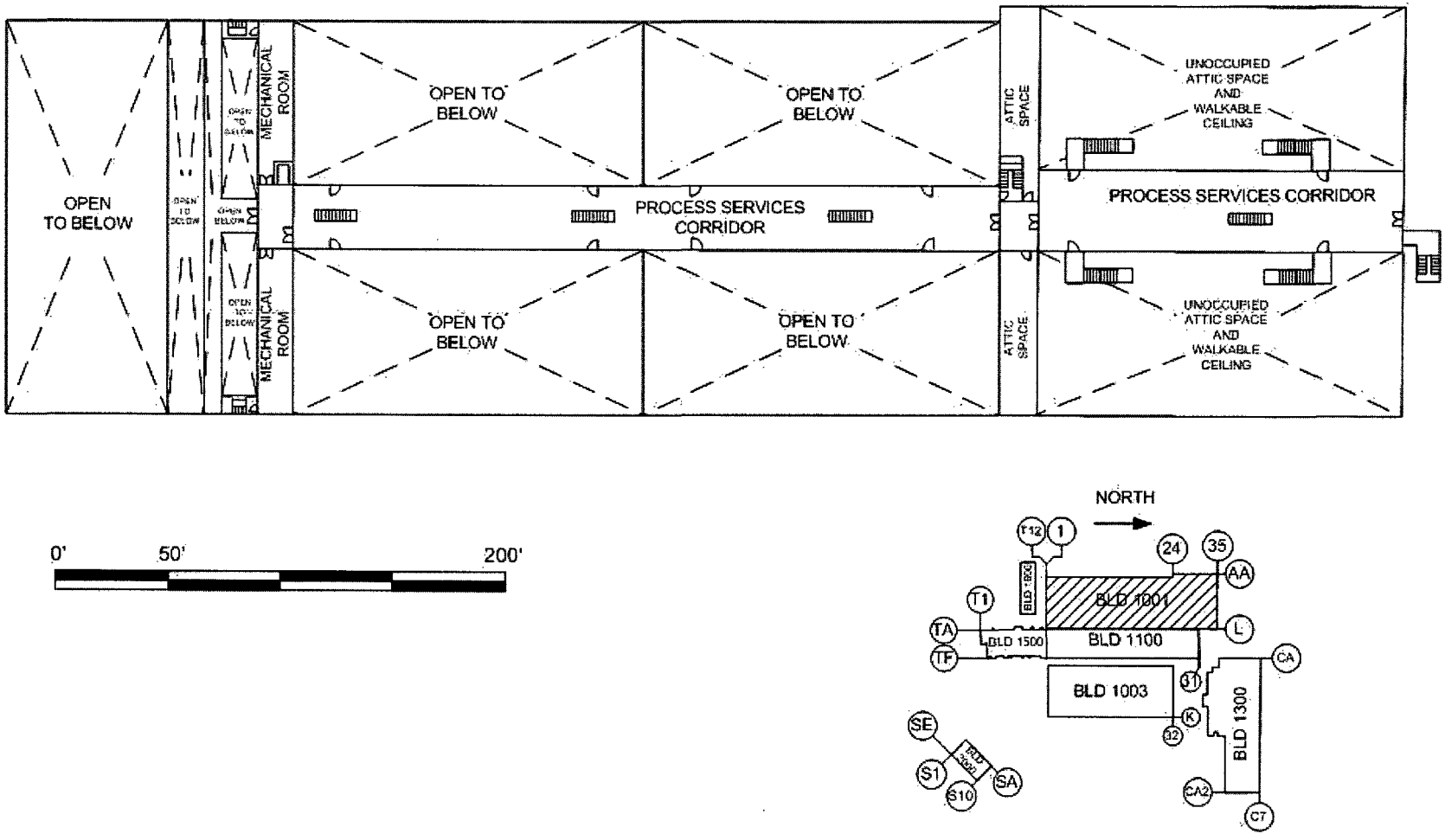

Figure 3.3-5 Separations Building Module 1001 Third Floor

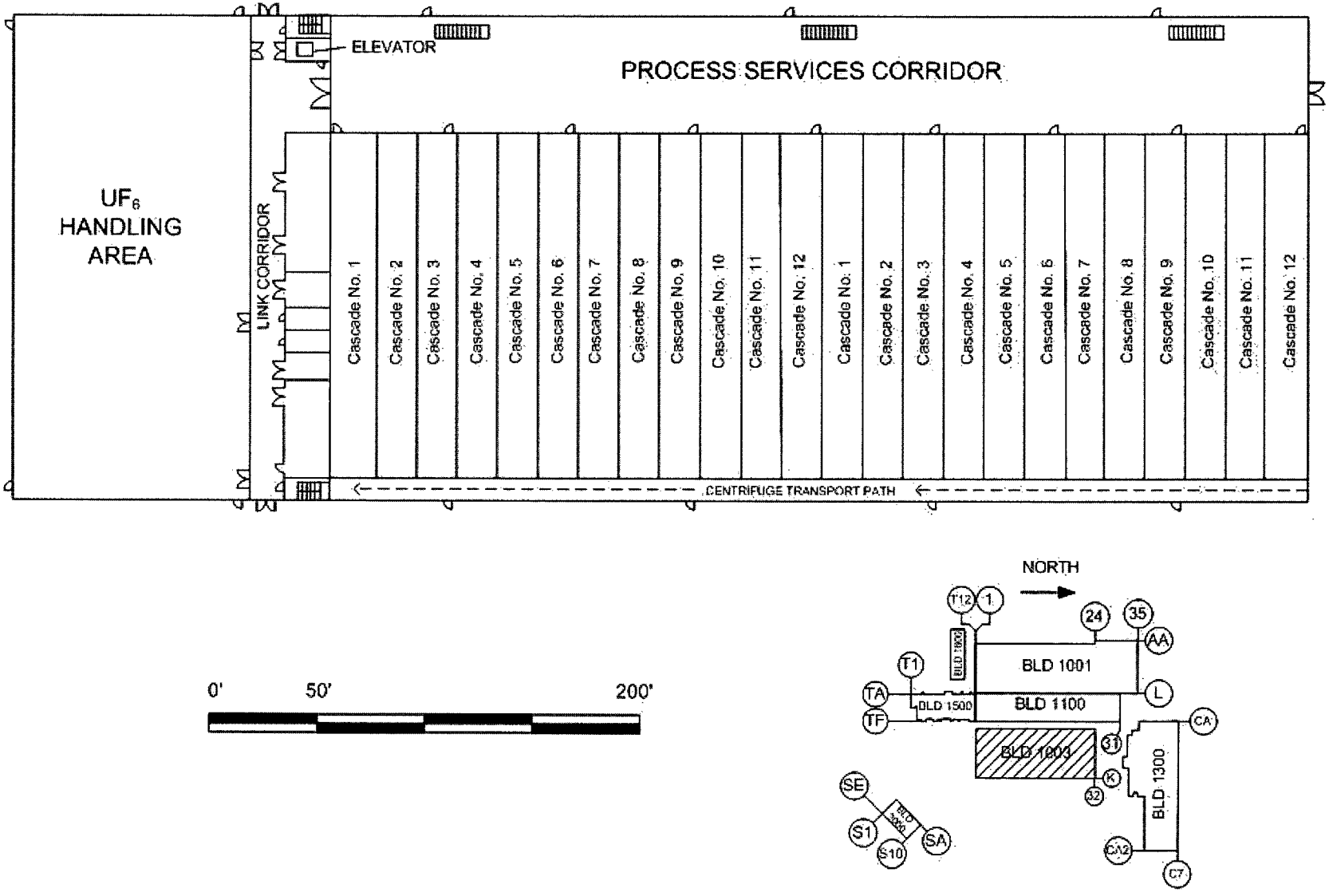

Figure 3.3-6 Separations Building Module 1003 First Floor

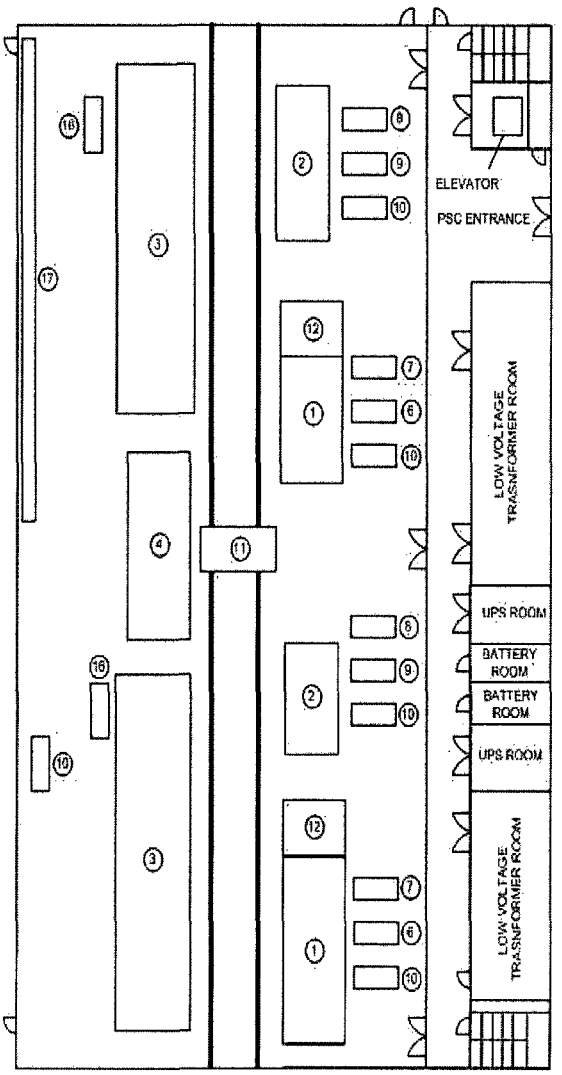

1 SOLID FEED STATIONS
2 PRODUCT STATIONS
3 TAILS STATIONS
4 AUTOCLAVES
6 FEED PURIFICATION COLD TRAP
7 FEED PURIFICATION VACUUM PUMP TRAP SET
8 PRODUCT VACUUM PUMP TRAP SET
9 PRODUCT VENT COLD TRAP
10 COLD TRAP HEATER/CHILLER SET
11 RAIL TRANSPORTER
12 FEED PURIFICATION STATIONS
16 TAILS VACUUM PUMP TRAP SET
17 PUMPED EXTRACT GEVS

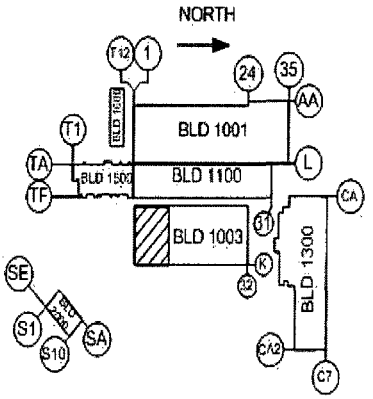

Figure 3.3-7 Separations Building Module 1003 UF_6 Handling Area Equipment Locations

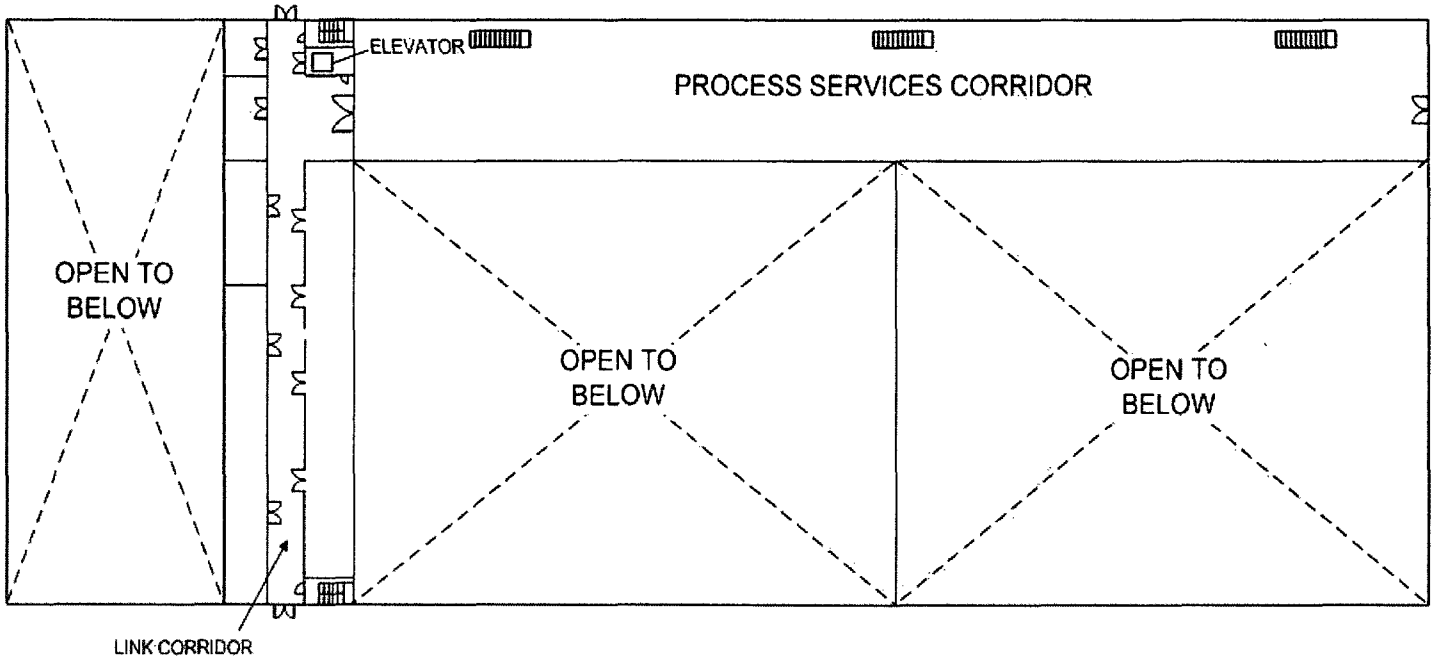

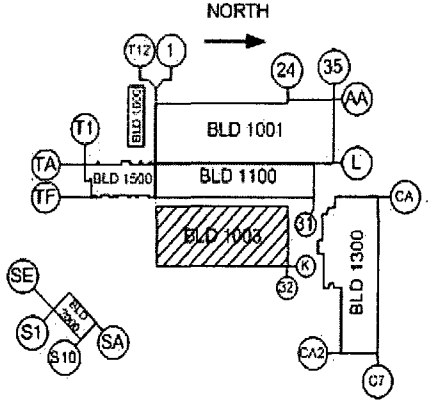

Figure 3.3-8 Separations Building Module 1003 Second Floor

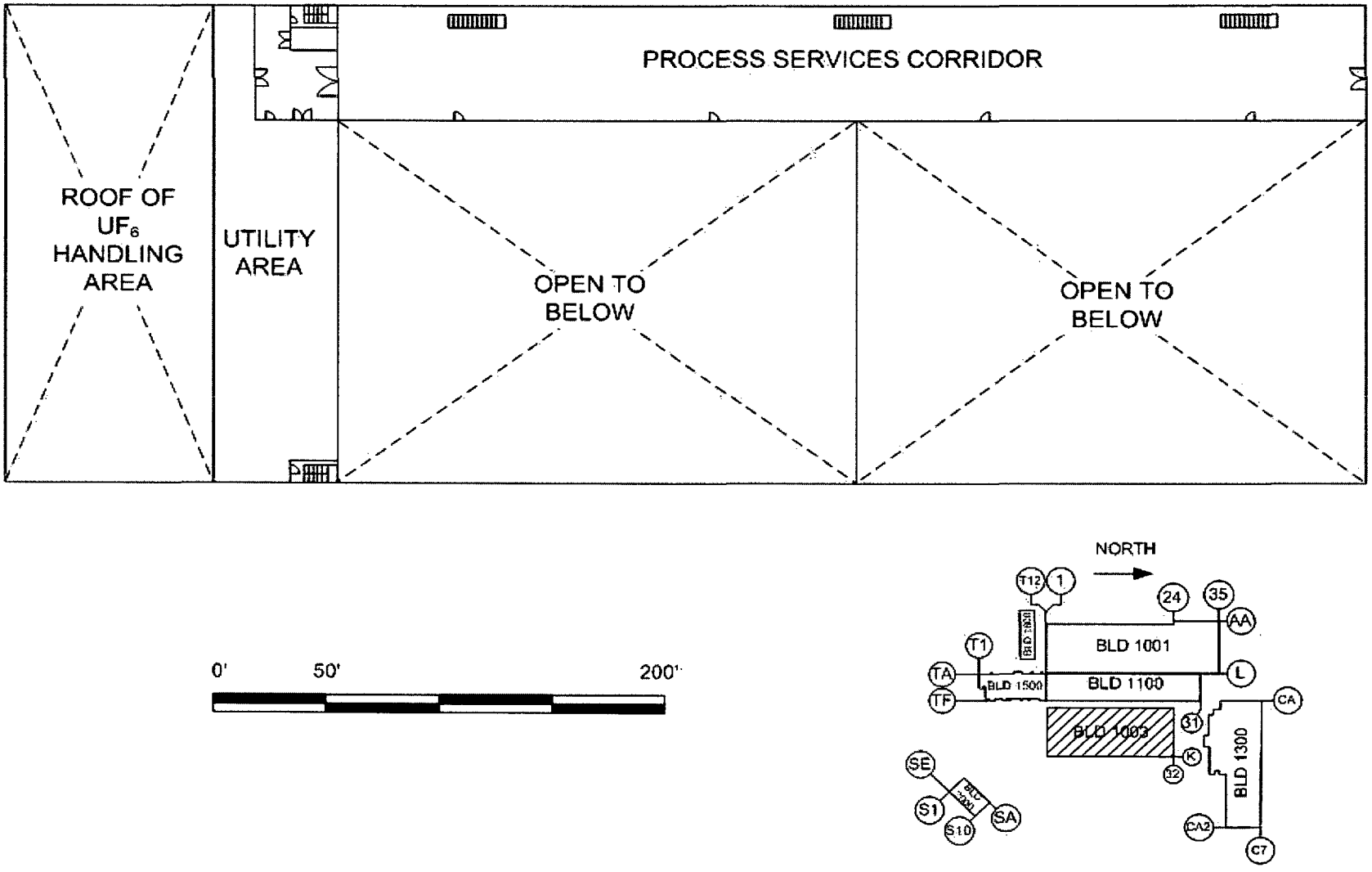

Figure 3.3-9 Separations Building Module 1003 Third Floor

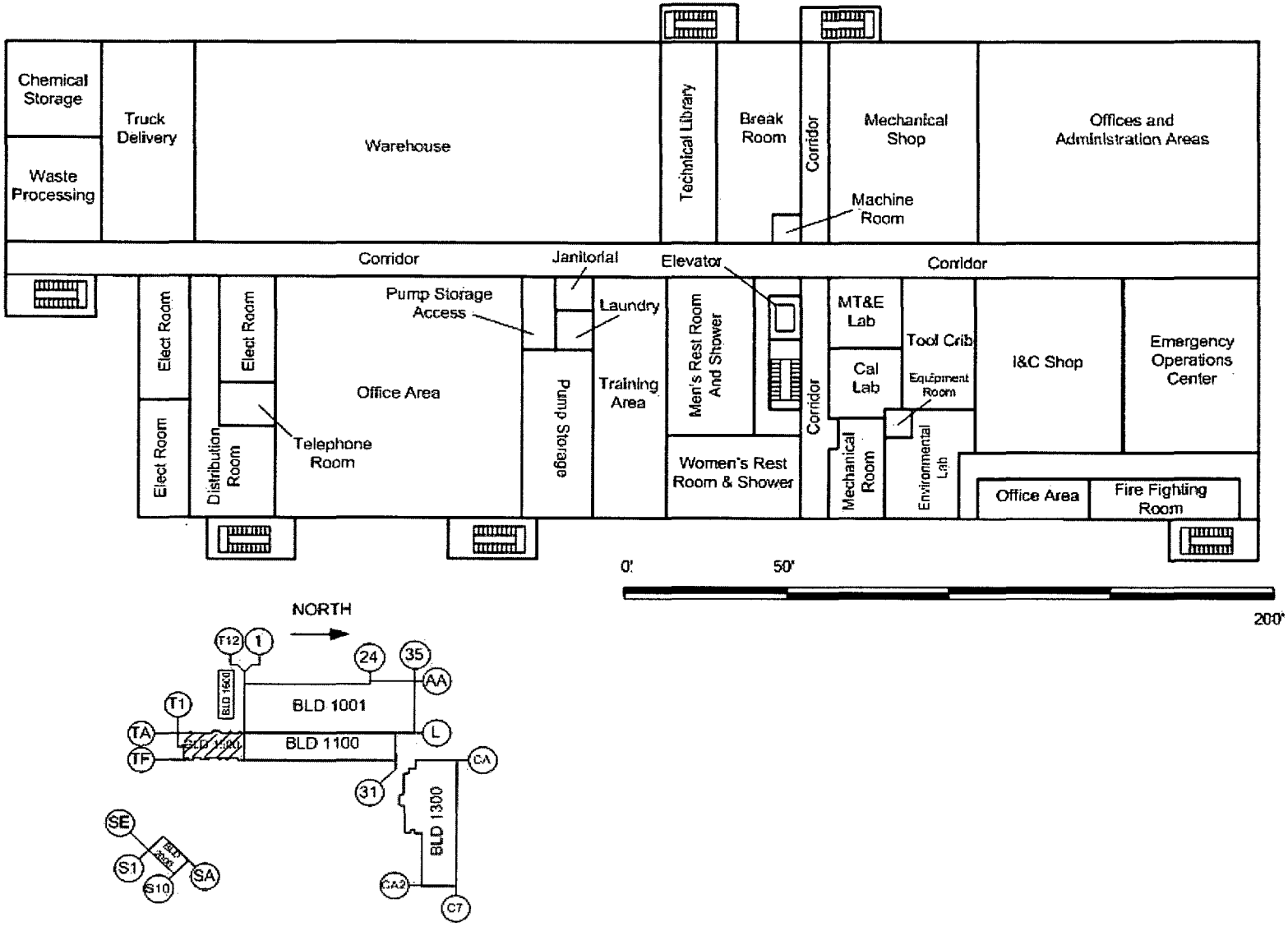

Figure 3.3-10 Technical Services Building First Floor

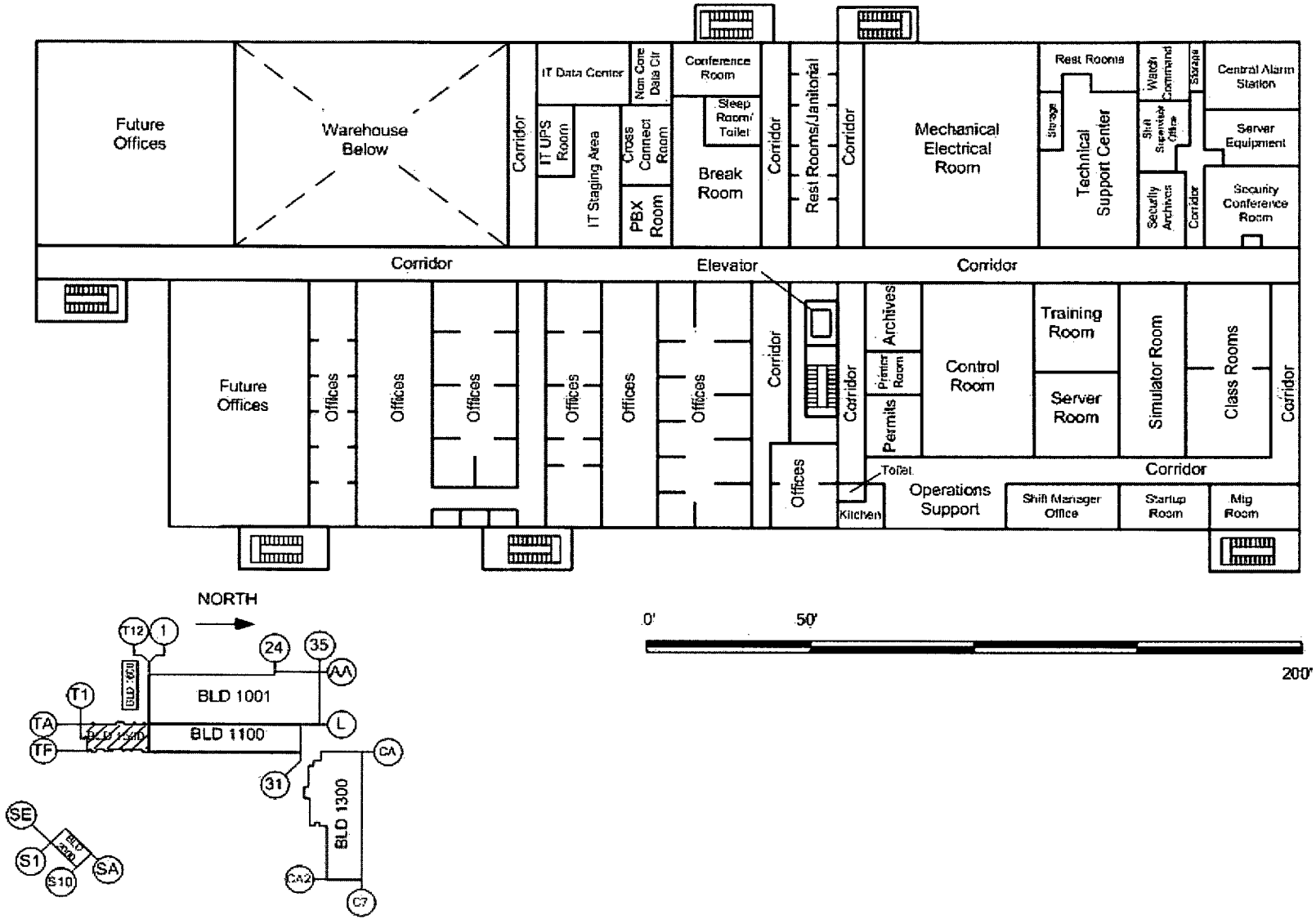

Figure 3.3-11 Technical Services Building Second Floor

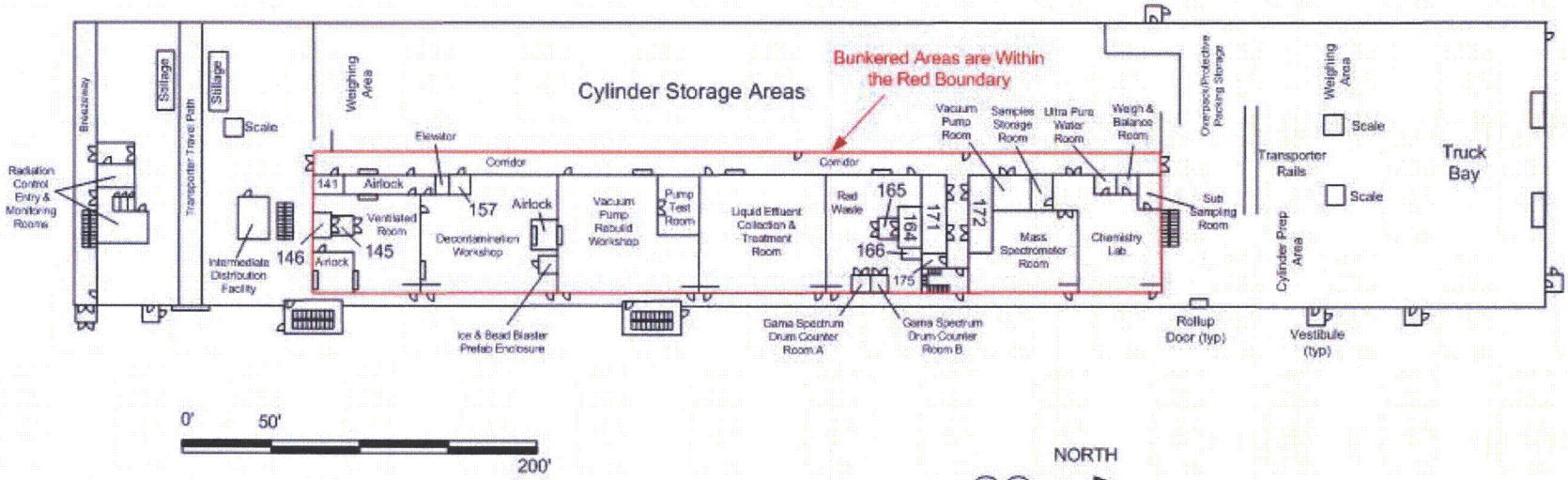

Room No.	Description
141	Personnel Decontamination Room
145	Cold Trap and Filter Unit Enclosure
146	Trap Emptying and Drum Tipper Enclosure
157	Elevator Equipment Room
164	Drum Repackaging Enclosure
165	Whole Body Monitor Enclosure
166	Radioactive Source Storage Enclosure
171	Electrical Equipment Room A
172	Electrical Equipment Room B
175	Electrical and Mechanical Chase

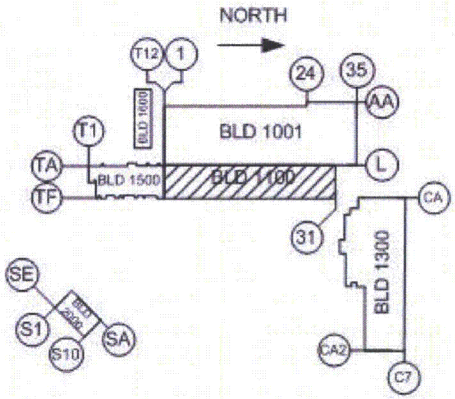

Figure 3.3-12 Cylinder Receipt and Dispatch Building First Floor

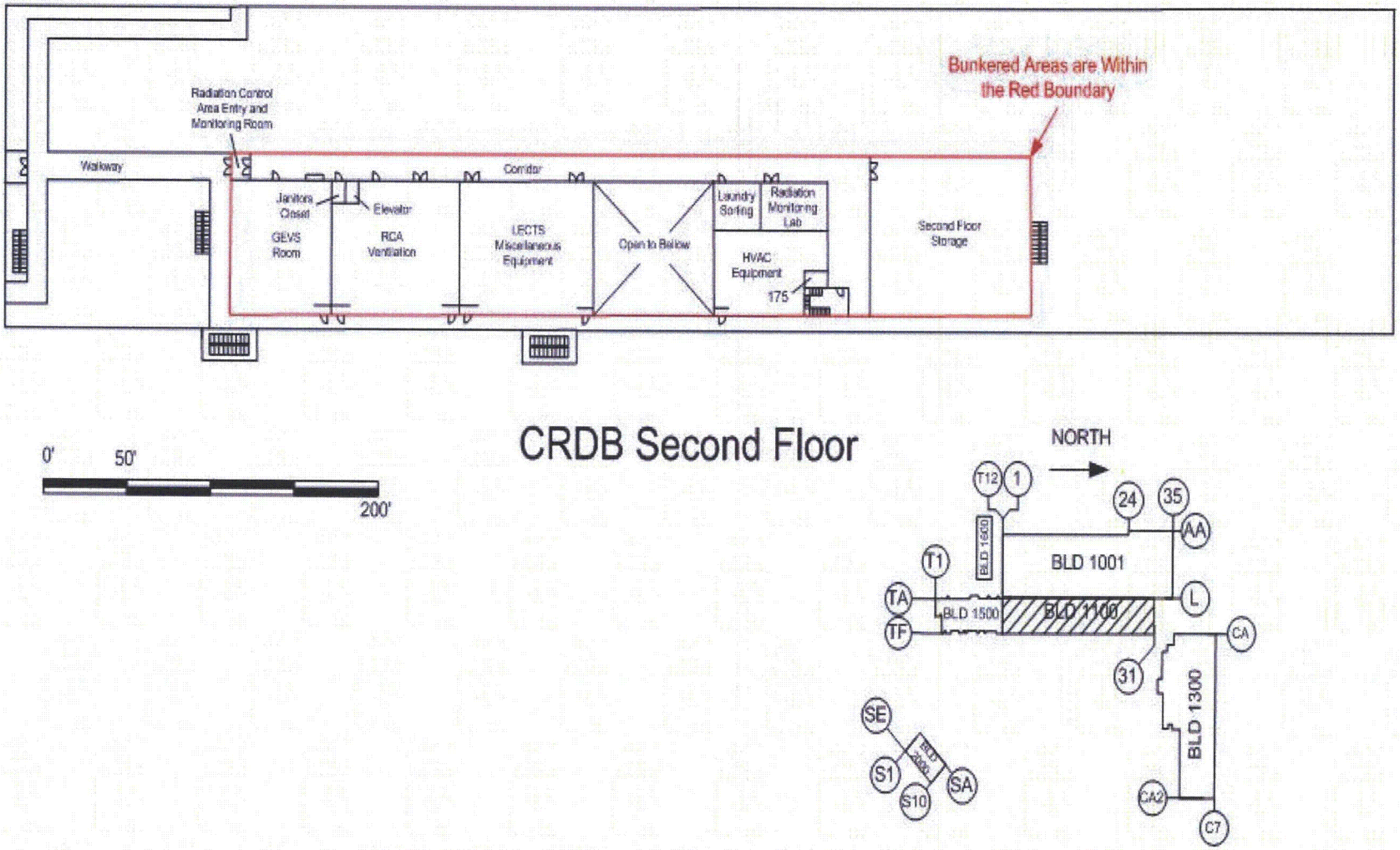

Figure 3.3-13 Cylinder Receipt and Dispatch Building Second Floor

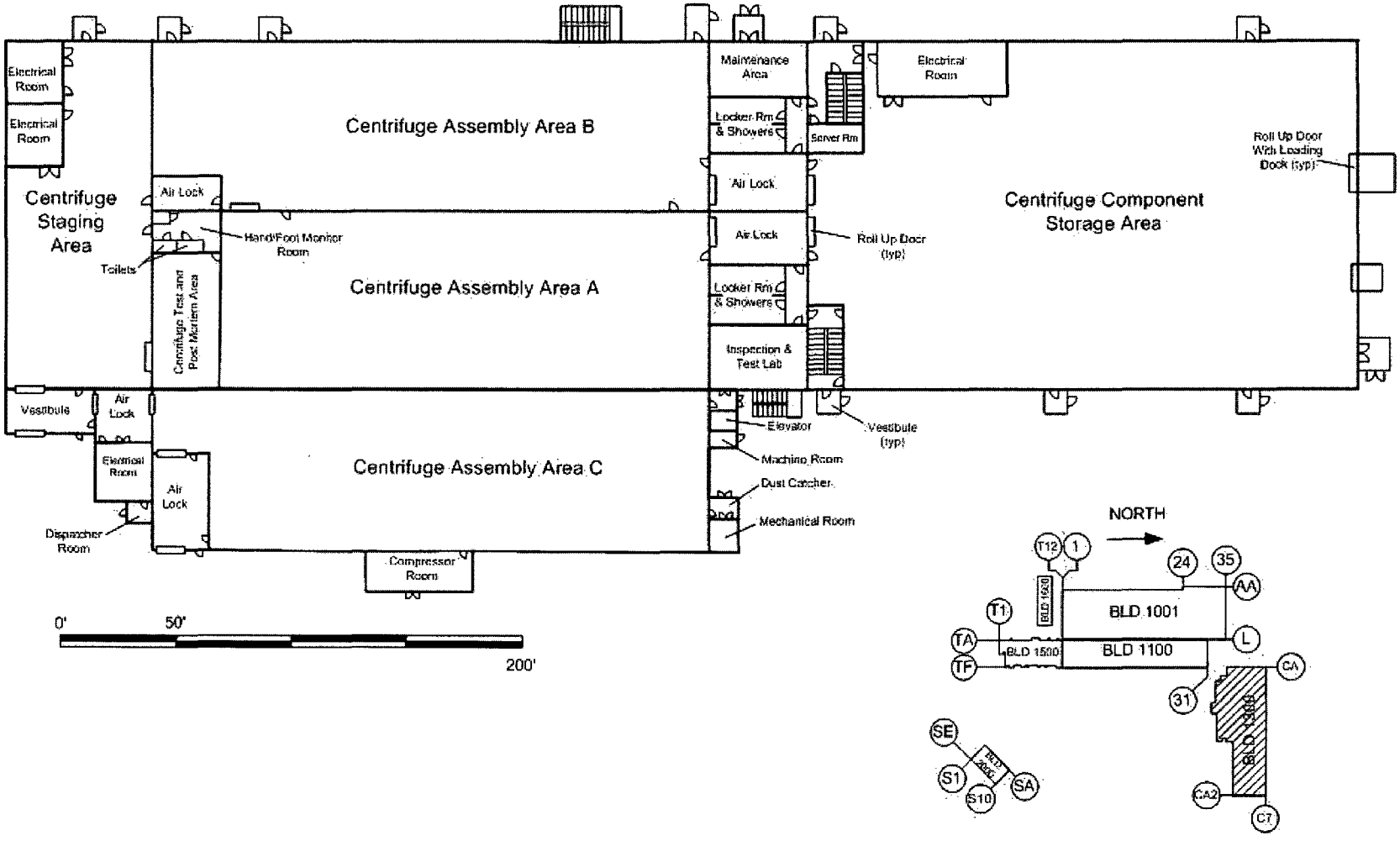

Figure 3.3-14 Centrifuge Assembly Building First Floor

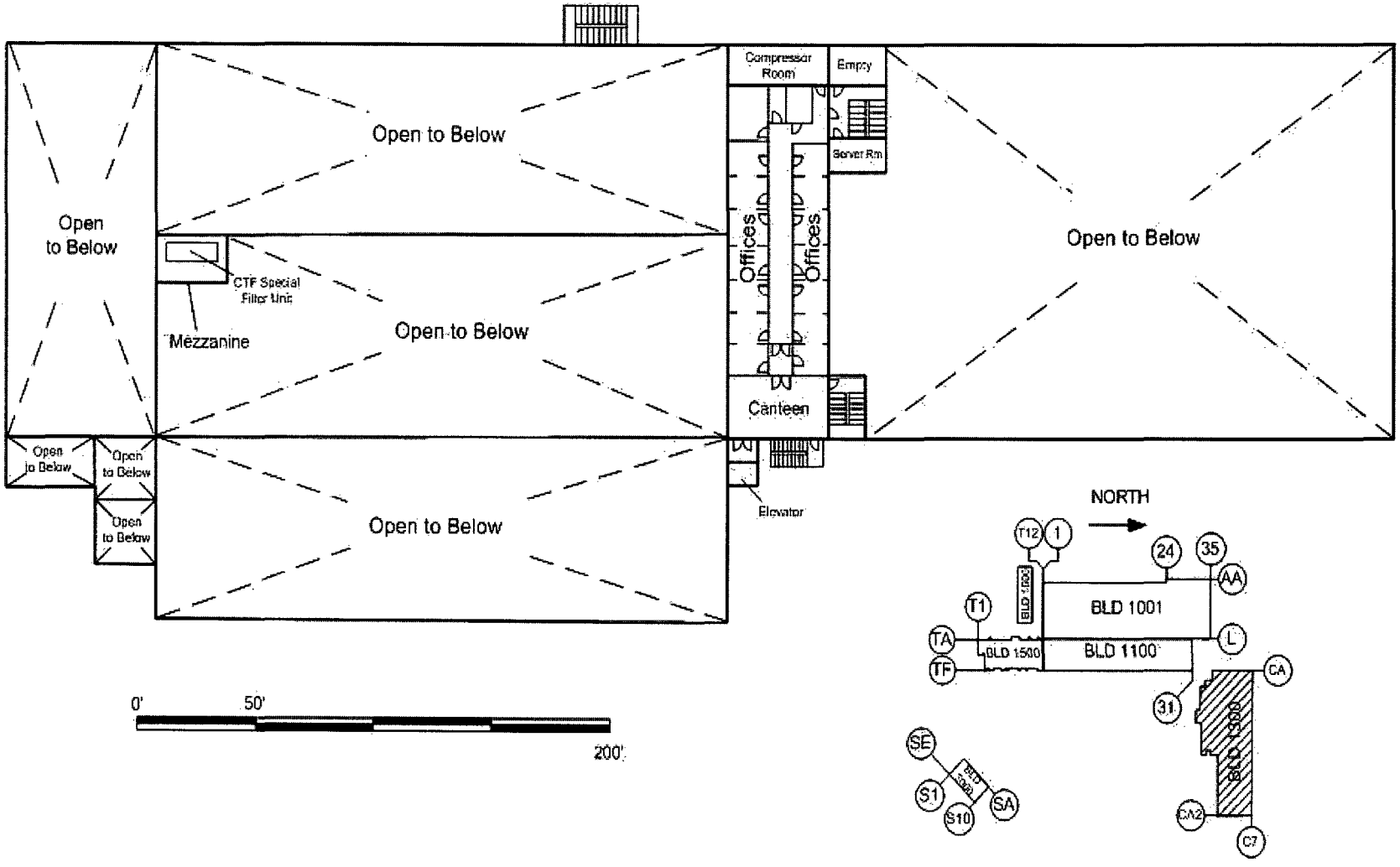

Figure 3.3-15 Centrifuge Assembly Building Second Floor

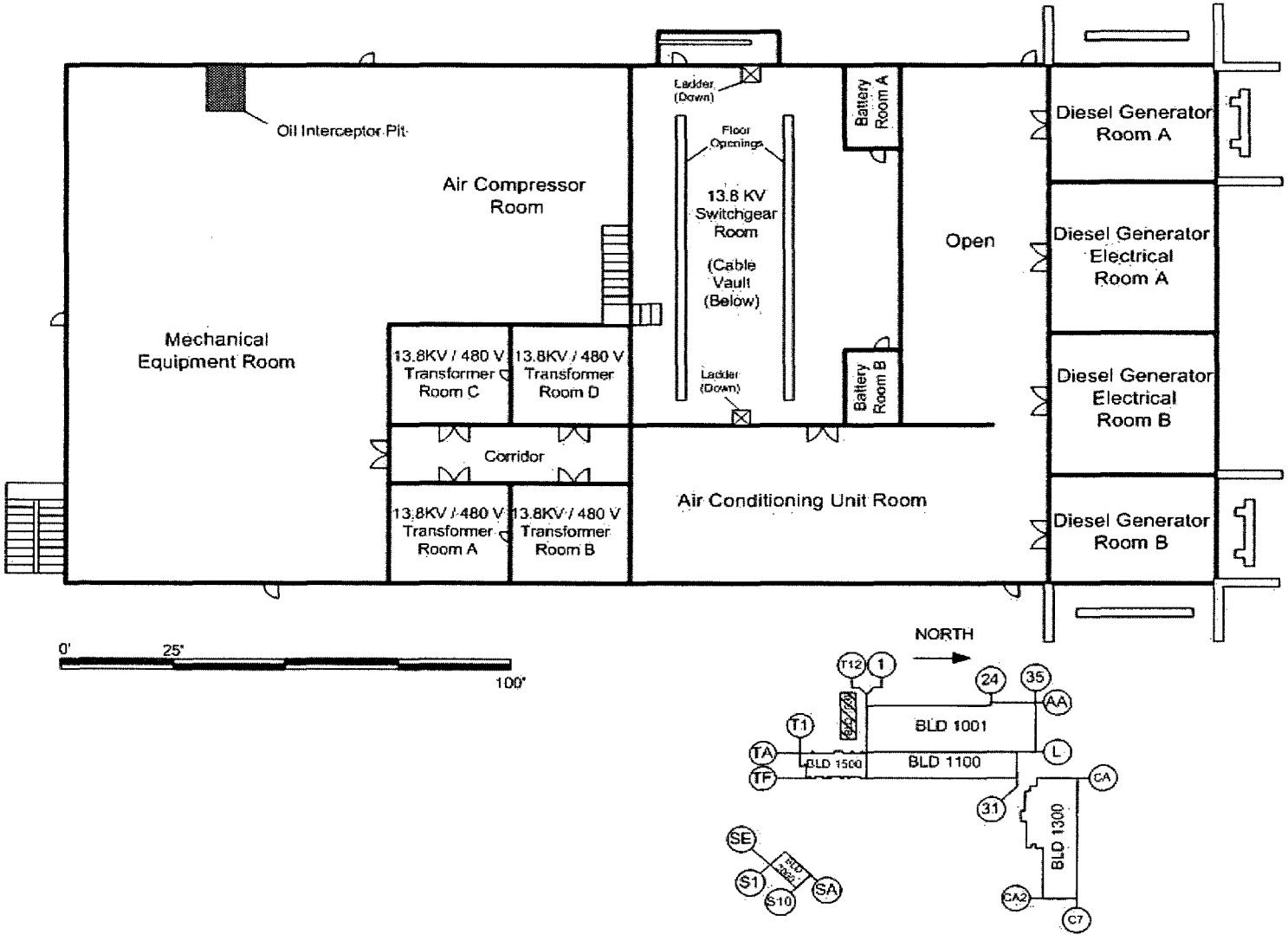

Figure 3.3-16 Central Utilities Building First Floor

3.4 PROCESS DESCRIPTIONS

This section provides a description of the enrichment processes and systems analyzed as part of the Integrated Safety Analysis. A brief overview of the entire enrichment process is provided followed by a detailed description of each process system. This section provides design, operational, and process flow information to support the hazard and accident analysis, as well as to assist in understanding the overall design and function of the National Enrichment Facility (NEF).

UF_6 enrichment systems are comprised of four major systems:

- UF_6 Feed System
- Cascade System
- Product Take-off System
- Tails Take-off System.

In addition to the four primary systems listed above, the following major support systems are discussed in this section:

- Product Blending System
- Product Liquid Sampling System
- Contingency Dump System.

Finally, the following processes and systems are discussed based on their supporting relationship to the enrichment process and the handling of UF_6:

- GEVS
- Centrifuge Test Facility and Centrifuge Post Mortem Facility
- Material Handling.

Each of the sections that discuss the 10 processes identified above are generally organized to present the following information:

- Functional Description
- Major Components
- Design Description
- Interfaces
- Design and Safety Features
- Operating Limits
- Instrumentation

Items relied on for safety associated with the processes and systems identified above are listed in Section 3.8, Items Relied On For Safety (IROFS).

The calculated values of k_{eff} provided in the following sections were obtained using the criticality code MONK8A (SA, 2001), in conjunction with the JEF2.2 nuclear data library. All values of k_{eff} given in the following sections are equal to $k_{calc} + 3\ \sigma_{calc}$ with a safety limit of 0.95.

In the following sections, the design process parameter values are specified with a datum of standard atmospheric pressure at sea level. These values will be finalized to reflect the site-specific NEF elevation during the design phase and the ISA Summary will be revised accordingly.

3.4.1 Overview Of Gas Centrifuge Enrichment Process

The function of the NEF is to enrich (increase) the amount of ^{235}U isotope in uranium hexafluoride (UF_6) from naturally occurring feed at 0.711 $^{w}/_{o}$ up to a maximum of 5.0 $^{w}/_{o}$. The enriched UF_6 is then used for manufacturing fuel for commercial electricity generating nuclear power plants.

An overview of the enrichment process (Ref. Figure 3.4-1, Pictorial Representation of the Enrichment Process) systems and the enrichment support systems are discussed below. Additional details on each of the enrichment process systems are provided in subsequent sections.

3.4.1.1 UF_6 Feed System

(See SAR § 12.2.2.1) The first step in the process is the receipt of the feed cylinders and preparation to feed the UF_6 into the enrichment process.

Natural UF_6 feed is received at the NEF in Department of Transportation (DOT) 7A, Type A cylinders from a conversion plant. The cylinders are ANSI N14.1, 48Y cylinders. Pressure in the feed cylinders is below atmospheric (vacuum) and the UF_6 is in solid form.

The function of the UF_6 Feed System is to provide a continuous supply of gaseous UF_6 from the feed cylinders to the cascades.

To begin the enrichment process, a 48-in feed cylinder is placed into a Solid Feed Station. There are five Solid Feed Stations per Cascade Hall, with four supporting the current SWU capacity and the fifth to support the planned SBM expansion and operational flexibility. Normally three are online. Each Solid Feed Station consists of an insulated enclosure, heated by electric heaters, into which the cylinder is placed. The cylinder is heated to 53°C (127°F) in the Solid Feed Station. At this temperature and pressure (sub-atmospheric), the solid UF_6 sublimes into a gas. Two important safety features of the feed system are that (1) at no time does the UF_6 go into a liquid phase and (2) station design features prevent a 30B product cylinder from being connected to the feed system, thereby eliminating the potential for a criticality event based on over-enrichment of the material in a 30B product cylinder.

The feed purification system is used to remove the light gas components from the UF_6 feed material to a specified level prior to admittance to the cascades. This protects the centrifuges against high intake of light gas and enhances cascade efficiency by limiting impurities.

For each Cascade Hall, there are two feed purification Low Temperature Take-off Stations (LTTS). These stations consist of insulated enclosures that are maintained at operating temperatures by electrically operated chiller units. 48Y cylinders are placed into the LTTS and chilled . As the gaseous UF_6 enters the cylinder, desublimation into solid UF_6 occurs. In addition to the LTTS, there are two UF_6 Cold Traps which desublime UF_6, carbon traps, aluminum oxide (Al_2O_3) traps, and vacuum pumps, used to transfer residual light gas to the Pumped Extract GEVS . The carbon and aluminum oxide traps remove trace UF_6 and HF from the gas stream.

After purification, the UF_6 gas is then fed through a main header to the cascades, where the enrichment process actually occurs. Main header pressure is limited to 65 mbar (26.1 in. H_2O) to prevent the gaseous UF_6 from desubliming back to a solid at ambient temperature.

3.4.1.2 Cascade System

(See SAR § 12.2.2.2) The function of the Cascade System is to receive gaseous UF_6 from the UF_6 Feed System and enrich the ^{235}U isotope in the UF_6 to a maximum of 5 $^{w}/_{o}$.

Multiple gas centrifuges make up arrays called cascades. The cascades separate gaseous UF_6 feed with a natural uranium isotopic concentration into two process flow streams – product and tails. The product stream is enriched in the ^{235}U isotope. The tails stream is depleted in the ^{235}U isotope.

3.4.1.3 Product Take-off System

(See SAR § 12.2.2.3) The function of the Product Take-off System is to provide continuous withdrawal of the enriched gaseous UF_6 product from the cascades.

The product streams leaving the cascades (at each Cascade Hall) are brought together into one common manifold. The product stream is transported via a train of vacuum pumps to Product Low Temperature Take-off Stations. There are five Product LTTS per Cascade Hall. Normally two are on-line when using 30B cylinders. Each LTTS consists of an insulated enclosure that is maintained at operating temperature by electrically operated chiller units. A 30B cylinder is placed into the LTTS and cooled. The 30B cylinders contain final product to be shipped to the customer. The 30B cylinders are used internal to the plant for blending purposes. As the enriched gaseous UF_6 enters the cylinder, desublimation into solid UF_6 occurs. An important safety feature of the Product Take-Off Stations is the design features that prevent using a 48-inch cylinder to collect product material. This eliminates the potential for a criticality event based on over-enrichment if the 48-inch cylinder with enriched product material was inadvertently used as a feed cylinder.

The entire system operates at sub-atmospheric pressure.

The Product Take-off System also contains a system to purge and dispose of light gas impurities from the enrichment process. This system consists of product vent UF_6 Cold Traps into which UF_6 desublimes while leaving the light gas in a gaseous state. The UF_6 Cold Trap is followed by product vent vacuum pump/chemical trap sets, each consisting of an activated carbon trap, two aluminum oxide traps, and a vacuum pump with an aluminum oxide oil trap on the pump suction and a mechanical oil trap (exhaust filter) on the pump discharge. The carbon trap removes small traces of UF_6 and the aluminum oxide trap removes any HF from the gas flow. The oil traps prevent oil migration both upstream and into the Pumped Extract GEVS.

There are connections to the Assay Sampling System and the On-line Mass Spectrometer System for product sampling and analysis.

3.4.1.4 Tails Take-off System

(See SAR § 12.2.2.4) The primary function of the Tails Take-off System is to provide continuous withdrawal of the gaseous UF_6 tails from the cascades. A secondary function of this system is to provide a means for removal of UF_6 from the centrifuge cascades under abnormal conditions.

The tails stream exits each cascade through a primary header, goes through a pumping train, and then to Tails Low Temperature Take-off Stations. There are eleven Tails Low Temperature Take-off Stations per Cascade Hall,with eight supporting the current SWU capacity and three additional stations to support the planned SBM and operational flexibility. Under normal operation, typically seven of the LTTS are in operation receiving tails and one is on standby.

Each Low Temperature Take-off Station consists of an insulated enclosure that is maintained at –25°C (-13°F) by electrically operated chiller units. 48Y cylinders are placed into the LTTS and cooled. As the gaseous depleted UF_6 (tails) enters the cylinder, it desublimes into solid UF_6.

The entire system operates at sub-atmospheric pressure.

The Tails Take-off System also has an evacuation pump/chemical trap set, and connections to the Assay Sampling Subsystem and an On-line Mass Spectrometer System for continuous gas sampling.

3.4.1.5 Product Blending System

(See SAR § 12.2.2.5) The primary function of the Product Blending System is to provide means to fill 30B cylinders with UF_6 at a specific enrichment of ^{235}U to meet customer requirements. This is accomplished by blending (mixing) UF_6 at two different enrichment levels to one specific enrichment level. The Product Blending System can also be used to transfer product from a 30B cylinder to another 30B cylinder without blending.

The Product Blending System is sized for the complete 3,000,000 SWU/yr enrichment plant production.

This system consists of Blending Donor Stations (which are similar to the Solid Feed Stations) and Low Temperature Take-off Blending Receiver Stations (which are similar to the LTTS described earlier).

The donor system consists of two Blending Donor Stations. Each station consists of an insulated enclosure (similar to the Solid Feed Station enclosures). Full 30B product cylinders at various enrichment levels are placed into the Blending Donor Stations and are heated to sublime the solid UF_6 to gas. Sublimed gas from the two Blending Donor Stations is transported to two Blending Receiver Stations.

Each Blending Receiver Station consists of an insulated enclosure that is maintained at the desired temperature by electrically operated chiller units. Empty 30B cylinders are placed into the station and cooled to. As the gaseous UF_6 from the Blending Donor Stations enters the cylinder, desublimation into solid UF_6 occurs. An important safety feature of the Blending Receiver Stations is the station design features that prevent using a 48-inch cylinder to collect product material. This eliminated the potential for a criticality event based on over-enrichment if the 48-inch cylinder with enriched product material was inadvertently used as a feed cylinder.

There are no vacuum pumps used to transfer product in this system. The Product Blending System has a vent system similar to the product vent system.

3.4.1.6 Product Liquid Sampling System

(See SAR § 12.2.2.6) The function of the Product Liquid Sampling System is to obtain a representative assay sample from filled product cylinders. The sample is used to validate the exact enrichment level and quality of UF_6 in the filled product cylinders, before the cylinders are sent to the fuel processor.

The Product Liquid Sampling System and Sub-Sampling System (Section 3.5.18) are the two systems at NEF that change solid UF_6 to liquid UF_6. The main piece of equipment used in this system is the Product Liquid Sampling Autoclave. A filled 30B product cylinder is placed into the autoclave and a manifold (inside the autoclave), which can support up to three sample bottles, is connected to the 30B cylinder valve. After closing the autoclave door, the autoclave is heated by air heated with electric heaters. As the temperature of the UF_6 in the cylinder increases, the pressure also increases. When the pressure in the sample manifold reachesa pre-designated pressure, the temperature is stabilized. At this point, the UF_6 is a liquid. In order to assure that a sample represents the entire contents of the cylinder, it is necessary to homogenize the UF_6. The UF_6 will homogenize when the UF_6 becomes liquid at the high pressure and temperature. Homogenization typically lasts for 16 hours. After the homogenization period, the sampling process is initiated.

After homogenization, with the sample bottle valves closed, the autoclave is tilted via a tilting mechanism to 30 degrees from horizontal. After the sample manifold is filled, the autoclave is lowered to horizontal, and the sample bottle valves are opened and closed in sequence to collect the liquid samples. The autoclave and cylinder is then cooled down and the autoclave is vented and opened for sample bottle removal.

One of the main safety features of the autoclave is that it is designed to provide a secondary confinement barrier in the unlikely event a leak should occur in the UF_6 cylinder or connected piping while the UF_6 is in liquid form. Numerous controls are designed into the autoclave to mitigate overheating and other conditions that may affect the integrity of the UF_6 system.

3.4.1.7 Passivation Activity

The passivation activity occurs in the UF_6 Feed System (including Feed Purification System), Tails Takeoff System and Product Takeoff Systems and prior to connecting the systems to the cascades. This activity is performed to remove moisture and inherent hydrocarbon residue in the process systems caused by construction activity. Following nitrogen purging, evacuation and helium leak checks to the systems, the systems are passivated by introducing a controlled amount of UF_6 into the systems to react with the moisture and hydrocarbon residue.

3.4.2 (See SAR § 12.2.2.1)UF_6 Feed System

3.4.2.1 Functional Description

The principal function of the UF_6 Feed System is to provide a continuous supply of gaseous uranium hexafluoride (UF_6) from the feed cylinders to the cascades (Ref. Figure 3.3-3, UF_6 Handling Area, Equipment Locations and 3.4-2, Process Flow Diagram, UF_6 Feed System). Sublimation from the solid phase, at pressures significantly below atmospheric, is the process used in the UF_6 Feed System. Purification of the as-received UF_6 feed material is accomplished in the Feed Purification Subsystem, where light gas components, primarily air and HF, are removed. This protects the centrifuges against excessive intake of light gas, which improves cascade production efficiency. Secondary functions of the Feed Purification Subsystem are to vent the light gas from the system during cylinder changeouts and to remove the final quantity of UF_6 (the heel) from the feed cylinder. The system produces intermittent gaseous effluent from UF_6 purification operations. Additional small intermittent quantities of gaseous effluent are produced from purging and evacuating the flexible piping used to connect the feed and feed purification cylinders. These effluents are treated by the Feed Purification UF_6 Cold Traps and Vacuum Pump/Chemical Trap Sets to remove UF_6 and HF before being routed to the Pumped Extract GEVS ExtractGEVS for further treatment. Solid wastes are produced from periodic change-out of chemical and oil traps. There are no liquid effluents directly produced in this system. Vacuum pumps are taken out of service for maintenance and the pump oil is reprocessed in the CRDB and reused.

The UF_6 Feed Systems are located in the UF_6 Handling Area of each SBM. The UF_6 Feed Systems are operated from the Control Room, with the exception of maintenance and preparation activities, which are controlled locally.

3.4.2.2 Major Components

The major UF_6 Feed System components are described below.

A. Solid Feed Station.

A Solid Feed Station (Ref. Figure 3.4-3, Solid Feed Station Equipment Drawing) consists of an insulated box with a non-flammable core, complete with rails for the electric carriage of the cylinder transporter. Each Solid Feed Station uses an electric air heater and circulation fan, to heat solid UF_6 causing it to sublime within the cylinder. A Solid Feed Station weighing device (a frame with four load cells) provides continuous on-line weighing of UF_6 in the feed cylinder.

The front of the Solid Feed Station is made up of a single door. Connection of the cylinder in a Solid Feed Station is made at the front (door) end. The Solid Feed Station does not have a rear opening. Rubber seals are used on the openings in the Solid Feed Station to minimize leaks for energy conservation.

B. Solid Feed Station Valve Hotbox.

Valves in a Solid Feed Station Valve Hotbox connect the feed cylinder to the Main Feed Header, the Feed Purification Subsystem, or the Nitrogen System. Manual and automatic isolation valves, a pressure control valve, and pressure transducers are contained in the electrically heated hotboxes to maintain them at a stable temperature. The UF_6 piping between the Solid Feed Station and hotbox is heat traced.

C. Main Feed Header.

The Main Feed Header connects the Solid Feed Station Valve Hotboxes to each of the cascades in a Cascade Hall. Pressure is controlled in the header so that heat tracing is not required.

D. Feed Purification Subsystem.

A Feed Purification Subsystem is provided for each Cascade Hall and consists of two Low Temperature Take-off Stations (LTTS), each with associated valve hotbox, UF_6 cold trap and heater chiller unit, and a vacuum pump/chemical trap set. One Feed Purification Subsystem is provided for each Cascade Hall, but each major component in the system is duplicated. The major Feed Purification Subsystem components are described below:

1. Low Temperature Take-off Station (LTTS) (Ref. Figure 3.4-4, Low Temperature Take-off Station Equipment Drawing). An LTTS consists of a composite panel box construction complete with rails for the electric carriage of the cylinder transporter. The LTTS panels have a non-flammable insulated core and are vapor sealed to prevent ice build-up within the insulation. Each LTTS incorporates an air chiller unit, with controls, to remove thermal energy from the UF_6 gas to cause it to desublime in the cylinder. The chiller unit uses a heater during the defrost cycle, to prevent ice buildup on the coils. The cylinder valve and inlet piping are electrically heated to prevent UF_6 from desubliming and blocking the cylinder inlet. An LTTS weighing device (a frame with four load cells) provides continuous on-line weighing of UF_6 in the purification cylinder.

   The front of the LTTS is made up of a single door and the back is furnished with an opening to facilitate connection of the cylinder to the UF_6 piping. Seals on the openings in the LTTS minimize leaks for energy conservation. The LTTS access openings are provided with heat tracing to prevent ice build-up.

2. Low Temperature Take-off Station Valve Hotbox. Valves in a LTTS valve hotbox connect the LTTS to the Solid Feed Station Valve Hotboxes, the UF_6 cold traps, or the Nitrogen System. Manual and automatic isolation valves and a pressure transducer are contained in the electrically heated hotboxes to maintain them at a stable temperature. The UF_6 piping between the Solid Feed Station Valve Hotboxes and the LTTS Valve Hotboxes is heat traced.

3. UF_6 Cold Trap (Ref. Figure 3.4-5, UF_6 Cold Trap Equipment Drawing). Each UF_6 cold trap consists of an insulated horizontal tube with internal baffles. The UF_6 cold trap has a dedicated heater/chiller unit operating at a cooling set point and a heating set point. Each heater/chiller unit contains a heat exchange media [approximately 70 L (19 gal) of silicon oil]which circulates around each cold trap. The low temperature removes the thermal energy from the UF_6 gas, causing it to desublime on the internal walls of the trap, while leaving the light gas in the gaseous phase. The high temperature results in sublimation of the UF_6 contents of the UF_6 cold trap for transfer back to a feed purification cylinder. Each end of the UF_6 cold trap is heat traced to prevent the UF_6 from solidifying and blocking the UF_6 cold trap entrance or exit. The UF_6 cold trap has a weighing device to provide continuous on-line weighing of the UF_6 accumulated.

   An automatic control valve located after each UF_6 cold trap restricts the flow of gases through the UF_6 cold traps. This ensures an adequate residence time for the gases in the UF_6 cold trap to allow all of the UF_6 to desublime.

4. Vacuum Pump/Chemical Trap Set (Figure 3.4-6, Chemical Trap Equipment Drawing). The UF_6 cold traps are followed by vacuum pump/chemical trap sets. Each set has an activated carbon trap, two aluminum oxide traps, an insulated vacuum pump with nitrogen purge, and an aluminum oxide oil trap on the pump suction and a mechanical oil trap (exhaust filter) on the pump discharge. The vacuum pump exhausts into the Pumped Extract GEVS. The activated carbon trap removes small traces of UF_6. The aluminum oxide trap removes HF. The oil traps prevent oil migration both upstream and into the Pumped Extract GEVS.

E. Mobile Feed Sampling Rig

The Mobile Feed Sampling Rig is used to take UF_6 process samples from feed cylinders prior to UF_6 material being introduced into the cascades. Once the required samples are taken the rig will be evacuated through a chemical trap and pump for removal of any remaining UF_6 and HF and exhausted to the Pumped Extract GEVS. The Mobile Feed Sampling Rig is comprised of automatic and manual valves, nitrogen purging, and an evacuation pump/trap set, where the trap consists of a mixed-bed containing both activated carbon and aluminum oxide. An aluminum oxide oil trap is on the pump suction and a mechanical oil trap (exhaust filter) is on the pump discharge. The oil traps prevent oil migration both upstream and into the Pumped Extract GEVS. This pump/trap set also contains a flow restriction device (IROFSC21) on the suction side of the pump. A temperature instrument prevents the mixed-bed trap from overheating. The sensor monitors the mixed-bed trap temperature. If the high temperature trap setpoint is reached, an alarm is activated.

F. Helium Leak Test Cart

The Helium Leak Test Cart connects to piping systems in the feed, tails or product stream that has been isolated for testing. The Helium Leak Test Cart is required to evacuate air and/or nitrogen from the isolated portion of the system and allow a vacuum to be drawn to enable leak testing of pipe and valves. This leak detection method is used to implement ASME Code Case 185 as an alternative to ASME B31.3 testing for process piping. The Helium Leak Test Cart is comprised of automatic and manual valves, cold trap, helium leak detector, helium bottle, vacuum pump, an aluminum oxide oil trap on the pump suction and a mechanical oil trap (exhaust filter) on the pump discharge. The oil traps prevent oil migration both upstream and into the Pumped Extract GEVS.

Although the Helium Leak Test Cart is described here in the feed system section, it should be noted that it is used throughout the UF_6 process system e.g., product, tails, product blending and contingency dump systems. For discussion of the criticality evaluation for this cart see Section 3.4.4.8.10.

3.4.2.3 Design Description

The design bases and specifications are given in Table 3.4-1, UF_6 Feed System Design Basis. Applicable Codes and Standards are given in Table 3.4-2, UF_6 Feed System Codes and Standards.

The entire UF_6 Feed System operates at sub-atmospheric pressure. In the event of a confinement barrier failure (e.g., pipe leak), releases of uranyl fluoride (UO_2F_2) and HF are greatly minimized because air will migrate into the system rather than UF_6 escaping from the system. This important safety feature greatly limits the likelihood of exposures.

There are five Solid Feed Stations, each with an associated valve hot box, connected in parallel to the main feed header in each UF_6 Feed System. At any time three Solid Feed Stations can be on-line to handle the maximum UF_6 feed flow to one Cascade Hall. The remaining Solid Feed Stations can be in either standby, off-line, preparation, or maintenance mode.

Each UF_6 Feed System has a dedicated Feed Purification Subsystem, consisting of two LTTSs, two UF_6 Cold Traps, and two Vacuum Pump/Chemical Trap Sets connected in parallel. One of the LTTSs, UF_6 Cold Traps, and Vacuum Pump/Chemical Trap Sets is available for use, while the second is a spare and can be in, off-line, preparation (cylinder being installed or removed), or maintenance mode.

Prior to feeding UF_6 to the cascades, the contents of each cylinder are purified and verified as natural UF_6. This verification is accomplished by sampling and assay analysis of a feed cylinder contents for uranic enrichment. Any light gases, primarily air and HF, and a specified quantity of UF_6 are transferred to a purification cylinder, to ensure that impurities are removed from the feed cylinder. Likewise, the purification cylinder is relieved through the UF_6 Cold Trap and Vacuum Pump/Chemical Trap Set to the Pumped Extract GEVS. Finally a sample of the gaseous UF_6 is desublimed into a sample bottle for analysis.

The Solid Feed Station provides controlled heat to the feed cylinder to sublime the UF_6 directly from solid phase to gaseous phase at subatmospheric pressures. Pressure is controlled throughout the system to maintain the sub-atmospheric pressures and to provide the required flow rate. UF_6 piping and valve stations where UF_6 desublimation could occur are heated. The building HVAC system is designed to maintain a minimum temperature of 18°C (64.4°F), therefore heat tracing of the main feed header, which is controlled at a pressure less than 65 mbar (26.1 in. H_2O), is not required.

All components and piping in the UF_6 Feed System operate at subatmospheric pressure. Release of UF_6 and/or HF is unlikely because leakage, if it were to occur, would be into the system.

The materials of construction and fabrication specifications for the equipment and piping used in the UF_6 Feed System are compatible with UF_6 at the operating conditions and have been proven by over 30 years of use in existing Urenco European enrichment plants.

3.4.2.4 Interfaces

The UF_6 Feed System interfaces with the following systems and utilities:

A. Cascade System
B. Pumped Extract GEVS
C. Nitrogen System
D. Compressed Air System
E. Electrical System
F. Plant Control System
G. Hoisting and Transportation Equipment.

3.4.2.5 Design and Safety Features

The UF_6 Feed System is designed and constructed to provide safe operation for plant personnel as well as the general public. Principal design features are as follows:

A. All process piping, valves, vessels and pumps in the UF_6 Feed System operate at sub-atmospheric pressure.
B. Piping is all welded construction and process valves are bellows sealed.
C. Before disconnecting any equipment, the process piping is evacuated and purged with nitrogen.
D. A local exhaust to the Pumped Extract GEVS is provided for initial plant operations via a temporary local extract cross-connection any time a UF_6 line is disconnected.
E. Before discharge to the Pumped Extract GEVS, all gases flow across activated carbon and aluminum oxide in the Feed Purification Subsystem vacuum pump/chemical trap set to remove any traces of UF_6 and HF.
F. Temperature in each Solid Feed Station and LTTS is monitored and controlled.
G. Feed purification cylinder overfill is prevented by two weight trips. The first is at the desired net weight of UF_6 and the second is at the gross weight of the cylinder with UF_6 contents. Only the first trip is operator adjustable.

H. Hydrocarbon lubricants are not used. The Feed Purification vacuum pumps are lubricated with perfluorinated polyether (PFPE) oil, a fully fluorinated synthetic oil.

I. Removal of a connected cylinder from an LTTS is prevented by an interlock system. Unless the flexible hose on the cylinder valve has been removed and locked in its "holster," a physical barrier prevents the cylinder transporter drawbridge from docking with the station rails, thereby preventing cylinder removal.

J. Temperature in the Feed Purification Subsystem carbon trap is monitored and controlled.

K. Should a blockage occur in a section of UF_6 Feed System process piping, the heat tracing on that section of pipe is not allowed to be switched on until the solid UF_6 has been removed.

L. Mechanical interlocking systems are provided in all solid feed and low temperature stations to prevent the operation of the stations loaded with an incorrect cylinder type . The system prevents the use of cylinders identified for product take-off from being used in either a solid feed station or feed purification station.

3.4.2.6 Operating Limits

The UF_6 Feed System must provide purified feed to the cascades at the minimum and maximum rates under normal operating conditions.

3.4.2.7 Instrumentation

The process variables, such as pressure, temperature, and valve positions, are automatically controlled. Deviations from specified values are detected and indicated via a two level alarm system. At the first alarm, the operator has the ability to manipulate the process to restore it to normal. A second alarm, automatic action is taken to provide system protection. For safety, system protection, and operability, some sensors are duplicated and others are installed in triplicate. Action is initiated if any one out of two or three sensors reach alarms.

A. Solid Feed Station

Solid Feed Station air temperature and cylinder temperature are monitored to prevent feed cylinder over pressurization due to overheating. Normal air temperature in the Solid Feed Station during heating ranges from ambient to 61°C (142°F), while the cylinder temperature ranges from ambient to 55°C (131°F). An alarm gives the operator warning of high temperature. A second alarm trips the Solid Feed Station heater off.

In addition to the temperature controls, the Solid Feed Station has two independent and diverse temperature protection instruments (Items Relied on For Safety (IROFS)). One is fail-safe hard wired Resistance Temperature Detector (RTD), and the other IROFS is a fail-safe thermocouple. Both instruments measure the Solid Feed Station air temperature. Both instruments automatically de-energize the air heater and blower if the Solid Feed Station air temperature rises above their set point. To ensure cylinder integrity both instruments are set to trip at a set point which is well below the calculated set point.

The feed cylinder pressure is monitored with dual sensors to prevent over pressurization of the cylinder, piping, and valves. The first alarm gives the operator warning of over pressure. The second alarm automatically closes the cylinder valve and trips the Solid Feed Station off-line, which de-energizes the air heaters and blower.

Each Solid Feed Station has a weighing system to monitor the contents of the feed cylinder. A weight trip set at 800 kg (1,764 lb) gross is used to indicate a cylinder is present in the Solid Feed Station. A second weight trip, equal to a net UF_6 weight of 100 kg (221 lb), indicates the cylinder is empty and puts the Solid Feed Station in standby.

B. Solid Feed Station Valve Hotbox

A single pressure transducer is located in the piping in each Solid Feed Station Valve Hotbox. When selected to control the Solid Feed Station, the pressure transducer is used to modulate the Solid Feed Station feed control valve. A first alarm warns the operator of high pressure. A second alarm automatically switches the Solid Feed Station to standby and closes the outlet valve.

Low feed pressure is also alarmed. The first alarm warns the operator of loss of feed supply. A second alarm indicates the feed cylinder is empty.

C. Main Feed Header

Two pressure transducers are located in the main feed header near the Solid Feed Stations. When selected to control a Solid Feed Station, one of two pressure transducers is used to modulate the Solid Feed Station feed control valve. An alarm warns the operator of high pressure. A second alarm automatically switches all of the Solid Feed Stations to standby and closes each Solid Feed Station's outlet valve. A low alarm atwarns the operator of loss of feed supply.

In addition, three pressure transducers are evenly distributed along the feed header near the cascades. These act on a one out of three basis to protect the cascades from abnormal pressures. A high alarm warns the operator of high pressure. A second high alarm automatically prevents feeding into the cascades. A low alarm warns of loss of the feed supply. A second low alarm automatically prevents feeding into the cascades.

D. Feed Purification Low Temperature Take-off Stations

The purification cylinder inlet pressure is monitored to assure that a cylinder is connected to the system. Normal pressure is <250 mbar (<100 in. H_2O). An alarm warns of high pressure. A second alarm closes the LTTS Valve Hotbox inlet valve and the LTTS is tripped to standby. At a pressure determined by the system description documents the cylinder is available for feed purification, and below a still lower pressure determined by the system description document it is available for feed cylinder heel removal.

Each LTTS has a weighing system to monitor the contents of the purification cylinder. The first alarm is 8,500 kg (18,743 lb) net weight for a 48Y type cylinder, above which efficiency is reduced. At 12,400 kg (27,342 lb), the maximum operational net weight for a 48Y type cylinder, the LTTS trips to standby and the inlet valve closes. A second trip at 15,300 kg (33,737 lb) gross weight for a 48Y type cylinder also closes the inlet valve and trips the LTTS off-line. A low alarm at 800 kg (1,764 lb) gross weight indicates no cylinder present in the LTTS. The output of the weighing system also allows cylinder weight to be verified to be within specified trending limits.

For temperature control and protection from high temperatures, the LTTS has a stand-alone control and protection system. The total system consists of three sensors. For main LTTS temperature control, one sensor is mounted in the air return to the chiller unit and monitors the circulating air temperature. This sensor and local control maintains the LTTS temperature. In addition to controlling the LTTS temperature, one output is monitored by the Plant Control System (PCS) and warns when the air temperature rises above the normal operating reange. This would indicate a chiller failure or that the defrost heater is not functioning properly. The LTTS refrigeration unit has a defrost cycle to remove ice from the cooling coils. This is done with a defrost heater at the coils. When the defrost heater is on, the circulating air fan is off to minimize the increase in LTTS air temperature.
In addition to the closed loop control system previously described, there are two independent and diverse temperature protection instruments. These provide extra safety margin to protect against increases in temperature that may occur if the defrost heater control does not operate properly. The first instrument is a fail-safe hardwired RTD and the second instrument is a fail-safe thermocouple. Both instruments measure the temperature of the air inside the LTTS. Both instruments will trip the defrost heater and fan power supply in the event the air temperature rises above their set point. If heater trip occurs from these two instruments, the LTTS is automatically taken off-line and put into a standby mode.Both instruments are set to trip at a set point which is well below the calculated set point required to ensure cylinder integrity.

To prevent desublimation in the cylinder valve, the cylinder valve and inlet piping are electrically heated.

E. Feed Purification UF_6 Cold Traps

Dual pressure instruments monitor the UF_6 cold trap inlet pressure. The instruments have different ranges and each is used during different purification operations.

UF_6 cold trap outlet pressure is monitored during the purification operation. A high alarm warns of high pressure in the UF_6 cold trap. A second high alarm trips the UF_6 cold trap off-line, switching the heater/chiller unit off and closing the inlet and outlet valves. A low alarmwarns of low pressure and indicates the UF_6 cold trap is empty when collected UF_6 is being sublimed for transfer back to a purification cylinder. A second low alarmcloses the UF_6 cold trap outlet valve to prevent UF_6 flow to the vacuum pump.

A pressure sensor and control valve between each UF_6 cold trap and its vacuum pump/chemical trap set restricts the flow of light gases through the UF_6 cold trap to ensure all UF_6 desublimes and does not reach the carbon trap. The line pressure into the vacuum pump/chemical trap set is controlled.

A weighing system monitors the contents of the UF_6 cold trap. An alarm at 40 kg (88.2 lb) warns that the UF_6 cold trap is approaching capacity. A second alarm closes the UF_6 cold trap inlet and outlet valves.

The temperature of the UF_6 cold trap is maintained at –60°C (-76°F) during cooling and at 20°C (68°F) for heating during sublimation to empty the UF_6 cold trap of collected UF_6 (gas back). A low alarm warns of a chiller unit fault. A high alarm closes the UF_6 cold trap outlet valve and a second high alarm warns of high temperature during gas back. If the temperature continues to rise, the UF_6 cold trap trips off-line to avoid desublimation of UF_6 in the header.

F. Feed Purification Vacuum Pump/Chemical Trap Sets

A temperature instrument prevents the carbon trap from overheating The sensor monitors the carbon trap temperature. If the high temperature trip setpoint is reached, a signal is sent to the PCS to warn the operator.

The second (downstream) activated aluminum oxide (Al_2O_3) trap on the vacuum pump/chemical trap set is also equipped with a weigh system. An increase in the weight of the trap indicates the first Al_2O_3 trap is saturated. The weigh system on the aluminum oxide trap displays a weight locally and provides a healthy/unhealthy status to the PCS. There is no control function on this weight indicator. The chemical traps are replaced based on the accumulated weight.

G. (See SAR § 12.2.1.1.5) Mobile Pressure Transducer Calibration Rig

The Mobile Pressure Transducer Calibration Rig is used for the calibration of pressure transducers located throughout the UF_6 process systems that monitor process pressures. The desired pressure transducer is isolated from the process UF_6 gas stream by closing the manual valves located upstream and downstream of the pressure transducer. This rig consists of manual and automatic valves, a number of digital pressure transducers, a pirani-type pressure measurement device, a mixed-bed chemical trap, two rotary vane vacuum pumps, a turbo-molecular vacuum pump, connection for exhaust to the pumped extract GEVS and a self contained nitrogen bottle. An aluminum oxide oil trap is one the pump suction and a mechanical oil trap (exhaust filter) is on the pump discharge. The oil traps prevent oil mitigration both upstream and into the Pumped Extract GEVS. The rig also has a provision that enable the use of the plant nitrogen system. The gaseous nitrogen is used for purging of the system. The mixed-bed trap absorbs any trace amounts of UF_6 and HF gas and remaining light gaseous effluents are vented to the pumped extract GEVS.

This rig contains flow restriction devices (IROFSC21) on the suction side of the pumps. IROFSC21 is applied two different places on this rig. One is in the flow path through the mixed bed trap and the other is in the flow path through the turbo pump. Although the Mobile Pressure Transducer Calibration Rig is described here in the feed system section, it should be noted that it is utilized throughout the UF_6 process system e.g., cascade, product, tails, product blending and contingency dump systems. For discussion of the criticality evaluation for this rig see Section 3.4.4.8.8.

3.4.2.8 Criticality Safety

The feed material used in the feed system is natural UF_6 with 0.711% enrichment. Criticality at this enrichment level is not credible, given the physical law. The only equipment associated with the feed system requiring a criticality evaluation is the Mobile Feed Sampling Rig, as this rig could be inadvertently connected to other parts of the process systems such as the cascade and product take-off systems with the use of an adaptor.

The Mobile Feed Sampling Rig is used to take UF_6 process samples through an inlet hose connected to the feed station hotbox system. Once the required sample are drawn, the rig will be evacuated through a vacuum pump and chemical trap set for removal of any remaining UF_6 and HF. The pump/trap set consists of a mixed-bed chemical trap, a rotary vane vacuum pump, an oil adsorber and an exhaust filter, and is connected to the plant GEVS for venting the exhaust of UF_6 and HF.

The items on the Mobile Feed Sampling Rig are safe by design individually. The Mobile Feed Sampling Rig as a whole is a safe-by-design by physical arrangement as demonstrated in a nuclear criticality safety evaluation through comparison to a bounding calculation performed for the product vent vacuum pump/trap set described in Section 3.4.4.8.3.

3.4.3 (See SAR § 12.2.2.2) Cascade System

3.4.3.1 Functional Description

The function of the Cascade System is to receive gaseous UF_6, with a natural uranium isotopic concentration, from the UF_6 Feed System and separate it into two streams, increasing (enriching) the ^{235}U isotope content in one("product") and decreasing (depleting) the ^{235}U isotope content in the other ("tails") (Ref. Figure 3.4-7, The Enrichment Process, and Figure 3.4-8, Cascade Process Scheme Equipment Drawing). These UF_6 streams flow from arrays of gas centrifuges, called cascades, through headers to the Product Take-off System and Tails Take-off System.

3.4.3.2 Major Components

The major Cascade System components are:

A. Centrifuges

The latest qualified centrifuge, Model TC-12, contains a rotor that is used to produce centrifugal force needed for isotope separation (Ref. Figure 3.4-9, Principle of a Gas Centrifuge). An electromagnetic motor drives the rotor. A stationary center post in the rotor provides the input of UF_6 feed and output of UF_6 product and tails. The rotor assembly is inside an aluminum outer casing that is under vacuum. The casing provides a vacuum enclosure outside the rotor to reduce drag.

B. Centrifuge Drive System

The medium frequency supply system provides the electrical power at the required frequency for the centrifuge drive motors. The system consists of run and run-up solid-state frequency converters, a medium frequency distribution system and 60 Hz electrical supply transformers. The Electrical System is described in Section 3.5.2, Electrical System.

C. Cascade Piping

The arrays of centrifuges that make up a cascade are grouped into blocks; the cascade piping connects these blocks and provides feed, tails, and product flows.

D. Centrifuge Valve Station

The cascades are connected to the UF_6 Feed System, the Product Take-off System, the Tails Take-off System, and the Contingency Dump System. The associated cascade valves and instrumentation are supported on a cascade dedicated valve station. The valve station also provides connection points for the mobile sampling rig and mobile evacuation rigs.

E. Centrifuge Cooling Water Distribution System

The cascade temperature is controlled by a closed loop cooling water system. The cooling water flows through jacketed coils located at the top and bottom of the outer casing. The cascades are housed within thermal panel enclosures to maintain optimum temperature conditions. The Centrifuge Cooling Water Distribution System is described in Section 3.5.5.2, Centrifuge Cooling Water Distribution System.

F. Mobile Cascade Evacuation Rigs

There are three Mobile Cascade Evacuation Rigs. Two Mobile Evacuation Rigs (Table 3.4-22) are used to sustain a low pressure in cascades exposed to UF_6 (contaminated) prior to and during centrifuge run-up or run-down. The third rig is available for drawing a vacuum on a cascade that has not been exposed to UF_6. This "radiological clean" rig is marked to clearly differentiate between the contaminated and radiological clean rigs. The rigs connect to a cascade at the cascade valve station. Each rig consists of a roots vacuum pump, a mixed-bed trap (containing both activated carbon and aluminum oxide), and a rotary vane vacuum pump with an aluminum oxide oil trap on the pump suction and a mechanical oil trap (exhaust filter) on the pump discharge. Rig exhausts are connected to the Pumped Extract GEVS. The activated carbon trap removed small traces of UF_6. The aluminum oxide trap removes HF. The oil traps prevent oil migration both upstream and into the Pumped Extract GEVS. A temperature instrument prevents the mixed-bed trap from overheating. The sensor monitors the mixed-bed trap temperature. If the high temperature trip setpoint is reached, the Mobile Cascade Evacuation Rig pumps are deenergized.

G. Mobile Cascade Sampling Rig

A Mobile Sampling Rig (Table 3.4-22) is provided to periodically collect UF_6 samples from a cascade. The rig connects to a cascade at the cascade valve station. The Mobile Cascade Sample Rig consists of a liquid nitrogen dewar, a roots vacuum pump, an activated carbon trap, a rotary vane vacuum pump with an aluminum oxide oil trap on the pump suction and a mechanical oil trap (exhaust filter) on the pump discharge, and product and tails sample bottles. The rig exhausts to the Pumped Extract GEVS. The activated carbon trap removes small traces of UF_6. The oil traps prevent oil migration both upstream and into the Pumped Extract GEVS. A temperature instrument prevents the mixed-bed trap from overheating. The sensor monitors the mixed-bed trap temperature. If the high temperature trip setpoint is reached, an alarm is activated.

3.4.3.3 Design Description

Arrays of gas centrifuges, called cascades, separate gaseous UF_6 feed, with a natural uranium isotopic concentration, into a product stream enriched in the ^{235}U isotope and a tails stream depleted in the ^{235}U isotope.

Should the UF_6 in a cascade need to be rapidly removed to protect the equipment from a process upset or failure, it is automatically accomplished via the Tails Take-off System. Should this system be unavailable at the time, a Contingency Dump System functions as a backup. A centrifuge monitoring system detects rotor failures, i.e., "crashes," and signals the Control Room.

Each centrifuge has an outer casing which functions as a vacuum chamber to reduce friction on the centrifuge rotor, and acts as a barrier for flying parts should a centrifuge fail.

Mobile evacuation rigs are used to evacuate the cascade prior to startup, for maintenance, and shutdown purposes. A mobile cascade sample rig is provided to periodically collect UF_6 samples from a cascade. These rigs are connected at the cascade valve station.

The design bases, codes and specifications used by Urenco in the centrifuge and cascade design provide a large safety margin between normal and accident conditions so that no failures could result in any release of hazardous material. Applicable codes and standards are given in Table 3.4-3, Cascade System Codes and Standards. Operation of hundreds of thousands of centrifuges over many years in Europe have demonstrated the process, equipment, and containment reliability. The gas centrifuges used in the NEF, Urenco's Model TC-12, are designed to operate continuously for many years. The resultant loads from centrifuge failures are restrained by the casing and the floor mounting element (flomel). These components are designed so rotor debris does not penetrate the casing and the flomels do not break away from the floor. The inventory of UF_6 in each centrifuge and in a cascade is low. The UF_6 is contained by the outer casings that are housed within enclosures for thermal stability.

3.4.3.4 Interfaces

The Cascade System interfaces with the following systems and utilities.

A. UF_6 Feed System

B. Product Take-off System

C. Tails Take-off System

D. Contingency Dump System

E. Centrifuge Cooling Water Distribution System

F. Compressed Air System

G. Electrical System

H. Plant Control System.

3.4.3.5 Design and Safety Features

The Cascade System is designed and constructed to provide safe operation for plant personnel as well as the general public. Release of UF_6 to the atmosphere is minimized by:

A. All process piping, valves and vessels that contain UF_6 operate at sub-atmospheric pressure. Initial leaks would be inward to the system. Abnormal pressures caused by such leaks or process upsets are detected by strategically located pressure sensors and indicated by alarms. Appropriate actions are initiated by the operator. At certain levels, the actions begin automatically. Actions to stop UF_6 flow, isolate equipment, or shutdown systems are accomplished to avoid the release of UF_6.

B. If a centrifuge fails, (i.e., "crashes"), it is isolated to prevent contamination from entering other parts of the cascade. Current sensors are provided to detect crashes.

C. If a process upset occurs (pressure or temperature), the cascade is dumped to the Tails Take-off System. If the Tails Take-off System is unavailable, the gasses are evacuated to the Contingency Dump System.

D. The centrifuge outer casing is the primary barrier to the escape of UF_6. The casing encloses the rotor and its component parts and maintains them under vacuum. The outer casing provides confinement of the UF_6 in the centrifuge. It also serves to contain parts or fragments potentially spinning off a centrifuge during a failure. It is reinforced at both ends to contain the heavier rotor end caps and end cap fragments and has design features to prevent end cap debris from impacting non-reinforced areas of the casing. Cascades are designed so that failed centrifuges can be left in place.

E. The floor mounting element (flomel) and the associated bolts for the centrifuges are designed to remain intact after a rotor failure to prevent the centrifuge casing from breaking away and damaging other centrifuges or injuring workers. The flomel consists of a concrete floor mounting element with threaded metal inserts for anchoring the centrifuge foot flange via bolts. The flomel in turn is securely cast in the concrete floor of the Cascade Hall.

3.4.3.6 Operating Limits

The combined capacity of all Cascade Systems is3,000,000 SWU/yr with a maxium product assay limit of 5 $^{w}/_{o}$ ^{235}U. .

3.4.3.7 Instrumentation

The process variables such as pressures, temperatures, valve positions and flowrates are automatically controlled. Deviations from the specified values are detected and indicated via a two or three level alarm signal. Normally at the first alarm, the operator has the ability to manipulate the process to restore it to normal. At the second and sometimes the third alarm, automatic action is taken to provide system protection. For safety, system protection and operability sensors may be single, duplicate (one out of two action) or triplicate (one or two out of three action).

Each cascade is provided with two control systems. Under normal operating conditions one system carries out all of the required process control and protection logic; the second system provides a safety 'envelope' around the control system functionality. The failsafe mode for both systems is Contingency Dump.

If any out-of-limit temperatures, pressures or cooling water temperatures are detected, the cascade is automatically shutdown and UF_6 evacuation to the Tails Take-off System is initiated.

3.4.3.8 Criticality Safety

3.4.3.8.1 Centrifuges and Cascades

Criticality safety of TC-12 centrifuges was initially assessed assuming 6 $^{w}/_{o}$ ^{235}U enrichment without flooding. The only potential for a criticality incident in a centrifuge cascade is by gross uranium accumulation in failed centrifuges. To achieve criticality in a cascade would require an array of failed centrifuges to be completely filled with uranic breakdown (as $UO_2F_2 \cdot 3.5H_2O$). The extreme conditions required to obtain the necessary uranic accumulation for criticality by this mechanism could never credibly occur in practice. Furthermore, it is highly unlikely that: (1) the centrifuges in such an array would fail simultaneously, (2) the failures would lead to inleakage of moist air into the failed centrifuges, (3) all the failed centrifuges would fill up with UF_6 breakdown products, and (4) would have an Hydrogen/Uranium (H/U) ratio that is near optimum. Therefore, the possibility of a criticality incident in a centrifuge cascade can be considered not credible.

To assess criticality safety under flooded conditions, two calculations were performed for arrays of crashed centrifuge bores partially and completely filed with uranic breakdown (as UO_2F_2 $3.5H_2O$) (ETC Calculation Criticality Calculation for Crashed TC-12 Machines in Flood – Partially Filled Bores and ETC Calculation Criticality Calculation for Crashed TC-12 Machines in Flood – Completely Filled Bores). Various water levels up to 60 cm were used to obtain maximum $k_{eff.}$ For the arrays of partially filled centrifuge bores, k_{eff} was determined as a function of fill height to obtain the safe mass that meets the criticality safety criterion of k_{eff} <0.95.

The criticality calculations with MONK8A (SA, 2001) for flooding conclude that the case of partially filled bores is more limiting than that of completely filled bores. The safe mass for the limiting case under flooded conditions remains the same as for the dry conditions (i.e., no flooding) and represents 1,015 kg of UF_6 distributed in a 3x4 array of 12 bores, giving an average content of about 84.6 kg of UF_6 per bore. This quantity far exceeds the UF_6 holdup in an intact machine under normal conditions or the observed amount of uranic material formed due to air in-leakage into a failed machine, which is typically on the order of grams. There is no credible mechanism for such a large accumulation of uranic material in a failed or crashed machine. Furthermore, it is highly unlikely that: (1) the centrifuges in such an array would fail concurrently and the plant would continue to operate, (2) the failures would lead to large in-leakage of moist air or significant moderator intrusion into the failed centrifuges without crashing to stop the enrichment process, (3) all the failed centrifuges would fill significantly with UF_6 breakdown products, and (4) the UO_2F_2/water mixture would have an H/U ratio at the limiting upper value of 7 in a system requiring high vacuum for normal operation. Therefore, the possibility of an inadvertent criticality in a centrifuge cascade remains not credible under flooded conditions.

3.4.3.8.2 UF_6 Product Piping

Product piping in the Separations Building Modules (SBMs) varies in size. Only minimal surface deposition of UF_6 occurs in piping but criticality safety has been assessed for the possibility of localized blockages in pipes with the formation of uranyl fluoride due to air in-leakage.

MONK8A (SA, 2001) calculations were performed for generic arrays of pipe intersections, filled entirely with uranyl fluoride / water mixture at optimum moderation at 6.0 $^{w}/_{o}$ enrichment. The calculation assumed no flooding, as pipe runs are typically above the flood levels especially for the cascade headers which are located above the centrifuges. Spurious reflection with 2.5 cm of water was placed either at the model boundary or at each pipe to determine the more reactive configuration. The optimum H/U ratio varied with pipe size and spurious reflection model. The minimum permitted free space (i.e., edge separation) between intersections was determined to be 580 mm (22.8 in) for 150 mm (5.9 in) nominal pipe165 mm (6.5 in) for 100 mm (3.9 in) nominal pipe, and 70 mm (2.76 in) for 65 mm (2.56 in) nominal pipe; and no spacing restriction applies to piping of nominal diameter 40 mm (1.57 in) or less. If used, product pipes larger than the 150 mm nominal pipe require an explicit nuclear criticality safety analysis.

The above restrictions apply to individual pipe runs with up to 64 intersections or adjacent pipe runs totaling up to 64 intersections. This generic piping arrangement is based on a network of 64 piping nodes in a 4X4X4 cube, where each element of the cube has a vertical pipe and two horizontal pipes all meeting at right angles in the center (picture the meeting of the x, y, and z axis in a three-dimensional Cartesian coordinate system).

Parallel pipe runs containing product material will either fit within the safe-by-design value or be explicitly modeled and analyzed. For example, a safe condition can be demonstrated through analysis for the case where the spacing restriction might not be satisfied, but the piping might have fewer than 64 intersections.

The SBM piping conforms to the above specifications. If not, explicit calculations need to be performed to satisfy the passive Safe-By-Design (SBD) requirements. The affected product piping systems must be designed and demonstrated to meet the subcriticality requirements ($k_{calc} + 3\sigma_{calc} < 0.95$) for normal and credible abnormal conditions. Flooding up to 60 cm needs to be considered only if piping could be subject to the flood conditions in the event of a local intense precipitation.

3.4.3.8.3 Cascade Header Pipework

The pipe intersection criticality calculation described in Section 3.4.3.8.2 is for a generic piping arrangement. This calculation does not bound the configuration of the cascade header pipework because the parallel pipes are closer together than the minimum spacing required for a given pipe size. A separate MONK8A (SA, 2001) calculation was performed to demonstrate criticality safety of the cascade header pipework for the most reactive section of the pipework configuration as a bounding calculation.

The cascade header pipework calculation modeled the pipework inside a cascade hall and included a row of nearby centrifuges for interaction. Interaction with a mobile vacuum cleaner is considered unlikely as the pipes are over 3 m from the ground level. However, for conservatism, the vacuum cleaner filled with wet uranyl fluoride at optimum moderation was included and placed in the most reactive position. The vacuum cleaner was conservatively modeled as a cylinder of 66 cm in length and 20.3 cm in diameter (21.4 L), though any vacuum cleaner approved for use at the facility will be limited to 7 L in volume. Spurious reflection was modeled by wrapping 2.5 cm of water around all pipes and equipment. Flooding consideration is unnecessary because of the elevation of the pipework.

Movement of the pipework due to the effect of a seismic event was taken into account. The pipes can move a maximum of 12 mm in any direction radially from their nominal positions. All of the pipes were therefore modeled at least 24 mm closer to each other and to the centrifuges to simulate the seismic upset condition.

The results of the calculation show that the cascade header pipework is safely subcritical for normal and credible abnormal conditions for enrichment up to 6%. The maximum k_{eff} (k_{calc} + $3\sigma_{calc}$) is less than the limit of 0.95 for the credible worst-case configuration and condition, which considers interaction with fixed plant equipment (centrifuges) and a mobile vessel (vacuum cleaner) as well as movement of the pipework due to a seismic event.

3.4.3.8.4 Cascade Valve Frames

The configuration of the cascade valve frame pipework also deviates from the pipe intersection calculation described in Section 3.4.3.8.2, as some of the parallel pipes could be closer together than the required minimum spacing for a given pipe size. A separate MONK8A (SA, 2001) calculation was performed to demonstrate criticality safety of the cascade valve frame for the most reactive configuration and condition as a bounding calculation.

The calculation modeled the sections of the system which could contain enriched material including the product section of the valve frame at 6% enrichment and the contingency dump feed and tails take-off systems piping at 1.5% enrichment. Interaction with other plant equipment and mobile vessels was taken into account by modeling: (1) a conservative 21.4 L vacuum cleaner in contact with the product pipes, (2) a mobile rig simulated by the bounding product vent vacuum pump/chemical trap set with the middle chemical trap positioned in contact with the valve frame and vacuum cleaner, and (3) a mobile 14 L pump moved for maintenance in transit at 60 cm edge separation from the cascade frame. All of these interacting components were filled with wet uranyl fluoride at 6% enrichment either maximum expected or optimum moderation. Spurious reflection was modeled by wrapping 2.5 cm of water around all pipes and equipment. The cascade valve frame is located on the second floor of the process services corridor and would not be subject to flooding.

The results of the calculation show that the cascade valve frame is safely subcritical for normal and credible abnormal conditions for enrichment up to 6% for the product section, 1.5% for the contingency dump system piping and 1.5% for the remaining piping and valves (feed and tails sections). The maximum k_{eff} (k_{calc} + $3\sigma_{calc}$) is less than the limit of 0.95 for the credible worst-case configuration and condition analyzed.

Movement of the pipework and valves in the cascade valve frame due to a seismic or tornado missile event is inconsequential to criticality, as the reactivity of the system is driven by the interacting components such as the vacuum cleaner and mobile rig. Further, significant movement would result in severe damage to the cascade valve frame which would no longer retain optimally moderated uranyl fluoride or accumulate additional material to cause an inadvertent criticality.

3.4.3.8.5 Mobile Cascade Evacuation and Sampling Rig System

The Mobile Cascade Evacuation and Sampling Rig System consists of the Mobile Evacuation Rigs for cascade evacuation, and the Mobile Sampling Rigs for sampling both product and tails material from an individual cascade. These rigs are connected via the cascade valve frame. The rigs share many common features and components such as chemical traps, vacuum pump, oil adsorption filter and exhaust filter; and are very similar to the product vent vacuum pump/chemical trap set.

A nuclear criticality safety evaluation performed for the Mobile Rigs demonstrates that the criticality safety of the Mobile Rigs is bounded by the case for the product vent vacuum pump/chemical trap set described in Section 3.4.4.8.3. The evaluation considers the clustered arrangement of the components involved and compares the volume available for fissile material accumulation between the Mobile Rigs and bounding product vent vacuum pump/chemical trap set. The k_{eff} for these mobile rigs cannot exceed that of the bounding case for the product vent vacuum pump/chemical trap set.

3.4.4 (See SAR § 12.2.2.3) Product Take-off System

3.4.4.1 Functional Description

The primary function of the Product Take-off System is to provide continuous withdrawal of the enriched gaseous UF_6 product from the centrifuge cascades (REF. Figure 3.4-10, Process Flow Diabram Product Take-Off System). The product is transported via a train of vacuum pumps to chilled 30 in diameter cylinders where the UF_6 is desublimed. A secondary function of this system is to provide a means for venting light gas impurities from the enrichment process.

Under normal operating conditions, the Product Take-Off System produces small intermittent quantities of gaseous effluent from the treatment of light gas impurities in the Product Vent Subsystem. Additional small quantities of intermittent gaseous effluent are produced from purging and evacuating the flexible piping used to connect the product cylinders to the system during cylinder changeout. This effluent from the Product Vent Subsystem is routed to the Pumped Extract GEVS for further treatment. Solid wastes are produced from periodic change-out of chemical and oil traps. There is no liquid effluent directly produced in this system. Vacuum pumps are taken out of service for maintenance and the pump oil is reprocessed in the CRDB and reused.

The Product Take-off System (Ref. Figure 3.3-3, UF_6 Handling Area Equipment Locations) is located in the SBM UF_6 Handling Area and the Process Services Corridor. The Product Take-off System is operated from the Control Room, with the exception of locally controlled vacuum pump, cylinder maintenance, and preparation operations.

3.4.4.2 Major Components

The major Product Take-off System components are listed below.

A. Product Take-off System Main Header

The product take-off system main header connects each cascade to the product pumping trains. Pressure transducers in the header protect the cascades from air ingress or back flow of UF_6.

B. Product Pumping Trains

Each Cascade Hall has three product pumping trains connected in parallel. Two pump trains are on-line while the other is in standby or maintenance. Each train consists of a set of two vacuum pumps connected in series. Manual and automatic valves isolate each pump set. The pump train transports the UF_6 product from each cascade to the Product Low Temperature Take-off Stations.

C. Product Low Temperature Take-off Stations

The Product Low Temperature Take-off Station (LTTS) consists of a composite-wall insulated box. The Product LTTS panels have a non-flammable insulated core, and are vapor sealed to prevent ice build-up within the insulation. The Product LTTS is designed to prevent ice build-up within the box. The Product LTTS totally encloses the cylinder, cylinder support structure, and rails. The front of the Product LTTS has a single door through which the cylinder is inserted and removed. The back of the Product LTTS has an opening through which the cylinder is connected to the UF_6 piping. The cylinder valve and inlet piping are electrically heated. The door frames, access port, rubber collar, and defrost condensate piping are provided with heat tracing to prevent ice build-up.

Each Product LTTS has a chiller unit, which is mounted on the top of the Product LTTS. This unit provides the cold air necessary to decrease the temperature in the box sufficiently to remove the thermal energy from the UF_6 gas and cause it to desublime in the cylinder. The chiller unit has a defrost cycle to remove ice from the cooling coils. This is done with a defrost heater at the coils. Condensate from the chiller is routed to a safe-by-design drip pan to allow the water to evaporate.

The valves used to route the product to the appropriate Product LTTS, or for venting and purging, are mounted in a valve frame near each Product LTTS.

Each Product LTTS is provided with a weighing system, which incorporates a weigh frame, four load cells, and associated weighing instrumentation. The weigh system provides continuous measurement of the mass of UF_6 accumulating in the product cylinder.

D. Product Vent Subsystem

The Product Vent Subsystem consists of a product vent transfer header, two horizontal UF_6 cold traps, two heater/chiller units, two automatic control valves, and two vacuum pump/chemical trap sets. These components are discussed below.

1. UF_6 Cold Traps with Heater/Chiller Units.

Each UF_6 cold trap consists of an insulated horizontal tube with internal baffles and a dedicated heater/chiller unit. Each heater/chiller unit contains approximately 70 L (19 gal) of silicon oil, as the heat exchange media, which circulates around each cold trap. These Product Vent Subsystem heater/chiller units are separated by over 30 m (100 ft) from other heater/chiller units in similar subsystems. The UF_6 cold trap is chilled to cause UF_6 in the vent gases to desublime. It is heated to sublime the trapped UF_6 for transfer back to a product cylinder. Each end of the UF_6 cold trap is heat traced to prevent the UF_6 from desubliming and blocking the inlet and outlet. The heat tracing also prevents ice from building up on the outside of the UF_6 cold trap and affecting the weighing system.

Each UF_6 cold trap is provided with a weighing system, which incorporates a weigh frame, four load cells, and associated weighing instrumentation. The weigh system provides continuous measurement of the mass of UF_6 accumulating in the UF_6 cold trap and indicates when it is full to prevent overfilling.

2. Vacuum Pump/Chemical Trap Sets.

The vacuum pump/chemical trap set consists of a carbon trap, two aluminum oxide traps, and an insulated vacuum pump with internal nitrogen purge and an aluminum oxide oil traps on the pump suction and mechanical oil trap (exhaust filter) on the pump discharge. The exhaust from the vacuum pump goes to the Pumped Extract GEVS.

The activated carbon removes small traces of UF_6. The aluminum oxide removes HF. The oil traps prevent oil migration both upstream and into the Pumped Extract GEVS.

E. Assay Sampling System

Product Assay Sample piping installed on the product header after the product pumping trains allows a product assay sample to be collected in a sample bottle. Because the output from all centrifuges in a cascade hall eventually go to a single product (or tails) header, an "assay" is the output of all the cascades in that cascade hall. For example, SBM-1001 Assay 1001 is the output from all of the cascades in SBM-1001 Cascade Hall 1. The sample system is comprised of automatic and manual valves, nitrogen purging, and an evacuation pump and trap (Assay Sampling Rig) set similar to the one described above. However, this set contains one mixed-bed trap containing both activated carbon and aluminum oxide. This pump/trap set also contains a flow restriction device (IROFSC21) on the suction side of the pump. A temperature instrument prevents the mixed-bed trap from overheating. The sensor monitors the mixed-bed trap temperature. If the high temperature trip setpoint is reached, an alarm is activated.

F. On-line Mass Spectrometer System

The On-line Mass Spectrometer System piping connection installed on the product header, after the product pumping trains, allows a small gas sample to be fed to an on-line mass spectrometer. The on-line mass spectrometer analysis results allow any required adjustments to be made to the cascades.

G. Mobile Maintenance Rig

The Mobile Maintenance Rig is provided to evacuate pipework, plant equipment, and UF_6. The mobile maintenance rig can connect to a cascade at the cascade valve station or other locations as necessary to support maintenance activity where evacuation of the pipework, plant equipment is required. The Mobile Maintenance Rig can be used in conjunction with other mobile rigs such as the Helium Leak Test Cart. Each Mobile Maintenance Rig consists of three assemblies. The cold trap assembly consists of K300 cold trap, liquid nitrogen dewar, associated valves and piping. The chemical trap assembly consists of one mixed-bed trap (containing both activated carbon and aluminum oxide), pressure instruments, chemical trap temperature instrument, piping and valves. The pump assembly contains a roots vacuum pump and a rotary vane vacuum pump with an aluminum oxide oil trap on the pump suction and a mechanical oil trap (exhaust filter) on the pump discharge. The assemblies are connected together using flexible piping. The Mobile Maintenance Rig's exhaust is connected to the Pumped Extract GEVS.

During use, the evacuated contents from the pipework / equipment are initially pumped either through a cold trap when UF_6 is expected or into the chemical trap assembly bypassing the cold trap when minimal qualities of UF_6 are expected. The activated carbon removes small traces of UF_6. The aluminum oxide trap removes HF. The oil traps prevent oil migration both upstream and into the Pumped Extract GEVS.

The chemical trap temperature instrument prevents the mixed-bed trap from overheating. The sensor monitors the mixed-bed trap temperature. If the high temperature trip setpoint is reached, an alarm is activated and the rig's pumps are tripped off.

Although the Mobile Maintenance Rig is described here in the product take-off system section, it should be noted that it is utilized throughout the UF_6 process system, e.g., feed, cascade, tails, product blending, contingency dump systems, etc., and UF_6 containing systems in the CRDB. For discussion of the criticality evaluation for this rig see Section 3.4.4.8.7.

3.4.4.3 Design Description

The design bases and specifications are given in Table 3.4-4, Product Take-off System Design Basis. Applicable Codes and Standards are given in Table 3.4-5, Product Take-off System Codes and Standards.

The Product Take-off System is dedicated to an individual Cascade Hall. The system is designed to continuously remove the enriched UF_6 product from the cascades under all operating conditions.

The entire Product Take-off system operates at subatmospheric pressure. In the event of a containment failure (e.g., pipe leak), releases of UO_2F_2 and HF is greatly minimized because air would migrate into the system rather that UF_6 pouring out of the system. This important safety feature greatly limits the likelihood of exposures.

There are five Product LTTS for each Cascade Hall. Of these five, two are on-line during normal operation. Two of the remaining three Product LTTSs are in standby auto. One of these Product LTTS is automatically switched to on-line when one of the two on-line cylinders is full. The fifth station is in standby (cylinder inside station but not on automatic), off-line, preparation (cylinder being removed or inserted), or maintenance mode.

Gaseous UF_6 product from the cascades flows from each centrifuge cascade, through the product main header, to the pumping trains. Typical main header pressures are on the order of a few mbar.

From the product pumping trains the UF_6 flows to the product cylinders housed in the Product LTTSs. The transfer header pressure is limited to 80 mbar (32.1 in. H_2O) to prevent UF_6 desublimation at ambient temperatures. Building ambient temperature is maintained above 18°C (64.4°F) so that heat tracing of the UF_6 transfer piping is not required.

Light gas impurities normally exit the centrifuges with the product rather than with the tails. To remove these impurities, the product cylinders are vented using a standby cylinder and the Product Vent Subsystem.

During production it is necessary to measure the concentration of the product or tails being produced. The operator can collect a sample for manual analysis using the Assay Sampling System or automatically measure the concentration using the On-line Mass Spectrometer System.

Materials of construction and fabrication specifications for the equipment and piping used in the Product Take-off System are compatible with UF_6 at the operating conditions and have been proven by over 30 years of use in existing Urenco European enrichment plants.

3.4.4.4 Interfaces

The Product Take-off System interfaces with the following systems and utilities.

A. Cascade System
B. Pumped Extract GEVS
C. Nitrogen System
D. Plant Control System
E. Compressed Air System
F. Electrical System
G. Hoisting and Transportation Equipment.

3.4.4.5 Design and Safety Features

The Product Take-off System is designed and constructed to provide safe operation for plant personnel as well as the general public. Principal design features are as follows:

A. All piping, vessels, and pumps in the Product Take-off System operate at sub-atmospheric UF_6 pressures.

B. Piping is all welded construction and process valves are bellows sealed.

C. Before carrying out any disconnections or connections of equipment, the piping is evacuated and purged with nitrogen. Flexible exhaust hoses connected to the Pumped Extract GEVS via a temporary local extract cross-connection, during initial plant operations, remove any releases from the work area.

D. Before discharge to the Pumped Extract GEVS, all gases flow across activated carbon and aluminum oxide to remove any traces of UF_6 and HF via the product vent vacuum pump/chemical trap set.

E. Temperature in each Product LTTS is monitored and controlled.

F. Product cylinder overfill is prevented by two weight trips. The first is at the desired net weight of UF_6 and the second is at the gross weight of the cylinder with UF_6 contents. Only the first trip is operator adjustable.

G. Removal of a connected product cylinder from the Product LTTS is prevented by an interlock system. Unless the flexible hose on the cylinder valve has been removed and locked in its "holster," a physical barrier prevents the cylinder transporter drawbridge from docking with station rails, thereby preventing cylinder removal.

H. Hydrocarbon lubricants are not used in any pumps. All pumps are lubricated with perfluorinated polyether (PFPE) oil, a fully fluorinated synthetic oil.

I. Temperature and weight in the product vent vacuum pump/chemical trap set carbon trap are monitored and a trip on weight and a trip on temperature stops the product vent vacuum pump.

J. Mechanical interlocking systems are provided in all solid feed and low temperature stations to prevent the operation of the stations with an incorrect cylinder type loaded. The system prevents the use of identified for product take-off from being used in either a solid feed station or feed purification station.

3.4.4.6 Operating Limits

The Product Take-off System has the capacity to remove the UF_6 product on a continuous basis from the cascades at all rates under normal operating conditions.

3.4.4.7 Instrumentation

The process variables, such as pressure, temperature, and valve position, are automatically controlled. Deviations from the specified values are detected and indicated by a two level alarm system. An alarm, the operator has the ability to manipulate the process to restore it to normal. A second alarm, automatic action is taken to provide system protection. For safety, system protection, and operability, sensors may be duplicated (one out of two action) or triplicated (one out of three action). Action is initiated if any one out of two or three sensors reach alarm levels.

A. Main Header

The product main header pressure is monitored with three pressure sensors. A high alarm is set to give operator warning of high pressure. A high high (HH) alarm signals the Cascade System that the product main header is not available.

B. Product Pumping Trains

Each product pumping train inlet pressure is monitored. Normal operating pressure is <2 mbar (<0.8 in H_2O). A high (H) alarm (H) warns the operator of high pressure. A high high (HH) alarm automatically closes the inlet and outlet valves and trips the pump train off-line to protect against air leakage into the cascades.

The outlet pressure of each product pumping train is monitored. Normal operating pressure is <55 mbar (<22.1 in H_2O). An alarm provides the operator warning of high pressure. A second alarm automatically closes the inlet and outlet valves and trips the pump train off-line.

C. Product Low Temperature Take-off Stations

Each product cylinder inlet pressure is monitored. Normal operating pressure is <50 mbar (<20.1 in H_2O). An alarm is set to automatically initiate the timed cylinder venting sequence. A second alarm warns of high pressure. A third alarm closes the Product LTTS inlet valve and trips the Product LTTS off-line.

For weight control, each Product LTTS has a weighing system consisting of four load cells and a transmitter to monitor the contents of the product cylinder. A weight of less than 800 kg (1,764 lb) indicates no cylinder present in the Product LTTS. The first alarm, set at the net allowable weight of UF_6 in the product cylinder, promotes a standby Product LTTS to on-line and closes the Product LTTS inlet valve to prevent overfilling. A second alarm, set at the gross allowable weight of the product cylinder filled with UF_6, also closes the inlet valve and trips the Product LTTS off-line. The output of the weighing system also allows cylinder weight to be verified to be within specified trending limits.

For temperature control and protection from high temperatures, the Product LTTS has a stand-alone control and protection system. The total system consists of three sensors. For main Product LTTS temperature control, one sensor is mounted in the air return to the chiller unit and monitors the circulating air temperature. This sensor and local control maintains the Product LTTS temperature . In addition to controlling the Product LTTS temperature, one output is monitored by the Plant Control System and warns when the air temperature rises. This would indicate a chiller failure or that the defrost heater is not functioning properly. When the defrost heater is on, the circulating air fan is off to minimize the increase in Product LTTS air temperature.

In addition to the closed loop control system previously described, there are two independent and diverse temperature protection instruments. These provide extra safety margin to protect against increases in temperature that may occur if the heater control did not operate properly. The first instrument is a fail-safe hardwire RTD and the second instrument is a fail-safe thermocouple. Both of these instruments measure the temperature of air inside the LTTS. Both of these instruments will trip the defrost heater and fan power supply in the event the air temperature rises above their set point. If heater trip occurs from these two instruments, the Product LTTS is automatically taken off-line and put into a standby mode.Both instruments are set to trip at set points well below the calculated set point required to ensure cylinder integrity.

To prevent UF_6 desublimation in the product cylinder valve, the valve and inlet piping are electrically heated.

D. Product Vent Subsystem

1. UF_6 Cold Traps

The vent header pressure, between the Product LTTS and the UF_6 cold traps, is monitored. During the vent sequence the normal pressure is at or below 50 mbar (20.1 in. H_2O). During the gas back sequence, when UF_6 is sublimed in the UF_6 cold trap for transfer back to a product cylinder, the header pressure is at the UF_6 vapor pressure. A gas back first alarm warns of high pressure. A second alarm closes the Product LTTS vent valve to prevent flow back into the Product Take-off System.

During venting operation, the product vent UF_6 cold trap outlet pressure is monitored. A low alarm set at 20 mbar (8. in. H_2O) indicates the UF_6 cold trap is empty in gas back mode. A second low alarm level closes UF_6 cold trap outlet valve automatically to prevent UF_6 flow to vacuum pump. A first high alarm warns of high pressure. A second high alarm switches the heater/chiller unit off, trips the UF_6 cold trap off-line, and closes the outlet valve.

A pressure sensor and control valve between each UF_6 cold trap and its vacuum pump/chemical trap set restricts the flow of light gases through the UF_6 cold trap to ensure all UF_6 desublimes and does not reach the carbon trap. The line pressure into the vacuum pump/chemical trap set is controlled.

A weighing system monitors the contents of the UF_6 cold trap. An alarm warns that the UF_6 cold trap is approaching capacity. A second alarm closes the UF_6 cold trap inlet and outlet valves and the UF_6 cold trap is switched off-line.

The temperature of the UF_6 cold trap is controlled during cooling to desublime any UF_6 and for heating during sublimation to empty the UF_6 cold trap of collected UF_6 (gas back). A low alarm warns of a chiller unit fault. A high alarm closes the UF_6 cold trap outlet valve and a second high alarm warns of high temperature during gasback. The final high alarm trips the unit off-line to avoid desublimation of UF_6 in the header.

2. Vacuum Pump/Chemical Trap Sets.

The carbon trap has a temperature instrument that prevents overheating. If the high temperature setpoint is reached, a signal is sent to the PCS to warn the operator of the abnormal condition.

The second (downstream) activated aluminum oxide (Al_2O_3) trap on the vacuum pump/chemical trap set is equipped with a weigh system. The weigh system on the aluminum oxide trap only displays a weight locally. There is no control function on this weight indicator.

Increase in weight is an indication that the first Al_2O_3 trap is saturated. The traps are replaced based on the accumulated weight.

E. Assay Sampling Subsystem.

The assay sampling header pressure is monitored to prevent air entering the Product Take-off System and Tails Take-off System. A high level alarm closes the assay sampling inlet valves. The sample inlet valves (product and tails) and the sample evacuation valve are interlocked, allowing only one of the valves to be open at any one time. Both sample inlet valve open cycles are timed.

3.4.4.8 Criticality Safety

3.4.4.8.1 Product Cylinders

The product enrichment within a 30B product cylinder is limited to 5.0 $^{w}/_{o}$ ^{235}U by the plant design, configuration and operating features. The UF_6 content is limited to no more than the 30B cylinder fill limit by the plant design and operating features. The moderation within the cylinder is controlled by a series of plant operating features. These features include, among others, checks that the cylinder is clean and empty prior to the commencement of fill. Also, the moderator (H_2O, HF) entering the cylinder is monitored during the time the cylinder is connected to the plant UF_6 systems.

The criticality analysis with MONK8a (SA, 2001) models effectively infinite two-dimensional arrays of full 30B product cylinders. Inside each cylinder a spherical region of 6% enriched UO_2F_2/water mixture having a radius at optimum H/U ratio is located at the end of the cylinder. The remainder of the interior of the cylinder is assumed to be filled with 6.0% ^{235}U enriched low density UF_6 with no moderator (water). Cylinders in the arrays are placed with the valve and base ends alternately in contact, so that the moderated region in a given cylinder is in the closest possible proximity to the moderated region in an adjacent cylinder. All cylinders are considered to be lying on a concrete pad one meter thick. Sphere moderation is varied to obtain the optimum H/U ratio. Worst-case external reflection/moderation conditions are found by varying the density of the interstitial water between cylinders to simulate foam, mist, frost, or snow. The calculation also assumes one transient 30Bcylinder above (touching) the array to simulate movement in/out/over the array. Criticality safety of Type 30B product cylinders depends on the control of moderator content.

The criticality analysis for flooding up to 60 cm of water shows that a base array of 30B product cylinders with a transient 30B cylinder directly on top remains safe (i.e., $k_{eff} < 0.95$) under all conditions analyzed.

For the 30B cylinder, the condition that met the upper safety limit had an H/U ratio of 10.5 with an interstitial water density of 0.10 g/cm3 (6.24 lb/ft3). Thus, the maximum safe mass of hydrogen in each type product 30B cylinder in an array was determined to be 0.98 kg (2.16 lb) present in the form of 8.8 kg (19.4 lb) of water.

3.4.4.8.2 UF_6 Cold Traps

Although the cold traps have a large internal volume they are individually safe by shape, the trap body having an internal diameter of 20.3 cm (8.0 in). This compares with the safe diameter of 22.4 cm (8.82 in) for 6.0 $^{w}/_{o}$ enrichment. Individual cold traps are thus safe in isolation for any uranyl fluoride/water mixture. In practice the maximum H/U atom ratio in the cold traps will be 7; however, a sensitivity study is performed to determine the optimum H/U ratio, providing an additional margin of safety.

The cold trap and the standby cold trap are separated from each other by center-to-center separation of 110 cm (43.3 in). Calculations were performed on the isolated pair of completely filled cold traps and were found to be substantially subcritical. The calculations assumed an enrichment of 6.0 $^{w}/_{o}$, an optimum H/U ratio of 14 and 2.5 cm (0.984 in) water reflection placed around the outer surfaces of the trap to simulate spurious reflection.

There are no restrictions on movement of mobile vessels in regard to the cold traps.

For interaction, MONK8A (SA, 2001) bounding calculations were performed in which both cold traps are brought together and a 7 L vacuum cleaner is in contact with, and placed below, both of the cold traps, and another vessel (a 14 L (3.7 gal) product vent vacuum pump) is at 60 cm (23.6 in) edge spacing from one of the cold traps. The cold traps, vacuum cleaner and mobile pump were all filled with uranyl fluoride/water mixture at 6% enrichment with optimum moderation (H/U=12). Spurious reflection with 2.5 cm of water for each component was modeled. Flooding up to 60 cm of water was included. The resulting k_{eff} is less than the limit of 0.95, meeting the subcriticality safety requirement

The cold traps have therefore been determined to be safe both as a pair in isolation and touching while interacting with other fixed plant or vessels in movement for ^{235}U enrichments up to 6.0 $^{w}/_{o}$.

3.4.4.8.3 Vacuum Pump / Chemical Trap Sets

The components of the Product Vent Subsystem are individually safe-by-design per Tables 3.7-7. The entire Subsystem is safe by design by physical arrangement as demonstrated by MONK8A (SA, 2001) calculations. The MONK8A model included the following process equipment: a carbon chemical trap, two alumina oxide chemical traps , oil adsorption filter, exhaust filter, and rotary vane pump. Transient components include a 7L vacuum cleaner, and a mobile pump or pump set (18 L mobile volume or the Leybold WS1001/251 roots pump set).

The process equipment was filled entirely with uranyl fluoride/water at an enrichment of 6.0 $^{w}/_{o}$ and worst credible H/U ratio of 7 for process conditions. The transient components were modeled with an optimized H/U ratio of 12. The internal structure or fill material was not credited within any components. This model maximized the mass of fissile material within the components and provides added conservatism.

The components were arranged in a configuration to represent seismic upset conditions or impacts from missiles (tornado or construction). The chemical traps were placed as close as physically possible and the remaining components were clustered together. This arrangement maximized the effects of neutron interaction between the components. Neutron interaction between uranium bearing transient components was considered by modeling a 7 L vacuum cleaner in contact with the chemical traps and either a single 18 L volume or a product Roots pump set (Leybold WS1001/251 pumps) in contact with the vacuum cleaner. The standby product vent subsystem was included in the model. Spurious reflection of 2.5 cm water around each component was modeled. Flooding to 60 cm was included in the model to represent extreme conditions.

The vacuum pump/chemical trap sets have been shown to be safe (i.e., $k_{eff} < 0.95$) under normal and credible abnormal conditions for enrichments up to 6.0 $^{w}/_{o}$. The vacuum cleaner is limited to 7 L. It has HEPA filtration on the exhaust, and will be dedicated for cleaning operations where uranic material is involved and will be marked clearly. Transient components allowed within the 60 cm spacing are limited to a volume of 18 L or the product Roots pump set (Leybold WS1001/251). Movement of components due to seismic, tornado missile and onsite construction events would not lead to an inadvertent criticality.

It should be noted that the above MONK8A (SA, 2001) model represents extreme accident conditions in terms of uranium accumulation and moderator ingress. It should also be noted that the simple MONK8A (SA, 2001) model used for the vacuum pump in all of the calculations is conservative. Since the real shape of the internal free volume is far from optimum, an explicit model of the pump is expected to result in a significant reduction in k_{eff}.

3.4.4.8.4 Product Pumping Train UF_6 Pumps

The pump combination unit consists of two Leybold pumps, models WS1001 series and WS251 series, positioned in a fixed frame. The WS251 series has a nominal volume of 6.6 L (1.75 gal). The WS1001 series pump has a nominal volume of 16.6 L (4.4 gal).MONK8A (SA, 2001) calculations were performed to show the criticality safety of the Leybold WS1001/WS251 product roots pump combination at 6% enrichment. From this analysis, the pump combination in isolation meets the subcritical acceptance criteria.

To simulate the product pumping trains, the Roots pumps were modeled as equiaxed cylinders (equal length and diameter) with volumes slightly larger than the maximum theoretical free volumes of the largest pump. Tolerances were taken into account, as was the 0.4 cm thickness of the iron casing. The WS1001 pump was rounded up to a volume of 17.6 litres and the WS251 was modeled at the same volume. Spurious reflection due to walls, personnel, etc. was taken into account by applying 2.5 cm of water reflection to all vessels in the model.

The analysis bounds interaction with mobile vessels, mobile rigs and the effect of a seismic or tornado missile event. Multiple pump sets were modeled in a conservative configuration by an infinite one-dimensional array of pump sets with a 7 L vacuum cleaner inserted between each consecutive pair. This configuration bounds a linear array of pump sets, as the inserted vacuum cleaner is a significant contributor to the system reactivity. For this configuration, it is unnecessary to include flood water as the product pumping trains are located on the second floor of the process services corridor, and flooding due to local intense precipitation is a separate external event. The resulting k_{eff} is less than 0.95, confirming the modeled scenario meets the subcritial acceptance criteria for a seismic or tornado event. All of the components in the model were filled with wet uranyl fluoride at 6% enrichment and optimum moderation. Spurious reflection was taken into account by modeling 2.5 cm of water around the vacuum cleaner and mobile pumps. The effect of flooding up to a water depth of 60 cm was added for conservatism, despite that the product pumps are located on the second floor of the process services corridor which could not be subject to flooding.

The combination of the pump set and interacting units results in $k_{eff} < 0.95$. It should be noted that the pumps are individually safe by volume as the safe volume for 6% enriched uranyl fluoride is 19.3 liters.

Note that the movement of vessels considered above is considered to be part of normal operating conditions. The abnormal operating condition pertaining to the vessels concerns the assumption that all the vessels are completely filled with uranic breakdown at optimum moderation. This would be extremely unlikely for a single vessel in the array, and even more unlikely for more than one vessel.

It can be concluded that:

- An array of pump units is safe at any spacing. No restriction is placed on the moderator content of the pump units.
- There is no separation required between the Pumping Trains and any other mobile rig or mobile vessel. No restriction is placed on the moderator content of any of the vessels.

3.4.4.8.5 Process Gas Pipework

During normal operations, the Process Gas Pipework contains gaseous UF_6. The gaseous UF_6 stream flows out of the cascade and into the Process Gas Pipework. Through the Process Gas Pipework, the flow passes via the product and tails Roots pumps into the product and tails take-off cylinders in the UF_6 Handling Area.

The pipe intersection criticality calculation described in Section 3.4.3.8.2 is for a generic piping arrangement. This calculation does not bound the configuration of the process gas piping in the Process Services Corridor because the parallel pipes are closer together than the minimum spacing required for a given pipe size. A separate MONK8A (SA, 2001) analysis was performed to demonstrate criticality safety of the Process Gas Pipework for the most reactive section of the pipework configuration as a bounding calculation.

To simulate abnormal operating conditions, calculations were performed in which the Process Gas Pipework was filled entirely with wet uranyl fluoride at optimum moderation. The enrichment used for each pipe was 1.5% for pipes that could contain dump material, and 6% for product and feed pipes to bound multiple piping configurations. Spurious reflection was modeled by 2.5 cm of water around each pipe.

The calculations included the gas pipework in the following areas: Process Services Corridor (PSC), Assay Sampling Station at the end of the PSC, Product Valve Stations in the UF_6 Handling Area, and Tails Valve Stations in the UF_6 Handling Area. Based on the MONK8A calculations, the pipework in the PSC represents the most reactive configuration. In all cases, k_{eff} is less than the limit of 0.95.

3.4.4.8.6 Assay Sampling Rig

The Assay Sampling Vacuum Pump and Trap set (referred to as the Assay Sampling Rig) consists of manual and automatic isolation valves, a mixed bed chemical trap, a rotary vane vacuum pump, an Al_2O_3 oil adsorption filter and an exhaust filter. Each individual component is safe-by-design by physical size (diameter or volume). The Rig is very similar to the product vent vacuum pump/chemical trap set. The Rig as a whole is safe-by-design by physical arrangement as demonstrated in a nuclear criticality safety evaluation through comparison to a bounding calculation performed for the product vent vacuum pump/chemical trap set described in Section 3.4.4.8.3.

3.4.4.8.7 Mobile Maintenance Rig

The Mobile Maintenance Rig used consists of a K300 cold trap assembly, a chemical trap assembly, and a pump assembly containing a WSU 251 roots pump, a rotary vane pump, an Al_2O_3 oil filter and an exhaust filter. The Mobile Maintenance Rig is used to evacuate pipework and equipment that has been exposed to UF_6 and HF prior to maintenance. The evacuated contents are pumped through a cold trap and chemical traps for removal on any UF_6 and HF and exhaust to the Gaseous Effluent Ventilation System.

The items on the Mobile Maintenance Rig are safe-by-design individually. The Mobile Maintenance Rig as a whole is safe-by design by physical arrangement as demonstrated in a nuclear criticality safety evaluation through comparison to a bounding calculation performed for the product vent vacuum pump/chemical trap set described in Section 3.4.4.8.3.

3.4.4.8.8 (See SAR § 12.2.1.1.5) Mobile Pressure Transducer Calibration Rig

The mobile Pressure Transducer Calibration Rig consists of manual and automatic valves, a number of digital pressure transducers, a pirani-type pressure measurement device, a mixed-bed chemical trap, two rotary vane vacuum pumps, and a turbo-molecular vacuum pump. The Calibration Rig allows for the calibration of pressure transducers located throughout the UF_6 process systems to monitor process pressures. The items on the Calibration Rig are safe-by-design individually. The Calibration Rig as a whole is safe-by-design by physical arrangement as demonstrated in a nuclear criticality safety evaluation through comparison to a bounding calculation performed for the product vent vacuum pump/chemical trap set described in Section 3.4.4.8.3.

3.4.4.8.9 On-Line Mass Spectrometer

The Online Mass Spectrometer consists of manual and automatic isolation valves, a vacuum chamber, cold traps, manual sampling manifolds, automatic sampling batch chambers, quadrupole mass spectrometer, an ion vacuum pump, a rotary vane vacuum pump, and a diffusion vacuum pump. The Mass Spectrometer Room on the second floor of the SBMs contains one Online Mass Spectrometer, sufficient for sampling SBM Assay 1001 and 1002.

A nuclear criticality safety evaluation concludes that the Product Vent Pump / Chemical Trap Set (Section 3.4.4.8.3) analysis and the Product Roots Pumps analysis (Section 3.4.4.8.4) envelope the configuration and conditions for the Mass Spectrometer and that the k_{eff} of the Mass Spectrometer could not exceed that of the cases described. Therefore, the Mass Spectrometer is safe-by-design, meeting the subcriticality requirements.

3.4.4.8.10 Helium Leak Test Cart

The Helium Leak Test Cart is described in Section 3.4.2.2.F A criticality event is not credible for the Helium Leak Test Cart due to the sequence of many unlikely human errors that are required to introduce enriched UF_6 into the Helium Leak Test Cart system.

3.4.5 (See SAR § 12.2.2.4) Tails Take-off System

3.4.5.1 Functional Description

The primary function of the Tails Take-off System is to provide continuous withdrawal of the gaseous UF_6 tails from the centrifuge cascades (Ref. Figure 3.4-11, Process Flow Diagram Tails Take-off System). The tails are transported via a train of vacuum pumps to 48-in diameter cylinders where the UF_6 gas is desublimed. A secondary function of this system is to provide a means for evacuating centrifuge cascades under abnormal operating conditions. Most of the light gases from the separation process are discharged into the product stream, so venting of the tails take-off system is seldom necessary.

Small, intermittent quantities of gaseous effluent are produced from purging and venting the flexible piping used to connect the UBCs (ie., 48Y Tails) to the system during cylinder changeout. This effluent is treated by the Tails Evacuation Pump/Chemical Trap Set to remove UF_6 or HF before being routed to the Pumped Extract GEVS for further treatment. Solid wastes are produced from periodic change-out of chemical and oil traps. There is no liquid effluent directly produced in this system. Vacuum pumps are taken out of service for maintenance and the pump oil is reprocessed in the CRDB and reused.

The Tails Take-off System is located in the UF_6 Handling Area and Process Services Corridor of the SBM (Ref. Figure 3.3-3 UF_6 Handling Area, Equipment Locations). The equipment is operated from the Control Room with the exception of maintenance and preparation activities, which are controlled locally.

3.4.5.2 Major Components

The Tails Take-off System major components are:

A. Primary Header

The tails primary header connects each cascade to the Tails Pumping Trains. Pressure transducers in the header protect the cascades from air ingress.

B. Tails Pumping Trains

Each cascade has two dedicated Tails Pumping Trains connected in parallel. One pump train is on-line while the other is in standby. Each train has one set of pumps andeach set consists of two vacuum pumps in series mounted on a common frame. Manual and automatic valves isolate each pump set.

C. Secondary Header

Tails Pumping Trains discharge into the secondary header. The secondary header connects with the Tails Low Temperature Take-off Stations.

D. Tails Low Temperature Take-off Stations (LTTS)

The Tails LTTS consists of a composite-wall insulated box. The Tails LTTS panels have a non-flammable insulated core, and are vapor sealed to prevent ice build-up within the insulation. The Tails LTTS is designed to prevent ice build-up within the Tails LTTS. The Tails LTTS totally encloses the cylinder, cylinder support structure, and rails. The front of the Tails LTTS has a single door through which the cylinder is inserted and removed. The back of the Tails LTTS has an opening through which the cylinder is connected to the UF_6 piping. The cylinderet piping are electrically heated. The door frames, access port, rubber collar, and defrost condensate piping are provided with heat tracing to prevent ice build-up.

Each Tails LTTS has a chiller unit, which is mounted on the top of the Tails LTTS. This unit provides the cold air necessary to decrease the temperature in the box sufficiently to remove the thermal energy from the UF_6 gas and cause it to desublime in the cylinder. The chiller unit has a defrost cycle to remove ice from the cooling coils. This is done with a defrost heater at the coils.

The valves between the secondary header and the Tails LTTS are mounted in separate frames that are not attached to the Tails LTTS; however, they are in close proximity.

Each Tails LTTS is provided with a weighing system which incorporates a weigh frame, four load cells, and associated weighing instrumentation. The weigh system provides continuous measurement of the mass of UF_6 accumulating in the 48Y UBC.

E. Tails Evacuation Pump/Chemical Trap Set

The Tails Evacuation Pump/Chemical Trap Set consists of a mixed bed (activated carbon an aluminum oxide (Al_2O_3)) trap, and an insulated vacuum pump with an aluminum oxide oil trap on the pump suction and a mechanical oil trap (exhaust filter) on the pump discharge. A flow restrictor (IROFSC21) is located on the suction of the pump after the aluminum oxide oil trap. The exhaust from the vacuum pump goes to the Pumped Extract GEVS.

The activated carbon in the mixed bed trap removes small traces of UF_6 and the aluminum oxide removes HF. The oil traps prevent oil migration both upstream and into the Pumped Extract GEVS.

F. Assay Sampling Subsystem

Piping is installed in the secondary header for sampling. The tails assay sample is taken into sample bottles at this point. The sample system is comprised of automatic and manual valves, nitrogen purging, and an evacuation pump and trap set (Assay Sampling Rig) similar to the one described above. However, this set contains one mixed-bed trap containing both activated carbon and aluminum oxide. This pump/trap set also contains a flow restriction device (IROFSC21) on the suction side of the pump.

G. On-line Mass Spectrometer System

Piping is installed in the secondary header to allow a small gas sample to be fed to an on-line mass spectrometer. The results of the mass spectrometer analysis are used to make process adjustments to the cascades.

3.4.5.3 Design Description

The design bases and specifications are given in Table 3.4-6, Tails Take-off System Design Basis. Applicable Codes and Standards are given in Table 3.4-7, Tails Take-off System Codes and Standards.

The Tails Take-off System is dedicated to an individual Cascade Hall. The system is designed to continuously remove depleted UF_6 (tails) from the cascades under all operating conditions. The entire Tails Take-off System operates at subatmospheric pressure. In the event of a confinement barrier failure (e.g., pipe leak), releases of UO_2F_2 and HF is greatly minimized because air would migrate into the system rather than UF_6 exiting the system. This important safety feature greatly limits the likelihood of worker and public exposures.

There are eleven Tails LTTSs for each Cascade Hall. Of these, seven are on-line during normal operation. These seven are adequate for normal operations as well as peak flows generated during a cascade trip. One Tails LTTS is in standby auto. This Tails LTTS is automatically switched to on-line when one of the seven on-line cylinders is full. The remaining Tails LTTS are in either standby manual (cylinder inside station but not on automatic), off-line, preparation (cylinder being removed or inserted), or maintenance mode.

Gaseous UF_6 tails from the cascades flows from each centrifuge cascade, through the primary header, to the tails pumping trains. Typical primary header pressures are of the order of a few mbar (in. H_2O).

From the tails pumping trains the UF_6 flows through the secondary header to the UBCs housed in the Tails LTTSs. The secondary header pressure is limited to prevent UF_6 desublimation at ambient temperatures. Building ambient temperature is maintained so that heat tracing of the UF_6 piping is not required.

All components of the Tails Take-off System operate at subatmospheric pressure. Release of UF_6 and/or HF is unlikely because leakage, if it were to occur, would be inward to the system.

Materials of construction and fabrication specifications for the equipment and piping used in the Tails Take-off System are compatible with UF_6 at the operating conditions and have been proven by over 30 years of use in existing Urenco European enrichment plants.

3.4.5.4 Interfaces

The Tails Take-off System interfaces with the following systems and utilities:

A. Cascade System
B. Plant Control System
C. Nitrogen System
D. Compressed Air System
E. Pumped Extract GEVS
F. Electrical System
G. Hoisting and Transportation Equipment.
H. Contingency Dump

3.4.5.5 Design and Safety Features

The Tails Take-off system is designed and constructed to provide safe operation for plant personnel as well as the general public. Principal design features are as follows.

A. All piping, vessels, and pumps in the Tails Take-off System operate at sub-atmospheric UF_6 pressures.

B. Piping is all welded construction and process valves are bellows sealed.

C. Before carrying out any disconnections or connections of equipment, the piping is evacuated and purged with nitrogen. Flexible exhaust hoses connected to the Pumped Extract GEVS via a temporary local extract cross-connection, during initial plant operations, remove any releases from the work area.

D. Before discharge to the Pumped Extract GEVS, all gases flow across activated carbon and aluminum oxide to remove any traces of UF_6 and HF via the Tails Evacuation Pump/Chemical Trap Set.

E. Temperature in each Tails LTTS is monitored and controlled.

F. Cylinder overfill is prevented by two weight trips. A trip is at the desired net weight of UF_6 and a second trip is at the gross weight of the cylinder with UF_6 contents. Only the first trip is operator adjustable.

G. Removal of a connected cylinder from the Tails LTTS is prevented by an interlock system. Unless the flexible hose on the cylinder valve has been removed and locked in its "holster," a physical barrier prevents the cylinder transporter drawbridge from docking with station rails, preventing cylinder removal.

H. Hydrocarbon lubricants are not used in any pumps. All tails pumps are lubricated with perfluorinated polyether (PFPE) oil, a fully fluorinated synthetic oil.

I. Temperature in the Tails Evacuation Pump/Chemical Trap Set mixed bed trap is monitored and controlled.

3.4.5.6 Operating Limits

The Tails Take-off System will have the capacity to remove the UF_6 tails on a continuous basis from the cascades at all rates under normal operating conditions. The system will also have the capacity to evacuate the full flow of UF_6 from the cascades under abnormal operating conditions.

3.4.5.7 Instrumentation

The process variables such as pressure, temperature, and valve positions, are automatically controlled. Deviations from the specified values are detected and indicated via a two level alarm system. An alarm, the operator has the ability to manipulate the process to restore it to normal. A second alarm, automatic action is taken to provide system protection. For safety, system protection and operability, sensors may be installed in duplicate (one out of two action) or triplicate (two out of three action). Action is initiated if any one out of two (or two out of three) sensor reaches alarm levels.

A. Primary Header.

There are two pressure transducers in each of the tails primary headers. Normal pressure is <4 mbar (<1.6 in. H_2O). First alarm (H) is a high to give operator warning of high pressure. Second alarm (HH) signals that the tails take-off system is unavailable, to protect the cascade from high pressure.

B. Tails Pumping Trains.

Each Tails Pumping Train inlet pressure is monitored. Normal pressure is <4 mbar (<1.6 in. H_2O). A alarm (H) gives operator warning of high pressure. A second alarm (HH) trips the vacuum pump off-line to protect the cascade from air ingress. A third alarm prevents the pump from running and the outlet valve from opening to protect against gross leakage into the system.

C. Secondary Header.

The tails secondary pipe header pressure is monitored with three sensors. Normal pressure is <55 mbar (<22.1 in. H_2O). An alarm provides operator warning of high pressure. A second alarm on two of three sensors, the vacuum pump trips off-line and a signal that the tails take-off system is unavailable goes to the programmable logic controller (PLC) in each cascade.

D. Tails Low Temperature Take-off Stations.

For pressure control, each tails cylinder inlet pressure is monitored. Normal pressure is <50 mbar (<20.1 in H_2O). An alarm gives the operator warning of high pressure. A second alarm automatically closes the Tails LTTS inlet valve and trips the Tails LTTS off-line.

For weight control, each Tails LTTS has a weighing system consisting of four load cells and a transmitter to monitor the contents of the UBCs. The first alarm, set at the net allowable weight of UF_6 for the 48-in cylinder, trips the Tails LTTS to standby to prevent overfilling. This promotes the standby auto Tails LTTS to on-line. The second trip, set at the gross allowable weight of a 48-in cylinder filled with UF_6, closes the inlet valve and trips the Tails LTTS to off-line. The output of the weighing system also allows 48Y tails cylinder weight to be verified to be within specified trending limits.

For temperature control and protection from high temperatures, the Tails LTTS has a stand-alone control and protection system. The total system consists of three sensors. For main Tails LTTS temperature control, one sensor is mounted in the air return to the chiller unit and 0monitors the circulating air temperature. This sensor and local control maintains the Tails LTTS temperature. In addition to controlling the station temperature, one output is monitored by the Plant Control System (PCS) and warns when the air temperature rises to a pre-determined temperature. This would indicate a chiller failure or that the defrost heater is not functioning properly. When the defrost heater is on, the circulating air fan is off to minimize the increase in Tails LTTS air temperature.

In addition to the closed loop control system previously described, there are two independent and diverse temperature protection instruments. These provide extra safety margin to protect against increases in temperature that may occur if the heater control does not operate properly. The first instrument is a fail-safe hardwired RTD and the second instrument is a fail-safe thermocouple. Both of these instruments measure the temperature of air inside the LTTS. Both of these instruments will trip the defrost heater and fan power supply in the event the air temperature rises above their set point. If heater trip occurs from these two instruments, the Tails LTTS is automatically taken off-line and put into a standby mode. Both instruments are set to trip at a set point well below the calculated set point required to ensure cylinder integrity.

To prevent desublimation in the cylinder valve, the valve and inlet piping are electrically heated. A temperature sensor on the valve controls the temperature.

E. Tails Evacuation Pump/Chemical Trap Set

To prevent the activated carbon from overheating, there is one instrument that monitors the carbon trap temperature. This sensor will close the Tails LTTS vent valve when carbon trap temperature exceeds a pre-determined temperature. This blocks flow to the vacuum pump/chemical trap set. A flow restriction device is installed as a control feature on the suction of the vacuum to maintain a low flow rate. A flow restriction device is installed as a control feature on the vacuum pump suction to maintain a low flow rate.

3.4.5.8 Criticality Safety

The tails enrichment is less than 0.34%, which is inherently safe from a criticality standpoint. Piping and components used for the tails system are safe-by-design as shown in Table 3.7-8. Criticality safety for an assay dump at 1.5% enrichment to a single tails cylinder in the low-temperature take-off station is described in Section 3.4.8.8.3. The piping arrangement for the tails take-off system at 1.5% enrichment is analyzed in the product piping arrangement analysis.

3.4.6 (See SAR § 12.2.2.5) Product Blending System

3.4.6.1 Functional Description

The primary function of the Product Blending System is to provide a means to fill 30B product cylinders with UF_6 at a specified ^{235}U concentration (Ref. Figure 3.4-12, Process Flow Diagram Product Blending System). This is achieved by either transferring product from one donor cylinder into one receiver cylinder or blending product from multiple donor cylinders into one or more receiver cylinders.

Small intermittent quantities of gaseous effluent are produced from purging and evacuation of flexible piping during connection and removal of both donor and receiver cylinders. The effluent is treated in the Blending and Sampling Vent Subsystem to remove UF_6 and HF, and then discharged to the Pumped Extract GEVS for further treatment. Solid effluents are produced from periodic change-out of chemical and oil traps. There are no liquid effluents directly produced in this system. When the Blending and Sampling Vent Subsystem vacuum pump is taken out of service for maintenance, the oil is reprocessed in the CRDB for reuse.

The Product Blending System is located in the Blending and Liquid Sampling Area of the SBMs. They are operated from the Control Room, with the exception of preparation and maintenance activities that are performed locally at the equipment.

3.4.6.2 Major Components

The major components of the Product Blending System are listed below:

A. Blending Donor Station

A Blending Donor Station consists of an insulated box with a non-flammable insulated core. Each Blending Donor Station includes an electrical air heater and circulation fan to provide the thermal energy to sublime the solid UF_6 in the cylinder.

A weighing system is provided in the Blending Donor Station that consists of a weigh frame with four load cells. This system is used to provide continuous on-line weighing of the donor cylinder to monitor the quantity of UF_6. The Blending Donor Station weighing system is also used to indicate when the cylinder has transferred the required quantity of UF_6 and automatically close the Blending Donor Station outlet valve.

B. Donor Station Valve Hotbox

Valves in a Donor Station Valve Hotbox connect the donor cylinder to its Transfer Header, the Blending and Sampling Vent Subsystem, or the Nitrogen System. Manual and automatic isolation valves and pressure transducers are contained in the electrically heated Donor Station Valve Hotboxes to maintain them at a stable temperature. The UF_6 piping between the Blending Donor Station and Donor Station Valve Hotbox is heat traced.

C. Blending Transfer Headers

To provide operating flexibility there are two transfer headers that are used for transferring UF_6 from Blending Donor Stations to Blending Receiver Stations. Both UF_6 transfer headers are heat traced. In addition a vent header connects all the Blending Donor Stations and Blending Receiver Stations to the Blending and Sampling Vent Subsystem. The transfer headers are arranged such that a number of blending or transfer operations can take place at the same time.

D. Blending Receiver Station

A Blending Receiver Station consists of a composite panel box construction complete with rails for the electric carriage of the cylinder transporter. The Blending Receiver Station panels have a non-flammable insulated core and are vapor sealed to prevent ice build-up within the insulation. Each Blending Receiver Station incorporates an air chiller unit, with controls, to remove thermal energy from the UF_6 gas to cause it to desublime in the cylinder. The chiller unit has a defrost cycle, using a heater, to prevent ice buildup on the coils. Condensate from the chiller is routed to a safe-by-design drip plan to allow the water to evaporate. Electrical heating of the cylinder valve and inlet piping prevents UF_6 from desubliming and blocking the cylinder inlet. A weighing device is provided in the Blending Receiver Station (a frame with four load cells and associated instrumentation) to provide continuous on-line weighing of UF_6 in the receiver cylinder to prevent overfilling.

The front of the Blending Receiver Station is made up of a single door and the back is furnished with an opening to facilitate connection of the cylinder to the UF_6 piping. Seals on the openings in the Blending Receiver Station minimize leaks for energy conservation. The Blending Receiver Station access openings are provided with heat tracing to prevent ice build-up.

E. Receiver Station Valve Hotbox

Valves in the Receiver Station Valve Hotbox connect the Blending Receiver Station to both UF_6 Transfer Headers, the Blending and Sampling Vent Subsystem, or the Nitrogen System. Manual and automatic isolation valves and a pressure transducer are contained in the electrically heated Receiver Station Valve Hotbox to maintain them at a stable temperature. The UF_6 piping between the Receiver Station Valve Hotbox and the Blending Receiver Station is heat traced.

F. Blending and Sampling Vent Subsystem

The Blending and Sampling Vent Subsystem consists of a UF_6 cold trap with its heating and cooling systems and a vacuum pump/chemical trap set. The Blending and Sampling Vent Subsystem serves both the Product Blending System and the Product Sampling System. The Blending and Sampling Vent Subsystem contains the following major components.

1. UF_6 Cold Trap.

The UF_6 cold trap consists of an insulated horizontal tube with internal baffles. It also has a dedicated heater/chiller unit operating at a cooling set point and a heating set point. The heater/chiller unit contains approximately 70 L (19 gal) of silicon oil, as a heat exchange media, which circulates around the cold trap. The low temperature removes the thermal energy from the UF_6 gas, causing it to desublime on the internal walls of the UF_6 cold trap, while leaving the light gas in the gaseous phase. The high temperature results in sublimation of the UF_6 contents of the UF_6 cold trap for transfer back to a receiver cylinder. Each end of the UF_6 cold trap is heat traced to prevent the UF_6 from solidifying and blocking the UF_6 cold trap entrance or exit. The UF_6 cold trap has a weighing device to provide continuous on-line weighing of the UF_6 accumulated.

An automatic control valve located after the UF_6 cold trap restricts the flow of gases through the UF_6 cold trap. This ensures an adequate residence time for the gases in the UF_6 cold trap to allow all of the UF_6 to desublime.

The UF_6 cold trap also provides the capability for emptying sample bottles, using a small manifold located upstream of the UF_6 cold trap. The temperature difference of the sample bottle at ambient and the UF_6 cold trap allows the UF_6 to outgas without heating the bottle.

2. Vacuum Pump/Chemical Trap Set.

The UF_6 cold trap is followed by a vacuum pump/chemical trap set. The set consists of a carbon trap, an aluminum oxide trap, an insulated vacuum pump with nitrogen purge, and an oil trap on either side of the pump. The pump exhausts into the Pumped Extract GEVS.

The activated carbon trap removes any traces of UF_6 not desublimed in the UF_6 cold trap. HF is removed from the gas flow by the aluminum oxide trap. These traps are installed upstream of the vacuum pump. Oil traps are installed before (an aluminum oxide trap) and after (mechanical trap (exhaust filter)) the vacuum pump to prevent diffusion of oil, both back into the Blending and Sampling Vent System and discharge into the Pumped Extract GEVS.

3.4.6.3 Design Description

The design bases and specifications are given in Table 3.4-8, Product Blending System Design Basis. Applicable codes and standards are given in Table 3.4-9, Product Blending System Codes and Standards.

The Product Blending System is sized for the complete 3,000,000 SWU/yr enrichment plant capacity. Gaseous UF_6 is transferred from the Blending Donor Stations to the Blending Receiver Stations through a system of valves and transfer headers.

The entire Product Blending System operates at subatmospheric pressure. In the event of a confinement barrier failure (e.g., pipe leak), releases of UO_2F_2 and HF are greatly minimized because air would migrate into the system rather that UF_6 exiting the system. This important safety feature greatly limits the likelihood of worker and public exposures.

There are two Blending Donor Stations with valve hotboxes, each connected to one of the two transfer headers in the Product Blending System. At any time one or both stations, each connected to a different header, can be on-line to handle the various blending or transfer operations.

There are two Blending Receiver Stations, each with a valve hotbox, connected in parallel to the two transfer headers. Any number of Blending Receiver Stations can be connected to a single header at any one time, but a single Blending Receiver Station cannot be connected to both headers at the same time.

The pressure in each UF_6 transfer header is limited to 500 mbar (7.25 psia). To prevent UF_6 desublimation at ambient building temperatures, the headers are heat traced. Building ambient temperature is maintained above 18°C (64.4°F).

All components and piping in the Product Blending System operate at subatmospheric pressure. Release of UF_6 and/or HF is unlikely because leakage, if it were to occur, would be into the system.

Materials of construction and fabrication specifications for the equipment and piping used in the Product Blending System are compatible with UF_6 at the operating conditions and have been proven by over 30 years of use in existing Urenco European enrichment plants.

3.4.6.4 Interfaces

The Product Blending System interfaces with the following systems and utilities.

A. Pumped Extract GEVS
B. Plant Control System
C. Nitrogen System
D. Compressed Air System
E. Electrical System
F. Hoisting and Transportation Equipment.

3.4.6.5 Design and Safety Features

The Product Blending System is designed and constructed to provide safe operation for plant personnel as well as the general public. Principal design features are as follows:

A. All process piping, valves, vessels and pumps in the Product Blending System operate at subatmospheric pressure.
B. Piping is all welded construction and process valves are bellows sealed.
C. Before disconnecting any equipment, the process piping is evacuated and purged with nitrogen.

D. A local exhaust to the Pumped Extract GEVS is provided via a temporary local extract cross-connection, for initial plant operations, any time a UF_6 line is disconnected.

E. Before discharge to the Pumped Extract GEVS, all gases flow across activated carbon and aluminum oxide in the Blending and Sampling Vent Subsystem chemical traps to remove any traces of UF_6 and HF.

F. Temperature in each Blending Donor Station and Blending Receiver Station is monitored and controlled.

G. Receiver cylinder overfill is prevented by two weight trips. The first is at the desired net weight of UF_6 and the second is at the gross weight of the cylinder with UF_6 contents. Only the first trip is operator adjustable.

H. Hydrocarbon lubricants are not used. The Blending and Sampling Vent Subsystem vacuum pump is lubricated with perfluorinated polyether (PFPE) oil, a fully fluorinated synthetic oil.

I. Removal of a connected cylinder from a Blending Donor Station or a Blending Receiver Station is prevented by an interlock system. Unless the flexible hose on the cylinder valve has been removed and locked in its "holster," a physical barrier prevents the cylinder transporter drawbridge from docking with the station rails, preventing cylinder removal.

J. Temperature in the Blending and Sampling Vent Subsystem carbon trap is monitored and a trip on high temperature causes an alarm.

K. Should a blockage occur in a section of process piping, the heat tracing on that section of pipe is not allowed to be switched on until the solid UF_6 has been removed.

3.4.6.6 Operating Limits

The Product Blending System is capable of handling the enrichment blending requirements of the entire plant. Since customers' enrichment requirements are generally met by adjustments to the enrichment process, blending is not always necessary.

3.4.6.7 Instrumentation

The process variables, such as pressures, temperatures and valve positions are automatically controlled. Deviations from the specified values are detected and indicated by two level alarm systems. At the first alarm, the process operator has the ability to manipulate the process to restore it to normal. At the second alarm, automatic action is taken to provide system protection. For safety, system protection, and operability, some sensors are duplicated. Action is initiated if any one out of two sensors reach alarm levels.

A. Blending Donor Station.

Both the Blending Donor Station air temperature and cylinder temperature are monitored to prevent over pressurization of the donor cylinder due to overheating. An alarm is 62°C (144°F) for the Blending Donor Station air and 54°C (129°F) for the cylinder to give the operator warning of high temperature. A second alarm is for the cylinder, which trips the Blending Donor Station heater off.

In additional to the above temperature controls, the Blending Donor Station has two independent and diverse temperature protection instruments. The first instrument is a fail-safe hardwire RTD and the second instrument is a fail-safe thermocouple. Both instruments measure the Blending Donor Station air temperature. Both instruments automatically de-energize the heater and blower if the Blending Donor Station air temperature rises above their set point.

Both instruments are set to trip at a set point which is well below the calculated set point required to ensure cylinder integrity.

The donor cylinder pressure is monitored with dual sensors to prevent over-pressurization. An alarm gives the operator warning of high pressure. A second alarm automatically closes the cylinder valve and trips the Blending Donor Station off-line. A low pressure alarm warns that a cylinder vent is complete.

Each Blending Donor Station has a weighing system to monitor the mass of UF_6 remaining in the donor cylinder. A weight trip is used to indicate a cylinder is present in the Blending Donor Station. A second weight trip, equal to the net cylinder contents weight after meeting the receiver cylinder requirements, indicates that the target transfer weight has been reached and trips the Blending Donor Station to standby. A third weight trip signals that the donor cylinder is empty and trips the Blending Donor Station to standby.

B. Blending Receiver Station.

The weight of the receiver cylinder is monitored to determine when the required amount of UF_6 has been transferred and to protect against overfilling the cylinder. A low weight trip at indicates that a cylinder is present in the Blending Receiver Station. The Blending Receiver Station trips to standby and automatically closes the inlet valve when the required transfer weight is reached. A second trip, at the maximum net weight for a 30B cylinder, also trips the Blending Receiver Station to standby and closes the inlet valve. A third trip, at the maximum gross weight for a 30B cylinder, closes the inlet valve and trips the Blending Receiver Station off-line. The output of the weighing system also allows cylinder weight to be verified to be within specified trending limits.

The receiver cylinder inlet pressure is monitored to assure that a cylinder is connected to the system. Normal pressure is from 0 to 500 mbar (0 to 7.25 psia). An alarm warns the operator of high pressure. A second alarm automatically closes the Blending Receiver Station inlet valve and trips the Blending Receiver Station off-line.

For temperature control and protection from high temperatures, the Blending Receiver Station has a stand-alone control and protection system. The total system consists of three sensors. For main Blending Receiver Station temperature control, one sensor is mounted in the air return to the chiller unit and monitors the circulating air temperature. This sensor and local control maintains the Blending Receiver Station temperature to a normal value. In addition to controlling the Blending Receiver Station temperature, one output is monitored by the Plant Control System and warns when the air temperature rises. This would indicate a chiller failure or that the defrost heater is not functioning properly. When the defrost heater is on, the circulating air fan is off to minimize the increase in Blending Receiver Station air temperature.

In addition to the closed loop control system previously described, there are two independent and diverse temperature protection instruments. These provide extra safety margin to protect against increases in temperature that may occur if the heater control does not operate properly. The first instrument is a fail-safe hardwired RTD and the second instrument is a fail-safe thermocouple. Both of these instruments measure the Blending Receiver Station air temperature. Both of these instruments will trip the defrost heater and fan power supply in the event the air temperature rises above their set point. If heater trip occurs from these two instruments, the Blending Receiver Station is automatically taken off-line and the transfer sequence stopped.

Both instruments are set to trip at a set point which is well below the calculated set point required to ensure cylinder integrity.

To prevent desublimation in the cylinder valve, the valves and inlet piping are electrically heated. A temperature sensor on the valve controls the temperature.

C. Blending and Sampling Vent Subsystem UF_6 Cold Trap.

During the venting operation, the Blending and Sampling Vent Subsystem UF_6 cold trap outlet pressure is monitored. A high alarm warns of high pressure in the UF_6 cold trap. A second high alarm trips the UF_6 cold trap off-line, switching the heater/chiller unit off and closing the inlet/outlet valves. A low alarm warns of low pressure and indicates the UF_6 cold trap is empty when collected UF_6 is being sublimed for transfer back to a receiver cylinder (i.e., gas back). A second low alarm automatically closes the UF_6 cold trap outlet valve to prevent UF_6 flow to the vacuum pump. A weighing system monitors the UF_6 contents of the UF_6 cold trap. A first alarm warns that the UF_6 cold trap is full. At a system description set weight the UF_6 cold trap trips off-line, the inlet and outlet valves are closed, and a gas-back sequence is required.

The temperature of the UF_6 cold trap is controlledduring cooling to desublime any UF_6 and for heating during sublimation to empty the UF_6 cold trap of collected UF_6 (gas back). A low alarm warns of a chiller unit fault. A high alarm closes the UF_6 cold trap outlet valve and a second high alarm warns of high temperature during gas back. If temperature continues to rise the UF_6 cold trap trips off-line to avoid desublimation of UF_6 in the header.

D. Blending and Sampling Vent Subsystem Vacuum Pump/Chemical Trap Set.

To prevent the carbon trap from overheating and overfilling with UF_6, there is one instrument. The sensor monitors the carbon trap temperature. When the high temperature setpoint is reached, an alarm is activated.

3.4.6.8 Criticality Safety

3.4.6.8.1 Product Cylinders

(Same as Section 3.4.4.8.1 for the Product Take-off System)

3.4.6.8.2 UF_6 Cold Trap

(Same as Section 3.4.4.8.2 for the Product Take-off System)

3.4.6.8.3 Vacuum Pump / Chemical Trap Set

(Same as Section 3.4.4.8.3 for the Product Take-off System)

3.4.7 (See SAR § 12.1.2.6) Product Liquid Sampling System

3.4.7.1 Functional Description

The primary function of the Product Liquid Sampling System is to provide a means to validate the precise mean concentration of uranium-235 (^{235}U) and the purity of uranium hexafluoride (UF_6) in the product by taking homogenized liquid UF_6 samples from each product cylinder (Ref. Figure 3.4-13, Process Flow Diagram Product Liquid Sampling System). All product cylinders are sampled prior to being released for shipment to the customer.

The sampling process is carried out with UF_6 in the liquid state. At ambient temperature, the product in the 30B cylinders is in solid form when the cylinders are placed in the autoclave. Heating the cylinders in the autoclave transposes the UF_6 from the solid phase to the liquid phase. Once in the liquid phase, the cylinder is held at temperature for a sufficient period of time to assure homogenization. After homogenizing, the autoclave is tilted to pour the liquid into the sampling manifold and then into the sample bottles.

In the liquid phase, the pressure in the product cylinders is above atmospheric. The autoclaves provide a secondary confinement barrier and protection in the event a cylinder or sampling manifold should leak.

The system is shown in Figure 3.4-13, Process Flow Diagram Product Liquid Sampling System.

3.4.7.2 Major Components

The Product Liquid Sampling System consists of only one main piece of equipment – the Product Liquid Sampling Autoclave. The Product Liquid Sampling Autoclave is shown in Figure 3.4-14, Liquid Sampling Autoclave Equipment Drawing. The autoclave consists of numerous parts that are all integrated together into one machine (the autoclave). The primary parts of each autoclave are a secondary confinement barrier pressure vessel, tilting mechanism, external cooling water coils and exterior insulation. Also included inside the pressure vessel are a cylinder support frame and rails, electric air heaters and air circulation fan, and a sampling manifold. There is a stand-alone control system and instrumentation.

All components of the autoclave are constructed of materials that have been used in existing Urenco plants for over 30 years. The autoclave pressure vessel is constructed of carbon steel to ASME specifications. The sampling manifold is constructed of Monel. The autoclave is designed to sustain seismic loading without a loss of integrity.

In normal operation, the Product Liquid Sampling System is vented during sample manifold connection and disconnection via a system that is shared with the Product Blending System.

A brief description of each major component of the Product Liquid Sampling System is provided below:

A. Cylindrical Pressure Vessel (Secondary Confinement Barrier).For sampling, the 30B product cylinders (primary confinement barrier) are loaded into the cylindrical pressure vessel (secondary confinement barrier) that is mounted horizontally. In the event of an accidental release of product during the sampling operation, the pressure vessel provides confinement of any UF_6, UO_2F_2, and HF. The pressure vessel is designed and fabricated in accordance with the requirements of ASME Section VIII, Division1, with the exception that the pressure relief devices specified in Sections UG-125 through 137 are not provided due to the potential for release of hazardous material to the environment through a pressure relief device. Instead, two independent and diverse automatic trips of the autoclave heaters and fan motor are provided to eliminate the heat input and preclude approaching the autoclave design pressure. This is considered to be acceptable due to the large margin between the autoclave design pressure 12 bar (174 psia) and the maximum allowable working pressure 1.8 bar (26 psia) and the fail-safe design of the two independent and diverse automatic trips of the autoclave heaters and fan motor. The pressure vessel is also tested and stamped to the requirements of ASME Section VIII, Division 1 rules and is registered with the National Board. The pressure vessel design pressure is 12 bar (174 psia) absolute and the design temperature is 160°C (320°F). One end of the pressure vessel has a welded on (stationary) dished head. On the other end is a swing out door assembly that consists of a dished head, sealing ring, gaskets, and a locking device to lock the head assembly in place after the door is closed. There are dual gaskets to provide high sealing integrity.

B. Cylinder Support Frame and Rails.

A support frame is inside the pressure vessel. The frame is designed to contain the 30B cylinder. The support frame has rails that match the rail transporter rail design. When the cylinder is inserted in the autoclave, the frame and rails prevent the cylinder from moving when the pressure vessel is tilted. The support frame also prevents the cylinder from moving out of position during any abnormal event (such as seismic).

C. Electric Heaters and Fan.

Three electric heaters heat the inside of the autoclave. In addition to the three heaters, there is one variable speed fan that provides forced circulation of hot air over the exterior of the cylinder.

D. Sampling Manifold.

A sampling manifold is connected to the cylinder isolation valve and attached to the cylinder skirt to provide mechanical support, after the cylinder is in place. The sampling manifold is a single pipe, fabricated to provide three drain points for connection of three type 1S sample bottles to the cylinder. The total volume of the sampling manifold is such that the volume of UF_6 held in the manifold, when filled, will provide a sample of the required volume into each of the three sample bottles.

E. Cooling Coils.

The autoclave is cooled with coils mounted on the exterior of the pressure vessel. Cooling media is supplied from Air Cooled Chillers.

F. Insulation.

The external surfaces of the pressure vessel are insulated for energy conservation. The insulation is non-flammable.

G. Tilting Mechanism.

The tilting mechanism raises and lowers the end of the pressure vessel with the fixed head (opposite the door end), while the other end rotates around hinge pins located under the pressure vessel. The tilting mechanism provides three positions:

- When the sample manifold is being filled, the tilting mechanism sets the incline to 30° from horizontal. At this incline, liquid UF_6 pours from the cylinder into the sampling manifold.
- For cylinder loading and unloading, the tilting mechanism sets the centerline of the pressure vessel parallel to the floor (0°).
- When the cylinder is in warm-up, homogenization, and cooling, or the manifold is being cleared, the tilt mechanism sets the autoclave at –2° from horizontal.

H. Stand Alone Control System.

The autoclave has a stand-alone control system. This system and its associated instrumentation are described in Section 3.4.7.7, Instrumentation.

I. Blending and Sampling Vent Subsystem.

Venting of the Product Liquid Sampling System is performed using the same equipment as is used for the venting of the Product Blending System. The Blending and Sampling Vent Subsystem equipment consists of a UF_6 cold trap with heater and chiller unit, and a vacuum pump/chemical trap set that includes carbon and aluminum oxide traps and a vacuum pump.

3.4.7.3 Design Description

The design bases and specifications are given in Table 3.4-10, Product Liquid Sampling System Design Basis. Applicable codes and standards are given in Table 3.4-11, Product Liquid Sampling System Codes and Standards.

There are three Liquid Product Sampling Autoclaves at the NEF with one allocated to process flexibility, maintenance, etc.

The Product Liquid Sampling System consists of autoclaves that liquefy and homogenize the UF_6 contained in international 30B cylinders. This process is accomplished by passing hot air over the cylinders at a controlled rate.

For normal operation, a filled 30B product cylinder is loaded into an autoclave by rail from the cylinder transporter, and secured by clamps to prevent movement when the autoclave is tilted.

The sampling manifold is connected to the cylinder valve and secured to the cylinder skirt. The manifold is then connected to the Blending and Sampling Vent Subsystem. It is purged with nitrogen and pressure tested, and then evacuated and vacuum tested. With the manifold evacuated, the vent system is disconnected and the cylinder valve is opened by hand. The cylinder valve is verified as open and not blocked, and the cylinder starting pressure is verified as suitable to continue. Then the manual actuator used to close the cylinder valve is connected to allow the valve to be closed from the outside of the autoclave. The manual actuators for the sample bottle valves are also connected.

The autoclave door is then closed and locked.

The autoclave is pressurized at ambient temperature to approximately 1,200 mbar (17.4 psia) absolute pressure with nitrogen. This assures a slight pressure (above atmospheric) still exists at the end of the sampling cycle, following cooling. The positive pressure allows the autoclave to vent and ensures some gas flow to the HF monitor located in the line to the Pumped Extract GEVS.

The autoclave is then tilted to the –2° position to reduce the potential for splash over of UF_6 into the manifold during heat-up. The electric heaters and fan are then actuated and the internal temperature in the autoclave is brought up to operating temperature.

Hot air forced over the cylinder raises the UF_6 temperature to change the solid UF_6 to liquid. When the measured UF_6 pressure reaches its control set point and the cylinder contents are in equilibrium, the temperature set point remains steady.

When the pressure set point of 2.5 bar (36.3 psia) is reached, the autoclave maintains the pressure and temperature so the UF_6 can homogenize. This homogenizing period lasts for approximately 16 hours.

After homogenization, the sampling procedure begins. With the sample bottles closed, the heater controller is changed over to temperature control and the set point for the air temperature is elevated slightly. Due to the much smaller mass of the sample manifold compared to the cylinder, the sample manifold will heat up quicker than the cylinder. Any liquid UF_6 within the sample manifold piping vaporizes and flows back into the cylinder and condenses.

The air heaters and fan are then switched off.

After the heaters and fan are off, the autoclave is tilted to 30°. The liquid UF_6 flows from the product cylinder into the sampling manifold (which has three 1S sample bottles connected to it). To avoid overfilling of the bottles, the volume of the pipe on each branch from the manifold to the bottle is less than the volume of the sample bottle.

After pouring liquid UF_6 into the sampling manifold, the autoclave is returned to the –2° position and the valves on the sample bottles are opened to fill the bottles with liquid UF_6. The valves of the sample bottles are then closed.

The air heaters and fan are switched on and the temperature set point is increased slightly. The remaining liquid UF_6 within the sampling manifold is vaporized and re-condenses in the cylinder. This removes any residual liquid UF_6 from the manifold.

Following the sampling operation and removal of the residual liquid UF_6 from the manifold, the cylinder valve is closed. The autoclave and the cylinder are cooled down by circulating cooling water through the cooling coils until the pressure in the cylinder is subatmospheric and the liquid UF_6 goes back to the solid state.

The autoclave is then returned to the horizontal position. Once the autoclave is validated to be free of any UF_6 and HF, the door is opened.

The sample manifold is purged with nitrogen and vented to the Blending and Sampling Vent Subsystem UF_6 cold trap and vacuum pump/chemical trap set.

The three sample bottles are removed and taken to the laboratory. One bottle is analyzed, one is sent to the customer, and one is held as a reference sample.

The cylinder is then removed from the autoclave by the cylinder transporter.

3.4.7.4 Interfaces

The Product Liquid Sampling System interfaces with the following systems and utilities.

A. Blending and Sampling Vent Subsystem
B. Pumped Extract GEVS
C. Nitrogen System
D. Compressed Air System
E. Electrical System
F. Hoisting and Transportation Equipment
G. Plant Control System.

3.4.7.5 Design and Safety Features

The Product Liquid Sampling System is designed and constructed to provide safe operation for plant personnel as well as the general public. Releases to the atmosphere are minimized by:

A. Cylinder fill mass is limited to ensure cylinder integrity by verifying the weight of product cylinder is within limits before placement and heating in the autoclave.
B. Any heating, handling, or sampling of UF_6 in its liquid state is done in a sealed autoclave to provide secondary confinement in the event of leakage of the primary confinement barrier. The autoclave is not opened until the UF_6 is cooled to a solid and the cylinder is returned to less than atmospheric pressure.
C. Temperature in each autoclave, and of the cylinder being sampled, is monitored and controlled.
D. Abnormal temperature in each autoclave is detected via temperature sensors and indicated by alarms. Appropriate actions to shut down the systems are taken as necessary.
E. Abnormal pressure in each autoclave, and in the cylinder being sampled, is detected via pressure sensors and indicated by alarms. Appropriate actions to isolate the process or shut down the systems are taken automatically.

F. Before opening the autoclave or disconnecting the sampling manifold, the equipment and process piping is evacuated and purged with nitrogen.

G. A local exhaust to the Pumped Extract GEVS is provided for initial plant operations via a temporary local extract cross-connection any time the autoclave is opened or the sample manifold is disconnected.

H. Before discharge to the Pumped Extract GEVS, the vent gases flow through the UF_6 cold trap and then across activated carbon and aluminum oxide in the Blending and Sampling Vent Subsystem to remove any traces of UF_6 and HF.

I. Temperature and weight in the Blending and Sampling Vent Subsystem carbon trap is monitored and a trip on weight and a trip on temperature stops the Blending and Sampling Vent vacuum pump.

J. The autoclave is designed and tested to ensure leak tight integrity is maintained.

K. The autoclave door seal is leak tested and inspected prior to each autoclave sample sequence.

3.4.7.6 Operating Limits

The Product Liquid Sampling System is capable of handling the sampling requirements of the entire plant. The system is designed to allow flexibility by providing for the sampling of up to an equivalent of nine product cylinders per week. This number provides a margin based on the 3,000,000 SWU per year rated capacity of the NEF.

3.4.7.7 Instrumentation

Each autoclave is controlled by a stand-alone control system. This system carries out all the control and protection functions as well as providing interface with the Plant Control System. There is a local operator interface (LOI) at each autoclave. From the LOI an operator can control all functions of the autoclave, as well as start and stop the autoclave process. All process variables are displayed at the LOI and are relayed to, and displayed in, the Control Room.

The process variables, such as pressures, temperatures, and interlock positions, are automatically controlled. Deviations from specified values are detected and indicated via two level alarm systems. At the first alarm level, the process operator has the ability to manipulate the process to restore it to normal. At the second alarm level, automatic action is taken to provide system protection. For safety, system protection, and operability, some critical sensors are duplicated. Action is initiated if any one out of the two sensors reach alarm levels.

A. Product Liquid Sampling Autoclave.

Two pressure sensors, connected to the cylinder by the sampling manifold, monitor and control the cylinder pressure during heating, homogenization, and sampling. Normal pressure during homogenization and liquid sampling is less than 3.0 bar (43.5 psia). The first alarm level is 3.0 bar (43.5 psia) to give operator warning of over pressurization. The second alarm level is 3.2 bar (46.4 psia), which automatically de-energizes the air heater and fan. A second cylinder pressure monitor with the same alarm levels provides backup protection.

Pressure inside the autoclave is monitored with a single sensor. A first high switch, at 1.1 bar (16 psia), prevents the door from being opened while the autoclave is under pressure. A second high switch at 1.2 bar (17.4 psia), which is the normal operating pressure of the autoclave at the start of heating, closes the nitrogen supply valve. The third high alarm level, at 1.5 bar (21.8 psia), gives the operator warning of over pressurization. The final high alarm level is 1.8 bar (26.1 psia) and automatically de-energizes the autoclave heaters and aborts the cycle – manual resetting of the sample cycle is required.

A temperature sensor monitors the surface of the cylinder during heating and cooling. A temperature above 55°C (131°F) prevents the autoclave door from being opened. This ensures that the UF_6 is solid before the cylinder can be removed from the autoclave.

Dual temperature sensors monitor the autoclave air temperature for control and protection. One sensor modulates power to the heaters to control the autoclave air temperature. The other sensor provides no control, but monitors and protects the autoclave air temperature only. Both sensors provide protection by a one from two voting system. Normal temperature during heating is less than 110°C (230°F). A first switch at 40°C (104°F) prohibits unlocking the autoclave door until the autoclave has cooled at the end of the sampling cycle. An alarm at 110°C (230°F) warns the operator of high temperature. The third alarm level at 115°C (239°F) automatically de energizes the autoclave heater and fan.

Each of the three autoclave heater elements has a temperature switch at 150°C (302°F) to protect the element. The air circulating fan motor is protected using a temperature sensor with a high warning alarm and a switch to de-energize the heaters and fan.

An HF monitor in the common vent header from the autoclaves to the Pumped Extract GEVS provides a backup check to verify the quality of the air venting from the autoclave. If HF is detected here the shotbolts lock and prevent the autoclave doors from opening and an alarm signals to manually close the open autoclave vent valve, and the other autoclave vent valves cannot be opened.

In addition to the process control noted above, there are six timers associated with the various steps of the sampling cycle.

Two timers provide for monitoring the autoclave to maintain safe start-up of the heating cycle. The value of these two timers is made to enable monitoring of the autoclave pressure rise during the start of the heating cycle verses time. The autoclave pressure is compared to an algorithm during the first phase of the heating stage when the heating is carried out with a preset air temperature. If the pressure rise conforms to the algorithm, the heating is permitted to advance to a second phase where the heating is controlled by the cylinder pressure. In the event the algorithm is not being met, the heating cycle is aborted.

Two other timers operate to monitor the quality of the air space in the autoclave and support the operation of the internal HF monitor. After the system stabilizes, the autoclave air pressure and temperature are compared. A departure from the anticipated pressure to temperature ratio indicates a leak has occurred. A lower than anticipated pressure to temperature ratio indicates a pressure leak from the secondary containment (autoclave). A higher than anticipated ratio indicates a leakage of UF_6 into the secondary containment. If the pressure/temperature ratio is outside the anticipated range, the cycle is aborted.

Another timer is used to confirm that the cooling cycle is continued for a sufficient time to ensure the cylinder contents are solidified before the cylinder is removed from the autoclave.

A final timer ensures that the autoclave is fully vented before the autoclave door is opened.

B. Blending and Sampling Vent Subsystem.

The instrumentation for the Blending and Sampling Vent Subsystem equipment is discussed in Section 3.4.6, Product Blending System.

3.4.7.8 Criticality Safety

Table 3.7-10 provides the safe-by-design components used for the Product Liquid Sampling System. Criticality safety for these items is bounded by similar or identical items provided for the Product Take-off System. No additional calculations are necessary.

3.4.8 (See SAR § 12.2.2.7) Contingency Dump System

3.4.8.1 Functional Description

The Contingency Dump System (Ref. Figure 3.4-15, Process Flow Diagram Contingency Dump System) provides an exhaust route for UF_6 from the cascade in the event of the cascade operating outside of its design envelope. The Contingency Dump System also provides an evacuation route for UF_6 and light gases to allow the centrifuges to be safely run down to rest.

Dumping of the UF_6 from the cascade, should the need arise, will take place by first choice to the Tails Take-off System. If the Tails Take-off System becomes unavailable, the NaF traps are used. The Contingency Dump System is designed to operate in one of two principal operating modes, passive evacuation or active evacuation. The function of the passive evacuation mode is to trap the UF_6 evacuated from the cascade in the sodium fluoride (NaF) traps. This "passive evacuation" is so called because evacuation of the cascade can initially take place without actively pumping; the low pressure maintained in the NaF traps and buffer volume in standby mode facilitates this process. Operation in the passive evacuation mode results in a progressive increase in the operating pressure at the NaF traps due to the accumulation of light gas in the buffer volume. This light gas is removed from the buffer volume by operation in the active evacuation mode. In "active evacuation" the buffer volume is opened to the vacuum pump/chemical trap set and the light gas is exhausted from the passive system via the carbon and aluminum oxide traps to the Pumped Extract GEVS.

3.4.8.2 Major Components

The major Contingency Dump System components are listed below.

A. Contingency Dump System NaF Traps and Buffer Volume.

A pressure transducer is located on the cascade header to monitor conditions at the cascade header during dump. This transducer is dedicated to the Dump Control System and provides an indication of cascade conditions during dump.

The Contingency Dump System uses three chemical traps (Ref. Figure 3.4-16, NaF Trap Equipment Drawing) filled with sodium fluoride (NaF). This material is able to adsorb UF_6 and HF without producing gaseous reaction products. The buffer volume provided after the NaF traps accommodates any light gas that passes through the NaF traps. The NaF traps and buffer volume constitute the "passive" part of the Contingency Dump System. This passive part of the Contingency Dump System is able to maintain a dump capacity in the event of a loss of other services or utilities.

Automatic valves are provided for plant operation. Pressure transducers are positioned in the Contingency Dump System to monitor both the buffer volume pressure and dump pump suction pressure. This monitoring is for both the operation and protection of the Contingency Dump System and the prevention of backflow of light gases through the NaF traps to the Cascade System.

A fourth pressure transducer is mounted at the cascade valve frame between the automatic and manual valve to enable monitoring of the seating efficiency of these two valves. A tight shut-off of the valve must be maintained throughout the life of the Contingency Dump System to prevent the NaF traps becoming loaded with UF_6. A tight shut-off valve is required to enable maintenance of the Contingency Dump System.

B. Contingency Dump System Vacuum Pump/Chemical Trap Set.

The Contingency Dump System Vacuum Pump/Chemical Trap Set major components are:

- A roots type and rotary vane vacuum pump
- A mixed-bed activated carbon and aluminum oxide trap

The NaF traps and buffer volume of the passive dump system are backed by the Contingency Dump System Vacuum Pump/Chemical Trap Set which comprises, in order, a Roots type vacuum pump, mixed-bed (activated carbon and aluminum oxide (Al_2O_3)) trap and sliding vane type vacuum pump with an aluminum oxide oil trap on the pump suction and a mechanical oil trap (exhaust filter) on the pump discharge. The sliding vane vacuum pump discharges into the Pumped Extract GEVS. Connection of the Contingency Dump System vacuum pump/chemical trap set is made to the NaF traps/buffer volume of the Contingency Dump System by flexible stainless steel vacuum bellows and to the Pumped Extract GEVS by a pressure hose. The equipment is assembled as a modular package to facilitate easy replacement and maintenance of the unit as a whole in the event of a failure.

The function of the activated carbon in the mixed bed trap is to remove small traces of UF_6 and the aluminum oxide is to remove any HF from the gas flow. The oil traps prevent oil migration both upstream and into the Pumped Extract GEVS.

To maintain a high availability of the Contingency Dump System, power supply to the Contingency Dump System pumps is maintained by standby diesel generators in the event of a failure of the normal power supply. Each cascade has one Contingency Dump System that directs a cascade dump either to the Tails LTTS or the NaF traps.

3.4.8.3 Design Description

The design bases and specifications are given in Table 3.4-12, Contingency Dump System Design Basis. Applicable codes and standards are given in Table 3.4-13, Contingency Dump System Codes and Standards.

An independent Contingency Dump System is provided for each cascade. All components of the Contingency Dump System operate a subatmospheric pressure. Release of UF_6 or light gases is minimized because leakage, if it were to occur, would be inward to the system.

All of the process equipment in the Contingency Dump System is designed, constructed, and operated using good engineering practice and in accordance with the LES Quality Assurance program.

The materials of construction, corrosion allowances and fabrication specifications for the equipment and piping used in the Contingency Dump System are compatible with UF_6 and HF at the operating conditions and have been proven by extensive use in existing enrichment plants.

3.4.8.4 Interfaces

The Contingency Dump System interfaces with the following systems and utilities:

A. Cascade System
B. Pumped Extract GEVS
C. Nitrogen System
D. Compressed Air System
E. Electrical System
F. Plant Control System.
G. Tails Take-off System

3.4.8.5 Design and Safety Features

This system is designed and constructed to provide safe operation for plant personnel as well as the general public. Principal design features are as follows:

A. All piping, vessels and pumps in the Contingency Dump System operate at subatmospheric UF_6 pressure.
B. Piping is all welded construction and process valves are bellow sealed.
C. Before carrying out any disconnections or connections of equipment, the piping is evacuated and nitrogen purged. Flexible exhaust hoses connected to the Pumped Extract GEVS via a temporary local extract cross-connection, during initial plant operations, remove any releases from the work area.
D. Before discharge to the Pumped Extract GEVS, all gases flow across activated carbon and aluminum oxide to remove any traces of UF_6 and HF via the Contingency Dump System Vacuum Pump/Chemical Trap Set.
E. Monitoring of fill level of NaF trap when charging the NaF trap.

F. Hydrocarbon lubricants are not used. The rotary vane vacuum pumps are lubricated with perfluorinated polyether (PFPE) oil, a fully fluorinated synthetic oil.

G. The potential for capture of UF_6 and HF in the NaF traps is maximized by operation of the Contingency Dump System in a passive mode. In passive evacuation mode the flow of UF_6 from the cascade is restricted to the NaF traps and buffer volume by valving.

H. The main electrical supply is supported by a Standby Diesel Generator System for electrical services essential to equipment protection. In the case of a power failure the UF_6 valves will retain their position because their control is via a 24 VDC uninterruptible power supply (UPS). On loss of the UPS the valves will revert to a fail-safe position.

I. Compressed air has a high reliability in normal operation with sufficient capacity at the pressure reservoir for a safe shut down. To protect against a compressed air failure, all air driven valves are fitted with check valves to ensure that the valve retains a position of at least 50% for six hours.

J. The potential for a criticality arising in the systems and components associated with a cascade dump (e.g., Tails LTTS, 48Y cylinder, NaF traps buffer volume, piping, etc.) is prevented byenrichment control, which limits the upper bound for the average enrichment of the assay (1.5%). The systems and components associated with a cascade dump are bounded by this average cascade enrichment and the criticality safety approvals for the items are granted based on 1.5% ^{235}U.

3.4.8.6 Operating Limits

The Contingency Dump System must be able to remove the UF_6 content of the cascade and evacuate to a minimum pressure during abnormal operating conditions.

3.4.8.7 Instrumentation

The cascade protection system is provided by two Programmable Logic Controllers (PLCs), one PLC controlling and protecting the process while the other PLC monitors parameters essential to the separation process and takes action if these parameters are out of specification. In the event of a failure of either of the PLCs, the failure will invoke a cascade dump.

The Contingency Dump System process variables such as pressures and valve positions are displayed in the Control Room and are automatically controlled by the Contingency Dump System Local Control Center (LCC). Deviations from the specified values are detected and indicated via two-tiers of signals. At the first level the signal provides an alarm only and the process operator has the ability to manipulate the process to restore it to normal operation. At the second alarm/trip level, automatic action is taken to provide system protection.

The pressure transducers and valve and pump status signals of the Contingency Dump System are directly connected to the control PLC in the Contingency Dump System LCC.

The dump system has two distinct modes of operation, in the normal state the Contingency Dump System is in standby mode. In the event of a “dump” signal the “dump” mode control and action set-points will override the trips and alarms of the standby mode where these set-points are different.

The system is placed in Dump Mode either automatically by a dump demand signal from the cascade control and protection system or can be manually selected either by a push button in the Control Room (Cascade Hall Dump) or from the Plant Control System (Cascade Dump).

A. Contingency Dump System NaF Traps and Buffer Volume.

The NaF traps and buffer volume comprise the passive part of the Contingency Dump System.

The Contingency Dump System pressure is monitored at two positions at the traps and buffer volume. The first position is at the buffer volume upstream of the automatic shut off valve. The second position is downstream of the shut-off valve and monitors the vacuum pump suction line pressure.

The passive dump system operating pressure at the NaF traps and buffer volume is maintained within the range high (H1) to low (L) while the system is in the Standby mode.

Pressure control maintains the pressure at the NaF traps and buffer volume by opening the downstream valve on rising pressure (H1) and closing the valve on falling pressure (L).

A high alarm (H2) at the NaF traps indicates an alarm in the event of the buffer volume pressure rising above its normal operating range in standby mode. A high-high alarm (HH) inhibits the use of the Contingency Dump System by removing the "dump system available" signal to the cascade protection system.

Pressure indication downstream of the automatic valve provides a safety and monitoring function. In the event of a high-high pressure an alarm/trip (HH2) inhibits the use of the active evacuation sequence and will close the valve. The HH2 alarm/trip is active during all standby and dump operating modes of the Contingency Dump System. In "dump" mode the HH2 alarm/trip is overridden in "light gas evacuation" mode only by alarm/trip HH1. Operation of the HH1 alarm/trip will close the valves downstream of the buffer vessel and the active evacuation valve. The low set point of the HH1 trip provides a more rapid response to a fault condition and air ingress at the lower operating pressures of the Contingency Dump System when in light gas evacuation mode.

On dump instruction the Contingency Dump System status is promoted from "Standby" to "Passive Evacuation" and UF_6 and light gas enters the Contingency Dump System from the cascade under the control of the Contingency Dump System. The buffer volume pressure indicator/controller high trip, (H3), is made active overriding the lower trip points to permit light gas passing the NaF traps to fill the buffer volume.

The time T1 is started on dump demand. Time T1 retains the Contingency Dump System in "passive evacuation" for the set period.

B. Contingency Dump System Vacuum Pump/Chemical Trap Set.

On timeout of the timer T1 or a low pressure trip at the cascade header pressure the dump sequence is promoted to "Active Evacuation," the valve down stream of the buffer volume is opened and time T2 is started. During "Active Evacuation" the Contingency Dump System pump module is used to evacuate the accumulating light gases from the buffer volume via the downstream valve. On timeout of timer T2 the Contingency Dump System enters "Light Gas Evacuation" and the cascade is evacuated through the NaF trap bypass line.

A temperature alarm is fitted to the mixed bed trap to provide indication of an excessive carry over of UF_6 gas from the NaF traps and buffer volume when in "Active Evacuation" or directly from the cascade when operating in "Light Gas Evacuation." The temperature alarm provides an alarm function only on excessive UF_6 gas flow at the trap.

The Contingency Dump System interfaces with the Cascade System to provide the Control Room operator with cascade data in the event of a failure in the cascade control PLC.

The following cascade status conditions are monitored by the Contingency Dump System PLC:

A. The position of the cascade dump valve (open/closed)
B. Recipient temperature
C. Cascade header pressure.

The Contingency Dump System monitors the pressure of the cascade header by a single pressure transducer. This pressure transducer is used in conjunction with pressure control at the Contingency Dump System buffer volume to determine the availability of the Contingency Dump System. Contingency Dump System availability is maximized over the whole of the cascade run-down by a two stage monitoring of the cascade header pressure.

Due to the anticipated infrequent use of the Contingency Dump System, its availability is maintained by a regular testing program of both monitoring equipment and valves to ensure that a failure of the Contingency Dump System PLC is revealed.

3.4.8.8 Criticality Safety

3.4.8.8.1 Contigency Dump System NaF Traps

The average enrichment of the UF_6 being dumped from a cascade depends on the product and tails enrichments. Within the ranges of product enrichment up to 5.0 $^{w}/_{o}$ ^{235}U and tails depletion to 0.34 $^{w}/_{o}$ ^{235}U, the average enrichment of the UF_6 being dumped is always less than 1.5 $^{w}/_{o}$ ^{235}U. Based on this, the contingency dump traps are analyzed at an enrichment of 1.5 $^{w}/_{o}$ rather than 6.0 $^{w}/_{o}$. The contingency dump traps are sodium fluoride traps with an outer diameter of approximately 54 cm (21.3 in). Each cascade has an independent contingency dump system that can either discharge to a designated Tails LTTS or to the three NaF Traps for that cascade.

MONK8A (SA, 2001) calculations were carried out first for the three NaF traps at their normal positions with 2.5 cm (0.984 in) of water reflection around the trap body. The calculations considered the cases with and without the associated piping to demonstrate the inconsequential effect of the piping on k_{eff}. The model assumed that adsorbed UF_6 within the trap is wet uranyl fluoride at optimum moderation. The uranium enrichment was 1.5 $^{w}/_{o}$ ^{235}U. The value of k_{eff} obtained was substantially below 0.95. The model represents a UF_6 loading in the entire volume of trap with no credit for the presence of the trap material (NaF). This loading would require many dumps to achieve. Contingency dump traps are thus intrinsically safe by a very large margin.

Considering interaction and movement between the three closely spaced traps, criticality safety is demonstrated with the MONK8A (SA, 2001) calculations. The calculation modeled three touching NaF traps in a close triangular arrangement as the most reactive configuration. For interaction, a 7 L vacuum cleaner approved for cleaning operations was placed in contact with the traps. The vacuum cleaner was filled with wet uranyl fluoride at 6% enrichment and optimum moderation with 2.5 cm of water reflection rather than 1.5% used for the contingency dump system. The resulting K_{eff} is less than the limit of 0.95, demonstrating that the configuration would remain safe as a result of movement due to a seismic or tornado missile event.

The UF_6 containing components for the contingency dump system are located on the second floor of the SBM, and therefore, not impacted by flooding. The safe condition described above for the contingency dump system remains valid under flooded conditions.

3.4.8.8.2 Contingency Dump Vacuum Pump and Chemical Trap Set

The Contingency Dump Vacuum Pump and Trap Set is a system that has similarities to the pump and trap sets in the UF_6 Handling Area (tails evacuation, product, feed, etc). The set is part of the active evacuation of the contingency dump system. The components of the pump/trap set consists of manual isolation valves, a roots vacuum pump (Leybold WSU251), mixed bed chemical trap, a rotary vane vacuum pump (Oerlikon Leybold TRIVAC D40BCS), an Al_2O_3 oil adsorption filter and an exhaust filter with oil return. The items on the Pump and Trap Set are safe-by-design individually. The Pump and Trap Set as a whole is safe-by-design by physical arrangement as demonstrated in a nuclear criticality safety evaluation through comparison to a bounding calculation performed for the product vent vacuum pump/chemical trap set described in Section 3.4.4.8.3.

3.4.8.8.3 Assay Dump to a Tails Cylinder

Upon activation of the contingency dump, the preferred evacuation route is to the tails cylinders. The contingency dump removes all UF_6 from the cascade halls thus mixing the feed, tails, and product material to have an upper-limit average enrichment of 1.5%.

The components involved in the removal of UF_6 are the associated piping, low temperature take-off stations (LTTS), and 48Y cylinders.

The model conservatively assumed that only one LTTS was available and all material was evacuated into that tails cylinder. Additionally, the material was conservatively assumed to be greater than the quantity within the cascades and associated piping. The MONK8A (SA, 2001) model provides a bounding analysis consisting of a generic geometry to create conservative conditions. This material from the cascades was assumed to be optimally moderated at an H/U ratio of 7 as a sphere. This sphere was further encased by unmoderated UF_6 at a maximum theoretical density to increase the reflection of the system. To account for spurious reflection, a 2.5 cm of water wrapped the outer sphere. The system did not consider neutron interaction due to the location and isolation of the cylinders within the LTTS. The MONK8A (SA, 2001) result was well within the sub-critical limit of 0.95, based on an average enrichment of 1.5% as for the Contingency Dump System.

3.4.9 (See SAR § 12.2.2.8) Gaseous Effluent Vent Systems (GEVS)

Note: The Heating Ventilation and Air Conditioning (HVAC) systems and GEVS for the NEF are undergoing redesign. After these design changes are finalized the information in Section 3.5.1 (Building Ventilation),, Section 3.4.9 (Gaseous Effluent Vent Systems), and other sections that reference GEVS will be revised as necessary and in accordance with 10 CFR 70.72. The final design will be evaluated in accordance with the requirements of 10 CFR 70.72 prior to requirements for operational readiness.

The function of the GEVS is to remove particulates containing uranium, and HF from potentially contaminated process gas streams. Prefilters and HEPA filters remove particulates and impregnated activated carbon filters are used for the removal of any HF. The systems produce solid wastes from the periodic replacement of prefilters, absolute filters, and chemical filters. The systems produce no gaseous effluents of their own, but discharge effluents from other systems after treatment to remove hazardous materials.

There are two GEVSs for the plant. The Pumped Extract GEVS and the CRDB GEVS. Applicable codes and standards are given in Table 3.4-14, Gaseous Effluent Vent System Codes and Standards.

3.4.9.1 Pumped Extract GEVS

The Pumped Extract GEVS, a Safe-By-Design system, provides exhaust of potentially hazardous contaminants from the SBMs from all permanently connected vacuum pump and trap sets, as well as temporary connections used by maintenance and sampling rigs.

The Pumped Extract GEVS serving the SBMs is located in theUF_6 Handling Area of SBM-1001. The system is monitored from the Control Room.

3.4.9.1.1 Functional Description

The Pumped Extract GEVS interfaces with the following systems, auxiliary activities, and utilities:

A. UF_6 Feed System
B. Product Take-off System
C. Tails Take-off System
D. Product Blending System
E. Product Liquid Sampling System
F. Contingency Dump System
G. Assay Sampling System
H. Electrical System
I. Plant Control System
J. Cascade Mobile Evacuation System
K. Cascade Mobile Sampling System
L. On-Line Mass Spectrometer System (No HF and UF_6 hazard exist. To support the connection of on-line mass spectrometer standards, a mobile pump and trap set may be used. One time use.)

M. Short Break Load System (Standby Diesel Generators)
N. No Break System (UPS)
O. Alpha Monitors
P. HF Monitors
Q. Liquid Sampling Autoclaves

The design requirements provide a large safety margin between normal and accident conditions so that no single failure could result in the release of significant hazardous material. The amounts of UF_6 in the system also preclude the release of significant quantities of hazardous material from a single failure or multiple failures. Instrumentation is provided to detect abnormal process conditions so that the process can be returned to normal automatically or by operator actions.

3.4.9.1.2 Major Components

The Pumped Extract GEVS consists of the following major components.

A. Duct system
B. Prefilters
C. HEPA Filters
D. Impregnated activated carbon filters
E. Centrifugal fans
F. Monitoring and controls (HF) before and after filter trains (with temperature indicating alarms on carbon filters)
G. Automatically controlled inlet and outlet isolation dampers
H. Exhaust stack
I. Monitoring and controls (alpha and HF) in exhaust stack
J. Airflow monitors and airflow blender

3.4.9.1.3 Design Description

The design bases and specifications are given in Table 3.4-15, Pumped ExtractGEVS Design Bases.

The Pumped Extract GEVS, which is a Safe-By-Design system, serves the SBM. It consists of a pipe network that serves all of the permanently connected vacuum pump and trap sets as well as temporary connections used by maintenance and sampling rigs in the SBMs. The flexible exhaust hoses, connected to the Pumped Extract GEVS via a temporary local extract cross-connection, are used for cylinder connection/disconnection or maintenance procedures. A minimum target velocity of 7 m/s (1380 ft/min) will be established in the piping system to convey particulate contaminants through the piping and minimize settling. Each section of the pipe system has an orifice plate to maintain a minimum air velocity. The flexible exhaust hoses will have a capture velocity of 0.75 m/s (148 ft/min).

The Pumped Extract GEVS piping connects to an inlet header. Off the inlet header are two parallel trains each with eight banks of filters. Each train is capable of handling 100% of the effluent during normal operations. One train is online and the other is a standby. Each bank of filters consists of a60-65% efficient prefilter with removes dust and protects the HEPA filter, a 99.97% efficient HEPA filter which removes uranium aerosols (mainly UO_2F_2 particles), a 99% efficient activated carbon filter for removal of HF, a position for an optional additional filter, and a final 99.97% HEPA filter which removes carbon fines and any additional uranium aerosols. Manual dampers are also located at the inlet and outlet of each of the eight banks of filters for testing and to allow isolation of a bank while the unit continues to operate. Flow balancing orifices are provided on each bank to assure balances flows across each bank.

Each filter train vents the clean gases through a variable speed centrifugal fan, which maintains the negative pressure upstream of the filter train by using input from a differential pressure controller. Finally, the clean gases are discharged through a roof top exhaust stack on the SBM. One exhaust stack is common to the operational system and the standby system. A switch between the operational and standby systems (trains) can be made using automatically controlled dampers. There are motorized and manually controlled dampers located at the inlet and outlet of each train to allow for different modes of operation of the system. The design flow rate is estimated to be 646 m^3/hr (380 cfm).

The materials of construction, corrosion allowances, and fabrication specifications for the equipment and piping used in the GEVS are compatible with UF_6 and HF and are noncombustible.

The Pumped Extract GEVS provides the ventilation and hazardous contaminant removal for the following systems, equipment, and areas.

It is connected via permanently ducted locations in the SBMs to:

A. The UF_6 Feed System, The Product Take-off System, the Tails Take-off System, the Product Blending and Sampling Vent Subsystem and Contingency Dump System.
B. All Liquid Sampling System autoclaves.
C. All discharge lines from mobile vacuum pump sets (To support the connection of on-line mass spectrometer standards, a mobile pump and trap set will be used to provide a local exhaust ventilation and no be connected to the Pumped Exhaust GEVs for a one time use).

It is connected via flexible exhaust hoses via a temporary local extract cross-connection, during initial plant operations, to places where piping is normally disconnected or equipment is opened, such as:

A. The Product Take-off System and Tails Take-off System pumping trains and the UF_6 Feed Purification Subsystem, Product Vent Subsystem, Tails Evacuation Subsystem and Product Blending and Sampling Vent Subsystem vacuum pump/ chemical trap sets.
B. The Liquid Sampling System autoclaves. The lines for the flexible duct are run to a point within approximately 0.9 m (3 ft) of each door opening. Approximately 1.8 m (6 ft) of flexible duct is connected to this point to enable access to all places where the autoclave UF_6 pipework is connected/disconnected.
C. The Product and Tails Low Temperature Take-off Stations.
D. The Solid Feed Stations and Feed Purification Low Temperature Take-off Stations.

E. The Blending Donor Stations and Blending Receiver Stations.

If the Pumped Extract GEVS stops operating, material within the piping is not released into the building because each of the Pumped Extract GEVS connections is piped into the top of the header to prevent entrained material from falling back into the building from the piping during system failure.

Mobile vacuum pump units that vent to the Pumped Extract GEVS are available in the UF_6 Handling Areas and the Product Blending and Liquid Sampling Area.

3.4.9.1.4 Design and Safety Features

The Pumped ExtractGEVS is designed to protect plant personnel, the public, and the environment, against uranium and HF exposure. Potential hazards include the release of UF_6 and HF to the building and/or environment, contaminated filters, and contaminated oil.

The system filters contaminated gases, and continuously monitors exhaust gas flow to the atmosphere. HF monitors are installed upstream and downstream of the filtration systems and in the exhaust stack to detect the release of hazardous materials to the environment. Alpha monitors are installed in the exhaust stack to detect the release of hazardous materials. A fault alarm is generated, in the event of a fault occurring within any of the monitors. The alarms are monitored in the Control Room.

The Pumped Extract GEVS filters are bag-in/bag-out. The Pumped Extract GEVS provides for continuous monitoring and periodic sampling of the gaseous effluent in the exhaust stack in accordance with the guidance in Regulatory Guide 4.16.

The Pumped Extract GEVS is designed to meet all applicable NRC requirements for public and plant personnel safety and effluent control and monitoring. The system designs also comply with applicable standards of OSHA, EPA, and state and local agencies.

The design and in-place testing of the Pumped Extract GEVS will be consistent with the applicable guidance in Regulatory Guide 1.140, ASME AG-1, and ASME N510. The system includes impregnated activated carbon filters for HF removal. As such, the portions of Regulatory Guide 1.140, ASME AG-1, and ASME N510, which address activated carbon filters for radioiodine removal are not applicable. The prefilter efficiency (60-65%) is based on testing in accordance with ASME AG-1. The HEPA filter efficiency (99.97%) is based on removal of 0.3 micron particles when tested in accordance with ASME-AG-1. The charcoal filter efficiency (99%) for removal of HF is based on Urenco operating experience and specifications. In-place testing and inspections of the filters will be performed in accordance with the guidance in Regulatory Guide 1.140. The frequency for performance of in-place filter testing and the acceptance criteria for penetration and leakage (or bypass) will be consistent with the guidance in Regulatory Guide 1.140. Qualification testing, to verify HF removal efficiency, of the impregnated carbon will be performed using ASTM D6646, modified to reflect removal of HF instead of hydrogen sulfide or using an actual in situ test such as described in document ETC4044158 (Qualification of Safe by Shape GEVS Filters). Laboratory testing of samples from the impregnated carbon filters will be performed on an annual basis. Throughout the useful life of the impregnated carbon, the impregnate is progressively consumed. The laboratory testing will determine the impregnant content within the sample. The amount of impregnant present in the sample is indicative of the remaining life of carbon filter for removal of HF. Carbon filter replacement will be based on the remaining absorption capacity. The remaining filters will be replaced on differential pressure (i.e., filter loading). There is no fixed frequency for filter replacement.

The Pumped Extract GEVS is connected to standby diesel generators through the short break load system.

3.4.9.1.5 Instrumentation

The process variables, pressure, fan speed, and damper positioning are all controlled automatically, but can be manually operated from a local control panel. The fan speed is automatically controlled to maintain negative pressure in the system. HF monitors measure the concentration of the gas in the air stream. Also, alpha monitors are used to measure the level of radiological contamination (alpha only) present in the air stream and are located in the exhaust stack. Deviations from specified values are indicated by alarms. HF monitors are installed upstream and downstream of the filtration system and in the exhaust stack to detect the release of hazardous materials. The HF and radiological monitoring devices have non-interruptible power supplies in order to continue to function during a general power failure.

The differential pressures across each of the filters (prefilters, HEPA filters, and impregnated activated carbon filters), across the entire filter train, and across the fan aremonitored to indicate required filter changes. Additionally, a carbon temperature sensor is located at the outlet of each carbon filter to detect possible ignition of the carbon.

The Pumped Extract GEVS control system is mounted in a Local Control Panel (LCP). The LCP provides automatic control of the fans, dampers, and pressure control valves and provides local control via a Local Operator Interface (LOI) that is mounted in the LCP. Required Plant Control System (PCS) monitoring points are hardwired from the LCP to the PCS Local Control Center (LCC), or directly from the effluent monitors or airflow monitor to the LCC.

The PCS provides no control function for the Pumped Extract GEVS. However, the Pumped Extract GEVS LCC communicates with the Central Control System (CCS), a subsystem within the PCS, so that comprehensive monitoring of the GEVS status can be carried out.

The Pumped Extract GEVS LCP contains train-independent programmable logic controllers (PLC) that provide automatic control and protection for the system and also the communication interface to the PCS. All equipment related to the control and LOI of the Pumped Extract GEVS is interfaced with this control panel.

Data that is monitored by the Pumped Extract GEVS LCP and passed to the LCC (PCS) includes stack flow rate, alpha monitor faults/overrides, HF monitor faults/overrides, fan status, damper positions, overall filter train differential pressure set point, and GEVS healthy/unhealthy status via a GEVS general alarm.

Any shutdown device for the filter train and fan is latched and required local operator action to reset.

The radiological activity and HF monitoring instruments are stand-alone and powered separately by UPS. Alpha activity and HF concentration levels are passed from these monitors to the LCC (PCS) via hardwired analog signals. The alarm functions are passed through the LCP as a general alarm. These alarms are overridden during maintenance or calibration.

3.4.9.1.6 Criticality Safety

There are two sources of uranic material to the Pumped Extract GEVS, rotary pump exhausts and temporary connections for maintenance and sampling rigs. An additional source of uranic material to the Pumped Extract GEVS comes from local extracts during the temporary configuration.

The rotary pump exhaust gas arising from the Product Vent Subsystem passes from the UF_6 cold trap through the activated carbon trap and alumina trap and finally through the rotary pump.

Excessive carry over from the cold trap to the carbon trap is avoided by the closure of a valve in the interconnection by a low pressure or a high temperature trip in the cold trap. The exhaust gas then passes through a trap filled with carbon that reacts irreversibly with the UF_6 and then passes through an activated alumina to remove HF. The gas is then pumped out into the Pumped Extract GEVS for final clean up. These chemical traps are replaced at regular intervals.The flexible exhaust hoses will be used to support product (and feed and tails) cylinder and pump changeout and maintenance activities in the separations plant and trace enriched particulate matter may be released.

The inflow to the Pumped Extract GEVS from the vacuum pumps exhausts is first passed through pre-filters which remove dust and protect the HEPA filters, through HEPA filterswhich remove uranium aerosols (mainly UO_2F_2 particles), a position for an optional additional filterthrough carbon filters for removing HF, and finally through another set of HEPA filter for removal of carbon fines and any additional uranium aerosols. Upstream of the filter train there is an HF monitor that will alarm if the concentration of HF within the air being drawn into the filters exceeds a pre-determined level. This will provide assurance that accumulation of uranium in the filters is not occurring. The filters are equipped with differential pressure instruments that will alarm on any one filter and trip on any two filters in a filter train on blockage or build-up of material. The nuclear criticality safety analysis (NCSA) for the Pumped Extract GEVS was performed to demonstrate compliance with the subcriticality requirement with an approved margin using MONK 8A (SA, 2001) simulations. The NCSA considered two trains of the Pumped Extract GEVS arranged in an end-to-end configuration, and included neutronic interactions with interconnecting piping/ducting and exhaust fans. Each Pumped Extract GEVS train contains an eight-bank (or leg) system, each containing four filters and a spare canister, resulting in an 8 X 5 filter array per train in the criticality model.

Mobile equipment considered for additional neutron interactions included a 21 liter vacuum cleaner and a change filter for each GEVS train. The use of the 21 liter vacuum cleaners is conservative relative to the planned use of only 7 liter vacuum cleaners for maintenance activities. In addition, a linear array of seven product vent vacuum pump/chemical trap sets was placed in front of the GEVS array to conservatively bound the maximum possible number of these skids that could be present in the SBM at any time. This placement of multiple pump/trap sets in close proximity of the GEVS filter trains represents an extreme bounding condition for the criticality analysis.

The SBD approach assumed a conservative enrichment of 6% and every available volume in the system filled with optimally moderated wet uranyl fluoride material. Flooding of the system up to 60 cm was assessed as a function of water depth from the floor. Spurious reflection was represented by a layer of 2.5 cm of water around each individual component or part. These conditions result in a k_{eff} of 0.9498, which is safely subcritical with acceptable margin.

Note that the SBMs are not credited with protection against tornado missiles, although the walls and roof of SBM-1001, where the Pumped Extract GEVS resides, is designed to withstand tornado missiles with poured-in-place concrete. However, the doorways are not missile resistant or have missile shields to protect the Pumped Extract GEVS inside the building.

The SBD features contain several inherent contingencies or conservatism such as: 6% U-235 enrichment; components or available volumes completely filled with enriched UO_2F_2/water mixture; optimum moderation and flooding; and no credit for component internal material. Loss of the SBD control due to an external event such as tornado missile strike during normal operation still requires multiple conditions to exist for enriched material in the components to have the potential for a criticality. There is a very low risk of inadvertent criticality at the facility following the tornado missile event on the basis of the following qualitative risk assessment:

- At the low licensed enrichment limit of 5.0% U-235, criticality requires moderation.
- Uranium will be dry/unmoderated throughout the entire enrichment process during normal operation (i.e., operations do not include solutions of 5.0% U-235).
- A sufficient mass for criticality can only accumulate through the reaction of uranium hexafluoride (UF_6) with moisture resulting from air in-leakage.

- High vacuum requirements for normal operation limit air in-leakage to very low levels, because intrusion of significant amounts of moderator would stop the process or operation.

With the criticality risk being low, an alternate approach was used for criticality analysis of the tornado missile impact, as application of the SBD approach is overly conservative and unnecessary in view of the multiple conditions required to exist for a potential criticality event. This approach was based on dust holdup accumulation as a function of pressure drop (filter performance degradation as dust builds up over the surface of the filter media). In this analysis, the quantity of fissile holdup was estimated based on the maximum capacity of the filters to function. In the worst case scenario it was estimated that maximum uranium mass holdup would be less than 13 kg uranium in a single 8 (leg) x 5 (filter) GEVS train, significantly less than the k_{eff} = 0.95 safe mass of 20.1 kg uranium listed in Table 5.1-1 of the Safety Analysis Report. Therefore, even if there were severe damage to the Pumped Extract GEVS, and there was loss of safe-by-design geometry of the system, there would be insufficient fissile mass to result in a criticality and thus such a criticality is not credible. This analysis verifies that tornado missile protection for the Pumped Extract GEVS is not required.

3.4.9.2 Cylinder Receipt and Discharge Building GEVS

The CRDB GEVS provides exhaust of potentially hazardous contaminants.

The GEVS servicing the CRDB is located on the second floor of the CRDB and is monitored from the Control Room.

3.4.9.2.1 Functional Description

Potentially contaminated exhaust air comes from the following rooms and services within the CRDB:

Ventilated Room	2,700 m^3/hr	(1,589 cfm)
Contaminated Material Handling Room	1,000 m^3/hr	(589 cfm)
PFPE Oil Recovery System	2,000 m^3/hr	(1,177 cfm)
Decontamination Workshop	12,300 m^3/hr	(7,240 cfm)
Chemical Laboratories	1,000 m^3/hr	(589 cfm)
Solid Waste Collection Room	700 m^3/hr	(412 cfm)

Air from the PFPE Oil Recovery System is part of the Decontamination Workshop discharge. Thus, the total airflow to be handled by the CRDB GEVS is 18,700 m^3/hr (11,000 cfm). Flow rates and capacities are preliminary and are subject to change during final design.

The design requirements for the facility provide a large safety margin between normal and accident conditions so that no single failure could result in the release of significant hazardous material. The amounts of UF_6 in the system also preclude the release of significant quantities of hazardous material from a single failure or multiple failures. Instrumentation is provided to detect abnormal process conditions so that the process can be returned to normal by operator actions.

These requirements and operating conditions also assure "as low as reasonably achievable" personnel exposure to hazardous materials and compliance with environmental and safety criteria.

3.4.9.2.2 Major Components

The CRDB GEVS consists of the following major components.

A. Duct system
B. Prefilter
C. HEPA filter
D. Impregnated carbon filter (impregnated with potassium carbonate)
E. Centrifugal Fan
F. Monitoring and controls (HF) before and after filters
G. Automatically controlled inlet and outlet isolation dampers
H. Exhaust stack
I. Gamma monitor and controls (prefilter and HEPA filter)
J. Monitoring and controls (alpha and HF) in exhaust stack
K. Stack Sampling system.

3.4.9.2.3 Design Description

The design bases and specifications are given in Table 3.4-16, Gaseous Effluent Vent System Design Bases (Cylinder Receipt and Dispatch Building).

The GEVS serving the CRDB consists of a duct network that serves all of the uranium processing systems and operates at negative pressure. The ductwork is connected to one filter station and vents through one fan. Both the filter station and the fan can handle 100% of the effluent. There is no standby filter station or fan. Operations that require the GEVS to be operational are shut down if the system shuts down. The system capacity is estimated to be 18,700 m^3/hr (11,000 cfm). A differential pressure controller controls the fan speed and maintains negative pressure in front of the filter station.

Gases from the UF_6 processing systems pass through the 85% efficient prefilter which removes dust and protects the HEPA filter, then through the 99.97% efficient HEPA filter which removes uranium aerosols (mainly UO_2F_2 particles). Finally the air passes through the 99% efficient activated carbon (potassium carbonate impregnated) filter which captures HF. The remaining clean gases pass through the fan, which maintains the negative pressure upstream of the filter stations. The clean gases are then discharged through the exhaust stack on the CRDB.

A minimum velocity of 12.7 m/s (2,500 ft/min) is maintained in the duct system in order to ensure that particulate contaminants are conveyed through the ductwork without settling. Each section of the duct system has an orifice plate to maintain a minimum air velocity. Each section also has a damper to balance the individual flows in the system. Flexible exhaust hoses have a capture velocity of 0.75 m/s (150 ft/min). Fume hoods shall have a capture velocity of 0.5 m/s (100 ft/min).

The CRDB GEVS provides ventilation and hazardous contaminant removal for the CRDB through ductwork, via hoods vented by booster fans to the technical services area, the chemical laboratory, and the vacuum pump rebuild workshop.

The materials of construction, corrosion allowances, and fabrication specifications for the equipment and ductwork used in the GEVS are compatible with UF_6 and HF and are noncombustible.

3.4.9.2.4 Design and Safety Features

The CRDB GEVS is designed to protect plant personnel against uranium and HF exposure.

The CRDB GEVS is designed to meet all applicable NRC requirements for public and plant personnel safety and effluent control and monitoring. The system design also complies with applicable standards of OSHA, EPA, and state and local agencies.

The system filters contaminated gases, and continuously monitoring exhaust gas flow to the atmosphere. HF monitors and alarms are installed upstream and downstream of the filtration systems and in the exhaust stack to detect the release of hazardous materials to the environment. The alarms are monitored in the Separation Plant Control Room.

The CRDB GEVS provides for continuous monitoring and periodic sampling of the gaseous effluent in the exhaust stack in accordance with the guidance in Regulatory Guide 4.16.

Gamma monitors measure the build-up of ^{235}U on prefilters and HEPA filter. Upon detection of high-high gamma levels in the CRDB GEVS filter, the CRDB GEVS trips.

The unit is located in a dedicated room in the CRDB . The filters are bag-in/bag-out. The carbon filter will be sampled and the absorption capacity checked per laboratory analysis. Filter replacement will be based on the remaining absorption capacity. The remaining filters will be replaced based on differential pressure (i.e., filter loading). There is no fixed frequency for filter replacement.

If the CRDB GEVS stops operating, material within the duct is not released into the building because each of the CRDB GEVS connections has a P-trap to catch entrained material that could otherwise fall back into the building from the ductwork during system failure.

The design and in-place testing of the CRDB GEVS will be consistent with the applicable guidance in Regulatory Guide 1.140, ASME AG-1, and ASME N510. The system includes a potassium carbonate impregnated activated charcoal filter for HF removal. As such, the portions of Regulatory Guide 1.140, ASME AG-1, and ASME N510, which address activated charcoal filters for radioiodine removal are not applicable. The prefilter efficiency (85%) is based on testing in accordance with ASME AG-1. The HEPA filter efficiency (99.97%) is based on removal of 0.3 micron particles when tested in accordance with ASME-AG-1. The impregnated charcoal filter efficiency (99%) for removal of HF is based on Urenco specifications. In-place testing and inspections of the filters will be performed in accordance with the guidance in Regulatory Guide 1.140. The frequency for performance of in-place filter testing and the acceptance criteria for penetration and leakage (or bypass) will be consistent with the guidance in Regulatory Guide 1.140. Qualification testing, to verify HF removal efficiency, of the impregnated charcoal will be performed using ASTM D6646, modified to reflect removal of HF instead of hydrogen sulfide. Laboratory testing of the impregnated charcoal filter of charcoal samples will be performed on an annual basis. Throughout the useful life of the impregnated charcoal, the impregnate is progressively consumed. The laboratory testing will determine the impregnant content within the sample. The amount of impregnant present in the sample is indicative of the remaining life of charcoal bed for removal of HF.

3.4.9.2.5 Instrumentation

The process variables, pressure, fan speed, and damper positioning are all controlled automatically. The fan speed is automatically controlled to maintain negative pressure in the system. The differential pressure across the filters is monitored and the fan speed is adjusted to maintain the design airflow rates. When a high pressure drop is detected across the filters, an alarm alerts the personnel that a filter change may be necessary. HF monitors measure the concentration of the gas in the air stream. Also, devices are used to measure the level of radiological contamination (alpha only) present in the air stream located in the stack. Deviations from specified values are indicated by alarms. HF monitors and alarms are installed upstream and downstream of the filtration system and in the exhaust stack to detect the release of hazardous materials. The HF and radiological monitoring devices have non-interruptible power supplies in order to continue to function during a general power failure.

Each area has an alarm that is activated in the event that the CRDBGEVS or the fan fails.

The CRDB GEVS control system is mounted in a Local Control Center (LCC). This is a stand-alone system that does not generate alarms during normal operation. The LCC provides automatic control of the fan and dampers and provides local control via a Local Operator Interface (LOI) that is mounted in the LCC.

The Central Control System (CCS) has no supervisory control over the CRDB GEVS control system. However, the CRDB GEVS LCC communicates with the CCS via the dual redundant process network so that comprehensive monitoring of the CRDB GEVS status exists. Data that is monitored is fan status, filter and duct pressure measurements, and damper status.

The CRDB GEVS LCC has one PLC that provides all automatic control and protection required for the system and also the communication interface to the PCS. All equipment related to the CRDB GEVS is directly wired to the LCC.

The radiological activity and HF monitoring instruments are stand-alone and powered separately. These instruments interface with the CRDB GEVS LCC via hardwired signals that indicate when alarm limits have been exceeded.

Any shutdown device for the filter train and fan is latched and requires local operator action to reset.

High-level environmental alarms will shut down the CRDB GEVS.

3.4.9.2.6 Criticality Safety

Within the CRDB Ventilated Room, chemical traps will be emptied and product cylinders may be brought into the room for valve changes and subsequent testing. In the case of the traps there will be a mixture of product, feed and dump traps with a few from the tails operations. The product traps will be 10 kg (22.0 lb) carbon traps with a maximum holdup of 12 kg (26.5 lb) UF_6. The traps will have been de-gassed prior to being removed from the plant and there will be very little of the UF_6 absorbed on the trap that could become airborne. There may be a small amount of carbon drawn into the CRDB GEVS as a result of emptying the traps. With approximately 20 carbon traps processed per year it is not considered credible that kilogram quantities of uranium would be drawn into the CRDB GEVS, before filters were changed out.

A possible scenario for the acute accumulation of enriched uranium from the Ventilated Room exists from the valve testing operations. For this operation a cylinder is taken into the room and the valve is removed. A new valve is fitted to the cylinder and the cylinder is then pressure tested. This involves pressurizing the container with nitrogen then evacuating. For this operation the cylinder is connected to a portable rig, which in turn exhausts to the CRDB GEVS. Since all pumps are lubricated with a UF_6 compatible oil there is the remote possibility that UF_6 could be pumped directly from the cylinder to the CRDB GEVS. Weight and temperature trips on the carbon trap in this rig prevent this transfer from occurring.

Within the CRDB Decontamination System there are a number of cleaning tanks. Components entering these tanks will have either been cleaned or de-gassed. It is not considered likely that significant quantities of uranium would enter the CRDB GEVS as a result of these decontamination operations or the subsequent processing of the residues. The facility also provides the plant with a sample bottle cleaning service. Type 1S sample bottles delivered to the facility will be cleaned provided that there is no more than 20 g (0.04 lb) of residual material within the bottles. Even if this was all UF_6 and the bottle was opened the operator would see white HF fumes and there may be some small quantity of UF_6 associated with the release. Many mal-operations would be required for the CRDB GEVS to see the quantity of material that would be needed to initiate a criticality.

Before pumps enter the CRDB Contaminated Workshop there is a requirement for them to be de-gassed prior to transfer. It would be unusual for pumps to enter the facility with significant quantities of UF_6 remaining within the pump, including UF_6 dissolved in the PFPE oil. On entering the facility the pumps are taken to the outgas area where the oil is removed. If dissolved UF_6 were present in the oil then there would be some fuming this would mainly be as a result of the dissolution of the UF_6 from the oil reacting with the water in the air. This would produce UO_2F_2 and HF. The HF would be drawn into the CRDB GEVS and the majority of the UO_2F_2 would remain with the oil. The number of product pumps that cannot be successfully de-gassed is small and it is not considered that a significant fraction of the uranium in the oil would enter the CRDB GEVS. Once the pumps have been transferred to the hydraulic table there will be uranium associated with the residual oil in the pump and some in the form of dry breakdown products. It is not considered possible that significant quantities of these will become airborne during the cleaning operations.

For the activities in the CRDB, the accumulation rate of uranium in the CRDB GEVS is very low compared with the safe mass of 12.2 kg U (26.5 lb U) assuming double batching and all the uranium were enriched to 6.0 $^{w}/_{o}$. These low accumulations coupled with regular sampling of filters, the weight trips and temperature trips, render a criticality accident highly unlikely.

3.4.10 Centrifuge Test and Centrifuge Post Mortem Processes

This section describes the basic components, functional requirements, and utilities required for operation of the Centrifuge Test Facility (CTF) and Centrifuge Post Mortem Facility (PMF). The CTF and PMF are located in the Centrifuge Assembly Building (CAB) as shown in Figure 3.3-13, Centrifuge Assembly Building, First Floor. Although these two facilities share a single room within the CAB, the allocated space for each operation is somewhat segregated and effectively treated as separate facilities. The sensitive operations undertaken within the facilities require access control for cleared personnel only. Criticality is not credible in these areas due to limits placed in the amount of ^{235}U allowed within this area. The functional requirements for the Centrifuge Test Facility and the Centrifuge Post Mortem Facility are presented in Table 3.4-17, Functional Requirements for Centrifuge Test and Post Mortem Facilities. Utility requirements for the two facilities are presented in Table 3.4-18, Utility Requirements for Centrifuge Test and Post Mortem Facilities.

3.4.10.1 Centrifuge Test Facility

3.4.10.1.1 Functional Description

The principal functions of the Centrifuge Test Facility (CTF) are to provide a means of functionally testing the performance of production centrifuges to ensure compliance with design parameters and to investigate production and operational problems. Testing can be performed on either a single centrifuge or two simultaneously.

Testing in the CTF is performed by feeding a stream of gaseous UF_6 into the centrifuge and removing enriched and depleted streams, Product and Tails, respectively. During this process, the centrifuge is maintained at the required operating frequency, temperature, and pressure, and samples are taken from the Product and Tails streams to enable determination of the separative capacity of the centrifuge under test.

The CTF interfaces with the following systems:

- Nitrogen System
- Compressed Air System
- Exhaust Filtration System

3.4.10.1.2 Major Components

The equipment located in the CTF comprises the following main components or sub-systems.

A. Centrifuge Cubicles
B. Centrifuge Converter
C. Cooling Water System
D. UF_6 Feed and Take-off System
E. UF_6 Feed Supply
F. UF_6 Take-off
G. CTF Feed and Take-off Vessel Charge and Recharge
H. Chemical Traps and Vacuum Pump Set
I. Mobile Calibration Pump Set
J. Sample Return Station
K. SCADA and LCS Control System
L. Uninterruptible Power Supply (UPS)
M. Centrifuge Crash Detection System
N. Centrifuge Handling System
O. Recirculation or Partial Recirculation Modes
P. Test Centrifuges

3.4.10.1.3 System Description

A. Centrifuge Cubicles.

The Centrifuge Cubicle consists of an insulated box manufactured from non-flammable thermal insulating material. Each cubicle has front and top opening doors to facilitate access for loading and making process and utility connections.

A specially designed centrifuge mounting base plate and stand provides a solid mounting and attachment to the floor. The test centrifuge is transported to a location immediately adjacent to the cubicle on a transport trolley. The centrifuge is then loaded into the cubicle using a jib crane with an electrically powered hoist. A platform is provided to make the process pipe work connections at the top of the centrifuge. This platform is located above the C15 and C16 IROFS.

Cooling water is supplied through the wall of the Centrifuge Cubicle to the test centrifuge and subsequently returned to a local, dedicated Cooling Water System (see 3.4.10.1.3 C).

A flexible exhaust hose connected to the Centrifuge Test and Post Mortem Facilities Exhaust Filtration System is positioned close to the centrifuge flange to provide local exhaust in the working area during disconnection from the facility.

B. Centrifuge Converter.

Each test position is provided with a variable speed converter. Each converter is suitable for driving a single centrifuge and provides a drive signal to the centrifuge motor. Drive up and drive down sequences are controlled by the SCADA system.

C. Cooling Water System.

The demineralized cooling water system is composed of two proprietary stand-alone units. Heating and chilling capacity is required to enable delivery of a stable temperature of water to both test positions. The cooling water system employs integral monitoring and alarms for each cubicle. Isolated supply and return connections are made to the test centrifuges mounted in the Centrifuge Cubicles. Flow rates and water feed and return temperature are monitored by the SCADA control system.

D. UF_6 Feed and Take-off System.

The feed and take-off system consists of two identical stainless steel vessels. The UF_6 capacity is 50 kg (110 lb). During normal operations the quantity of UF_6 in the system is approximately 20 kg (44.09 lb).

Each vessel is fitted with a jacket which carries an oil to maintain the vessel temperature at a normal temperature of –70°C (-94°F) when used in take-off mode or at a nominal temperature of 25°C (77°F) when used in feed mode. One vessel is designated as a feed vessel; the other is designated as a take-off vessel. The feed vessel is heated and the take-off vessel is cooled. When the feed vessel is considered empty, the temperature of the feed and take-off vessels are manually reversed from the SCADA system. The feed vessel is then designated as the take-off vessel. The contents of each vessel is calculated and displayed based on time, pressure, and process state. In addition, the vessel heater unit will shut down if the vessel pressure rises above predetermined pressures.

E. UF_6 Feed Supply.

Gaseous UF_6 is generated by a process of sublimation from the feed vessel. The energy required for sublimation is supplied by an oil based heater unit. Each vessel has a dedicated controller which provides a temperature control signal back to the heater unit. Temperature set points are dynamic and depend on which mode the HAT facility is in and whether the vessel is assigned as a feed or take-off vessel, via the setup in the SCADA system.

The feed is delivered from the feed vessel to the centrifuge, via a system of control valves and orifice plates, to achieve the required centrifuge feed pressure and flow rate.

F. UF_6 Take-off.

The enriched and depleted UF_6 streams are drawn from the centrifuge. Each stream is passed through an automatic control valve and orifice plate for flow measurement purposes. The streams are then merged and desublimed in the take-off vessel.

The piping/valve configuration allows each take-off stream to be sampled. A flexible tube connected to the Centrifuge Test and Post-Mortem Facilities Exhaust Filtration System is positioned close to the sample bottle during sample bottle connection and disconnection to provide local exhaust of the working area.

A flexible tube connected to the Centrifuge Test and Post Mortem Facilities Exhaust Filtration System is positioned close to the vessel during replacement of the UF_6 inventory to provide local extraction of the working area.

Three types of system shutdown are available : (1) a hard wired shutdown, (2) a controlled shutdown, and (3) a partially controlled shutdown. The hardwired shutdown is initiated by a manually operated emergency stop pushbutton or vessel overtemperature indication. The hardwired shutdown initiates the removal of the power supply to the dedicated vessel heater/chiller unit and results in the feed stream valves failing in a safe state. The controlled shutdown allows the PLC to control the format of the shutdown, and may be initiated by vessel over pressure, over temperature, or loss of compressed air. A partially controlled shutdown would be initiated in the event of a main power failure, enabled by backup power from the UPS system. In this circumstance the control system will enable an evacuation mode.

G. CTF Feed and Take-off Vessel Charging and Recharging.

The initial amount of UF_6 required to support Hot Acceptance Testing (HAT) for the Centrifuge Test Facility (CTF) will be received in approved containers. The material in these containers is transferred directly to the CTF feed/take-off vessel.

Material transfer is accomplished by first interconnecting the ambient temperature UF_6 gas source (30B cylinder) to the CTF feed/take-off vessel maintained at low temperature. The interconnecting piping and flexible tubing is evacuated and leak checked. When no leaks are confirmed, the feed/take-off vessel and UF_6 gas source are un-isolated allowing the source solid UF_6 to sublimate at ambient temperature then flow and desublime in the chilled feed/take-off vessel. When sufficient mass has been deposited in the feed/take-off vessel, the UF_6 source is isolated allowing all the UF_6 gas in the interconnecting piping to be deposited in the feed/take-off vessel leaving the interconnecting piping empty. The interconnecting piping is purged with gaseous nitrogen then disconnected. During disconnection a portable flexible exhaust hose is placed at the disconnected joint thereby evacuating any residual UF_6 or reaction gas to the CAB Exhaust Filtration System.

To accurately control the material transfer, the transfer process will be accomplished in a series of batches. The batch sizes are conservatively determined to assure the target mass of $UF_6$is not exceeded. Based on transfer times and mass flow rates determined from the first batch transfers, adjustments to subsequent batch transfers times ensure the transfers do not exceed the mass limit.

At some point it may be necessary to remove the remaining UF_6 from the CTF and replenish the system charge of UF_6. All of the UF_6 in the CTF rig will be transferred to one of the two feed/take-off vessels. The material will then be transferred from the vessel to a either a mobile CTF vessel, K300 cold trap, or multiple sample bottles (transfer vessel). To recharge the HAT rig, the transfer container(s) are first recharged from the feed system to 19.5 to 20.5 kg UF_6. This UF_6 is subsequently transferred via the CTF Sample Return Station into the HAT rig feed/take-off vessel.

H. Chemical Traps and Vacuum Pump Set.

The chemical traps and vacuum pump set (UF_6 Pump and Trap Set) are composed of a vertical stainless steel trap filled with activated carbon for removal of trace UF_6, and a vertical stainless steel trap filled with aluminum oxide for HF removal. Each trap is provided with inlet and outlet sintered stainless steel filters, and a two-stage rotary vane vacuum pump which is fitted with a nitrogen purge. The vacuum pump is suitable for exposure to HF and UF_6. The carbon trap and vacuum pump set has a weighing system that will automatically trip the associated vacuum pump on high carbon weight.

The vacuum pump has upstream and downstream oil filters to prevent oil migration and discharges to the Centrifuge Test and Post Mortem Facilities Exhaust Filtration System. The differential pressure across the exhaust filter is measured to indicate its condition. These items are co-located on a movable skid. An aluminum oxide oil absorption trap is fitted to the pump inlet piping, to prevent the back flow of oil from therotary vane pump into the inlet gas. The vertical cylindrical stainless steel unit contains solid aluminum oxide, accessible via a sealed top cover.

The exhaust filter located at the pump outlet is designed to recover oil from the gaseous exhaust, and comprises a physical filter, integral relief valve, float valve and pump oil return system.

The chemical traps and vacuum pump set provides:

1. Initial evacuation of the test centrifuge.
2. Removal of UF_6 from the centrifuge and connecting pipe work during testing in the event the normal take-off route becomes unavailable.
3. Removal of non-condensable gases, which accumulate in the chilled take-off vessel during testing.
4. System purging. At the end of testing, the centrifuge is evacuated and purged several times with nitrogen gas supplied from either a nitrogen cylinder or from the plant nitrogen system, via a manual control valve which limits the rate of pressure change.

I. Mobile Calibration Pump Set

The mobile Calibration Pump Set is composed of a rotary vane pump preceded by a liquid nitrogen chilled trap (cold trap). The cold trap removes any residual UF_6 and HF before the gas reaches the pump. The discharge from the pump will be removed via the CAB Exhaust Filtration System. A turbo pump is provided as part of the mobile pump set for calibrations. The mobile Calibration Pump Set is only used during calibration of pressure transducers.

J. Sample Return Station

The CTF has a dedicated sample return station. This sample return station has several functions:

a) to store empty sample bottles;
b) allows a batch transfer of UF_6 material in the sample bottles back into the take-off vessel:
c) preparation and conditioning of sample bottles prior to use;
d) initial fill of the feed vessel with UF_6

e) to empty feed/take-off vessels into a dedicated transport vessel

K. SCADA and LCS Control System

The CTF has a dedicated, standalone control system which includes a Supervisory Control and Data Acquisition System (SCADA) and a Local Control System (LCS). Control functions are performed by the LCS using a Programmable Logic Controller (PLC). Independent hard wired trips are used for safety related functions.

The operator interfaces with the SCADA system via a computer terminal. The operator interface displays real time values and trends of all instruments associated with the CTF and allows selection of various process modes and initiation of sequences.

L. Uninterruptible Power Supply (UPS).

A UPS is required to provide backup power to the control system, the operator interface (PC), and the hardwired safety circuits. In the event of a main power failure, a partially controlled shutdown will be initiated. In this circumstance the control system will enable an evacuation mode. Typically, this would involve draining the UF_6 from the centrifuges and isolating the power supply to the feed vessel heater unit. Critical components in the system remain functioning to support system shutdown. When the UPS power supply is exhausted, valves will move to the "fail safe" positions.

M. Centrifuge Crash Detection System.

Each test position is fitted with a Centrifuge Crash Detection System. This system consists of a shock sensor, that is strapped to the test centrifuge, and signal processing electronics. The signal processor provides a digital input to the control system PLC which, in turn, initiates a system shutdown and provides an alarm signal.

N. Centrifuge Handling System

The test centrifuge is transported to a location immediately adjacent to the cubicle and loaded into the cubicle using a dedicated power hoist. The CTF permanent platform provides access to make the piping connections at the top of the machine. A flexible extract duct connected to the Exhaust Filtration System will be positioned close to the centrifuge flange to provide local extraction in the working area during disconnection operations.

O. Re-circulation or Partial Re-circulation Modes

In the re-circulation process mode the feed, product and tails routes are isolated. This state may be selected by the operator at any time, providing process conditions allow. In partial re-circulation mode a small amount of fresh feed material is supplied via the feed line and the same amount is removed through product take-off gas from the centrifuge. In these modes, re-enrichment cannot occur due to physical limitations in the process system. Details of the piping configuration are contained in classified documentation.

P. Test Centrifuges

A small number of centrifuges, considered test centrifuges, are assembled in the Hot Test area of the CTF utilizing local crane. These test centrifuges are used to qualify the CTF test rig. Resultant loads from unplanned test centrifuge failures are restrained by the casing and floor mounting element (flomel). These components are designed so rotor debris do not penetrate the casing and the flomels do not break away from the floor. The inventory of UF_6 in each centrifuge is low. The UF_6 is contained by the outer casing. Additionally, these centrifuges are housed within enclosures. Further details of the test centrifuges are contained in classified documentation.

3.4.10.1.4 Design and Safety Features

Control of the Centrifuge Test Facility is performed by the SCADA system. All process states and sequences are initiated by the operator. The operator can override any sequence and take manual control of the facility.

There are few hazards associated with the facility. The principal hazards are centrifuge failure or failure of the feed vessel heating unit resulting in overheating of the vessel.

The design of the safety enclosure (centrifuge outer casing or "recipient") for centrifuge containment is well established and has been verified with experimental evidence. In the event of a heater control failure, the design is such that with continuous maximum heat input, no damage to the equipment can occur.

The heating circuits of the UF_6 feed and take-off vessels are each fitted with two resistance temperature detectors (RTDs). One RTD is used for control. The second RTD (IROFSC16) provides an independent fail-safe, hardwired trip of the heater unit. An independent thermocouple temperature sensor (IROFSC15) for automatic, fail safe, high temperature trip of the heater unit is also provided. The set point value has been selected to prevent the formation of UF_6 gas at above atmospheric pressure.

The power to these electrical circuits is also removed if the pressure at the UF_6 feed or take-off vessel exit rises above a pre-determined pressure.

Releases of UF_6 and HF to the atmosphere are minimized by operating the entire process below atmospheric pressure. Before carrying out disconnections or connections of equipment the piping is evacuated and nitrogen purged. Flexible suction hoses connected to the Exhaust Filtration System remove any releases from the work area. Before discharge, all gases are treated with activated carbon and alumina to remove any residual traces of UF_6 and HF. The cleaned gases are then discharged into the Exhaust Filtration System for final filtration, chemical absorption, and monitoring prior to release.

For additional safety, system defense-in-depth protection features include redundant protection and operability sensors, providing one out of two action. Provision is required to reserve digital input signals to the PCS from IROFS that have tripped.

3.4.10.2 Centrifuge Post Mortem Facility

3.4.10.2.1 Functional Description

The principal functions of the Centrifuge Post Mortem Facility (PMF) are as follows:

A. Facilitate dismantling of non-contaminated or contaminated centrifuges using equipment and processes that minimize the potential to contaminate personnel or adjacent facilities.

B. To enable investigations to be undertaken to pinpoint potential centrifuge failure mechanisms or life limiting features

C. Collect contaminated components for transfer or storage

Operational experience has shown that the demand for centrifuge post mortems is infrequent.

Centrifuges are brought into the PMF from the cascade hall on a specially designed transport cart. The PMF is used for careful, diligent dismantling of centrifuges. The centrifuges will have been operating with UF_6 and are therefore contaminated. The facility is equipped with radiological monitoring devices, toilets and washing facilities, and hand, foot, and clothing personnel monitors to detect surface contamination. Wash water is collected and monitored for contamination prior to discharge. All ventilation exhausts are routed through the PMF Exhaust Filtration System. Flexible exhaust hoses that are connected to the Centrifuge Test and Post Mortem Facilities Exhaust Filtration System, are positioned by the operator locally to the centrifuge prior to commencing the dismantling process. Potentially contaminated components are transferred out of the PMF prior to disposal.

Atmospheric pressure in the PMF is maintained slightly negative during contaminated or potentially contaminated processes. For additional functional and utility requirements see Table 3.4-17, Functional Requirements for Centrifuge Test and Post Mortem Facilities, and Table 3.4-18, Utility Requirements for Centrifuge Test and Post Mortem Facilities.

3.4.10.2.2 Major Components

The equipment located in the PMF includes the following:

A. Centrifuge dismantling facility

B. Centrifuge manipulation equipment

C. Inspection facilities

D. Solid and liquid waste collection and segregation facilities.

3.4.10.2.3 System Description

A. Centrifuge Dismantling Facility.

The centrifuge dismantling facility is composed of a stand onto which the centrifuge is mounted providing access to the top and bottom of the centrifuge, a local jib crane, and miscellaneous tools.

The stand has an elevated working platform to allow access to the top of the centrifuge. The platform is large enough to accommodate two people, necessary tools to enable dismantling, and a lay down area for potentially contaminated components.

A jib crane is located over the stand to enable centrifuge removal from and replacement to the transport cart, and to facilitate loading and unloading the stand.

Miscellaneous tools are used to dismantle the centrifuge. These tools are solely for the purpose of centrifuge post mortem and are stored adjacent to the dismantling facility.

A flexible exhaust hose from the Centrifuge Test and Post Mortem Facilities Exhaust Filtration System is positioned adjacent to the centrifuge enclosure to provide local exhaust in the working area during dismantling.

The dismantling facility has to deal with both intact and crashed centrifuges. The dismantling processes are consequently different.

Dismantling of intact centrifuges is relatively easy. Removal of the internals is facilitated by use of the jib crane.

Crashed centrifuges yield fragmented debris. To contain the spread of potentially contaminated debris, a small quantity of water is used for contamination control Removal of the internals often requires inversion of the centrifuge casing to retrieve component parts for subsequent inspection. This operation is undertaken using the centrifuge manipulation equipment.

Operational restrictions are placed on personnel undertaking post mortem activities. These are summarized as follows:

- All personnel must utilize personal protection equipment that is identified via a risk assessment and follow operational procedures to undertake post mortem activities.
- For contamination control, the quantity of water per centrifuge is limited.
- Water for contamination control requires collection and monitoring for contamination prior to discharge.
- Ventilation exhaust must be routed through appropriate HEPA filters in the Centrifuge Test and Post Mortem Facilities Exhaust Filtration System.

B. Centrifuge Manipulation Equipment.

The centrifuge manipulation equipment is a piece of mechanical handling equipment that provides for rotation of the centrifuge casing.

C. Inspection Facilities.

An inspection area is located within the PMF to facilitate collection of evidence to support failure analysis. The inspection facilities have an inspection bench, portable lighting, a microscope, an endoscope, and a digital video camera.

D. Solid and Liquid Waste Collection and Segregation Facilities.

Waste from centrifuge post mortem consists of small quantities of both aqueous or non-aqueous liquid and dry solids.

The aqueous or non-aqueous liquid waste is transferred into a plastic container. This container is stored in the PMF until it is full. The full container is subsequently transferred out of the PMF. It is then characterized, packaged, and sent for disposal.

The solid wastes are segregated into like materials prior to disposal. Some of the items are required to be broken down to reduce volume and ease handling. This is carried out using a mechanical bench saw. Wastes are then bagged and monitored to determine the level of surface contamination. The containerized waste is then removed from the PMF for disposal.

3.4.10.2.4 Design and Safety Features

Operational experience in Europe has shown that centrifuge post mortems are infrequent events. It is envisioned that no post mortem activity is required during early operational life. Consequently, it is expected that no more than 20 post mortems would be undertaken over the life of the facility.

Waste material such as carbon fiber, metal (principally aluminum), oil, paper, wipes, gloves, and contaminated disposable clothing or flushing water is generated. Operational experience in Europe has shown that uranium is found as surface contamination in the form of either UO_2 F2 or uranium tetrafluoride (UF_4).

3.4.10.3 Centrifuge Test and Post Mortem Facilities Exhaust Filtration System

The Centrifuge Test and Post Mortem Facilities Exhaust Filtration System provides exhaust of potentially hazardous airborne contaminants from the Centrifuge Test and Post Mortem Facilities. The system also ensures the PMF is maintained at a negative pressure with respect to adjacent areas during contaminated or potentially contaminated processes. The system is shown on Figure 3.4-20, Process Flow Diagram Centrifuge Test and Post Mortem Facilities Exhaust Filtration System.

The Centrifuge Test and Post Mortem Facilities Exhaust Filtration System is located in the Centrifuge Assembly Building and is monitored from the Control Room.

3.4.10.3.1 Functional Description

Potentially contaminated exhaust air comes from the Centrifuge Test and Post Mortem Facilities.

The design requirements for the facility provide a large safety margin between normal and accident conditions so that no single failure could result in the release of significant hazardous material. The amounts of UF_6 in the system also preclude the release of significant quantities of hazardous material from a single failure or multiple failures. Instrumentation is provided to detect abnormal process conditions so that the process can be returned to normal by operator actions.

These requirements and operating conditions also assure "as low as reasonably achievable" personnel exposure to hazardous materials and compliance with environmental and safety criteria.

3.4.10.3.2 Major Components

The Centrifuge Test and Post Mortem Facilities Exhaust Filtration System includes the following major components.

- Duct system
- Prefilters
- Impregnated carbon filters
- HEPA filters
- One Exhaust Filtration Unit

- Exhaust stack
- Exhaust Stack alpha monitor
- Exhaust Stack HF monitor.

3.4.10.3.3 Design Description

The Centrifuge Test and Post Mortem Facilities Exhaust Filtration System consists of a duct network that serves the Centrifuge Test and Post Mortem Facilities and operates at negative pressure. The Centrifuge Test and Post Mortem Facility Exhaust Filtration System is a 100% outside air system. The system consists of one, 100% roof-mounted air conditioning unit that provides supply air and one, 100% Special Filter Unit (SFU) that handles the exhaust air. The SFU is located inside the CAB. No exhaust air is recirculated. A humidifier which utilizes humidification nozzles in the supply air duct is also provided.

Operations inside the Centrifuge Test and Post Mortem Facility require continuous operation of the Exhaust Filtration System. The exhaust air flow is maintained constant using an air flow controller and the supply airflow is automatically controlled using a variable frequency drive for the air supply fan. The combined supply and exhaust controls are arranged to maintain a slightly negative pressure inside the Centrifuge Test and Post Mortem Facility with respect to adjacent areas.

The SFU consist of a series of pre-filters, activated charcoal filters, HEPA filters and an exhaust fan arranged in common enclosure. Exhaust air pressure though the SFU to an exhaust stack on the roof of the CAB.

The Centrifuge Test and Post Mortem Exhaust Filtration System consist of an owner specified filter configuration consistent to meet the requirements of the NEF Environmental Plan. The basic filter arrangement consists of a prefilters, activated carbon filter, and HEPA filter, and is designed to remove dust/debris, HF, uranic particles, and any other hazardous material dictated by environmental requirements from the air stream. The remaining clean gases pass through a fan, which maintains the negative pressure upstream of the filter station. The clean gases are then discharged through the stack on the Centrifuge Assembly Building.

A minimum velocity is maintained in the duct system in order to ensure that particulate contaminates are conveyed through the ductwork without settling. Each section also has a damper to balance the individual flows in the system. Flexible exhaust hoses are provided in both the Centrifuge Test Facility and the PMF.

A fume hood is also provided in the PMF. After obtaining a process sample from the CTF during Hot Acceptance Testing, the sample bottle and valve assembly are moved to the fume hood. The valve assembly is removed and a sample bottle seal is intalled. This operation is conducted in the fume hood to provide additional protection to the worker. Use of the fume hood is not an IROFS control. There are no liquids and no sub-sample operations conducted in the CTF.

The materials of construction, corrosion allowances, and fabrication specifications for the equipment and ductwork used in the Exhaust Filtration System are compatible with UF_6 and HF and are noncombustible.

3.4.10.3.4 Design and Safety Features

The Centrifuge Test and Post Mortem Facilities Exhaust Filtration System is designed to protect plant personnel against uranium and HF exposure.

The Centrifuge Test and Post Mortem Facilities Exhaust Filtration System is designed to meet all applicable NRC requirements for public and plant personnel safety and effluent control and monitoring. The system design also complies with applicable standards of OSHA, EPA, and state and local agencies.

The Centrifuge Test and Post Mortem Facilities Exhaust Filtration System provides for continuous monitoring and periodic sampling of the gaseous effluent in the exhaust stack in accordance with the guidance in USNRC Regulatory Guide 4.16.

The system filters contaminated gases and continuously monitors exhaust gas flow to the atmosphere. The system also provides primary confinement for the Centrifuge Test and Post Mortem Facility by maintaining the Centrifuge Test and Post Mortem Facility at a negative pressure relative to adjacent areas during contaminated or potentially contaminated processes. An HF monitor and associated alarm and an alpha radiation monitor and associated alarm are installed in the exhaust stack to detect the release of hazardous materials to the environment.

3.4.10.3.5 Instrumentation

The process variables, pressure, fan speed, and damper positioning are all controlled automatically. The differential pressure across the filters is monitored to provide indication of when filter replacement is required. An HF monitor measures the concentration of HF gas in the air stream. Also, a radiation detector is used to measure the level of radiological airborne contamination (alpha only) present in the air stream located in the stack. Deviations from specified values for HF and alpha radiation are indicated by alarms. The HF and alpha radiation monitoring devices have non-interruptible power supplies in order to continue to function during a general power failure.

3.4.11 (See SAR § 12.2.2.9) Material Handling Processes

3.4.11.1 Cylinder Receipt and Shipping

(See SAR § 12.2.2.9.1) The CRDB provides for handling of feed cylinders, product cylinders, semi-finished product cylinders, prepared empty cylinders and UBCs, and provides space for the following services:

- Cylinder loading and unloading
- Inventory weighing
- Secure internal storage
- Preparation and storage area for overpack/protective structural packaging.

The cylinders are received, shipped offsite, stored, and transferred to and from the UF_6 Handling Areas, and UBC Storage Pad.

Prepared empty cylinders, semi-finished product cylinders, full feed cylinders, and final product cylinders are stored in the CRDB. .

Full UBCs and empty feed cylinders are staged in the CRDB to facilitate movement to the UBC Storage Pad. They are transported through the CRDB and stored in the UBC Storage Pad. The CRDB does not have the capacity to store all feed and product cylinders; therefore, additional storage for feed and empty product cylinders is provided in the UBC Storage Pad.

The CRDB layout is shown on Figure 3.3-12, Cylinder Receipt and Dispatch Building First Floor, and Figure 3.3-13, Cylinder Receipt and Dispatch BuildingSecond Floor. The UF_6 Feed cylinder delivery and storage requirements are presented in Table 3.4-19, UF_6 Feed Cylinder Delivery and Storage Requirements.

3.4.11.1.1 Description

(See SAR § 12.2.2.9.2) The majority of the floor area in the CRDB is used as a storage or staging area for feed and product cylinders. The cylinders are placed on cradles to stabilize them while they are stored in this area. Different size cradles are provided for 48-in and 30-in cylinders. The cylinders are positioned such that access is possible from an overhead crane.

Trucks carrying UF6 (48Y) fee, tailes and (30B) product cylinders with overpacks are processed in and out of the building through the main vehicle loading bay. This bay is equipped with vehicle access platforms that aid with cylinder loading and unloading operations.

Unloaded trucks either leave the site or remain in a staging area adjacent to the CRDB. Trucks in this staging area await cylinders that are to be shipped from the site.

3.4.11.1.2 Equipment

The following equipment is used for cylinder handling in the CRDB.

A. Vehicle Loading Area

(See SAR § 12.2.2.9.3 A.)The vehicle loading and unloading platforms are located adjacent to the main transport vehicle access doorways. These platforms provide a safe method of transfer to the vehicle trailer while loading and unloading activities are in progress.

B. Double Girder Bridge Cranes.

(See SAR § 12.2.2.9.3 B.)Three double girder bridge cranes handle the cylinders in the CRDB. The cranes travel across two sets of rails. The west pair of rails supports two bridge cranes that can traverse the entire length of the CRDB. One bridge crane is supported by the east pair of rails and this can traverse the east half of the CRDB north of the Bunkered Area. They are operated by an automated control system and equipped with remotely operated grabs. Each hoist has a maximum lift of 9.75 m (32 ft). Crane movement requirements are presented in Table 3.4-20, Crane Movement Requirements. The minimum lift is based upon the following data:

- Floor to top height of a vehicle mounted ISO container 4.1 m (13.4 ft)
- Lift clearance between ISO container and underside of cylinder 0.6 m (2 ft)
- Typical length of a universal cylinder grab (including fixing) 2.0 m (6.6 ft)
- Allowance for unknown effect of a 48-in cylinder overpack 1.0 m (3.25 ft)
- Total 7.9 m (25.9 ft)

The crane specifications are as follows:

• West Span	18.75 m	(61.5 ft)
• East Span	20.1 m	(66 ft)
• Capacity	20 MT	(44,100 lb)
• Hoist lift height	9.75 m	(32 ft)
• Hoist lift speed (Variable Frequency Drive (VFD))	6 m/min	(20 ft/min)
• Travel length (for 2 West side cranes)	231.2 m	(758.5 ft)
• Travel length (for East side crane)	58.7 m	(192.5 ft)
• Bridge travel speed (VFD)	45.7 m/min	(150 ft/min)
• Brake type	Direct Current Disc	

ISO containers are International Organization for Standardization Series 1 freight containers that are supplied in accordance with the ISO 668 Standard. These containers are used for intercontinental shipping. They are 2,438 mm (8 ft) wide and are available in a variety of heights ranging from 2,438 mm (8 ft) to 2,896 mm (9.5 ft).

C. Scales.

(See SAR § 12.2.2.9.3 C.) Each cylinder that enters or exits the CRDB is weighed. Weigh scales capable of weighing a load of 17 MT (37,500 lb) and capable of accepting a load of 20 MT (44,100 lb) are required on each end of the CRDB. One set of scales is utilized in the area adjacent to the cylinder truck loading/unloading bay. Another scale is located in the south portion of the CRD adjacent to the rail transporter. The scales are capable of weighing to a tolerance of ±2.5 kg (±5.5 lb). The scales have a reader and printout facilities.

D. Powered Vehicles And Rail Transporters.

(See SAR § 12.2.2.9.3 D.) Cylinders are transported within the CRDB and UF_6 Handling Areas on rail transporters and between the CRDBand UF_6 Handling Areas, to the UBC Storage Pad via powered vehicles. A single girder mobile gantry crane is used to manage the cylinders in the UBC Storage Pad.

3.4.11.1.3 Cylinder Specifications

Cylinders stored and handled in the CRDB vary in size and weight from 30B cylinders to 48Y cylinders. The cylinders have the following characteristics:

<u>30B Cylinder</u>

Weight of UF_6	2,277 kg	(5,020 lbs)
Gross cylinder weight	2,912 kg	(6,420 lbs)
Diameter	762 mm	(2.5 ft)
Length	2,070 mm	(6.8 ft)

<u>48Y Cylinder</u>

Weight of UF_6	12,501 kg	(27,560 lbs)

Gross cylinder weight	14,860 kg	(32,761 lbs)
Diameter	1,232 mm	(4.08 ft)
Length	3,728 mm	(12.25 ft)

3.4.11.1.4 CRDB Storage and Processing Areas

(See SAR § 12.1.2.9.4) Cylinder storage and processing areas are shown on Figure 3.3-12, Cylinder Receipt and Dispatch Building First Floor, and on Figure 3.3-13, Cylinder Receipt and Dispatch BuildingSecond Floor.

The CRDB accommodates the following approximate areas:

Site vehicle access/ loading bays (2 ea.)	400 m^2 (each)	(4,306 ft^2) (each)
Preparation Area/Marshalling/ Weighing Area	715 m^2	(7,700 ft^2)
Cylinder Storage Area (usable area)	1,942 m^2	(20,900 ft^2)
Cylinder Transporting and Stillage Area	603 m^2	(6,500 ft^2)

3.4.11.1.4.1 Cylinder Storage Area

Feed material and product material is stored under vacuum in corrosion resistant Type 48Y and Type 30B cylinders, respectively. The CRDB provides enough space to store about 320 cylinders and overpacks in this 20,900 ft2 (1,942 m2) area, depending on the types of cylinders stored. If overpacks are stored elsewhere in the CRDB, this area can store approximately 210 each 48Y cylinders and 110 each 30B cylinders. These cylinders can be stored without providing room for cylinder maintenance because they are only in temporary storage.

3.4.11.1.5 Cylinder Deliveries

Cylinder deliveries to and from the site generally consist of feed deliveries to the site, product transport from the site, and return of supplier empty feed cylinders. At the NEF, full 48Y cylinders are delivered one cylinder per delivery vehicle. New empty 48-in cylinders are typically delivered nine cylinders per delivery vehicle. Empty washed out 48-in cylinders are typically delivered six cylinders per vehicle. The 30-in product cylinders are typically delivered four cylinders per 6 m (20 ft) of delivery vehicle. The number of product cylinders per vehicle can vary and a typical shipment frequency would be one vehicle per 3 days (122 shipments per year). This information for a total plant capacity of 3 million SWU per year is summarized below. The figures in the following table represent a management strategy whereby empty feed cylinders are refilled with tails and new empty 48Y cylinders are provided to the feed suppliers. This stategy is implemented to reduce the number of NEF deliveries.

Delivery Description	Number cylinders per year	Number cylinders per vehicle	Number deliveries / shipments per year
Feed In	690	1	690
Empty Product In	350	4	88
Product Out	350	4	88

Delivery Description	Number cylinders per year	Number cylinders per vehicle	Number deliveries / shipments per year
Empty Feed Out	65	6	11
Total	-	-	877

3.4.11.2 Cylinder Transport within the Facility

3.4.11.2.1 Cylinder Testing

All 30B cylinders are inspected internally for criticality safety purposes. Internal inspections are performed in accordance with either the LES QA Program or an approved supplier's QA Program.

Cylinders received at the site are expected to be in good working condition. Cylinders with deficient conditions are returned to an approved supplier for corrective maintenance and testing in accordance with ANSI N14.1-2001, provided the cylinder fully complies with all DOT transport requirements.

Cylinders with deficient conditions that do not fully comply with all DOT transportation requirements must be corrected at the site. Such corrective maintenance may include valve replacement, plug replacement and post maintenance testing on containers with UF_6. Corrective maintenance and testing is performed in the CRDB Ventilated Room in accordance with ANSI N14.1-2001 and the LES QA Program.

New or cleaned cylinders found with deficient conditions are similarly returned to and approved facility for corrective maintenance, testing and/or inspection in accordance with ANSI N14.1-2001. If the nature of the deficiency is minor and within the capabilities of the site to correct and test, then such work and testing may be conducted in accordance with approved procedures in approved work areas. Testing on such cylinders may be conducted in the CRDB Ventilation Room to utilize existing test equipment.

3.4.11.2.2 Cylinder Transport Between the CRDB and the UF_6 Handling Areas

A rail system extends between the CRDB and all of the UF_6 Handling Areas. The rail has two independent rail transporters. Each of the transporters has a drawbridge that links the transporter to the appropriate station or adjoining transporter. The UF_6 rail transporters are depicted in Figure 3.4-21, Rail Transporter Area Equipment Drawing. Its function is the transfer of cylinders to the appropriate Product Blending System Donor Station, Product Blending System Receiver Station, Product Liquid Sampling Autoclave, Solid Feed Station, Product Low Temperature Take-off Station, Tails Low Temperature Take-off Station or Feed Purification Low Temperature Take-off Station.

Cylinders are empty product, product, empty feed, feed, empty UBCs, UBCs or semi-finished product cylinders. Each of the transporters may be battery powered or fed by an electric feeder embedded in the concrete.

3.4.11.2.3 Cylinder Transport to Support Centrifuge Test Facility Hot Acceptance TestingFeed Material Initial Fill

NEF Centrifuge Test Facility (CTF) Hot Acceptance Testing (HAT) feed vessel initial fill will precede CRDB completion by several months. Accordingly, transport truck delivery and receiving of the initial feed material 30B cylinders will be accomplished at the Centrifuge Assembly Building (CAB). The initial fill material will be delivered in one or more 30B cylinders. Shipment of UF_6 in a 30B container requires a protective over pack when containing more than 11.3 kg. DOT PACKAGE DESIGN CERTIFICATE USA/0411/H(U)-96, Revision 1 allows shipment of containers without over pack protection provided no more than heel quantities (11.3 kg) of UF_6 are within the container. Compliance with this certificate permits transport without fire protective over packs.

Transport trucks(s) will be received and unloaded outside the CAB. The after receipt inspection, the cylinders will be moved by diesel or battery powered mobile equipment into the CAB, placed on suitable stillage and weighed.

After the CTF feed vessel initial charge is complete, the cylinder is removed from the CAB by diesel or battery powered mobile equipment. The cylinder is reloaded onto the delivery truck to return to the supplier.

3.4.11.3 UBC Storage Pad

(See SAR § 12.2.1.4) The NEF utilizes an area outside of the CRDB for storage of UBCs. The UBC Storage Pad is used for storage of cylinders containing UF_6 that is depleted in ^{235}U. It is also used as buffered storage of full and empty feed cylinders and empty product cylinders. Access to the cylinder storage pad is controlled. Access to the cylinder storage area is controlled in accordance with IROFS 36e, 50a and 50h. The tails storage requirements are presented in Table 3.4-21, UBC Storage System Requirements. The UBC Storage Pad will be developed in sections over the life of the facility.

3.4.11.3.1 Description

Space is allocated to provide storage of UBCs for 30 years of output from the facility. The uranium byproduct material is stored under vacuum in corrosion resistant Type 48Y cylinders. Empty feed cylinders are also Type 48Y cylinders. Empty product cylinders are Type 30B cylinders

The UBC Storage pad can accommodate storage of up to 15,727 48Y cylinders. The cylinders are stacked two high. Cradles are used to store the cylinders approximately 200 mm (8 in) above ground level.

3.4.11.3.2 Equipment

The UBC Storage Pad layout is based on moving the cylinders with cranes and either diesel or electric powered vehicles. Two single girder mobile gantry cranes are used to load the depleted UF_6 cylinders onto the powered vehicles in the CRDB. The vehicles transport the cylinders from the CRDB to the mobile gantry crane in the UBC Storage Pad. The mobile gantry crane is used to remove the cylinders from the powered vehicles and place them on the UBC Storage Pad. The mobile gantry crane has 90-degree pivot steering to facilitate a zero-turn radius for the restricted confines of the UBC Storage Pad. The mobile gantry crane is designed to double stack the cylinders. The crane utilizes a specialized hydraulic cylinder grab that can rotate cylinders 90-degrees. The hydraulic cylinder grab is designed to lift 48Y cylinders by the side flanges and 30B cylinder by the end ring flanges. When cylinders exit the UBC Storage Pad, the mobile gantry crane and powered vehicles are used to move the cylinders.

The specifications for the single girder mobile gantry crane are as follows:

Span	9.4 m (31 ft)
Wheel Base	6.7 m (22 ft)
Capacity (crane)	27.2 MT (60,000 lb)
Capacity (cylinder grab)	20 MT (44,000 lb)
Hoist lift height (maximum)	7.0 m (23 ft)
Hoist lift speed	8.8 m/min (29 ft/min) unloaded
	7.6 m/min (25 ft/min) loaded
Traverse speed	16.5 m/min (54 ft/min)
Drive	2-wheel drive
Drive Speed	6.0 kph (3.7 mph) unloaded
	5.6 kph (3.5 mph) loaded
Travel length	641 m (2,100 ft)
Bridge travel speed (VFD)	49 m/min (160 ft/min)
Trolley travel speed (VFD)	24 m/min (80 ft/min)
Brake type	hydraulic, with parking brake Emergency "e-stops" located above each wheel well, stops and shuts down crane

3.4.11.3.3 UBC Storage

The selected storage option is a double-stacked cylinder storage using a mobile gantry crane and powered vehicles for cylinder handling. This type of storage arrangement facilitates visual inspection and removal of the cylinders for maintenance.

The UBC Storage Pad is designed to provide storage for UBCs and full production buffered storage of full feed cylinders, empty feed cylinders, and clean, empty product cylinders. The final UBC Storage pad is sized to accommodate 15,727 cylinders (capacity equivalent to 30 years of facility operation). These cylinders are stacked two high. The UBC Storage Pad is constructed in approximately 112,000 ft^2 (2.6 acre) sections throughout the operating life of the facility to ensure sufficient cylinder storage capacity. The total area for UBC storage for facility operation is approximately 8.5 ha (21 acres). These areas This area includes a 10% allowance for staging activities, but does not include allocated areas for access or perimeter roads.

3.4.11.3.4 Empty Feed Cylinder Storage

Empty feed cylinders require a radiological cooling period in storage prior to return to the customer. The cooling period is dependent upon the emitted dose, and is typically three months. No additional spacing is required for gamma reading purposes. The area allocated per empty feed cylinder is 8 m2 (86 ft^2). An allowance has been made for approximately 24-months supply of storage of empty feed cylinders. This requires a space large enough to accommodate 150 48Y cylinders (double stacked), a total of 600 m2 (6,458 ft^2). With the 10% allowance for staging purposes, a total area of 660 m^2 (7,104 ft^2) is required. The area allocated for empty feed cylinders is located in the UBC Storage Pad.

3.4.11.3.5 Feed Cylinder Storage

Feed cylinder storage is provided on the UBC Storage Pad as additional storage capacity because of the limited amount of room in the CRDB. The area allocated per feed cylinder is 8 m^2 (86 ft^2). An allowance has been made for the storage of 24-months supply of feed stock. This requires a space large enough to accommodate approximately 1500 48Y cylinders (double stacked), a total area of approximately 6,000 m^2 (64,583 ft^2). With the 10% allowance for staging purposes, a total area of approximately 6,600 m^2 (71,042 ft^2) is required. The area allocated for feed cylinders is located in the UBC Storage Pad.

3.4.11.3.6 Empty Product Cylinder Storage

Clean, empty product cylinder storage is provided on the UBC Storage Pad as additional storage capacity because of the limited amount of room in the CRDB. The area allocated per product cylinder is 2.4 m^2 (26 ft^2). An allowance has been made for the storage of approximately 12-months supply of clean, empty product cylinders. This requires a space large enough to accommodate approximately 350 30B cylinders (single stacked), a total of 840 m^2 (9,042 ft^2). With the 10% allowance for staging purposes, a total area of 924 m^2 (9,946 ft^2) is required. The area allocated for empty product cylinders is located in the UBC Storage Pad.

3.4.12 References

Edition of Codes, Standards, NRC Documents, etc that are not listed below are given in Table 3.0-1.

SA, 2001. Serco Assurance, ANSWERS Software Service, "Users Guide for Version 8 ANSWERS/MONK(98) 6," 1987-2001.

3.4.13 Section 3.4 Tables

Table 3.4-1 UF_6 Feed System Design Basis

Equipment Requirements			
Component	**Quantity Per**		
	Cascade Hall	**Separations Building Module**	**Plant Total**
Solid Feed Station and Associated Valve Hot Box	5 (Note 1)	10	30
Feed Purification Low Temperature Take-off Station and Associated Valve Hot Box	2	4	12
Feed Purification UF_6 Cold Trap	2	4	12
Feed Purification Vacuum Pump/ Chemical Trap Set	2	4	12
Note 1: Four stations support the current plant SWU capacity and the fifth station supports the planned SBM expansion and operational flexibility.			

Flow	**Per Cascade Hall**	**Number Cascades**
Continuous Minimum – kg/hr (lb/hr)	11.4 (25)	1
Continuous Maximum – kg/hr (lb/hr)	174 (384)	8

Solid Feed Station	
Number per Cascade Hall	5
On-line	3
Standby or Preparation	1
Spare (Standby, Prep, Maintenance)	1
Cylinder Type	48Y
Capacity UF_6, kg (lb)	12,501 (27,565)
Heating Requirements	Air, via dedicated heater
Temperature, °C (°F)	61 (142)

Solid Feed Station Weighing System	
Type	Load Cell
Capacity, kg (lb)	16,000 (35,300)

Feed Purification Low Temperature Take-off Station	
Number per Cascade Hall	2
Available, On-line	1
Spare (Standby, Prep, Maintenance)	1
Cylinder Type	48Y
Capacity UF_6, kg (lb)	12,501 (27,565)
Cooling	
Medium	Air, via dedicated chiller
Temperature, °C (°F)	-25 (-13)
Weighing System	
Type	Load Cell
Capacity, kg (lb)	16,000 (35,300)

Feed Purification UF_6 Cold Trap	
Number per Cascade Hall	2
Available, On-line	1
Spare (Standby, Prep, Maintenance)	1
Capacity, kg (lb) UF_6	50 (110)
Cool Down / Desubliming	
Operating Temperature, °C (°F)	-60 (-76)
Heat Up / Subliming	
Operating Temperature, °C (°F)	20 (68)
Weighing System	
Type	Load Cell
Capacity, kg (lb)	To be determined at final design.
Feed Purification Vacuum Pump/Chemical Trap Set	
Number per Cascade Hall	2
Available, On-line	1

Spare (Standby, Prep, Maintenance)		1		
Vacuum Pump				
Capacity, m^3/hr (cfm)		55 (32.5)40 (176)		
Chemical Traps (Note 1)				
Type	Chemical	Chemical	Adsorption	Mechanical Separation
Function	UF_6 Removal	HF Removal	Oil Removal	Oil Removal
Count	One	Two	One (pump inlet)	One (pump outlet)
Media	Activated Carbon	Aluminum Oxide (Al_2O_3)	Al_2O_3	Mechanical

Note 1: Each Vacuum Pump/Chemical Trap Set has the above chemical traps.

Hot Boxes, Pipe Heat Tracing	
Media	Electric
Temperature, °C (°F)	56 to 64 (133 to 147)

Nitrogen Purge	
Operating Pressure, mbar (psia)	<1,000 (14.5)
Gas Usage	Intermittent flow in small quantities.

Mobile Feed Sampling Rig			
Number Per Cascade Hall		1	
Vacuum Pump			
Capacity, m^3/hr (cfm)		55 (32.5)	
Chemical Traps			
Type	Chemical	Adsorption	Mechanical Separation
Function	UF_6 and HF Removal	Oil Removal	Oil Removal
Count	One	One (pump inlet)	One (pump outlet)
Media	Mixed-bed with activated carbon and aluminum oxide (Al_2O_3)	(Al_2O_3)	Mechanical

Helium Leak Test Cart			
Number Per Cascade Hall		1	
Vacuum Pump			
Capacity, m^3/hr (cfm)		25 (14.7)	
Chemical Traps			
Type		Adsorption	Mechanical Separation
Function		Oil Removal	Oil Removal
Count		One (pump inlet)	One (pump outlet)
Media		(Al_2O_3)	Mechanical
Mobile Pressure Transducer Calibration Rig			
Number Per SBM		1	
Vacuum Pumps			
Capacity, m^3/hr (cfm)		7.3 (4.3) rotary vane pump	
Capacity, m^3/hr (cfm)		14.6 (8.6) rotary vane pump	
Capacity, m^3/hr (cfm)		126 (74.2 turbo pump	
Chemical Traps			
Type	Chemical	Adsorption	Mechanical Separation
Function	UF6 and HF Removal	Oil Removal	Oil Removal
Count	One	Two (each rotary pump inlet)	Two (each rotary pump outlet)
Media	Mixed-bed with activated carbon and aluminum oxide (Al_2O_3)	(Al_2O_3)	Mechanical

Table 3.4-2 UF_6 Feed System Codes and Standards

The equipment IROFS are designed, constructed, tested, and maintained to QA Level 1. IROFS design criteria are included in Section 3.8.1, IROFS.
Rotating equipment is designed in accordance with the appropriate industry codes and standards. There is no QA Level 1 rotating equipment in the UF_6 Feed System.
Heat transfer equipment is designed in accordance with the appropriate industry codes and standards. There is no QA Level 1 heat transfer equipment in the UF_6 Feed System.
Material handling equipment is designed in accordance with the appropriate industry codes and standards and the requirements of the Occupational Safety and Health Administration. There is no QA Level 1 material handling equipment in the UF_6 Feed System.
All miscellaneous equipment is designed in accordance with the appropriate industry codes and standards. There is no QA Level 1 miscellaneous equipment in the UF_6 Feed System.
All process piping in the UF_6 Feed System shall meet or exceed the requirements of the American Society of Mechanical Engineers, Process Piping, ASME B31.3.
All 48-in cylinders used in the UF_6 Feed System comply with the requirements of ANSI N14.1, Uranium Hexafluoride Packaging for Transport.

Edition of Codes, Standards, NRC Documents, etc are listed in Table 3.0-1.

Table 3.4-3 Cascade System Codes and Standards

The Centrifuge Machine Passive Isolation Devices is designed, constructed, tested, and maintained to QA Level 1.
Rotating equipment is designed in accordance with the appropriate industry codes and standards.
Heat transfer equipment is designed in accordance with the appropriate industry codes and standards.
All miscellaneous equipment is designed in accordance with the appropriate industry codes and standards.
All process piping in the Cascade System shall meet or exceed the requirements of American Society of Mechanical Engineers, Process Piping, ASME B31.3.
The design of electrical systems and components in the Cascade System is in conformance with the requirements of the National Electrical Safety Code, IEEE C2 and the New Mexico Electric Code (based on the National Electric Code, NFPA 70), and appropriate industry codes and standards.

Table 3.4-4 Product Take-off System Design Basis

Equipment Requirements			
Component	**Quantity Per**		
	Cascade Hall	**Separations Building Module**	**Plant Total**
Product Pumping Trains	3	6	18
Product Pumps (2 Pumps in series per Train)	6	12	36
Product Low Temperature Take-off Stations	5	10	30
UF_6 cold traps	2	4	12
Vacuum Pump/Chemical Trap Sets	2	4	12

Flow – kg/hr (lb/hr)	**Per Cascade Hall**
Maximum	27.5 (60.6)

First Pump, Product Pumping Train	
Nominal Pump Capacity, m^3/hr (cfm)	1,200 (706)
Inlet Pressure, mbar (in. H_2O)	2 (0.803)

Second Pump, Product Pumping Train	
Nominal Pump Capacity, m^3/hr (cfm)	304 (179)
Maximum Outlet Pressure, mbar (in. H_2O)	80 (32.1)

Product Low Temperature Take-off Station	
Number Per Cascade Hall	5
On-line	2
Standby	2
Preparation/Maintenance	1
Cylinder Type	30B
Capacity UF_6, kg (lb)	2,277 (5,021)
Cooling	
Medium	Air, via dedicated chiller
Media Temperature, °C (°F)	-25 (-13)

Weighing System	
Type	Load Cell
Capacity, kg (lb)	16,000 (35,300)

Product Vent UF_6 Cold Trap	
Number Per Cascade Hall	2
Available, On-line	1
Spare (Standby, Prep, Maintenance)	1
Capacity, kg (lb) UF_6	25 (55.1)
Cool Down / Desubliming	
Operating Temperature, °C (°F)	-60 (-76)
Heat Up / Subliming	
Operating Temperature, °C (°F)	20 (68)
Weighing System	
Type	Load Cell
Capacity, kg (lb)	To be determined at final design.

Product Vent Vacuum Pump/Chemical Trap Set				
Number Per Cascade Hall			2	
Available, On-line			1	
Spare (Standby, Prep, Maintenance)			1	
Vacuum Pump				
Capacity, m^3/hr (cfm)			55 (32.5)	
Chemical Traps (Note 1)				
Type	Chemical	Chemical	Adsorption	Mechanical Separation
Function	UF_6 Removal	HF Removal	Oil Removal	Oil Removal
Count	One	One	One (pump inlet)	One (pump outlet)
Media	Activated Carbon	Aluminum Oxide (Al_2O_3)	Al_2O_3	Mechanical

Note 1: Each Vacuum Pump/Chemical Trap Set has the above chemical traps.

Nitrogen Purge	
Operating Pressure, mbar (psia)	<1,000 (14.5)
Gas Usage	Intermittent flow in small quantities.

Assay Sampling Pump/Chemical Trap Set			
Number Per Cascade Hall		1	
Vacuum Pump			
Capacity, m^3/hr (cfm)		55 (32.5)	
Chemical Traps			
Type	Chemical	Adsorption	Mechanical Separation
Function	UF_6 and HF Removal	Oil Removal	Oil Removal
Count	One	One (pump inlet)	One (pump outlet)
Media	Mixed-bed activated carbon and aluminum oxide (AL_2O_3)	Al_2O_3	Mechanical

Mobile Maintenance Rig				
Number Per SBM		1 (minimum)		
Vacuum Pump				
Capacity, m^3/hr (cfm)		55 (32.5) for rotary vane pump		
Capacity, m^3/hr (cfm)		304 (179) for roots vacuum pump		
Cold Trap				
Type		K300		
Capacity, kg (lb) UF_6		30 (66.1) maximum		
Chemical Traps (Note 1)				
Type		Chemical	Adsorption	Mechanical Separation
Function		UF_6 and HF Removal	Oil Removal	Oil Removal
Count		One	One (pump inlet)	One (pump outlet)
Media		Mixed-bed activated carbon and aluminum oxide (Al_2O_3)	Al_2O_3	Mechanical

Note 1:	Each Mobile Maintenance Rig has the above chemical traps.

Table 3.4-5 Product Take-off System Codes and Standards

The equipment IROFS are designed, constructed, tested, and maintained to QA Level 1. IROFS design criteria are included in Section 3.8.1, IROFS.
Rotating equipment is designed in accordance with the appropriate industry codes and standards. There is no QA Level 1 rotating equipment in the Product Take-off System.
Heat transfer equipment is designed in accordance with the appropriate industry codes and standards. There is no QA Level 1 heat transfer equipment in the Product Take-off System.
Material handling equipment is designed in accordance with the appropriate industry codes and standards and the requirements of the Occupational Safety and Health Administration. There is no QA Level 1 material handling equipment in the Product Take-off System.
All miscellaneous equipment is designed in accordance with the appropriate industry codes and standards. There is no QA Level 1 miscellaneous equipment in the Product Take-off System.
All process piping in the Product Take-off System shall meet or exceed the requirements of American Society of Mechanical Engineers, Process Piping, ASME B31.3.
All 30-in cylinders used in the Product Take-off System comply with the requirements of ANSI N14.1, Uranium Hexafluoride Packaging for Transport.

Editions of Codes, Standards, NRC Documents, etc are listed in Table 3.0-1

Table 3.4-6 Tails Take-off System Design Basis

Equipment Requirements			
Component	**Quantity Per**		
	Cascade Hall	**Separations Building Module**	**Plant Total**
Tails Pumping Trains	16	32	96
Tails Pumps (Two Pumps in series per Train)	32	64	192
Tails Low Temperature Take-off Stations	11	22	66
Tails Evacuation Pump/Chemical Trap Sets	1	2	6

Flow – kg/hr (lb/hr)	**Per Cascade Hall**
Maximum	152 (335)
Dump Peak	256 (564)

First Pump, Tails Pumping Train	
Nominal Pump Capacity, m^3/hr (cfm)	1,200 (706)
Inlet Pressure, mbar (in. H_2O)	2 (0.80)

Second Pump, Tails Pumping Train	
Nominal Pump Capacity, m^3/hr (cfm)	304 (179)
Maximum Outlet Pressure, mbar (in. H_2O)	55 (22.1)

Tails Low Temperature Take-off Station	
Number Per Cascade Hall	11 (Note 1)
On-line	7
Standby/Preparation/Maintenance	1
Cylinder Type	48Y
Capacity UF_6, kg (lb)	12,501 (27,565)
Cooling	
Medium	Air, via dedicated chiller
Media Temperature, °C (°F)	-25 (-13)
Weighing System	
Type	Load Cell
Capacity, kg (lb)	16,000 (35,300)
Note 1: Eight of the eleven Tails Low Temperature Take-off Stations support the current SWU capacity and three additional stations support the planned SBM expansion and operational flexibility.	

Tails Evacuation Pump/Chemical Trap Set				
Number Per Cascade Hall			1	
Vacuum Pump				
Capacity, m^3/hr (cfm)			55 (32.5)	
Chemical Traps				
Type	Chemical		Adsorption	Mechanical Separation
Function	UF_6 and HF Removal		Oil Removal	Oil Removal
Count	One		One (pump inlet)	One (pump outlet)
Media	Mixed Bed (Activated Carbon and Aluminum Oxide (Al_2O_3))		Al_2O_3	Mechanical

Table 3.4-7 Tails Take-off System Codes and Standards

The equipment IROFS are designed, constructed, tested, and maintained to QA Level 1. IROFS design criteria are included in Section 3.8.1, IROFS.
Rotating equipment is designed in accordance with the appropriate industry codes and standards. There is no QA Level 1 rotating equipment in the Tails Take-off System.
Heat transfer equipment is designed in accordance with the appropriate industry codes and standards. There is no QA Level 1 heat transfer equipment in the Tails Take-off System.
Material handling equipment is designed in accordance with the appropriate industry codes and standards and the requirements of the Occupational Safety and Health Administration. There is no QA Level 1 material handling equipment in the Tails Take-off System.
All miscellaneous equipment is designed in accordance with the appropriate industry codes and standards. There is no QA Level 1 miscellaneous equipment in the Tails Take-off System.
All process piping in the Tails Take-off System shall meet or exceed the requirements of American Society of Mechanical Engineers, Process Piping, ASME B31.3.
All 48-in cylinders used in the Tails Take-off System comply with the requirements of ANSI N14.1, Uranium Hexafluoride Packaging for Transport.

Edition of Codes, Standards, NRC Documents, etc are listed in Table 3.0-1.

Table 3.4-8 Product Blending System Design Basis

Equipment Requirements		
Component		**Number Required (Plant Total)**
Blending Donor Stations and Associated Valve Hot Boxes		2
Blending Receiver Stations and Associated Valve Hot Boxes		2
Blending and Sampling Vent Subsystem UF_6 cold traps		1
Blending and Sampling Vent Subsystem Pump/Chemical Trap Sets		1
Blending Donor Stations		
Number per Plant (Total)	2	
On-line	1 or 2	
Standby, Preparation, Maintenance	1 or 2	
Heating Requirements	Air, via dedicated heater	
Cylinder Type	30B	
Capacity UF_6, kg (lb)	2,277 (5,021)	
Temperature, °C (°F)	61 (142)	
Weighing System		
Type	Load Cell	
Capacity, kg (lb)	4,000 (8,820)	
Blending Receiver Stations		
Number per Plant (Total)	2	
On-line	1 or 2	
Standby, Preparation, Maintenance	1 or 2	
Cylinder Type	30B	
Capacity UF_6, kg (lb)	2,277 (5,021)	
Cooling		
Medium	Air, via dedicated chiller	
Temperature, °C (°F)	-25 (-13)	
Weighing System		
Type	Load Cell	
Capacity, kg (lb)	4,000 (8,820)	
Donor and Receiver Station Valve Hot Boxes		
Heating Media	Donor	Receiver
Media	Electrical Trace	Electrical Trace
Temperature, °C (°F)	60 (140)	60 (140)

Blending and Sampling Vent UF_6 Cold Trap	
Number per Plant (Total)	1
Capacity, kg (lb) UF_6	25 (55.1)
Cool Down/Desubliming	
Operating Temperature, °C (°F)	-60 (-76)
Heat Up/Subliming	
Operating Temperature, °C (°F)	20 (68)
Weighing System	
Type	Load Cell
Capacity, kg (lb)	To be determined in final design.

Blending and Sampling Vent Vacuum Pump/Chemical Trap Set				
Number per Plant (Total)		1		
Vacuum Pump				
Nominal Capacity, m^3/hr (cfm)		55 (32.5)		
Chemical Traps				
Type	Chemical	Chemical	Adsorption	Mechanical Separation
Function	UF_6 Removal	HF Removal	Oil Removal	Oil Removal
Count	One	One	One	One (pump outlet)
Media	Activated Carbon	Aluminum Oxide (Al_2O_3)	Al_2O_3	Mechanical

Nitrogen Purge	
Operating Pressure, mbar (psia)	<1,000 (14.5)
Gas Usage	Intermittent flow in small quantities.

Table 3.4-9 Product Blending System Codes and Standards

The equipment IROFS are designed, constructed, tested, and maintained to QA Level 1. IROFS design criteria are included in Section 3.8.1, IROFS.
Rotating equipment is designed in accordance with the appropriate industry codes and standards. There is no QA Level 1 rotating equipment in the Product Blending System.
Heat transfer equipment is designed in accordance with the appropriate industry codes and standards. There is no QA Level 1 heat transfer equipment in the Product Blending System.
Material handling equipment is designed in accordance with the appropriate industry codes and standards and the requirements of the Occupational Safety and Health Administration. There is no QA Level 1 material handling equipment in the Product Blending System.
All miscellaneous equipment is designed in accordance with the appropriate industry codes and standards. There is no QA Level 1 miscellaneous equipment in the Product Blending System.
All process piping in the Product Blending System shall meet or exceed the requirements of American Society of Mechanical Engineers, Process Piping, ASME B31.3.
All 30-in cylinders used in the Product Blending System comply with the requirements of ANSI N14.1, Uranium Hexafluoride Packaging for Transport.

Edition of Codes, Standards, NRC Documents, etc are listed in Table 3.0-1.

Table 3.4-10 Product Liquid Sampling System Design Basis

Equipment Requirements	
Component	**Number Required (Total Plant)**
Product Liquid Sampling Systems	1
Product Liquid Sampling Autoclaves	3

Capacity Requirements	
Product Cylinders	Equivalent 9 / week

Product Liquid Sampling Autoclaves	
Design Pressure, bar absolute (psia)	12 (174) and Full Vacuum
Design Temperature, °C (°F)	160 (320) (Pressure Vessel) 120 (248) (Seals, Instruments)
Autoclave Cooling Water, °C (°F)	6 (42.8)

Product Cylinder	
Cylinder Type	30B
Capacity UF_6, kg (lb)	2,277 (5,021)

Product Sampling Manifold	
Sample Bottle Type	1S
Maximum Net Weight per bottle, kg (lb) UF_6	0.45 (0.99)
Minimum Volume per bottle, L (gal)	0.15 (0.04)

Table 3.4-11 Product Liquid Sampling System Codes and Standards

The equipment IROFS are designed, constructed, tested, and maintained to QA Level 1. IROFS design criteria are included in Section 3.8.1, IROFS.
Product Liquid Sampling Autoclaves and their supports are designed to meet the requirements of the American Society of Mechanical Engineers (ASME), Boiler and Pressure Vessel Code, Section VIII, Division I, current edition at the time of detail design.
Rotating equipment is designed in accordance with the appropriate industry codes and standards. There is no QA Level 1 rotating equipment in the Product Liquid Sampling System.
Heat transfer equipment is designed in accordance with the appropriate industry codes and standards. There is no QA Level 1 heat transfer equipment in the Product Liquid Sampling System.
Material handling equipment is designed in accordance with the appropriate industry codes and standards and the requirements of the Occupational Safety and Health Administration. There is no QA Level 1 material handling equipment in the Product Liquid Sampling System.
All miscellaneous equipment is designed in accordance with the appropriate industry codes and standards. There is no QA Level 1 miscellaneous equipment in the Product Liquid Sampling System.
All process piping in the Product Liquid Sampling System shall meet or exceed the requirements of American Society of Mechanical Engineers, Process Piping, ASME B31.3, current edition at the time of detail design.
All 1.5-in and 30-in cylinders used in the Product Liquid Sampling System comply with the requirements of ANSI N14.1, Uranium Hexafluoride Packaging for Transport, version in effect at the time of cylinder manufacture.

Table 3.4-12 Contingency Dump System Design Basis

Equipment Requirements			
Components	**Quantity per**		
	Cascade Hall	**Plant Module**	**Plant Total**
Sodium Fluoride Trap	24	48	144
Buffer Volume	8	16	48
Vacuum Pump/ Chemical Trap Set	8	16	48

System Capacity	**Per Cascade Hall**
Peak Dump Flow, kg/hr (lb/hr)	38.1 (84.0)
Dump Capacity, kg (lb)	15 (33.1)
Dump Time, hr	18

Chemical Trap	
Type	Sodium Fluoride Trap
Capacity UF_6, kg (lb)	100 (221)

Contingency Dump Vacuum Pump/Chemical Trap Set				
Vacuum Pumps				
Capacity, m^3/hr (cfm)		55 (32.5) for rotary vane pump		
Capacity, m^3/hr (cfm)		304 (179) for roots vacuum pump		
Chemical Traps				
Type	Chemical		Adsorption	Mechanical Separation
Function	UF_6 and HF Removal		Oil Removal	Oil Removal
Count	One		One (pump inlet)	One (pump outlet)
Media	Mixed Bed (Activated Carbon and Aluminum Oxide (Al_2O_3))		Al_2O_3	Mechanical

Piping Headers	
Buffer Volume	
Volume, m^3 (ft^3)	1 (35.3)
Operating Pressure, mbar (in. H_2O)	Classified
Temperature, °C (°F)	Ambient
Primary Header	
Operating Pressure, mbar (in. H_2O)	Classified
Temperature, °C (°F)	Ambient
Secondary Header	
Operating Pressure, mbar (in. H_2O)	Classified
Temperature, °C (°F)	Ambient

Table 3.4-13 Contingency Dump System Codes and Standards

The equipment IROFS are designed, constructed, tested, and maintained to QA Level 1. IROFS design criteria are included in Section 3.8.1, IROFS.
Rotating equipment is designed in accordance with the appropriate industry codes and standards. There is no QA Level 1 rotating equipment in the Contingency Dump System.
Heat transfer equipment is designed in accordance with the appropriate industry codes and standards. There is no QA Level 1 heat transfer equipment in the Contingency Dump System.
All miscellaneous equipment is designed in accordance with the appropriate industry codes and standards. There is no QA Level 1 miscellaneous equipment in the Contingency Dump System.
All process piping in the Contingency Dump System meets or exceeds the requirements of American Society of Mechanical Engineers, Process Piping, ASME B31.3.

Edition of Codes, Standards, NRC Documents, etc are listed in Table 3.0-1.

Table 3.4-14 Gaseous Effluent Vent System Codes and Standards

Equipment Type	Code or Standard
Air Handling Units	**NFPA 90A** **AMCA Pub. 99** **AMCA Pub. 261** **ARI 430** **NEMA MG 1**
Fans/Motors	**AMCA 210** **ASHRAE 51** **ASHRAE Systems and Equipment** **NEMA MG1**
Coils	**ANSI/ARI 410**
Air Cleaning Devices	**ASME AG-1** **ERDA 76-21** **ANSI/ASME N509** **ANSI/ASME N510** **ASTM D6646 (see Note 1)** **ANSI/AWS-D1.1 (for Pumped Extract GEVS)** **ANSI/AWS-D1.3 (for Pumped Extract GEVS)** **ANSI/AWS-D9.1 (for CRDB GEVS)**

Edition of Codes, Standards, NRC Documents, etc are listed in Table 3.0-1.

Note 1. Qualification testing, to verify HF removal efficiency, of the impregnated carbon will be performed using ASTM D6646, modified to reflect removal of HF instead of hydrogen sulfide or using an actual in situ test such as described in document ETC4044158 (Qualification of Safe by Shape GEVS Filters).

Table 3.4-15 Pumped Extract Design Bases

Equipment Requirements (Pumped Extract GEVS consist of two redundant dan-filter trains)	
Item	Quantity
Fan/Filter Trains (each train consist of 8 banks or legs of filters; each bank contains 1 pre-filter, 1 HEPA, 1 activated carbon filter, 1 filter housing for an optional filter, and a final HEPA)	2 filter trains
Fans	1 fan per filter train
System Design Flow Rate	646 m^3/hr (380 cfm)
Filter Specifications	
Prefilter (Dust removal)	60-65%
HEPA Filter (Removal of uranium aerosols, mainly UO_2F_2 particles)	99.97% (for ≥ 0.3 μm particle size)
Impregnated Activated Carbon Filter (HF removal)	99%

Table 3.4-16 CRDB GEVS Design Bases

Equipment Requirements	
Item	Quantity
Filter Stations (prefilter, HEPA, activated carbon filter)	1 (no spare)
Fans	1 (no spare)
System Design Flow Rate	18,700 m^3/hr (11,000 cfm)
Filter Specifications	
Prefilter (Dust removal)	85%
HEPA Filter (Removal of uranium aerosols, mainly UO_2F_2 particles)	99.97% (for ≥ 0.3 μm particle size)
Impregnated Activated Carbon Filter (HF removal)	99%

Table 3.4-17 Functional Requirements for Centrifuge Test and Post Mortem Facilities

Item		Requirement
Temperature		18-25°C (65 – 77°F)
Relative Humidity		55% max.
Pressure		Negative pressure to prevent egress of airborne contaminated materials during contaminated or potentially contaminated processes.
Floor		To DIN 18202 (Tolerazen fur Hochbau, Tabelle 3, Zeile 4, flatness 3 mm/m). Sealed floor to assist cleaning to minimize surface contamination
Handling		Floor based transport vehicle, jib crane.
Physical Security		Access control for cleared personnel only.
Personnel Facilities (common to both facilities).		Toilets, wash basins, shower, and change area.
Radiological Protection		Alpha in air monitors, HFC (hand foot clothing) monitor.

Table 3.4-18 Utility Requirements for Centrifuge Test and Post Mortem Facilities

Utilities	Requirement	
Electrical	440 VAC, 110 VAC, and 24VDC for instruments	
Liquid Nitrogen	Required	
Nitrogen Gas	Required	
Compressed Air	Required	
HVAC	Required	
Centrifuge Test and Post Mortem Facilities Exhaust Filtration System	Three separate flexible exhaust hoses are required. One is located adjacent to the feed and take-off vessels to allow removal and recharging with UF_6. The remaining two are located at the top of each Centrifuge Cubicle, to provide local extract when breaking process connections. The exhaust of the rotary vane vacuum pump discharges into the Centrifuge Test and Post Mortem Facilities Exhaust Filtration System.	
Cooling Water	Proprietary stand-alone unit.	

Table 3.4-19 UF_6 Feed Cylinder Delivery and Storage Requirements

Feed Cylinders	
Code	ANSI-N14.1
Type (Typical)	48Y
Net UF_6 Capacity	12,501 kg (27,560 lbs)
Average Rate (Cylinders/Yr)	690
Handling	
Unloading	20 Metric Ton Bridge Crane
Transfer	Rail Transport
Storage	
No. Cylinders (~ one-third of a Year Supply)	210
Area/Cylinder	~8 m^2 (86 ft^2)
Stacking	No
Indoor/Outdoor	Indoor
Temperature	Ambient
Accountability Weighing System	
Type	Weigh Scale
Capacity	20,000 kg (44,092 lbs)
Accuracy	±2.5 kg (±5.5 lb)

Table 3.4-20 Crane Movement Requirements

Cylinder Receipt and Dispatch Building	
Type	20 Metric Ton Bridge Crane
Quantity	3
Movements: (cylinders/yr) Feed Cylinders In Product Cylinders Out UBC Out Empty Product In Empty UBC In Empty Feed Out	 690 350 625 350 065
Total Crane Movements (Cylinders/Yr)	2080
UBC Storage Pad	
Type	20 Metric Ton Single Girder Mobile Gantry Crane
Quantity	2
Movements: (cylinders/yr) UBC In Empty Feed Cylinders In Empty Feed Out Feed In Feed Out Empty Product Cylinders In Empty Product Out	 625 6565 690 690 350 350
Total Crane Movements (Cylinders/Yr)	2835

Table 3.4-21 UBC Storage System Requirements	
Cylinders	
Code	ANSI-N14.1
Type (Typical)	48Y
Net UF_6 Capacity	12,501 kg (27,560 lbs)
Rate (Cylinders/Yr)	625 maximum at full production
Storage	
No. Cylinders	15,727
Area/Cylinder	5.40 m^2 (58 ft^2)
Stacking	Yes (on cradles)
Indoor/Outdoor	Outdoor
Temperature	Ambient

Table 3.4-22 Cascade System			
Mobile Cascade Evacuation Rigs (Note 1)			
Number Per SBM		3	
Vacuum Pumps			
Capacity, m^3/hr (cfm)		90 (53) for rotary vane pump	
Capacity, m^3/hr (cfm)		304 (179) for roots vacuum pump	
Chemical Traps			
Type	Chemical	Adsorption	Mechanical Separation
Function	UF_6 and HF Removal	Oil Removal	Oil Removal
Count	One	One (pump inlet)	One (pump outlet)
Media	Mixed-bed with activated carbon and aluminum oxide (Al_2O_3)	(Al_2O_3)	Mechanical

Note 1 – One Mobile Cascade Evacuation Rig is designated as Clean for use on radiologically clean systems.

Mobile Cascade Sampling Rig			
Number Per Cascade Hall		1	
Vacuum Pump			
Capacity, m^3/hr (cfm)		55 (32.5) for rotary vane pump	
Capacity, m^3/hr (cfm)		304 (179) for roots vacuum pump	
Chemical Traps			
Type	Chemical	Adsorption	Mechanical Separation
Function	UF_6 Removal	Oil Removal	Oil Removal
Count	One	One (pump inlet)	One (pump outlet)
Media	Activated Carbon	(Al_2O_3)	Mechanical

3.4.14 Section 3.4 Figures

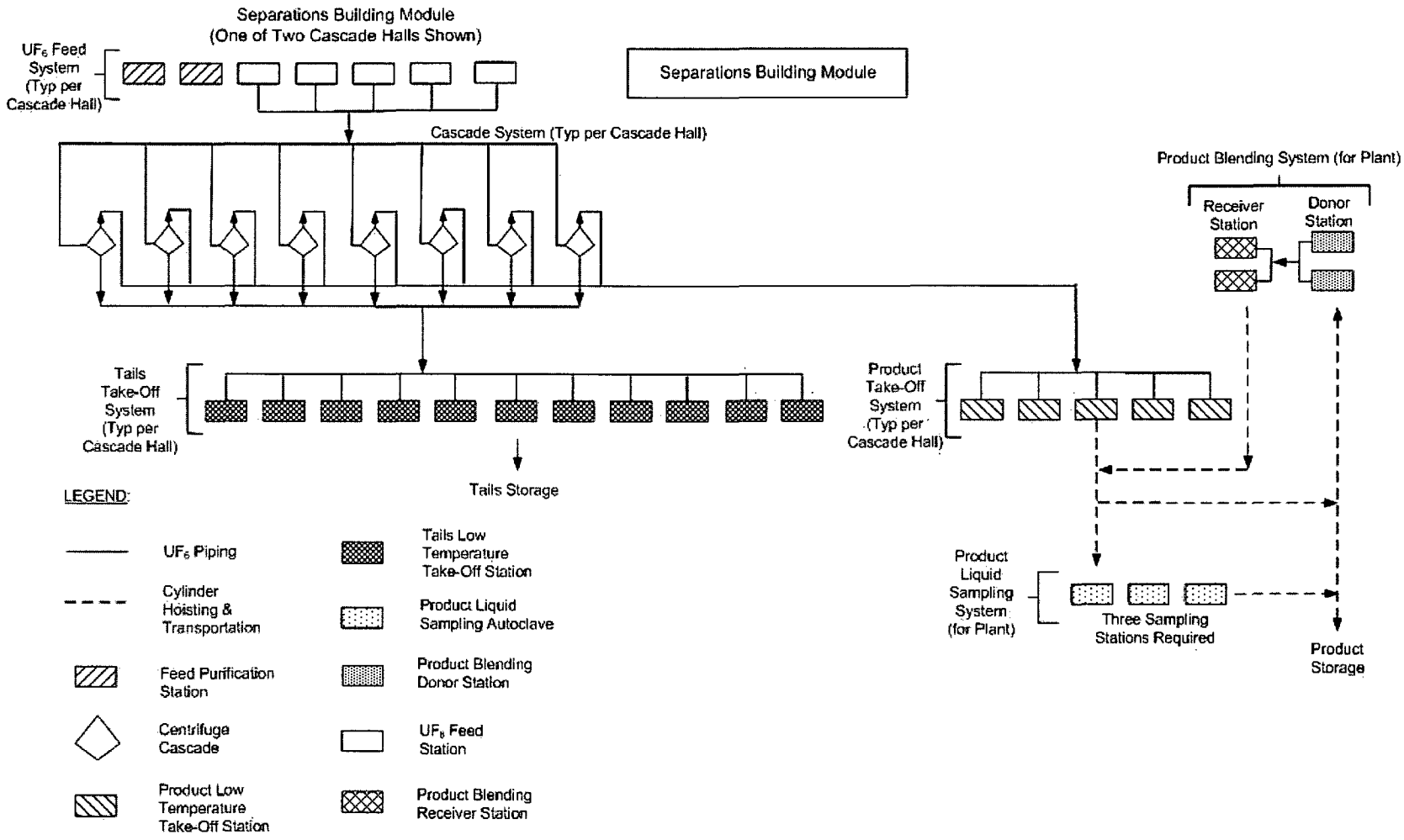

Figure 3.4-1 Pictorial Representation of the Enrichment Process

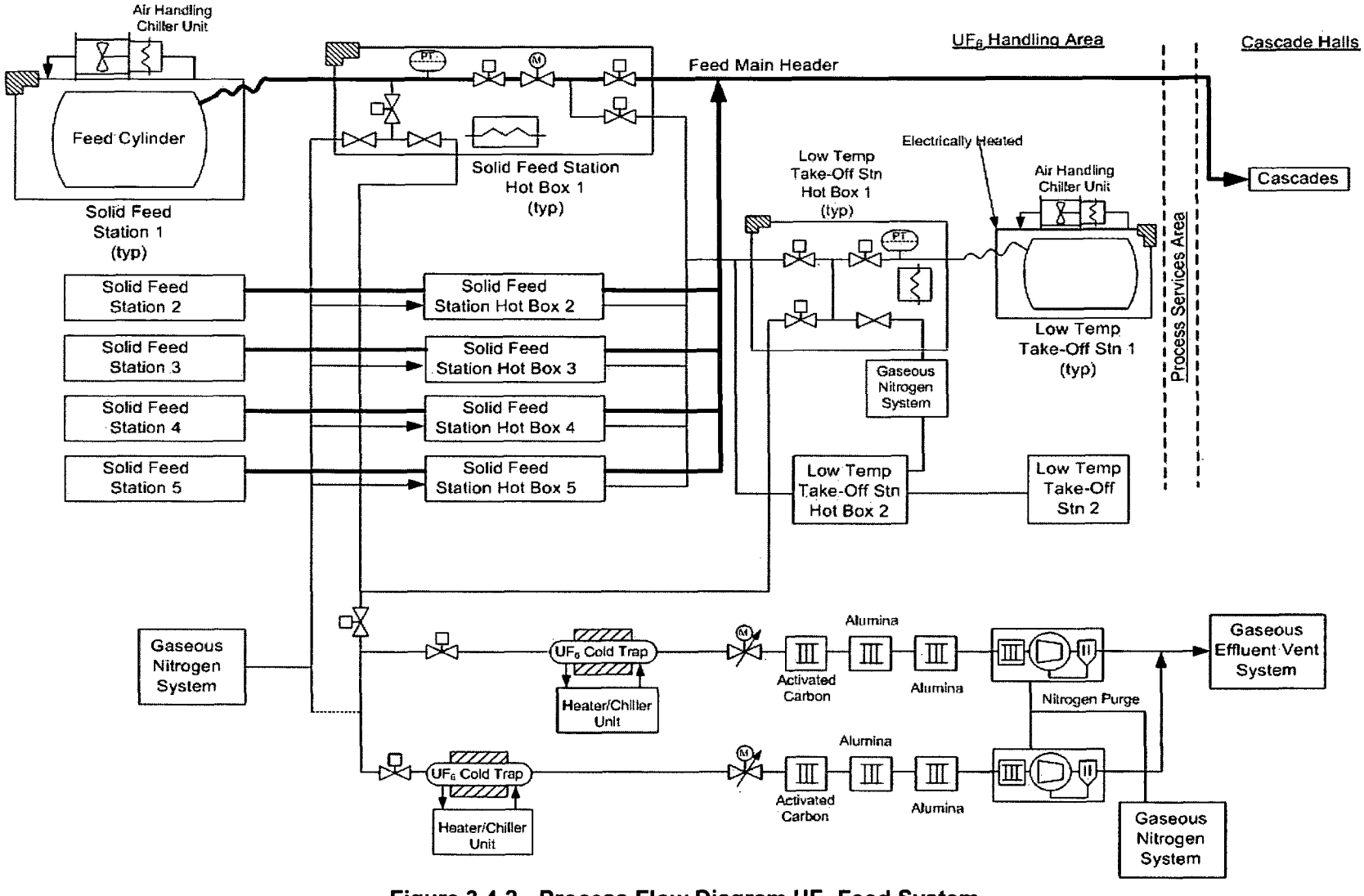

Figure 3.4-2 Process Flow Diagram UF_6 Feed System

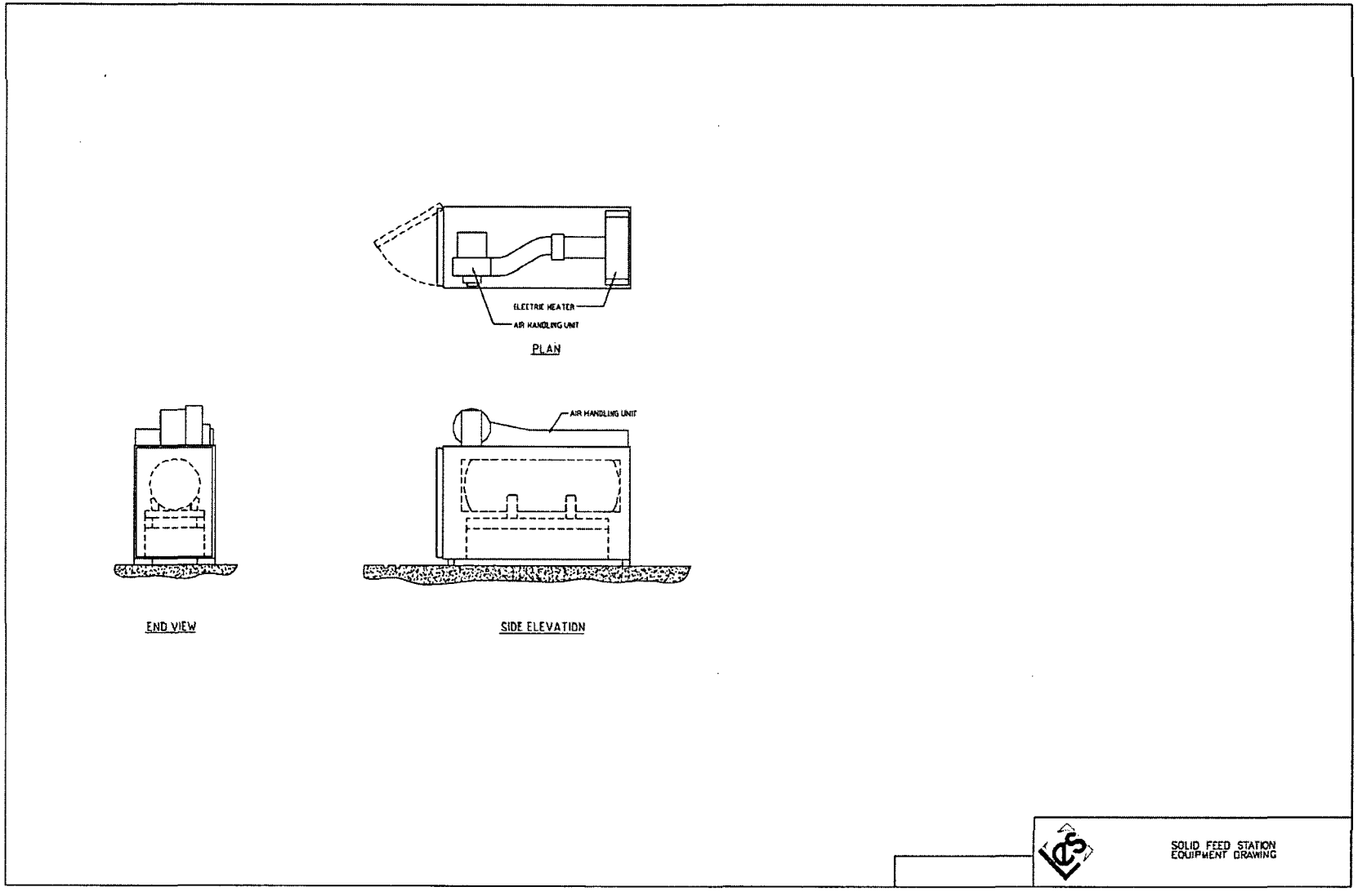

Figure 3.4-3 Solid Feed Station Equipment Drawing

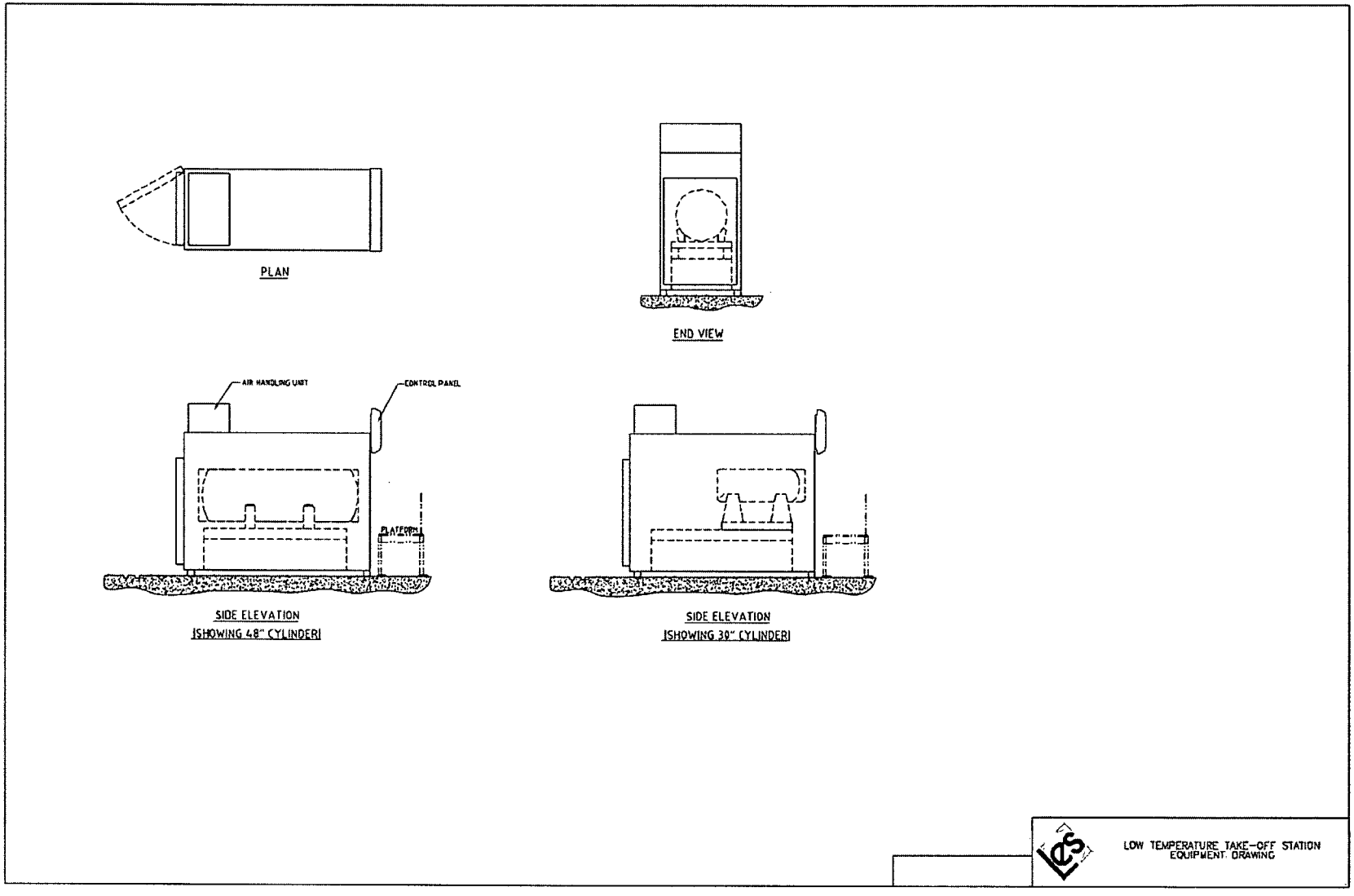

Figure 3.4-4 Low Temperature Take-off Station Equipment Drawing

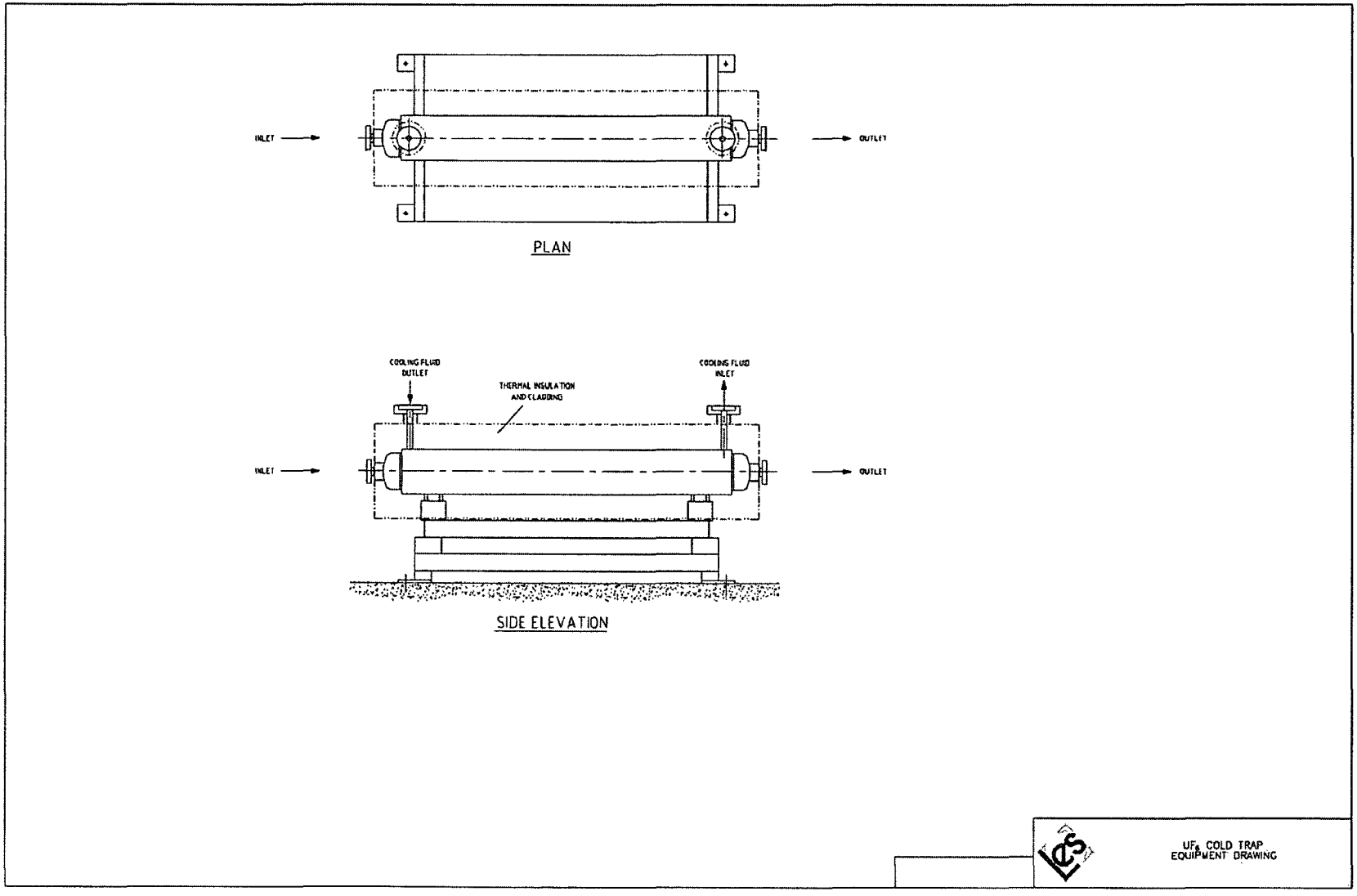

Figure 3.4-5 UF_6 Cold Trap Equipment Drawing

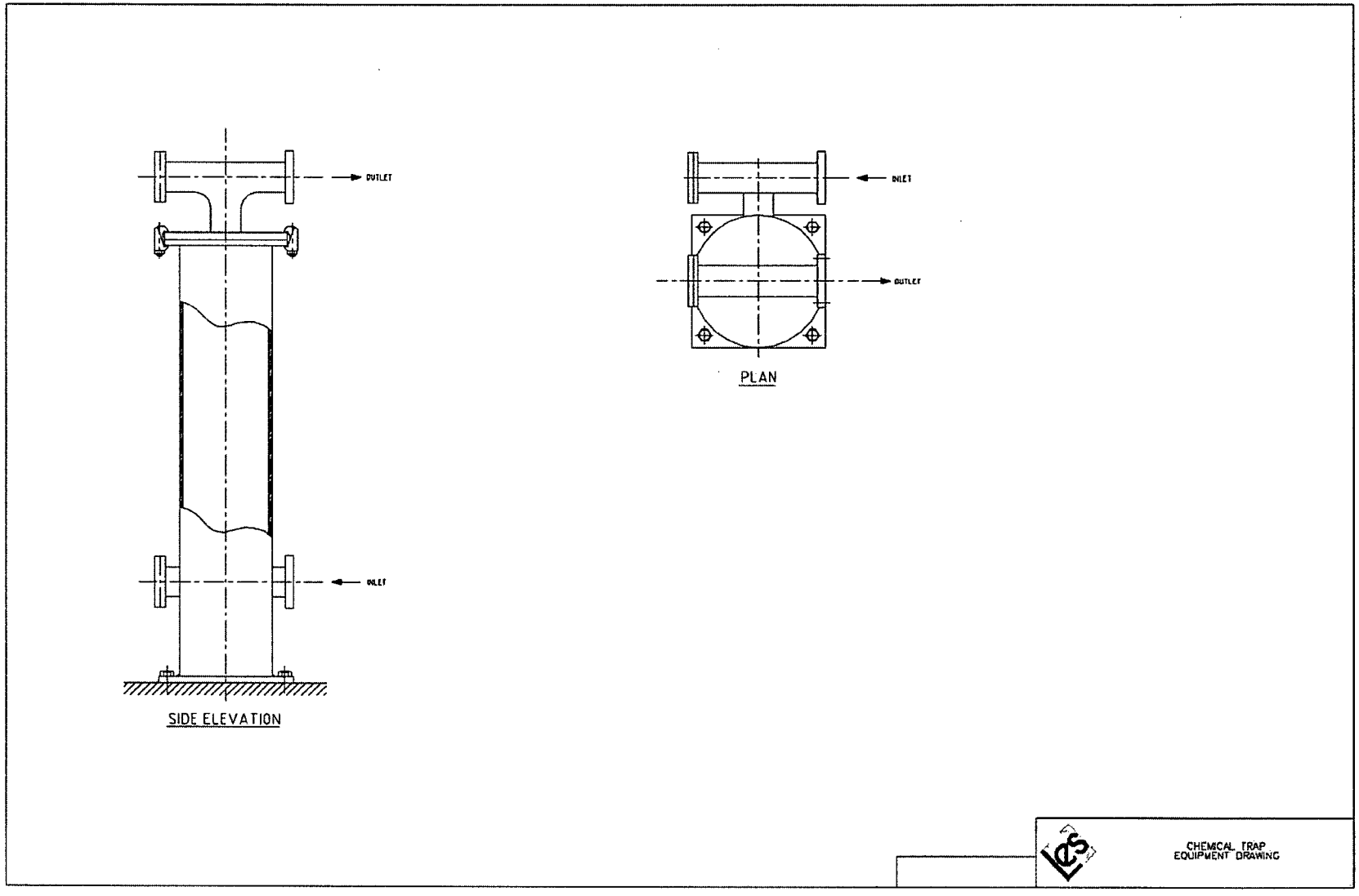

Figure 3.4-6 Chemical Trap Equipment Drawing

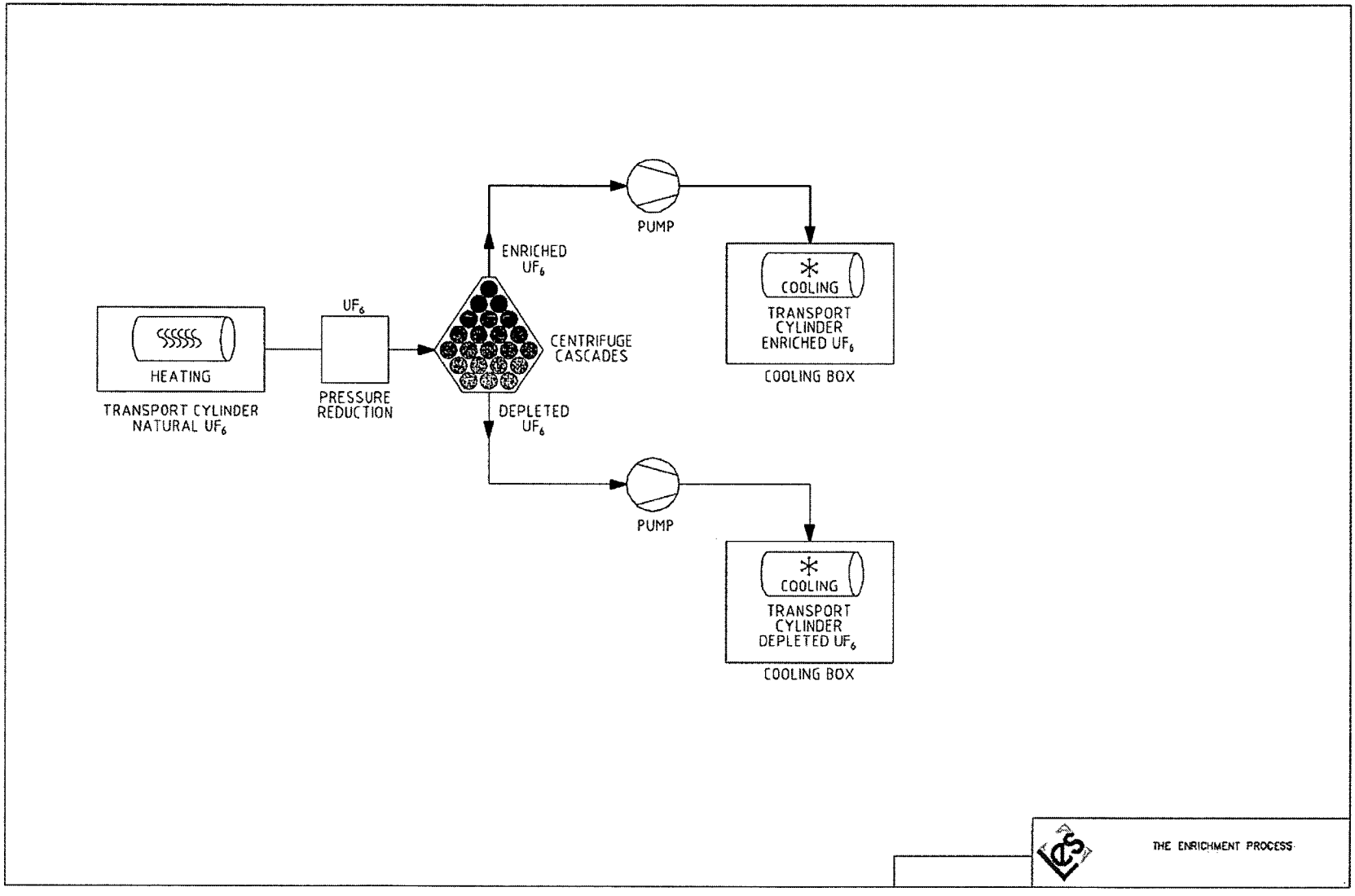

Figure 3.4-7 The Enrichment Process

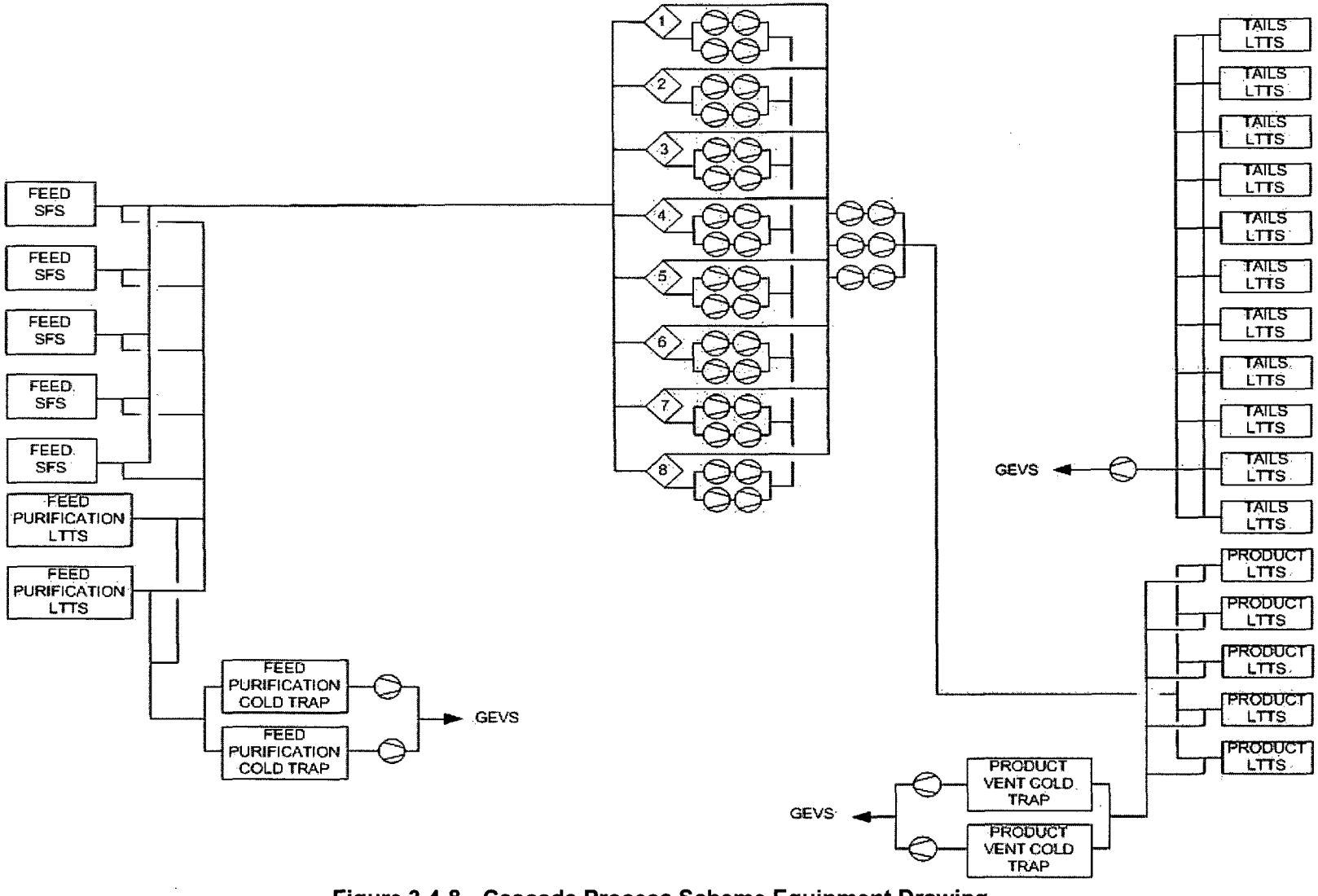

Figure 3.4-8 Cascade Process Scheme Equipment Drawing

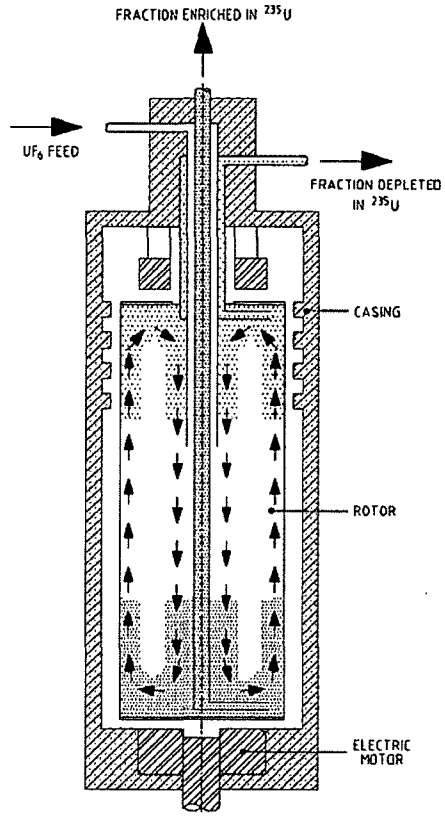

PRINCIPLE OF A GAS CENTRIFUGE

Figure 3.4-9 Principle of a Gas Centrifuge

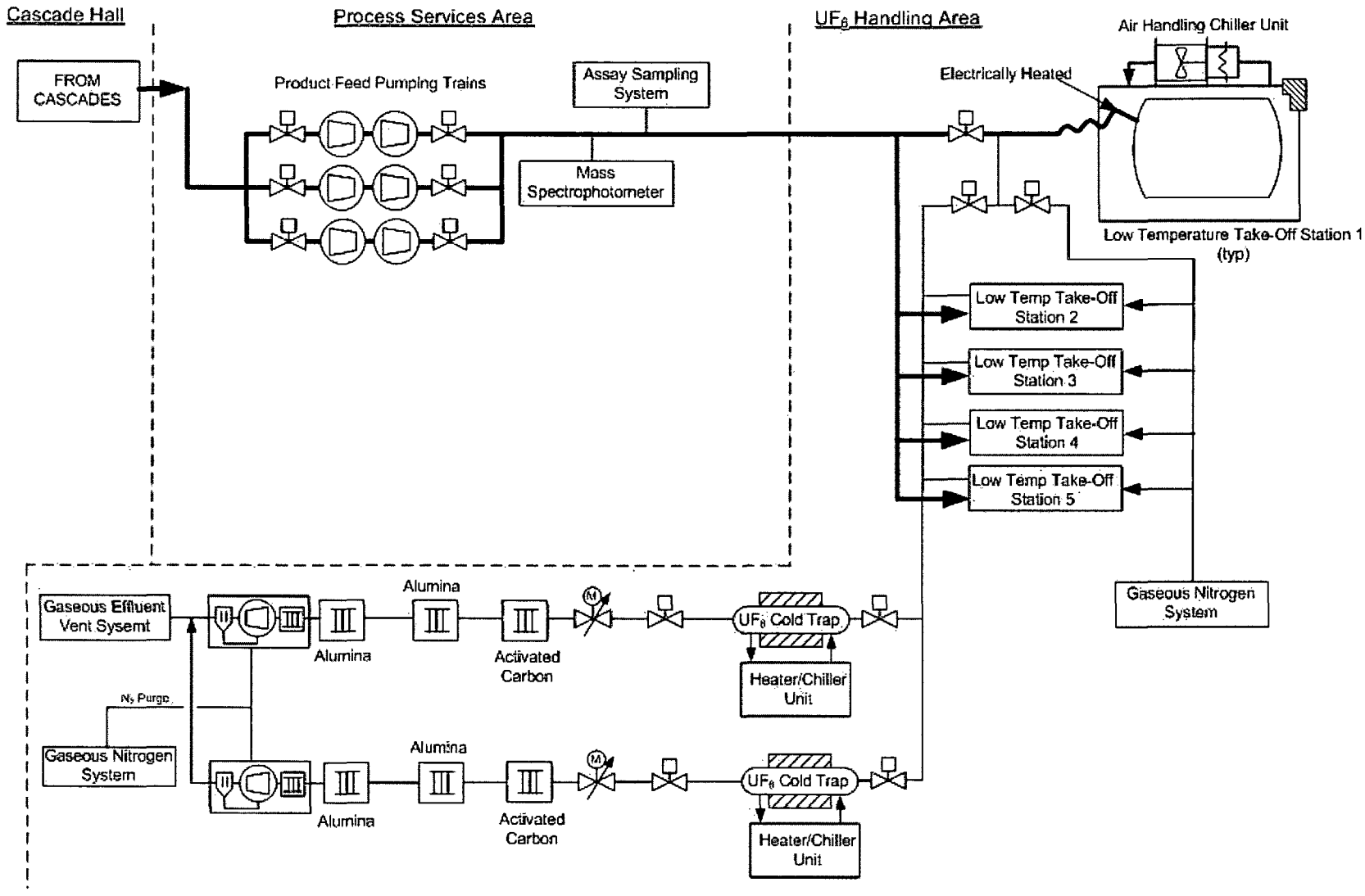

Figure 3.4-10 Process Flow Diagram Product Take-off System

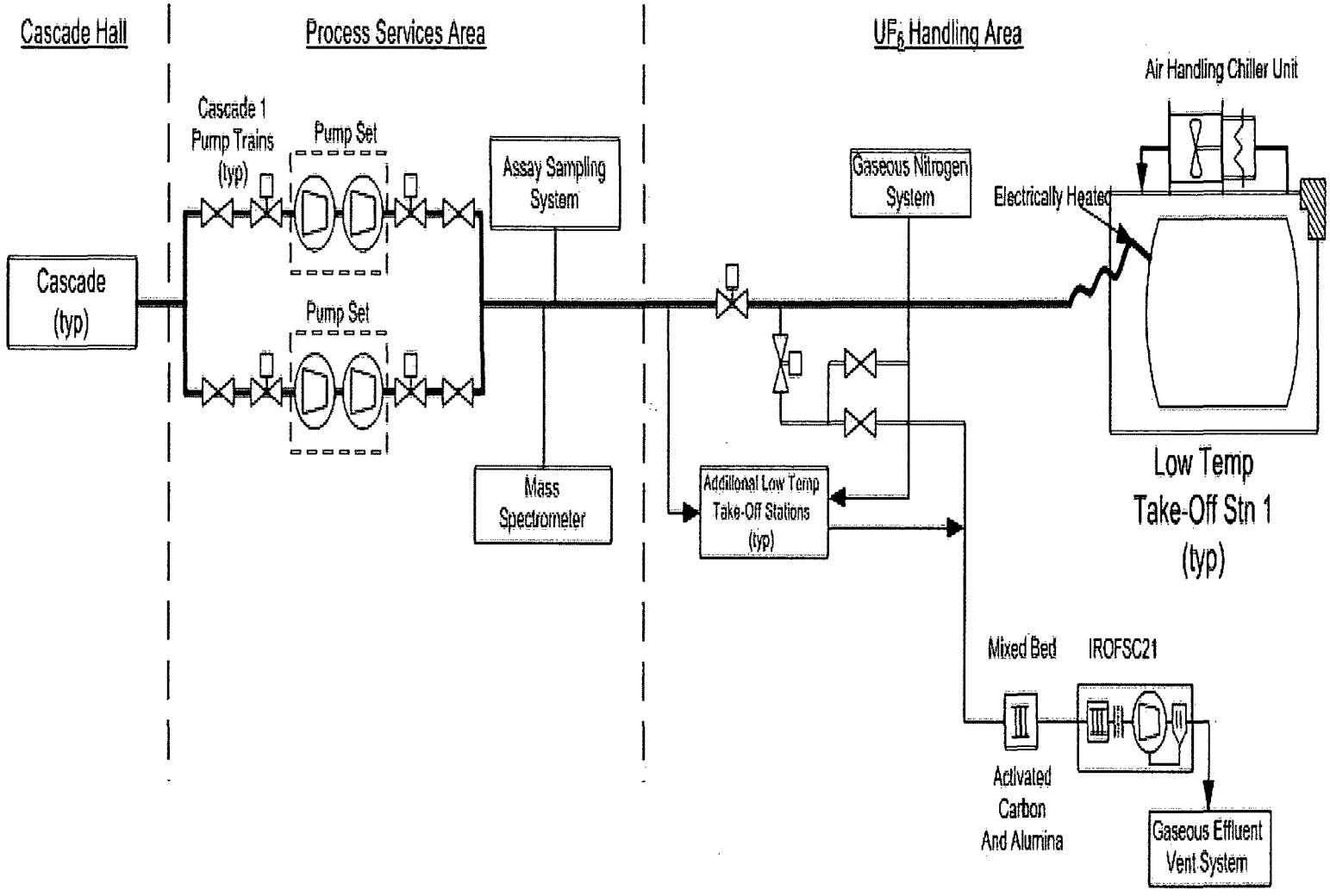

Figure 3.4-11 Process Flow Diagram Tails Take-off System

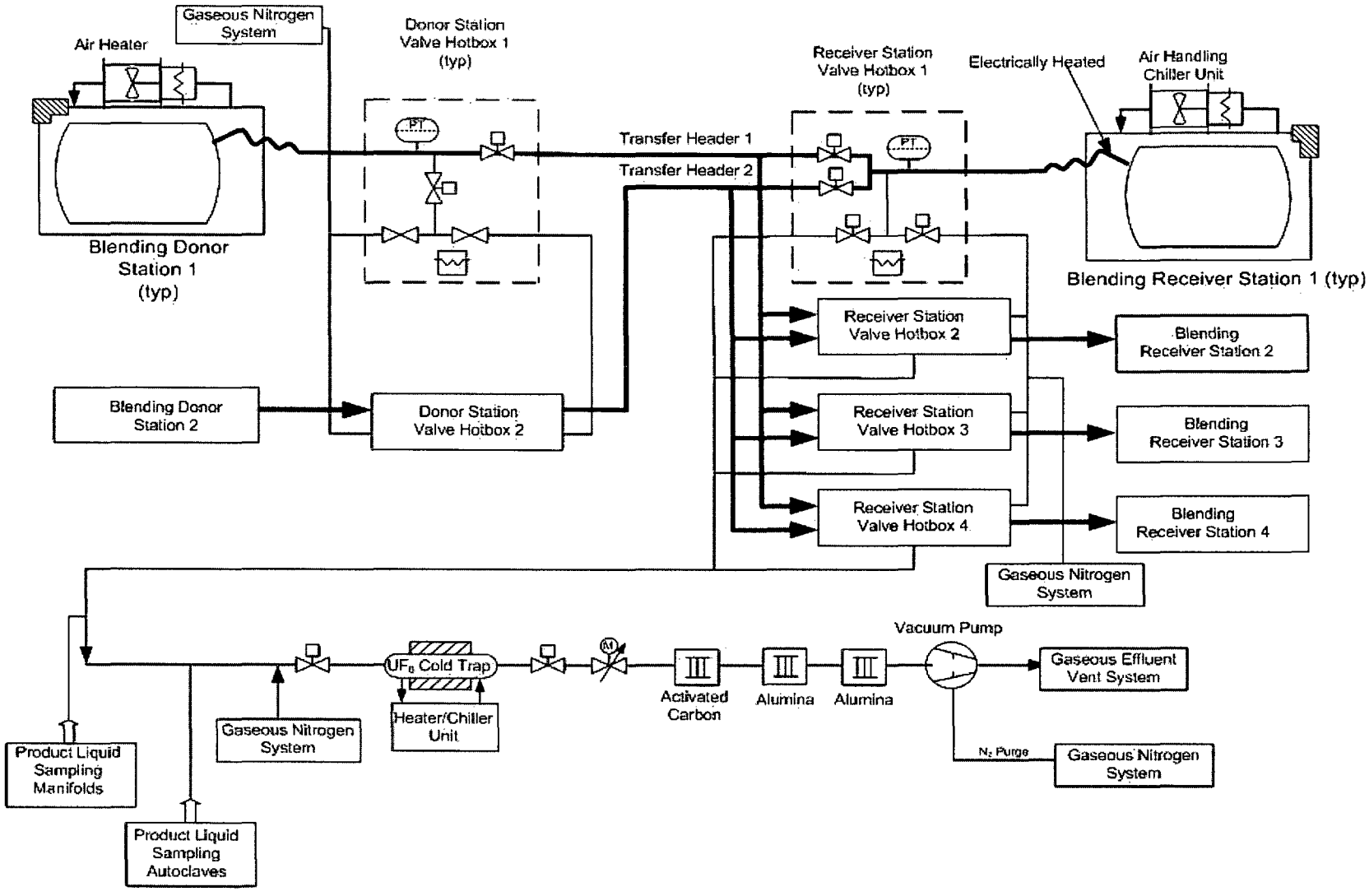

Figure 3.4-12 Process Flow Diagram Product Blending System

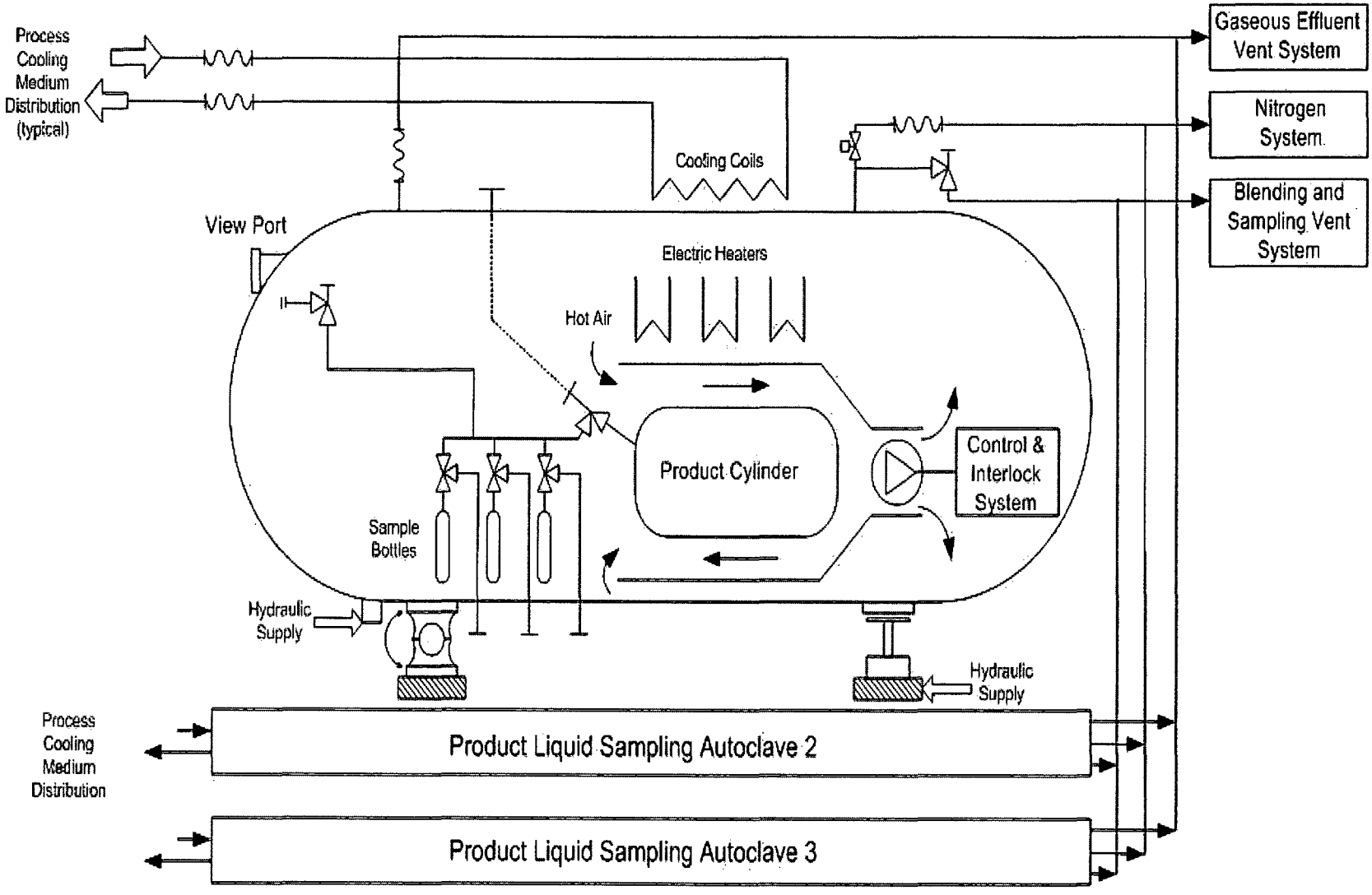

Figure 3.4-13 Process Flow Diagram Product Liquid Sampling System

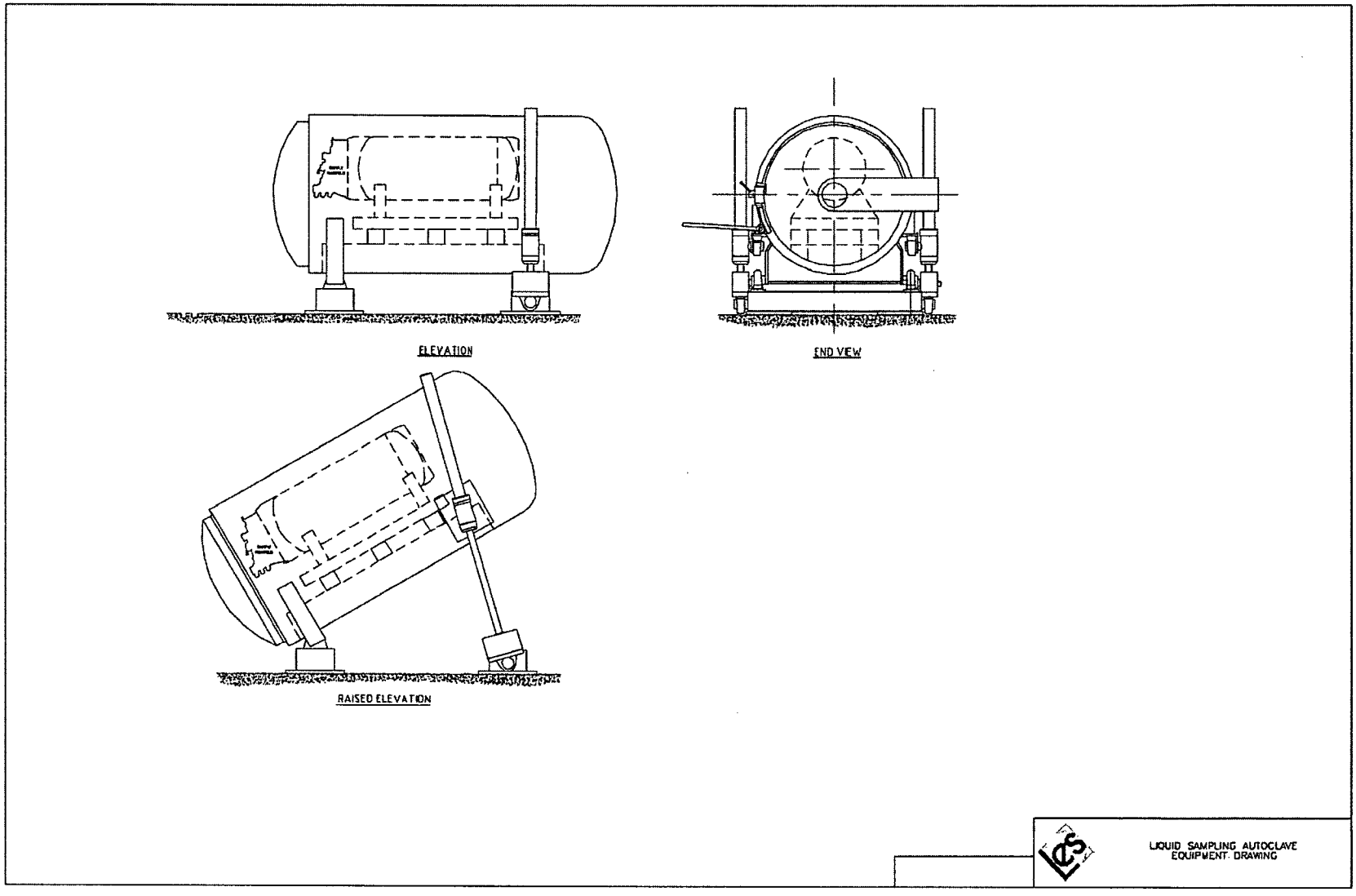

Figure 3.4-14 Liquid Sampling Autoclave Equipment Drawing

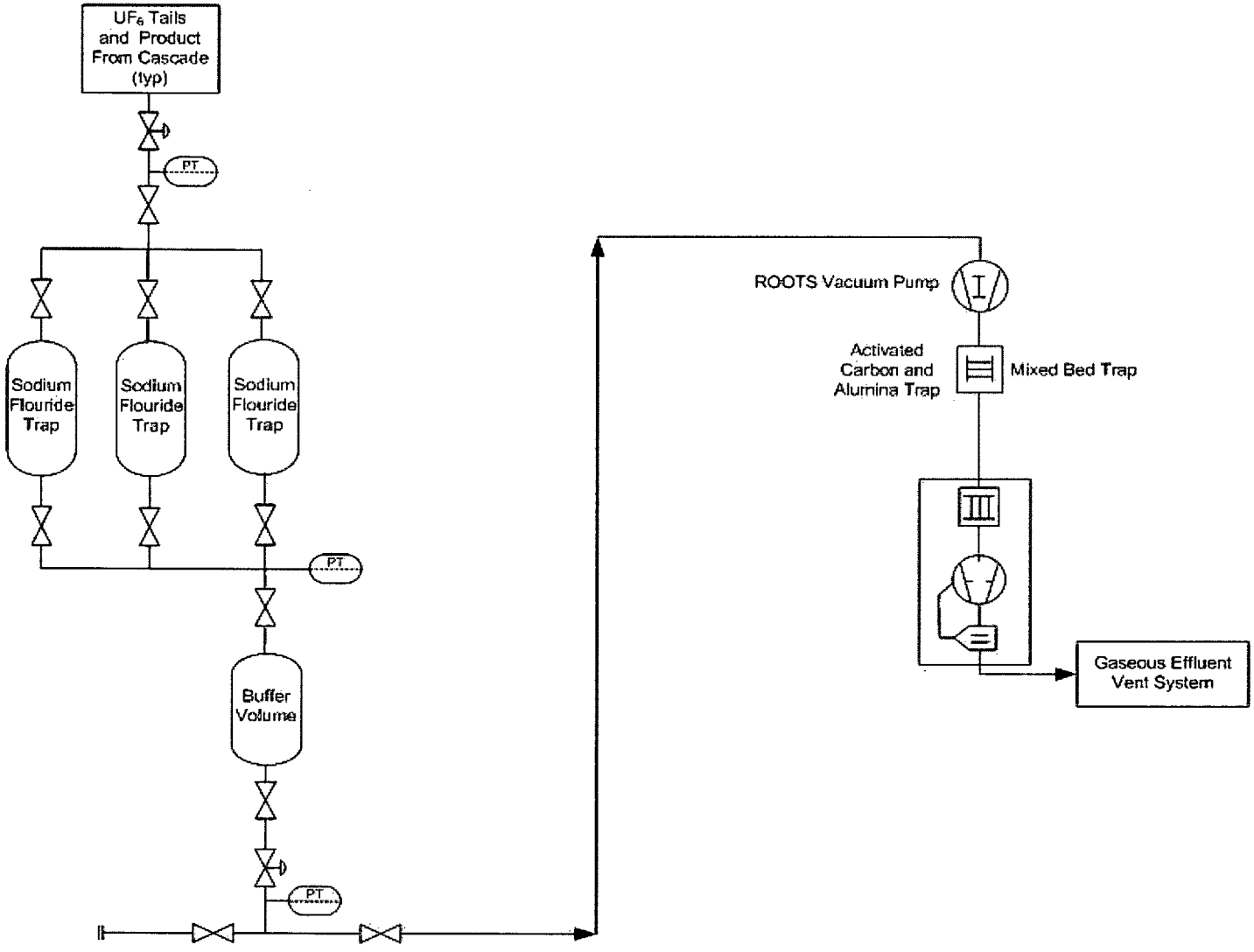

Figure 3.4-15 Process Flow Diagram Contingency Dump System

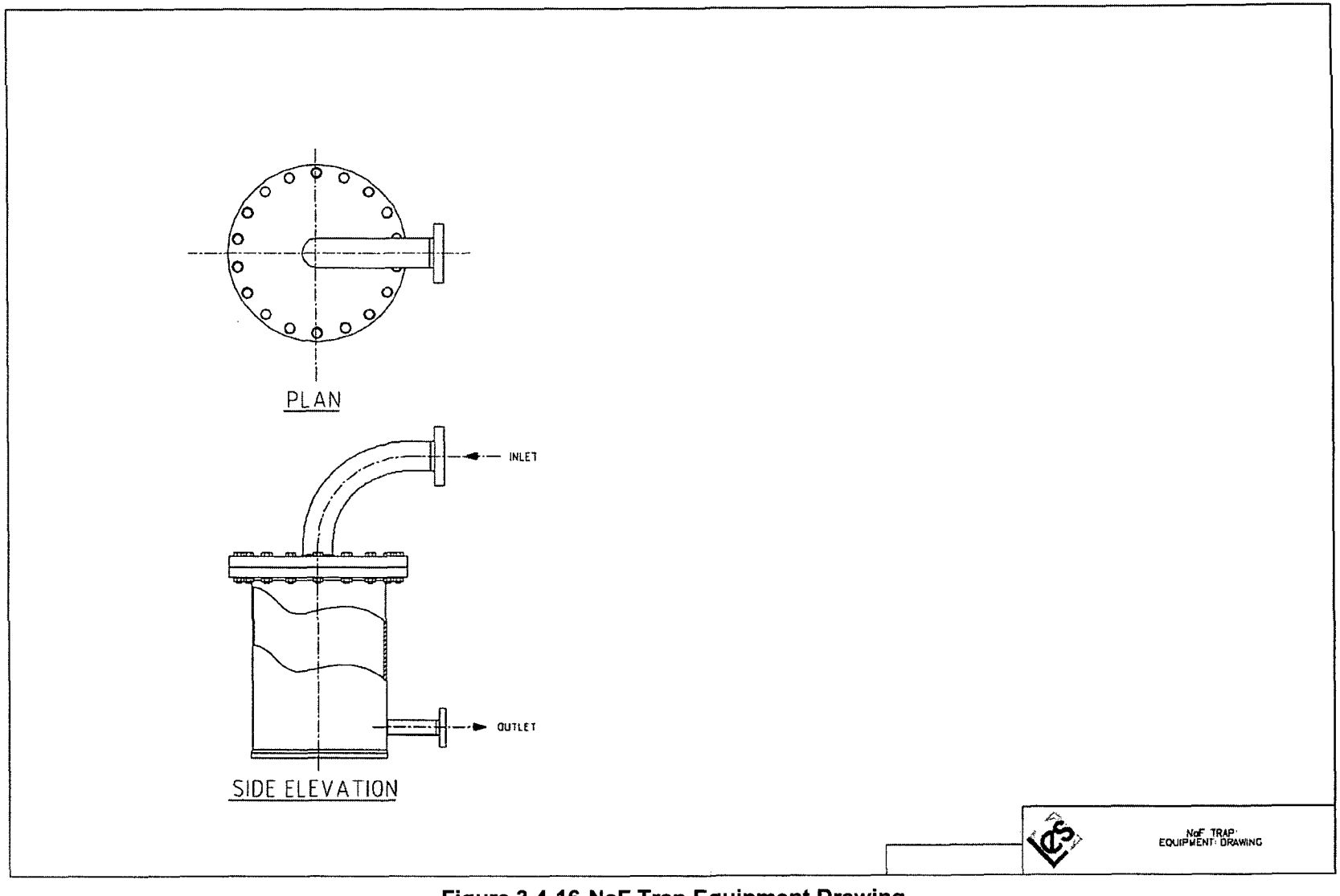

Figure 3.4-16 NaF Trap Equipment Drawing

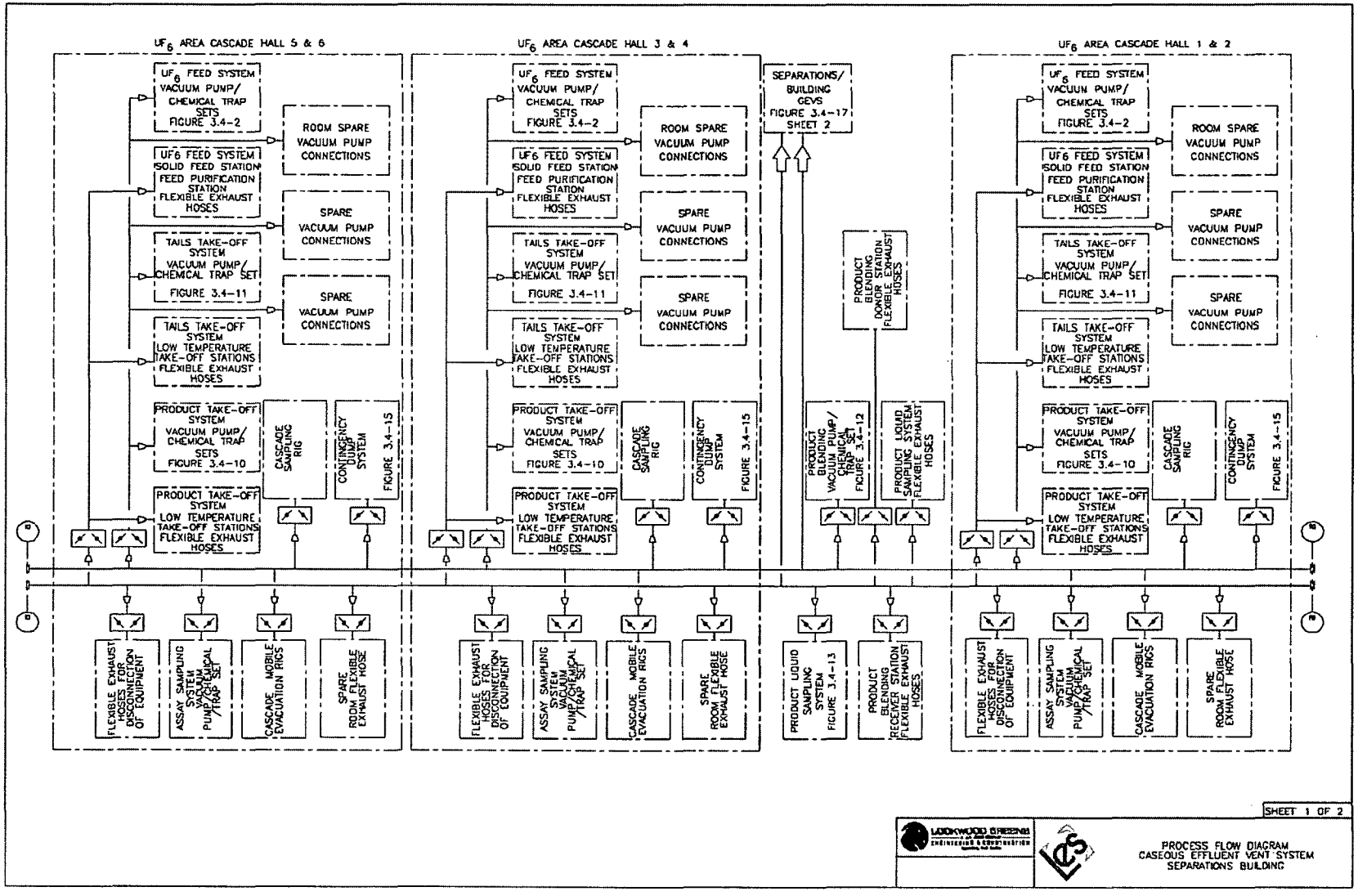

Figure 3.4-17 DELETE (Placeholder for new GEVS Design)

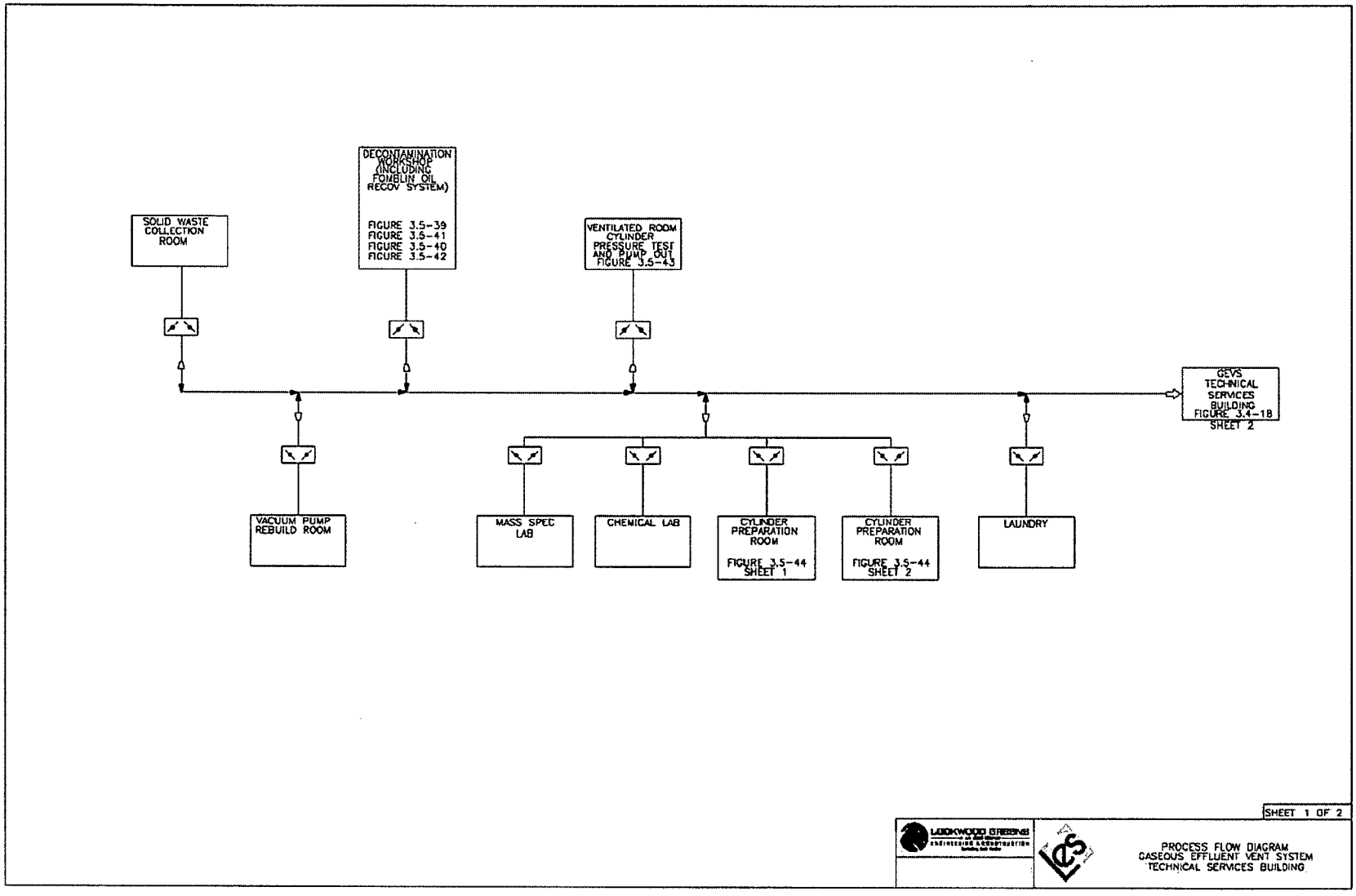

Figure 3.4-18 DELETE (Placeholder for new GEVS Design)

Figure 3.4-19 DELETE (Placeholder for new GEVS Design)

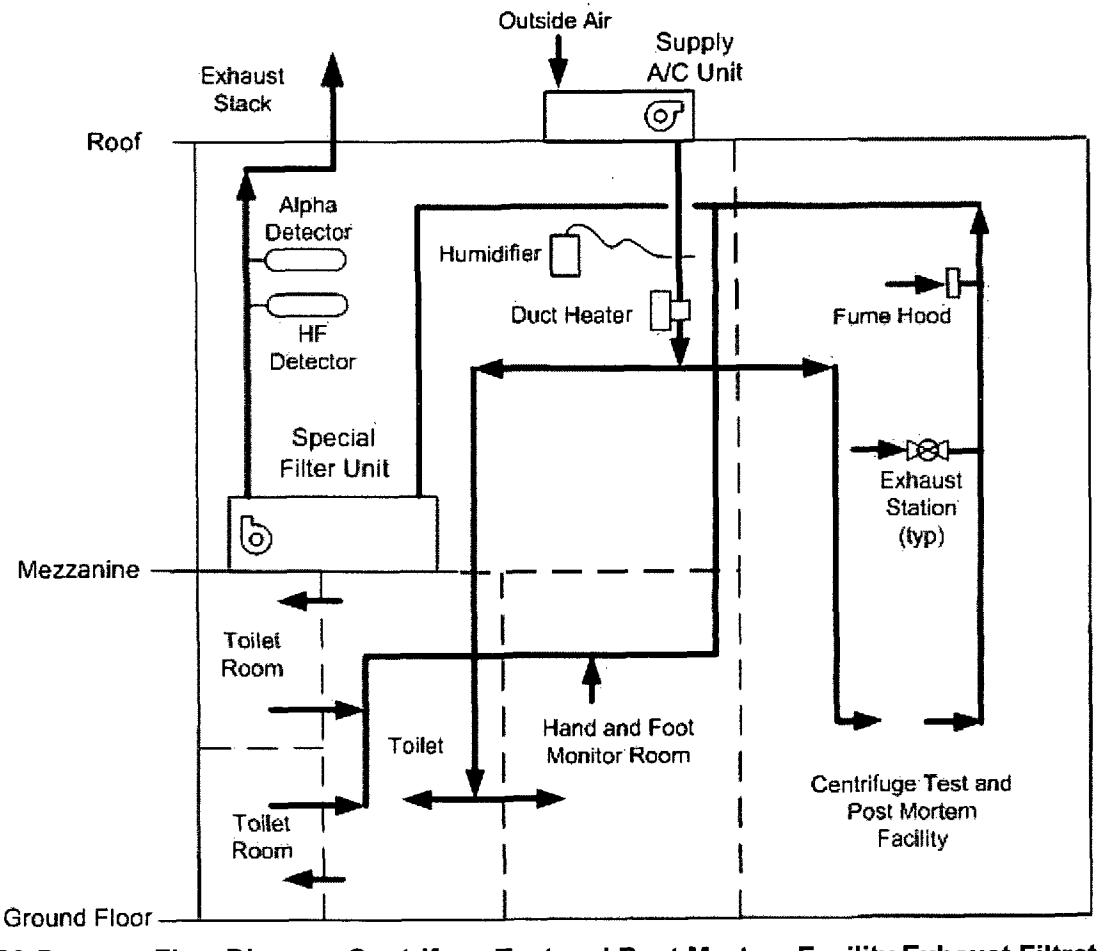

Figure 3.4-20 Process Flow Diagram Centrifuge Test and Post Mortem Facility Exhaust Filtration System

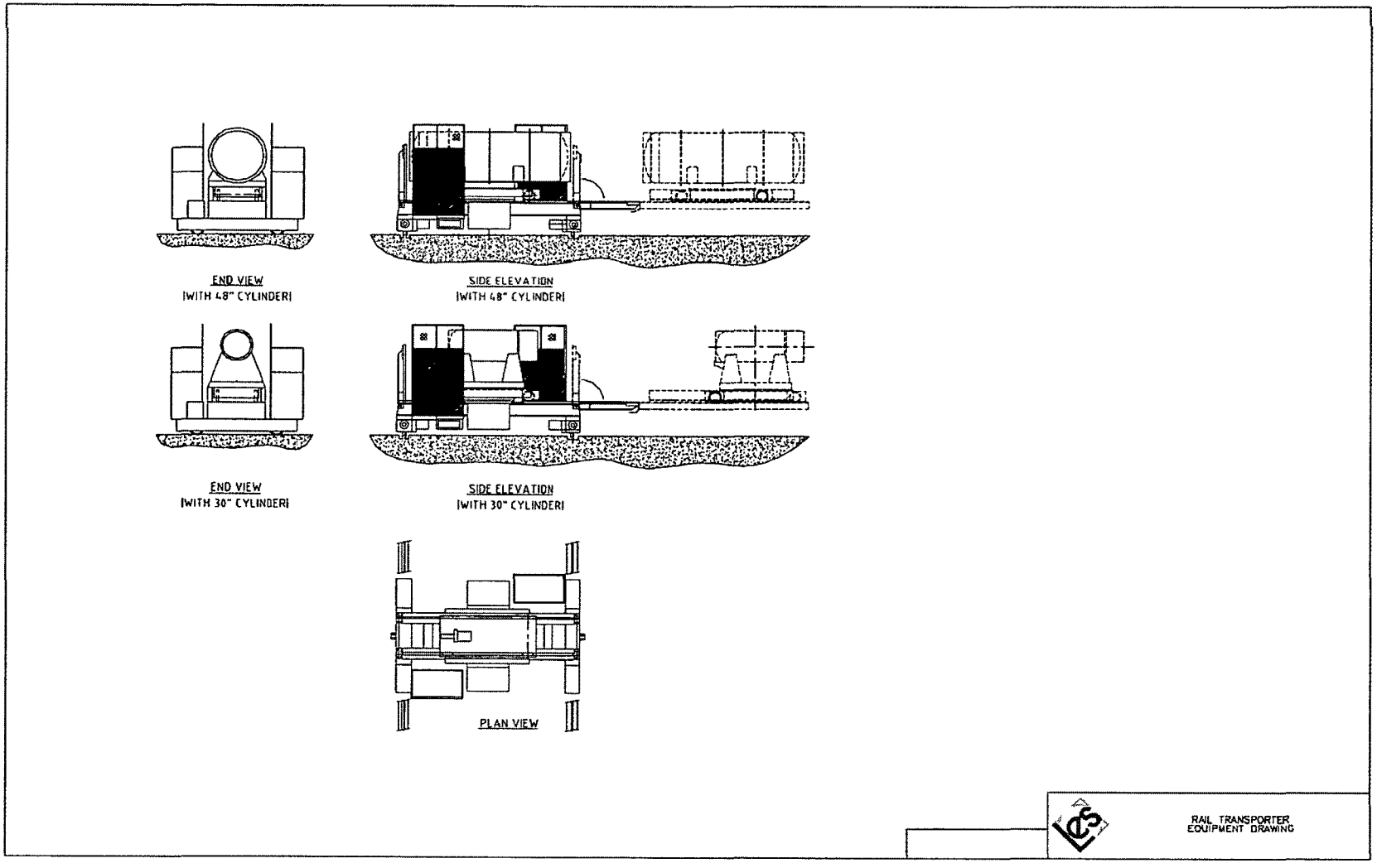

Figure 3.4-21 Rail Transporter Equipment Drawing

3.5 UTILITY AND SUPPORT SYSTEMS

Louisiana Energy Services' (LES) National Enrichment Facility (NEF) utility and support systems are described in this section. The information provided for each system emphasizes capacities, redundancies, and other provisions for coping with routine and non-routine events.

The National Enrichment Facility (NEF) consists of three Separations Building Modules (i.e., SBM-1001, SBM-1003, and SBM-1005). Some of the utility and support systems are duplicated in each SBM while other systems serve the entire facility. Descriptions and flow diagrams of duplicated systems presented in this section represent SBM-1001 systems, which are similar to the same systems in SBM-1003 SBM-1005. Any differences are clearly indicated in the text and figures.

The system descriptions provided for each system include functional requirements, design capacities, system interfaces, and descriptions of major components. In addition, operational characteristics are discussed for both routine operations and non-routine operations. Supporting information is provided in the form of flow diagrams to facilitate an understanding of the system design.

Finally, safety considerations are described for each system. The calculated values of k_{eff} provided in the following sections were obtained using the criticality code MONK8A (SA, 2001), in conjunction with the JEF2.2 nuclear data library. All values of k_{eff} given in the following sections are equal to $k_{calc} + 3\ \sigma_{calc}$ with a safety limit of 0.95. The health and safety of the public are protected such that a failure or inadvertent operation of any of the utility systems would not result in a release of hazardous quantities of chemicals or radiation. The basis for this conclusion is presented in Section 3.7, General Types of Accident Sequences, and Section 3.8, Items Relied on for Safety (IROFS).

Although many of the utility and support systems do not contain items relied on for safety, appropriate design and operating features that enhance public safety, worker safety, and facility reliability are provided for each system. Items relied on for safety, which are associated with utility and support systems, are listed in Section 3.8, Items Relied On For Safety (IROFS). The Codes and Standards generally applicable to the utility and support systems are listed in Table 3.5-1, Codes and Standards.

3.5.1 Building Ventilation

Note: The Heating Ventilation and Air Conditioning (HVAC) systems and Gaseous Effluent Vent Systems (GEVS) for the NEF are undergoing redesign. After these design changes are finalized the information in Section 3.5.1 (Building Ventilation), Section 3.4.9 (Gaseous Effluent Vent Systems), and other sections that reference GEVS will be revised accordingly.

UF_6 enrichment operations are partitioned into three Separations Building Modules (SBMs). Each SBM has dedicated Heating, Ventilating, and Air Conditioning (HVAC) systems supporting distinct areas. These areas are as follows:

A. Low Voltage and Transformer Rooms
B. Process Services Corridors
C. Link Corridors
D. UF_6 Handling Areas/Blending and Liquid Sampling Areas.

E. Cascade Halls (above thermal enclosures)

The remaining buildings at the facility also have dedicated HVAC systems (Ref. Figures 3.3-2 through 3.3-16 and Figures 3.5-1 through 3.5-12), These buildings are as follows:

A. Cylinder Receipt and Dispatch Building (CRDB)
B. Centrifuge Assembly Building (CAB)
C. Technical Services Building (TSB)
D. Security Building
E. Administration Building
F. Central Utilities Building (CUB)
G. Other support buildings/warehouses

The individual HVAC systems are designed to maintain the specific environmental conditions associated with processes undertaken within a particular area. In areas where there is a potential for radioactive contamination, the areas are maintained at a slightly negative pressure relative to the surrounding areas. Although the individual HVAC systems have unique inside design parameters, the outside design environmental conditions are the same for every HVAC system.

3.5.1.1 System Descriptions

The specific design features for each HVAC system are described in this section.

3.5.1.1.1 Cascade Halls

There are no HVAC systems or HVAC equipment associated with the Cascade Halls (within the thermal enclosures, environment above thermal enclosure is controlled). The Cascade Halls are confined spacecs per 29 CFR 1910 (OSHA) that contain the centrifuges. Air is not circulated in the area within the thermal enclosures of the Cascade Halls. The heat generated from the Cascade Halls is removed by the Centrifuge Cooling Water distribution piping.

The Above Cascade Area HVAC System (Ref. Figure 3.5-2, Flow Diagram, Process Services Corridor Above Cascade, HVAC System) maintains room temperature in the Above Cascade Area. The HVAC system consists of a Split System Air Conditioning System.

3.5.1.1.2 Electrical Room HVAC System

The first floor Electrical Room HVAC System (Ref. Figure 3.5-1, Flow Diagram Separations Building Module Electrical Room and Link Corridor Area HVAC Systems) in each SBM maintains room temperature in the Low Voltage and Transformer Rooms. The HVAC system consists of a Split System Air Conditioning System.

A majority of the area ventilation air is recirculated and the remaining air is discharged to the atmosphere. The Low Voltage and Transformer Rooms are maintained at neutral pressure by balancing the supply flow rate with leakage, exhaust, and recirculation airflow rates.

3.5.1.1.3 Process Services Corridor HVAC System

The Process Services Corridor HVAC System in each Separations Building module maintains room temperature in the Process Services Corridor.

The first, second, and third floor Process Service Corridor HVAC system (Ref. Figure 3.5-3, Flow Diagram Process Services Corridors, First, Second and Third HVAC System) consists of a Split System Air Conditioning System.

A majority of the area ventilation air is recirculated, and the remaining air is discharged to the atmosphere. The Process Services Corridors are maintained at neutral pressure by balancing the supply flow rate with leakage, exhaust and recirculation airflow rates.

3.5.1.1.4 Link Corridor HVAC System

The "Link" Corridor Area HVAC System(Ref. Figure 3.5-1, Flow Diagram Separations Building Module Electrical Room and Link Corridor HVAC Systems) maintains room temperature in the "Link" corridor. The "Link" first and second floor HVAC system consists of a Split System Air Conditioning System.

3.5.1.1.5 UF_6 Handling Area/Blending and Liquid Sampling Area HVAC System

The UF_6 Handling Area/Blending and Liquid Sampling Area HVAC System (Ref. Figure 3.5-4, Flow Diagram UF_6 Handling Area/Blending and Sampling HVAC System) in each Separations Building Module maintains the air temperature in the UF_6 Handling Area/Blending and Liquid Sampling Area. The HVAC system is comprised of a Split System Air Conditioning System.

A majority of the ventilation air is recirculated, and the remaining air is discharged to the atmosphere. The UF_6 Handling Area/Blending and Liquid Sampling Area is maintained at neutral pressure by balancing the supply flow rate with leakage, exhaust and recirculation airflow rates.

Technical Services Building (TSB) HVAC System

The TSB HVAC System maintains the room temperature in the building The TSB HVAC System consists of six large rooftop air conditioning units and one large air conditioning unit placed on the ground near the TSB. The system is supplemented with electric duct mounted heaters and small air conditioning units. Twelve roof-mounted return/exhaust fans provide return airflow. The Control Room, Central Alarm Station, Emergency Operations Center and associated areas are cooled by two units, one of which is provided with diesel backed power for investment protection. The HVAC system flow diagrams are shown in the following figures:

- Figure 3.5-5, Flow Diagram, TSB First Floor HVAC System
- Figure 3.5-6, Flow Diagram, TSB Second Floor HVAC System

3.5.1.1.6 Centrifuge Assembly Building HVAC System

The Centrifuge Assembly Building (CAB) HVAC System maintains room temperature in the Centrifuge Assembly Building.

All areas of the CAB are cooled using direct expansion (DX) roof-top mounted air conditioning (A/C) units. Each A/C unit consist of an air intake and return air mixing section, a filter section, an electric heating section and a supply fan. Dedicated return fans are not utilized. All A/C units are fitted with digital controls and can be operated and monitored from a central control station located inside the CAB. Each A/C unit can also be controlled manually using a local microprocessor located inside the A/C unit on the roof.

The control system for the A/C units consists of a temperature sensor which controls loading of the air conditioning compressors (cooling mode) or the electric heaters (heating mode). Digital process sensors measure key HVAC parameters such as filter differential pressure, air flow and air temperature. Certain parameters are alarmed and will be displayed at the central digital control station, or in some cases, on the local microprocessor. For the A/C units which supply the Centrifuge Assembly Areas, additional controls are provided to ensure that sufficient outside air is used to keep the Centrifuge Assembly Areas at a slightly positive pressure.

Centrifuge Assembly Areas A and B are provided with air filtration units (AFUs). These units consist of a return air section, a filter section and a supply fan. The AFU units operate in 100% recirculation mode to continuously filter the air in the Centrifuge Assembly Areas. AFUs are fitted with High Efficiency Particulate Air (HEPA) filters.

All AFUs are fitted with digital controls and can be operated and monitored from a central control station located inside the CAB. Each AFU can also be controlled manually using a local microprocessor located inside the AFU on the roof. Digital process sensors measure key AFU parameters such as filter differential pressure and air flow. Certain parameters are alarmed and will be displayed at the central digital control station, or in some cases, on the local microprocessor.

Air filtration for Centrifuge Assembly Area C is provided by the A/C units which serve this area. Separate AFUs for Centrifuge Assembly Area C are not provided.

The Centrifuge Component Storage Area HVAC System consists of five A/C units. The system flow diagram is shown on Figure 3.5-7, Flow Diagram CAB Centrifuge Component Storage Area, Assembled Centrifuge Storage Area and Server Room HVAC Systems.

One 100% A/C unit supplies conditioned air to the Centrifuge Staging Area and the West Electrical Room. Four 50% A/C units supply conditioned air to the Centrifuge Component Storage Area and the East Electrical Room.

The Centrifuge Test and Post Mortem Areas HVAC System consists of one 100% capacity A/C unit and one 100% capacity exhaust fan with a special filter unit. The system serves the Centrifuge Test and Post Mortem Areas. The Centrifuge Test and Post Mortem Exhaust Filtration System continuously filters exhaust air through an owner specified filter arrangement and discharges to the exhaust stack. This system is designed to operate in a once-through configuration. The description of this system is provided in Section 3.4.10.3, Centrifuge Test and Post Mortem Facilities Exhaust Filtration System.

The Office Area HVAC System consists of one, 100% capacity A/C . A minimum of 10% outside air is provided for ventilation. The system serves the offices, canteen, change areas, the Inspection and Test Lab, the Maintenance Area, the Air Compressor Room and entrance areas. The system flow diagram is shown on Figure 3.5-18, Flow Diagram, CAB Offices and Miscellaneous Rooms, HVAC System.

The HVAC system for Centrifuge Assembly Areas A and B consists of three 50% capacity A/C units and five recirculation AFUs. The HVAC system for Centrifuge Assembly Area C consists of five 50% capacity A/C units which also provide a filtering function. As protection of CAB investments (centrifuges and equipment) against the deleterious effects of airborne contaminants, the Centrifuge Assembly Areas will meet 14644-1 Class 8 (operational state) clean room requirements. Centrifuge Assembly Area A and C are maintained at a positive pressure with respect to the outside and adjacent airlocks. The system flow diagram is shown on Figure 3.5-9, Sheets 1 and 2 Flow Diagram Centrifuge Assembly Area, HVAC System.

The Computer Server Rooms HVAC consist of three, 100% capacity A/C units . This subsystem is designed to operate in a recirculation configuration and is shown on Figure 3.5-15A.

Spaces in the CAB are maintained within the applicable environmental design conditions by the CAB HVAC systems. Parameters such as air temperature, relative humidity and ambient pressure are automatically monitored and controlled.

3.5.1.1.7 Cylinder Receipt and Dispatch Building Heating and Ventilation System

The Cylinder Receipt and Dispatch Building (CRDB) Heating and Ventilating System maintains room temperature in the CRDB. The HVAC system consists of ten 10% capacity AHU's and ten 10% capacity return/exhaust fans. The system components are shown on Figures 3.5-10 and 3.5-11.

A majority of the area ventilation air is recirculated, and the remaining air is discharged to the atmosphere. The CRDB is maintained at neutral pressure by balancing the supply flow rate with leakage, exhaust, and recirculation airflow rates.

3.5.1.1.8 Security Building HVAC System

The Security Building HVAC System maintains temperature in the Security Building.

The Security Building HVAC System consists of 5 packaged Direct Expansion systems with 5 constant volume supply fans. The ventilation system for the Security Building is designed to maintain the Security Building at slightly positive pressure to minimize the infiltration of dust and other undesirable airborne materials.

Room Temperature	Year Round 22°C ± 2°C (72°F ± 3.6°F)
Relative Humidity	40% Design point

A majority of the building ventilation air is recirculated, and the remaining air is discharged through exhaust fans or will leak through exfiltration.

3.5.1.1.9 Administration Building HVAC System

The Administration Building HVAC System maintains temperature in the Administration Building.

The Administration Building HVAC System consists of one Packaged Variable Volume Rooftop unit with one supply fan and one return fan. Each zone is provided with a variable air volume (VAV) box with electric heat.

The Administration Building HVAC System is designed to maintain the Administration Building at a slightly positive pressure to minimize infiltration of dust and other undesirable airborne materials.

The environmental control parameters for the Administration Building HVAC System are provided below.

Room Temperature	Year Round 22°C ± 2°C (72°F ± 3.6°F)
Relative Humidity	40% Design point

A majority of the building ventilation air is recirculated, and the remaining air is discharged through exfiltration and toilet exhaust fans.

3.5.1.1.10 Central Utilities Building HVAC System

The Central Utilities Building (CUB) HVAC System provides environmental control in the CUB. The CUB consists of the following rooms: Standby-Diesel Generator Room, Air Compressor Room, Cable Vault, Mechanical Equipment Room and multiple Electrical Rooms.

The Mechanical Room and Air Compressor Area are air conditioned and heated by two split-system 100% capacity air conditioning units (ACUs). The system serving the Stand-by Diesel Generator Room does not maintain conditions when generators are running. Cooling is provided for the Electrical Rooms supporting the Standby Diesel Generators during loss of normal power. Each Diesel Generator Electrical Room is provided with one split type air conditioning unit powered by the corresponding Diesel Generator. The other Electrical Rooms are air conditioned and heated by three split-system 50% capacity ACUs. Combustion air and cooling air is provided to each Standby Diesel Generator room by screened and missile protected automatic inlet air louvers. The system components are shown on Figure 3.5-12, Flow Diagram Central Utilities Building HVAC System.

The environmental control parameters for the CUB HVAC System are provided below:

Centrifuge Cooling Water Area, Electrical Rooms/Area, Stand-by Diesel Generator Rooms, Air Compressor Area, and Battery Rooms:

Room Temperature	32°C (90°F) max/18.3°C (65°F) min
Relative Humidity	No Control

The ventilation system for the CUB Area is designed to maintain the CUB Area at neutral pressure by balancing the supply flow rate with leakage and exhaust.

3.5.1.2 Major Components

The major components for each ventilation system are detailed above in Section 3.5.1.1, System Description.

3.5.1.3 System Interfaces

HVAC systems interface with the utility systems listed below.

A. The Compressed Air System provides instrument air to pneumatic control components.

B. The Electrical System provides electrical power to HVAC system components. Split-system ACUs are provided to cool support equipment for each Standby Diesel Generators. These units receive backup power from the respective SDG.

C. The Plant Control System provides limited monitoring for the HVAC system.

3.5.1.4 Operational Characteristics

With the exception of the CAB, the HVAC systems are operated from local control panels or as in the CAB from a central control panel. Group alarms and system status are provided in the Control Room. The HVAC systems are balanced to ensure that neutral, slightly positive or slightly negative pressure is maintained depending on the specific area. Control of the CAB HVAC Systems are described in Section 3.5.1.1.8.

3.5.1.4.1 Routine Operation

There are a variety of HVAC arrangements that include rooftop units, split (direct expansion) units, and exhaust fans for the various buildings. A typical operating scheme is provided as an example: After a start signal has been provided, one AHU supply fan starts. When flow through the supply fan has been established, one return/exhaust fan is started. When air flow in the room is established, the second supply fan is started, followed by the remaining exhaust fan. Temperature control is maintained by sensing the return air temperature, the outside air temperature, and the air handling unit leaving air temperature. The supply fan capacity is controlled by modulating the fan inlet vane control damper to maintain constant static pressure in the supply duct. The return/exhaust air flow is maintained constant by modulating the fan inlet van control damper.

The supply fan capacity is controlled by modulating the fan inlet vane control damper to maintain constant static pressure in the supply duct. The return/exhaust air flow is maintained constant by modulating the fan inlet vane control damper.

3.5.1.4.2 Non-routine Operation

Component failures would result in reduced system capacity but would not affect facility safety. A failure would be indicated and alarmed in the Control Room. The consequences of assumed failure modes are discussed below:

A. AHU Failure. An AHU failure could result in a temperature excursion in the area. An AHU failure could cause the remaining AHUs flow control valves to open and the outside air control dampers to close on the travel stops. Note that the temperature excursion is more severe in HVAC systems that have only one AHU.

B. Supply Fan Failure. A supply fan failure could result in temperature or pressure excursion in the area. A single fan failure could cause a return/exhaust fan to automatically shut down, the remaining supply fan inlet vane control damper to open fully, and the appropriate temperature control devices to open fully.

C. Return/Exhaust Fan Failure. A return/exhaust fan failure could result in a pressure excursion in the area. A single return/exhaust fan failure would cause the supply fan's inlet vane control damper to adjust to a stable operating position.

D. Control System or Electrical System Failure. A general failure of the Control System or Electrical System could lead to a total loss of ventilation due to erroneous trips or false operation.

3.5.1.5 Safety Considerations

The total failure of an HVAC system could be caused by natural phenomena, loss of offsite power, or loss of the control system. This failure could result in temperature and pressure increases or decreases in the affected area, and would be detected by flow and temperature measurements. The Control Room in the TSB and Standby Diesel Generator (SDG) support equipment in the CUB have been provided with HVAC systems powered by the security diesel generator and the CUB's SDGs, respectively. Failure of any of the HVAC systems would not endanger the health or safety of workers and the public.

During release of UF_6, HVAC Systems would be shut down in the affected area. This would limit the spread and release of airborne materials from the area. The HF concentration would increase in the affected area, and un-reacted UF_6 and uranyl fluoride (UO_2F_2) would settle out in the area.

In the unlikely event of such an incident, operators would put on an air suit and re-enter the affected area to isolate the source of the release. It is not possible to give specific conditions that need to be met before the HVAC systems are restarted as every incident would be subject to a separate assessment involving senior management. In general, however, the aim is to clean up, collect and package all escaped uranic material before the HVAC systems are switched on again. No specific action is envisioned with regard to the HF associated with any release, as this would probably disperse through natural room leakage during the time uranic clean-up operations were underway. The filtered exhaust will continue to operate to limit the spread of airborne materials from the area.

3.5.2 Electrical System

The NEF overall electrical power distribution system is designed with a high level of redundancy to maintain a reliable power supply to the process equipment for investment protection. Total loss of electrical power does not have any safety implications.

3.5.2.1 System Description

The Electrical System (Ref. Figure 3.5-13, Single Line Diagram Electrical System) design complies with the following codes and standards.

- IEEE C2, National Electrical Safety Code
- New Mexico Electric Code (based on the National Electric Code, NFPA 70)
- NFPA 70E, Standard for Electrical Safety in the Workplace

3.5.2.1.1 Incoming Power Source

The main source of supply of electrical power for the facility is derived by means of two synchronized 115 kV overhead transmission lines from an extended ring bus loop in the Xcel Energy (the utility) system grid. Each line is rated to supply the total power requirements of the facility.

The 115 kV lines power the utility substation provided by the utility for the facility service. Duplicate transformers are used in the substation to transform the 115 kV to 13 kV for the facility electrical power distribution system. Each transformer can be supplied from either 115 kV line and is rated to supply the total power requirements of the facility.

3.5.2.1.2 Overall Site Power Distribution

The 115kV utility substation transformers supply duplicate sets of 13 kV switchgear that distribute power to the site substation transformers. Either of the duplicate switchgears can be supplied from either of the transformers. The site substation transformers convert the 13 kV supply voltage to the voltages needed for utilization in the facility.

3.5.2.1.3 Onsite Power Sources

Standby Diesel Generators are provided to power equipment that can tolerate a short break (short break load) in the normal power supply. This capability is needed to allow for an orderly shutdown of the facility. Each of the Standby Diesel Generators is sized for 100% of the short break load requirement of the equipment to which it is connected. The Standby Diesel Generators are not required for safe operation of the facility and are installed to provide protection of investment only.

A security diesel generator is provided to power select security equipment. The security diesel generator is not required for safe operation of the facility.

Uninterruptible Power Supply (UPS) systems are provided to power the facility process equipment that do not tolerate a break (no break load) in the normal power supply. Input power for this UPS system is normally provided by the short break power system with backup from the Standby Diesel Generators. Batteries power the UPS if all other input power is lost. Each of the UPS systems is sized for 100% of its connected load.

Additional UPS systems with battery backup are installed to provide no break power to support systems such as emergency lighting. These systems are sized and located as necessary to provide the requirements of the equipment served. Systems requiring no break power are listed in Section 3.5.2.4, Operating Characteristics.

Duplicate batteries supply operating power for the 13 kV switchgear.

Batteries provide starting power for each Standby Diesel Generator and operating power for each UPS system.

3.5.2.2 Major Components

The following are the major electrical distribution system components:

A. 115 kV – 13 kV Utility Substation. The utility substation provided by the utility will consist of 115 kV circuit breakers and switches; and two, 13 kV breakers to provide the dual 13 kV regulated sources for the facility. Two 115 kV to 13 kV Load tap Changer (LTC) transformers owned by LES will be located in the utility substation.

   Dual incoming power supply lines are used to assure continuous power supply to the facility. Each line can provide the total power requirement for facility operation.

Duplicate transformers are used to transform the 115 kV to 13 kV for the site electrical power distribution system. Each transformer can be supplied from either line and is rated to supply the total power requirements of the facility. To offset the voltage variations in the two incoming 115 kV lines, the transformers are equipped with automatic LTC equipment that maintains the facility supply voltage at the rated value.

B. 13 kV Visible Blade Disconnect Switches. Visible blade 13 kV disconnect switches are provided at the points of interconnection between the utility substation supply circuits and the facility distribution system. These switches provide visual verification of the isolation of the two systems for maintenance or repair.

C. 13 kV Switchgear. The 13 kV medium voltage distribution system consists of duplicate switchgearsthat can be connected together by means of a tie breaker.

   Each 13 kV switchgear consists of a main bus, main input breaker, a shared tie breaker, and feeder breakers.

D. 13 kV Feeder Circuits. 13 kV feeder circuits provide power to the distribution system transformers.

E. Left Intentionally Blank

F. 480 V Switchgear. Two sets of 480 V, 3-phase, 60 Hz, switchgear are provided to supply normal load power for central utilities, the support services, and the SBMs (Cascade Halls UF_6 Handling Areas, and the Process Services Corridors). Loads will generally have a dedicated connection to either the A or B supply. Some loads are provided with selectable connection to either A or B supply.

   Each SBM has two double-ended switchgears to supply variable frequency drive equipment. SBM switchgears are each fed from dedicated transformers. A common standby transformer serves both system's standby switchgears.

G. Short Break Load System. The short break load 480 V distribution system originates with duplicate switchgears. These switchgears are normally supplied from one of two, 13 kV to 480 V transformers, with either switchgear capable of being supplied from either transformer. Each switchgear can also be supplied by a designated Standby Diesel Generator.

   The short break load distribution system supplies power to equipment listed in Section 3.5.2.4.

H. Standby Diesel Generators. Duplicate Standby Diesel Generators supply standby power for the short break load system. Each Standby Diesel Generator supplies a designated switchgear.

I. Process UPS (No Break) System. Two battery backed UPS units provide power for the process no break loads. Normal input power to the UPSs is from the diesel generator backed up short break switchgear lineups. The batteries power the UPSs if all normal input power is lost. Each UPS is sized for 100% of it's connected load.

J. Security System Backup Electrical System. A standby diesel generator and UPS provide backup electrical power for selected security equipment.

The process UPS no break load distribution system supplies power to equipment listed in Section 3.5.2.4.

3.5.2.3 Interfaces

The Electrical System interfaces with the Plant Control System (PCS) for monitoring only. The Electrical System signals are centralized in the 13 kV switchgear room and re-transmitted to the PCS.

The following electrical systems are monitored by the PCS.

A. 115 kV – 13 kV Utility Substation
B. 13 kV Switchgear
C. Left Intentionally Blank
D. 480/460 V Switchgear
E. Standby Diesel Generators
F. UPS Systems.

3.5.2.4 Operating Characteristics

The facility process load requirements are categorized as follows:

Normal Loads

All normal load equipment is fed from electrical distribution equipment which is not backed-up by either the Standby Diesel Generators or the UPSs. The normal load power distribution equipment is served by the duplicate 115 kV lines, duplicate main transformers and duplicate 13 kV switchgear.

Short Break Loads

The following equipment is supplied power from the short break power distribution system described in Section 3.5.2.2, Major Components.

A. Tails Take-off System pump sets
B. Heat Tracing Power including Valve and Inlet piping heaters Low Temperature Take-off Stations
C. Contingency Dump Vacuum Pump/Trap Sets
D. Process UPS systems
E. Diesel fuel tank pump motors for the Standby Diesel Generators
F. Air compressor and dryer for instrument air
G. Fan motors and dampers in the Pumped Extract GEVS
H. Power outlets for mobile pump sets
I. Air conditioning units for the CUB and CRDB

Process UPS / No Break Loads

The following equipment is supplied power from the Process UPS/no break power distribution system described in Section 3.5.2.2:

A. Plant Control System
B. Process Instruments.
C. Dampers in the Pumped Extract GEVS

Support Systems UPS / No Break Loads

The following equipment is supplied power from individual UPS units located, sized and equipped with batteries meeting the requirements of the equipment supplied or UPS units backed up by power from a diesel generator.

A. Emergency Lighting
B. Site Communications System
C. Environmental Monitoring.

3.5.2.4.1 Routine Operations

3.5.2.4.1.1 115 kV - 13 kV Utility Substation

Under normal circumstances both 115 kV incoming lines are in service, synchronized and connected together supplying both 115 -13 kV transformers. Both 115 -13 kV transformers and both 13 kV breakers are in service with each supplying approximately one half the facility load.

The 115-13 kV transformers automatic LTC equipment monitors and maintains the required supply voltage.

3.5.2.4.1.2 13 kV Distribution System

The 13 kV visible blade disconnect switches A and B are normally closed.

Utility 115 -13 kV transformer A is normally connected to the facility 13 kV switchgear bus A and utility 115 -13 kV transformer B is normally connected to the facility 13 kV switchgear bus B.

The tie breaker between 13 kV switchgear bus A and 13 kV switchgear bus B is normally open.

Each 13 kV site distribution feeder circuit is supplied from a breaker either on bus A or bus B. An alternate feed circuit is available from a pre-wired breaker space in the other bus when a spare breaker is installed.

The Electrical System is monitored in the Control Room by the Plant Control System to which all alarm conditions and status indications are transmitted.

3.5.2.4.1.3 Plant 480/460 V Distribution System

The 480/460 V power is derived from the 13 kV system through the 13 kV-480/460 V step-down transformers and is distributed through 480/460 V power distribution equipment. All step-down transformers are normally in service.

The normal load system 480/460 V switchgear is run with all normal supply breakers closed and all alternate supply breakers open. Where selection switches are provided, loads are selected to the A or B system to achieve load balance.

SBM Normal and Low voltage buses associated with the variable frequency drive system are 430V. Bus supply transformers are 13.8KV – 430V.

The short break load 480/460 V switchgear is run with the circuit breakers from transformer A to switchgear A and transformer B to switchgear B closed and with the circuit breakers from transformer A to switchgear B and transformer B to switchgear A open. Breakers on both generators to the respective switchgear are normally open. Sub-distribution equipment is operated with incoming breakers closed. Where sub-distribution selection switches are provided, load is selected to the A or B system to achieve load balance.

3.5.2.4.1.4 Standby Diesel Generators

Under normal circumstances, the Standby Generators are each in a passive state with each diesel generator selected to run in the event of a power supply failure to the switchgear bus to which it is connected.

3.5.2.4.1.5 UPS Systems

Under normal circumstances the UPS units are in service supplying the UPS/no break loads and maintaining the UPS batteries in a fully charged state.

3.5.2.4.2 Non-Routine Operations

3.5.2.4.2.1 115 kV - 13 kV Utility Substation

Each 115 kV line is protected by sensitive high-speed fault detection equipment for both phase and ground faults. If a line fault occurs, the affected line is removed from service by opening the associated circuit breakers. The un-affected line will supply the total power required until the faulted line is restored.

The main 115-13 kV transformers are also equipped with sensitive high speed fault detection equipment. If a fault occurs in a 115-13 kV main transformer, the protective relays isolate the transformer by tripping 115 kV and 13 kV circuit breakers. This results in the loss of the affected supply until the repair or replacement of the transformer is carried out. Complete site service is restored by isolating the faulty transformer and closing the tie breaker to align both 13 kV switchgears to the unaffected transformer supply.

In the event of an electrical fault occurring in one of the 13 kV circuit breaker outgoing cables, the fault again is detected and isolated by the protective devices. As with the loss of a transformer, the affected supply is lost until repairs are made, in the event of an electrical fault occurring in one of the 13 kV circuit breakers, the supply may be lost until repairs are made or a spare circuit breaker may be installed the other bus to provide an alternate supply..

The loss of one 115 kV line does not interrupt the facility power supply.

The loss of one main transformer, or one 13 kV breaker or one main outgoing cable would interrupt approximately one half of the site load until switching restores service.

3.5.2.4.2.2 13 kV Distribution System

Each of the main incoming cables from the 115-13 kV main transformers, each of the duplicate 13 kV switchgears, each of the 13 kV feeder cables and each of the step-down transformers are protected by sensitive high speed fault detection equipment.

In the event of an electrical fault occurring in either of the 13 kV switchgear lineups, the protective devices will automatically de-energize the affected portion of the equipment. This fault would result in loss of supply to equipment served from the faulted area until repairs are completed.

Each outgoing feeder circuit breaker is equipped with an overcurrent and ground fault protective scheme. In the event of an electrical fault occurring on the feeder, the circuit breaker will trip. This results in the loss of supplies to only the load center step-down transformer that is connected to this circuit.

In the event of a fault occurring in a 13 kV primary voltage load center step-down transformer, the fault is detected, and the transformer is removed from service by protective devices on the dedicated 13 kV feeder that supplies the transformer.

3.5.2.4.2.3 Plant 480/460 V Distribution System

In the event of an electrical fault occurring on a 13 kV-480/460 V or a 13.8KV – 430V step-down transformer, the fault is isolated by the feeder circuit protection systems. This results in the loss of supply until the necessary corrective action is taken.

In the particular case of the normal load switchgear, faults in this equipment are isolated by the automatic action of protective devices, and power is lost to the equipment served until repairs can be made or selectable loads are switched to their alternate supply.

In the particular case of the short break load, switchgear loss of the normal supply will cause the associated Standby Diesel Generator to automatically start and restore power. Faults in this equipment are isolated by the automatic action of protective devices, and power is lost to the equipment served until repairs can be made or selectable loads are switched to their alternate supply.

3.5.2.4.2.4 Standby Diesel Generators

In the event of a loss of power to the switchgear where a Standby Diesel Generator is connected, the Standby Diesel Generator will automatically start and supply power to the connected short break loads.

After restoring of the normal power supply, the system is manually switched back to the normal source and the Standby Diesel Generator is restored to standby service.

3.5.2.4.2.5 UPS Systems

In the event of a loss of input power to a UPS unit, the batteries will automatically supply power to maintain the UPS/no break loads without interruption.

When normal input power is restored, the batteries cease supplying output power and will automatically recharge. The UPS unit will continue to supply the UPS/no break loads without interruption.

The failure of a UPS unit will initiate automatic transfer of the unit's load to UPS input power supply without interruption. When the UPS unit is repaired and restored to service, the load is synchronized and manually switched back to the UPS without interruption.

3.5.2.5 Safety Considerations

Failure of the Electrical System will not endanger the health and safety of the public. Nevertheless, redundancy is provided in the system for reliability and to provide for investment protection.

The Electrical System is designed to minimize the combustible content of the equipment and the wiring. Transformers are dry type, and wiring is low flammability rated.

3.5.3 Compressed Air System

3.5.3.1 System Description

The Compressed Air System provides "instrument air quality" compressed air at 7 barg (102 psig) for use in instruments, controls, and equipment in the SBM, CUB, CRDB, and TSB. Additional, smaller compressors are located in the CAB to provide compressed air to specific equipment within these buildings. Compressed air is used to actuate pneumatic instruments and control valves, to operate pneumatic tools and for maintenance activities.

The system consists of two, packaged, air-cooled compressed air units; two air filter/dryer units; two instrument air receivers; and associated instrumentation and distribution piping. The system is illustrated in Figure 3.5-14, Process Flow Diagram Compressed Air System, Sheet 1 and Process Flow Diagram, Compressed Air Distribution, Sheet 2. The functional requirements of the Compressed Air System are provided in Table 3.5-2, Compressed Air System Design Parameters. The major components of the Compressed Air System are located in the Air Compressor Room of the Central Utilities Building (See Figure 3.3-16).

The compressor is cooled by filtered outside air. Process air is taken from inside the building, filtered, compressed, and cooled prior to drying. A filter/dryer unit removes moisture and particulates to meet instrument air specifications. Two instrument air receivers act as surge vessels and provide a reserve supply of air in the event of an upset condition.

The instrument air operating pressure is established to meet the air supply pressure required to operate UF_6 valves. System surge capacity is based on supplying instrument air to all valves in UF_6 service for six operational cycles within a period of one minute at a supply pressure of 7 barg (102 psig). Service to plant air users and HVAC instruments is discontinued during operational upsets.

The CAB Compressed Air System provides "instrument air quality" compressed air for use in instruments, controls, and equipment in the CAB.

3.5.3.2 Major Components

The major components and design parameters are listed below.

A. Air compressor packaged units

There are two air compressor packaged units each sized to provide the total amount of plant and instrument air required in the SBMs, CRDB, TSB, and CUB. The CAB has a separate compressed air system. Each packaged unit consists of an air compressor, inlet air filter/silencer, precooler, aftercooler, intercooler, moisture separators (after each cooler), and an oil separator.

B. Air filter/dryer units

There are two air filter/dryer units each sized to dry and filter the design quantity of compressed air to -40°C (-40°F) dewpoint. The duplex dryer is designed to provide continuous service and automatic regeneration. Each unit consists of an air prefilter, desiccant dryer, and an air afterfilter.

C. Instrument air receivers

There are two instrument air receivers each sized to provide the design quantity of instrument air to process valve operators at the required supply pressure for six operational cycles within a period of one minute after failure of both air compressors.

D. Breathing Air Compressor (CRDB)

This compressor train provides CGS grade D quality breathing air to personnel in various CRDB areas. This compressor has no backup. The compressor will be equipped with associated filters, coolers and appurtenances.

E. After Cooler (trim cooler for CUB compressors)

There are two aftercoolers provided, on for each CUB compressor discharge. These are trim coolers (separate from the packaged aftercoolers) designed to cool the compressed air to approximately 100 °F at the maximum discharge and room temperature/relative humidity. These coolers are not required for operation but provide additional margin for extreme high temperature conditions.

F. CAB Air Compressor Packages Units

There are two compressor rooms located in the CAB. One compressor room located in the second floor of the Office Area supplies the majority of the CAB air systems. A separate compressor room is located on the South side of the CAB and primarily serves Centrifuge Assembly Area C. Each compressor room contains two packaged air compressor units consisting of an air compressor, inlet air filter/silencer, after-cooler, moisture separators, and an oil separator.

G. CAB Air Filter/Dryer Units

Each CAB compressor room contains two air filter/dryer units each sized to dry and filter the design quality of compressed air to -40°C (-40°F) dew point. The duplex dryer is designed to provide continuous service and automatic regeneration. Each unit consists of an air pre-filter, desiccant dryer, and an air after-filter.

H. CAB Instrument Air Receivers

Each CAB compressor room contains one instrument air receiver sized to provide the design quality of instrument air to the CAB.

3.5.3.3 System Interfaces

The compressed air system interfaces with the following facility systems.

A. The HVAC System supplies cooling air to the air compressor package units

B. The Electrical System supplies power to operate the compressor motors, dryer, heater, lighting, and instrumentation.

C. The Standby Diesel Generator System supplies power to the compressor package units in case of primary power interruption.

3.5.3.4 Operational Characteristics

The CUB Compressed Air System is normally operating and is designed to provide uninterrupted operation. The CAB air compressors are not supplied with standby power.

3.5.3.4.1 Routine Operation

The Compressed Air System is designed to provide a reliable and continuous supply of compressed air for plant and instrument use. During normal operation, both compressors operate at partial load. The system is designed to automatically respond to changes in instrument air demand by adjustment of compressor operating capacity. The functional requirements of the Compressed Air System are provided in Table 3.5-2.

At design conditions, outside air provides the cooling air while room air, separate from the cooling air flow, is drawn through the compressor inlet air filter/silencer. Actual rate of air intake depends on system air demand and is adjusted by the packaged unit capacity controller. The inlet air is, compressed with a rotary screw compressor, and cooled prior to drying in the system filter/dryer unit. Condensed water vapor is collected in moisture separators associated with the compressed air aftercooler. The compressor package unit will contain an oil separator to assure oil-free instrument air. An air cooled trim cooler is provided downstream of the air compressor discharge for additional temperature margin during extreme hot weather conditions.

The compressed air is prefiltered and dried in a duplex self-regenerating desiccant dryer to a dew point of –40°C (-40°F) and is again filtered to prevent desiccant carryover. The flow of dried instrument air is split between two instrument air receivers. Critical and non-critical instrument air is distributed through ring headers in each SBM at 13 barg (188.5 psig) pressure. Pressure regulating valves in each SBM reduce the operating pressure to 7 barg (102 psig) for distribution to users.

3.5.3.4.2 Non-Routine Operation

The Compressed Air System is designed with equipment redundancy to ensure continuous operation. If mechanical repairs are required on an air compressor packaged unit, the unit is isolated and the other unit continues to operate. The drying unit also has a spare, and one unit may be isolated to perform maintenance, repairs, or desiccant replacement during normal operation.

The consequences of potential failure modes are discussed below:

A. Failure of the system pressure controller may result in both compressors operating at full capacity. Safety relief valves will vent the excess air to the atmosphere. Alternatively, the failure may result in insufficient air supply. In either case, high pressure alarms or low pressure alarms alert the operators to the upset condition.

B. Failure of the moisture analyzer on the air dryers may delay switchover of operation to a regenerated dryer and allow air to enter the system above the –40°C (-40°F) dew point. A redundant moisture analyzer will actuate alarms to alert the operators of the upset condition.

C. System surge capacity is based on supplying instrument air to all valves in UF_6 service for six operational cycles within a period of one minute at a supply pressure of 7 barg (102 psig). This capacity is estimated to be 100 m^3.

D. The Compressed Air System is supplied by backup power from the Standby Diesel Generator System. It remains in operation during interruption of the primary power supply.

E. Operation of a compressor in a blocked-in state results in excessive pressure. Pressure safety valves and alarms protect the system piping and equipment in the event that this occurs.

Failure of the HVAC cooling will result in air compressor shutdown which will result in shut down of the activities relying on compressed air.

3.5.3.5 Safety Considerations

Failures of these compressed air systems cannot endanger the health and safety of the plant personnel or the public. Nevertheless, special design and operating features enhance public safety and worker safety. The systems have been designed with component redundancy and backup power supply as described above. These provisions contribute to public and worker safety by increasing the reliability of instrument air supply and thereby decreasing the probability of UF_6 process system upset.

3.5.4 Water Supply

3.5.4.1 Process Water System

3.5.4.1.1 System Description

The Process Water System provides water to users throughout the facility. Process water refers to potable water that has passed through a backflow preventer upon entrance to the facility. Potable water is water that comes from a city water system. Water from the city water system is provided at a reliable pressure adequate to serve facility requirements. The system flow diagram is shown in Figure 3.5-15, Process Flow Diagram, Process Water Distribution System. The average daily water consumption of the NEF is provided in Table 3.5-3, Average Water Consumption.

3.5.4.1.2 Major Components

The Process Water System consists of one electric water heater, associated piping, valves, and instrumentation. The system also includes three 946350 L (250000 gal) storage tanks. One Process Water Storage Tank provides the normal supply to the Process Water system. Two Fire and Process Water Storage Tanks are capable of supplying the Process Water system if the Process Water Storage tank is unavailable. The bottom of each Fire and Process Water Storage Tank is used for fire water storage. The piping is connected so that it is impossible to use dedicated fire water for process water. Additional equipment includes one process water pump with a 100% spare and associated piping, valves, and instrumentation.

3.5.4.1.3 System Interfaces

The Process Water System interfaces with the following systems.

A. The Process Water System provides water to the Centrifuge Cooling Water Systems after being processed by a water purification system.
B. The Process Water System provides water to the standby diesel generator cooling systems after being processed by a water purification system.
C. The Process Water System supplies the Decontamination System, the Liquid Effluent Collection and Treatment System (general washdown and tank flushing), various wash-down areas, and yard and construction services.
D. The Electrical System provides power for the electric water heaters.

3.5.4.1.4 Operational Characteristics

A major piping failure in the Process Water System would not affect essential services. The Centrifuge Cooling Water System and the Fire Water System have sufficient storage capacity to perform basic functions without receiving makeup water from the city water system for up to 48 hours.

3.5.4.1.5 Safety Considerations

Failure of this system does not endanger the health and safety of the plant personnel or the public. A sufficient storage capacity is provided for all essential users such that failure of the Process Water System would not affect the performance of essential services over a reasonable period of time.

3.5.4.2 Domestic Water System

3.5.4.2.1 System Description

The Domestic Water System provides chemically treated water from a reliable water source to users throughout the facility.

3.5.4.2.2 Major Components

The system consists of a 189,270 L (50,000 gal) storage tank and a flow distribution network. Prior to the completion of the domestic water softner and treatment package, the users in the CAB will be supplied directly from the city water supply.

Local electric heaters provide heated domestic water to various plant users such as restrooms, showers, and service sinks.

3.5.4.2.3 System Interfaces

The Domestic Water System interfaces with the Sewage System, the Process Water System, and the Fire Water System. The Sewage System receives domestic water that is not consumed. However, domestic water that is potentially contaminated drains to the Liquid Effluent Collection and Treatment System.

The Domestic Water System provides chemically-treated water to the following users.

A. SBMs. Restrooms, service sinks, drinking fountains, emergency showers, and eyewash stations
B. CAB. Restrooms, service sinks, canteen, drinking fountains, eyewash stations, and emergency showers
C. CRDB. Service sinks, and laboratory emergency showers
D. TSB. Restrooms, break room, service sinks, drinking fountains, laboratory emergency showers, and eyewash stations
E. Administration Building and Security Building. Restrooms, service sinks, canteen, and drinking fountains
F. CUB. Restroom, service sink, drinking fountain, emergency shower, and eyewash stations.

G. HVAC Humidifiers in building areas where required.

3.5.4.2.4 Operational Characteristics

Domestic water is available for use on demand. The use of domestic water is intermittent, and there are no continuous users. The only control function performed by the system is thermostatic control of the electric water heaters.

3.5.4.2.5 Safety Considerations

Failure of this system does not endanger the health and safety of the plant personnel or the public.

3.5.4.3 Potable Water System

Potable water is water provided to the site from a municipal utility source at a reliable pressure adequate to serve facility requirements. The system consists of backflow preventers, a heated enclosure, a meter pit and a piping network that supplies water for the 50,000 gal domestic water storage tank and three (3) 250,000 gal storage tanks used for fire water suppression and process water.

3.5.5 Cooling Water Systems

3.5.5.1 (See SAR § 12.2.3.1) Centrifuge Cooling Water System

The Centrifuge Cooling Water System (CCWS) provides cooling water to the centrifuge cooling jacket coils, thus maintaining the required centrifuge operating temperatures necessary for efficient isotope separation.

3.5.5.1.1 System Description

The Centrifuge Cooling Water System (CCWS) consists of multiple closed cell cooling towers that discharge excess process heat to the atmosphere through a combination of multiple cooling towers. Other components of the loop include tower water pumps and an expansion tank. In addition, a heat exchanger cooled by two air cooled chillers is available to provide additional cooling during periods of peak heat loads. The cooling tower water loop delivers cooling water to the Centrifuge Cooling Water Distribution System. A supplemental cooling supply (plate and frame heat exchanger located in the CUB) is provided to augment the normal cooling water from the towers during extreme hot weather conditions.

The Centrifuge Cooling Water System is illustrated on Figure 3.5-17, Process Flow Diagram Centrifuge Cooling Water System Towers, Pumps and Distribution System.

The Centrifuge Cooling Water System provides 28.0°C (82.5°F) cooling tower water to the Centrifuge Cooling Water Distribution System.

Expansion tanks in the cooling tower water return line are provided to accommodate liquid expansion in the system. System equipment and distribution piping are insulated to limit heat gains.

To remove ionic and particulate material from the CCWS, a Sidestream Water Polishing System is utilized. This system bypasses and polishes approximately 10 % of the total CCWS flow. The polished flow is then returned to the main CCSW water stream.

3.5.5.1.2 Major Components

A. Centrifuge cooling water pumps. The number and size of centrifuge cooling water pumps are sufficient to provide 100% flow through each of the towers.
B. Cooling tower. The cooling towers are sized to meet 100% of the total system duty with spare capacity.
C. Cooling tower water expansion tanks. The expansion tanks are sized to accommodate the expansion of water in the system over the temperature range of 4.4°C to 37.8°C (40°F to 100°F) and to accommodate leakage from the system.
D. Supplemental Cooling Source. This equipment is provided to temper the centrifuge cooling water during extreme hot and humid weather.
E. Sidestream Water Polishing System. To remove ionic and particulate material from the CCWS, this system bypassing and polishing approximately 10% of the total CCWS flow. The polished flow is then returned to the main CCWS water stream.

All components of the Centrifuge Cooling Water System, except the cooling towers are located in the CUB. The cooling towers are located outside the CUB.

3.5.5.1.3 System Interfaces

The Centrifuge Cooling Water System interacts with the following plant systems.

A. The Centrifuge Cooling Water Distribution System is supplied with 28.0°C (82.5°F) cooling tower water.
B. The Compressed Air System supplies instrument air to actuate the cooling tower water system control valves and instruments.
C. The Process Water System supplies makeup water to the centrifuge cooling tower water basins.
D. The Process Water System, after being processed by a water purification system, supplies makeup water to the Centrifuge Cooling Water System.
E. The Electrical System supplies power to operate the air cooled chillers, cooling towers, primary and secondary water pumps, condenser water pumps, lighting, and instrumentation.
F. Supplemental cooling will be supplied to augment the normal cooling water from the towers during extreme hot weather conditions.

3.5.5.1.4 Operational Characteristics

During normal operation, the Centrifuge Cooling Water System provides a continuous supply of cooling tower water to process centrifuge users. The temperature of the cooling tower water is maintained at 28.0°C (82.5°F).

3.5.5.1.4.1 Routine Operation

The cooling tower water supply temperature is maintained at 28.0°C (82.5°F). Multiple towers are provided to accommodate fluctuating process cooling loads. In addition, a heat exchanger cooled by two air cooled chillers is available to provide additional cooling during periods of peak heat loads.

3.5.5.1.4.2 Non-routine Operation

The Centrifuge Cooling Water System is designed with redundancy to provide maximum reliability. The consequences of potential failure modes are discussed below.

A. Equipment Failure. All equipment in this system, except the cooling tower water expansion tank, is provided with redundancy. In the event of equipment failure, spare equipment is placed into service. If the expansion tank develops a leak, the vessel is bypassed while the leak is repaired. The multiple towers permit maintenance on up to 3 towers at a time. The others remain in service, providing 100% of the process centrifuge cooling needs.

B. Instrumentation Failure. All instruments and control valves are designed to fail in a safe position. Control valves may be isolated and bypassed for maintenance.

C. Instrument Air Failure. All control valves and instruments that operate on instrument air will fail to a safe position in the event of instrument air failure.

D. Power Failure. All equipment in this system will shutdown in the event of power failure.

E. Operator Error. If a cooling tower water pump is operated with a closed discharge valve, a low flow switch is provided in the pump discharge line to trip the pump. If an operator erroneously shuts down a cooling tower, a high cooling tower water temperature alarm is initiated.

3.5.5.1.5 Safety Considerations

Failure of this system does not endanger the health and safety of the plant personnel or the public. Redundancy is provided for all major components to enhance the reliability of the system.

3.5.5.2 Centrifuge Cooling Water Distribution System

3.5.5.2.1 System Description

The Centrifuge Cooling Water Distribution System is located in the Process Services Corridor (PSC) in each Separations Building Module (SBM). The Centrifuge Cooling Water Distribution System supplies DI cooling water to the centrifuge cooling jackets in each cascade, maintaining the required operating temperature and ensuring efficient isotope separation during uranium enrichment. The system is shown on Figure 3.5-17, Process Flow Diagram Centrifuge Cooling Water System Towers, Pumps and Distribution System. The functional requirements of the Centrifuge Cooling Water Distribution System are provided in Table 3.5-7, Centrifuge Cooling Water Distribution System Design Parameters.

The Centrifuge Cooling Water Distribution System consists of similar equipment in each SBM and includes piping, instrumentation, and controls. The cascade circulation pumps are located in the PSC adjacent to the respective cascade that they service. There is one operating pump and one spare pump per cascade per SBM. During normal operation, centrifuge cooling water is cooled by the Centrifuge Cooling Water Distribution System and is circulated through the centrifuge cooling jackets in each cascade.

The primary functional requirement of the Centrifuge Cooling Water Distribution System is to provide a heat sink for the heat load produced by centrifuges in each SBM. Additionally, since the plant will be brought online incrementally the cooling towers may not be utilized for First Cascade Online. A bypass line has been installed to isolate the cooling towers at this point and allowing the chiller units associated with the Centrifuge Cooling Water System to provide the initial cooling. When the cooling towers become available or the heat load of the enrichment plant is high enough so that the cooling towers will be necessary the Centrifuge Cooling Water System will be lined up to direct flow through the cooling towers.

CCWS initial fill may be accomplished by using an outside source via, tanker truck rather than DI system. Hose connection with 6" isolation valve is provided for this purpose. The system is normally filled with DI water from a water purification System.

3.5.5.2.2 Major Components

A. Cascade circulation pumps. The cascade circulation pumps are sized to provide sufficient flow to each cascade to meet heat removal requirements.

Materials of construction are selected to be compatible with the highly corrosive DI water and with the aluminum cascade cooling coils.

3.5.5.2.3 System Interfaces

The Centrifuge Cooling Water Distribution System interfaces with the following plant systems:

A. Centrifuge cooling water is supplied to the Cascades.
B. The Centrifuge Cooling Water System supplies process cooling water used to cool the Centrifuge Cooling Water Distribution System.
C. The Process Water System, after being processed by a water purification system, supplies make up DI water to the Centrifuge Cooling Water Distribution System.
D. The Compressed Air System supplies instrument air to actuate instruments and control valves in the Centrifuge Cooling Water Distribution System.
E. The Electrical System provides power to operate cascade circulation pumps and instrumentation.

3.5.5.2.4 Operating Characteristics

This system operates continuously and is designed to provide highly reliable operation. In the event the UF_6 flow through a centrifuge or cascade is interrupted, the Centrifuge Cooling Water Distribution System continues operating without need for shutdown.

3.5.5.2.4.1 Routine Operation

This system is designed to provide high reliability and operate continuously to remove heat from the centrifuges. The system operates within a tightly controlled temperature range. Temperatures are closely regulated to ensure the efficiency of isotope separation.

The flow is split evenly between the two cascade halls in each Separations Building Module, and then again among the centrifuge cascades in each cascade hall.

3.5.5.2.4.2 Non-routine Operation

The Centrifuge Cooling Water Distribution System is designed with redundancy of components to provide maximum reliability. The consequences of projected potential failure modes are discussed below.

A. Equipment Failure. This system is designed with a high degree of equipment redundancy to ensure continuous operation.
B. Instrumentation Failure. Failure of the temperature control instrumentation in the cascade area could result in under or over-cooling of the centrifuges, which has no safety impact.
C. Instrument Air Failure. All control valves and instruments that operate on instrument air will fail in a safe position in the event of instrument air failure.
D. Cooling Water Failure. Failure of the cooling water supply to the centrifuges would cause the cooling water temperature to rise.
E. Power Failure. All equipment in this system will shutdown in the event of power failure.
F. Operator Error. Extended operation of any pump in a blocked-in or dry condition could result in damage and potential failure of the pump. The resultant pump failure could result in under-cooling of the centrifuges.

3.5.5.2.5 Safety Considerations

Failure of this system will not endanger the health and safety of the facility personnel or the public. Active components are redundant throughout the system for maximum reliability.

3.5.6 Sewage System

3.5.6.1 System Description

Sanitary waste water will be sent to the City of Eunice Wastewater Treatment Plant via a system of lift stations and 8 inch sewage lines.

Six septic tanks, each with one or more leach fields, may be installed as a backup to the sanitary waste system. The Septic System is designed to treat, collect, and transport all domestic sewage generated at the NEF. The septic system is capable of handling approximately 40,125 L (10,600 gal) per day.

The system includes multiple septic tanks and drain fields. Septic tanks may be located at the Security Building, at the Administration Building, and at other places in the facility where a concentration of toilets exist.

3.5.6.2 Safety Considerations

Failure of this system does not endanger the health and safety of the plant personnel or the public.

3.5.7 Communication and Alarm Annunciation Systems

The Communication and Alarm Annunciation System is designed to provide reliable intra-facility and facility-to-offsite communications, as well as offsite emergency communications with public emergency response agencies.

3.5.7.1 Communication Systems Description

The primary communication systems at the facility are the facility telephone system and the two-way radio system.

3.5.7.1.1 Facility Telephone System

This system, which is permanently connected to the commercial telephone system, is the normal means of communications between local law enforcement authorities, public emergency response agencies and the facility.

The system is a conventional landline based private business exchange (PBX) telephone system that has a central switchboard. The system is a state of the art digital facility with the capabilities to offer special features in addition to basic telephone service such as; call tracing or call recording.

A sufficient quantity of telephones are located strategically to allow facility personnel easy access to telephones from all facility locations.

The telephone lines enter the facility and interface with the site network in the main communications room located on the first floor of the Administration Building. The commercial telephone lines are terminated on protectors located in the communications room and extended to telephones located throughout the facility. The site lines leave the room through underground conduit to communication rooms located throughout the facility.

3.5.7.1.2 Two-way Radio System

This system, which can be connected with local law enforcement or other agencies during emergencies, is the primary communications system for the site security services.

This form of communication consists of radio base stations, mobile radios and handheld radios. Radio base stations are placed in the Central Alarm Station (CAS) and Security's Secondary Alarm Station (SAS). The radios have multiple channels, one of which is dedicated entirely to security.

Two-way radio communication is used by site security or by other personnel when the facility telephones are not accessible.

Two-way radios are not normally used within the SBMs because radio interference from these systems can adversely affect the operation of plant control systems. During emergencies, however, their use is unrestricted.

Radio signals may be sent via a centrally located radio tower or radio towers distributed throughout the facility.

The radio base stations are in separate locations so that it is unlikely that a fault would take the system out of service. Therefore, a reliable communication both on and off site is present at all times whether the plant is experiencing a normal or abnormal situation.

The radio base stations are powered by diesel-backed AC sources and remain operative following loss of offsite power.

Radio communications use the appropriate FCC licensed radio frequencies for the plant.

The communication systems are designed to provide appropriate redundancy so that a single failure in one system will not leave the facility without communication capability.

The design also permits continuous communications between the Control Room, the CAS, the SAS, and security personnel on duty at the facility.

In the event of a failure of the facility telephone system, voice paging and direct conversation can be accomplished by the use of two-way radio.

Direct voice communication within the facility is handled by the facility telephone system using extension telephones with direct dialing between extensions.

Facility personnel may be paged through the public address (PA) system from a base station located in the Administration Building, the CAS, or the SAS. The Control Room operator also has direct access to the system from a third PA system base station in the Control Room. During emergencies the use of the CAS or the SAS, base station overrides the normal Administration Building paging operation.

3.5.7.1.3 Alarm Annunciation System

Facility alarm systems which provide security, safety and environmental protection such as fire alarm, radiation monitoring, gas release, equipment failure, etc. all provide audio and visual annunciation in either the Control Room, CAS, or SAS. Control Room and/or security personnel will respond to the alarm condition directly and if applicable annunciate the condition over the PA system.

The PA system is tied into the phone system through a designated access number. The PBX has an override function that when the PA system is being accessed through the designated access number, voice communication will stop and a prerecorded alarm will sound. The prerecorded alarm is used to indicate an emergency situation such as a fire, an injury, or site evacuation. An alarm will sound and be followed immediately with a message giving directions over the PA system. The Control Room base station has complete control of the system and is able to switch the alarm off and give a voice message or initiate a prerecorded message. If the PA system is inoperable, two-way radios or telephones can be used.

Speakers are strategically located around the site both inside and outside so that personnel at most locations on the site can be clearly notified of an event. The PA system is designed so that during a single failure the system will still allow alarms to be annunciated. The PA system allows communication to people in remote areas of the facility where telephones are not accessible.

3.5.7.2 System Interfaces

The facility telephone system ties in with the local telephone company. The Communication and Alarm Annunciation Systems are powered by the Electrical System.

3.5.7.3 Major Components

The following items are provided as part of the Communication and Alarms System:

A. Facility Telephones. Telephones are fixed wall mounted or desktop style.

B. Two-way Radio (Portable). The portable two-way radio is hand held and has multi-channel capability. The radio signal is strong enough such that anyone can be contacted on site.

C. Two-way Radio (Mobile). The mobile two-way radio is mounted in vehicles on an extra stable mount. It is capable of multi-channel communication. The radio signal is strong enough to reach all areas of the facility from any point within the facility and communicate with offsite emergency agencies.

D. Radio Base Station. The radio base station is a desktop model with multi-channel capability. The range extends to the hospital, fire department, and law enforcement even under the worst possible environmental conditions.

3.5.7.4 Operational Characteristics

3.5.7.4.1 Routine Operation

During normal operation, the site communication system provides facility telephone, radio, PA, and alarms for operation, security and administration communication.

3.5.7.4.2 Non-routine Operation

During off-normal operation, the site communication system provides telephone, PA, radio, and alarms for response to abnormal process operation, hazards (fire, chemical and radiological) and security events. The communication system aids in the following:

A. The evacuation of personnel from the site or buildings

B. The actuation of appropriate systems and components

C. The identification of a need for containment of a hazard and appropriate measures to be taken

D. Notification of local law enforcement of an event

E. Communicating the need for fire fighting, medical, or security assistance.

3.5.7.5 Safety Considerations

Failure of the Communication and Alarm Annunciation Systems would not endanger public health and safety. Nevertheless, the Communication and Alarm Annunciation Systems are designed with redundant devices for emergency communications, as described above. Backup power is supplied to essential devices to assure communications during abnormal conditions.

3.5.8 Not Used

3.5.9 Control Systems

3.5.9.1 Functional Requirements

The Plant Control System (PCS) performs the following functions:

- Provide asset protection
- Enable operators to supervise and control all enrichment plant operations
- Control and protect the enrichment process
- Provide local operators with facilities to enable preparation of the enrichment process
- Provide a supervisory interface for auxiliary systems
- Provide historical data for analysis.

The detailed instrumentation needed to achieve the functionality identified above is included in the process system descriptions (Section 3.4 Enrichment and other Process Descriptions).

Facility control and monitoring systems are designed to handle abnormal levels of data and alarms that may occur during upset and emergency conditions. The Control Room is designed to accommodate equipment to monitor, alarm, and record environmental, effluent, and fire protection data.

All process instrumentation specified has been qualified for use in uranium enrichment plants.

3.5.9.2 System Description

The PCS is designed to accommodate full separation plant operation. The system is configured to enable integration using standard control technology together with connected, but separate, protection systems that provide the required level of protection.

The PCS includes the following:

- Central Control System (CCS), including SCADA, Servers, Operator Stations, Overview Screens and Communications Networks
- Local Control Systems (LCS), including Programmable Logic Controllers (PLC) and Local Operator Interface
- Interfaces to process equipment and Auxiliary Systems
- Training System
- Process Instrumentation and Wiring.

3.5.9.2.1 Central Control System

The Central Control System (CCS) is the top-level supervisory system. It is computer-based and consists of the Supervisory Control and Data Acquisition (SCADA) System, redundant server system, fiber and copper networks, operator workstations and overview screens. The core of the CCS is located in the Control Room with network expansion throughout the facility connecting each LCS. A pictorial representation of the CCS is shown in Figure 3.5-18, Plant Control System Central Control System, Sheet 1 of 3.

The purpose of the CCS is to:

A. Enable the minimum number of operators to carry out remote operation of the process.
B. Provide operators and maintenance personnel with information about the status of the equipment in the facility.
C. To allow remote Control Room operation of some frequently required operations, e.g., changing the state of a feed station.
D. Provide alarms for the operators in case of abnormal events so that action can be taken to prevent an interruption of the process.
E. Provide real-time and historical data storage to allow analysis of:
    - Facility performance
    - Post event protection actions
    - Comparison between historical and real-time events.

The CCS architecture is configured such that no single failure will prevent the operators from controlling and monitoring the process. The level of CCS redundancy in terms of operator stations, servers, communication modules and networks provides a high availability of the system for monitoring and supervisory control.

The CCS provides supervisory monitoring and control as its primary function. Process protection, and protection of workers, the environment, and the public is implemented locally by facility equipment.

The SCADA system, which is implemented as part of the CCS, provides the operator with a complete visual interface to the plant. Facility mimics, overviews, trends, alarms, events, and control functionality is provided for the operator.

Facility visualization is provided through the facility overview screen or the operator workstations. The operator interface is organized in hierarchical levels to reduce duplication and complexity and minimize operator response time.

As a minimum a four level password security system is provided to manage access to the SCADA, providing a range of access from view-only to engineering access for changes to operating parameters.

All facility alarms are shown on the SCADA systems. The principle for alarms and alarm handling is the alarm list is empty and the alarms do not occur during normal operations.Alarms are provided for abnormal operation only. When alarms do occur, they are listed in chronological order, displayed in defined colors and are brought to the operator's attention both audibly and visually. Alarm classes and filtering are provided to increase alarm recognition and improve operator response to alarm conditions.

3.5.9.2.2 Local Control Systems

The Local Control System (LCS) is the process-level control and protection system that includes process instrumentation and Local Control Centers (LCC) installed locally in the process area. Local Operator Interfaces (LOI) are provided for local operator control and monitoring. Each LCC has sufficient functionality to completely operate and protect its associated process system without any CCS intervention. A pictorial representation of the LCS is shown in Figure 3.5-18, Plant Control System Local Control System, Sheets 2 of 3.

The architecture of the LCS follows the unit-architecture of the process facility. Specifically, where operational redundancy of the process system is provided (for example multiple Tails Stations), a dedicated control and protection system is provided (1 LCC per Tails Station).

Remote I/O and Local Area Networks (LANs) are used to communicate the status of process equipment and auxiliary systems with the LCC-mounted PLC systems. The LCS control equipment, software and hardware are designed to maintain the process parameters within the required process control limits during all normal and abnormal operations.

The Local Control Cabinet provides the physical housing accommodating all the necessary equipment for local operator control, automatic control and protection as well as remote monitoring interfaces for a designated process control system. Each Local Control Cabinet provides all the terminations, signal conditioning, power supplies, etc. that are required to interface with the field instrumentation. Field wiring and related installation equipment as well as signal conditioning equipment are reduced to a minimum to ensure the integrity, accuracy and long-term reliability of the system. LCCs consist of the following major components:

A. PLC and hardwired systems to perform the required process control and system protection as well as support the local operator functions. In some cases more than one PLC is provided.
B. Proprietary software specifically designed to operate with the PLC hardware.
C. Redundant process network communication modules make LCC data available to the CCS equipment.
D. Interfaces for LAN or remote I/O allowing the transfer of data between the LCC control equipment and the related process equipment.
E. Local Operator Interface (LOI), where required, to provide the operator with a process visualization, a display of equipment status and operating data, and the facility to transfer control of the related process system from local to remote control.
F. Regulating control valve controllers, where required.
G. Redundant UPS-backed power supplies to ensure that continuous operation of the LCS in all power conditions.

3.5.9.2.3 Control System Interfaces

While the Plant Control System (PCS) provides the primary control for the process areas, there are several specialized monitoring and control systems that interface with and are integrated into the PCS for supervisory monitoring and control, as follows:

A. Centrifuge Monitoring System. This system is a stand-alone, standard system developed by Urenco that provides detailed status conditions of each centrifuge during run-up and normal operation. The system is provided for investment monitoring and equipment protection.

B. Centrifuge Drive System. Each drive system provides power for the centrifuge motors of one cascade, and provides the speed control and status condition to the operator, as well as providing the controls for isolating and connecting the centrifuges to the drive converters.

C. Uranium Hexafluoride Inventory System (HIS). This is a site-based system, providing the operators with information about the current UF_6 situation at the site. The PCS system, through the LCCs, provides data to this system regarding in-process operations.

D. Criticality Accident Alarm System (CAAS). This system is provided to detect and alarm in the unlikely event of a criticality accident. The CAAS is completely stand-alone for safety reasons, but alarm signals are interfaced to the PCS for centralized alarm and event recording purposes. In the SBM cascade halls, the CAAS is utilized for both criticality and fire/general emergency condition evacuation notification. In the unlikely event of a criticality accident, the CAAS uses a criticality tone in the SBM cascade halls and a criticality tone and blue flashing lights in other process areas in initiate area evacuation. For fire/emergency conditions notification, the CAAS utilizes a tone readily discernable from the criticality tone and there are no flashing lights for fire/emergency condition notification in the cascade halls. Due to the high ambient noise level in the SBM cascade halls a PA system is not utilized.

In addition to these specialized systems, there are several auxiliary systems that are interfaced with the PCS, as follows:

- Product Liquid Sampling System
- Fire Protection System (IROFS 37 only)
- Compressed Air System
- Liquid Effluent Collection and Treatment System
- Gaseous Effluent Vent System
- Nitrogen Supply System
- HVAC systems
- Electrical System
- Environmental and Continuous Air Monitoring Systems.

These systems have simple interfaces to the PCS, are supervisory in nature, and are not provided with control interfaces at the LCS level.

In addition to these systems identified above, there are several specific process systems that are stand-alone, self-supporting and self-contained, complete with all wiring and controls:

- Solid Feed Stations
- Product and Tails Pumping Trains
- Low Temperature Take-off Stations
- UF_6 Cold Traps
- UF_6 Cold Trap Heater/Chiller Units
- Vacuum Pump/Chemical Trap Sets.

Each unit has a self-contained control system that provides complete control and protection functionality, fault analysis, and operator interface when required. Protection provided by the process system is designed to be simple, local and direct and totally isolated from the supervisory protection provided by the PCS. The interface between these process systems and the PCS for protection actions is simple and hardwired and always made at the LCS level.

3.5.9.2.4 Training System

The PCS training system is a stand-alone system that replicates the PCS in all operational functions. The system consists of a tutor station; operator station and hardware cabinet that contains equipment that replicates the CSS and LCS systems and PCS networks.

The training system provides two main functions, software testing and commissioning, and operator training. The training system is used to develop both the hardware and software of the PCS from detail design through system acceptance. The system allows the developer to simulate and test all aspects of the process, including controls and interlocks. Also, because the training operator interface is identical to the PCS operator stations, trainees can easily learn how to respond to operational and alarm conditions and quickly acclimate to the on-line PCS.

3.5.9.2.5 Process Instrumentation and Wiring

The instrumentation associated with the PCS is generally limited to the measurement of absolute pressure and temperature as well as control/monitoring of the process by means of control/solenoid valves with associated valve position indication.

The UF_6 process systems generally operate below atmospheric pressure and are monitored by absolute pressure transducers qualified for the process. These instruments have standardized pressure ranges and are provided with process connections that allow in-place calibration to take place. All pressure transducers are connected directly to and are powered by their process associated LCC.

All temperature measurement elements are non-intrusive (surface mount) types that are: Standard RTD PT100, Class-A, and 3-wire minimum. All temperature elements are connected directly to the LCC mounted PLC I/O cards.

The PCS interfaces with two types of process valves, modulating control valves and automatic on/off valves. The modulating control valve is a servo motor driven device that has its own controller mounted within the LCC. The valve controller receives position demand signals from the PCS via the LCC-mounted PLC and positions the valve where demanded, providing position feedback to the PLC. Automatic on/off valves are solenoid-operated valves, with open and closed limit switches for positive feedback to the PLC.

All instruments and control wiring are wired directly back to its associated LCC. To reduce the likelihood of common-mode failures junction boxes and multi-conductor cables are not used. Wherever possible, routing of cables for individual equipment or systems is kept separate.

Conversion of process signals is kept to a minimum with field instrumentation wired directly to PLC inputs and outputs. The PLC inputs and outputs are fully isolated with each instrument and valve signal such that common-mode interference is minimized.

3.5.9.3 Safety Considerations

The Plant Control System (PCS) is designed with these priorities in mind:

- Advise adverse conditions for safety of the public, environment, and facility personnel
- Protection of plant assets
- Production protection (maximize process availability).

Of paramount importance is the design priority given to safety of the public, environment, and facility personnel. The plant process is safe by design, normally operating at sub-atmospheric pressures, and shutdown systems are automatic, with no operator response or intervention required.

The PCS is required for remote operation, production protection and asset protection. Protection is carried out by the local control and protection systems of the individual process equipment. The PCS is not required and not relied upon for the protection of the public or environment; therefore, the PCS is not an IROFS.

PCS design features include:

A. Redundant Hardware and Control Networks. TRedudant CCS operator stations, servers, and networks provides a high level of availability. The architecture is designed in such a way that no single failure will prevent operators from controlling and monitoring the process. CCS subsystems (operator stations, overview screens and servers) are provided with dual power supplies, and the process control network is redundant for maximum availability.

B. Inner/Outer Protection Envelope (Cascades). Each Cascade has a control PLC and and investment protection PLC in the LCC. The control PLC provides normal cascade operating functions, an inner protection "envelope" and the communications interface to the CCS. The protection PLC only has a protection function that provides an outer investment protection "envelope" which sets the cascade to a safe state should the control PLC fail to control and protect within the inner protection envelope. In addition, the two PLCs constantly handshake to ensure they are synchronized. The cascade goes into safe state if the PLCs fail to maintain synchronization.

C. 1 out of 2 Logic. Where required, two instruments are provided for redundancy and process availability. These instruments are wired to separate analog input modules in their respective PLC. If either analog signal exceeds the programmed signal threshold, the software alarms the condition and the program recognizes it as a "tripped" condition and reacts accordingly.

D. 2 out of 3 Logic. Where required, three instruments are provided for redundancy. These instruments are wired to separate analog input modules in their respective PLC. If any one analog signal exceeds the program signal threshold, the software notes the condition, but the program logic ignores the condition. If two signals exceed the threshold the software alarms the condition and the program recognizes it as a "tripped" condition and reacts accordingly.

E. Hardwired, Failsafe 24vdc Digital Bus. Where investment protection instrumentation is wired into a PLC, it is tied together in logic to drive an output, either wired in series or parallel depending on the protection function. These outputs are wired into a hardwired, failsafe 24vdc digital bus that is wired into the protection PLC of the process equipment. If the bus fails to maintain its 24vdc level, due to a failure of the 24vdc power or a failure of the input that drives the output, the process equipment shuts down or goes into a safe state as required. The hardware bus wiring and logic is not considered or intended to be a "safety system" in terms of personnel or environmental safety. It is provided for asset protection only.

F. Operational Refundancy. The architecture of the control system follows the architecture of the process plant. Where operational redundancy is provided, control system redundancy is provided. In this manner, common mode failure is minimized and process availability is maximized.

3.5.10 Standby Diesel Generator System

The Standby Diesel Generator System provides backup 480V power to the NEF during a loss of normal power. The Standby Diesel Generator System is not a requirement for safe operation of the plant and is installed to provide protection of investment only.

3.5.10.1 System Description

The Standby Diesel Generator System is comprised of two, 100% rated generators that supply the total backup power required. The Standby Diesel Generator System is installed in the Central Utilities Building. In the event of normal power failure, the Standby Diesel Generator System maintains plant services that protect the capital investment.

The functional requirement of the Standby Diesel Generator System is to provide backup power within approximately 10 seconds after a normal power interruption. There is sufficient fuel storage capacity to operate the system at rated capacity until the process equipment is run to standstill.

3.5.10.2 Major Components

The following are the major Standby Diesel Generator System components:

A. Diesel Generator Package units with engine, generator, controls, cooling system and diesel fuel day tank with leak containment
B. Diesel Fuel Bulk Storage Tanks with spill and leak detection and containment
C. Diesel Fuel Pumps and Controls
D. Diesel Fuel Hand Pumps.

3.5.10.3 System Interfaces

The Standby Diesel Generator System interfaces with the following plant systems:

A. The Plant Control System (PCS) monitors the status and operation of the Standby Diesel Generator System.

B. The Utility Water System supplies fill and make-up water to the generator cooling system. No make-up water is required by the diesel generators during operation.

C. The Electrical System provides power to maintain the charge on the electrical starter batteries during normal plant operation. This system receives power from the Standby Diesel Generator System during loss of normal power supply.

D. Split-system air conditioning units are provided to cool support equipment for each of the Standby Diesel Generators. These units receive backup power from the respective SDG.

3.5.10.4 Operational Characteristics

This system is designed for high reliability. Each generator normally is in standby mode and operates on an intermittent basis.

3.5.10.4.1 Routine Operation

The switchgear where the generators are connected is normally supplied power through the utility dual service, the site dual power distribution system and dual step-down transformers. If the normal power supply to a generator switchgear is lost a demand for standby power is created. Each affected diesel generator automatically starts-up and restores the power supply within approximately 10 seconds after the demand for standby power. When the normal power supply has been restored to each switchgear, the associated generator is manually shut down and returned to stand-by status.

Periodic operational test runs are conducted on each Standby Diesel Generator System.

The generator diesel fuel day tanks are monitored and maintained at full storage capacity by an automatic fuel supply system.

3.5.10.4.2 Non-routine Operation

A. Equipment Failure. This system is designed with a high degree of equipment redundancy to provide reliable operation. The standby power loads are divided between the two generators to minimize the impact on operations if one generator fails to operate when needed. Redundant diesel fuel tank pumps are used to transfer diesel fuel from the bulk storage tanks to the diesel day tanks. In the event of failure of the normal pumps, hand pumps are provided.

B. Instrument Failure. Failure of a level control instrument on a diesel day tank could result in an inadequate supply of fuel to a standby generator and subsequent generator shutdown.

C. Instrument Air Failure. Failure of instrument air has no impact on this system. Pneumatic operated instrumentation is supplied with control air by the standby generator package units.

D. Operator Error. Operation of any pump in a blocked-in or dry condition may result in damage to the pump. The operational sequence of the standby generators is automatic. If the fuel pumps fail, it is necessary for operators to set up the proper valve positioning and manually operate a hand pump.

3.5.10.5 Safety Considerations

Failure of this system will not endanger the health and safety of the public. Nevertheless, redundancy is provided in the major components for reliability to provide investment protection.

3.5.10.6 Diesel Fuel Spill Control and Leak Detection

Diesel fuel is stored on site in bulk storage tanks and the day tanks of the standby generators. Each of the tanks is provided with a secondary containment in the event of a tank leak or spill.

3.5.11 Nitrogen System

3.5.11.1 System Description

The Nitrogen System provides gaseous and liquid nitrogen to users from a vendor-supplied liquid nitrogen storage tank. The liquid nitrogen storage and distribution system consists of four nitrogen storage tanks located outside, adjacent to the area that they serve. The Nitrogen Systems also provide liquid nitrogen via cryogenic piping to dispensing stations. One dispensing station is located in the TSB/CRDB and one outside of the CAB. Gaseous nitrogen is generated in the nitrogen system and piped throughout the SBM. It is used for line purging, pressure testing, and blanketing equipment in UF_6 service. Prior to the completion of the CAB Liquid Nitrogen package, a temporary supply of gaseous Nitrogen located outside the CAB and liquid Nitrogen Dewars delivered to the CAB will be used to support initial centrifuge manufacturing and testing activities.

The Nitrogen Systems are vendor-supplied packaged systems. Each unit consists of a liquid nitrogen storage vessel, a pressure build-up coil, vaporizers, and associated instrumentation, and cryogenic piping. The system is illustrated in Figure 3.5-19, Process Flow Diagram Nitrogen System. The functional requirements of the Nitrogen System are provided in Table 3.5-8, Nitrogen System Design Parameters.

The functional requirements of the Nitrogen System are to provide a 30-day supply of liquid and gaseous nitrogen to the users.

3.5.11.2 Major Components

The system contains the following equipment:

SBM and TSB/CRDB Nitrogen package units. Each of the liguid nitrogen storage tanks (Vertical, double walled 34069 L (9000 gal)) are sized to supply at least 30 days of nitrogen without refill based on normal operating conditions. Each of the three units consists of the following components:

Centrifuge Assembly Building Nitrogen package unit. The liquid nitrogen storage tank (Vertical, double walled 22712 L (6000 gal)) is sized to supply at least 30 days of nitrogen without refill based on normal operating conditions.

Distribution Piping. Vacuum insulated cryogenic piping is used for the liquid transfer lines. Gaseous nitrogen lines are fabricated from carbon steel or copper.

3.5.11.3 System Interfaces

The Nitrogen System interfaces with the following plant systems.

A. The Cascade System uses gaseous nitrogen for blanketing centrifuges and cascades during construction. Liquid nitrogen is supplied to mobile pump sets.
B. The UF_6 Feed System uses gaseous nitrogen to blanket the insulation box at the UF_6 cold trap unit and purge distribution piping at the feed cylinders.
C. The Product Take-off System uses gaseous nitrogen to blanket the insulation box at the UF_6 cold trap unit and purge distribution piping at the product cylinders.
D. The Tails Take-off System uses gaseous nitrogen to purge distribution piping at the Uranium Byproduct Cylinders (UBCs).
E. The Product Liquid Sampling System uses gaseous nitrogen to purge the sample manifold in each Product Liquid Sampling Autoclave. The Product Liquid Sampling Autoclaves are also pressurized with gaseous nitrogen.
F. Nitrogen is also used for purging in pump replacement operations and in other miscellaneous process gas system maintenance operations, e.g. valve replacement.
G. The Electrical System provides power to the instrumentation in the Nitrogen System.
H. The cylinder pressure test and pump out system in the ventilated room of the CRDB uses gaseous nitrogen for testing and purging.
I. The Mass Spectrometry, Environmental Monitoring and Chemical Labs use gaseous nitrogen.
J. Nitrogen is used within the Centrifuge Assembly Building during assembly, testing, and purging of centrifuges.

3.5.11.4 Operational Characteristics

The Nitrogen System is designed to supply liquid and gaseous nitrogen on demand.

3.5.11.4.1 Routine Operation

Liquid nitrogen is delivered to the four outside liquid nitrogen storage tanks by truck. Liquid nitrogen is transferred from the outside storage tanks through vendor-supplied double wall vacuum insulated cryogenic piping to one dispensing station located outside of the SBM, and one each for the TSB/CRDB and CAB. Portable Dewars are filled at the dispensing station and are used to transport the liquid nitrogen to the points of use. Gaseous nitrogen is generated by vaporizing liquid nitrogen through an ambient air vaporizer. Two vaporizers are provided to assure continued production of gaseous nitrogen when one vaporizer is being defrosted. A pressure regulator prevents storage tank over-pressure by releasing tank boil-off nitrogen to the gaseous nitrogen distribution piping. A pressure build-up coil maintains nitrogen storage tank pressure for transfer of liquid nitrogen.

Storage tank back pressure control valves vent excess nitrogen to the atmosphere in the event that tank boil off rate exceeds nitrogen consumption. Safety relief valves are provided to protect against tank over-pressurization. Relief valves are also provided in the distribution piping.

Switching valves divert liquid nitrogen to spare vaporizers during defrost cycles, and a manual valve is provided at the liquid nitrogen dispensing station for filling Dewars.

Pressure regulating valves in gaseous nitrogen supply lines maintain distribution pressure. There are four subsystems designed to distribute gaseous nitrogen. The distribution is shown on Figure 3.5-19.

3.5.11.4.2 Non-routine Operation

A. Equipment Failure. This system is not considered critical to facility operation and spare components are not installed. Dual vaporizers permit continuous production of gaseous nitrogen and provide some redundancy in the event of failure of one of the vaporizers. A small inventory of liquid nitrogen is available from the Dewars in the event of an interruption of the liquid nitrogen transfer line. The four tanks add redundancy.

B. Instrument Failure. Instrument failure may lead to over-pressurization of the liquid nitrogen storage vessel. A pressure relief valve is provided on the tank to protect against over-pressurizing the tank.

C. Instrument Air Failure. Instrument air failure does not affect this system.

D. Instrument Failure. Instrument failure of system or header regulators could cause overpressurization of the gaseous system. Multiple relief valves are provided to protect against overpressure.

3.5.11.5 Safety Considerations

Failure of this system will not endanger the health and safety of the plant personnel or the public.

3.5.12 Liquid Effluent Collection and Treatment System (LECTS)

Various types of aqueous and non-aqueous liquid wastes are generated in the facility. These effluents may be contaminated, potentially contaminated with low amounts of contamination, or non-contaminated.

A Liquid Effluent Collection and Treatment System is located in the Liquid Effluent Collection and Treatment Room in the CRDB. Non-contaminated aqueous effluents that are generated are collected, monitored for contamination, and discharged directly to the Treated Effluent Evaporative Basin (TEEB) if found to meet all regulatory and administrative requirements. Non-aqueous liquid wastes that are generated are collected and disposed of in accordance with all federal, state, and local regulations and in accordance with good and accepted industrial practice. All effluent collection, treatment, and disposal is done with respect to the safety of all personnel and in strict accordance with all federal, state, and local regulations. All contaminated effluents are handled to keep radiation doses to operating personnel and the public as low as reasonably achievable (ALARA).

3.5.12.1 Aqueous Liquid Effluents

Quantities of radiologically contaminated, potentially radiologically contaminated, and non-radiologically contaminated aqueous liquid effluents are generated in a variety of operations and processes in the CRDB and in the SBM. The majority of all potentially radiologically contaminated aqueous liquid effluents are generated in the CRDB. All aqueous liquid effluents generated in the CRDB are collected in tanks that are located in the Liquid Effluent Collection and Treatment Room in the CRDB. The collected effluent is sampled and analyzed to determine if treatment is required before release to the TEEB.

3.5.12.1.1 System Description

3.5.12.1.1.1 Citric Acid

When the Citric Acid Tank in the Decontamination Workshop is drained, all the effluent is transferred to the Spent Citric Acid Collection Tank in the Liquid Effluent Collection and Treatment Room. A "sludge" remains in the bottom of the Citric Acid Tank. This "sludge" consists primarily of uranium and metal particles. This sludge is flushed out with DI water. The combination of the sludge and the DI water also goes to the Spent Citric Acid Collection Tank. The spent citric acid effluent/sludge contains the wastes from the Sample Bottle and Flexible Hose Decontamination Cabinets, which are manually transferred to the Citric Acid Tank in the Decontamination System. The contents of the Spent Citric Acid Collection Tank are constantly agitated to keep all solids in suspension and to provide a homogeneous solution. This is necessary to prevent build-up of uranic material in the bottom of the tank.

3.5.12.1.1.2 Degreaser Water

When the Degreaser Tank in the Decontamination Workshop is drained, all the effluent is transferred to the Degreaser Water Collection Tank in the Liquid Effluent Collection and Treatment Room. A "sludge" remains in the bottom of the Degreaser Tank after the degreasing water is drained. This "sludge" consists primarily of PFPE oil and uranium. This sludge is flushed out with DI water. The combination of the sludge and the DI water also goes to the Degreaser Water Collection Tank. The contents of the Degreaser Water Collection Tank remain agitated to keep all solids in suspension and to provide a homogeneous solution. This is necessary to prevent build-up of uranic material in the bottom of the tank. Since this effluent contains PFPE oil, it is not possible to send the degreaser water to the Precipitation Treatment Tank for treatment. Therefore, the PFPE oil must be removed first.

For PFPE oil removal, the contents of the Degreaser Water Collection Tank circulate through a small centrifuge. The oil and sludge are centrifuged off, collected in a container, and sent for offsite low-level waste disposal.

3.5.12.1.1.3 Laboratory Effluent

Aqueous laboratory effluents with uranic concentrations are sampled to determine their uranic content and then pumped from the labs to the agitated Miscellaneous Effluent Collection Tank in the Liquid Effluent Collection and Treatment Room. Floor washings are sampled to determine their uranic content and then manually emptied into the Miscellaneous Effluent Collection Tank. Condensate may be either manually transported or pumped through piping to the tank after sampling.

3.5.12.1.1.4 Washes and Showers

All water from the personnel hand washes and showers in the CRDB and SBM, goes to the Hand Wash / Shower Monitor Tanks in the Liquid Effluent Collection and Treatment Room. Water from the personnel hand wash and shower in the Centrifuge Test and Post Mortem Areas goes to the Hand Wash / Shower Monitor Tank in the Assembled Centrifuge Storage Area of the CAB. Since these effluents are expected to be non-contaminated, there is no need to provide agitation in these tanks. Samples of the effluents are regularly taken to the laboratory for analysis. Lab testing determines pH, soluble uranic content, and insoluble uranic content. The analysis determines if the effluent meets all federal, state, and local requirements in addition to administrative levels set prior to release to the TEEB. If it is determined the effluent meets all the requirements, it is released to the TEEB. There is little probability these effluents are contaminated. Therefore, it is assumed the effluent always meets the requirements for release to the TEEB. No provisions are provided for any treatment of these effluents.

3.5.12.1.1.5 Precipitation Treatment Tank

When a batch has been added to, processed at, sampled at, and analyzed at the Spent Citric Acid Collection Tank, Degreaser Water Collection Tank, or Miscellaneous Effluent Collection Tank, the contents are transferred to the Precipitation Treatment Tank.

The Precipitation Treatment Tank (see Figure 3.5-20, Process Flow Diagram, Precipitation/ Treatment) is used to remove the majority of the uranium that is in solution. After the effluent is transferred to the Precipitation Treatment Tank, a precipitating agent, such as potassium hydroxide (KOH) or sodium hydroxide (NaOH), is added. The addition of the precipitating agent raises the pH of the effluent to the range of 9 to 12. This makes the soluble uranium compounds become insoluble compounds that precipitate from the solution. The tank contents are constantly agitated to provide a homogeneous solution. The precipitated compounds are then removed from the effluent by circulation through a small filter press. The material removed by the filter press is deposited in a container and sent for off-site low-level waste disposal.

The clean effluent from the filter press is re-circulated back to the Precipitation Treatment Tank. Depending on the characteristics of the effluent and the filter press design, the effluent may have to be circulated through the filter press numerous times to obtain the percent of solids removal required. A sample of the effluent is taken to determine when the correct amount of solids has been removed. When it is determined that the correct amount of solids have been removed, the effluent is transferred to the Contaminated Effluent Hold Tank.

3.5.12.1.1.6 Contaminated Effluent Hold Tank

The effluent in the Contaminated Effluent Hold Tank is transferred to the agitated Evaporator/Dryer Feed Tank. Acid is added via a small chemical addition unit to reduce the pH back down to 7 or 8. This is necessary to help minimize corrosion in the Evaporator/Dryer.

3.5.12.1.1.7 Evaporator/Dryer Feed Tank and Evaporator/Dryer

From the Evaporator/Dryer Feed Tank, the effluent is pumped to the Evaporator/Dryer. The Evaporator/Dryer is an agitated thin film type that separates out the solids in the effluent. The Evaporator/Dryer is heated by steam (generated by an electric boiler in the room) in a jacket or from an electric coil. As the effluent enters the Evaporator/Dryer, the effluent is heated, and the water is vaporized. The Evaporator/Dryer discharges a "dry" concentrate into a container located at the bottom of the Evaporator/Dryer. Container contents are monitored for criticality, labeled, and stored in the radioactive waste storage area. When full, the container is sent for shipment off-site to a licensed radioactive waste disposal facility. Liquid vapor exits the evaporator and is condensed in the Evaporator/Dryer Condenser.

The condensate from the condenser is collected in the Distillate Tank before being transferred to one of the Treated Effluent Monitor Tanks. The effluent in these tanks is sampled and tested for pH and uranic content to validate compliance with regulatory and administrative guidelines prior to release to the TEEB. If the effluent test results are acceptable, then it is released to the TEEB. However, if the lab tests show the effluent does not meet regulatory and administrative guidelines, the effluent can be further treated. Depending on what conditions the lab testing show, the effluent is either directed back to the Evaporator/Dryer Feed Tank for another pass through the Evaporator/Dryer, or it can be directed through the Mixed Bed Demineralizers. After either option, the effluent is transferred back to a Treated Effluent Monitor Tank where it is again tested. When the lab tests are acceptable, the effluent is released to the TEEB.

3.5.12.1.2 Major Components

Handling and eventual disposition of the aqueous liquid effluents is accomplished in two stages, collection and treatment. All aqueous liquid effluents are collected in tanks that are located in the Liquid Effluent Collection and Treatment Room in the CRDB and Assembled Centrifuge Storage Area in the CAB.

Table 3.5-9, Liquid Effluent Collection and Treatment System, Collection Tanks, lists the collection tanks, their respective sizes, and the effluents deposited into them.

In addition to the listed tanks, which are used for effluent collection from the various areas throughout the plant, there are other tanks in the Liquid Effluent Collection and Treatment Room used for monitoring and treatment prior to release of the effluents to the TEEB.

These tanks, their size, and their purpose are listed in Table 3.5-10, Liquid Effluent Collection and Treatment System, Monitoring and Treatment Tanks.

3.5.12.1.3 Interfaces

The Liquid Effluent Collection and Treatment System interfaces with the following other plant systems and areas:

A. Decontamination Workshop. The spent citric acid waste and the spent degreaser water are pumped from this system to their respective tanks in the Liquid Effluent Collection and Treatment Room. Small amounts of floor washings from this area are also collected in the Miscellaneous Effluent Collection Tank.

B. Compressed Air System. This system provides air for any diaphragm pumps that may be used in the Liquid Effluent Collection and Treatment System in addition to any requirements for instrumentation or pneumatic controls in the room.

C. Process Water System. After being processed by a water purification system, the DI water is used for rinsing out the tanks and pumps in the system to prevent potential sludge build-ups.

D. Solid Waste Collection System. Solid waste from the filter press, centrifuge, and evaporator is collected in containers. This tank collects and handles other solid wastes, such as cloths and rags, and ensures that it is disposed of offsite appropriately.

E. Separations Building Modules. Small amounts of floor washings and miscellaneous condensates from this area are collected in the Miscellaneous Effluent Collection Tank.

F. Ventilated Room. Small amounts of floor washings from this area are collected in the Miscellaneous Effluent Collection Tank.

G. Vacuum Pump Rebuild Workshop. Small amounts of floor washings from this area are collected in the Miscellaneous Effluent Collection Tank.

H. UF_6 Handling Area. This area of the facility containing UF_6 has small amounts of floor washings that are collected in the Miscellaneous Effluent Collection Tank.

I. Personnel Hand Wash and Shower Areas. Effluent water is generated from employees who work in contaminated areas washing their hands and taking showers after dealing with contaminated materials. This is not expected to be contaminated effluent.

J. Treated Effluent Evaporative Basin. Receives treated and non-contaminated effluent from the Liquid Effluent and Treatment System.

K. Air Cooled Chillers System is used to condense the vaporized effluent downstream of the evaporator.

L. Electrical System. Power is required for the process for some of the equipment and instrumentation.

M. Laboratories. Liquid effluent from the Chemical Laboratoryand the Mass Spectrometry Laboratory are collected in the Miscellaneous Effluent Collection Tank.

3.5.12.1.4 Safety Considerations

Equipment for effluent collection and treatment in the Liquid Effluent Collection and Treatment Room in the CRDB are separated into various radiological zones depending on contamination levels. The Wash/Shower Tanks are generally non-contaminated (or contain very low levels of uranium) and are located together in one corner of the room. The tanks with higher contamination are located in the opposite corner of the room. This separation helps keep exposures to ALARA (as low as reasonably achievable.) All tanks have overflow piping and atmospheric vents. The tanks also have inspection hatches to ensure that they are completely empty after a batch has been processed.

The criticality safety for tanks that are not "geometrically safe" or "geometrically favorable" will utilize two independent IROFS for mass control, one IROFS is referred to as "bookkeeping measures" and the second IROFS is referred to as "sampled and analyzed," e.g., tank contents are sampled and analyzed before being transferred to another tank or out of the system. The "bookkeeping measures" is a process to calculate the potential mass of uranium in the tank for any batch operation to ensure that no tank holds more than a safe mass of uranium. This calculated mass of uranium is then compared to a mass limit, which is based on the double-batching limit on mass of uranium in a vessel from the criticality safety analyses. The "bookkeeping measures" process is described in further detail below.

For NEF, the "bookkeeping measures" are only applied to tanks where the mass of uranium involved, even when double batching error is considered, is far below the safe value. Bookkeeping measures are a documented running inventory estimate of the total uranium mass in a particular tank. The mass inventory for each batch operation is calculated based on the mass of material to be transferred during each batch operation and the mass inventory in the tank prior to the addition of the material from the batch operation.

There are two types of batch operations that are considered. The first type is liquid transfer between tanks based on moving a volume of liquid with uranic material present in the volume. The second is transferring a number of components into the tank with the uranic material contained within or on the components transferred in each batch operation. For both types of operations, the initial mass inventory is set after emptying, cleaning, and readying the tank for receipt of uranic material. For each batch operation, the amount of uranic material to be transferred during a particular batch operation is estimated. This quantity of material is then credited/debited to/from each tank as appropriate. A new mass inventory in each tank is calculated. The calculated receiving tank mass inventory is compared to the mass limit for the tank prior to the transfer.

For the second type, a transfer of a number of facility components into an open tank during a batch operation, the mass inventory on/within the components is estimated, and that mass credited to the receiving tank. The final mass inventory in the tank is calculated and the total is compared to the mass limit for the tank prior to the transfer. Open tanks associated with this system are located in the Decontamination Workshop.

The Spent Citric Acid Collection Tank, Degreaser Water Collection Tank, Miscellaneous Effluent Collection Tank, and Precipitation Treatment Tank are all located in a contained area. The containment consists of a curb around all the above-mentioned tanks. The curbed area is capable of containing at least one catastrophic failure of one tank (1325 L (350 gal), minimum). In the event of a tank failure, the effluent in the confined area is pumped out with a portable pump set.

Due to the low probability of a uranic contamination in the Hand Wash/Shower Monitor Tanks, no curbed confinement of these tanks is provided in the event of a catastrophic failure. Any small amounts of these effluents that leak onto the floor drain to a floor sump. The effluents in this sump are pumped out with a portable pump set.

3.5.12.1.5 Operating Characteristics

The uranium content of tanks is important to prevent a criticality accident. None of the tanks in the collection and treatment system are "geometrically safe" or "geometrically favorable". Administrative controls (by mass) are applied to prevent a criticality accident.

The pH of the Dryer Feed Tank is important to minimize the corrosion in the equipment. The pH is always maintained within the manufacturer's recommended range.

Aqueous radiologically contaminated liquid effluents are processed on-site to remove the uranic content. After treatment these effluents and all non-contaminated aqueous effluents are discharged to the TEEB. Reduced volume, radiologically contaminated wastes that are produced as a by-product of the treatment system, as well as contaminated non-aqueous wastes, are packaged and shipped to a licensed radioactive waste disposal facility.

3.5.12.2 Non-Aqueous Liquid Effluents

Various non-aqueous liquid effluents are generated throughout the plant. The majority of these are non-radiologically contaminated and are generated outside areas in which radioactive materials are handled. A small percentage may be radiologically contaminated. These wastes are ones that cannot be collected and treated in the Liquid Effluent Collection and Treatment System because of their chemical characteristics (i.e., they cannot be processed through the system because they might damage or decrease the performance of the equipment in the treatment system). These chemicals also might be EPA hazardous chemicals that cannot enter the aqueous waste stream that goes to the TEEB. Special treatment and/or disposal methods are required for these wastes. They are not mixed with any of the effluent streams in the Liquid Effluent Collection and Treatment System.

3.5.12.2.1 System Description

Non-aqueous liquid wastes are generated throughout the plant. These wastes are collected, identified, and temporarily stored in a waste storage area. Appropriate containers are used for storage of all wastes to preclude leakage, intermixing, evaporation, and spillage. To preclude a criticality accident, all potentially radioactive wastes are stored in accordance with approved procedures that incorporate appropriate criticality safety controls.

The non-aqueous portion of the liquid effluent system arises from the following areas:

- Radiologically contaminated solvents from Chemical Laboratory and the Decontamination Workshop.
- Non-radiologically contaminated effluents from the General Mechanical, Electrical and Instrumentation Workshop, Diesel Generator Area, CUB, CAB, and the Laboratories.

The following non-aqueous liquid wastes are collected, packaged, stored and disposed of:

A. Lubrication Oils and Greases. Consist of various hydrocarbon lubricants collected during maintenance activities of maintenance equipment, plant vehicles, utilities equipment (such as air compressors and chillers), and from normal workshop activities. None of these oils or greases are radiologically contaminated. (PFPE oil is excluded from this non-aqueous waste disposal.)

B. Solvents. Non-radiologically contaminated solvents are produced in the maintenance workshops and in the Centrifuge Assembly Building. Contaminated solvents arise from the various laboratories. These are handled as "mixed" waste and sent offsite for processing and disposal by a licensed facility.

C. Laboratory Chemicals. Waste chemicals are produced in the various laboratories.

D. Miscellaneous Wastes. Special wastes need special disposal or are recycled as part of good industry practice. Examples of such materials are ethylene glycol coolants and refrigerants.

Wet solid wastes and PFPE oil are not handled in the same manner as these other non-aqueous wastes.

The non-aqueous liquid wastes are collected manually in special containers. All waste containers are identified to show the contents (material type), potential for being radioactive, and potential for being hazardous. Each waste container is also marked with a unique identification number. A determination is then made as to whether analysis is needed to determine if a waste is radioactive or hazardous. A typical method for testing liquid waste for radioactive contamination is with a gamma detection system. Liquid wastes that cannot be processed in the Liquid Effluent Collection and Treatment System are stored in the SWCR of the CRDB prior to being sent off-site for processing and disposal. All liquid waste storage areas are designed to collect and contain spills and leakage in a safe manner.

Separate storage areas are provided for industrial, hazardous, and radioactive wastes.

3.5.12.2.2 Design Considerations

The Liquid Effluent Collection and Treatment System and the system to collect non-aqueous wastes are sized to process effluents generated in an average year under normal conditions. The systems are designed with some extra capacity to handle upset or abnormal volumes. In the event of a catastrophic failure of the treatment system, provisions can be made to send all effluent off-site to a licensed processing and waste disposal facility.

All piping and equipment in the system that could contain potentially radioactive fluids are constructed of appropriate corrosion resistant metallic or plastic materials. None of the effluents are of such a chemical nature that special materials of construction is necessary. Industrial-grade piping and equipment is used.

All process piping is designed in accordance with American Society of Mechanical Engineers, ASME B31.3, Process Piping. To provide system integrity and prevent leaks, welded construction is used everywhere practical. All collection tanks are designed in accordance with American Water Works Association (AWWA), American Petroleum Institute (API), or ASME Standards. The tanks are vertical cylindrical tanks with conical or dished-head bottoms to promote drainage. All outlets are at the low point of the tank – no space exists for solids to accumulate. All tank vents are open to atmosphere and directed away from personnel/equipment; all tank overflows are directed to sumps or do not pose a serious hazard. All tanks have inspection hatches to ensure the tanks are emptied. Mixers or recirculation loops are provided for each tank that requires mixing prior to sampling to ensure that each sample is representative of the tank contents.

None of the tanks are "geometrically safe" or "geometrically favorable." Criticality is controlled by administrative controls. The entire system is designed so that all operation and maintenance activities can be performed while keeping personnel radiation exposures ALARA.

3.5.13 (See SAR § 12.2.3.3) Solid Waste Collection System

Solid wastes are produced in a number of plant activities and require a variety of methods for treatment and disposal. Solid wastes are categorized into wet solid waste and dry solid waste due to differences in handling, storage, and disposal requirements. For disposal of solid waste (radioactive waste and mixed waste), 10 CFR 61.56(a)(3) (CFR, 2003a) requires: "Solid waste containing liquid shall contain as little free standing and noncorrosive liquid as reasonably achievable, but in no case shall the liquid exceed 1% of the volume." For this facility, dry solid waste is waste that meets the requirement in its as-generated form and wet solid waste is waste that requires treatment prior to disposal to meet this requirement.

The Solid Waste Collection System is simply a group of methods and procedures, all applied as appropriate to the various solid wastes. Each individual waste is handled differently according to its unique combination of characteristics and constraints. Wet and dry solid wastes are described separately below.

3.5.13.1 Wet Solid Wastes

The wet waste portion of the Solid Waste Collection System handles all radiological, hazardous, mixed, and industrial solid wastes from the plant that do not meet the above definition of dry solid waste. The system assures the waste is properly handled, stored, and disposed of for the protection of the public, the plant workers, and the environment.

3.5.13.1.1 System Description

The Solid Waste Collection System handles several different types of wet solid waste: wet trash, oil recovery sludge, oil filters, resins, degreaser sludge, and uranic waste precipitate. The system collects, identifies, prepares, records, and stores these wastes for shipment.

Wet solid wastes that are generated in the plant are divided into radioactive, hazardous, mixed, or industrial waste categories. Mixed waste is that which includes both radioactive and hazardous waste. Industrial waste does not include either radioactive or hazardous waste. Each waste category is segregated during collection, during packaging for shipment, and in storage.

This system, primarily consisting of a number of manual steps, has no major components. Minor components, such as container assay equipment, a container compactor, and a container weigh scale, are employed when appropriate for packaging of waste in the SWCR of the CRDB.

3.5.13.1.2 Interfaces

The wet solid waste portion of the Solid Waste Collection System interfaces with the PFPE Oil Recovery System and the Liquid Effluent Collection and Treatment System. Handling of each waste type is described below.

3.5.13.1.2.1 Wet Trash

In this facility, trash typically consists of waste paper, packing material, clothing, rags, wipes, mop heads, and absorption media. Wet trash consists of trash that contains water, oil, or chemical solutions.

Generation of "radioactive" wet trash is minimized as much as possible. Trash with radioactive contamination is collected in specially marked plastic-bag-lined drums. These drums are located in a Radiologically Controlled Area (RCA) as necessary. Wet trash is collected in separate drums from dry trash. When a drum of wet trash is full, the drum is then taken to the SWCR. The plastic bag is removed from the drum and sealed. The bag is then checked for leaks and excessive liquid, and the exterior is monitored for contamination. If necessary, excess liquids are drained and the exterior is cleaned. The trash is identified, packaged, labeled, and recorded. Collected radioactive trash is stored in an appropriate container in the SWCR until it can be shipped offsite for treatment and then disposal.

The radioactive trash is shipped to a Central Volume Reduction Facility (CVRF) that can process wet trash. The licensed CVRF reduces the volume of the trash and then repackages the resulting waste for disposal. The waste package is then shipped to a licensed radioactive waste disposal facility.

Trash with "hazardous" (CFR, 2003b) contamination is collected in special plastic bag-lined drums. When full, the drum is taken to the SWCR, the plastic bag containing wet trash is removed from its container, sealed, the exterior monitored for hazardous material, and the exterior cleaned if necessary. The trash is identified, packaged, labeled, and recorded. All hazardous trash is stored in the SWCR until it is shipped to a licensed hazardous waste disposal facility. To prevent accidental reactions, different types of hazardous materials are not mixed together.

Empty containers (CFR, 2003c) that at one time contained hazardous materials are considered waste if designated such by administrative guidelines. After such a container is emptied, it is resealed and taken to the SWCR for identification, labeling, and recording. The container can be handled as if it is hazardous waste and be shipped to a licensed hazardous waste processing facility for cleaning and/or disposal. Otherwise, the container is used to store compatible hazardous waste and to ship that waste to a licensed hazardous waste processing facility for processing and container disposal.

"Mixed" (CFR, 2003b) trash results from using wipes and rags with solvent on uranium-contaminated components. It is collected in appropriate containers and segregated from other trash. The waste is identified, packaged, labeled, recorded, and stored in accordance with regulations for both hazardous and radioactive wastes. Mixed waste is shipped to a facility licensed to process mixed waste. Waste resulting from the processing by the licensed facility is then forwarded to a qualified disposal facility licensed to dispose of the particular resulting waste.

"Industrial" trash is collected in specially marked receptacles in all parts of the plant. Trash that contains free liquids is dewatered before it is put into a receptacle. The trash from an RCA is collected in plastic bags and taken to the SWCR for inspection to ensure that no radioactive contamination is present. The inspected trash and the trash from outside an RCA are then taken to one of several dumpsters around the plant. The trash is stored in these dumpsters until it is transported to a local landfill by a contract carrier.

3.5.13.1.2.2 Oil Recovery Sludge

The recovery process for PFPE oil generates an oily sludge which is handled by this system. The sludge results from the removal of uranium and hydrocarbons from PFPE (perfluorinated polyether) oil. Sodium carbonate, charcoal, and celite contribute to this sludge. A contracted radioactive waste processor will process the waste at an off-site location. Alternatively, the waste may be shipped offsite to a licensed CVRF for volume reduction. Regulations and technology current at the time of waste production will dictate treatment methods. In either case the waste is disposed of at a licensed low-level radioactive waste disposal facility.

3.5.13.1.2.3 Oil Filters

Used oil filters are collected from the diesel generators and from facility vehicles. No filters are radioactively contaminated. The used filters are placed in containers and transported to the SWCR. There the filters are drained completely and transferred to a drum. The drained waste oil is drummed with other non-radioactive waste oil and handled appropriately. Once a drum is full of spent filters, absorbent material is added and the drum is sealed and labeled. The drums are shipped to an appropriate off-site licensed waste disposal contractor.

3.5.13.1.2.4 Resins

Spent ion exchange resin is collected from the Centrifuge Cooling Water Distribution System polishers. These resins are not radioactively contaminated. The spent resins are received, used, dewatered, and returned to an independent contractor for regeneration or disposal under a lease agreement.

Radioactively contaminated resin is collected from the Liquid Effluent Collection and Treatment System deionizers. Normally, the resins for deionizer operation are contained in a portable vessel suitable for disposal by the lease contractor. The vessel is disconnected, dewatered, sealed, and stored in the SWCR. The vessel of resin is shipped to a contractor for disposal in a licensed low-level radioactive waste disposal facility.

3.5.13.1.2.5 Degreaser Sludge

The Degreaser Tank in the Decontamination Workshop handles radioactive components. Sludge is pumped from the Degreaser Tank to the Degreaser Water Collection Tank and then to the Degreaser Water Centrifuge. The sludge discharge from the centrifuge is collected, packaged, labeled, and stored as radioactive waste. The waste is shipped to a facility licensed to process radioactive waste. Waste resulting from the processing is then forwarded to a qualified disposal facility licensed to dispose of the particular resulting waste.

The UF_6 Pump workshop handles only decontaminated components, so the sludge is collected, packaged, labeled, and stored in the SWCR as hazardous waste. This hazardous waste is shipped to a licensed hazardous waste disposal facility.

3.5.13.1.2.6 Uranic Waste Precipitate

Aqueous uranic liquid waste is processed in a precipitator filter press to remove most of the uranium prior to evaporation of the liquid stream in the Evaporator/Dryer (see Section 3.5.12, Liquid Effluent Collection and Treatment System). This aqueous waste is from the Miscellaneous Effluent Collection Tank, Spent Citric Acid Collection Tank, and Degreaser Water Collection Tank. The uranium is precipitated out of solution and water is removed by the filter press. The remaining precipitate is collected, packaged, labeled, and stored in the SWCR. The waste is disposed of in a licensed low-level radioactive waste disposal facility.

3.5.13.1.3 Operating Characteristics

Since the "wet" solid waste system is actually a series of steps performed manually, the system description in the above paragraphs also serves to provide the system operating characteristics.

All solid radioactive waste is Class A low-level waste as defined in 10 CFR 61 (CFR, 2003d).

3.5.13.1.4 Safety Considerations

Failure of this system will not endanger the health and safety of the public. Nevertheless, design and operating features enhance public and worker safety. This system assures safety by containment of materials, by strict administrative procedural controls, and by systematic inspections of waste materials. Minor leaks and spills onsite would be collected by a temporary bund, from where these would be soaked up with mops and rags. Shipment of wastes offsite strictly adheres to regulations for packaging and transportation. The mass limit of fissile material prepared for offsite shipment shall not exceed the fissile material limits of 10 CFR 71, (CFR, 2003f). Appropriate protective clothing and respiratory equipment is required for plant workers as needed depending on the material being handled.

3.5.13.2 Dry Solid Wastes

The dry solid waste portion of the Solid Waste Collection System handles dry radiological, hazardous, mixed, and industrial solid wastes from the plant. The system assures the waste is properly handled and disposed of for the protection of the public, the plant workers, and the environment.

3.5.13.2.1 System Description

The dry solid waste portion of the Solid Waste Collection System handles several different types of waste: trash, activated carbon, activated aluminum oxide, activated sodium fluoride, HEPA filters, scrap metal, laboratory waste, and Evaporator/Dryer concentrate. The system collects, prepares, identifies, records, and stores these wastes for shipment in the SWCR.

Dry solid wastes that are generated in the plant are divided into radioactive, hazardous, mixed, or industrial waste categories. Mixed waste is that which includes both radioactive and hazardous waste. Industrial waste does not include either radioactive or hazardous waste. Each waste category is segregated during collection, during packaging for shipment, and in storage.

No major components are used in the handling of dry solid wastes. Minor components, such as container assay equipment, a container compactor, and a container weigh scale, are employed when appropriate for packaging of waste in the SWCR. System interfaces, and techniques and procedures for handling each of the major waste types is provided below.

3.5.13.2.2 Interfaces

The dry waste portion of the Solid Waste Collection System interfaces with the following other plant systems and structures:

A. GEVS. Prefilters, HEPA filters, and impregnated activated carbon filters from these systems are handled in the Solid Waste Collection System.

B. Cylinder Receipt and Dispatch Building HVAC System. Filter elements of this system used to support the confinement ventilation function for the Decontamination Workshop, and Ventilated Room are handled in the Solid Waste Collection System.

C. Centrifuge Assembly Building. Filter elements from this building, including prefilters, HEPA filters, and activated carbon filters from the Centrifuge Test and Post Mortem Facilities Exhaust Filtration System, are handled in the Solid Waste Collection System.

D. Contingency Dump System. Activated sodium fluoride from this system is handled in the Solid Waste Collection System.

E. Ventilated Room. Adsorber vessels containing radioactively contaminated activated carbon, activated aluminum oxide, and sodium fluoride are emptied in this room.

F. Solid Waste Collection System (wet waste portion). Solid wastes that do not meet the requirements for liquid content are transferred to the dry waste portion of the Solid Waste Collection System.

G. Compressed Air System. Filter elements from this system are transferred to the Solid Waste Collection System.

H. UF_6 Process Vent Systems. Activated carbon and activated aluminum oxide are transferred from the UF_6 Feed System, Product Take-off System, Tails Take-off System, Product Liquid Sampling System, Product Blending System Cylinder test, and Ventilation Room Cylinder pump out systems to the Solid Waste Collection System for disposal.

I. Mobile Pump Sets. Activated carbon and activated aluminum oxide are transferred from these pump sets to the Solid Waste Collection System for disposal.

J. Administration Building HVAC System. Filter elements from this building are disposed of in the Solid Waste Collection System.

K. Decontamination Workshop. Contaminated material removed from equipment during disassembly are transferred to the Solid Waste Collection System. Contaminated metallic wastes may be transferred to the Decontamination Workshop for cleaning rather than disposal as radioactive waste. Metallic wastes and other unusable components that are successfully decontaminated in the Decontamination Workshop are transferred to the Solid Waste Collection System for disposal.

Wastes handled by this system are addressed below.

3.5.13.2.2.1 Dry Trash

Dry trash sources are the same as the wet trash sources, and dry trash is handled in much the same way as wet trash. Section 3.5.13.1.1, System Description, describes the handling of wet trash and should be referred to for details. Only the differences in wet and dry trash handling are provided below.

Steps to remove liquids are unnecessary for dry trash. The dry waste portion of the Solid Waste Collection System accepts wet trash that has been dewatered, as well as dry trash.

"Radioactive" trash is shipped to a licensed CVRF. The licensed CVRF reduces the volume of the trash and then repackages the resulting waste for disposal. Waste handled by the CVRF is disposed of in a licensed radioactive waste disposal facility.

Trash containing "hazardous" material is handled as described above with the wet waste portion of the Solid Waste Collection System.

Aerosol spray cans may be disposed of as industrial trash if they are first totally discharged and then punctured. Special receptacles for spray cans used in the Separations Building Modules are provided and each can is inspected for radioactive contamination, total discharge, and puncture before it can be included with industrial trash.

"Mixed" trash is handled as described above with the wet waste portion of the Solid Waste Collection System. Mixed trash results from use of rags and wipes, with solvent, on radioactively contaminated components.

3.5.13.2.2.2 Activated Carbon

Activated carbon is used in a number of systems to remove uranium compounds from exhaust gases. Due to the hazard of airborne contamination, personal protective clothing and respiration equipment is used during activated carbon handling to prevent exposure of plant personnel. Administrative controls for shape, mass, and areal density, along with appropriate selection of storage containers, prevent criticality. Adsorber vessels containing the spent carbon are transported to the Ventilated Room where the activated carbon is removed from the filter vessel and placed in appropriate containers. This includes 10 kg (22.0 lb) of product trap activated carbon in 12 L (3.2 gal) containers. The contents of the container are sampled to determine the quantity of ^{235}U present. The container is then sealed, the exterior is monitored for contamination, and the container is properly labeled. The container is then temporarily stored in an engineered array in the SWCR. Containers are sent to a licensed CVRF to reduce the volume of the waste, and the licensed CVRF then repackages the resulting waste for shipment to a licensed low-level radioactive waste disposal facility.

Carbon filters are also used in the laboratories where they can become contaminated with hazardous as well as radioactive material. The filters are handled according to their known service. Those potentially hazardous are handled as hazardous, and those potentially containing both hazardous and radioactive material are handled as mixed wastes. Each type of waste is collected, packaged, labeled, recorded, stored in the SWCR, and is then shipped to an appropriately licensed facility for processing/disposal of hazardous and/or mixed waste.

3.5.13.2.2.3 Activated Aluminum Oxide

Activated aluminum oxide is used in a number of systems to remove HF from exhaust gases. Spent aluminum oxide is carefully removed, using personal protective equipment, from absorber vessels in the Ventilated Room to prevent the spread of contamination. The contents of a full container are sampled to determine the quantity of ^{235}U present. The container is then sealed, the exterior is monitored for contamination, and the container is properly labeled. The waste is stored in the SWCR until it is shipped to a licensed radioactive waste disposal facility.

Activated aluminum oxide is also used as a desiccant in the Compressed Air System. This aluminum oxide is not radioactively contaminated and is non-hazardous. It is disposed of in a landfill.

3.5.13.2.2.4 Activated Sodium Fluoride

Activated sodium fluoride (NaF) is used in the Contingency Dump System to remove UF_6 and HF from exhaust gases. The Contingency Dump System is not expected to operate except during transient conditions that occur during a power failure. The NaF is not expected to saturate during the life of the plant. However, if the system is used often and the NaF saturates, the adsorber vessel containing the spent sodium fluoride is transported to the Ventilated Room where the sodium fluoride is removed from the vessel and placed in appropriate containers.

The contents of the container are sampled to determine the quantity of ^{235}U present. The container is then sealed, the exterior is monitored for contamination, and the container is properly labeled. The container is then temporarily stored in the SWCR. Containers are sent to a licensed CVRF to reduce the volume of the waste, and the licensed CVRF then repackages the resulting waste for shipment to a licensed low-level radioactive waste disposal facility. It is expected that NaF will not require treatment and disposal until decommissioning.

3.5.13.2.2.5 Filter Elements

Prefilters and HEPA filters are used in several places throughout the plant to remove dust and dirt, uranium compounds, andHF.

Filters associated with the HVAC System in the Centrifuge Assembly Building remove dust and dirt from the incoming air to ensure the cleanliness of the centrifuge assembly operation. When removed from the housing, the filter elements are wrapped in plastic to prevent the loss of particulate matter. These filter elements are not contaminated with radioactive or hazardous materials so disposal is with industrial trash.

Filters used in the GEVS, and the Centrifuge Test and Post Mortem facilities Exhaust Filtration System and the filters supporting the confinement function of the CRDB HVAC System remove HF and trace uranium compounds from the exhaust air stream. When the filter elements become loaded, they are removed from the housings and wrapped in plastic bags to prevent the spread of radioactive contamination. Due to the hazard of airborne contamination, bag-in-bag-out type filter housings are used. Additionally, either special ventilation equipment or personal protective clothing and respiration equipment is used during filter element handling to prevent contamination of plant personnel. The filter elements are taken to the SWCR where a sample is taken to determine the quantity of ^{235}U present. The exterior of the bag is monitored for contamination and the package is properly marked. The filter elements are sent to a licensed CVRF for processing and then shipped to a licensed low-level radioactive waste disposal facility.

The filter elements used in these units are handled as described immediately above for the GEVS filter elements.

The filter elements are handled as industrial trash unless the ventilation unit is used in an RCA. These filter elements are removed from the unit, wrapped in plastic, and taken to the SWCR to be sampled for uranium compounds. If they are found to be non-contaminated they are handled as industrial trash. If they are found to be contaminated they are handled as described above for the Gaseous Effluent Vent System filter elements.

Air filters from the Non-Contaminated HVAC Systems, Compressed Air System, and the Diesel Generators are handled as industrial waste.

3.5.13.2.2.6 Scrap Metal

Metallic wastes are generated during routine and abnormal maintenance operations. The metal can be either clean, can be contaminated with radioactive material, or can contain hazardous material. Radioactive contamination of metal is always in the form of surface contamination caused by uranium compounds adhering to the metal or caught in cracks and crevices. No process in this facility results in activation of any materials.

Clean scrap metal is collected in bins. This material is transported by contract carrier to a local scrap metal vendor for disposal. Items collected outside of Radiation Areas are disposed of as industrial scrap metal unless there is reason to suspect it contains hazardous material.

Scrap metal is monitored for contamination before it leaves the site. Any metal found to be contaminated is either decontaminated or disposed of as radioactive waste. When feasible, decontamination is the preferred method.

Decontamination is performed in the Decontamination Workshop. Decontamination of large items should not be required until the end of plant life. After decontamination, the item is inspected again for radioactive contamination and disposed of in accordance NRC approved method.

Items that are not suitable for decontamination are inspected to determine the quantity of uranium present, packaged, labeled, and shipped either to a licensed CVRF or a licensed radioactive waste disposal facility.

Metallic items containing hazardous materials, as defined in 40 CFR Part 261 (CFR, 2003e), are collected at the source of the hazardous material. The items are wrapped to contain the material and taken to the SWCR. The items are then cleaned onsite if practical. If onsite cleaning cannot be performed, the items are sent to a licensed hazardous waste processing facility for offsite treatment and disposal.

3.5.13.2.2.7 Laboratory Waste

Small quantities of dry solid hazardous wastes are generated in laboratory activities, including small amounts of unused chemicals and materials with residual hazardous compounds. These materials are collected, sampled, and stored in the SWCR. Precautions are taken when collecting, packaging, and storing to prevent accidental reactions. These materials are shipped to a hazardous waste processing facility where the wastes are prepared for disposal.

Some of the hazardous laboratory material is radioactively contaminated, and is collected, labeled, stored, and recorded as mixed waste. This material is shipped to a licensed facility qualified to process mixed waste for ultimate disposal.

3.5.13.2.2.8 Evaporated/Dryer Concentrate

Potentially radioactive aqueous waste is evaporated in the Evaporator/Dryer to remove effectively all remaining uranium prior to release of the condensed vapor to the TEEB. The Evaporator/Dryer discharges dry concentrate directly into drums. These drums are checked for ^{235}U content, labeled, and stored in the SWCR. The concentrate is shipped to a licensed low-level radioactive waste disposal facility.

3.5.13.2.3 Operating Characteristics

Since the dry waste portion of the Solid Waste Disposal System is actually a series of steps performed manually, the system description in the above paragraphs also serves to provide the system operating characteristics.

All solid radioactive waste is Class A low-level waste as defined in 10 CFR 61 (CFR, 2003d).

3.5.13.2.4 Safety Considerations

Failure of this system will not endanger the health and safety of the public. Nevertheless, design and operating features enhance public and worker safety. Protection from hazardous, radioactive, and mixed material is provided by containment of materials, by strict administrative

procedural controls, and by systematic inspections of waste materials. Onsite spills, if they occur, remain contained within RCAs. Shipment of wastes offsite strictly adheres to regulations for packaging and transportation. The mass limit of fissile material prepared for offsite shipment shall not exceed the fissile material limits of 10 CFR 71 (CFR, 2003f). Appropriate protective clothing and respiratory equipment is required for plant workers depending on the material being handled.

Controls on shape, mass, areal density, and selection of waste containers prevent criticality events.

In addition, MONK8A (SA, 2001) calculations were performed for a single 12 L (3.2 gal) residue container holding charcoal/uranyl fluoride/water mixture over a range of H/U ratios. The container was modeled as an equiaxed cylinder of radius 12.4 cm (4.9 in) and height 24.8 cm (9.8 in) which was placed on a 20 cm (7.9 in) thick concrete layer with reflection beneath the lower face to simulate infinite depth of concrete. The cylinder volume was completely filled with the charcoal/uranic mixture. A 2.5 cm (0.984 in) thick water layer enclosed the cylinder sides and top surface. At the optimum H/U ratio of 24, the value of k_{eff} is 0.7025 compared with a maximum value for k_{eff} of 0.8570 for an isolated 12 L (3.2 gal) cylinder of oil/UF_4 mixture. This indicates that the charcoal mixture will be safe when stored in 12 L (3.2 gal) containers.

For the array, a 5x5 horizontal array of cylinders was modeled explicitly with an additional container in contact with the center cylinder of the 5x5 unit to simulate accidental movement of an extra container into a storage array. The containers were modeled resting on a 30 cm (11.8 in) thick concrete layer and a 2.5 cm (0.984 in) water reflector was placed around each container. The uranic/oil mix was at an H/U ratio of 21. The value of k_{eff} obtained for the array model was 0.9281.

Therefore, arrays of up to 5x5 12 L (3.2 gal) containers containing chemical absorber material are therefore safe under worst-case conditions with 60 cm (23.6 in) spacing between containers.

3.5.14 (See SAR 12.2.3.4) Decontamination Workshop

The Decontamination Workshop is located in the CRDB. The decontamination systems in this workshop are designed to remove radiation from contaminated materials and equipment used in uranium hexafluoride systems, waste handling systems, and miscellaneous other areas of the plant. Space is provided to break down and strip contaminated equipment prior to decontamination. The workshop is also used for the temporary storage and dismantling of failed equipment.

The only significant forms of radioactive contamination found in the facility are uranium hexafluoride (UF_6), uranium tetrafluoride (UF_4), and uranyl fluoride (UO_2F_2).

3.5.14.1 System Description

The Decontamination System has three basic subsystems:

- Equipment decontamination
- Sample bottle and valve decontamination
- Flexible hose decontamination

Equipment decontamination takes place in the Equipment Decontamination Cabinet and includes larger equipment items such as pumps and trap bodies. Sample bottles, valves, and flexible hoses are decontaminated in separate cabinets because of the difficulty of handling the specific shapes. Sample bottles and valves are decontaminated in the Sample Bottle Decontamination Cabinet and flexible hoses are decontaminated in the Flexible Hose Decontamination Cabinet.

3.5.14.1.1 Equipment Preparation for Decontamination

Equipment and components are stored in critically-safe arrays upon delivery to the Decontamination Workshop. These items are then degassed and drained before being broken down and stripped. Once equipment and components are stripped, they are ready to be decontaminated.

3.5.14.1.2 Equipment Decontamination

Stripped equipment and components are put into baskets when they are ready to be decontaminated in the Equipment Decontamination Cabinet (Figure 3.5-21, Process Flow Diagram, Equipment Decontamination System). The baskets are submerged in multiple heated baths, including a degreasing water bath, a citric acid bath, and two rinse water baths to decontaminate items. After the items are dry, they go to the Vacuum Pump Rebuild Workshop for reassembly. Typical equipment items are vacuum pumps and pump components, but may include valves, piping, instruments, tools, and scrap metal.

3.5.14.1.3 Sample Bottle Decontamination

Sample bottles and valves are decontaminated in the Sample Bottle Decontamination Cabinet . Valves are linked together and citric acid is pumped through them, followed by DI water. Sample bottles are individually rinsed with citric acid to decontaminate them, followed by a DI water rinse. The bottles are initially dried using heated, compressed air before being placed into an oven to insure total dryness. The sample bottles are returned to the laboratories in the CRDB where they are used for analysis.

3.5.14.1.4 Decontamination of Flexible Hoses

In the Flexible Hose Decontamination Cabinet, flexible hoses are decontaminated by pumping a citric acid solution through them. DI water is then pumped through the hoses before they are dried using heated, compressed air. The dried hoses are moved into the Vacuum Pump Rebuild Workshop for reuse in the plant.

3.5.14.2 Major Components

The major components associated with breaking down and decontaminating the equipment included in this system are:

A. Tools for moving equipment (e.g., cranes)

B. Tools for stripping equipment.

C. Radiation monitors.

D. Equipment Decontamination Cabinet

   1. Degreaser Tank with: an electric heater, ultrasonic agitator, recirculation pump, associated pipework and valves, instruments and controls, and water spray system.
   2. Citric Acid Tank with: an electric heater, ultrasonic agitator, recirculation pump, associated pipework and valves, instruments and controls, and water spray system.
   3. Two Rinse Water Tanks each with: an electric heater, ultrasonic agitator, recirculation pump, transfer pump, associated pipe work and valves, instruments and control.
   4. Monorail hoist.
   5. Citric Acid Tank and Degreaser Tank clean-up ancillary items, each with: portable transfer pump and associated equipment.

E. Exhaust system with ductwork connected to the GEVS, where required, and general HVAC system for the room.

F. Sample Bottle Decontamination Cabinet - a small citric acid tank (for a fresh solution); a small DI water tank; a pump and associated equipment; a small citric acid tank (for fresh and waste solutions) for washing the valves; and 5-L (1.3 gal) containers for citric acid/uranic waste.

G. Flexible Hose Decontamination Cabinet - a small citric acid tank (for fresh and waste citric acid), a small DI water tank, and two pumps and associated equipment.

3.5.14.3 Interfaces

The Decontamination Workshop interfaces with the following other plant systems and areas:

A. CRDB GEVS. This system in the CRDB pulls a vacuum to capture contaminated or hazardous vapors locally from the decontamination cabinets, the stripping tables, and the Outgas Area.

B. PFPE Oil Recovery System. This system receives the contaminated oil drained from the pumps.

C. Domestic Water System. This system provides the water for the hand wash sinks in the People Air Lock.

D. Compressed Air System. Compressed air is used in the decontamination process for drying sample bottles and flexible hoses. This system may also supply pneumatics to some tools in the workshop.

E. Electrical System. This system provides power to most equipment in the workshop.

F. Liquid Effluent Collection and Treatment System. This system collects, treats, and disposes of the liquid waste coming from the Decontamination Workshop.

G. Solid Waste Collection System. This collects and handles solid wastes, such as cloths, rags, and sludges, and ensures that it is disposed of off-site appropriately.

H. Process Water System. After being processed by a water purification system, the DI water is used in the decontamination system for rinsing the citric acid and solid contaminants.

I. Chemical Laboratory. Samples from the decontamination tanks and systems are taken here to check for uranic content.

J. Heating, Ventilation and Air Conditioning (HVAC) System. This system provides general services to the Decontamination Workshop

3.5.14.4 Operating Characteristics

Decontamination in the Decontamination Workshop begins with the receipt and preparation of contaminated equipment and components. The process consists of a series of steps to dismantle, clean, and rinse the contaminated items individually. Sample bottles, valves, pumps, and equipment that fail or are taken out of the enrichment facility for maintenance are part of the input stream for the workshop. The typical items and quantities expected to be processed in the Decontamination Workshop on an annual basis are listed in Table 3.5-11, Items Processed in the Decontamination Workshop.

3.5.14.4.1 Equipment Preparation for Decontamination

Equipment to be decontaminated must be taken from the facility and prepared for decontamination. Equipment is taken offline prior to removal from the facility. It is then transported to the workshop and stored before being dismantled.

Most of the equipment that is decontaminated are process vacuum pumps. Pumps are taken offline, and the flanges are sealed in the facility prior to movement to the Decontamination Workshop. Pumps enter the Decontamination Workshop through airlock doors. The internal and external doors are electrically interlocked such that only one door can be opened at a time. Pumps may enter the workshop individually or in pairs on pump frames. Valves, piping, flexible hoses, and general plant components are accepted into the room either in plastic bags or with the ends sealed.

Pumps waiting to be processed are stored in the pump storage array to eliminate the possibility of accidental criticality. Each row of the array has a 300 mm (11.8 in) spacing between containers. The distance between rows is 600 mm (23.6 in). Pumps are not accepted if there are no vacancies in the array.

Before being broken down and stripped, all pumps are placed in the Outgas Area, and the local ventilation hose is positioned close to the pump flange. The flange covers are then removed from the pumps. HF and UF_6 fumes from pumps are exhausted via the vent hose, typically over a period of several hours. While in the Outgas Area, PFPE oil is drained from the pump, and if required, the first stage pumps are separated from the second stage pumps. The oil is drained into 5-L (1.3 gal) plastic containers that are labeled so each can be tracked through the process. Miscellaneous equipment is placed in bins and taken to the Outgas Area as necessary.

Prior to removal from the Outgas Area, the outside of equipment bins, pump frames, and oil containers are monitored for radiological contamination. The various items are then taken to the decontamination system or to the PFPE oil storage array as appropriate.

Oil waiting to be processed is stored in the PFPE oil storage array to eliminate the possibility of accidental criticality. When ready for processing, the oil is transferred to the Fomblin© Oil Recovery System where the uranics and hydrocarbon contaminants are separated from the oil prior to its reuse.

After outgassing, individual pumps are removed from the Outgas Area and placed on either of the two hydraulic stripping tables using an overhead crane. The tables can be height-adjusted, and a pump can be moved and positioned on the table. The pump and motor are stripped to component level using various hydraulic and hand tools. Using the overhead crane or mobile jig truck, the components are placed in bins ready for transportation to the Equipment Decontamination Cabinet.

3.5.14.4.2 Equipment Decontamination

Decontamination for pumps and general equipment is done in a series of steps. The equipment is put into a degreaser water bath, a citric acid bath, and is then rinsed with DI water baths. It is transported between baths in a basket using an integral monorail hoist inside the Equipment Decontamination Cabinet (Figure 3.5-21, Process Flow Diagram, Equipment Decontamination System). The decontamination process for most plant components is described below, with a typical cycle time of approximately one hour.

Degreasing takes place in the Degreaser Tank in the Equipment Decontamination Cabinet. Components requiring degreasing are cleaned manually and then immersed into the Degreaser Tank. An open top tank with a sloped bottom is used for removing the residual PFPE oil and greases that may inhibit the decontamination process. The sloped bottom construction is provided for draining the tank completely. During the degreasing process, a pump continuously recirculates the tank contents to accommodate sampling for criticality prevention. The tank has a capacity of 800 L (211 gal), and level control with a local alarm is provided to maintain the liquid level. It is furnished with an ultrasonic agitation facility, and a thermostatically controlled electric heater to maintain the temperature at 60°C (140°F). The tank has a ring header and a manual hose to rinse out residual solids/sludge with DI water after the batch has been pumped to the Liquid Effluent Collection and Treatment System. The degreased components are inspected and then transferred to the Citric Acid Tank for the decontamination part of the process.

Decontamination is accomplished by immersing the contaminated component in a citric acid bath. The Citric Acid Tank and pump system have the same components and are operated and controlled in the same fashion as the Degreaser Tank and pump system. In order to minimize uranium concentration, the rinse water from the final Rinse Water Tank is pumped into the other Rinse Water Tank (closer to the Citric Acid Tank), which in turn is pumped into the Citric Acid Tank. This counter-current system eliminates a waste product stream by concentrating the uranics in the Citric Acid Tank. The rinse water transfer pump is linked with a high level alarm on the Citric Acid Tank to prevent overfilling. After approximately 15 minutes, the component is removed from the Citric Acid Tank to be rinsed.

Two open top Rinse Water Tanks with sloped bottoms are provided to rinse excess citric acid from decontaminated components. Each of the tanks has a liquid capacity of 800 L (211 gal). Both of these tanks are furnished with ultrasonic agitation, a thermostatically controlled electric heater to maintain the content's temperature at 60°C (140°F), and a recirculation pump facility to accommodate sampling for criticality prevention. The sloped bottom is provided for draining the tank completely. Fresh DI water is manually added to the final rinse tank as needed. The water from this tank is pumped into the other Rinse Water Tank (closer to the Citric Acid Tank) to minimize uranium concentration. Level control is provided to maintain the rinse water level. A manual spray hose is available for rinsing each tank after it has been emptied.

All components are dried after decontamination. This is performed manually using compressed air inside the cabinet while the components are still in the basket.

Each of the tanks is sampled periodically to determine the condition of the solution and any sludge present. The Citric Acid Tank and Degreaser Tank contents are analyzed for uranium concentration and citric acid concentration. The results of the analysis are compared to administrative limits set for the uranic content and for the pH of the solutions. Spent solutions, consisting of citric acid, degreasing water, and various uranyl and metallic citrates, are transferred to collection tanks in the Liquid Effluent Collection and Treatment System. After monitoring, the Degreaser Tank waste contents are pumped into the Degreaser Water Collection Tank and the Citric Acid Tank waste solution is pumped into the Spent Citric Acid Collection Tank. The solids contents from both tanks are sprayed with fresh DI water and the resultant mixtures are also pumped to their respective destinations. The Rinse Water Tanks are checked for satisfactory pH and uranic levels; unusable water is transferred to an effluent collection tank in the Liquid Effluent Collection and Treatment System. The quantity of contamination remaining is "as low as reasonably achievable." Components released for unrestricted use do not have contamination exceeding administrative limits. However, if all of a component's surface contamination cannot be monitored or if the contamination exceeds administrative limits, then the component is disposed of as low-level waste. All materials of construction are compatible with the process solutions at operating conditions.

The activities carried out in the Decontamination Workshop give rise to a potentially contaminated gaseous stream, which requires treatment before discharging to the atmosphere. These streams consist of air with traces of UF_6, HF, and uranium particulates (mainly UO_2F_2). Air exhausted from the Equipment Decontamination Cabinet, the Sample Bottle Decontamination Cabinet, and the Flexible Hose Decontamination Cabinet is vented to the CRDB GEVS to ensure airborne contamination is controlled. There are local ventilation ports in the stripping area and Outgas Area that operate under vacuum with all air discharging through the CRDB GEVS. The CRDB GEVS is designed to route these streams to a filter system and to monitor, on a continuous basis, with the resultant exhaust stream discharged to the atmosphere. The room itself has HVAC ventilation.

3.5.14.4.3 Sample Bottle Decontamination

The Decontamination Workshop has a separate area dedicated to sample bottle storage, disassembly, and decontamination, called the Sample Bottle Decontamination Cabinet. Valves are also decontaminated in this cabinet. The decontamination system for valves and sample bottles requires a citric acid rinse and a DI water rinse for both items.

Used sample bottles are weighed to confirm the bottles are empty upon entry into the workshop. The sample bottle valves are loosened outside the cabinet and then are removed once inside the cabinet. A small open container is filled with a citric acid solution. The sample bottles are filled with a clean citric acid solution from this container. Any loose material inside the bottle is dissolved in the solution, which is then poured into a waste container. The sample bottles are then filled with DI water and left to stand for approximately an hour.

The removed valves are linked together in series before being placed downstream of a pump. The pump is fed from a small open container filled with citric acid solution. Citric acid is then recirculated in a closed loop through the valves for an hour. The valves are rinsed after the decontamination step using fresh DI water.

After the bottles and valves have a second DI water rinsing, they are dried manually using heated compressed air and inspected for contamination and rust.

The resulting waste solutions from cleaning the bottles and the valves are collected in 5-L citric acid/uranic waste containers. The solutions are then manually transferred to the Citric Acid Tank in the Equipment Decontamination Cabinet. Any liquid spillages / drips are soaked away with paper tissues that are disposed of in the Solid Waste Collection System.

During the process, air from the cabinet vents to the GEVS to ensure that airborne contamination is controlled. The bottles are then put into an electric oven to ensure total dryness, and on removal are ready for reuse. The cleaned components are transferred to a clean workshop for reassembly followed by pressure and vacuum testing.

3.5.14.4.4 Flexible Hose Decontamination

The decontamination of flexible hoses is performed in a Flexible Hose Decontamination Cabinet . This decontamination cabinet is designed to process only one flexible hose at a time and consists of recirculation loops of citric acid solution and of DI water.

The flexible hose is attached in a closed loop downstream of a closed citric acid tank and a recirculation pump. The flexible hose is flushed with a heated citric acid solution. After the citric acid wash, the hose is attached in a closed loop downstream of a closed DI water tank and a pump. It is then rinsed with heated DI water in a recirculation system. Each flexible hose is then dried in the cabinet using heated compressed air. The cleaned, dry flexible hose is then transferred to the Vacuum Pump Rebuild Workshop for reassembly and pressure testing prior to reuse in the plant.

Interlocks are provided in both recirculation loops such that the recirculation pumps cannot be started if the flexible hose has not been connected correctly at both ends. The cabinet doors are also on an interlock system to ensure that the pump does not start with the doors open. The

tanks each have a temperature transmitter, a level transmitter with high and low alarms, and controls on the electric heating element. Both the citric acid and DI water recirculation pumps are equipped with 15-min timer devices. The two tanks are maintained at 60°C (140°F) when in operation.

The used solutions (citric acid and DI water) are transferred into the Citric Acid Tank in the Equipment Decontamination Cabinet for disposal. The exhaust air goes to the GEVS to ensure airborne contamination is controlled. Spillages from the drip tray are routed to either the citric acid tank or the hot water recirculation tank in the cabinet depending upon the decontamination cycle.

3.5.14.5 Safety Considerations

Failure of this system does not endanger the health and safety of the public. Design and operating features enhance public and worker safety.

To minimize worker exposure, airborne radiological contamination resulting from dismantling is vented to the GEVS. Air suits and portable ventilation units are available for further worker protection.

Containment of chemicals and wastes is provided by equipment and piping components, designated containers, and air filtration systems. All pipe work and vessels in the Decontamination Workshop are provided with design measures to protect against spillage or leakage. Hazardous wastes and materials are contained in tanks and other appropriate containers, and are strictly controlled by administrative procedures. Chemical reaction accidents are prevented by strict control on chemical handling procedures and physical segregation of chemicals in storage locations.

Personnel entry into the facility will be via a sub-change facility. This area has the required boot barrier access, washing and monitoring facilities.

Criticality is precluded through the control of geometry, mass, and the selection of appropriate storage containers. Administrative measures are applied to uranium concentrations in the Citric Acid Tank, Degreaser Tank, and Rinse Water Tanks in the Equipment Decontamination Cabinet to maintain these controls.

In addition, a MONK8A (SA, 2001) calculation was performed for a generic model of arrays of pumps of volume not exceeding 14 L (3.7 gal). The pumps were modeled simply as equiaxed cylinders of uranic material of 14 L (3.7 gal) volume surrounded by an iron annulus of 0.5 cm (0.2 in) thickness representing typical casing thickness for UF_6 pumps. The uranic material was uranyl fluoride/water mixture at an H/U atomic ratio of 7 and at 6.0 $^{w}/_{o}$ ^{235}U enrichment. The two pumps were modeled in contact along the cylinder wall and a 2.5 cm (0.984 in) water annulus was included around each pump to simulate spurious reflection. The pumps were positioned above a 20 cm (7.9 in) thick concrete layer but separated from this layer by the 2.5 cm (0.984 in) water thickness. Reflection was used to simulate an infinite linear array of pump pairs with 60 cm (23.6 in) edge spacing between pairs. The resulting value of k_{eff} was <0.95.

The MONK8A (SA, 2001) model described above was modified to replace the two touching 14 L (3.7 gal) pumps with four pump sets with their frames in contact plus a vacuum cleaner in the center of the arrangement. Each pump set assumed a combination of a Leybold WS1001 pump and a Leybold WS251 pump.

To simulate the product pumping trains, the roots pumps were modeled as equiaxed cylinders with volumes slightly larger to take into account tolerances and thickness (0.4 cm) of the iron casing. The WS1001 pump was rounded up to a volume of 17.6 litres and the WS251 was rounded up to a volume of 7.1 litres. To simulate spurious reflection, the two pumps were modeled as being separated vertically by the thickness of the 2.5 cm (0.984 in) water annulus around the cylinder of the pumps. This spurious reflection assumption is less than the actual separation when the pumps are in their pump frame.

Sensitivity studies show this to be the most reactive configuration for the pump sets. It was also assumed that the pumps were filled with the same uranic mixture as for the 14 L (3.7 gal) pumps and the infinite linear array was again used. The resulting value of k_{eff} was <0.95.

Therefore, a linear array of pump pairs with 60 cm (23.6 in) spacing is safe.

3.5.15 (See SAR § 12.2.3.5) PFPE Oil Recovery System

PFPE oil is a highly fluorinated, inert oil selected especially for use in uranium hexafluoride (UF_6) systems to avoid reaction with UF_6. The PFPE Oil Recovery Unit recovers used PFPE oil from pumps used in UF_6 process systems. Used PFPE oil is recovered by removing impurities that inhibit the oil's lubrication properties. The impurities collected are primarily uranyl fluoride (UO_2F_2) and uranium tetrafluoride (UF_4) particles. The recovery process also removes trace amounts of hydrocarbons, which if left in would react with UF_6. Flow through the PFPE Oil Recovery System, located in the Decontamination Workshop is shown in Figure 3.5-22, Process Flow Diagram, PFPE Oil Recovery System.

The process employed is essentially a laboratory scale unit that has been developed to a production level. PFPE oil recovery is carried out as a batch operation, one batch being up to 12 L (3.2 gal) of oil, using the fully enclosed, self-contained PFPE Oil Recovery Unit. Only one batch of oil is processed at any one time representing a maximum of 12 L (3.2 gal). The unit has a uranium removal section followed by a hydrocarbon removal section. Dimensions of the recovery unit are approximately 3 m (9.84 ft) long by 1 m (3.28 ft) wide by 2.2 m (7.22 ft) high.

3.5.15.1 System Description

The PFPE oil recovery process consists of oil collection, uranium precipitation, trace hydrocarbon removal, oil sampling, and storage of cleaned oil for re-use. Each step is performed manually.

PFPE oil is collected in the Decontamination Workshop as part of the pump disassembly process. The oil is transferred for processing to the PFPE Oil Recovery Unit in criticality safe, 5 L (1.32 gal), plastic containers. The containers are labeled so each can be tracked through the process. The used oil awaiting processing is stored in the PFPE oil receipt storage array to eliminate the possibility of accidental criticality. Each row of the array has 300 mm (0.984 ft) spacing between containers (edge to edge). The distance between rows is 600 mm (1.97 ft) (edge to edge). Containers are not accepted if there are no vacancies in the array.

Uranium compounds are removed from the PFPE oil in the PFPE Oil Recovery Unit to minimize personnel exposure to airborne contamination. Dissolved uranium compounds are removed by the addition of anhydrous sodium carbonate (Na_2CO_3) to the oil container which causes the uranium compounds to precipitate into sodium uranyl carbonate ($Na_4UO_2(CO_3)_3$). The mixture is agitated and then filtered through a coarse screen to remove metal particles and small parts such as screws and nuts. This waste is transferred to the Solid Waste Collection System. The oil is then heated to 90 °C (194 °F) and stirred for 90 minutes to speed the reaction. The oil is centrifuged to remove UF_4, sodium uranyl carbonate, and various metallic fluorides. The particulate that is removed from the oil is collected and transferred to the Solid Waste Collection System for subsequent offsite disposal.

After uranium compounds are removed, trace amounts of hydrocarbons are removed in the PFPE Oil Recovery Unit by adding activated carbon to the PFPE oil and heating the mixture to 100°C (212°F) for two hours. The activated carbon adsorbs the hydrocarbons, and the carbon in turn is removed by filtration through a bed of celite. The resulting sludge is transferred to the Solid Waste Collection System for disposal.

Recovered PFPE oil is sampled, and the samples are dissolved and analyzed in the Chemical Laboratory to determine if the criteria for purity have been met. Oil that meets the criteria can be re-used in the UF_6 system while oil that does not meet the criteria is reprocessed. The following limits have been set for recovered PFPE oil purity for re-use in the plant:

- Uranium - 50 ppm by volume.
- Hydrocarbons - 3 ppm by volume.

Recovered PFPE oil is stored in 5 L (1.32 gal), plastic containers in the chemical storage area. No precautions are required to prevent criticality accidents during the handling and storage of clean PFPE oil.

3.5.15.2 Major Components

The following major components are included in this system:

A. Fomblin© Oil Recovery Unit. One Fomblin© Oil Recovery Unit is provided to control the release of airborne radioactive contamination or HF during oil processing. Discharge air is filtered and is discharged from the plant via the Gaseous Effluent Ventilation System.

B. PFPE Oil Centrifuge. One PFPE oil centrifuge is provided within the recovery unit to remove particulate from the oil. The centrifuge capacity is approximately 60 L/hr (15 gph).

3.5.15.3 Interfaces

The Fomblin© Oil Recovery System interfaces with the following plant systems and areas:

A. GEVS. Exhaust from the fume hood of the Fomblin© Oil Recovery Unit is filtered and discharged from the plant via the CRDB GEVS.

B. Solid Waste Collection System. The Solid Waste Collection System will receive uranic precipitate and filter cake resulting from the uranium and hydrocarbon removal processes, and solvent resulting from rinse-out of filters, tubing, and clean oil containers.

C. Decontamination Workshop. PFPE oil collected in the pump disassembly areas of the Decontamination Workshop is transferred to the Fomblin© Oil Recovery System – also in the Decontamination Workshop - for processing. The PFPE oil centrifuge bowls and parts are transferred for decontamination in the Decontamination System - also in the Decontamination Workshop.

D. Vacuum Pump Rebuild Workshop. Cleaned PFPE oil is transferred to the Vacuum Pump Rebuild Workshop to await reuse in rebuilt pumps.

3.5.15.4 Operating Characteristics

The total annual volume of oil processed in this system is approximately 530 L (140 gal). The above system description serves to describe operating characteristics as well since oil recovery is simply a series of manual steps.

3.5.15.5 Safety Considerations

Failure of this system will not endanger the health and safety of the public. Nevertheless, design and operating features are included which contribute to the safety of plant workers. Containment of chemicals and wastes is provided by components, designated containers, and air filtration systems. Chemical reaction accidents are prevented by strict control on chemical handling procedures and physical segregation of chemicals in storage locations. PFPE oil is rated as non-combustible and is thermally stable up to 300°C (571°F). Strict control of oil temperatures during heating precludes threat of fire. To minimize worker exposure, the Fomblin© Oil Recovery System fume hood extracts all airborne radiological contamination resulting from oil recovery. Where necessary, air suits and portable ventilation units are available for further worker protection.

Criticality associated with PFPE oil recovery is precluded through the control of shape, mass, and the selection of appropriate storage containers.

The maximum volume of any vessel on the Fomblin© Oil Recovery Unit is 12 L (3.2 gal) and is intrinsically safe. However, MONK8A (SA, 2001) calculations demonstrate that the unit would remain safe even if all vessels were completely filled with uranyl fluoride-water mixture at 6.0 $^{w}/_{o}$ enrichment and at optimum moderation. Uranyl fluoride/water mixture is more conservative than a PFPE oil/UF_4 mixture. In the PFPE oil/UF_4 mixture, dissolved HF provides the moderation and HF solubility in PFPE oil is extremely low.

The MONK8A (SA, 2001) calculations for the Fomblin© Oil Recovery Unit modeled the fixed vessels in their normal positions and included one 12 L (3.2 gal) container adjacent to the first mixing vessel to represent the batch of oil being moved to the unit. A 2.5 cm (0.984 in) water layer was modeled around the vessels to simulate spurious reflection. All vessels contained uranyl fluoride-water mixture as stated above, and a range of H/U atomic ratios were considered to determine the optimum moderation. The maximum value of k_{eff} for the calculations was 0.7976 at an H/U ratio of 14.

3.5.16 Not Used

3.5.17 (See SAR § 12.2.3.6) Ventilated Room

The function of the Ventilated Room is to provide a facility for the maintenance of chemical traps and UF_6 cylinders. The facility also deals with faults associated with cylinders and cylinder valves.

This includes safe emptying of chemicals from chemical traps and replacement of faulty valves on full UF_6 cylinders. The Ventilated Room is used for temporary storage of full and empty chemical traps and of the contaminated chemicals used in the chemical traps. The Ventilated Room is in physical proximity to the Decontamination Workshop through which the emptied chemical traps and other components are processed. Full maintenance records are kept for all chemical traps and UF_6 cylinders passing through the Ventilated Room.

3.5.17.1 System Description

The main activities carried out in the Ventilated Room are servicing chemical traps by removing spent carbon, aluminum oxide and sodium fluoride from the chemical traps and replacing damaged and leaking valves on cylinders which contain UF_6.

Personnel can enter the Ventilated Room from two places. One is through an airlock off the corridor of the CRDB. The other is through a roll-up door entering from the Cylinder Transporting and Stillage Area. See Figures 3.3-8 and 9, Cylinder Receipt and Dispatch Building for the location and arrangement of the Ventilated Room. The entry through the corridor in the CRDB is equipped with a change area and appropriate scanning equipment to monitor for contamination.

The Ventilated Room is maintained at a negative pressure relative to the surrounding areas. The negative pressure is to help mitigate any releases of hazardous materials to areas outside of the room. The activities carried out in the Ventilated Room may result in potentially contaminated gaseous effluents that require treatment before being discharged to the atmosphere. These effluents are UF_6, HF, and Uranyl Fluoride.

The most frequent activity in the Ventilated Room is the servicing of chemical traps. After the chemical traps enter the Ventilated Room, they are stored in safe array storage racks. To remove the spent chemicals, a specially designed rig is used. The chemical trap is placed into the rig, and the rig inverts the chemical trap to dump the chemicals. The rig has a connection to the CRDB GEVS to dispose of any airborne contaminates. Removed spent chemicals are placed in containers and sampled for uranium content. After sampling the spent chemicals are transferred to the Solid Waste Collection System. The empty chemical traps are then transported to the Decontamination Workshop and then refilled for future use.

In addition to servicing the chemical traps, UF_6 cylinders with faulty valves are serviced. The cylinders are transported into the Ventilated Room through the adjoining Cylinder Transporting and Stillage Area via a rail transporter. Once in the room, the faulty valve is removed and the threaded connection in the cylinder is inspected. A new valve is then installed in accordance with the requirements of ANSI N-14.1. After the valve is installed, the cylinder will undergo a pressure test with gaseous nitrogen to 1.345 bar absolute (19.5 psia). The valve and its connection into the cylinder are tested for leakage. If no leakage is detected, the cylinder is pumped down to 250 mbar (absolute) (100 in. H_2O) and returned to service. Damaged, contaminated valves are decontaminated and transported to the Solid Waste Collection System.

3.5.17.2 Major Components

The major components of the Ventilated Room and systems within the Ventilated Room are:

A. Powered roll-up door for cylinder entry from the Cylinder Transporting and Stillage Area
B. Personnel air-lock for access from the CRDB Bunkered Area corridor
C. Chemical Trap Emptying Rig
D. Cylinder Pressure Test & Pump Out Rig
E. Transporter rails
F. Slings and shackles for use with the lifting devices and a suitable storage facility
G. Storage areas for contaminated traps; contaminated, dismantled, component bins and contaminated combustible waste
H. Various stripping and dismantling tools, vacuum cleaner, and storage facilities.

3.5.17.3 Interfaces

The Ventilated Room interfaces with the following systems and utilities.

A. CRDB GEVS
B. Decontamination Workshop
C. Solid Waste Collection System
D. Nitrogen System
E. Compressed Air System
F. Electrical System
G. HVAC System
H. De-ionized Water Supply and Distribution System

3.5.17.4 Safety Considerations

Numerous design and operating features are incorporated into the Ventilated Room and the systems within it to provide safe operation and protect the plant operators and the public.

Emptying the chemical traps will generate airborne particulates. Airborne particulates are greatly minimized by emptying the chemical traps in a specially designed rig. The rig is designed to prevent the airborne particulates from escaping from the rig and into the Ventilated Room. The rig is connected to the CRDB GEVS. Operation of the CRDB GEVS is required to establish airflow away from the worker when handling sodium fluoride trap material containing uranic material. In addition to controlling airborne contaminates, the rig is designed to meet criticality control requirements and is safe by geometry.

Plant operators are also required to wear respirators when they are handling chemical traps containing uranic material or when performing positive pressure testing of UF_6 cylinders after repair/replacement of a leaking cylinder component. There are numerous control measures in the Ventilated Room to prevent criticality accidents. Among these are safe storage arrays, moderation control, sampling and mass control.

An automatic trip of the vacuum pump on high weight of the carbon trap for the Ventilated Room evacuation skid and an automatic trip of the vacuum pump on high temperature in the Ventilated Room evacuation skid carbon trap are provided.

Calculations have also been performed on the storage arrays of product vent chemical (carbon) traps. The calculations also cover the storage of alumina traps, which are of similar dimensions but have a lower uptake of uranium. The alumina traps are not normally exposed to uranium (their purpose is to remove HF), but it is possible that an alumina trap could be connected to the plant by mistake in place of a carbon trap. The modeling of alumina traps as carbon traps covers this possibility.

The chemical traps are essentially empty steel cylinders into which steel internal parts including perforated plates to carry the activated carbon are placed. The activated carbon in the trap adsorbs UF_6 which, is then assumed to be hydrated (by moist air inleakage) to form a uranyl fluoride/water mixture with a maximum H/U ratio of 7.

The traps are of internal diameter 20.3 cm (8.0 in) and height 105.8 cm (41.7 in). The diameter is less than the maximum safe diameter (21.9 cm (8.6 in)) for 6.0 $^{w}/_{o}$ enriched material for a single cylinder. However, it is possible that large numbers of traps (e.g., in storage arrays) are more reactive.

Arrays of chemical traps were modeled using MONK8A (SA, 2001). An array of 7x7 traps and a vacuum cleaner yields a k_{eff} of 0.9191 assuming 6.0 $^{w}/_{o}$ enrichment. This was modeled with the sidewalls of the traps touching, which could not happen in practice since there is a lip at the top. Taking account of one of these lips to give 5 cm (2.0 in) spacing between the traps an array of 11x11 traps and a vacuum cleaner was modeled and gave a reduced k_{eff} of 0.8665. The vacuum cleaner was assumed to be a cleaner of internal diameter 20.3 cm (8.0 in) and length 66 cm (26.0 in) and was assumed to be entirely filled with uranic material with an enrichment of 6.0 $^{w}/_{o}$. MONK8A (SA, 2001) calculations have also been carried out for an isolated cylinder using these dimensions, filled with uranyl fluoride/water at optimum moderation and with 2.5 cm (0.984 in) water reflection. This gave a value for k_{eff} of 0.8037. The cleaner has HEPA filtration on the exhaust, and will be dedicated for cleaning operations where uranic material is involved and will be marked clearly.

It can be concluded that arrays of these chemical traps containing uranium of up to 6.0 $^{w}/_{o}$ enrichment are safe up to an11x11 array configuration with no spacing restriction. The only stipulation that needs to be made is that stacking of traps in an array is not allowed.

Other potential hazards of the Ventilated Room are high-pressure air, surface contamination on the cylinders, and cylinders containing UF_6.

Measures have been taken to make the facility as safe as possible. The potential hazard associated with high-pressure air is minimized by the system being designed, inspected, and tested to national standards. Surface contamination is prevented through the performance of a surface wipe test on each cylinder prior to inspection and testing. A gamma detection system at the preparation monitors the presence of ^{235}U and an alarm will sound when threshold values are exceeded.

3.5.18 (See SAR § 12.2.3.7) Chemical Laboratory

The prime function of the Chemical Laboratory is to analyze the product material to ensure that it meets the product purity specification. This involves the handling and storage of a large number of 1S sample bottles and the production of hydrolyzed UF_6 solutions for the subsequent analysis. There may also be a requirement for this laboratory to deal with other samples, for example, those from the Decontamination System's tanks. These samples will have uranium concentrations much less than the hydrolyzed UF_6 solutions considered below and as such can be treated in the same manner. There may be a requirement for other solid samples to be analyzed such as deposits removed from plant components prior to decontamination and these can be dealt with on a formal mass accountancy basis. The double batching mass limit of 45% of the minimum critical mass is used in the nuclear criticality safety for these samples.

Samples of UF_6 are typically received in 1S cylinder sample bottles. The storage system for 1S bottles is a rack system within two storage areas of approximate dimensions of 1 meter wide and 2.5 m (8.2 ft) high. These have a combined total of 168 slots and normally up to three bottles would be placed in one slot. The normal capacity is approximately 500 bottles.

3.5.18.1 System Description

Samples enter the Chemical Laboratory from across the plant for analysis. The samples are categorized as follows.

A. UF_6 product samples
B. Waste water samples
C. Samples from the Decontamination Workshop
D. Oil samples from compressors
E. Samples from chemical absorbers
F. Miscellaneous samples.

3.5.18.2 Major Components

The major components of the Chemical Laboratory include the following.

A. Inductively-coupled Plasma Mass Spectrometer
B. Inductively-coupled Plasma Optical Emission Spectrometer
C. Analytical Laboratory Equipment (UV Spectrometer, pH meter, conductivity meter, titrators, water bath, analytical balances)
D. Fume Collection and Exhaust Hoods

E. Ultra Pure Water Equipment
F. Sub-sampling Unit.

The sub-sampling unit allows smaller samples of UF_6 to be dispensed from plant sample containers (1S or 2S bottles) into P-10 tubes that are then used for analysis or shipment to customers. Sub-sampling must take place while the sample is in the liguid phase. The sub-sampling unit consists of three independently heated dispensing stations mounted on a common base. It is located inside a fume collection exhaust hood.

Each dispensing station is contained in its own electrically heated, insulated hot box. A fan circulates the air inside the hot box. Instrumentation controls the temperature of the hot box and shuts off the heating system on high temperature or loss of vacuum. Two stations are capable of handling 1S sample bottles, and the third station can handle either 1S or 2S sample bottles.

Each station has the necessary piping and valves to transfer a specific quantity of liquid UF_6 into the smaller type P-10 sub-sample tube. The sub-sample tube is located outside the hot box and is cooled with liquid nitrogen in a Dewar flask.

A common manifold connects the sample piping in each station to vacuum pumps via UF_6 cold traps. Three vacuum pumps are mounted on the unit base. For initial system pump down and to remove moisture, a set of two pumps in series is used. For normal operation of the unit a single pump installed in parallel to the dual pump set is used. The vacuum pumps exhaust into the fume collection exhaust hood.

Dual UF_6 cold traps, connected in series, precede the vacuum pumps. The UF_6 cold traps are cooled using liquid nitrogen in Dewar flasks. UF_6 in the exhaust gas is desublimed in the UF_6 cold traps before being exhausted through the vacuum pump.

3.5.18.3 Interfaces

The Chemical Laboratory interfaces with the following systems and utilities.

A. Samples are received from throughout the plant
B. CRDB GEVS
C. CRDB Laboratory HVAC System
D. Nitrogen System
E. Compressed Air System
F. Process Water System (including water processed by a water purification system to produce DI water)
G. Electrical System
H. Liquid Effluent Collection and Treatment System
I. Solid Waste Collection System.

3.5.18.4 Safety Considerations

Failure of this system (laboratory accidents) will not endanger the health and safety of the public. Nevertheless, design and operating features are included that contribute to the safety of plant workers. Wastes are contained in designated containers and the air filtration systems. Criticality is precluded through the control of geometry and mass of fissile materials. To minimize worker exposure, airborne contamination resulting from laboratory operations is exhausted through the CRDB GEVS. Operation of CRDB GEVS connected to the chemical hood is required to establish airflow away from the worker when the UF_6 sub-sampling unit is operated.

A UF_6 cold trap high temperature interlock to close the Cold Trap No. 2 valve is provided in line to sub-sampling rig vacuum pump. This hard-wired single train, fail-safe, feature functions to prevent flow of UF_6 to the CRDB GEVS in the event the associated UF_6 cold trap is above an adequate desublimation temperature.

A high temperature trip of the UF_6 sub-sampling Unit hot box heater is also provided. This automatic, fail-safe, feature functions to trip the hot box heaters at the UF_6 sub-sampling Unit on high hot box internal temperature to ensure sample bottle integrity.

The 1S sample bottles containing enriched uranium, that are stored in the Chemical Laboratory, are filled from 30B product cylinders that are subject to criticality control on moderator content such that the H/U ratio of the contents does not exceed unity. Product UF_6 is controlled to a product specification of 99.5% UF_6 purity equivalent to an H/U ratio of only 0.088 (impurity assumed to be all HF). Although 1S bottles are not strictly moderator controlled in the sense that product cylinders are, their contents are expected to be representative of the UF_6 product.

A full 30B cylinder contains more than 2,000 kg (4,409 lb) of UF_6 that is safe at an H/U ratio of unity. The maximum permitted fill for 1S bottles is 450 g (0.99 lb) UF_6 (plant fill limit is 400 g (0.88 lb)) and therefore approximately 4,000 filled 1S bottles are equivalent to one full 30B cylinder.

The storage array can be considered as a heterogeneous system of vessels in a regular lattice arrangement. A series of MONK8A (SA, 2001) calculations have been carried out for generic storage of 1S bottles which include lattice arrangements of 1S bottles in array sizes exceeding the number stored in the laboratories. These calculations modeled a 25x25 array of 1S bottles containing 450 g (0.99 lb) of $UF_6 \cdot HF$ mixture at 6.0 $^{w}/_{o}$ ^{235}U enrichment. The array was modeled at optimum spacing (triangular pitch) and the water reflection conditions considered included water flooding although flooding of the array is not credible. The most reactive case from the above MONK8A (SA, 2001) calculations gave a value for k_{eff} of 0.6549.

Based on this analysis, the 1S sample bottles are safe in an array.

3.5.19 References

Edition of Codes, Standards, NRC Documents, etc that are not listed below are given in Table 3.0-1.

CFR, 2003a. Title 10, Code of Federal Regulations, Section 61.56, Waste Characteristics, 2003.

CFR, 2003b. Title 40, Code of Federal Regulations, Section 261.3, Definition of Hazardous Waste, 2003.

CFR, 2003c. Title 40, Code of Federal Regulations, Section 261.7, Residues of Hazardous Waste in Empty Containers, 2003.

CFR, 2003d. Title 10, Code of Federal Regulations, Part 61, Licensing Requirement for Land Disposal of Radioactive Waste, 2003.

CFR, 2003e. Title 40, Code of Federal Regulations, Part 261, Identification and Listing of Hazardous Waste, 2003.

CFR, 2003f. Title 10, Code of Federal Regulations, Part 71, Packaging and Transport of Radioactive Material, 2003.

SA, 2001. Serco Assurance, ANSWERS Software Service, "Users Guide for Version 8 ANSWERS/MONK(98) 6," 1987-2001.

3.5.20 Section 3.5 Tables

Table 3.5-1 Codes And Standards

ACI 318, Building Code Requirements for Structural Concrete.
ACI 349, Code Requirements for Nuclear Safety Related Concrete Structures.
AIChE, Guidelines for Hazard Evaluation Procedures.
AISC Manual of Steel Construction – Allowable Stress Design
ANSI N14.1, American National Standard for Nuclear Materials - Uranium Hexafluoride Packaging for Transport.
ANSI N15.5, Statistical Terminology and Notation for Nuclear Materials Management.
ASCE 58, Structural Analysis and Design of Nuclear Plant Facilities, Manuals and Reports on Engineering Practice.
ASCE 7, Minimum Design Loads for Building and Other Structures.
ASME B31.3, Process Piping.
ASME, Boiler and Pressure Vessel Code, Section VIII, Division 1.
ASME, NQA-1, Quality Assurance Requirements for Nuclear Facility Applications.
ASTM C761 - Standard Test Methods for Chemical, Mass Spectrometric, Spectrochemical, Nuclear, and Radiochemical Analysis of Uranium Hexafluoride.
ASTM E 814, Fire Tests of Through-Penetration Fire Stops.
ERDA 76-21, Nuclear Air Cleaning Handbook.
IEEE 336, Standard Installation, Inspection, and Testing Requirements for Power, Instrumentation, and Control Equipment at Nuclear Facilities.
IEEE C2, National Electrical Safety Code.
IFC, International Fire Code
ISO 668, Series 1 Freight Containers - Classification, Dimensions and Ratings.
NFPA 1, Fire Prevention Code, 1997.
NFPA 10, Portable Fire Extinguishers.
NFPA 12, Carbon Dioxide Systems.
NFPA 13, Installation of Sprinkler Systems.
NFPA 14, Standpipe, Private Hydrant and Hose Systems.
NFPA 15, Water Spray Fixed Systems for Fire Protection.
NFPA 20, Installation of Stationary Pumps.
NFPA 2001, Clean Agent Fire Extinguishing Systems.
NFPA 22, Water Tanks for Private Fire Protection.
NFPA 221, Fire Walls and Fire Barrier Walls.
NFPA 24, Private Fire Service Mains and Their Appurtenances.
NFPA 25, Water Based Fire Protection Systems.
NFPA 30, Flammable and Combustible Liquids Code.
NFPA 5000, Building Construction and Safety Code.
NFPA 54, National Fuel Gas Code.
NFPA 55, Compressed & Liquefied Gases in Cylinders.

Table 3.5-1 Codes And Standards

NFPA 58, Liquefied Petroleum Gas Code.
NFPA 600 Industrial Fire Brigades.
New Mexico Electric Code (based on the National Electric Code, NFPA 70).
NFPA 704, Standard System for the Identification of the Hazards of Materials for Emergency Response.
NFPA 72, National Fire Alarm Code.
NFPA 75, Electronic Computer/Data Processing Systems.
NFPA 780, Lightning Protection Systems.
NFPA 80, Fire Doors and Fire Windows.
NFPA 801, Fire Protection for Facilities Handling Radioactive Materials.
NFPA 80A, Exterior Fire Exposures.
NFPA 90A, Installation of Air Conditioning and Ventilating Systems.
NFPA 90B, Installation of Warm Air Heating and Air Conditioning Systems.
NFPA 91, Exhaust Systems for Air Conveying of Materials.
NFPA, Fire Protection Handbook, Section 9, Chapter 30, Nuclear Facilities.
NFPA 110, Standard for Emergency and Standby Power Systems.
NFPA 111, Standard on Stored Electrical Energy Emergency and Standby Power Systems.
NFPA 70E, Standard for Electrical Safety in the Workplace.
NFPA 79, Electrical Standard for Industrial Machinery.
PCI Design Handbook.
International Building Code (as amended by the NMCBC).
Uniform Mechanical Code (as amended by the New Mexico Mechanical Code).
Uniform Plumbing Code (as amended by the New Mexico Plumbing Code).

Editions of Codes, Standards, NRC Documents, etc are listed in Table 3.0-1

Table 3.5-2 Compressed Air System Design Parameters

Nos. of CUB Air Compressors and Air System Components Required	Two of each	
Design Air Compressor Capacity, each	466 m^3/hr (274scfm) – Peak 189 m^3/hr (111 scfm) - Normal	
Design Compressor Outlet Air Pressure	13.7 barg (199 psig)	
Compressed Air Receiver Tank, Operating Pressure	13 barg (188.5 psig)	
Compressed Air Distribution System Supply Design Pressure	13 barg (188.5 psig)	
Compressed Air Receiver Tank Surge Capacity	100 m^3/hr (3553 scfm) 6 cycles/valves/1 minute	
Compressed Air Receiver Tank Storage Capacity	15 m^3 (530 ft^3) each of two tanks	
Compressed Air Dew Point	-40°C at 12.06 barg (-40°F at 175 psig)	
Maximum Oil Concentration in Compressed Air	0.5 mg/m^3	
Maximum Particle Size in Compressed Air	1.0 micron	
	Office Building Compressor Room	South Compressor Room
Nos. of CAB Compressors	2	2
CAB Air Compressor Capacity (design), each	158 scfm (268 m^3/hr)	TBD
Cab Air Compressor Outlet Pressure (design)	150 psig (10.3 barg)	TBD
CAB Compressed Air Receiver Tank Operating Pressure	150 psig (10.3 barg)	TBD
CAB Compressed Air Distribution Supply Design Pressure	180 psig (12.4 barg)	TBD
CAB Compressed Air Receiver Tank Surge Capacity	3553 scfm (100 m^3/hr) 6 cycles/valve/ minute	TBD
CAB Compressed Air Receiver Tank Storage Capacity	60.2 ft^3 (1.7m^3)	TBD
CAB Compressed Air Dew Point	-40°F at 150 psig (-40°C at 10.3 barg)	TBD
CAB Compressed Air Maxium Oil Concentration	0.1 mg/m^3	TBD
CAB Compressed Air Maxium Particle Size	1 micron	TBD

Table 3.5-3 Average Water Consumption

Area/Usage	Average Usage Rates		
	Gal/Day	**GPM**	**Gal/Year**
Domestic Water	16,531	11.48	6,033,906
Cooling Tower Make Up	23,879	16.6	8,720,000
DI Water Make Up	200	.14	70.400
Total Liquid Effluents	1,835	1.27	669,775
Total Average Flow (rounded up)	**43,000**	**30***	**15,500,000**

*Implies a constant and continuous (non stop) supply of water flowrate. In reality, the City of Eunice Municipal Water Authority needs to supply water at a flowrate of 375 gpm to the facility to support the fire tank water replenishment as discussed in Section 7.5.1.1.1 of the SAR. Thus, at 375 gpm, the daily water usage can be replenished in approximately 2.0 hours (i.e., [43,000 gallons] / [375 gal/min] / [60 min/hr] = 1.9 hours).

Table 3.5-4 Deleted

Table 3.5-5 Deleted

Table 3.5-6 Deleted

User System Design Duties	
HVAC Systems	12,207.5 kW (11580 Btu/s)

Table 3.5-7 Centrifuge Cooling Water Distribution System Design Parameters

Centrifuge Cooling Tower Water Supply Loop Circulation Rate	467 L/s (7400 gpm)
Centrifuge Cooling Tower Water Supply Loop Temperature	TBD
Centrifuge Cooling Tower Water Return Loop Temperature	TBD
Centrifuge Cooling Water Distribution Loop Circulation Rate	156 L/s (2467 gpm), per 2 Cascade Halls 78 L/s (1233 gpm), per Cascade Hall
Centrifuge Cooling Water Distribution Loop Supply Temperature	TBD
Centrifuge Cooling Water Distribution Loop Return Temperature	TBD
Centrifuge Cooling Water Temperature Control Range	TBD

Table 3.5-8 Nitrogen System Design Parameters

Liquid Nitrogen Storage Capacity	3 Storage Tanks, each at 34069 L, (9000 gal) near TSB/CRDB and SBMs). 1 Storage Tank at 22712 L, (6000 gal) near CAB.
Liquid Nitrogen Supply Rate	0.315 L/s (5 gpm)
Liquid Nitrogen Supply Pressure	3.1 barg (45 psig)
Gaseous Nitrogen Supply Rate	283m^3/hr (10,000 scfh) – TSB/CRDB and SBMs 567 m^3/hr (20,000 scfh) - CAB
Gaseous Nitrogen Supply Pressure	3 barg (43.5 psig) – TSB/CRDB and SBMs 8 barg (116 psig) - CAB
Nitrogen Maximum Particle Size	1.0 micron

Table 3.5-9 Liquid Effluent Collection and Treatment System, Collection Tanks

TANK	QUANTITY	SIZE L (gal)	CONTENTS
Spent Citric Acid Collection	1	1,325 (350)	Spent citric acid
Degreaser Water Collection	1	1,325 (350)	Used degreaser water
Miscellaneous Effluent Collection	1	1,325 (350)	Lab wastes, condensate, floor washings
Hand Wash/Shower Monitor (CRDB)	3	15,142 (4,000)	Water from the active areas hand washes and showers
Hand Wash/Shower Monitor (CAB)	1	2,744 (725)	Water from the CTF/PMF hand wash and shower

Table 3.5-10 Liquid Effluent Collection and Treatment System, Monitoring and Treatment Tanks

TANK	QUANTITY	SIZE L (gal)	PURPOSE
Precipitation Treatment	1	1,325 (350)	Receives and treats effluents from the Citric Acid Collection Tank, the Degreaser Water Collection Tank, and, the Miscellaneous Effluent Hold Tank.
Contaminated Effluent Hold	1	1,325 (350)	Receives effluent from the Precipitation Treatment Tank. Provides capacity for the effluent batches processed in the Precipitation Treatment Tank.
Evaporator/Dryer Feed	1	1,325 (350)	Receives effluent from the Contaminated Effluent Hold Tank. Provides holding capacity for the effluent batches to be processed in the Evaporator/Dryer. pH is adjusted (lowered) in this tank prior to evaporation / drying.
Distillate	1	1,325 (350)	Receives effluent from the Evaporator/ Dryer.
Treated Effluent Monitor	2	1,325 (350)	Receives effluent from Evaporator/Dryer Distillate Tank. Effluent is sampled and tested in these tanks prior to release to the TEEB or treatment in the polishing demineralizers.

Table 3.5-11 Items Processed in the Decontamination Workshop

Equipment	Typical Annual Quantities
Pump & Component Sets	300
Valves	60 valves
Sample Bottles	4500
Manifolds	118
Flexible Hoses	200
Chemical Trap Bodies	871
Transducers	148
Cylinder Seals	4 Baskets
Sludge Residue Buckets / Lids	44
Scrap Metal	60 Baskets
Scrap Plastic	11 Baskets
Scrap Pipe Work, Fittings, Connections	85 Baskets
Miscellaneous	10 Baskets

3.5.21 Section 3.5 Figures

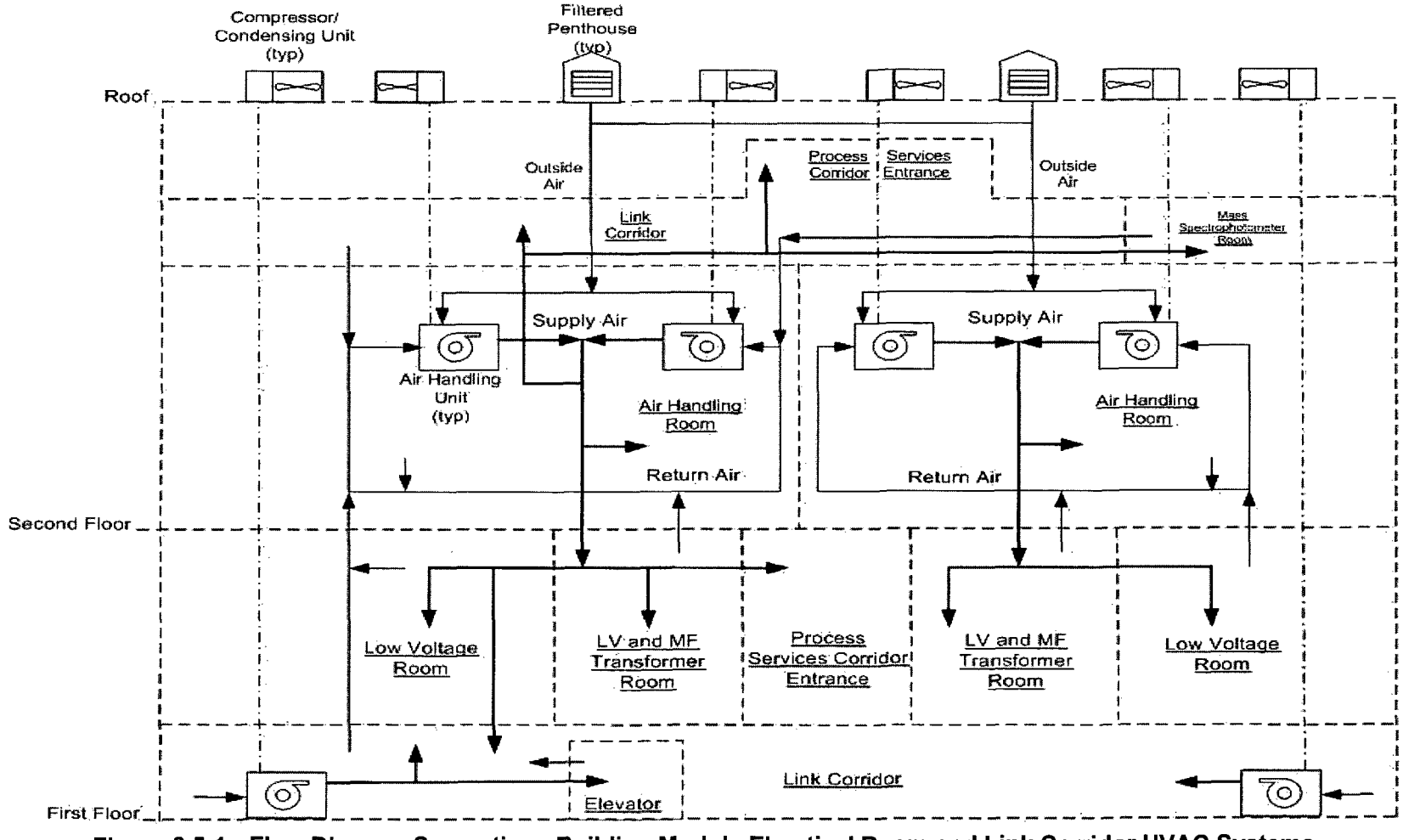

Figure 3.5-1 Flow Diagram Separations Building Module Elecrtical Room and Link Corridor HVAC Systems

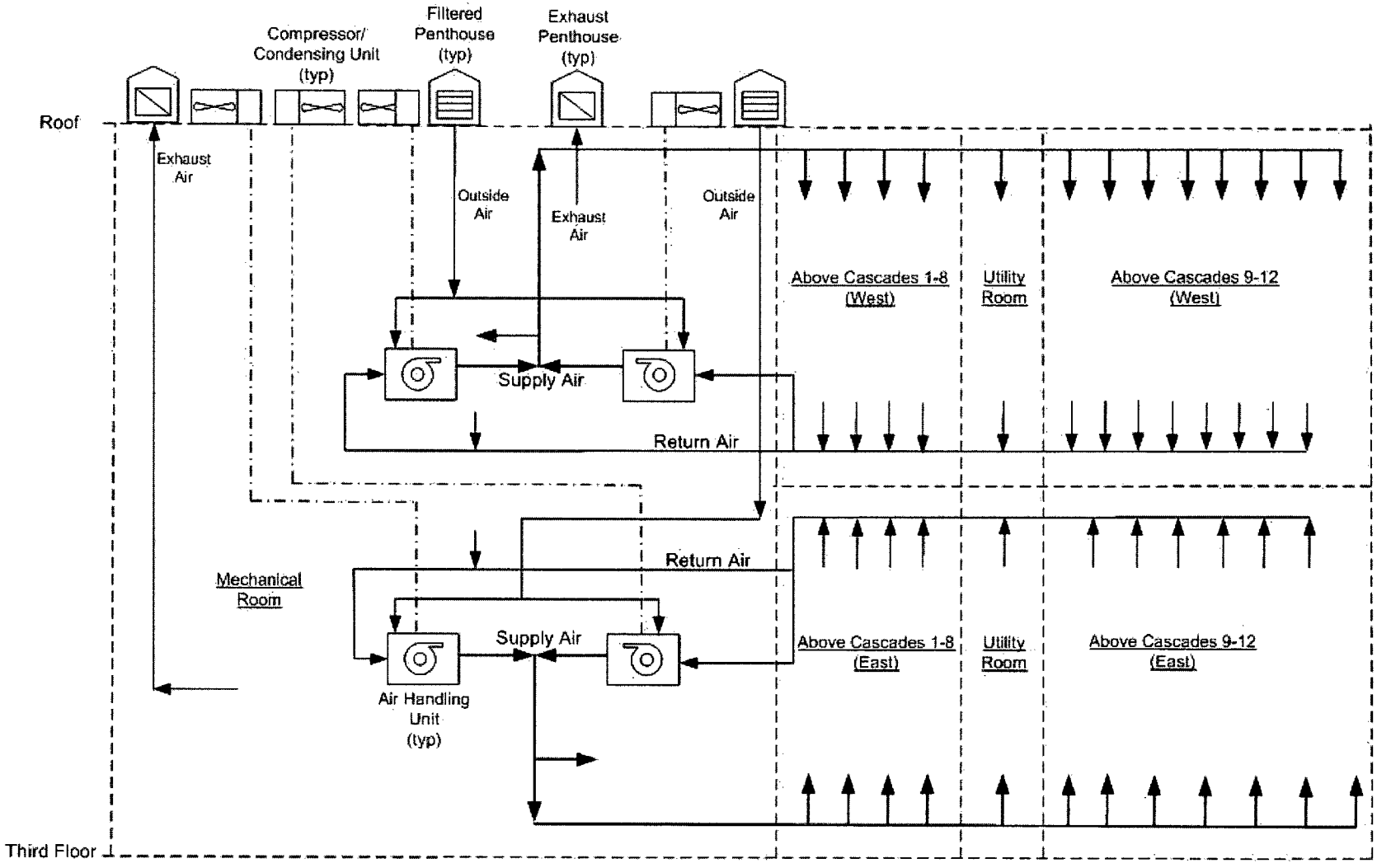

Figure 3.5-2 Flow Diagram Process Services Corridor Above Cascade HVAC System

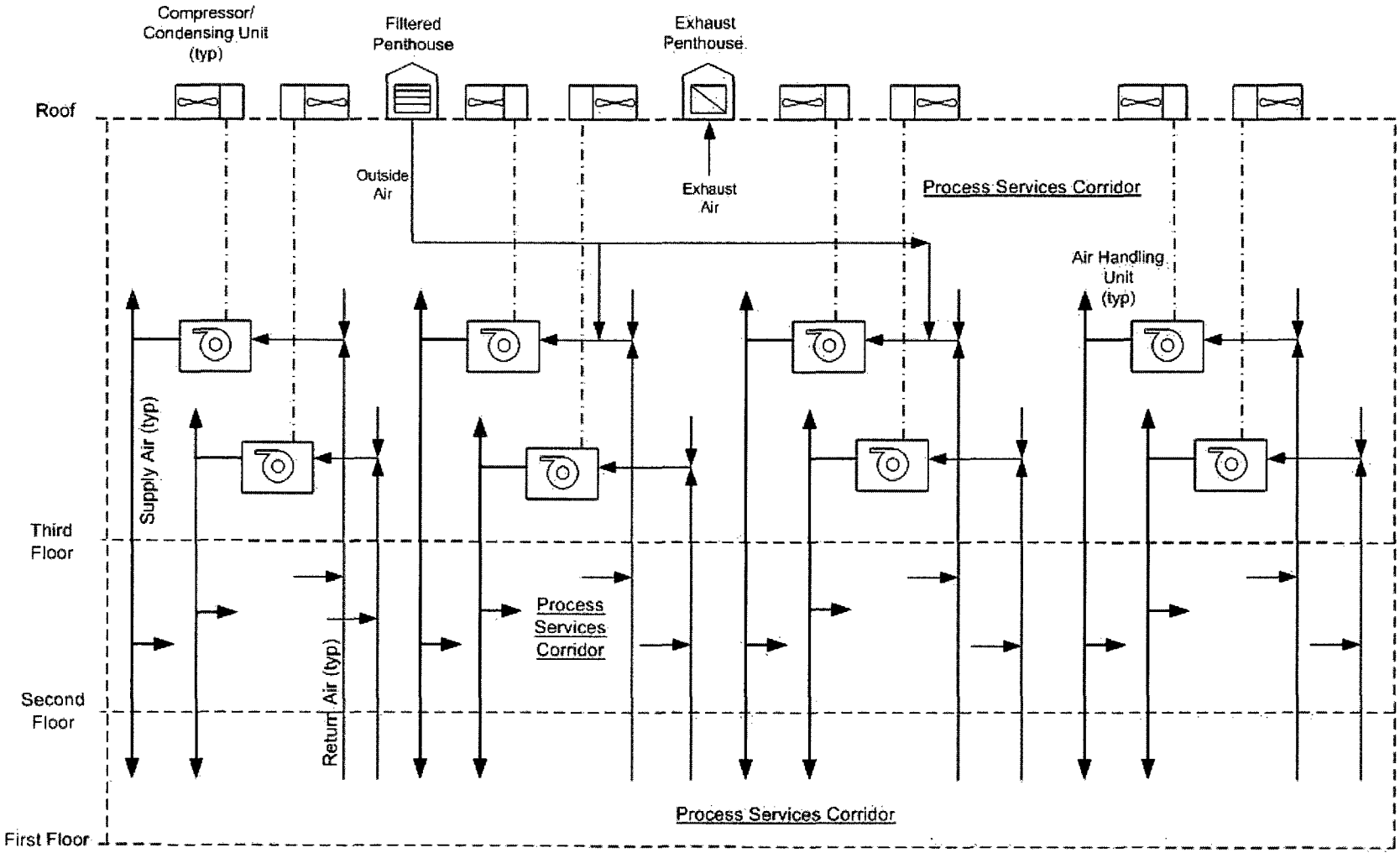

Figure 3.5-3 Flow Diagram Process Services Corridors First, Second and Third Floor HVAC System (Cascades 1-8) Sheet 1 of 2

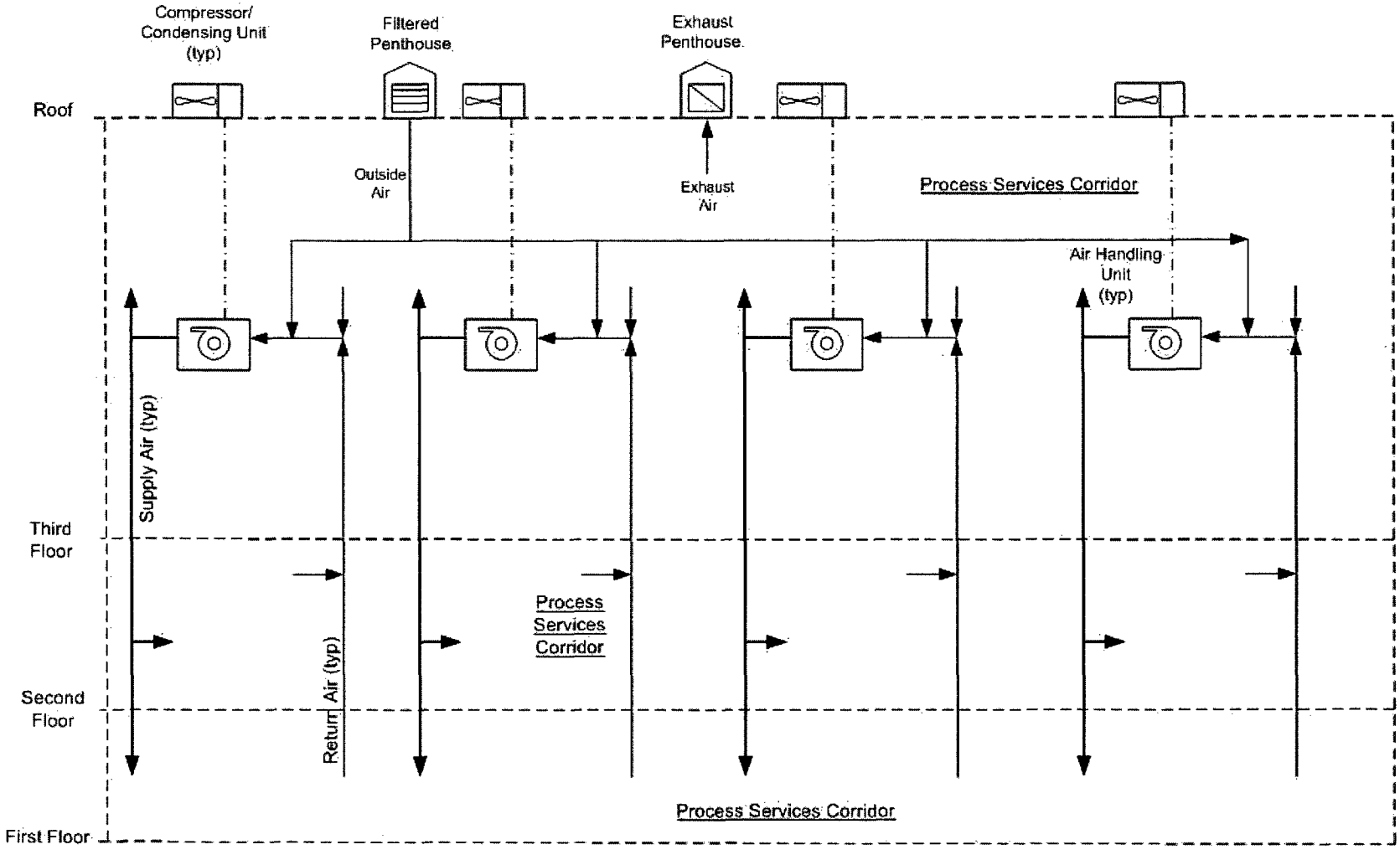

Figure 3.5-3 Flow Diagram Process Services Corridors First, Second and Third Floor HVAC System (Cascades 9-12) Sheet 2 of 2

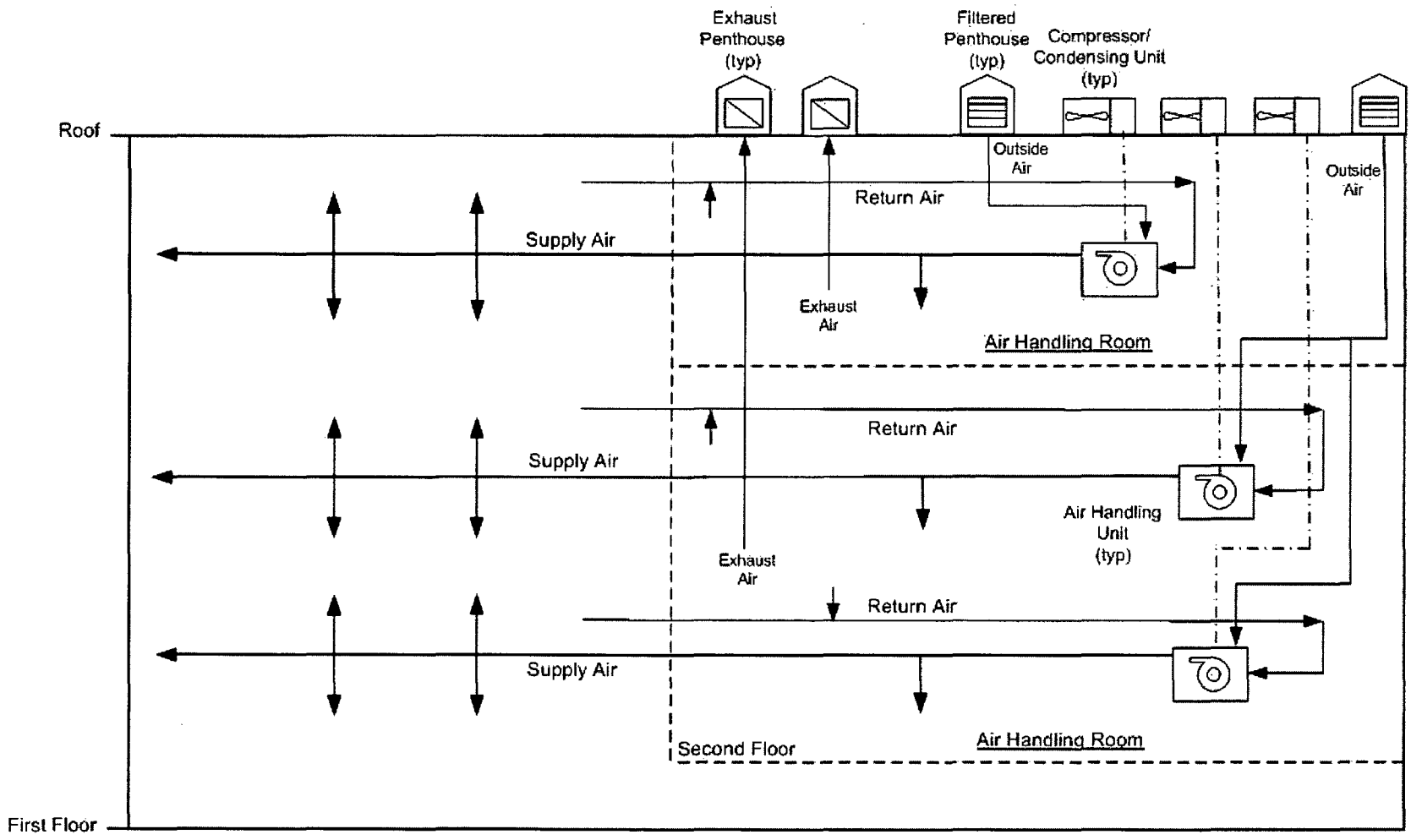

Figure 3.5-4 Flow Diagram UF_6 Handling Area/Blending and Sampling HVAC System

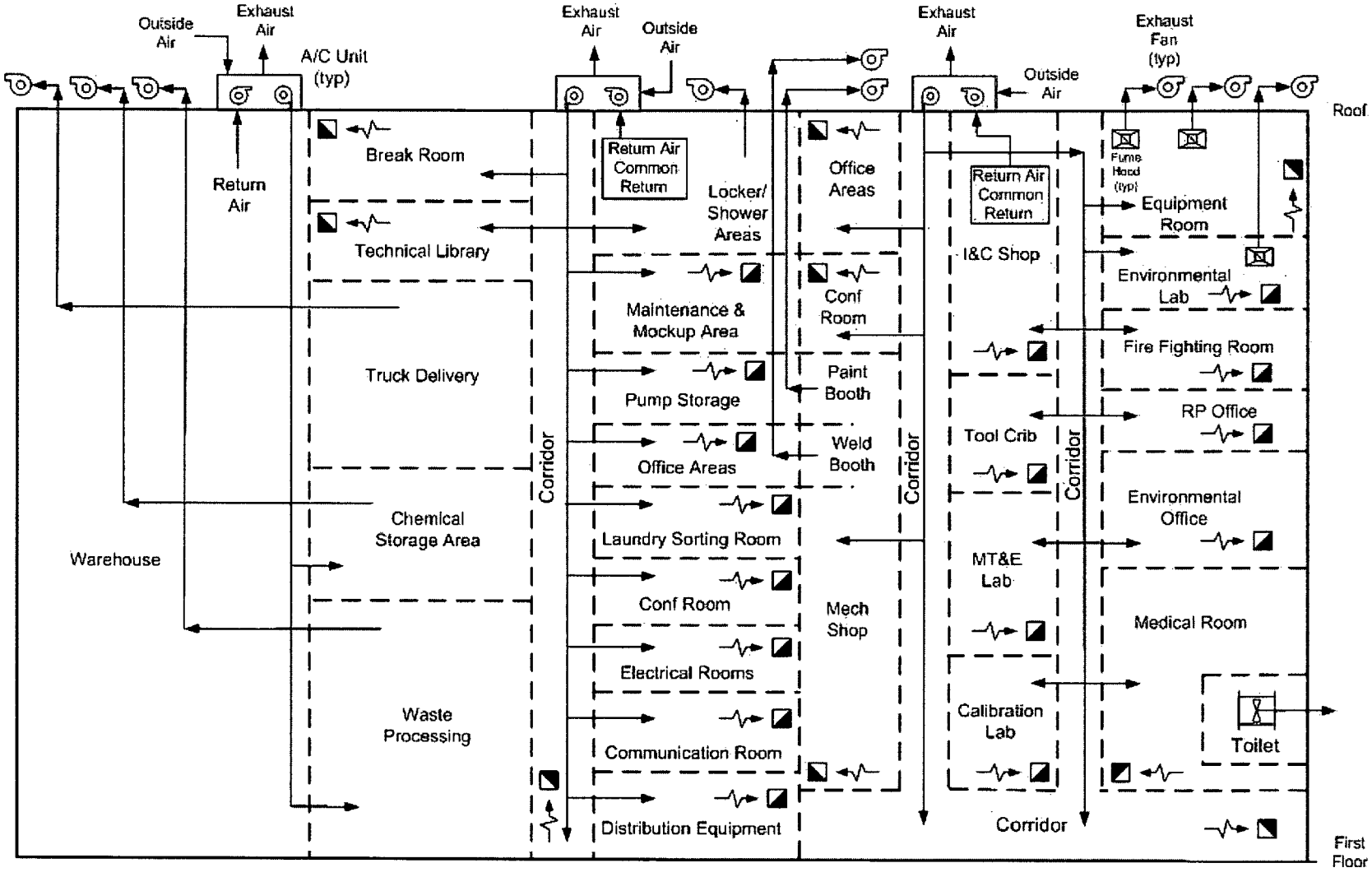

Figure 3.5-5 Flow Diagram TSB First Floor HVAC Systems

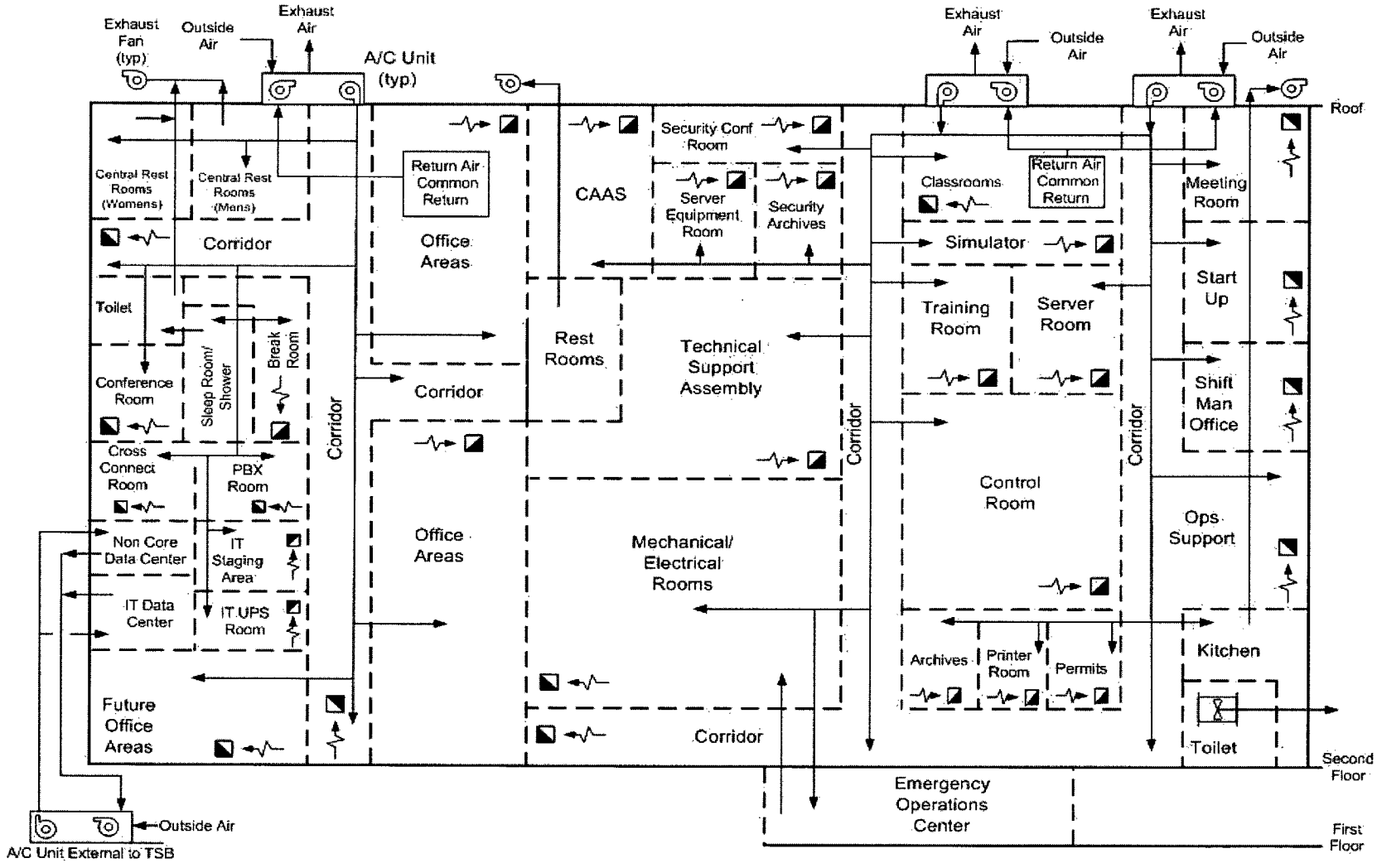

Figure 3.5-6 Flow Diagram TSB Second Floor HVAC Systems

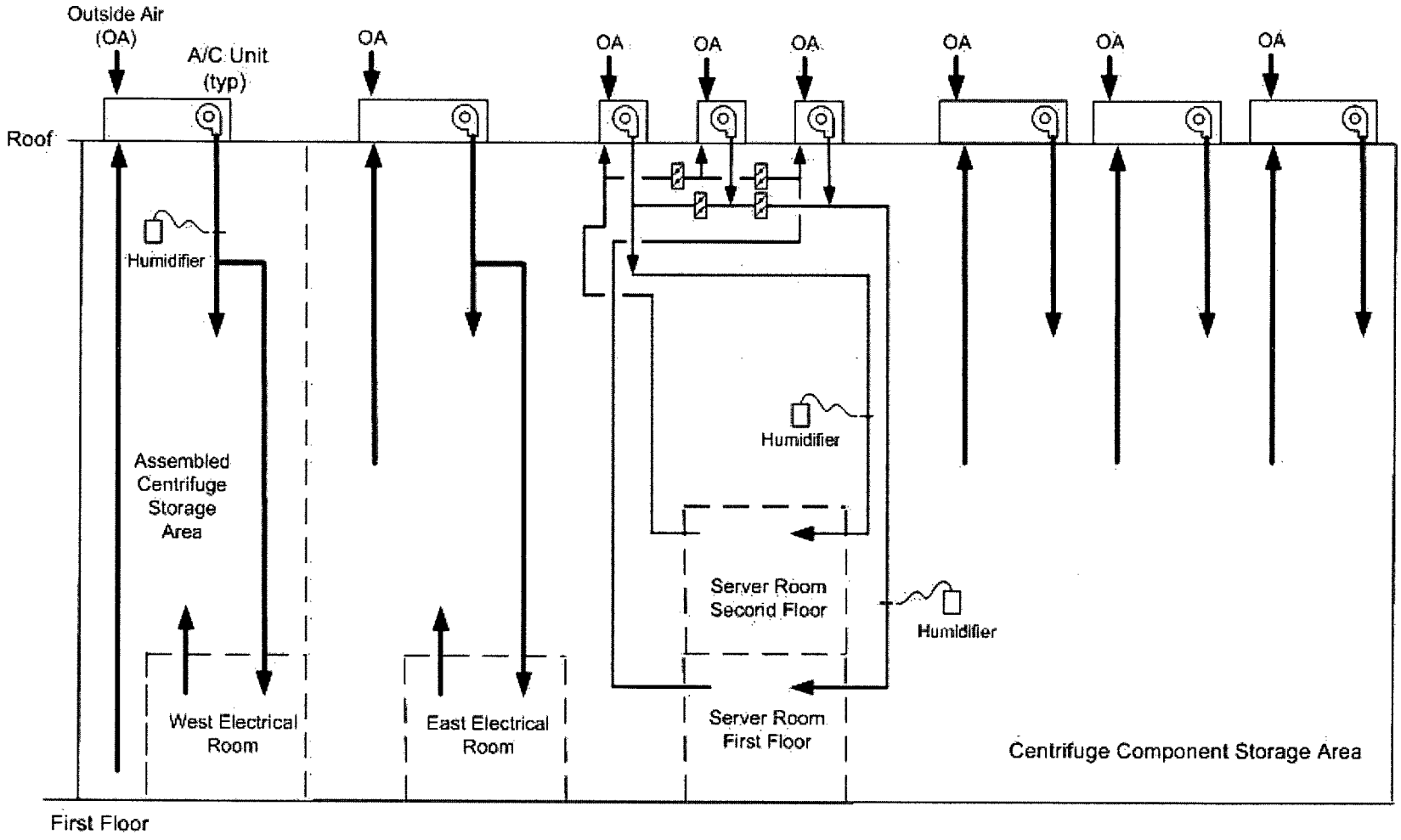

Figure 3.5-7 Flow Diagram CAB Centrifuge Component Storage Area, Assembled Centrifuge Storage Area and Server Room HVAC Systems

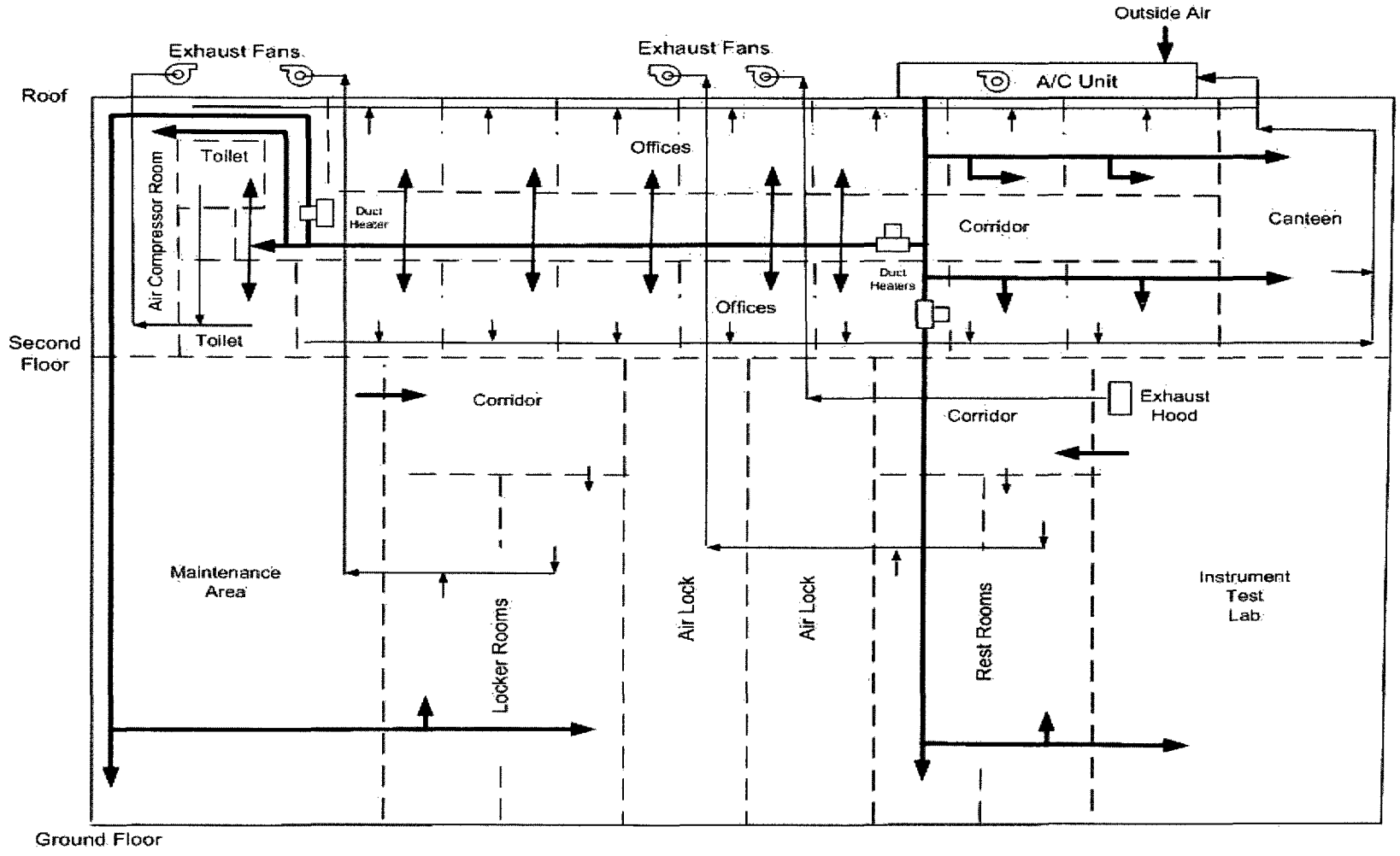

Figure 3.5-8 Flow Diagram CAB Offices and Miscellaneous Rooms HVAC System

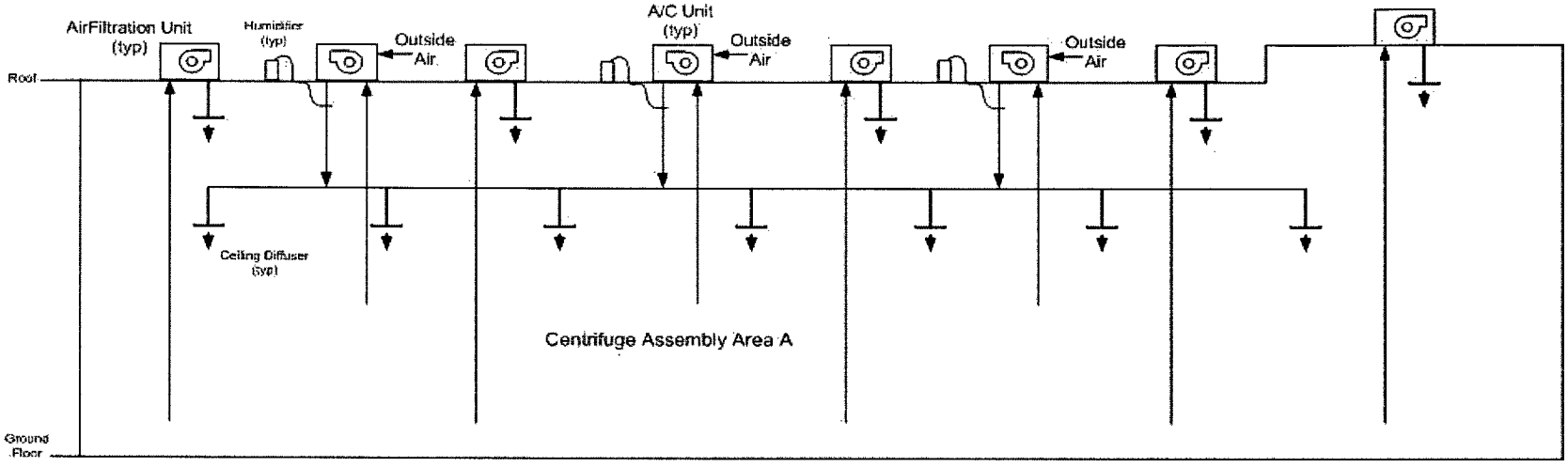

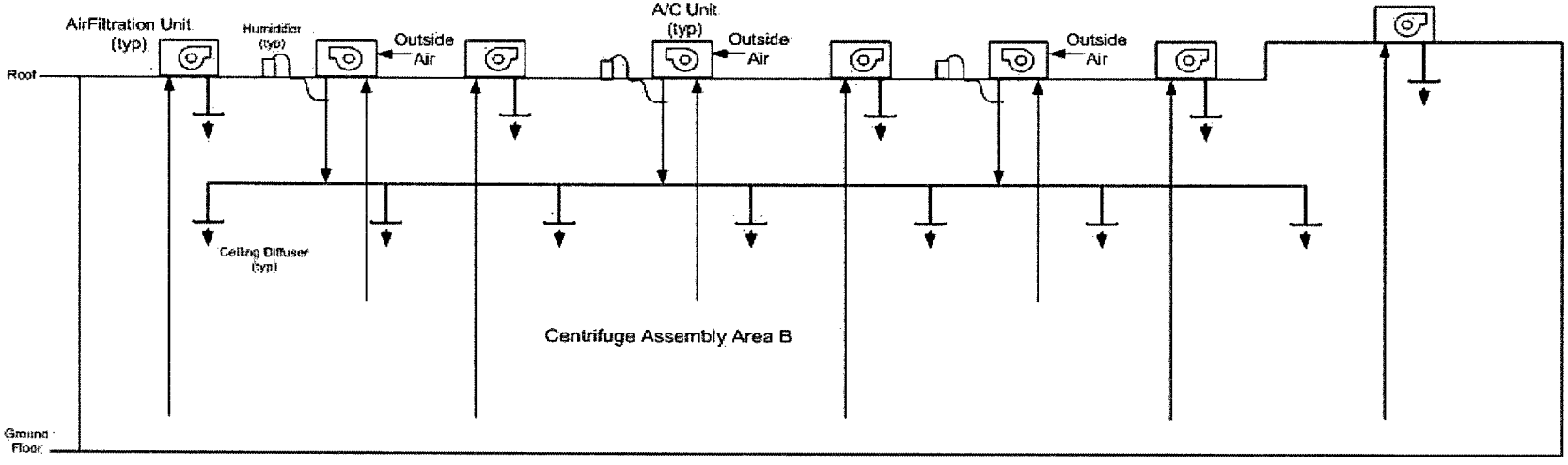

Figure 3.5-9 Flow Diagram Centrifuge Assembly Area HVAC System Sheet 1 of 2

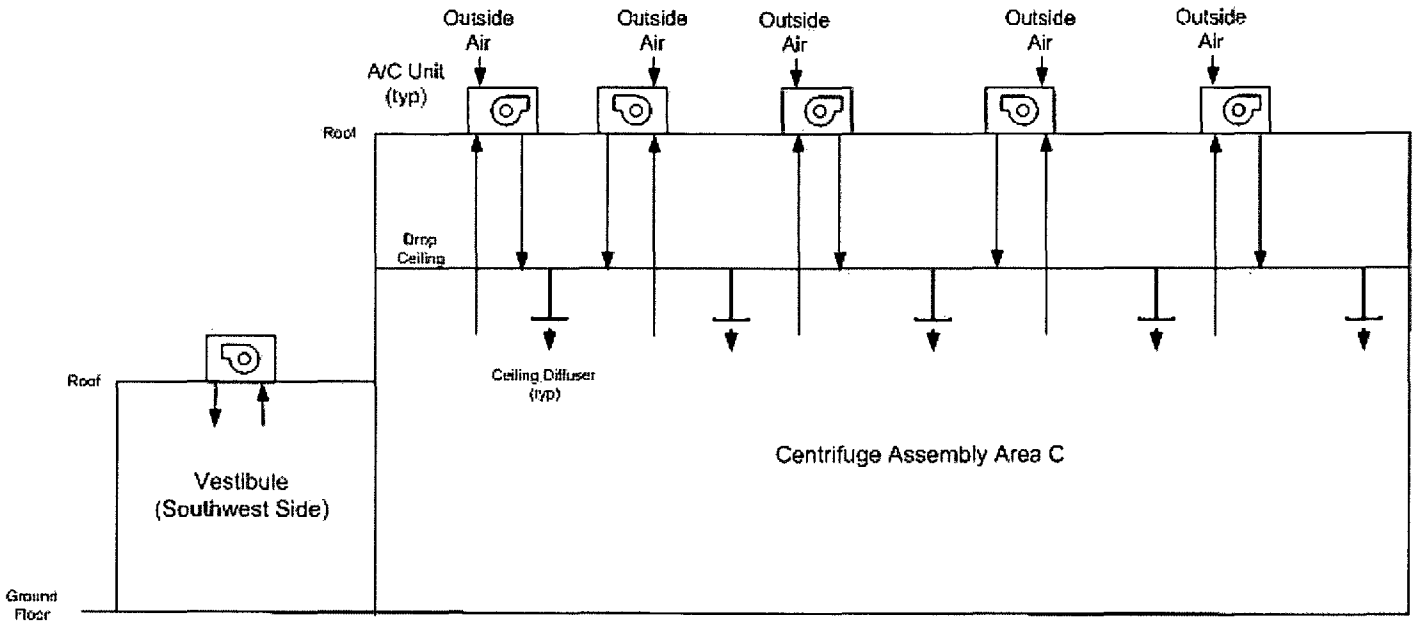

Figure 3.5-9 Flow Diagram Centrifuge Assembly Area HVAC System - Sheet 2 of 2

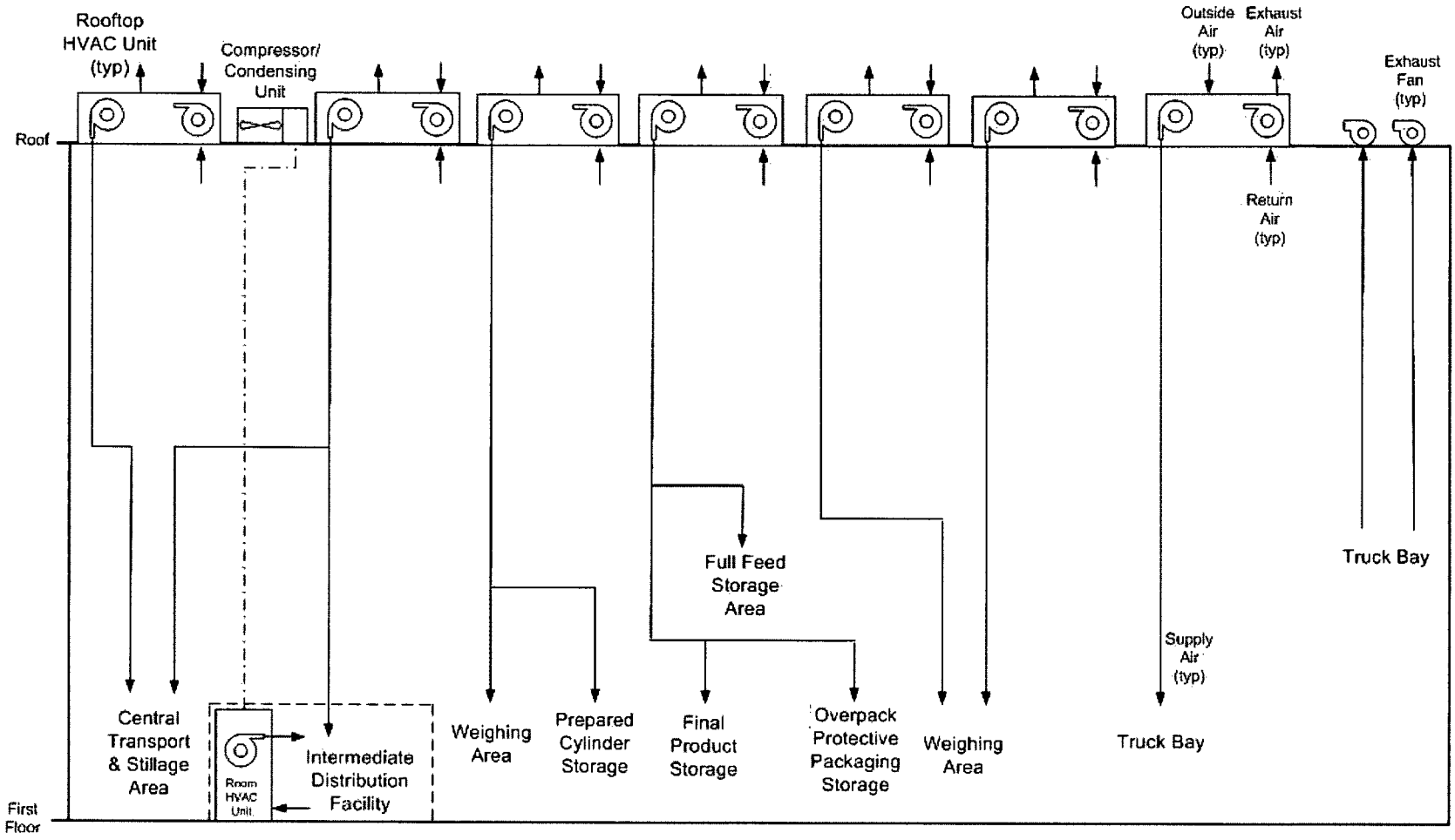

Figure 3.5-10 Flow Diagram CRDB Non-Bunkered Areas HVAC System

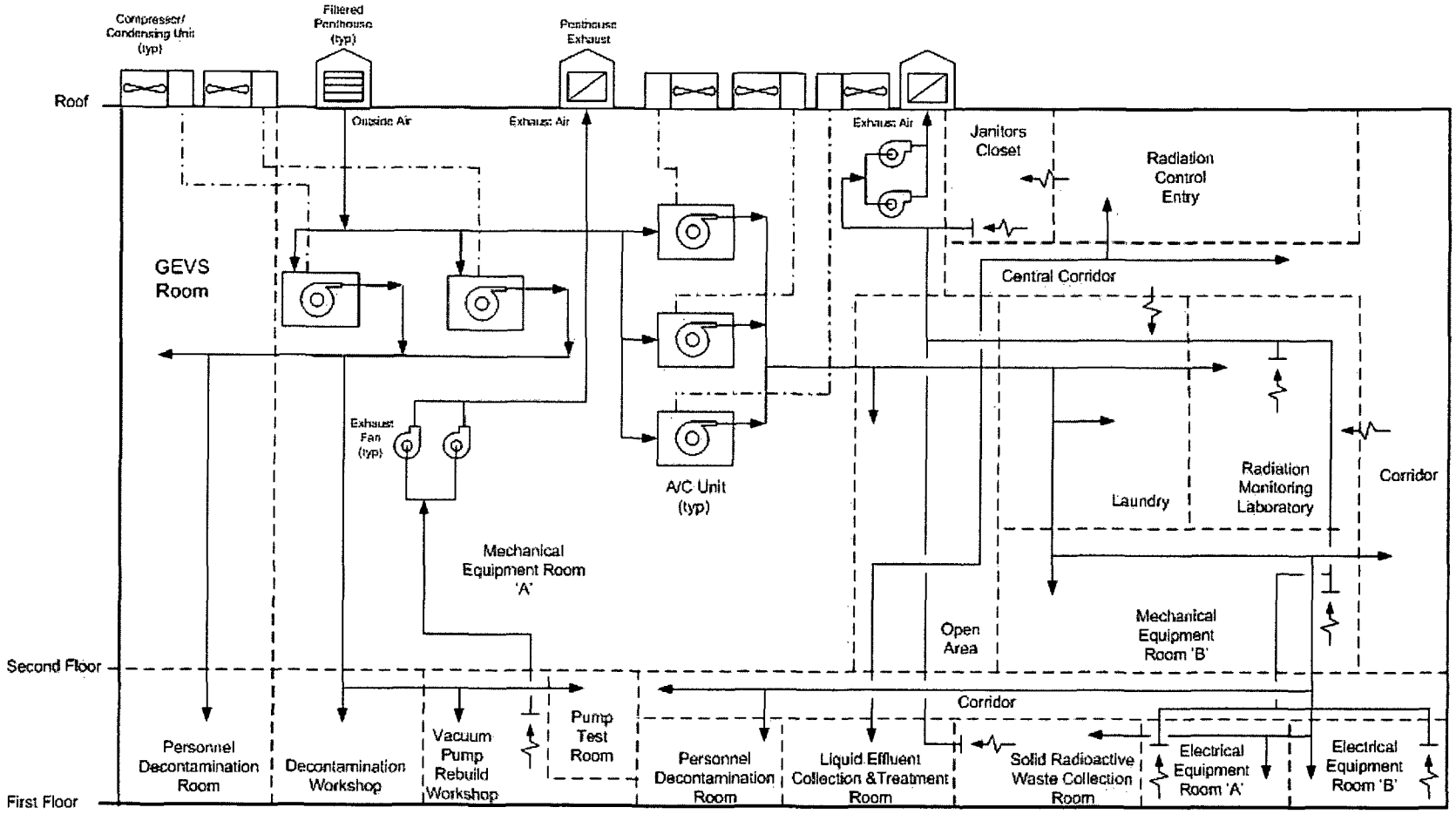

Figure 3.5-11 Flow Diagram CRDB Bunkered Areas HVAC System Sheet 1 of 2

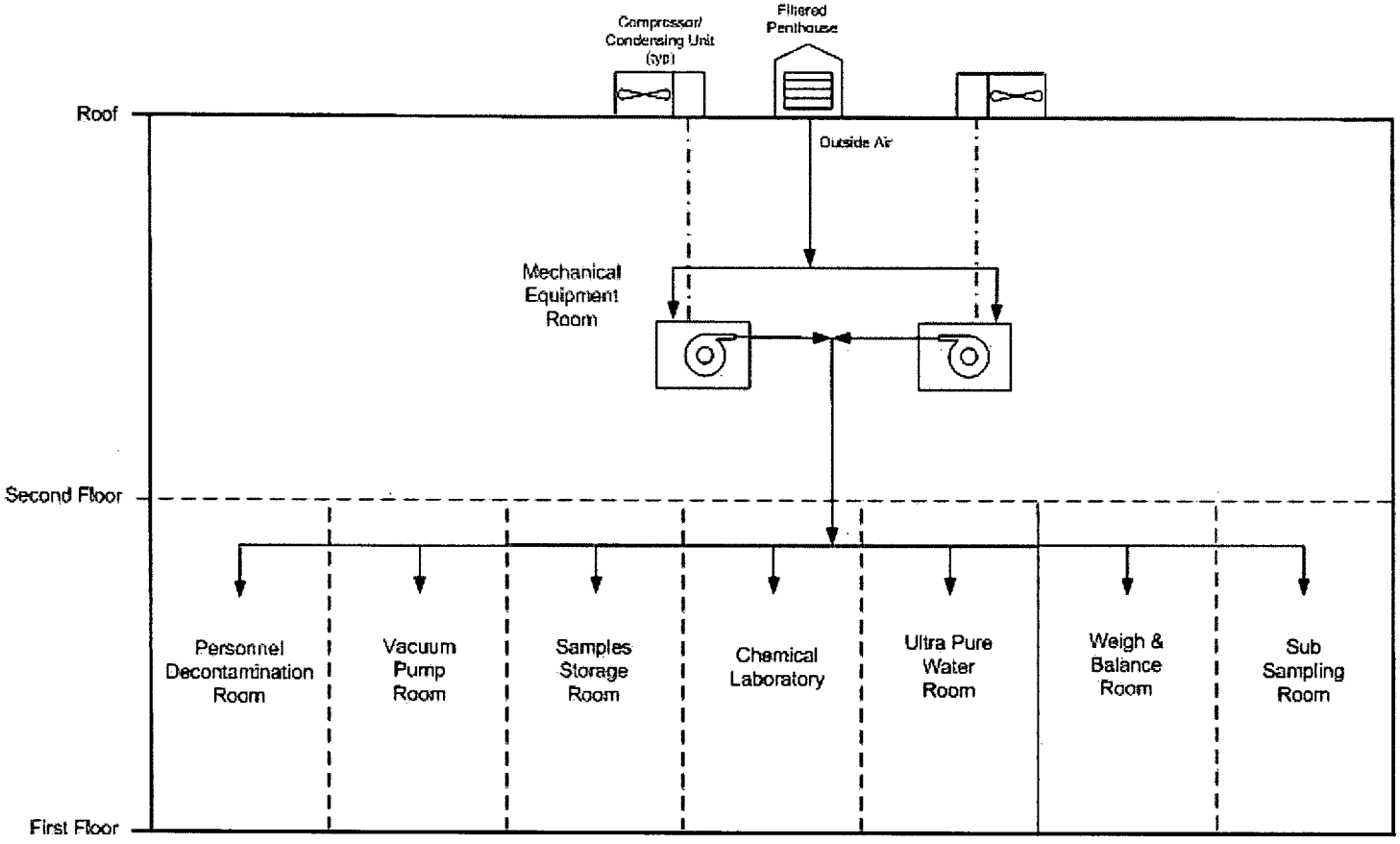

Figure 3.5-11 Flow Diagram CRDB Bunkered Areas HVAC System Sheet 2 of 2

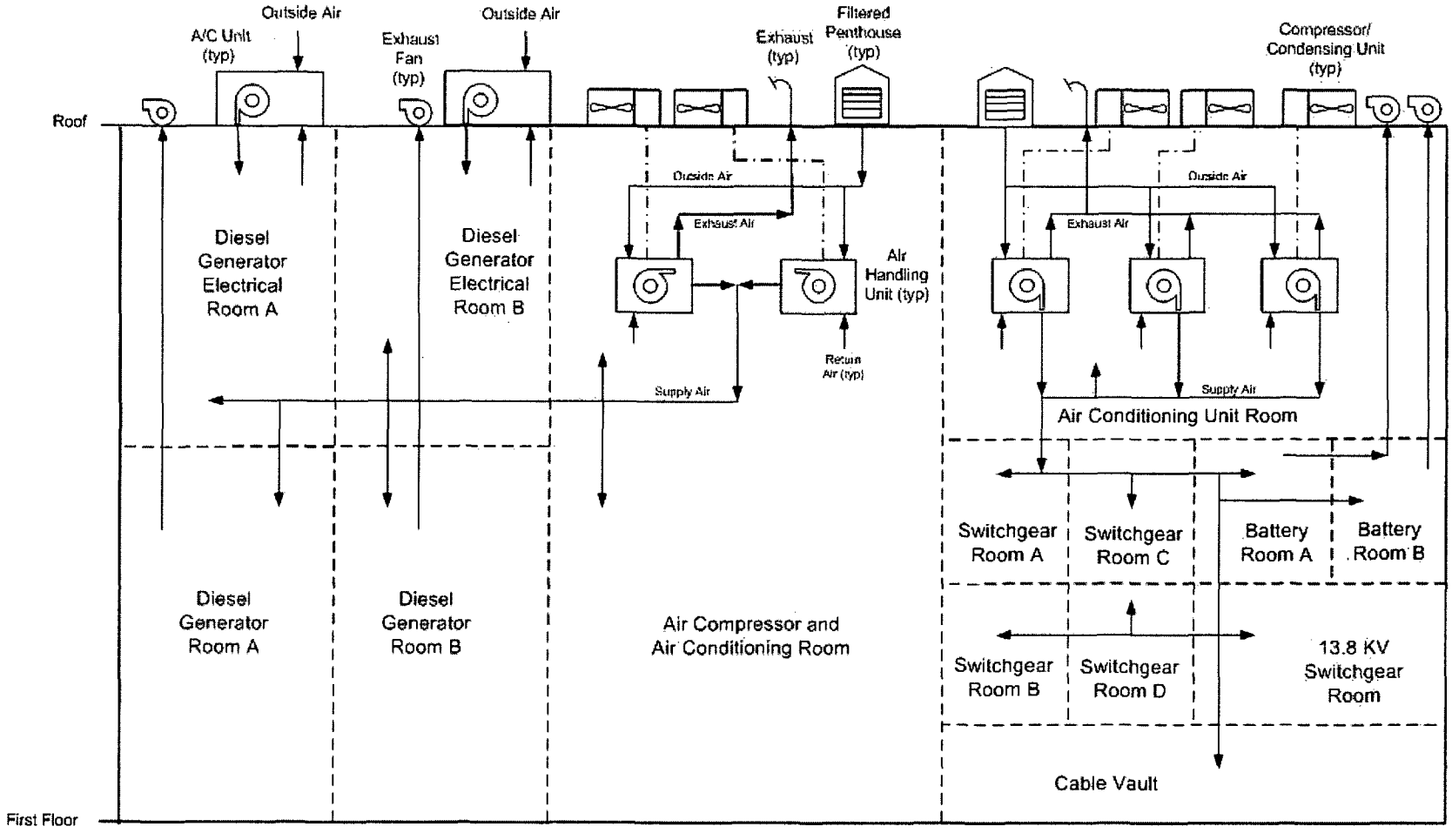

Figure 3.5-12 Flow Diagram Central Utilites Building HVAC System

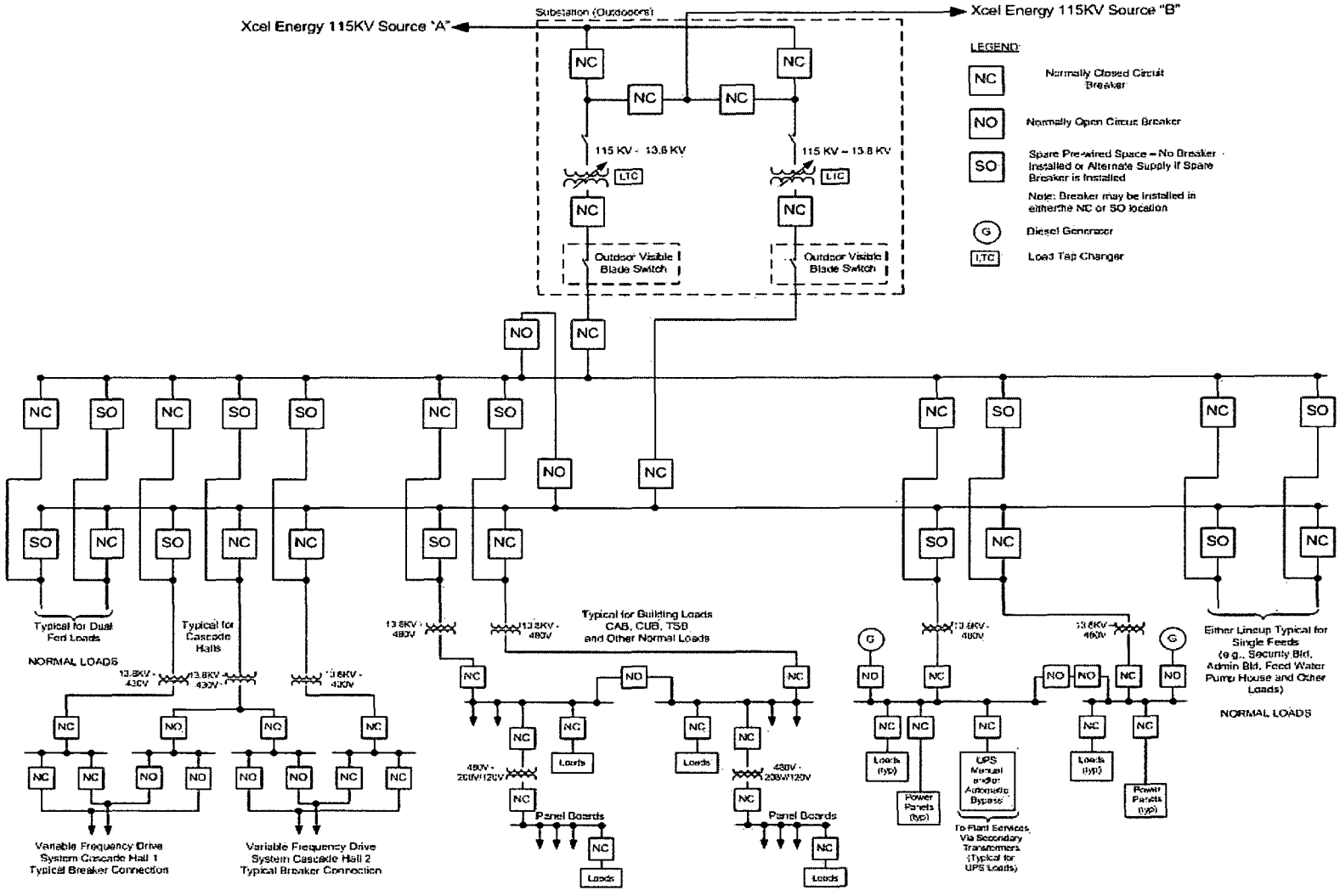

Figure 3.5-13 Single Line Diagram Electrical System

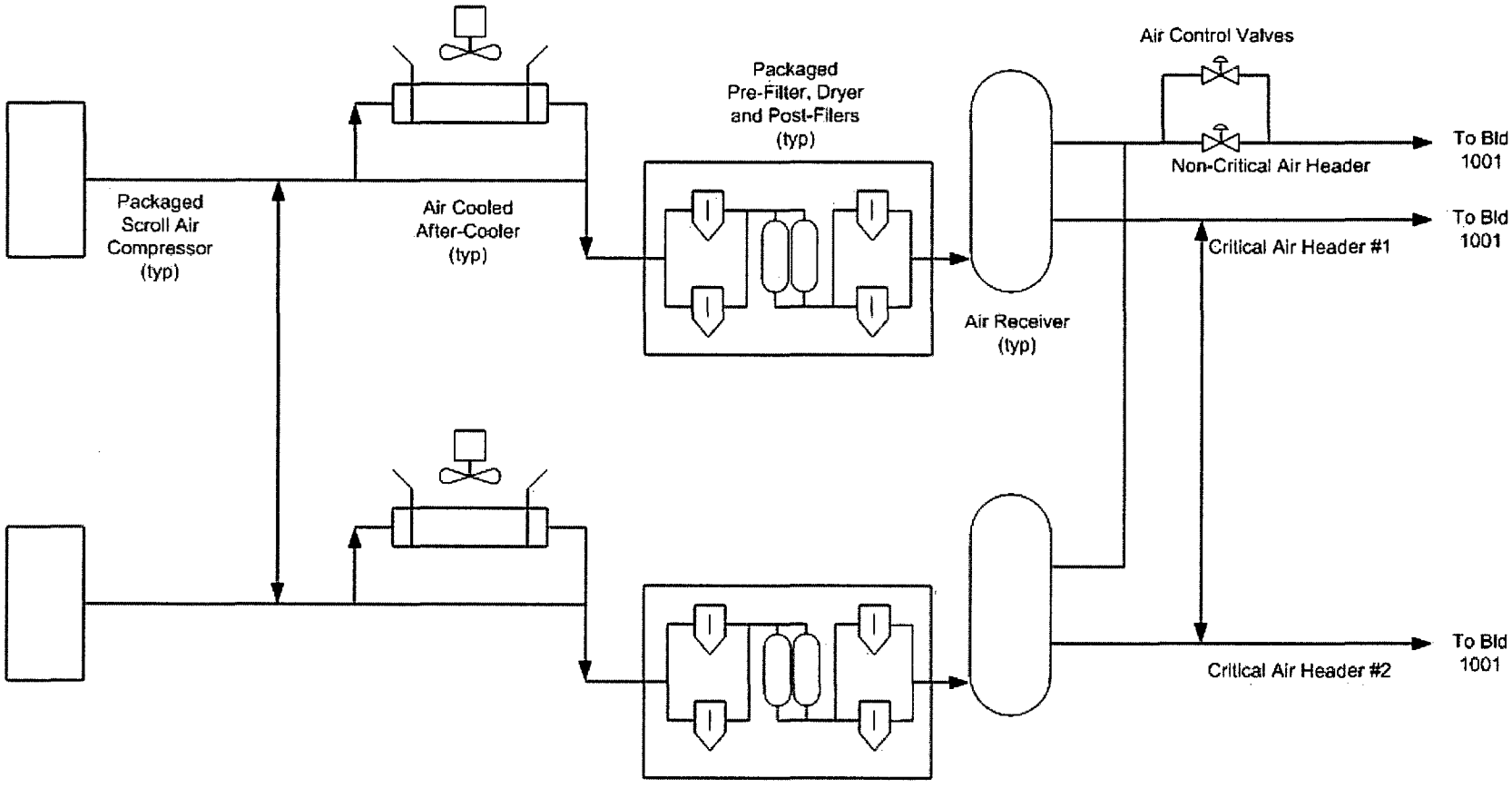

Figure 3.5-14 Process Flow Diagram Compresses Air System (Sheet 1 of 2)

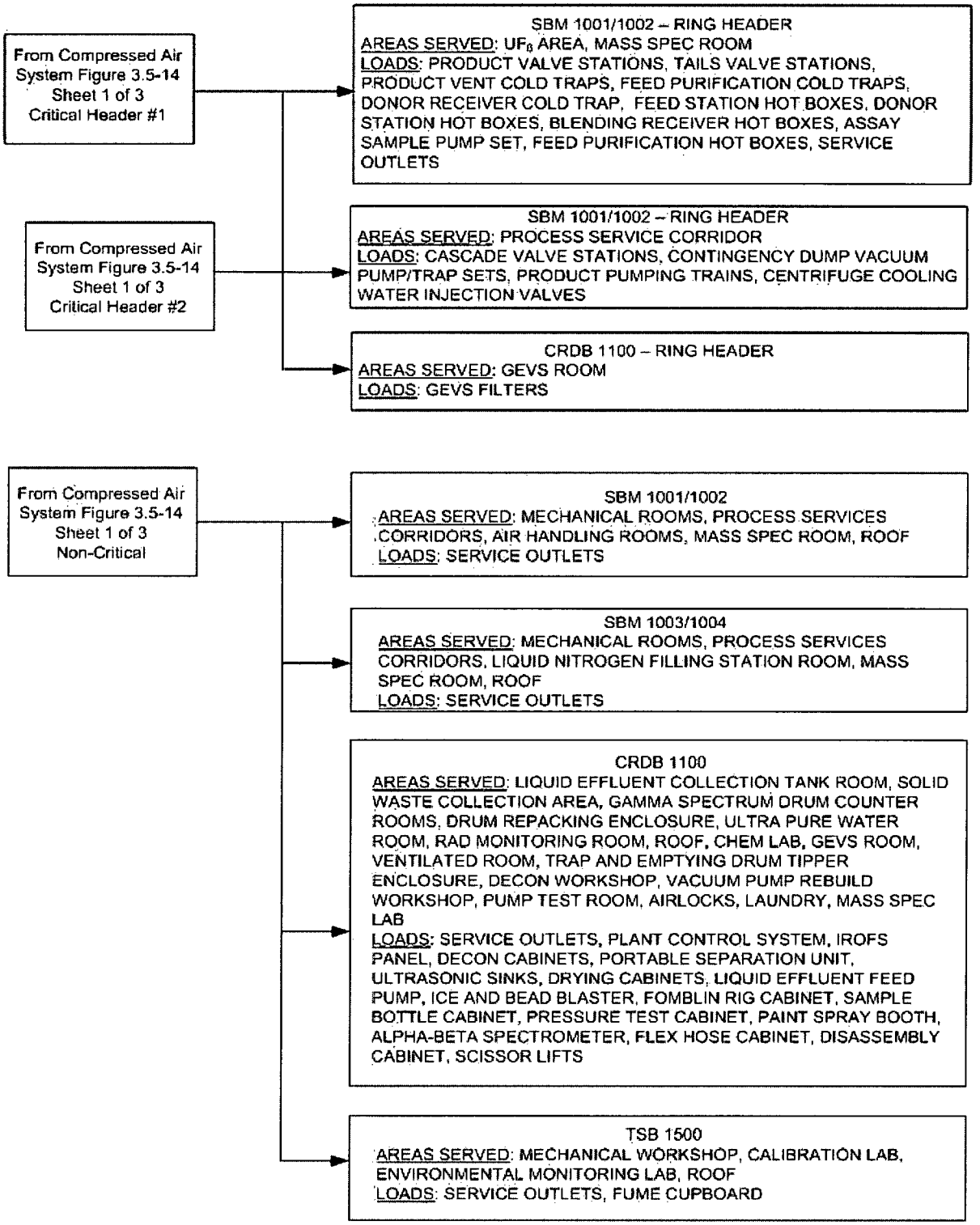

Figure 3.5-14 Process Flow Diagram Compressed Air System (Sheet 2 of 2)

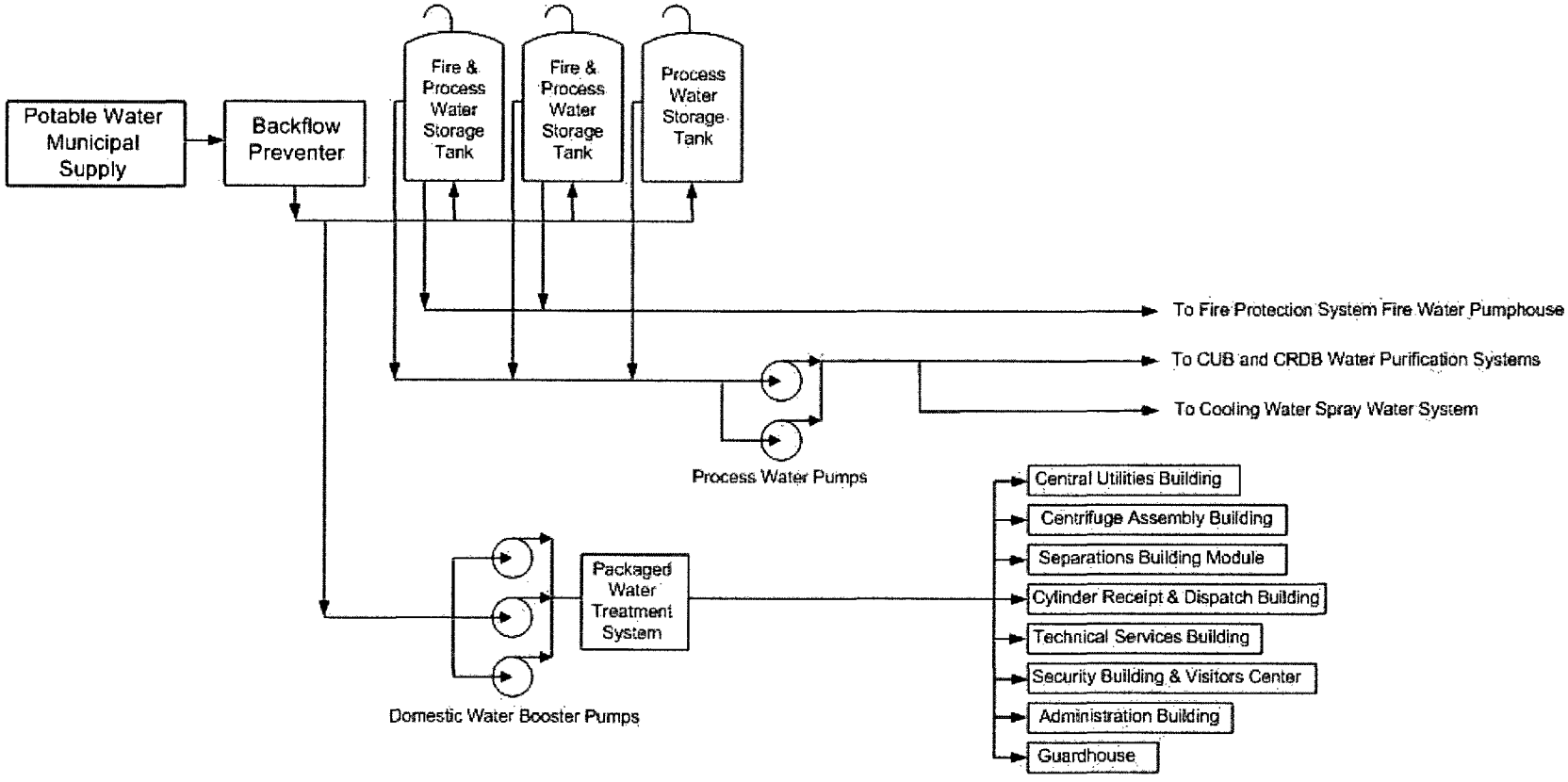

Figure 3.5-15 Process Flow Diagram Process Water Distribution System

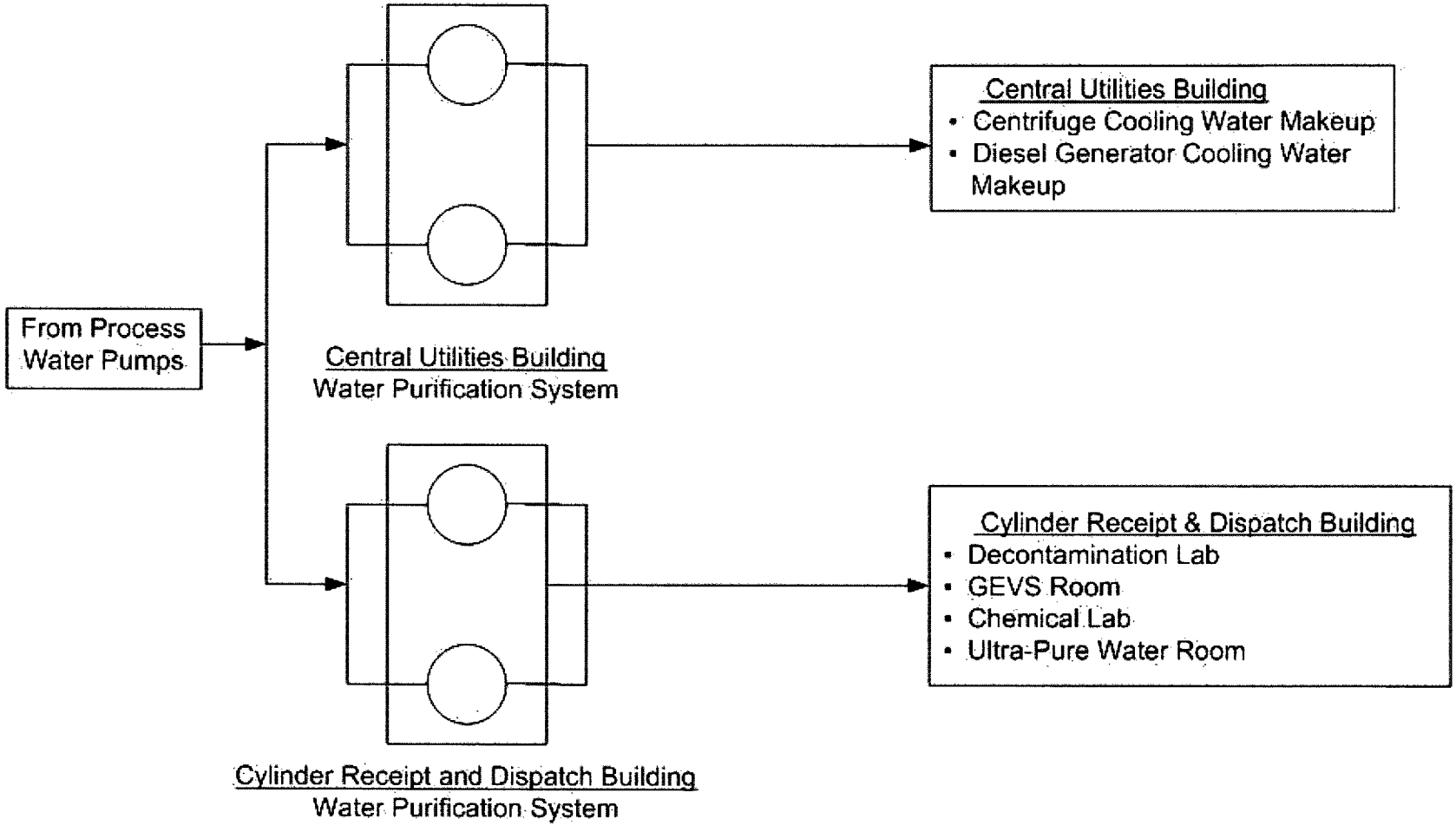

Figure 3.5-16 Process Flow Diagram Process Water Distribution System

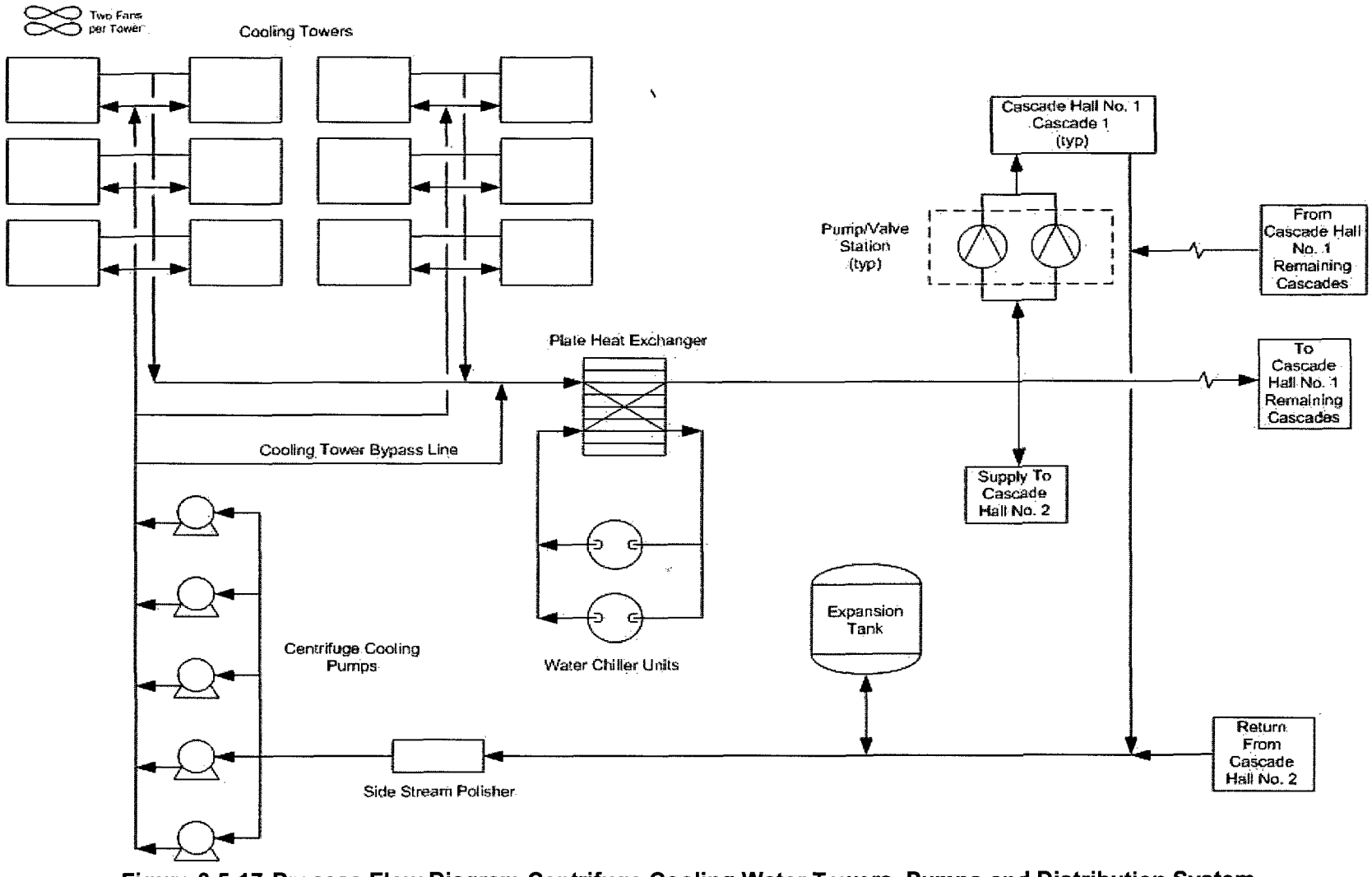

Figure 3.5-17 Process Flow Diagram Centrifuge Cooling Water Towers, Pumps and Distribution System

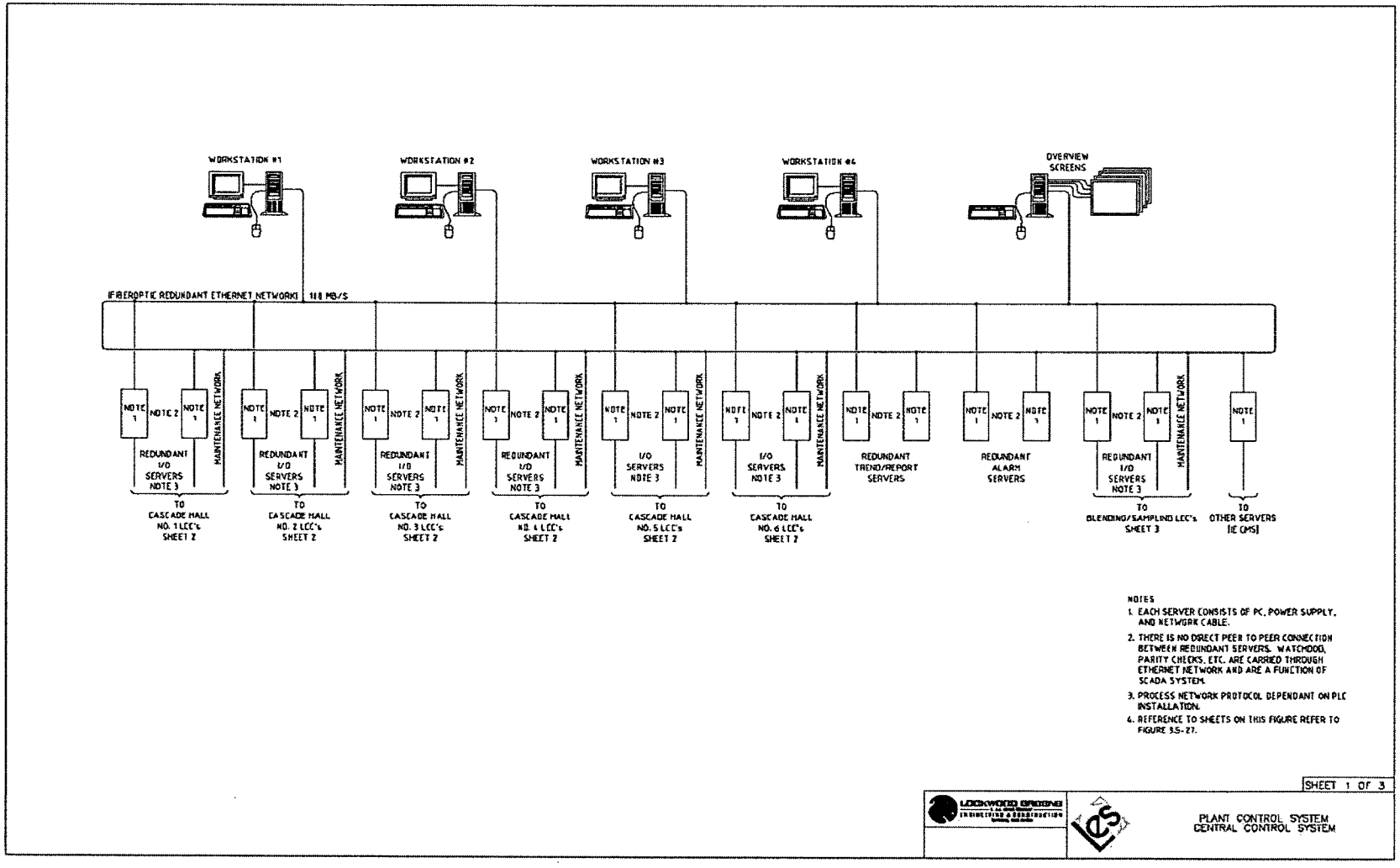

Figure 3.5-18 Plant Control System Central Control System (Sheet 1 or 3)

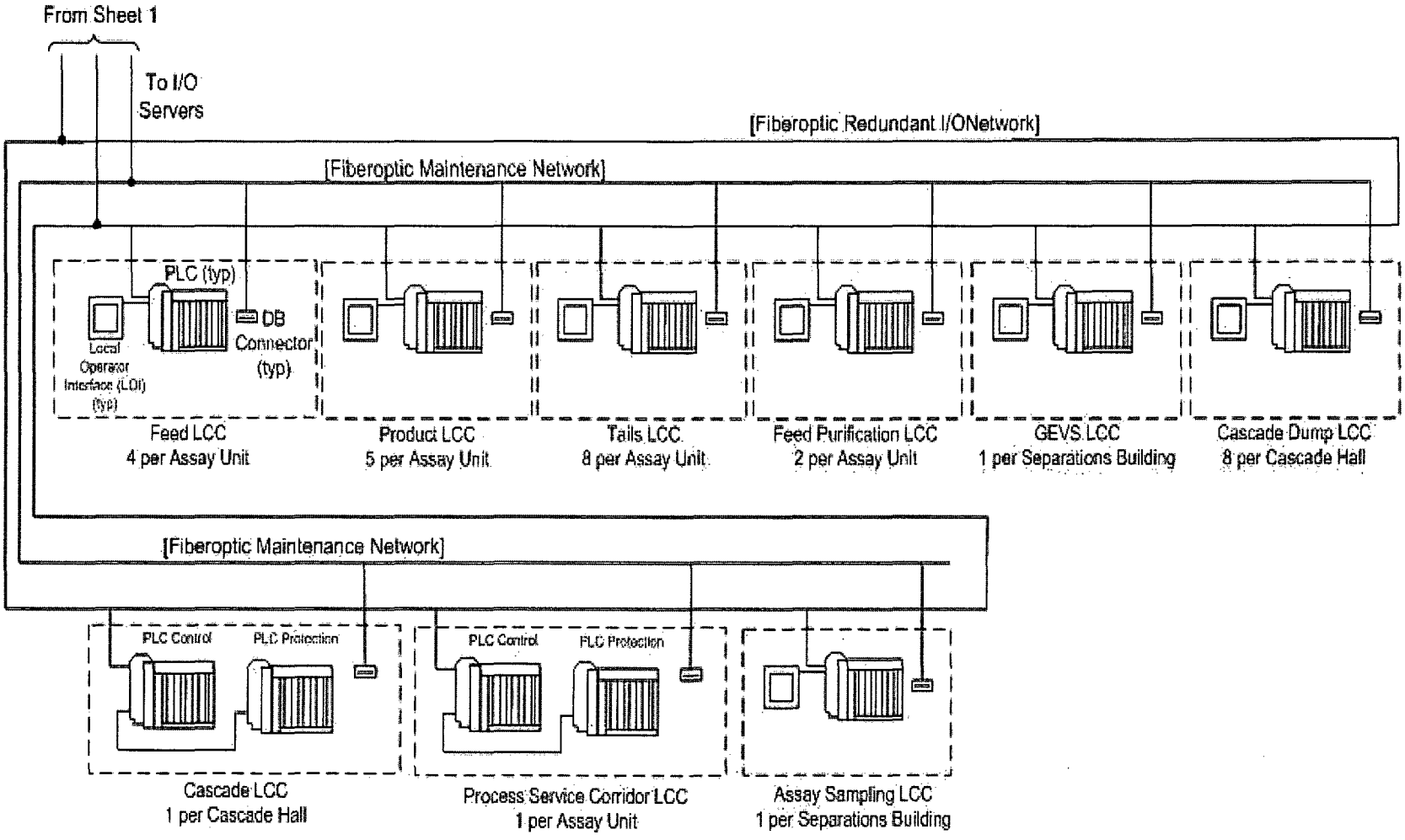

Figure 3.5-18 Plant Control System Local Control System (Sheet 2 of 3)

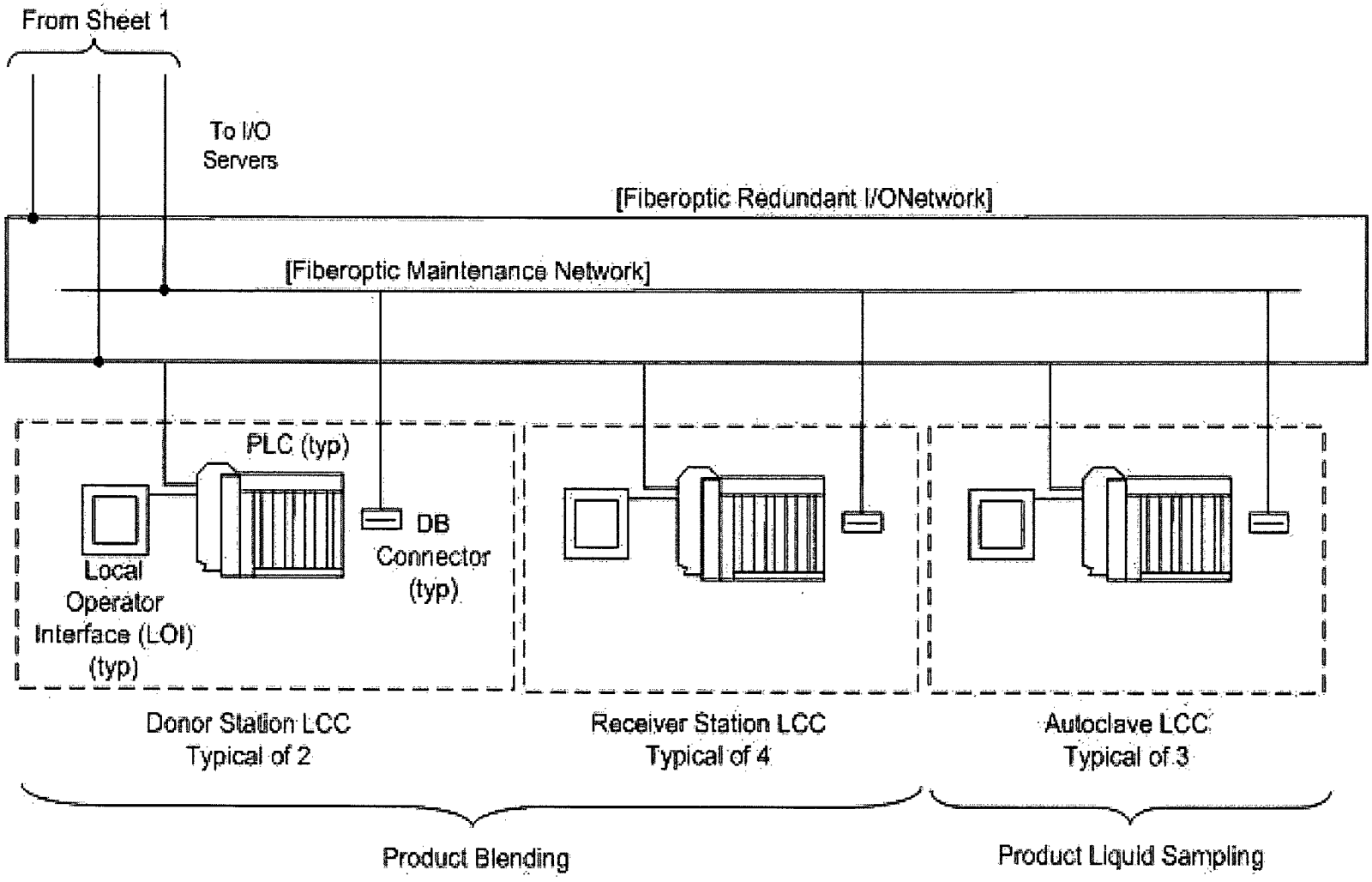

Figure 3.5-18 Plant Control System Central Control System (Sheet 3 of 3)

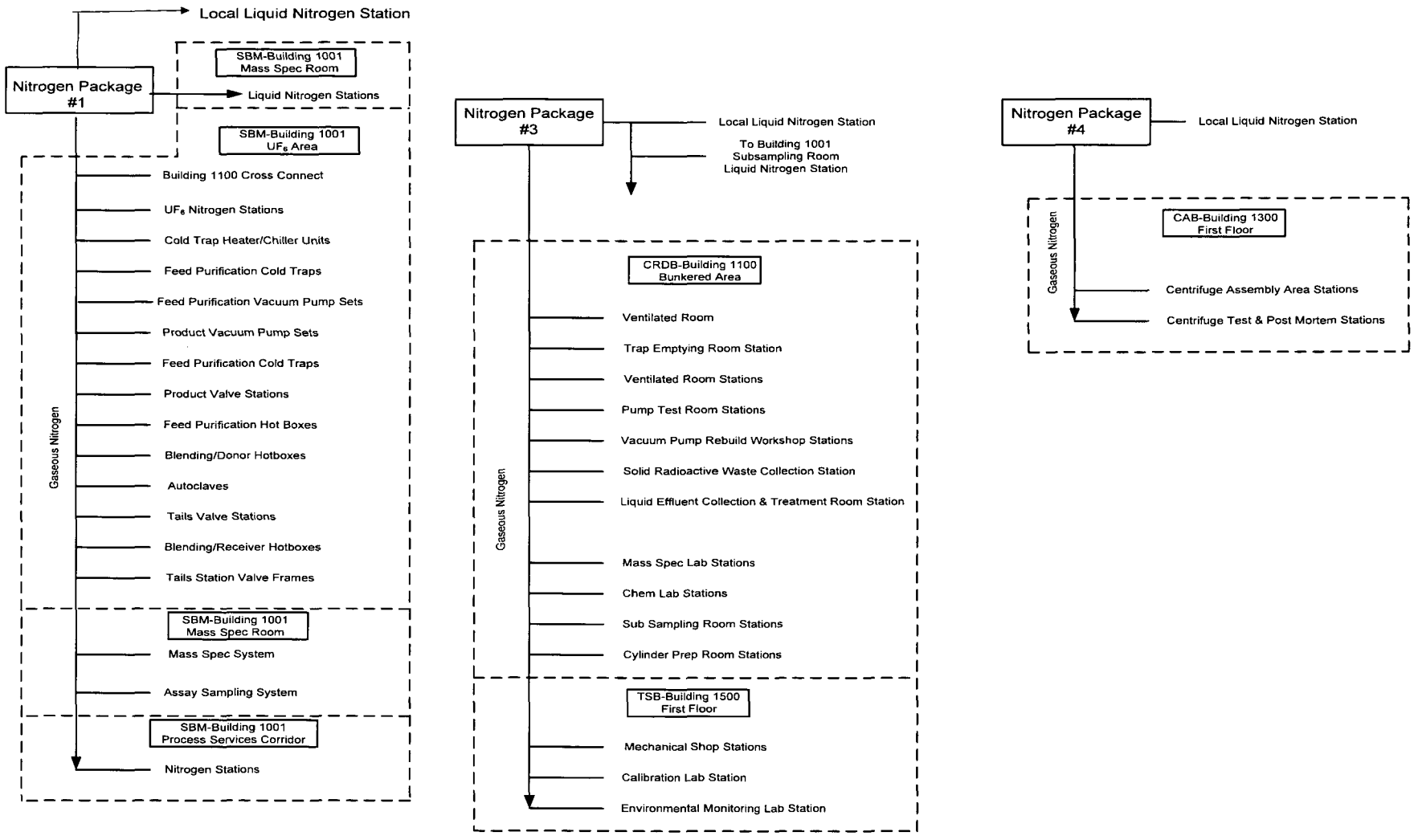

Figure 3.5-19 Process Flow Diagram Nitrogen System

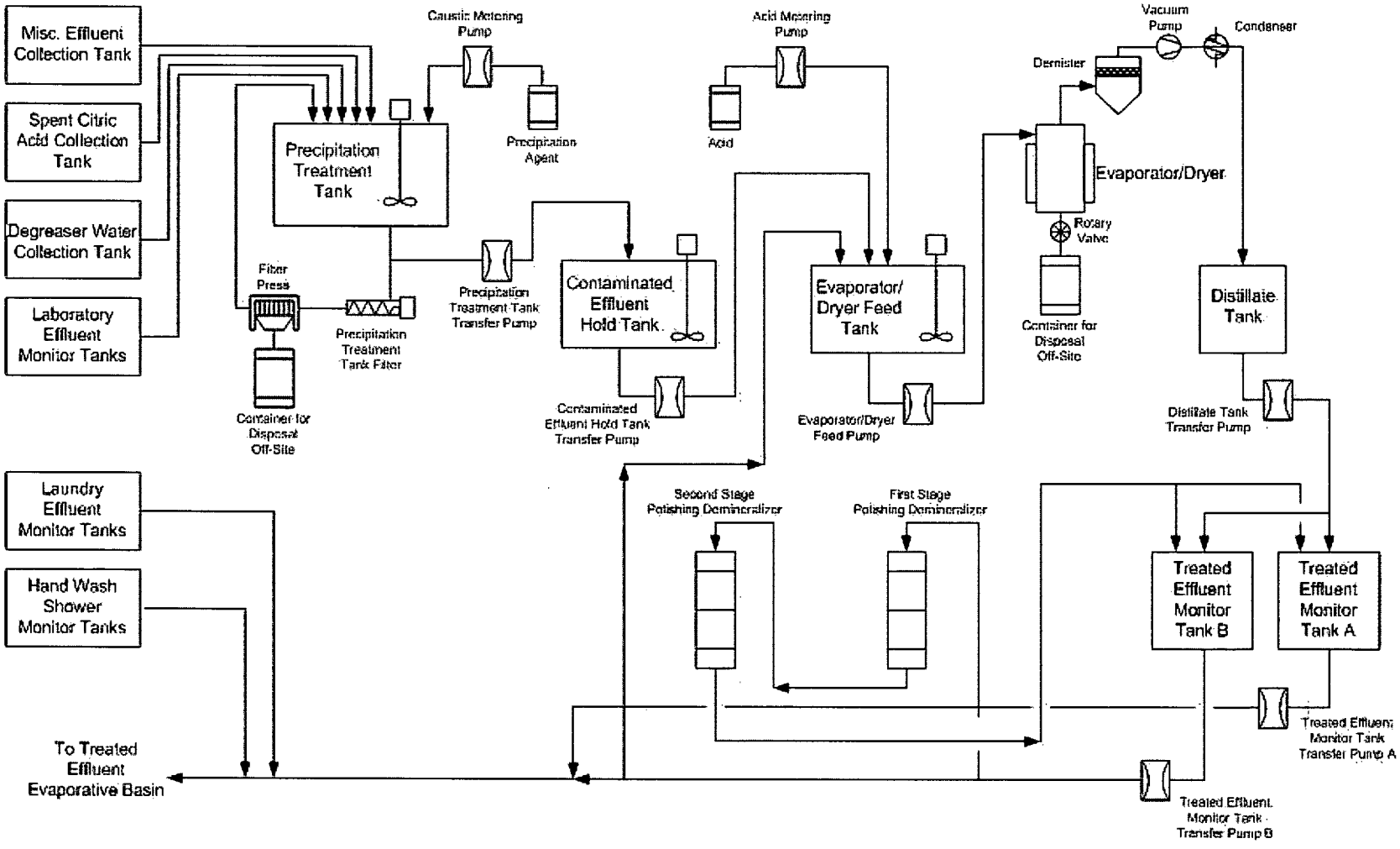

Figure 3.5-20 Process Flow Diagram Precipitation/Treatment

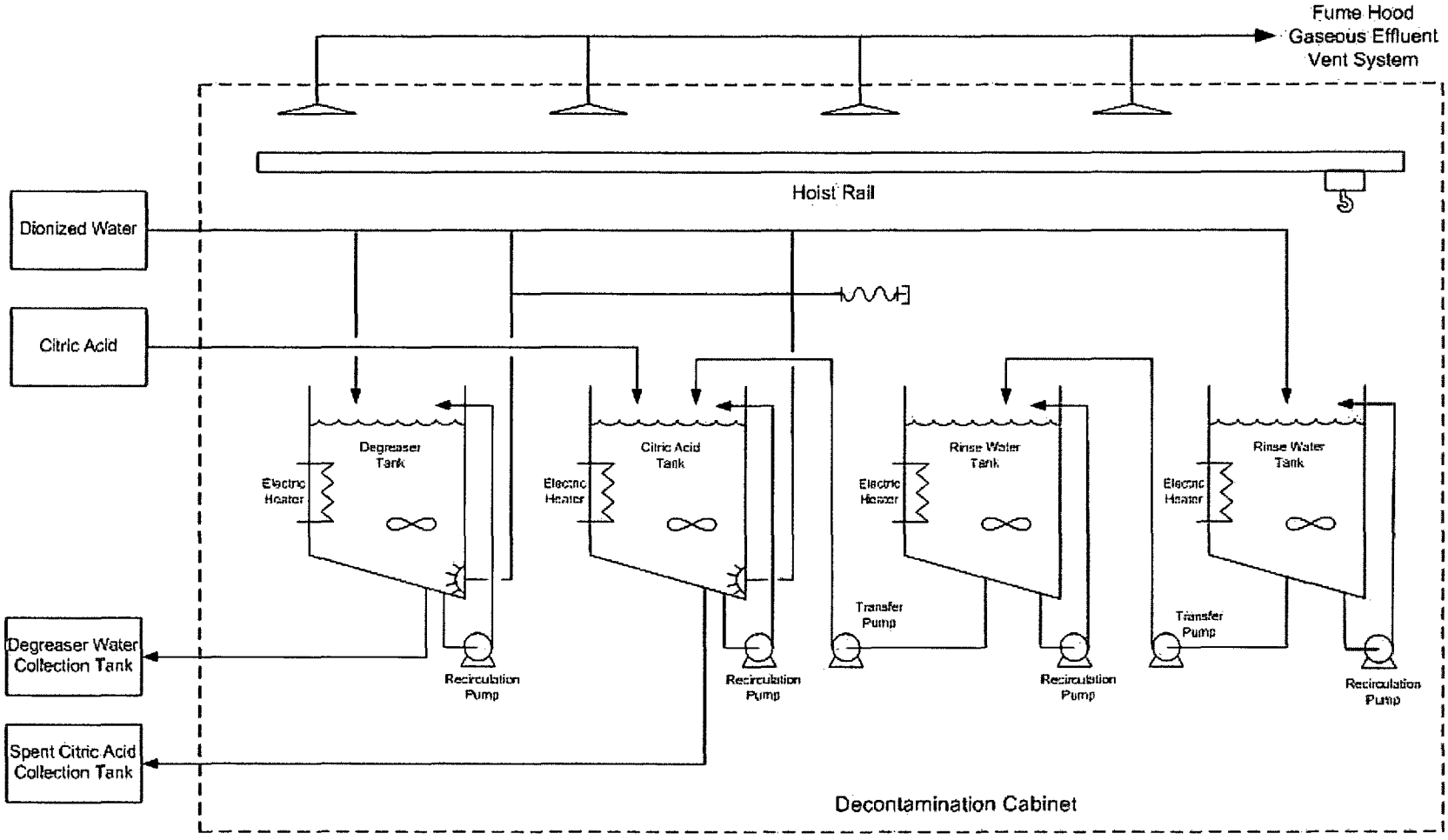

Figure 3.5-21 Process Flow Diagram Equipment Decontamination System

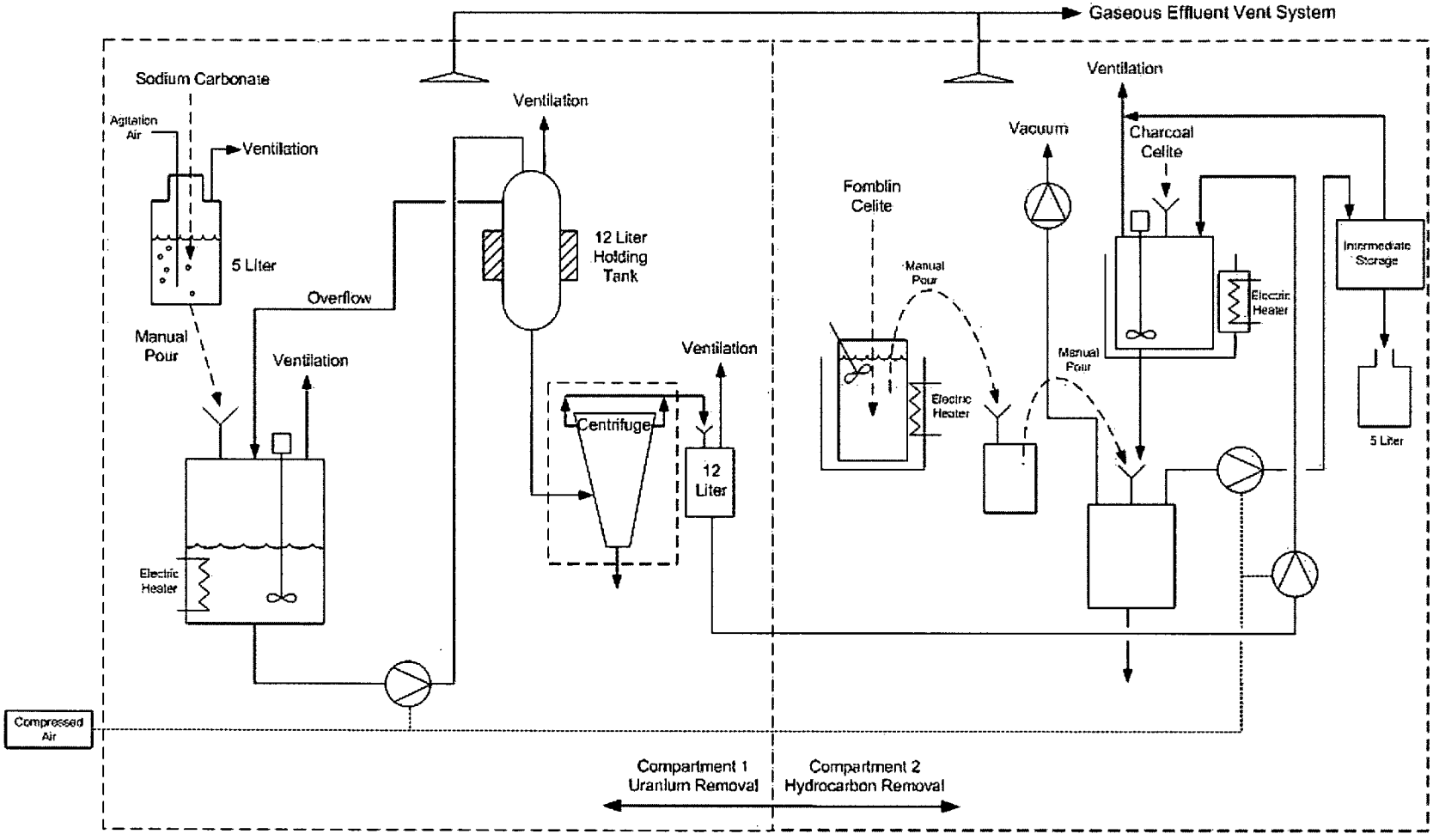

Figure 3.5-22 Process Flow Diagram Fomblin Oil Recovery System

3.6 PROCESS HAZARDS

The separation of uranium isotopes is a physical rather than chemical process. Natural uranium hexafluoride (UF_6) arrives at the National Enrichment Facility (NEF) in the solid phase in a 48-inch diameter cylinder. To begin the enrichment process, the 48-inch diameter feed cylinder is placed into a Solid Feed Station. The Solid Feed Station consists of an insulated enclosure, which is heated by electric heaters to approximately 53°C (127°F). At this temperature and pressure (sub-atmospheric), the solid UF_6 sublimes into a gas. The gaseous UF_6 is fed to the cascades for enriching to a maximum of 5 $^{w}/_{o}$ ^{235}U. An important safety feature of the feed system is that at no time does the UF_6 go into a liquid phase. Enriched and depleted UF_6 streams are withdrawn from the cascades by pumps and returned to the solid phase in Product and Tails Low Temperature Take-off Stations, respectively. These stations consist of insulated enclosures that are maintained at -25°C (-13°F) * by electrically operated chiller units. As the gaseous UF_6 enters the cylinder (either product or tails), desublimation into solid UF_6 occurs. No process chemical reactions are initiated.

Although the separation of isotopes is a physical rather than chemical process, chemical principles play an important role in the design of the facility. The phase behavior of UF_6 is critical to the design of all aspects of the facility. Chemical reactions include the undesirable reaction between UF_6 and water, which produces the toxic reaction products uranyl fluoride (UO_2F_2) and HF. Maintaining the UF_6 process piping at sub-atmospheric pressures minimizes this reaction in the event of a pipe leak. Other chemical reactions are controlled by utility systems that decontaminate equipment and remove contaminants from effluent streams and lubricating oil.

The process hazards associated with the NEF were identified in the Integrated Safety Analysis (ISA). These process hazards include radioactivity, toxicity of UF_6 and breakdown products, and criticality. The hazards from radioactivity were evaluated in the ISA and found to be low consequence. Some of the hazards associated with UF_6 release or criticality were found to be intermediate and high consequence. The potential accident sequences and consequences are discussed in greater detail in Section 3.7, General Types of Accident Sequences.

3.7 GENERAL TYPES OF ACCIDENT SEQUENCES

Table 3.7-1, Accident Sequence and Risk Index, lists the potential accident sequences that were identified that could have consequences that exceed the performance criteria of 10 CFR 70.61 (CFR, 2003). The accident sequences identified in Table 3.7-1 include those from the classified and non-classified Integrated Safety Analysis (ISA). The likelihood, consequence, and risk ratings are also provided. The measures to reduce the risk to acceptable levels (Items Relied on for Safety (IROFS)) by either reducing the frequency of occurrence of the events or mitigating the consequences of the events are also identified. The reduction in risk results from the availability of the IROFS during the portion of the accident sequence for which the IROFS are credited. Additional details/descriptions of the accident sequences presented in Table 3.7-1 are provided in Table 3.7-2, Accident Sequence Descriptions. Again, these descriptions include the classified ISA results.

The results presented in Tables 3.7-1 and 3.7-2 are for the hazards identified for the process systems. The fire (external to the process systems) and external events (e.g., severe weather, seismic, transportation and industrial) hazards were assessed on a facility-wide basis and the results summarized in Tables 3.7-3, External Events and Fire Accident Sequences and Risk Index and 3.7-4, External Events and Fire Accident Descriptions. These are discussed in additional detail later in the text. Table 3.7-5, Uranic Material Assumptions for Criticality Accident Sequences, provides the assumed mass and enrichment values for ^{235}U for each of the criticality accident sequences presented in Tables 3.7-1 through 3.7-4.

The accident sequence risk assessment demonstrates that credible high-consequence events are highly unlikely and credible intermediate-consequence events are unlikely. IROFS necessary to prevent or mitigate event sequences that exceed 10 CFR 70.61 (CFR, 2003) criteria have been identified.

The definitions for the contents of each column in the accident summary tabulation in Table 3.7 1 and Table 3.7 3 are provided below. The ISA methodology is described in Section 3.1, General ISA Information.

Accident Identifier

This column identifies the accident sequence being analyzed. The ISA will have all accident sequences for each uniquely identified facility process. The accident sequence identifier has the format AAB-C where AA is the system/area from the table below, B is the Hazard Analysis node number and C is the accident sequence number.

Accident Sequence System Identifier	
Identifier (AA)	**System/Area**
CL	Chemical Laboratory
CP	Cylinder Preparation
DS	Decontamination
EC	Cascade
FR	PFPE Oil Recovery
LT	Liquid Effluent Treatment
LW	Liquid Effluent Collection
MR	Mobile Rig
MS	Mass Spectrometry Laboratory
OC	Operate While Constructing
PB	Product Blending and Liquid Sampling
PT	Product Take-Off
RD	Cylinder Receipt and Dispatch
SW	Solid Waste Collection
TP	CentrifugeTest/Centrifuge Post Mortem
TT	Tails Take-Off
TVR	Ventilated Storage Room
UF	UF_6 Feed
VR	Ventilated Room

Initiating Event Index (Column a)

This column lists initiating events or IROFS failures that are typically identified in the Process Hazard Analysis (PHA) phase of the ISA and that may lead to consequences exceeding those identified in 10 CFR 70.61 (CFR, 2003). Initiating events are of several distinct types: (1) external events, such as hurricanes and earthquakes; (2) facility events external to the node being analyzed (e.g., fires, explosions, failures of other equipment, flooding from facility water sources); (3) deviations from normal operations of the process in the node (i.e., credible abnormal events); and (4) failures of IROFS of the node. The tabulated initiating events consist of those that involve an actual or assumed failure of IROFS or that cause a demand requiring IROFS to function to prevent consequences exceeding 10 CFR 70.61 (CFR, 2003) levels. The frequency index number for initiating events is given in the table in column (a)." Table 3.1-9, Failure Frequency Index Numbers, provides criteria for assigning a value to the frequency index.

Preventive Safety Parameter 1 or IROFS 1 Failure Index (Column b)

This column addresses the failure or success of the safety parameter designated to prevent consequences exceeding 10 CFR 70.61 (CFR, 2003) criteria. Specific IROFS that are needed to maintain the safety parameter are included in the table. The failure duration of the first IROFS is assigned using Table 3.1-11, Failure Duration Index Numbers. Accident sequences where two IROFS must simultaneously be in a failed state require assignment of the three index numbers (1) the failure frequency of the first IROFS, (2) the duration of this failure and (3) the failure frequency of the second IROFS. Reverse sequences are not identified in Table 3.7-1 since the failure frequencies and the duration of outages of the first and second IROFS of accident sequences with multiple IROFS are the same. Accident sequences may be more easily described as an occurrence of an initiating event followed by a failure of the IROFS on demand. In these cases, the failure probability index number is assigned using Table 3.1-10, Failure Probability Index Numbers and the failure duration is assigned using Table 3.1-11.

Preventive Safety Parameter 2 or IROFS 2 Failure Index (Column c)

This column is provided in case a second preventive Safety Parameter or IROFS is designated. The failure probability on demand is assigned in the same manner as for preventive IROFS 1.

Mitigation IROFS Failure Index (Column d)

This column is provided in case IROFS are available to mitigate the consequences of the accident sequence. That is, they reduce, but do not eliminate, the consequences of an accident sequence. An IROFS that eliminates all adverse consequences is considered preventive.

Likelihood Index T Uncontrolled (U)/Controlled (C) (Column e) and Likelihood Category (Column f)

Column (f) lists the likelihood category number for the risk matrix, which is based on the total likelihood index for an accident sequence. Column (e) is the total likelihood index, T, is the sum of the indices for those events that comprise an accident sequence, which normally consists of the initiating event and failure of one or more IROFS, including any failure duration indices. Based on the sum of these indices, the likelihood category number for the risk matrix is assigned using Table 3.1-8, Determination of Likelihood Category.

Consequence Category (Type of Accident) (Column g)

This column is provided to assign the consequence category numbers based on estimating the consequences of all types (i.e., radiological, criticality, chemical, and environmental) of accident sequences that may occur. Accident sequences having IROFS to mitigate consequences are divided into two cases, one where the mitigation succeeds, and one where it fails, each with different consequences. The type of accident is also listed in parenthesis where T indicates chemical and CR indicates criticality.

Risk Index (h = f x g) Uncontrolled(U)/Controlled (C) (Column h)

This column is provided to list the risk index, which is calculated as the product of the likelihood category and consequence category numbers. This is shown in the column heading by the formula "h = f x g." Sequences with values of "h" less than or equal to 4 are acceptable. (See Table 3.1-6, Risk Matrix with Risk Index Values).

Comments and Recommendations

This column records ISA team conclusions.

3.7.1 Process Risk Assessment

The results of the risk assessment performed for each accident sequence are summarized in Table 3.7-1, Accident Sequence and Risk Index. The following information is provided for each accident sequence, including the inclusion of any events which were screened as not credible:

- Consequences for each general type of uncontrolled accident sequence
- Comparison of the accident consequences to the performance requirements of 10 CFR 70.61 (CFR, 2003) and designation of each as a 'high consequence event' (10 CFR 70.61(b)) (i.e., Consequence Category 3), an 'intermediate consequence event' (10 CFR 70.61(c)) (i.e., Consequence Category 2) or neither (i.e. an event of no regulatory concern (low consequence event)) (i.e., Consequence Category 1)
- Likelihood of occurrence of each accident sequence, expressed in terms of the likelihood category (3=not unlikely, 2=unlikely, 1=highly unlikely)
- Classification of the risk of each uncontrolled accident sequence
- Classification of the likelihood of occurrence of each accident sequence (following application of IROFS)
- Classification of the risk of each controlled accident sequence

The detailed descriptions for the accident sequences are provided in Table 3.7-2, Accident Sequence Descriptions.

3.7.2 Fire and External Events Risk Assessment

As discussed previously, facility fires (FF) and external events (EE) were assessed on a facility-wide basis. The results of this assessment are presented in Tables 3.7-3, External Events and Fire Accident Sequences and Risk Index, and 3.7-4, External Events and Fire Accident Descriptions. The ISA methodology utilized for external events and facility fires is described in Section 3.1, General Integrated Safety Analysis (ISA) Information. The information contained in the columns in Table 3.7-3, External Events and Fire Accident Sequences and Risk Index is defined in Section 3.7.1, Process Risk Assessment.

3.7.3 Selected Consequence Analysis

To support the classification of ISA events and sequences by the National Enrichment Facility Emergency Plan, consequence analyses have been performed for the postulated events identified in the ISA Summary for which protective actions may be necessary. The only postulated events are nuclear criticality and loss of containment leading to a very large release of UF_6. These analyses have been performed for a Nuclear Criticality scenario and for a Blending Donor Station Heater Controller Failure and Heater Run Away scenario. For both of these scenarios, IROFS have been designated which result in acceptable risk results for these accidents. However, to support the classification of ISA events and sequences by the Emergency Plan, no credit for these IROFS is taken in the results presented in this section.

3.7.3.1 Nuclear Criticality

A conservative public consequence calculation for a criticality event has been completed. The consequence analysis methodology is based on NUREG/CR-6410 (NRC, 1998). The calculations were performed using the following assumptions:

- The criticality was assumed to occur in a vented vessel of unfavorable geometry containing a 400 L (105.6 gal) solution of uranium enriched in ^{235}U
- The criticality produces an initial burst of 1.0E+18 fissions, followed by 47 bursts of 1.92E+17 fissions per burst, for a total of 1.0E+19 fissions in 8 hours
- The event terminates when 100 L (26.4 gal) of the initial 400 L (105.6 gal) of solution is evaporated.

The consequence calculations included dose contributions from:

- Prompt gamma rays produced by the criticality event
- Fission products produced by the criticality event
- The uranium isotopes.

The off-site radiological impacts considered:

- Direct shine doses from prompt gamma radiation emitted during the criticality event
- Submersion, inhalation, and ground shine doses from radioactive material released to the atmosphere as a result of the criticality event.

For the prompt gamma radiation, the source was assumed to be shielded by a 20.3 cm (8 inch) thick concrete wall, and receptors were assumed to be at 340 m from the criticality site and at a number of other distances out to 1.61 km (one mile). Ensuing doses were calculated through use of a point-kernel shielding code, for a 2-hr exposure interval and for the duration of the criticality event (8 hrs).

For the atmospheric releases, 100 % of the noble gases produced by the criticality events and 25 % of the halogens (iodines) produced by the criticality events, and 0.05 % of the particulates and uranium isotopes in the evaporated solution (i.e., 0.0125 % of the totals) were assumed to be released from the vessel where the criticality takes place and released to the atmosphere without mixing or decay within the building. The atmospheric releases were assumed to be at uniform rates representative of the actual airborne releases from the criticality events during the 0 to 2 hr interval and the 2 to 8 hr interval. Credit for deposition within the building and ductwork was conservatively ignored.

Dispersion and ground-deposition of the released radioactivity was based on a computer code, which implements the methodology in Regulatory Guide 1.145 (NRC, 1982) and uses a finite-cloud-correction capability for cloud shine.

Dispersion/deposition calculations were performed for the 5th percentile meteorology to represent adverse dispersion conditions (i.e., better dispersion conditions prevail 95 % of the time), and 50th percentile meteorology to represent the realistic-case analyses.

The ensuing radiological consequences (submersion, inhalation and ground-shine pathways) were calculated at the critical receptor on the site boundary and at a number of distances out to 1.61 km (one mile), using a computer code for radiological impact evaluations. The exposure intervals were assumed to be 2 hrs and 8 hrs, the latter representing the end of the criticality event.

The 2-hr and 8-hr Total Effective Dose Equivalent (TEDE) doses at the site boundary were determined to be 3.1 mSv (310 mRem) and 8.0 mSv (800 mRem), respectively; these doses include the prompt gamma radiation and the released cloud contributions under accident meteorology (5th percentile). The corresponding doses as a function of distance from the criticality site are presented in Figure 3.7-1, TEDE Doses from Postulated Criticality, for both accident (5 %) and average meteorology. These results indicate that the consequences of a postulated criticality event upon members of the public at or beyond the site boundary would be considerably below the threshold for an intermediate consequence event, as defined by 10 CFR 70.61 (CFR, 2003).

This calculation conservatively bounds the various locations in the facility where a criticality event is possible.

3.7.3.2 Blending Donor Station Heater Controller Failure and Heater Run Away (No IROFS Credited)

The initiating event for this scenario is the failure of the Blending Donor Station heater controller causing the blending donor heater within the station to remain on.

For the uncontrolled accident sequence, the product cylinder over heats and the cylinder hydraulically ruptures due to the expansion of the liquid UF_6. Upon cylinder rupture, the product cylinder content of UF_6 is released within the Blending Donor Station. Since the station enclosure is not air tight, the UF_6 is released to the Blending and Liquid Sampling Area. The UF_6, when in contact with air, will produce HF gas and UO_2F_2. The release into the building is then released to the outside. The HVAC is conservatively assumed to be operating at the maximum ventilation flow rate. HF and UO_2F_2 are further transported to outside the site boundary.

Atmospheric dispersion factors were generated for various distances downwind using the algorithms presented in Regulatory Guide 1.145 (NRC, 1982). Two sets of meteorological conditions were evaluated: F stability class with a wind speed of 0.6 m/sec (2.0 ft/s) (representing conservative case consequences) and D stability class with a wind speed of 2.0 m/sec (6.6 ft/s) (representing typical or average case consequences). These conditions are consistent with those used in the consequence analysis for criticality. The results for this scenario are presented in Figures 3.7-2 though 3.7-5. The detailed discussion of the consequence analysis methodology is provided in the ISA documentation.

3.7.4 References

Edition of Codes, Standards, NRC Documents, etc that are not listed below are given in Table 3.0-1.

CFR, 2003. Title 10,Code of Federal Regulations, Section 70.61, Performance Requirements, 2003.

NRC, 1982. Atmospheric Dispersion Models for Potential Accident Consequence Assessments at Nuclear Power Plants, Regulatory Guide 1.145, Revision 1, U.S. Nuclear Regulatory Commission, 1982.

NRC, 1998. Nuclear Fuel Cycle Accident Analysis Handbook, NUREG/CR-6410, U.S. Nuclear Regulatory Commission, March 1998.

NRC, 209. Safety Evaluation Report of Louisiana Energy Services Amendment Request for the National Enrichment Facility to Provide an Alternate Sole Item Relied On For Safety for Minimizing UF_6 Releases After a Design Basis Earthquake (LES Correspondence Number IN-09-00027-NRC), U.S. Nuclear Regulatory Commission, February 2009.

3.7.5 Section 3.7 Tables

Table 3.7-1 Accident Sequence and Risk Index

Accident Identifier	Initiating Event Index	Preventive Safety Parameter 1 or IROFS 1 Failure Index	Preventive Safety Parameter 2 or IROFS 2 Failure Index	Mitigation IROFS Failure Index	Likelihood Index T Uncontrolled (U) / Controlled (C)	Likelihood Category	Conseq. Category (Type of Accident)	Risk Index (h=f x g) Uncontrolled (U) / Controlled (C)	Comments and Recommendations
	(a)	(b)	(c)	(d)	(e)	(f)	(g)	(h)	
TT2-1	-2	N/A	N/A	N/A	-2 (U)	3	3 (T)	9 (U)	IROFS Required
TT2-1	-2	(IROFS1) -2	(IROFS2) -2	N/A	-6 (C)	1	3 (T)	3 (C)	Acceptable Risk
TT2-2	-2	N/A	N/A	N/A	-2 (U)	3	3 (T)	9 (U)	IROFS Required
TT2-2	-2	(IROFS38) -3	N/A	N/A	-5 (C)	1	3 (T)	3 (C)	Acceptable Risk
TT3-1	-2	N/A	N/A	N/A	-2 (U)	3	3 (T)	9 (U)	IROFS Required
TT3-1	-2		N/A	(IROFSC21) (Failure, -3)	-5 (C)	1	3 (T)	3 (C)	Acceptable Risk
TT3-1	-2		N/A	(IROFSC21) (Success)	-2 (C)	3	1 (T)	3 (C)	Acceptable Risk
UF1-1	-2	N/A	N/A	N/A	-2 (U)	3	3 (T)	9 (U)	IROFS Required
UF1-1	-2	(IROFS4) -2	(IROFS5) -2	N/A	-6 (C)	1	3 (T)	3 (C)	Acceptable Risk
UF2-1	-2	N/A	N/A	N/A	-2 (U)	3	3 (T)	9 (U)	IROFS Required
UF2-1	-2	(IROFS1) -2	(IROFS2) -2	N/A	-6 (C)	1	3 (T)	3 (C)	Acceptable Risk
UF2-2	-2	N/A	N/A	N/A	-2 (U)	3	3 (T)	9 (U)	IROFS Required
UF2-2	-2	(IROFS38) -3	N/A	N/A	-5 (C)	1	3 (T)	3 (C)	Acceptable Risk
UF2-3	-2	N/A	N/A	N/A	-2 (U)	3	3 (T)	9 (U)	IROFS Required
UF2-3	-2	N/A	N/A	(IROFSC21) (Failure, -3)	-5 (C)	1	3 (T)	3 (C)	Acceptable Risk
UF2-3	-2	N/A	N/A	(IROFSC21) (Success)	-2 (C)	3	1 (T)	3 (C)	Acceptable Risk
MR3-1	-2	N/A	N/A	N/A	-2 (U)	3	3 (T)	9 (U)	IROFS Required

Table 3.7-1 Accident Sequence and Risk Index

Accident Identifier	Initiating Event Index	Preventive Safety Parameter 1 or IROFS 1 Failure Index	Preventive Safety Parameter 2 or IROFS 2 Failure Index	Mitigation IROFS Failure Index	Likelihood Index T Uncontrolled (U) / Controlled (C)	Likelihood Category	Conseq. Category (Type of Accident)	Risk Index (h=f x g) Uncontrolled (U) / Controlled (C)	Comments and Recommendations
	(a)	(b)	(c)	(d)	(e)	(f)	(g)	(h)	
MR3-1	-2	N/A	N/A	(IROFSC21) (failure, -3)	-5 (C)	1	3 (T)	3 (C)	Acceptable Risk
MR3-1	-2	N/A	N/A	(IROFSC21) (Success)	-2 (C)	3	1 (T)	3 (C)	Acceptable Risk
MR3-2	-2	N/A	N/A	N/A	-2 (U)	3	3 (T)	9 (U)	IROFS Required
MR3-2	-2	N/A	N/A	(IROFSC21) (Failure, -3)	-5 (C)	1	3 (T)	3 (C)	Acceptable Risk
MR3-2	-2	N/A	N/A	(IROFSC21) (Success)	-2 (C)	3	1 (T)	3 (C)	Acceptable Risk
PT2-1	-2	N/A	N/A	N/A	-2 (U)	3	3 (T)	9 (U)	IROFS Required
PT2-1	-2	(IROFS1) -2	(IROFS2) -2	N/A	-6 (C)	1	3 (T)	3 (C)	Acceptable Risk
PT2-4	-2	N/A	N/A	N/A	-2 (U)	3	3 (T)	9 (U)	IROFS Required
PT2-4	-2	(IROFS38) -3	N/A	N/A	-5 (C)	1	3 (T)	3 (C)	Acceptable Risk
PT2-5	(IROFS30a) -1	N/A	N/A	N/A	-1 (U)	3	3 (CR)	9 (U)	IROFS Required
PT2-5	(IROFS30a) -1	(IROFS30b) -2	(IROFS30c) -2	N/A	-5 (C)	1	3 (CR)	3 (C)	Acceptable Risk
PT3-5	-2	N/A	N/A	N/A	-2 (U)	3	3 (CR)	9 (U)	IROFS Required
PT3-5	-2	(IROFS15) -3	N/A	N/A	-5 (C)	1	3 (CR)	3 (C)	Acceptable Risk
PT5-1	-2	N/A	N/A	N/A	-2(U)	3	3 (T)	9(U)	IROFS Required
PT5-1	-2	N/A	N/A	(IROFSC21) Success	-2(C)	3	1 (T)	3 (C)	Acceptable Risk
PT5-1	-2	N/A	N/A	(IROFSC21) (Failure -3)	-5(C)	1	3 (T)	3 (C)	Acceptable Risk)

Table 3.7-1 Accident Sequence and Risk Index

Accident Identifier	Initiating Event Index	Preventive Safety Parameter 1 or IROFS 1 Failure Index	Preventive Safety Parameter 2 or IROFS 2 Failure Index	Mitigation IROFS Failure Index	Likelihood Index T Uncontrolled (U) / Controlled (C)	Likelihood Category	Conseq. Category (Type of Accident)	Risk Index (h=f x g) Uncontrolled (U) / Controlled (C)	Comments and Recommendations
	(a)	(b)	(c)	(d)	(e)	(f)	(g)	(h)	
PB1-1	-2	N/A	N/A	N/A	-2 (U)	3	3 (T)	9 (U)	IROFS Required
PB1-1	-2	(IROFS4) -2	(IROFS5) -2	N/A	-6 (C)	1	3 (T)	3 (C)	Acceptable Risk
PB1-3	-2	N/A	N/A	N/A	-2 (U)	3	3 (CR)	9 (U)	IROFS Required
PB1-3	-2	(IROFS45) -3	N/A	N/A	-5 (C)	1	3 (CR)	3 (C)	Acceptable Risk
PB2-1	-2	N/A	N/A	N/A	-2 (U)	3	3 (T)	9 (U)	IROFS Required
PB2-1	-2	(IROFS1) -2	(IROFS2) -2	N/A	-6 (C)	1	3 (T)	3 (C)	Acceptable Risk
PB2-2	-2	N/A	N/A	N/A	-2 (U)	3	3 (CR)	9 (U)	IROFS Required
PB2-2	-2	(IROFS16a) -3	N/A	N/A	-5 (C)	1	3 (CR)	3 (C)	Acceptable Risk
PB2-4	-2	N/A	N/A	N/A	-2 (U)	3	3 (T)	9 (U)	IROFS Required
PB2-4	-2	(IROFS38) -3	N/A	N/A	-5 (C)	1	3 (T)	3 (C)	Acceptable Risk
PB2-6	(IROFS30a) -1	N/A	N/A	N/A	-1 (U)	3	3 (CR)	9 (U)	IROFS Required
PB2-6	(IROFS30a) -1	(IROFS30b) -2	(IROFS30c) -2	N/A	-5 (C)	1	3 (CR)	3 (C)	Acceptable Risk
PB3-3	-2	N/A	N/A	N/A	-2 (U)	3	3 (T)	9 (U)	IROFS Required
PB3-3	-2	(IROFS3) (Failure, -2)	N/A	(IROFS47a) (Failure, -3)	-7 (C)	1	3 (T)	3 (C)	Acceptable Risk
PB3-3	-2	(IROFS3) (Failure, -2)	N/A	(IROFS47a) (Success)	-4 (C)	2	2 (T)	4 (C)	Acceptable Risk
PB3-3	-2	(IROFS3) (Success)	N/A	(IROFS47a) (Failure, -3)	-5 (C)	1	3 (T)	3 (C)	Acceptable Risk
PB4-1	-2	N/A	N/A	N/A	-2 (U)	3	3 (T)	9 (U)	IROFS Required

Table 3.7-1 Accident Sequence and Risk Index

Accident Identifier	Initiating Event Index	Preventive Safety Parameter 1 or IROFS 1 Failure Index	Preventive Safety Parameter 2 or IROFS 2 Failure Index	Mitigation IROFS Failure Index	Likelihood Index T Uncontrolled (U) / Controlled (C)	Likelihood Category	Conseq. Category (Type of Accident)	Risk Index (h=f x g) Uncontrolled (U) / Controlled (C)	Comments and Recommendations
	(a)	(b)	(c)	(d)	(e)	(f)	(g)	(h)	
PB4-1	-2	(IROFS10) -3	N/A	N/A	-5 (C)	1	3 (T)	3 (C)	Acceptable Risk
PB4-2	-2	N/A	N/A	N/A	-2 (U)	3	3 (T)	9 (U)	IROFS Required
PB4-2	-2	(IROFS11) -2	(IROFS12) -2	N/A	-6 (C)	1	3 (T)	3 (C)	Acceptable Risk
PB4-3	-2	N/A	N/A	N/A	-2 (U)	3	3 (T)	9 (U)	IROFS Required
PB4-3	-2	(IROFS10) -3	N/A	N/A	-5 (C)	1	3 (T)	3 (C)	Acceptable Risk
PB4-4	-2	N/A	N/A	N/A	-2 (U)	3	3 (T)	9 (U)	IROFS Required
PB4-4	-2	(IROFS42) -2	(IROFS10) -3	N/A	-7 (C)	1	3 (T)	3 (C)	Acceptable Risk
VR1-1	-2	N/A	N/A	N/A	-2 (U)	3	3 (CR)	9 (U)	IROFS Required
VR1-1	-2	(IROFS3) -2	(IROFS21) -2	N/A	-6 (C)	1	3 (CR)	3 (C)	Acceptable Risk
VR1-2	-2	N/A	N/A	N/A	-2 (U)	3	3 (CR)	9 (U)	IROFS Required
VR1-2	-2	(IROFS22) -2	(IROFS21) -2	N/A	-6 (C)	1	3 (CR)	3 (C)	Acceptable Risk
VR1-3	-2	N/A	N/A	N/A	-2 (U)	3	3 (T)	9 (U)	IROFS Required
VR1-3	-2	(IROFS23a) -3	N/A	N/A	-5 (C)	1	3 (T)	3 (C)	Acceptable Risk
VR1-5	-2	N/A	N/A	N/A	-2 (U)	3	3 (T)	9 (U)	IROFS Required
VR1-5	-2	(IROFS3) (Failure, -2)	N/A	(IROFS47b) (Failure, -3)	-7 (C)	1	3 (T)	3 (C)	Acceptable Risk
VR1-5	-2	(IROFS3) (Failure, -2)	N/A	(IROFS47b) (Success)	-4 (C)	2	2 (T)	4 (C)	Acceptable Risk
VR1-5	-2	(IROFS3) (Success)	N/A	(IROFS47b) (Failure, -3)	-5 (C)	1	3 (T)	3 (C)	Acceptable Risk
VR2-1	-2	N/A	N/A	N/A	-2 (U)	3	2 (T)	6 (U)	IROFS Required

Table 3.7-1 Accident Sequence and Risk Index

Accident Identifier	Initiating Event Index	Preventive Safety Parameter 1 or IROFS 1 Failure Index	Preventive Safety Parameter 2 or IROFS 2 Failure Index	Mitigation IROFS Failure Index	Likelihood Index T Uncontrolled (U) / Controlled (C)	Likelihood Category	Conseq. Category (Type of Accident)	Risk Index (h=f x g) Uncontrolled (U) / Controlled (C)	Comments and Recommendations
	(a)	(b)	(c)	(d)	(e)	(f)	(g)	(h)	
VR2-1	-2	(IROFS23b) -2	N/A	N/A	-4 (C)	2	2 (T)	4 (C)	Acceptable Risk
VR2-2	-2	N/A	N/A	N/A	-2 (U)	3	3 (T)	9 (U)	IROFS Required
VR2-2	-2	(IROFS23b) -2	(IROFS24a) -2	N/A	-6 (C)	1	3 (T)	3 (C)	Acceptable Risk
VR2-7	(IROFS31a) -1	N/A	N/A	N/A	-1 (U)	3	3 (CR)	9 (U)	IROFS Required
VR2-7	(IROFS31a) -1	(IROFS31b) -2	(IROFS31c) -2	N/A	-5 (C)	1	3 (CR)	3 (C)	Acceptable Risk
FR1-1	-2	N/A	N/A	N/A	-2 (U)	3	3 (CR)	9 (U)	IROFS Required
FR1-1	-2	(IROFS14a) -3	N/A	N/A	-5 (C)	1	3 (CR)	3 (C)	Acceptable Risk
FR1-2	-2	N/A	N/A	N/A	-2 (U)	3	3 (CR)	9 (U)	IROFS Required
FR1-2	-2	(IROFS14b) -3	N/A	N/A	-5 (C)	1	3 (CR)	3 (C)	Acceptable Risk
FR2-1	-2	N/A	N/A	N/A	-2 (U)	3	3 (CR)	9 (U)	IROFS Required
FR2-1	-2	(IROFS14a) -3	N/A	N/A	-5 (C)	1	3 (CR)	3 (C)	Acceptable Risk
FR2-2	-2	N/A	N/A	N/A	-2 (U)	3	3 (CR)	9 (C)	IROFS Required
FR2-2	-2	(IROFS14b) -3	N/A	N/A	-5 (C)	1	3 (CR)	3 (C)	Acceptable Risk
DS1-1	-2	N/A	N/A	N/A	-2 (U)	3	3 (CR)	9 (U)	IROFS Required
DS1-1	-2	(IROFS14a) -3	N/A	N/A	-5 (C)	1	3 (CR)	3 (C)	Acceptable Risk
DS1-2	-2	N/A	N/A	N/A	-2 (U)	3	3 (CR)	9 (U)	IROFS Required
DS1-2	-2	(IROFS14b) -3	N/A	N/A	-5 (C)	1	3 (CR)	3 (C)	Acceptable Risk

Table 3.7-1 Accident Sequence and Risk Index

Accident Identifier	Initiating Event Index	Preventive Safety Parameter 1 or IROFS 1 Failure Index	Preventive Safety Parameter 2 or IROFS 2 Failure Index	Mitigation IROFS Failure Index	Likelihood Index T Uncontrolled (U) / Controlled (C)	Likelihood Category	Conseq. Category (Type of Accident)	Risk Index (h=f x g) Uncontrolled (U) / Controlled (C)	Comments and Recommendations
	(a)	(b)	(c)	(d)	(e)	(f)	(g)	(h)	
DS1-3	(IROFS19c) -1	N/A	N/A	N/A	-1 (U)	3	3 (CR)	9 (U)	IROFS Required
DS1-3	(IROFS19c) -1	(IROFS19a) -2	(IROFS19d) -2	N/A	-5 (C)	1	3 (CR)	3 (C)	Acceptable Risk
DS2-1	-2	N/A	N/A	N/A	-2 (U)	3	3 (CR)	9 (U)	IROFS Required
DS2-1	-2	(IROFS14a) -3	N/A	N/A	-5 (C)	1	3 (CR)	3 (C)	Acceptable Risk
DS2-2	-2	N/A	N/A	N/A	-2 (U)	3	3 (CR)	9 (U)	IROFS Required
DS2-2	-2	(IROFS14b) -3	N/A	N/A	-5 (C)	1	3 (CR)	3 (C)	Acceptable Risk
DS2-3	(IROFS19c) -1	N/A	N/A	N/A	-1 (U)	3	3 (CR)	9 (U)	IROFS Required
DS2-3	(IROFS19c) -1	(IROFS19a) -2	(IROFS19d) -2	N/A	-5 (C)	1	3 (CR)	3 (C)	Acceptable Risk
DS3-1	-2	N/A	N/A	N/A	-2 (U)	3	3 (CR)	9 (U)	IROFS Required
DS3-1	-2	(IROFS14a) -3	N/A	N/A	-5 (C)	1	3 (CR)	3 (C)	Acceptable Risk
DS3-2	-2	N/A	N/A	N/A	-2 (U)	3	3 (CR)	9 (U)	IROFS Required
DS3-2	-2	(IROFS14b) -3	N/A	N/A	-5 (C)	1	3 (CR)	3 (C)	Acceptable Risk
CL3-1	-2	N/A	N/A	N/A	-2 (U)	3	3 (CR)	9 (U)	IROFS Required
CL3-1	-2	(IROFS20) -2	(IROFS21) -2	N/A	-6 (C)	1	3 (CR)	3 (C)	Acceptable Risk
CL3-2	-2	N/A	N/A	N/A	-2 (U)	3	3 (T)	9 (U)	IROFS Required
CL3-2	-2	(IROFS24b) -2	(IROFS46) -2	N/A	-6 (C)	1	3 (T)	3 (C)	Acceptable Risk
CL3-3	-2	N/A	N/A	N/A	-2 (U)	3	3 (T)	9 (U)	IROFS Required

Table 3.7-1 Accident Sequence and Risk Index

Accident Identifier	Initiating Event Index	Preventive Safety Parameter 1 or IROFS 1 Failure Index	Preventive Safety Parameter 2 or IROFS 2 Failure Index	Mitigation IROFS Failure Index	Likelihood Index T Uncontrolled (U) / Controlled (C)	Likelihood Category	Conseq. Category (Type of Accident)	Risk Index (h=f x g) Uncontrolled (U) / Controlled (C)	Comments and Recommendations
	(a)	(b)	(c)	(d)	(e)	(f)	(g)	(h)	
CL3-3	-2	(IROFS43) -2	(IROFS24b) -2	N/A	-6 (C)	1	3 (T)	3 (C)	Acceptable Risk
CP1-2	-2	N/A	N/A	N/A	-2 (U)	3	3 (CR)	9 (U)	IROFS Required
CP1-2	-2	(IROFS16a) -3	N/A	N/A	-5 (C)	1	3 (CR)	3 (C)	Acceptable Risk
SW1-1	-2	N/A	N/A	N/A	-2 (U)	3	3 (CR)	9 (U)	IROFS Required
SW1-1	-2	(IROFS14a) -3	N/A	N/A	-5 (C)	1	3 (CR)	3 (C)	Acceptable Risk
SW1-2	-2	N/A	N/A	N/A	-2 (U)	3	3 (CR)	9 (U)	IROFS Required
SW1-2	-2	(IROFS14b) -3	N/A	N/A	-5 (C)	1	3 (CR)	3 (C)	Acceptable Risk
LW1-1	(IROFS19c) -1	N/A	N/A	N/A	-1 (U)	3	3 (CR)	9 (U)	IROFS Required
LW1-1	(IROFS19c) -1	(IROFS19a) –2	(IROFS19d) -2	N/A	-5 (C)	1	3 (CR)	3 (C)	Acceptable Risk
LW1-2	-2	N/A	N/A	N/A	-2 (U)	3	3 (CR)	9 (U)	IROFS Required
LW1-2	-2	(IROFS14a) -3	N/A	N/A	-5 (C)	1	3 (CR)	3 (C)	Acceptable Risk
LW1-3	-2	N/A	N/A	N/A	-2 (U)	3	3 (CR)	9 (U)	IROFS Required
LW1-3	-2	(IROFS14b) -3	N/A	N/A	-5 (C)	1	3 (CR)	3 (C)	Acceptable Risk
LW2-1	(IROFS19c) -1	N/A	N/A	N/A	-1 (U)	3	3 (CR)	9 (U)	IROFS Required
LW2-1	(IROFS19c) -1	(IROFS19a) -2	(IROFS19d) -2	N/A	-5 (C)	1	3 (CR)	3 (C)	Acceptable Risk
LW3-1	(IROFS19c) -1	N/A	N/A	N/A	-1 (U)	3	3 (CR)	9 (U)	IROFS Required

Table 3.7-1 Accident Sequence and Risk Index

Accident Identifier	Initiating Event Index	Preventive Safety Parameter 1 or IROFS 1 Failure Index	Preventive Safety Parameter 2 or IROFS 2 Failure Index	Mitigation IROFS Failure Index	Likelihood Index T Uncontrolled (U) / Controlled (C)	Likelihood Category	Conseq. Category (Type of Accident)	Risk Index (h=f x g) Uncontrolled (U) / Controlled (C)	Comments and Recommendations
	(a)	(b)	(c)	(d)	(e)	(f)	(g)	(h)	
LW3-1	(IROFS19c) -1	(IROFS19a) -2	(IROFS19d) -2	N/A	-5 (C)	1	3 (CR)	3 (C)	Acceptable Risk
LW5-1	(IROFS19c) -1	N/A	N/A	N/A	-1 (U)	3	3 (CR)	9 (U)	IROFS Required
LW5-1	(IROFS19c) -1	(IROFS19a) -2	(IROFS19d) -2	N/A	-5 (C)	1	3 (CR)	3 (C)	Acceptable Risk
RD1-1	-2	N/A	N/A	N/A	-2 (U)	3	3 (CR)	9 (U)	IROFS Required
RD1-1	-2	(IROFS45) -3	N/A	N/A	-5 (C)	1	3 (CR)	3 (C)	Acceptable Risk
EC3-1	-2	N/A	N/A	N/A	-2 (U)	3	3 (CR)	9 (U)	IROFS Required
EC3-1	-2	(IROFSC22) -3	N/A	N/A	-5 (C)	1	3 (CR)	3 (C)	Acceptable Risk
EC4-1	-2	N/A	N/A	N/A	-2 (U)	3	3 (T)	9(U)	IROFS Required
EC 4-1	-2	N/A	N/A	(IROFSC21) (Failure, -3)	-5 (C)	1	3 (T)	3 (C)	Acceptable Risk
EC4-1	-2	N/A	N/A	(IROFSC21) (Success)	-2 (C)	3	1 (T)	3 (C)	Acceptable Risk
TP8-1	-2	N/A	N/A	N/A	-2 (U)	3	3 (T)	9 (U)	IROFS Required
TP8-1	-2	(IROFSC15) -2	(IROFSC16) -2	N/A	-6 (C)	1	3 (T)	3 (C)	Acceptable Risk
TP8-2	-2	N/A	N/A	N/A	-2 (U)	3	1(T)	3(U)	Acceptable Risk
CHEM RELEASE-WORKER EVAC	-2	N/A	N/A	N/A	-2 (U)	3	3 (T)	9 (U)	IROFS Required
CHEM RELEASE-WORKER EVAC	-2	N/A	N/A	IROFS39c -3	-5 (C)	1	3 (T)	3 (C)	Acceptable Risk

Table 3.7-1 Accident Sequence and Risk Index

Accident Identifier	Initiating Event Index	Preventive Safety Parameter 1 or IROFS 1 Failure Index	Preventive Safety Parameter 2 or IROFS 2 Failure Index	Mitigation IROFS Failure Index	Likelihood Index T Uncontrolled (U) / Controlled (C)	Likelihood Category	Conseq. Category (Type of Accident)	Risk Index (h=f x g) Uncontrolled (U) / Controlled (C)	Comments and Recommendations
	(a)	(b)	(c)	(d)	(e)	(f)	(g)	(h)	
CHEM RELEASE – WORKER EVAC – CAB	-2	N/A	N/A	N/A	-2 (U)	3	2 (T)	6 (U)	IROFS Required
CHEM RELEASE – WORKER EVAC – CAB	-2	N/A	N/A	IROFS39c -2	-4 (C)	2	2 (T)	4 (C)	Acceptable Risk
LOSS OF SAFE-BY-DESIGN ATTRIBUTE	-5	N/A	N/A	N/A	-5 (U)	1	3(CR)	3(U)	Acceptable Risk

Table 3.7-2 Accident Sequence Descriptions

Accident Identifier: TT2-1

The initial failure (initiating event) is the tails low temperature take-off station cold box defrost heater controller failure, causing the cold box heater within the tails low temperature take-off station to remain on.

For the uncontrolled accident sequence, the tails cylinder over heats and the cylinder hydraulically ruptures due to the expansion of the UF_6. Upon tails cylinder rupture, the tails cylinder content of UF_6 is released within the tails low temperature take-off station. Since the station enclosure is not air tight, the UF_6 is released to the UF_6 Handling Area. This sequence, if uncontrolled, would require a significant time to cause a UF_6 release since the heat up rate is limited by heater capacity. This event is assumed to have a high consequence to the worker and public.

For the controlled accident sequence, the preventive measures are (1) an automatic trip of defrost heater and fan on high air return temperature to ensure cylinder integrity (IROFS1) and (2) an automatic trip of defrost heater and fan on high station internal air temperature to ensure cylinder integrity (IROFS2).

The frequency index number for the initiating event was determined to be (-2). The NUREG-1520 criteria - no failures of this type in this facility in 30 yrs - applies. This failure frequency index was selected based on evidence from history of similarly designed Urenco European plants, which have a combined plant history of greater than 30 yrs, and have not had a failure of this type.

A failure probability index of (-2) was selected for IROFS1. This corresponds to single active engineered IROFS per NUREG-1520.

A failure probability index of (-2) was selected for IROFS2. This corresponds to a single active engineered IROFS per NUREG-1520.

Accident Identifier: TT2-2

The initial failure (initiating event) is the failure of the tails low temperature take-off station load cell causing the tails cylinder to be over filled.

The over filled tails cylinder is then warmed to ambient and ruptures in the tails low temperature take-off station.

Upon tails cylinder rupture UF_6 is released to the tails low temperature take-off station. Since the station enclosure is not air tight, UF_6 is released to the UF_6 Handling Area. This event is assumed to have a high consequence to the worker and public.

For the controlled accident sequence, the preventive measure is administratively limit the cylinder fill mass to ensure cylinder integrity by verifying cylinder weight is within specified trending limits once per shift during filling of the cylinder (IROFS38). If the acceptance criterion is not met, then fill of the associated cylinder shall be terminated.

The frequency index number for the initiating event was determined to be (-2). The NUREG-1520 criteria – no failures of this type in this facility in 30 years – applies. This failure frequency index was selected based on evidence from history of similarly designed Urenco European plants, which have a combined plant history of greater than 30 years, and have not had a failure of this type.

The failure probability index of (-3) was selected for IROFS38. This corresponds to an enhanced administrative IROFS per NUREG-1520. IROFS38 is enhanced by requiring independent verification of the IROFS safety function. The IROFS justification for enhanced administrative control is discussed in Section 3.8.3.

Table 3.7-2 Accident Sequence Descriptions

Accident Identifier: TT3-1

The initial failure (initiating event) is the tails mixed bed trap becomes saturated with UF_6 caused by human error in an incorrect valve lineup.

For the uncontrolled accident sequence, a UF_6 plug forms on the discharge of the tails vacuum pump, causing high pressure and thus failing the tails vacuum pump discharge flange seal, causing a release of UF_6 to the UF_6 Handling Area. This event was calculated to result in a high consequence to the worker.

For the controlled accident sequence, the mitigative measure is a flow restriction (orifice) on the suction of the vacuum pump to ensure, in the event of a postulated release, worker consequences of inhalation of uranic material and HF are low (IROFSC21). As a result of IROFSC21, the consequence analysis shows that the consequences have been mitigated to a low category (1).

The frequency index number for the initiating event was determined to be (-2). The NUREG-1520 criteria – no failures of this type in this facility in 30 years – applies. This failure frequency index was selected based on evidence from history of similarly designed Urenco European plants, which have a combined plant history of greater than 30 years, and have not had a failure of this type.

The failure probability index of (-3) was selected for IROFC21. This corresponds to a single passive engineered IROFS per NUREG-1520.

Accident Identifier: UF1-1

The initial failure (initiating event) is the solid feed station heater controller failure, causing the solid feed station heater within the solid feed station to remain on.

For the uncontrolled accident sequence, the feed cylinder over heats and the cylinder hydraulically ruptures due to the expansion of the UF_6. Upon cylinder rupture, the feed cylinder content of UF_6 is released within the solid feed station. Since the station enclosure is not air tight, the UF_6 is released to the UF_6 Handling Area. This sequence, if uncontrolled, would require a significant time to cause a UF_6 release since the heat up rate is limited by the heater capacity. This event is assumed to have a high consequence to the worker and public.

For the controlled accident sequence, the preventive measures are (1) an automatic trip of station heaters on high station internal air temperature to ensure cylinder integrity (IROFS4) and (2) an automatic trip of station heaters on high station internal air temperature to ensure cylinder integrity (IROFS5).

The frequency index number for the initiating event was determined to be (-2). The NUREG-1520 criteria – no failures of this type in this facility in 30 yrs – applies. This failure frequency index was selected based on evidence from history of similarly designed Urenco European plants, which have a combined plant history of greater than 30 yrs, and have not had a failure of this type.

The failure probability index of (-2) was selected for IROFS4. This corresponds to a single active engineered IROFS per NUREG-1520.

The failure probability index of (-2) was selected for IROFS5. This corresponds to a single active engineered IROFS per NUREG-1520.

Table 3.7-2 Accident Sequence Descriptions

Accident Identifier: UF2-1

The initial failure (initiating event) is the feed purification low temperature take-off station defrost heater controller failure, causing the defrost heater within the feed purification low temperature take-off station to remain on.

For the uncontrolled accident sequence, the feed purification cylinder over heats and the cylinder hydraulically ruptures due to the expansion of the UF_6. Upon cylinder rupture, the feed purification cylinder content of UF_6 is released within the feed purification station. Since the station enclosure is not air tight, the UF_6 is released to the UF_6 Handling Area exposing workers and the public. This sequence, if uncontrolled, would require a significant time to cause a UF_6 release since the heat up rate is limited by heater capacity. This event is assumed to have a high consequence to the worker and to the public.

For the controlled accident sequence, the preventive measures are: (1) an automatic trip of the defrost heater and fan on high air return temperature to ensure cylinder integrity (IROFS1), and (2) an automatic trip of the defrost heater and fan on high station internal air temperature to ensure cylinder integrity (IROFS2).

The frequency index number for the initiating event was determined to be (-2). The NUREG-1520 criteria – no failures of this type in this facility in 30 yrs – applies. This failure frequency index was selected based on evidence from history of similarly designed Urenco European plants, which have a combined plant history of greater than 30 yrs, and have not had a failure of this type.

The failure probability index of (-2) was selected for IROFS1. This corresponds to a single active engineered IROFS per NUREG-1520.

The failure probability index of (-2) was selected for IROFS2. This corresponds to a single active engineered IROFS per NUREG-1520.

Accident Identifier: UF2-2

The initial failure (initiating event) is the failure of the feed purification low temperature take-off station load cell causing the cylinder to be over filled.

For the uncontrolled accident sequence, the over filled cylinder is warmed up to ambient and ruptures in the feed purification low temperature take-off station. Upon cylinder rupture, UF_6 is released to the feed purification low temperature take-off station. Since the station enclosure is not air tight, the UF_6 is released to the UF_6 Handling Area. This event is assumed to have a high consequence to the worker and public.

For the controlled accident sequence, the preventive measure is administratively limit the cylinder fill mass to ensure cylinder integrity by verifying cylinder weight is within specified trending limits once per shift during filling of the cylinder (IROFS38). If the acceptance criterion is not met, then fill of the associated cylinder shall be terminated.

The frequency index number for the initiating event was determined to be (-2). The NUREG-1520 criteria – no failures of this type in this facility in 30 years – applies. This failure frequency index was selected based on evidence from history of similarly designed Urenco European plants, which have a combined plant history of greater than 30 years, and have not had a failure of this type.

The failure probability index of (-3) was selected for IROFS38. This corresponds to an enhanced administrative IROFS per NUREG-1520. IROFS38 is enhanced by requiring independent verification of the IROFS safety function. The IROFS justification for enhanced administrative control is discussed in Section 3.8.3.

Table 3.7-2 Accident Sequence Descriptions

Accident Identified: UF2-3

The initial failure (initiating event) is an operator error that results in an incorrect sampling sequence. This causes excessive flow of UF_6 resulting in the Mobile Feed Sampling Rig mixed-bed trap becoming saturated.

For the uncontrolled accident sequence, a UF_6 plug forms on the discharge line of the vacuum pump, causing high pressure in the vacuum pump and thus failing seals leading to a release of UF_6 to the UF_6 Handling Area. This event was assumed to result in a high consequence to the worker.

For the controlled accident sequence, the mitigative measure is a flow restriction device (IROFSC21) on the suction side of the vacuum pump to ensure in the event of a UF_6 release that worker consequences of inhalation of uranic material and HF are low.

The frequency index number for the initiating event was determined to be (-2). The NUREF-1520 criteria – no failures of this type in this facility in 30 yrs. – applies. This failure frequency index was selected based on evidence from history of similarly designed Urenco European plants, which have a combined plant history of greater than 30 years, and have not had a failure of this type.

A failure probability index of (-3) was selected for IROFSC21. This corresponds to a single passive engineered IROFS per NUREG-1520 criteria.

Accident Identified: MR3-1

(See Table 4.1-1) The initial failure (initiating event) is an error that results in an inadvertent open pressure transducer isolation valve on the upstream side of the pressure transducer being calibrated. This causes excessive flow of UF_6 resulting in the Mobile Pressure Transducer Calibration Rig mixed-bed trap becoming saturated.

For the uncontrolled accident sequence, UF_6 desublimes and a plug forms on the discharge line of the vacuum pump, causing high pressure in the vacuum pump and thus failing seals leading to a release of UF_6. This event is assumed to result in a high consequence to the worker.

For the controlled accident sequence, the mitigative measure is a flow restriction device (IROFSC21) on the suction side of the vacuum pump downstream of the mixed bed trap to ensure in the event of a UF_6 release that worker consequences of inhalation of uranic material and HF are low.

The frequency index number for the initiating event is determined to be (-2). The NUREG-1520 criteria – no failures of this type in this facility in 30 yrs – applies. This failure frequency index is selected based on evidence from history of similarly designed URENCO European plants, which have a combined plant history of greater than 30 yrs.

A failure probability index of (-3) is selected for IROFSC21. This corresponds to single passive engineered IROFS per NUREG-1520 criteria.

Table 3.7-2 Accident Sequence Descriptions

Accident Identified: MR3-2

(See Table 4.1-1) The initial failure (initiating event) is an error that results in an inadvertent open pressure transducer isolation valve on the upstream side of the pressure transducer being calibrated. This causes excessive flow of UF_6 resulting in flow directly through the turbo pump of the Mobile Pressure Transducer Calibration Rig.

For the uncontrolled accident sequence, UF_6 desublimes and a plug forms on the discharge line of the vacuum pump, causing high pressure in the vacuum pump and thus failing seals leading to a release of UF_6. This event is assumed to result in a high consequence to the worker.

For the controlled accident sequence, the mitigative measure is a flow restriction device (IROFSC21) on the suction side of the turbo vacuum pump to ensure in the event of a UF_6 release that worker consequences of inhalation of uranic material and HF are low.

The frequency index number for the initiating event is determined to be (-2). The NUREG-1520 criteria – no failures of this type in this facility in 30 yrs – applies. This failure frequency index is selected based on evidence from history of similarly designed Urenco European plants, which have a combined plant history of greater than 30 yrs.

Accident Identifier: PT2-1

The initial failure (initiating event) is the product low temperature take-off station cold box defrost heater controller failure, causing the cold box heater within the product low temperature take-off station to remain on.

For the uncontrolled accident sequence, the product cylinder over heats and the cylinder hydraulically ruptures due to the expansion of the UF_6. Upon product cylinder rupture, the product cylinder content of UF_6 is released within the product low temperature take-off station. Since the station enclosure is not air tight, the UF_6 is released to the UF_6 Handling Area. This sequence, if uncontrolled, would require a significant time to cause a UF_6 release since the heat up rate is limited by heater capacity. This event is assumed to have a high consequence to the worker and public.

For the controlled accident sequence, the preventive measures are (1) an automatic trip of defrost heater and fan on high air return temperature to ensure cylinder integrity (IROFS1), (2) an automatic trip of defrost heater and fan on high station internal air temperature to ensure cylinder integrity (IROFS2).

The frequency index number for the initiating event was determined to be (-2). The NUREG-1520 criteria - no failures of this type in this facility in 30 yrs - applies. This failure frequency index was selected based on evidence from history of similarly designed Urenco European plants, which have a combined plant history of greater than 30 yrs, and have not had a failure of this type.

A failure probability index of (-2) was selected for IROFS1. This corresponds to single active engineered IROFS per NUREG-1520.

A failure probability index of (-2) was selected for IROFS2. This corresponds to a single active engineered IROFS per NUREG-1520.

Table 3.7-2 Accident Sequence Descriptions

Accident Identifier: PT2-4

The initial failure (initiating event) is the failure of the product low temperature take-off station load cell causing the cylinder to be over filled.

For the uncontrolled accident sequence, the over filled cylinder is then warmed up to ambient and ruptures in the product low temperature take-off station. Upon cylinder rupture, UF_6 is released to the product low temperature take-off station. Since the station enclosure is not air tight, the UF_6 is released to the UF_6 Handling Area. This event is assumed to have a high consequence to the worker and public.

For the controlled accident sequence, the preventive measure is administratively limit the cylinder fill to ensure cylinder integrity by verifying cylinder weight is within specified trending limits once per shift during filling of the cylinder (IROFS38). If the acceptance criterion is not met, then fill of the associated cylinder shall be terminated.

The frequency index number for the initiating event was determined to be (-2). The NUREG-1520 criteria – no failures of this type in this facility in 30 years – applies. This failure frequency index was selected based on evidence from history of similarly designed Urenco European plants, which have a combined plant history of greater than 30 years, and have not had a failure of this type.

A failure probability index of (-3) was selected for IROFS38. This corresponds to an enhanced administrative IROFS per NUREG-1520. IROFS38 is enhanced by requiring independent verification of the IROFS safety function. The IROFS justification for enhanced administrative control is discussed in Section 3.8.3.

Table 3.7-2 Accident Sequence Descriptions

Accident Identifier: PT2-5

The initial failure (initiating event) is hydrocarbon oil (a moderator) is used in place of per fluorinated polyether (PFPE) oil during maintenance of vacuum pumps associated with Product, Ventilated Room and Assay Sampling Systems. The hydrocarbon oil is assumed to enter the process stream and is deposited in a product cylinder.

The condition that needs to be fulfilled to result in a criticality event due to moderator ingress introduced in a product cylinder in the product take-off station is excessive moderator (hydrocarbon oil) is introduced in the product cylinder. The introduction of excessive moderator is due to a vacuum pump improperly filled with hydrocarbon oil.

For the uncontrolled accident sequence, the failure of IROFS30a, administratively limit hydrocarbon oil (moderator mass) in enriched uranium product to ensure moderation control assumptions are maintained by controlling the type of oil used in process vacuum pumps, is assumed. Excess moderator is deposited in a product cylinder in the product take-off station. A criticality event is assumed to result for this accident sequence. This event is assumed to result in a high consequence to the worker and the public.

For the controlled accident sequence, the preventive measures are (1) administratively limit hydrocarbon oil (moderator mass) in enriched uranium product to ensure moderation control assumptions are maintained by verifying, through test prior to addition of oil, that process vacuum pump oil is not hydrocarbon oil (IROFS30b) and (2) administratively limit hydrocarbon oil (moderator mass) in enriched uranium product to ensure moderator control assumptions are maintained by verifying, through test after oil addition prior to placing vacuum pumps in the process system, that process vacuum pump oil is not hydrocarbon oil (IROFS30c). If acceptance criterion is not met, then for IROFS30b, oil shall not be added to the associated process vacuum pump, and for IROFS30c, the associated vacuum pump shall not be placed in the process system.

The frequency index number for the initiating event (IROFS30a failure) was determined to be (-1) which is based on failure of an administrative IROFS with large margin per NUREG-1520.

A failure probability index of (-2) was selected for IROFS30b. This corresponds to an administrative IROFS for routine planned operation per NUREG-1520.

A failure probability index of (-2) was selected for IROFS30c. This corresponds to an administrative IROFS for routine planned operation per NUREG-1520.

Table 3.7-2 Accident Sequence Descriptions

Accident Identifier: PT3-5

(See Table 4.1-1) The initial condition is initial transfer of enriched uranic material during decontamination/waste disposal into a non-safe-by-design container. The worker is required to initially transfer enriched uranic material into safe-by-design containers.

Note that subsequent liquid waste transfers between non-safe-by-design containers are addressed by accident sequences DS1-3, DS2-3, LW1-1, LW2-1, LW3-1, and LW5-1 and subsequent solid waste bulking operations are addressed by accident sequence VR2-7.

The description of this sequence (i.e., the uncontrolled sequence) is the following:

(1) The worker transfers enriched uranic material during decontamination/waste disposal (i.e., from washing flex hose, emptying carbon trap, draining oil from product pump, scraping breakdown materials from product pump internals) into a non-safe-by-design container.

(2) Multiple inappropriate decontamination/waste disposal activities and/or failures occur (e.g., multiple occurrences of failure to use safe-by-design containers).

For the controlled accident sequence, the preventive measure is administratively restrict an independent parameter of the criticality sequence to ensure subcritical configuration by preventing additional transfer of enriched uranic material to another container if that container contains enriched uranic material and is a non-safe-by-design container (IROFS15) prior to the transfer of the enriched uranic material into a container. If the acceptance criterion are not met, then the transfer of enriched uranic material to the container shall not be initiated.

The frequency index number for the initiating event was determined to be (-2). The NUREG-1520 criteria - no failures of this type in this facility in 30 yrs – applies. This failure frequency index was selected based on evidence from history of similarly designed Urenco European plants, which have a combined plant history of greater than 30 yrs, and have not had a failure of this type.

A failure probability index of (-3) was selected for IROFS15, an enhanced administrative IROFS consistent with NUREG 1520. IROFS15 is enhanced by requiring independent verification of the IROFS safety function. The IROFS justification for enhanced administrative control is discussed in Section 3.8.3.

Table 3.7-2 Accident Sequence Descriptions

Accident Identifier: PT5-1

The initial failure (initiating event) is an operator error that results in an incorrect sampling sequence. This causes excessive flow of UF_6 resulting in the Assay Sampling rig mixed-bed trap becoming saturated.

For the uncontrolled accident sequence, a UF_6 plug forms on the discharge line of the vacuum pump, causing high pressure in the vacuum pump and thus failing seals leading to a release of UF_6 to the process services corridor. This event was assumed to result in a high consequence to the worker.

For the controlled accident sequence, the mitigative measure is a flow restriction device on the suction side of the vacuum pump to ensure in the event of a UF_6 release that worker consequences of inhalation of uranic material and HF are low.

The frequency index number for the initiating event was determined to be (-2). The NUREG-1520 criteria – no failures of this type in this facility in 30 yrs – applies. This failure frequency index was selected based on evidence from history of similarly designed Urenco European plants, which have a combined plant history of greater than 30 yrs, and have not had a failure of this type.

A failure probability index of (-3) was selected for IROFSC21. This corresponds to a single passive engineered IROFS per NUREG-1520 criteria.

Table 3.7-2 Accident Sequence Descriptions

Accident Identifier: PB1-1

(See Table 4.1-1) The initial failure (initiating event) is the blending donor station heater controller fails causing the heater within the blending donor station to remain on.

For the uncontrolled accident sequence, the donor cylinder over heats and the cylinder hydraulically ruptures due to the expansion of the UF_6. Upon cylinder rupture, the donor cylinder content of UF_6 is released within the donor station. Since the station enclosure is not air tight, the UF_6 is released to the Blending and Liquid Sampling Area. This sequence, if uncontrolled, would require significant time to cause a UF_6 release since the heat up rate is limited by the heater capacity. This event is assumed to have a high consequence to the worker and public.

For the controlled accident sequence, the preventive measures are (1) an automatic trip of station heaters on high station internal air temperature to ensure cylinder integrity (IROFS4) and (2) an automatic trip of station heaters on high station internal air temperature to ensure cylinder integrity (IROFS5).

The frequency index number for the initiating event was determined to be (-2). The NUREG-1520 criteria – no failures of this type in this facility in 30 yrs – applies. This failure frequency index was selected based on evidence from history of similarly designed Urenco European plants, which have a combined plant history of greater than 30 yrs, and have not had a failure of this type.

The failure probability index of (-2) was selected for IROFS4. This corresponds to a single active engineered IROFS per NUREG-1520.

The failure probability index of (-2) was selected for IROFS5. This corresponds to a single active engineered IROFS per NUREG-1520.

Acident Identifier: PB1-3

(See Table 4.1-1) The initiating event allows placing product 30B cylinders into a non-safe criticality interaction arrangement (i.e., a non-analyzed condition). The initial condition is an operator would have stacked a product cylinder on another product cylinder in the Blending and Liquid Sampling Area

For the uncontrolled accident sequence, product cylinders are stacked more than one high next to another product cylinder. A criticality event is assumed to result for this accident sequence. This event is assumed to result in a high consequence to the worker and public.

For the controlled accident sequence, the preventive measure is (IROFS45) to ensure subcritical geometry, prior to moving a cylinder containing enriched uranium in the CRDB or the Blending and Liquid Sampling Area, verify that the stored cylinders containing enriched uranium in these areas are in a horizontal, co-planar (i.e., non-stacked), condition and that no other cylinder containing enriched uranium is in movement in the associated area. If the acceptance criterion are not met, then the cylinder containing enriched uranium shall not be moved.

The frequency index number for the initiating event was determined to be (-2). The NUREG-1520 criteria – no failures of this type in this facility in 30 yrs – applies. This failure frequency index was selected based on evidence from history of similarly designed Urenco European plants, which have a combined plant history of greater than 30 yrs, and have not had a failure of this type.

A failure probability index of (-3) was selected for IROFS45. This corresponds to an enhanced administrative IROFS per NUREG 1520. IROFS45 is enhanced by requiring independent verification of the IROFS safety function. The IROFS justification for enhanced administrative control is discussed in Section 3.8.3.

Table 3.7-2 Accident Sequence Descriptions

Accident Identifier: PB2-1

(See Table 4.1-1) The initial failure (initiating event) is the blending receiver station cold box defrost heater controller failure, causing the heater within the receiver station to remain on.

For the uncontrolled accident sequence, the product cylinder over heats and the cylinder hydraulically ruptures due to the expansion of the UF_6. Upon product cylinder rupture, the product cylinder content of UF_6 is released within the receiver station. Since the station enclosure is not air tight, the UF_6 is released to the Blending and Liquid Sampling Area. This sequence, if uncontrolled, would require a significant time to cause a UF_6 release since the heat up is limited by heater capacity. This event is assumed to have a high consequence to the worker and public.

For the controlled accident sequence, the preventive measures are (1) an automatic trip of defroster heater and fan on high air return temperature to ensure cylinder integrity (IROFS1), (2) an automatic trip of defroster heater and fan on high station internal air temperature to ensure cylinder integrity (IROFS2).

The frequency index number for the initiating event was determined to be (-2). The NUREG-1520 criteria - no failures of this type in this facility in 30 yrs - applies. This failure frequency index was selected based on evidence from history of similarly designed Urenco European plants, which have a combined plant history of greater than 30 yrs, and have not had a failure of this type.

A failure probability index of (-2) was selected for IROFS1. This corresponds to single active engineered IROFS per NUREG-1520.

A failure probability index of (-2) was selected for IROFS2. This corresponds to a single active engineered IROFS per NUREG-1520.

Accident Identifier: PB2-2

(See Table 4.1-1) The initial failure (initiating event) is excessive moderator introduced into the receiver cylinder before being put in the blending receiver station.

The condition that needs to be fulfilled to result in a criticality event due to moderator ingress introduced in a receiver cylinder before and subsequently placed into the blending receiver station is excessive moderator (hydrocarbon oil and water) present in the receiver cylinder.

For the uncontrolled accident sequence, excessive moderator (hydrocarbon and water) is present in the receiver cylinder before placed into a blending receiver station. This could be due to excessive hydrocarbon oil and water present in new or cleaned cylinders. The receiver cylinder is placed into the blending receiver station and placed online. This event is assumed to result in a high consequence to the worker and the public.

For the controlled sequence, the preventive measure is administratively limit moderator mass (oil and water) in cylinders containing enriched uranic material to ensure sub criticality by allowing no visible oil and by limiting cylinder vapor pressure prior to introducing product (IROFS16a). If the acceptance criteria are not met, then product shall not be introduced into the associated cylinder.

The frequency index number for the initiating event was determined to be (-2). The NUREG-1520 criteria – no failures of this type in this facility in 30 yrs – applies. This failure frequency index was selected based on evidence from history of similarly designed Urenco European plants, which have a combined plant history of greater than 30 yrs, and have not had a failure of this type.

The failure probability index number of (-3) was selected for IROFS16a. This frequency probability index number corresponds to an enhanced administrative IROFS per NUREG-1520. IROFS16a is enhanced by requiring independent verification of the IROFS safety function. The IROFS justification for enhanced administrative control is discussed in Section 3.8.3.

Table 3.7-2 Accident Sequence Descriptions

Accident Identifier: PB2-4

(See Table 4.1-1) The initial failure (initiating event) is the failure of the blending receiver low temperature take-off station load cell causing the cylinder to be over filled.

For the uncontrolled sequence, the over filled cylinder is then warmed up to ambient and ruptures in the blending receiver low temperature take-off station. Upon cylinder rupture, UF_6 is released to the blending receiver low temperature take-off station. Since the station enclosure is not air tight, the UF_6 is released to the Blending and Liquid Sampling Area. This event is assumed to have a high consequence to the worker and public.

For the controlled accident sequence, the preventive measure is administratively limit the cylinder fill mass to ensure cylinder integrity by verifying cylinder weight is within specified trending limits once per shift during filling of the cylinder (IROFS38). If the acceptance criteria is not met, then fill of the associated cylinder shall be terminated.

The frequency index number for the initiating event was determined to be (-2). The NUREG-1520 criteria – no failures of this type in this facility in 30 yrs – applies. This failure frequency index was selected based on evidence from history of similarly designed Urenco European plants, which have a combined plant history of greater than 30 yrs, and have not had a failure of this type.

The failure probability index of (-3) was selected for IROFS38. This corresponds to an enhanced administrative IROFS per NUREG-1520. IROFS38 is enhanced by requiring independent verification of the IROFS safety function. The IROFS justification for enhanced administrative control is discussed in Section 3.8.3.

Table 3.7-2 Accident Sequence Descriptions

Accident Identifier: PB2-6

(See Table 4.1-1) The initial failure (initiating event) is hydrocarbon oil (a moderator) is used in place of per fluorinated polyether (PFPE) oil during maintenance of Ventilated Room and Blending and Liquid Sampling System vacuum pumps. The hydrocarbon oil is assumed to enter the process stream and is deposited in a product cylinder.

The condition that needs to be fulfilled to result in a criticality event due to moderator ingress introduced in a product cylinder in the product take-off station is excessive moderator (hydrocarbon oil) is introduced in the product cylinder. The introduction of excessive moderator is due to a vacuum pump improperly filled with hydrocarbon oil.

For the uncontrolled accident sequence, the failure of IROFS30a, administratively limit hydrocarbon oil (moderator mass) in enriched uranium product to ensure moderation control assumptions are maintained by controlling the type of oil used in process vacuum pumps, is assumed. Excess moderator is deposited in a product cylinder in plant into a product take-off station. A criticality event is assumed to result for this accident sequence. This event is assumed to result in a high consequence to the worker and the public.

For the controlled accident sequence, the preventive measures are (1) administratively limit hydrocarbon oil (moderator mass) in enriched uranium product to ensure moderation control assumptions are maintained by verifying, through test prior to addition of oil, that process vacuum pump oil is not hydrocarbon oil (IROFS30b) and (2) administratively limit hydrocarbon oil (moderator mass) in enriched uranium product to ensure moderator control assumptions are maintained by verifying, through test (after oil addition) prior to placing vacuum pumps in the process system, that process vacuum pump oil is not hydrocarbon oil (IROFS30c). If the acceptance criteria is not met, then for IROFS30b, oil shall not be added to the associated process vacuum pump, and for IROFS30c, the associated vacuum pump shall not be placed in the process system.

The frequency index number for the initiating event (IROFS30a failure) was determined to be (-1) which is based on failure of an administrative IROFS with large margin per NUREG-1520.

A failure probability index of (-2) was selected for IROFS30b. This corresponds to an administrative IROFS for routine planned operation per NUREG-1520.

A failure probability index of (-2) was selected for IROFS30c. This corresponds to an administrative IROFS for routine planned operation per NUREG-1520.

Table 3.7-2 Accident Sequence Descriptions

Accident Identifier: PB3-3

(See Table 4.1-1) The initial failure (initiating event) is the Blending and Sampling Vent carbon trap becomes saturated with UF_6 caused by a small UF_6 leak through a blending system cold trap valve.

For the uncontrolled accident sequence, a UF_6 plug forms on the discharge of the vacuum pump, causing high pressure in the vacuum pump and thus failing seals leading to a release of UF_6 to the Blending and Liquid Sampling Area. This event has been calculated to result in a high consequence to the worker.

For the controlled accident sequence, the preventive measure is an automatic trip of the vacuum pump on carbon trap high weight to ensure the carbon trap does not become saturated with UF_6 (IROFS3) and the mitigative measure is a flow restriction to ensure, in the event of a postulated release, worker consequences of inhalation of uranic material and HF are low (IROFS47a). As a result of IROFS47a, the consequence analysis shows that the consequences have been mitigated to an intermediate category (2).

The frequency index number for the initiating event was determined to be (-2). The NUREG-1520 criteria – no failures of this type in this facility in 30 yrs – applies. This failure frequency index was selected based on evidence from history of similarly designed Urenco European plants, which have a combined plant history of greater than 30 yrs, and have not had a failure of this type.

A failure probability index of (-2) was selected for IROFS3. This corresponds to a single active engineered IROFS per NUREG-1520 criteria.

The failure probability index of (-3) was selected for IROF47a. This corresponds to a single passive engineered IROFS per NUREG-1520.

Accident Identifier: PB4-1

(See Table 4.1-1) The initial failure (initiating event) is the product liquid sampling autoclave heater failure (heat off) followed by reheat. Solidification of UF_6 in the sampling manifold isolates pressure trips. Upon reheat, the sampling manifold ruptures.

For the uncontrolled accident sequence, (autoclave pressure boundary not credited) UF_6 from the sampling manifold and the liquid UF_6 in the product cylinder is released to the Blending and Liquid Sampling Area. This event is assumed to result in a high consequence to the worker and public.

For the controlled accident sequence, the preventive measure is a design feature to maintain Product Liquid Sampling Autoclave leak tight integrity (IROFS10).

The frequency index number for the initiating event was determined to be (-2). The NUREG-1520 criteria – no failures of this type in this facility in 30 yrs – applies. This failure frequency index was selected based on evidence from history of similarly designed Urenco European plants, which have a combined plant history of greater than 30 yrs, and have not had a failure of this type.

A failure probability index of (-3) was selected for IROFS10. This corresponds to a single passive engineered IROFS per NUREG-1520.

Table 3.7-2 Accident Sequence Descriptions

Accident Identifier: PB4-2

(See Table 4.1-1) The initial failure (initiating event) is the product liquid sampling autoclave heater controller failure causing the heater to remain on.

For the uncontrolled accident sequence (autoclave pressure boundary credited), the product cylinder over heats and the cylinder hydraulically ruptures due to the expansion of the UF_6. Upon cylinder rupture, the product cylinder content of UF_6 is released within the liquid sampling autoclave pressure boundary. The heater continues to input heat into the liquid sampling autoclave causing the autoclave pressure boundary to rupture. HF is released to the Blending and Liquid Sampling Area. This event is assumed to result in a high consequence to the worker and public.

For the controlled accident sequence, the preventive measures are (1) an automatic trip of the autoclave heater and fan on autoclave high internal air temperature to ensure Product Liquid Sampling Autoclave integrity (IROFS11) and (2) an automatic trip of the autoclave heater and fan on autoclave high internal air pressure to ensure Product Liquid Sample Autoclave integrity (IROFS12).

The frequency index number for the initiating event was determined to be (-2). The NUREG-1520 criteria – no failures of this type in this facility in 30 yrs – applies. This failure frequency index was selected based on evidence from history of similarly designed Urenco European plants, which have a combined plant history of greater than 30 yrs, and have not had a failure of this type.

A failure probability index of (-2) was selected for IROFS11. This corresponds to a single active engineered IROFS per NUREG-1520.

A failure probability index of (-2) was selected for IROFS12. This corresponds to a single active engineered IROFS per NUREG-1520.

Accident Identifier: PB4-3

(See Table 4.1-1) The initial failure (initiating event) is the operator error of leaving the sampling manifold purge valve open and blind flange not fitted. Upon liquid sample heat up and tipping of the liquid sampling autoclave, the sampling manifold releases liquid UF_6 into the autoclave.

For the uncontrolled accident sequence (autoclave pressure boundary not credited), UF_6 from the sampling manifold and the liquid UF_6 in the product cylinder is released to the Blending and Liquid Sampling Area. This event is assumed to result in a high consequence to the worker and public.

For the controlled accident sequence, the preventive measure is a design feature to maintain Product Liquid Sampling Autoclave leak tight integrity (IROFS10).

The frequency index number for the initiating event was determined to be (-2). The NUREG-1520 criteria – no failures of this type in this facility in 30 yrs – applies. This failure frequency index was selected based on evidence from operator error history at similarly designed Urenco European plants, which have a combined plant history of greater than 30 yrs, and have not had a failure of this type.

A failure probability index of (-3) was selected for IROFS10. This corresponds to a single passive engineered IROFS per NUREG-1520.

Table 3.7-2 Accident Sequence Descriptions

Accident Identifier: PB4-4

(See Table 4.1-1) The initial failure (initiating event) is an over filled product cylinder heated in the sampling autoclave.

For the uncontrolled accident sequence (autoclave pressure boundary not credited), the over filled product cylinder is heated in the sampling autoclave followed by cylinder rupture. Upon cylinder rupture, the product content of UF_6 cylinder is released to the Blending and Liquid Sampling Area. This event is assumed to result in a high consequence to the worker and public.

For the controlled accident sequence, the preventive measures are (1) administratively limit the cylinder fill mass to ensure cylinder integrity of a product cylinder prior to placement and heating of the associated cylinder in the Product Liquid Sampling Autoclave (IROFS42) and (2) design feature to maintain Product Liquid Sampling Autoclave leak tight integrity (IROFS10). If the acceptance criteria are not met, then the associated product cylinder shall not be heated.

The frequency index number for the initiating event was determined to be (-2). The NUREG-1520 criteria – no failures of this type in this facility in 30 yrs – applies. This failure frequency index was selected based on evidence from history of similarly designed Urenco European plants, which have a combined plant history of greater than 30 yrs, and have not had a failure of this type.

A failure probability index of (-2) was selected for IROFS42. This corresponds to an administrative IROFS for routine planned operations per NUREG-1520.

A failure probability index of (-3) was selected for IROFS10. This corresponds to a single passive engineered IROFS per NUREG-1520.

Table 3.7-2 Accident Sequence Descriptions

Accident Identifier: VR1-1

(See Table 4.1-1) The initial failure (initiating event) is the carbon trap becomes saturated with UF_6 caused by a small UF_6 leak through a process valve in the vessel pressure test/valve change rig. Continued UF_6 leakage to the carbon trap results in UF_6 released into the CRDB GEVS. The leak into the CRDB GEVS system is assumed to exist for a significant period of time to allow a sufficient amount of accumulation on the filters to form a critical mass.

The combination of these conditions is assumed to lead to an accumulation of fissile material on the CRDB GEVS filters resulting in a criticality event.

For the uncontrolled accident sequence, UF_6 (product) is discharged to the CRDB GEVS and is collected UO_2F_2 on the CRDB GEVS HEPA forming a critical mass of fissile material on the filter over a long period of time. A criticality event is assumed to result for this accident sequence. This event is assumed to have a high consequence to the worker and public.

For the controlled accident sequence, the preventive measures are (1) automatic trip of the vacuum pump on carbon trap high weight to ensure the carbon trap does not become saturated with UF_6 (IROFS3) and (2) an automatic trip of the CRDB GEVS on ^{235}U selective high-high gamma to ensure no more than a subcritical mass deposited on the filter (IROFS21).

The frequency index number for the initiating event was determined to be (-2). The NUREG-1520 criteria – no failures of this type in this facility in 30 yrs – applies. This failure frequency index was selected based on evidence from history of similarly designed Urenco European plants, which have a combined plant history of greater than 30 yrs, and have not had a failure of this type.

A failure probability index of (-2) was selected for IROFS3. This corresponds to a single active engineered IROFS per NUREG-1520 criteria.

A failure probability index of (-2) was selected for IROFS21. This corresponds to a single active engineered IROFS per NUREG-1520 criteria.

Table 3.7-2 Accident Sequence Descriptions

Accident Identifier: VR1-2

(See Table 4.1-1) The initial failure (initiating event) is an operator error in excessively opening the cold trap outlet throttle valve in the cylinder vent system which results in high UF_6 flow through the carbon trap. A high UF_6 flow to the carbon trap results in high temperature in the carbon trap and release of excessive UF_6 into the CRDB GEVS. The leak into the CRDB GEVS is assumed to exist for a significant period of time to allow a sufficient amount of accumulation on the filter to form a critical mass. The combination of these conditions is assumed to lead to an accumulation of fissile material on the CRDB GEVS filter resulting in a criticality event.

For the uncontrolled accident sequence, UF_6 (product) is discharged to the CRDB GEVS and is collected on the CRDB GEVS HEPA filters forming a critical mass of fissile material on the filter over a long period of time. A criticality event is assumed to result for this accident sequence. This event is assumed to have a high consequence to the worker and public.

For the controlled accident sequence, the preventive measures are (1) an automatic trip of the vacuum pump on carbon trap high temperature to ensure the carbon trap does not pass excessive UF_6 (IROFS22) and (2) an automatic trip of the CRDB GEVS on ^{235}U selective high-high gamma to ensure no more than a subcritical mass deposited on the filter (IROFS21).

The frequency index number for the initiating event was determined to be (-2). The NUREG-1520 criteria – no failures of this type in this facility in 30 yrs – applies. This failure frequency index was selected based on evidence from history of similarly designed Urenco European plants, which have a combined plant history of greater than 30 yrs, and have not had a failure of this type.

A failure probability index of (-2) was selected for IROFS22. This corresponds to a single active engineered IROFS per NUREG-1520 criteria.

A failure probability index of (-2) was selected for IROFS21. This corresponds to a single active engineered IROFS per NUREG-1520 criteria.

Accident Identifier: VR1-3

(See Table 4.1-1) The initial failure (initiating event) is the failure of a cylinder superior valve or the flexible piping of a cylinder containing UF_6 undergoing a cylinder pressure test after repair/replacement of a leaking cylinder component.

For the uncontrolled accident sequence, a slight over pressure release of UF_6 exposes the worker. This event was calculated to result in a high consequence to the worker and low consequence to the public.

For the controlled accident sequence, the preventive measure is administrative use of personnel respiratory protection to ensure that inhalation of uranic material and HF consequences are low when performing positive pressure testing of a UF_6 cylinder after repair/replacement of a leaking cylinder component (IROFS23a). If personnel respiratory protection is not used, then the positive pressure testing of the UF_6 cylinder shall not be performed.

The frequency index number for the initiating event was determined to be (-2). The NUREG-1520 criteria - no failures of this type in this facility in 30 yrs - applies. This failure frequency index was selected based on evidence from history of similarly designed Urenco European plants, which have a combined plant history of greater than 30 yrs, and have not had a failure of this type.

A failure probability index of (-3) was selected for IROFS23a. This corresponds to an enhanced administrative IROFS per NUREG-1520 criteria. IROFS23a is enhanced by requiring independent verification of the IROFS safety function. The IROFS justification for enhanced administrative control is discussed in Section 3.8.3.

Table 3.7-2 Accident Sequence Descriptions

Accident Identifier: VR1-5

(See Table 4.1-1) The initial failure (initiating event) is the vent subsystem carbon trap becoming saturated with UF_6 caused by a small UF_6 leak through a ventilated room mobile pump and trap rig cold trap valve.

For the uncontrolled accident sequence, a UF_6 plug forms on the discharge of the vacuum pump, causing high pressure in the vacuum pump and thus failing seals leading to a release of UF_6 to the Ventilated Room. This event has been calculated to result in a high consequence to the worker.

For the controlled accident sequence, the preventive measure is an automatic trip of the vacuum pump on carbon trap high weight to ensure the carbon trap does not become saturated with UF_6 (IROFS3) and the mitigative measure is a flow restriction to ensure, in the event of a postulated release, worker consequences of inhalation of uranic material and HF are low (IROFS47b). As a result of IROFS47b, the consequence analysis shows that the consequences have been mitigated to an intermediate category (2).

The frequency index number for the initiating event was determined to be (-2). The NUREG-1520 criteria - no failures of this type in this facility in 30 yrs - applies. This failure frequency index was selected based on evidence from history of similarly designed Urenco European plants, which have a combined plant history of greater than 30 yrs, and have not had a failure of this type.

A failure probability index of (-2) was selected for IROFS3. This corresponds to a single active engineered IROFS per NUREG-1520 criteria.

The failure probability index of (-3) was selected for IROF47b. This corresponds to a single passive engineered IROFS per NUREG-1520.

Accident Identifier: VR2-1

(See Table 4.1-1) The initial failure (initiating event) is a loss of containment of a chemical trap and pouring of the contents of the trap into the Ventilated Room. The cause could be operator error in unloading a carbon trap or impact to a carbon trap.

For the uncontrolled accident sequence, a release of carbon fines containing uranic material from the trap exposes the worker through inhalation of uranic material. This event was calculated to result in an intermediate consequence to the worker and low consequence to the public.

For the controlled accident sequence, the preventive measure is administrative use of personnel respiratory protection to ensure that inhalation of uranic material consequence are low when handling carbon trap material containing uranic material (IROFS23b). If personnel respiratory protection is not used, then carbon trap material containing uranic material shall not be handled.

The frequency index number for the initiating event was determined to be (-2). The NUREG-1520 criteria – no failures of this type in this facility in 30 yrs – applies. This failure frequency index was selected based on evidence from history of similarly designed Urenco European plants, which have a combined plant history of greater than 30 yrs, and have not had a failure of this type.

A failure probability index of (-2) was selected for IROFS23b. This corresponds to an administrative IROFS for routine planned operations per NUREG-1520 criteria.

Table 3.7-2 Accident Sequence Descriptions

Accident Identifier: VR2-2

(See Table 4.1-1) The initial failure (initiating event) is a loss of containment of a chemical dump trap and pouring of the contents of the trap into the ventilated room. The cause could be operator error in unloading a chemical dump trap or impact to a chemical dump trap.

For the uncontrolled accident sequence, a release of sodium fluoride (NaF) fines containing uranic material from the trap exposes the worker through inhalation of uranic material. This event was calculated to result in a high consequence to the worker and low consequence to the public.

For the controlled accident sequence, the preventive measures are (1) administrative use of personnel respiratory protection to ensure that inhalation of uranic material consequence is low when handling NaF trap material containing uranic material (IROFS23b) and (2) administrative establishment of airflow away from the worker to ensure inhalation of uranic material consequences are low when handling NaF trap material containing uranic material (IROFS24a). If personnel respiratory protection is not used or if air flow away from the worker is not established, then NaF trap material containing uranic material shall not be handled.

The frequency index number for the initiating event was determined to be (-2). The NUREG-1520 criteria – no failures of this type in this facility in 30 yrs – applies. This failure frequency index was selected based on evidence from history of similarly designed Urenco European plants, which have a combined plant history of greater than 30 yrs, and have not had a failure of this type.

A failure probability index of (-2) was selected for IROFS23b. This corresponds to an administrative IROFS for routine planned operations per NUREG-1520 criteria.

A failure probability index of (-2) was selected for IROFS24a. This corresponds to an administrative IROFS for routine planned operations per NUREG-1520 criteria.

Table 3.7-2 Accident Sequence Descriptions

Accident Identifier: VR2-7

(See Table 4.1-1) The initiating event allows the accumulation of sufficient uranic mass to cause criticality in a solid waste container. The initial condition is that the operator would transfer carbon containing enriched uranic material to a non-safe-by design solid waste container and fails to control the uranic matter in the waste container, (i.e., failure of IROFS31a: administratively limit ^{235}U mass in non-safe-by-design solid waste containers to ensure sub criticality by performing independent sampling and analysis).

For the uncontrolled accident sequence, sufficient uranium mass accumulates in the solid waste container through transfer of carbon containing enriched uranic material from the carbon chemical traps. A criticality event is assumed to result for this accident sequence. A criticality event is assumed to result in a high consequence to the worker and public.

For the controlled accident sequence, the preventive measures are: (1) administratively limit ^{235}U mass in non-safe-by-design solid waste containers to ensure a subcritical mass (IROFS31b, i.e., by independent sample and assay analysis to determine ^{235}U mass prior to transferring and bulk storing enriched uranic material in solid waste containers) and (2) administratively limit the calculated ^{235}U mass waste storage to ensure a subcritical mass (IROFS31c, i.e., using bookkeeping procedures to determine the ^{235}U mass prior to transferring and bulk storing enriched uranic material in solid waste containers). For each preventive measure, if the acceptance criterion is not met, the transfer of enriched uranic material shall not be initiated.

The frequency index number for the initiating event (IROFS31a) was determined to be (-1). This frequency probability index corresponds to a failure of redundant IROFS per NUREG-1520.

A failure probability index of (-2) was selected for IROFS31c. This corresponds to an administrative IROFS for planned routine operation per NUREG-1520.

A failure probability index of (-2) was selected for IROFS31b. This corresponds to an administrative IROFS for planned routine operation per NUREG-1520.

Table 3.7-2 Accident Sequence Descriptions

Accident Identifier: FR1-1

(See Table 4.1-1) The accident sequence is the combination of numerous conditions assumed to lead to a criticality in a waste container being transported. This description of this sequence is the following:

(1) The fissile material in the waste container and interacting components would be a uranyl fluoride/water mixture at an H/U atomic ratio near optimum moderation,

(2) The waste container, as well as other interacting components, would be nearly or completely filled with the above material at a high enough enrichment to achieve a configuration favorable for criticality (Urenco European experience is that less than 10% of waste container enrichment is at product enrichment levels), and

(3) The waste container would have to interact (i.e., proximity limit not maintained) with greater than one component containing fissile material, as interaction of the waste container and one other component is subcritical.

The movement of waste containers is part of normal operations; the abnormal operating condition pertaining to the waste container concerns the assumption that the waste container and interacting component are filled with product UF_6 breakdown material at optimum moderation conditions. This would be extremely unlikely for a single waste container and even more unlikely for more than one component.

For the uncontrolled accident sequence, conditions (1) through (3) above must be met to result in a potential criticality event. For this accident sequence, a criticality event was assumed. A criticality event is assumed to result in a high consequence to the worker and public.

For the controlled accident sequence, the preventive measure is to administratively restrict proximity of vessels in non-designed locations containing enriched uranic material to ensure subcritical configuration by verifying the use of a safe-by-design transfer frame prior to movement of the associated waste container containing enriched uranic material (IROFS14a). If the acceptance criteria is not met, then the associated waste container containing enriched uranic material shall not be moved.

The frequency index number for the initiating event was determined to be (-2). The NUREG-1520 criteria – no failures of this type in this facility in 30 yrs – applies. This failure frequency index was selected based on evidence from history of similarly designed Urenco European plants, which have a combined plant history of greater than 30 yrs, and have not had a failure of this type.

A failure probability index of (-3) was selected for IROFS14a. This corresponds to an enhanced administrative IROFS per NUREG-1520. IROFS14a is enhanced by requiring independent verification of the IROFS safety function. The IROFS justification for enhanced administrative control is discussed in Section 3.8.3.

Table 3.7-2 Accident Sequence Descriptions

Accident Identifier: FR1-2

(See Table 4.1-1) The accident sequence is the combination of numerous conditions assumed to lead to a criticality in a waste container being stored. This description of this sequence is the following:

(1) The fissile material in the waste container and interacting components would be a uranyl fluoride/water mixture at an H/U atomic ratio near optimum moderation,

(2) The waste container, as well as other interacting components, would be nearly or completely filled with the above material at a high enough enrichment to achieve a configuration favorable for criticality (Urenco European experience is that less than 10% of waste container enrichment is at product enrichment levels), and

(3) The waste container would have to interact (i.e., proximity limit not maintained) with greater than one component containing fissile material, as interaction of the waste container and one other component is subcritical.

For the uncontrolled accident sequence, conditions (1) through (3) above, above must be met to result in a potential criticality event. For this accident sequence, a criticality event was assumed. A criticality event is assumed to result in a high consequence to the worker and public.

For the controlled accident sequence, the preventive measure is administratively restrict proximity of vessels in non-designed locations containing enriched uranic material to ensure subcritical configuration by verifying, prior to moving a waste container containing enriched uranic material within 180 cm of the associated storage array, associated storage array condition is acceptable for storage of the waste container and no component containing enriched uranic material is in movement in the designated area (IROFS14b). If the acceptance criteria are not met, then the associated waste container shall not be moved.

The frequency index number for the initiating event was determined to be (-2). The NUREG-1520 criteria – no failures of this type in this facility in 30 yrs – applies. This failure frequency index was selected based on evidence from history of similarly designed Urenco European plants, which have a combined plant history of greater than 30 yrs, and have not had a failure of this type.

A failure probability index of (-3) was selected for IROFS14b. This corresponds to an enhanced administrative IROFS per NUREG-1520. IROFS14b is enhanced by requiring independent verification of the IROFS safety function. The IROFS justification for enhanced administrative control is discussed in Section 3.8.3.

Accident Identifier: FR2-1

(See Table 4.1-1) This accident sequence is identical to sequence FR1-1, except it is located in the hydrocarbon removal portion of PFPE Oil Recovery System.

Accident Identifier: FR2-2

(See Table 4.1-1) This accident sequence is identical to sequence FR1-2, except it is located in the hydrocarbon removal portion of PFPE Oil Recovery System.

Accident Identifier: DS1-1

(See Table 4.1-1) This accident sequence is identical to sequence FR1-1, except it is located in the Equipment Decontamination System.

Table 3.7-2 Accident Sequence Descriptions

Accident Identifier: DS1-2

(See Table 4.1-1) This accident sequence is identical to sequence FR1-2, except it is located in the Equipment Decontamination System.

Accident Identifier: DS1-3

(See Table 4.1-1) The initial failure (initiating event) is the accumulation of sufficient uranium mass to cause criticality in the decontamination tank.

The initial set of conditions, or combination of conditions, that needs to be fulfilled to result in a criticality event in the decontamination tanks include the following:

(1) A significant number of components containing uranium with product enrichments would need to be processed to provide the uranium levels needed to create favorable conditions for criticality, and

(2) The operator would have to fail to notice the incremental rise in uranium concentration from the sampling of the tank (failure of IROFS19c, administratively limit the measured uranic mass inventory to ensure a subcritical mass by performing independent sampling and measurement).

For the uncontrolled accident sequence, sufficient uranium mass accumulates in the decontamination tank. A criticality event is assumed to result for this accident sequence. A criticality event is assumed to result in a high consequence to the worker and public.

For the controlled accident sequence, the preventive measures are (1) administratively limit the calculated tank uranic mass inventory to ensure a subcritical mass (IROFS19a, i.e., using bookkeeping procedures to determine calculated tank uranic mass inventory prior to transfer of enriched uranic material to the associated tank) and (2) administratively limit measured uranic mass inventory to ensure a subcritical mass (IROFS19d, i.e., by independent sampling and measurement to determine tank uranic mass inventory prior to transfer of enriched uranic material to the associated tank). For each preventive measure, if the acceptance criterion is not met, then transfer of enriched uranic material shall not be initiated.

The frequency index number for the initiating event, failure of IROFS19c was determined to be (-1). This is based on failure of a redundant administrative IROFS per NUREG-1520.

A failure probability index of (-2) was selected for IROFS19a. This corresponds to an administrative IROFS for routine planned operations per NUREG-1520.

A failure probability index of (-2) was selected for IROFS19d. This corresponds to an administrative IROFS for routine planned operations per NUREG-1520.

Accident Identifier: DS2-1

(See Table 4.1-1) This accident sequence is identical to sequence FR1-1, except it is located in the Flexible Hose Decontamination System.

Accident Identifier: DS2-2

(See Table 4.1-1) This accident sequence is identical to sequence FR1-2, except it is located in the Flexible Hose Decontamination System.

Table 3.7-2 Accident Sequence Descriptions

Accident Identifier: DS2-3

(See Table 4.1-1) The initial failure (initiating event) is the accumulation of sufficient uranium mass in the first rinse tank to cause criticality.

The initial set of conditions, or combination of conditions, that needs to be fulfilled to result in a criticality event in the first rinse tank include the following:

(1) A significant number of components containing uranium with product enrichments would need to be processed to provide the uranium levels needed to create favorable conditions for criticality, and

(2) The operator would have to fail to notice the incremental rise in uranium concentration from the sampling of the tank (failure of IROFS19c, administratively limit the measured uranic mass inventory to ensure a subcritical mass by performing independent sampling and measurement).

For the uncontrolled accident sequence, sufficient uranium mass accumulates in the first rinse tank. A criticality event is assumed to result in a high consequence to the worker and public.

For the controlled accident sequence, the preventive measures are (1) administratively limit the calculated tank uranic mass inventory to ensure a subcritical mass (IROFS19a, i.e., using bookkeeping procedures to determine calculated tank uranic mass inventory prior to transfer of enriched uranic material to the associated tank) and (2) administratively limit measured uranic mass inventory to ensure a subcritical mass (IROFS19d, i.e., by independent sampling and measurement to determine tank uranic mass inventory prior to transfer of enriched uranic material of the associated tank). For each preventive measure, if the acceptance criteria is not met, the transfer of enriched uranic material shall not be initiated.

The frequency index number for the initiating event, failure of IROFS19c was determined to be (-1). This is based on failure of a redundant administrative IROFS per NUREG-1520.

A failure probability index of (-2) was selected for IROFS19a. This corresponds to an administrative IROFS for routine planned operation per NUREG-1520.

A failure probability index of (-2) was selected for IROFS19d. This corresponds to an administrative IROFS for routine planned operations per NUREG-1520.

Accident Identifier: DS3-1

(See Table 4.1-1) This accident sequence is identical to sequence FR1-1.

Accident Identifier: DS3-2

(See Table 4.1-1) This accident sequence is identical to sequence FR1-2.

Table 3.7-2 Accident Sequence Descriptions

Accident Identifier: CL3-1

(See Table 4.1-1) The initial failure (initiating event) is an operator error, no liquid nitrogen in the Dewar cold trap of the sub-sampling System in the chemical laboratory which results in a cold trap temperature above the UF_6 desublimination temperature. During evacuation of the sub-sampling System in this condition, liquid UF_6 desublimes to gas and is pumped by the vacuum pump and is transferred to the CRDB GEVS with the potential for a criticality event. The transfer of UF_6 into the CRDB GEVS system must exist for a significant period of time to allow a sufficient amount of accumulation on the filters to form a critical mass. The combination of these conditions is assumed to lead to accumulation of fissile material on the CRDB GEVS filters resulting in a criticality event.

For the uncontrolled accident sequence, UF_6 (product) is discharged to the CRDB GEVS and is collected on the CRDB GEVS HEPA filters forming a critical mass of fissile material on the filter over a long period of time. A criticality event is assumed to result for this accident sequence. This event is assumed to have a high consequence to the worker and public.

For the controlled accident sequence, the preventive measures are (1) automatic isolation of cold trap on cold trap high temperature to ensure no more than a subcritical mass deposited on the CRDB GEVS filter (IROFS20) and (2) an automatic trip of the CRDB GEVS on ^{235}U selective high-high gamma to ensure no more than a subcritical mass deposited on the filter (IROFS21).

The frequency index number for the initiating event was determined to be (-2). The NUREG-1520 criteria – no failures of this type in this facility in 30 yrs – applies. This failure frequency index was selected based on evidence from history of similarly designed Urenco European plants, which have a combined plant history of greater than 30 yrs, and have not had a failure of this type.

A failure probability index of (-2) was selected for IROFS20. This corresponds to a single active engineered IROFS per NUREG-1520 criteria.

A failure probability index of (-2) was selected for IROFS21. This corresponds to a single active engineered IROFS per NUREG-1520 criteria.

Table 3.7-2 Accident Sequence Descriptions

Accident Identifier: CL3-2

(See Table 4.1-1) The initial failure (initiating event) is an operator error, no liquid nitrogen in the UF_6 cold trap which results in a cold trap temperature above the UF_6 desublimination temperature. During the process of transferring product samples for assay analysis, liquid UF_6 flashes to gas. This leads to a release of UF_6 to the atmosphere exposing the worker.

For the uncontrolled accident sequence, the release of liquid UF_6 (product) results in exposure of the worker. This event was calculated to result in a high consequence to the worker and low consequence to the public.

For the controlled accident sequence, the preventive measures are (1) the administrative establishment of airflow away from worker to ensure inhalation of uranic material and HF consequences are low during transfer of product samples for assay analysis (IROFS24b) and (2) the administrative verification that product samples are in a solid state, prior to transfer of product samples for assay analysis, to ensure worker consequences of inhalation of uranic material and HF are low (IROFS46). For these preventive measures, if the acceptance criteria are not met, then the transfer of product samples for assay analysis shall not be initiated.

The frequency index number for the initiating event was determined to be (-2). The NUREG-1520 criteria – no failures of this type in this facility in 30 yrs – applies. This failure frequency index was selected based on evidence from history of similarly designed Urenco European plants, which have a combined plant history of greater than 30 yrs, and have not had a failure of this type.

A failure probability index of (-2) was selected for IROFS24b. This corresponds to an administrative IROFS for routine planned operations per NUREG-1520 criteria.

The failure probability index of (-2) was selected for IROFS46. This corresponds to an administrative IROFS for routine planned operations per NUREG-1520 criteria.

Table 3.7-2 Accident Sequence Descriptions

Accident Identifier: CL3-3

(See Table 4.1-1) The initial failure (initiating event) is the UF_6 sub-sampling unit heater controller failure, causing the heater within the UF_6 sub-sampling unit to remain on.

For the uncontrolled accident sequence, the sample bottle over heats and the bottle hydraulically ruptures due to the expansion of the UF_6. Upon bottle rupture, the sample bottle content of UF_6 is released within chemical laboratory hood. HF and uranic material are released to the chemical laboratory exposing workers. This event is calculated to result in a low consequence to the public and a high consequence to the worker.

For the controlled accident sequence, the preventive measures are (1) automatic trip of UF_6 sub-sampling unit hotbox heater or high hotbox internal temperature to ensure sample bottle integrity (IROFS43) and (2) administrative establishment of air flow away from the worker to ensure inhalation of uranic material and HF consequences are low during heating of a sample bottle(s) within the UF_6 sub-sampling unit (IROFS24b). If air flow from the worker is not established, then sample bottle(s) in the UF_6 sampling unit shall not be heated.

The frequency index number for the initiating event was determined to be (-2). The NUREG-1520 criteria – no failures of this type in this facility in 30 yrs – applies. This failure frequency index was selected based on evidence from history of similarly designed Urenco European plants, which have a combined plant history of greater than 30 yrs, and have not had a failure of this type.

The failure probability index number for IROFS43 was determined to be (-2), a single active engineered IROFS per NUREG-1520.

A failure probability index of (-2) was selected for IROFS24b. This corresponds to an administrative IROFS for routine planned operations per NUREG-1520 criteria.

Table 3.7-2 Accident Sequence Descriptions

Accident Identifier: CP1-2

The initial failure (initiating event) is that a product cylinder arrives at the plant with excess moderator inside the cylinder. This failure results in the potential for a criticality event.

The combination of conditions, that needs to be fulfilled to result in a potential criticality event due to moderator being present in a cylinder include the following:

(1) During vacuum testing of the cylinder, after connection to the plant, the operator must fail to recognize the increased pressure in the cylinder due to the presence of moderator in the cylinder is within acceptable limits, and

(2) Visual inspection has failed to detect the presence of oil in the cylinder.

For the uncontrolled accident sequence, failures (1) or (2) occur (IROFS16a: administratively limit moderator mass (oil and water) in cylinders containing enriched uranic material to ensure sub criticality). A criticality event is assumed to result for this accident sequence when the cylinder is connected to the plant. This event is assumed to result in a high consequence to the worker and public.

For the controlled sequence, the preventive measure is administratively limit moderator mass (oil and water) in cylinders containing enriched uranic material to ensure sub criticality by allowing no visible oil and by limiting cylinder vapor pressure prior to introducing product (IROFS16a). If the acceptance criteria is not met, then product shall not be introduced into the associated cylinder.

The frequency index number for the initiating event was determined to be (-2). The NUREG-1520 criteria – no failures of this type in this facility in 30 yrs – applies. This failure frequency index was selected based on evidence from history of similarly designed Urenco European plants, which have a combined plant history of greater than 30 yrs, and have not had a failure of this type.

The failure probability index number of (-3) was selected for IROFS16a. This frequency probability index number corresponds to an enhanced administrative IROFS per NUREG-1520. IROFS16a is enhanced by requiring independent verification of the IROFS safety function. The IROFS justification for enhanced administrative control is discussed in Section 3.8.3.

Accident Identifier: SW1-1

(See Table 4.1-1) This accident sequence is identical to sequence FR1-1.

Accident Identifier: SW1-2

(See Table 4.1-1) This accident sequence is identical to sequence FR1-2.

Table 3.7-2 Accident Sequence Descriptions

Accident Identifier: LW1-1

(See Table 4.1-1) The initial failure (initiating event) is the accumulation of sufficient uranium mass in the degreaser water collection tank.

The initial condition that needs to be fulfilled to result in a criticality event in the degreaser water collection tank is that the operator would have to fail to control the uranium mass in the tank, including the operator failing to notice the incremental rise in uranium concentration from the sampling of the tank (failure of IROFS19c, administratively limit the measured uranic mass inventory to ensure a subcritical mass by performing independent sampling and measurement).

For the uncontrolled accident sequence, sufficient uranium mass accumulates in the degreaser tank to cause criticality. A criticality event is assumed to result for this accident sequence. A criticality event is assumed to result in a high consequence to the worker and public.

For the controlled accident sequence, the preventive measures are (1) administratively limit the calculated tank uranic mass inventory to ensure a subcritical mass (IROFS19a, i.e., using bookkeeping procedures to determine calculated tank uranic mass inventory prior to transfer of enriched uranic material to the associated tank) and (2) administratively limit the measured tank uranic inventory to ensure a subcritical mass (IROFS19d, i.e., by independent sampling and measurement to determine tank uranic mass inventory prior to transfer of enriched uranic material to the associated tank). For each preventive measure, if the acceptance criterion is not met, then transfer of enriched uranic material shall not be initiated.

The frequency index number for the initiating event, failure of IROFS19c, was determined to be (-1). This is based on failure of a redundant IROFS per NUREG-1520.

A failure probability index of (-2) was selected for IROFS19a. This corresponds to an administrative IROFS for routine planned operation per NUREG-1520.

A failure probability index of (-2) was selected for IROFS19d. This corresponds to an administrative IROFS for routine planned operation per NUREG-1520.

Accident Identifier: LW1-2

(See Table 4.1-1) This accident sequence is identical to sequence FR1-1.

Accident Identifier: LW1-3

(See Table 4.1-1) This accident sequence is identical to sequence FR1-2.

Table 3.7-2 Accident Sequence Descriptions

Accident Identifier: LW2-1

(See Table 4.1-1) The initial failure (initiating event) is the accumulation of sufficient uranium mass in the spent citric acid tank to cause criticality.

The initial condition that needs to be fulfilled to result in a criticality event in the spent citric acid tank is that the operator would have to fail to control the uranium mass in the tank, including the operator failing to notice the incremental rise in uranium concentration from the sampling of the tank (failure of IROFS19c, administratively limit the measured uranic mass inventory to ensure a subcritical mass by performing independent sampling and measurement).

For the uncontrolled accident sequence, sufficient uranium mass accumulates in the spent citric acid tank. A criticality event is assumed to result in a high consequence to the worker and public.

For the controlled accident sequence, the preventive measures are (1) administratively limit the calculated tank uranic mass inventory to ensure a subcritical mass (IROFS19a, i.e., using bookkeeping procedures to determine calculated tank uranic mass inventory prior to transfer of enriched uranic material to the associated tank) and (2) administratively limit the measured tank uranic inventory to ensure a subcritical mass (IROFS19d, i.e., by independent sampling and measurement to determine tank uranic mass inventory prior to transfer of enriched uranic material to the associated tank). For each preventive measure, if the acceptance criterion is not met, then transfer of enriched uranic material shall not be initiated.

The frequency index number for the initiating event, failure of IROFS19c was determined to be (-1). This is based on failure of a redundant IROFS per NUREG-1520.

A failure probability index of (-2) was selected for IROFS19a. This corresponds to an administrative IROFS for routine planned operation per NUREG-1520.

A failure probability index of (-2) was selected for IROFS19d. This corresponds to an administrative IROFS for routine planned operation per NUREG-1520.

Table 3.7-2 Accident Sequence Descriptions

Accident Identifier: LW3-1

(See Table 4.1-1) The initial failure (initiating event) is the accumulation of sufficient uranium mass in the miscellaneous effluent collection tank to cause criticality.

The initial condition that needs to be fulfilled to result in a criticality event in the miscellaneous effluent collection tank is that the operator would have to fail to control the uranium mass in the tank, including the operator failing to notice the incremental rise in uranium concentration from the sampling of the tank (failure of IROFS19c, administratively limit the measured uranic mass inventory to ensure a subcritical mass by performing independent sampling and measurement).

For the uncontrolled accident sequence, sufficient uranium mass accumulates in the miscellaneous effluent collection tank. A criticality event is assumed to result for this accident sequence. A criticality event is assumed to result in a high consequence to the worker and public.

For the controlled accident sequence, the preventive measures are (1) administratively limit the calculated tank uranic mass inventory to ensure a subcritical mass (IROFS19a, i.e., using bookkeeping procedures to determine calculated tank uranic mass inventory prior to transfer of enriched uranic material to the associated tank) and (2) administratively limit the measured tank uranic inventory to ensure a subcritical mass (IROFS19d, i.e., by independent sampling and measurement to determine tank uranic mass inventory prior to transfer of enriched uranic material to the associated tank). For each preventive measure, if the acceptance criterion is not met, then transfer of enriched uranic material shall not be initiated.

The frequency index number for the initiating event, failure of IROFS19c, was determined to be (-1). This is based on failure of a redundant IROFS per NUREG-1520.

A failure probability index of (-2) was selected for IROFS19a. This corresponds to an administrative IROFS for routine planned operation per NUREG-1520.

A failure probability index of (-2) was selected for IROFS19d. This corresponds to an administrative IROFS for routine planned operation per NUREG-1520.

Table 3.7-2 Accident Sequence Descriptions

Accident Identifier: LW5-1

(See Table 4.1-1) The initial failure (initiating event) is the accumulation of sufficient uranium mass in the precipitation treatment tank to cause criticality.

The initial condition that needs to be fulfilled to result in a criticality event in the precipitation treatment tank is that the operator would have to fail to control the uranium mass in the tank, including the operator failing to notice the incremental rise in uranium concentration from the sampling of the tank (failure of IROFS19c, administratively limit the measured uranic mass inventory to ensure a subcritical mass by performing independent sampling and measurement).

For the uncontrolled accident sequence, sufficient uranium mass accumulates in the precipitation treatment tank. A criticality event is assumed to result for this accident sequence. A criticality event is assumed to result in a high consequence to the worker and public.

For the controlled accident sequence, the preventive measures are (1) administratively limit the calculated tank uranic mass inventory to ensure a subcritical mass (IROFS19a, i.e., using bookkeeping procedures to determine calculated tank uranic mass inventory prior to transfer of enriched uranic material to the associated tank) and (2) administratively limit the measured tank uranic inventory to ensure a subcritical mass (IROFS19d, i.e., by independent sampling and measurement to determine tank uranic mass inventory prior to transfer of enriched uranic material to the associated tank). For each preventive measure, if the acceptance criterion is not met, then transfer of enriched uranic material shall not be initiated.

The frequency index number for the initiating event, failure of IROFS19c was determined to be (-1). This is based on failure of a redundant IROFS per NUREG-1520.

A failure probability index of (-2) was selected for IROFS19a. This corresponds to an administrative IROFS for routine planned operation per NUREG-1520.

A failure probability index of (-2) was selected for IROFS19d. This corresponds to an administrative IROFS for routine planned operation per NUREG-1520.

Table 3.7-2 Accident Sequence Descriptions

Accident Identifier: RD1-1

(See Table 4.1-1) The initiating event allows the placement of product 30B cylinders into a non-safe criticality interaction arrangement (i.e., a non-analyzed condition). The initial condition is an operator would have stacked a product cylinder on another product cylinder in the CRDB

For the uncontrolled accident sequence, product cylinders are stacked more than one high next to another product cylinder. A criticality event is assumed to result for this accident sequence. This event is assumed to result in a high consequence to the worker and public.

For the controlled accident sequence, the preventive measure is (IROFS45) to ensure subcritical geometry, prior to moving a cylinder containing enriched uranium in the CRDB or the Blending and Liquid Sampling Area, verify that the stored cylinders containing enriched uranium in these areas are in a horizontal, co-planar (i.e., non-stacked), condition and that no other cylinder containing enriched uranium is in movement in the associated area. If the acceptance criteria are not met, then the cylinder containing enriched uranium shall not be moved.

The frequency index number for the initiating event was determined to be (-2). The NUREG-1520 criteria – no failures of this type in this facility in 30 yrs – applies. This failure frequency index was selected based on evidence from history of similarly designed Urenco European plants, which have a combined plant history of greater than 30 yrs, and have not had a failure of this type.

A failure probability index of (-3) was selected for IROFS45. This corresponds to an enhanced administrative IROFS for routine operation per NUREG 1520. IROFS45 is enhanced by requiring independent verification of the IROFS safety function. The IROFS justification for enhanced administrative control is discussed in Section 3.8.3.

Table 3.7-2 Accident Sequence Descriptions

Accident Identifier: EC3-1

The initial failure (initiating event) is failure of criticality enrichment control by failing to properly control the UF_6 enrichment process. The maximum enrichment of a single cascade is limited by mechanical enrichment control devices. This failure is initiated by the improper setting of the cascade enrichment control devices. In addition, other failures are assumed to occur such as (1) a leak must exist within the product system to cause breakdown build-up in an otherwise safe by geometry component, or allow moderator into the product cylinder and (2) a significant period of time is required to allow a significant build-up of product, breakdown and/or moderator. The combination of these conditions is assumed to result in a criticality event.

For the uncontrolled accident sequence there is a failure of criticality enrichment control by failing to properly control the UF_6 enrichment process. A criticality event is assumed to result for this accident sequence. A criticality event is assumed to result in a high consequence to the worker and public.

For the controlled accident sequence, the preventive measure is to perform the cascade process mass balance on a periodic basis to ensure subcriticality, in accordance with the nuclear criticality safety analysis (IROFSC22). If the acceptance criterion is not met then feed flow into all cascades of the associated assay shall be isolated such that no additional enrichment can occur.

The frequency index number for the initiating event was determined to be (-2). The NUREG-1520 criteria – no failures of this type in this facility in 30 yrs – applies. This failure frequency index was selected based on evidence from history of similarly designed Urenco European plants, which have a combined plant history of greater than 30 yrs, and have not had a failure of this type.

A failure probability index of (-3) was selected for IROFSC22. This corresponds to an enhanced administrative IROFS per NUREG-1520. IROFSC22 is enhanced by requiring independent verification of the IROFS safety function. This IROFS justification for enhanced administrative control is discussed in Section 3.8.3.

Table 3.7-2 Accident Sequence Descriptions

Accident Identifier: EC4-1

The initial failure (initiating event) is an operator error that results in an incorrect sampling sequence. This causes excessive flow of UF_6 resulting in the cascade sampling rig carbon trap becoming saturated.

For the uncontrolled accident sequence, a UF_6 plug forms on the discharge line of the vacuum pump, causing high pressure in the vacuum pump and thus failing seals leading to a release of UF_6 to the process services corridor. Although the consequences for this event have been calculated as a low category (1) due to the restricted flow inherent in the rig design, this event is assumed to result in a high consequence to the worker and the public. A welded in piece of piping on the suction of the vacuum pump is designed into the cascade sampling rig. This piping ensures that the system design contains the flow restriction necessary to maintain the consequences below the regulatory thresholds or to remain low (1). This welded in piece of piping in the rig design is maintained as IROFSC21.

For the controlled accident sequence, themitigative measure is a flow restriction to ensure, in the event of a postulated release, worker consequences of inhalation of uranic material and HF remain low (IROFSC21). As a result of IROFSC21, the consequence analysis shows that the consequences have been mitigated to a low category (1).

The frequency index number for the initiating event was determined to be (-2). The NUREG-1520 criteria – no failures of this type in this facility in 30 yrs – applies. This failure frequency index was selected based on evidence from history of similarly designed Urenco European plants, which have a combined plant history of greater than 30 yrs, and have not had a failure of this type.

A failure probability index of (-3) was selected for IROFSC21. This corresponds to a single passive engineered IROFS per NUREG-1520 criteria.

Accident Identifier: TP8-1

The initial failure (initiating event) is a Centrifuge Test Facility UF_6 vessel heater controller failure, causing a vessel high temperature.

For the uncontrolled accident sequence, the UF_6 test vessel overheats and the vessel hydraulically ruptures due to the expansion of UF_6. Upon vessel rupture, the UF_6 content is released into the Centrifuge Test Facility. This sequence, if uncontrolled, would require significant time to cause a UF_6 release since the heat up rate is limited by the heater capacity. In addition, failure of a single heating circuit is not sufficient to cause the temperatures required for a hydraulic rupture. This event is assumed to have a high consequence to the worker.

For the controlled accident sequence, the preventive measures are (1) automatic trip of the centrifuge Test Facility Feed/take-off vessel Huber Unistat 815 heater unit on high temperature to ensure feed/take-off vessel integrity (IROFSC15) and (2) automatic trip of the Centrifuge Test Facility Feed/take-off vessel Huber Unistat 815 heater unit on high temperature to ensure feed/take-off vessel integrity (IROFSC16).

The frequency index number for the initiating event was determined to be (-2). The NUREG-1520 criteria – no failures of this type in this facility in 30 yrs – applies. This failure frequency index was selected based on evidence from history of similarly designed Urenco European plants, which have a combined plant history of greater than 30 yrs, and have not had a failure of this type.

A failure probability index of (-2) was selected for IROFSC15. This corresponds to a single active engineered IROFS per NUREG-1520.

A failure probability index of (-2) was selected for IROFSC16. This corresponds to a single active engineered IROSF per NUREG-1520.

Table 3.7-2 Accident Sequence Descriptions

Accident Identifier: TP8-2

The initial failure (initiating event) is the Centrifuge Test Facility vent carbon trap becomes saturated with UF_6 caused by operator mis-alignment of the vacuum pump to the feed vessel.

For the uncontrolled accident sequence, a UF_6 passes through to plug the discharge side of the vacuum pump, but in insufficient quantities to form a blockage. This event has been calculated to result in a low consequence to workers and members of the public.

Accident Identifier: CHEM RELEASE-WORKER EVAC

The initial failure is a release of UF_6 of a magnitude that would require worker evacuation. The systems involved in the associated accident sequences that may lead to this magnitude of release are as follows.

> Tails, Feed, Feed Purification, Product, Blending and Sampling, Ventilated Room, UF_6 Sub-sampling Unit, UBC Storage Pad, Decontamination Workshop, and CRDB.

The uncontrolled event is a release of a magnitude that results in worker consequences of inhalation of uranic material and HF that are greater than a low category (1). The subsequent release from this event is assumed to have high consequences to the worker present in the area.

For the controlled event, the mitigative measure is to administratively limit exposure by requiring worker action to evacuate the area(s) of concern during a chemical release to ensure that the consequences of inhalation of uranic material and HF are low (IROFS39c). Sufficient time is available for the worker to detect and to evacuate the area(s) of concern. The resulting risk index is (3), which is acceptable risk.

The frequency index number for each initiating event of the associated accident sequences was determined to be (-2). The NUREG-1520 criteria – no failures of this type in this facility in 30 yrs – applies. This failure frequency index was selected based on evidence from history of similarly designed Urenco European plants, which have a combined plant history of greater than 30 yrs, and have not had a failure of this type.

The failure probability index for the administrative controls/procedures of IROFS39c was determined to be (-3). This corresponds to an administrative IROFS that must be performed in response to a rare unplanned demand per NUREG-1520. The IROFS justification for enhanced administrative control is discussed in Section 3.8.3.

Table 3.7-2 Accident Sequence Descriptions

Accident Identifier: CHEM RELEASE-WORKER EVAC – CAB

The initial failure is a release of UF_6 of a magnitude that would require worker evacuation. The systems involved in the associated accident sequences that may lead to this magnitude of release are as follows.

Centrifuge Assembly Building (CAB), Centrifuge Test Facility (CTF), Post-Mortem Facility (PMF)

The uncontrolled event is a release of a magnitude that results in worker consequences on inhalation of uranic material and HF that are greater than a low category (1). Although consequences in the Centrifuge Assembly Building CTF/PMF areas (except TP8-1) have been calculated as a low category (1), for risk reduction, the subsequent release from this event is assumed to have intermediate consequences to the worker present in the area. Refer to TP8-1 for discussion on consequences and IROFS for the TP8-1 accident sequence.

For the controlled event, the mitigative measure is to administratively limit exposure by requiring worker action to evacuate the area(s) of concern during a chemical release to ensure that the consequences of inhalation of uranic material and HF are low (IROFS39c). Sufficient time is available for the worker to detect and to evacuate the area(s) of concern. As a result of the success of IROFS39c, the accident analysis shows the risk index is at an acceptable level.

The frequency index number for each initiating event of the associated accident sequences was determined to be (-2). The NUREG-1520 criteria – no failures of this type in this facility in 30 yrs – applies. This failure frequency index was selected based on evidence from history of similarly designed Urenco European plants, which have a combined plant history of greater than 30 yrs, and have not had a failure of this type.

The failure probability index for the administrative controls/procedures of IROFS39c was determined to be (-2). This corresponds to an administrative IROFS that must be performed in response to a rare unplanned demand per NUREG-1520.

Table 3.7-3 External Events and Fire Accident Sequences and Risk Index

Accident Identifier	Initiating Event Index	Preventive Safety Parameter 1 or IROFS 1 Failure Index	Preventive Safety Parameter 2 or IROFS 2 Failure Index	Mitigation IROFS Failure Index	Likelihood Index T Uncontrolled (U) / Controlled (C)	Likelihood Category	Conseq. Category (Type of Accident)	Risk Index (h=f x g) Uncontrolled (U) / Controlled (C)	Comments and Recommendations
	(a)	(b)	(c)	(d)	(e)	(f)	(g)	(h)	
EE-Aircraft	-6	N/A	N/A	N/A	N/A	N/A	N/A	N/A	Not Credible Event
EE-Pipeline	-5	N/A	N/A	N/A	-5 (U)	1	3 (T)	3 (U)	Acceptable Risk
EE-Highway	-5	N/A	N/A	N/A	-5 (U)	1	3 (T)	3 (U)	Acceptable Risk
EE-Other Nearby Facilities	-6	N/A	N/A	N/A	N/A	N/A	N/A	N/A	Not Credible Event
EE-Railroad	-6	N/A	N/A	N/A	N/A	N/A	N/A	N/A	Not Credible Event
EE-Flood	-6	N/A	N/A	N/A	N/A	N/A	N/A	N/A	Not Credible Event
EE-LP-CRDB Bunker (T)	-2	N/A	N/A	N/A	-2 (U)	3	3 (T)	9 (U)	IROFS Required
EE-LP-CRDB Bunker(T)	2	IROFS27c -3	N/A	N/A	5 (C)	1	3 (T)	3 (C)	Acceptable Risk
EE-LP-CRDB Bunker (CR)	-2	N/A	N/A	N/A	-2 (U)	3	3 (CR)	9 (U)	IROFS Required
EE-LP-CRDB Bunker (CR)	2	IROFS27a -3	IROFS27b -3	N/A	8 (C)	1	3 (CR)	3 (C)	Acceptable Risk
EE-LP-SBM-CRDB Shell (T)	-2	N/A	N/A	N/A	-2 (U)	3	3 (T)	9 (U)	IROFS Required
EE-LP-SBM-CRDB Shell (T)	-2	IROFS27e -3	N/A	N/A	-5 (C)	1	3 (T)	3 (C)	Acceptable Risk
EE-Snow-CRDB Bunker (T)	-2	N/A	N/A	N/A	-2 (U)	3	3 (T)	9 (U)	IROFS Required

Table 3.7-3 External Events and Fire Accident Sequences and Risk Index

Accident Identifier	Initiating Event Index	Preventive Safety Parameter 1 or IROFS 1 Failure Index	Preventive Safety Parameter 2 or IROFS 2 Failure Index	Mitigation IROFS Failure Index	Likelihood Index T Uncontrolled (U) / Controlled (C)	Likelihood Category	Conseq. Category (Type of Accident)	Risk Index (h=f x g) Uncontrolled (U) / Controlled (C)	Comments and Recommendations
	(a)	(b)	(c)	(d)	(e)	(f)	(g)	(h)	
EE-Snow-CRDB Bunker (T)	-2	IROFS27c -3	N/A	N/A	-5 (C)	1	3 (T)	3 (C)	Acceptable Risk
EE-SNOW-SBM-CRDB Shell (T)	-2	N/A	N/A	N/A	-2 (U)	3	3 (T)	9 (U)	IROFS Required
EE-SNOW-SBM-CRDB Shell (T)	-2	IROFS27e -3	N/A	N/A	-5 (C)	1	3 (T)	3 (C)	Acceptable Risk
EE-Tornado, Tornado Missile & High Wind-CRDB Bunker (T)	-2	N/A	N/A	N/A	-2 (U)	3	3 (T)	9 (U)	IROFS Required
EE-Tornado, Tornado Missile & High Wind-CRDB Bunker (T)	-2	IROFS27c -3	N/A	N/A	-5 (C)	1	3 (T)	3 (C)	Acceptable Risk
EE-TORNADO& HIGH WIND-SBM-CRDB Shell (T)	-2	N/A	N/A	N/A	-2 (U)	3	3 (T)	9 (U)	IROFS Required
EE-TORNADO & HIGH WIND-SBM-CRDB Shell (T)	-2	IROFS27e -3	N/A	N/A	-5 (C)	1	3 (T)	3 (C)	Acceptable Risk

Table 3.7-3 External Events and Fire Accident Sequences and Risk Index

Accident Identifier	Initiating Event Index	Preventive Safety Parameter 1 or IROFS 1 Failure Index	Preventive Safety Parameter 2 or IROFS 2 Failure Index	Mitigation IROFS Failure Index	Likelihood Index T Uncontrolled (U) / Controlled (C)	Likelihood Category	Conseq. Category (Type of Accident)	Risk Index (h=f x g) Uncontrolled (U) / Controlled (C)	Comments and Recommendations
	(a)	(b)	(c)	(d)	(e)	(f)	(g)	(h)	
EE-TORNADO MISSLE-SBM-CRDB SHELL & BUNKER WORKER	-2	N/A	N/A	N/A	-2 (U)	3	3 (T)	9 (C)	IROFS Required
EE-TORNADO MISSILE-SBM-CRDB SHELL & BUNKER WORKER	-2	N/A	N/A	IROFS39d (Success)	-2 (C)	3	1 (T)	3 (C)	Acceptable Risk
EE-TORNADO MISSILE-SBM-CRDB SHELL & BUNKER WORKER	-2	N/A	N/A	IROFS39d (Failure, -3)	-5 (C)	1	3 (T)	3 (C)	Acceptable Risk
EE-TORNADO MISSILE-SBM-PUBLIC	-2	N/A	N/A	N/A	-2 (U)	3	2 (T)	6 (U)	IROFS Required
EE-TORNADO MISSILE-SBM-PUBLIC	-2	N/A	N/A	IROFS28 (Success)	-2 (C)	3	1 (T)	3 (C)	Acceptable Risk

Table 3.7-3 External Events and Fire Accident Sequences and Risk Index

Accident Identifier	Initiating Event Index	Preventive Safety Parameter 1 or IROFS 1 Failure Index	Preventive Safety Parameter 2 or IROFS 2 Failure Index	Mitigation IROFS Failure Index	Likelihood Index T Uncontrolled (U) / Controlled (C)	Likelihood Category	Conseq. Category (Type of Accident)	Risk Index (h=f x g) Uncontrolled (U) / Controlled (C)	Comments and Recommendations
	(a)	(b)	(c)	(d)	(e)	(f)	(g)	(h)	
EE-TORNADO MISSILE-SBM-PUBLIC	-2	N/A	N?A	IROFS28 (Failure, -3)	-5 (C)	1	2 (T)	2 (C)	Acceptable Risk
EE-SEISMIC-CRDB SHELL (T)	-2	N/A	N/A	N/A	-2(U)	3	3 (T)	9 (U)	IROFS Required
EE-SEISMIC-CRDB SHELL (T)	-2	IROFS27e -3	N/A	N/A	-5 (C)	1	3 (T)	3 (C)	Acceptable Risk
EE-SEISMIC-CRDB BUNKER (T)	-2	N/A	N/A	N/A	-2 (U)	3	3 (T)	9 (U)	IROFS Required
EE-SEISMIC-CRDB BUNKER (T)	-2	IROFS27c -3	N/A	N/A	-5 (C)	1	3 (T)	3 (T)	Acceptable Risk
EE-SEISMIC-SBM	-2	N/A	N/A	N/A	-2 (U)	3	3 (T)	9 (U)	IROFS Required
EE-SEISMIC-SBM	-2	N/A	N/A	IROFS27e (Failure, -3)	-5 (C)	1	3 (T)	3 (C)	Acceptable Risk
EE-SEISMIC - SBM	-2	N/A	N/A	IROFS27e (Success)	-2 (C)	3	3 (T)	9 (C)	Additional IROFS Required

Table 3.7-3 External Events and Fire Accident Sequences and Risk Index

Accident Identifier	Initiating Event Index	Preventive Safety Parameter 1 or IROFS 1 Failure Index	Preventive Safety Parameter 2 or IROFS 2 Failure Index	Mitigation IROFS Failure Index	Likelihood Index T Uncontrolled (U) / Controlled (C)	Likelihood Category	Conseq. Category (Type of Accident)	Risk Index (h=f x g) Uncontrolled (U) / Controlled (C)	Comments and Recommendations
	(a)	(b)	(c)	(d)	(e)	(f)	(g)	(h)	
EE-SEISMIC-SBM	-2	N/A	N/A	IRFOS27e IROFS28 (Success)	-2 (C)	3	3 (T)	9 (C)	Additional IROFS Required
EE-SEISMIC-SBM	-2	N/A	N/A	IROFS27e IROFS28 (Failure,-3)	-5 (C)	1	3 (T)	3 (C)	Acceptable Risk
EE-SEISMIC-SBM	-2	N/A	N/A	IROFS27e IROFS41 (Success)	-2 (C)	3	3 (T)	9 (C)	Additional IROFS Required
EE-SEISMIC-SBM	-2	N/A	N/A	IROFS27e IROFS41 (Failure, -3)	-5 (C)	1	3 (T)	3 (C)	Acceptable Risk
EE-SEISMIC-SBM	-2	N/A	N/A	IROFS27e IROFS41 IROFS28 (Success)	-2 (C)	3	1 (T)	3 (C)	Acceptable Risk
EE-SEISMIC-SBM	-2	N/A	N/A	IROFS27e IROFS41 IROFS28 (Failure, -3)	-5 (C)	1	3 (T)	3 (C)	Acceptable Risk
EE-SEISMIC - WORKER EVAC - CAB	-2	N/A	N/A	N/A	-2 (U)	3	2 (T)	6 (U)	IROFS Required
EE SEISMIC - WORKER EVAC - CAB	-2	N/A	N/A	IROFS39a -2	-4 (C)	2	2 (T)	4 (C)	Acceptable Risk

Table 3.7-3 External Events and Fire Accident Sequences and Risk Index

Accident Identifier	Initiating Event Index	Preventive Safety Parameter 1 or IROFS 1 Failure Index	Preventive Safety Parameter 2 or IROFS 2 Failure Index	Mitigation IROFS Failure Index	Likelihood Index T Uncontrolled (U) / Controlled (C)	Likelihood Category	Conseq. Category (Type of Accident)	Risk Index (h=f x g) Uncontrolled (U) / Controlled (C)	Comments and Recommendations
	(a)	(b)	(c)	(d)	(e)	(f)	(g)	(h)	
EE-SEISMIC-WORKER EVAC	-2	N/A	N/A	N/A	-2 (U)	3	3 (T)	9 (U)	IROFS Required
EE-SEISMIC-WORKER EVAC	-2	N/A	N/A	IROFS39a -3	-5 (C)	1	3 (T)	3 (C)	Acceptable Risk
FF6-1	-2	N/A	N/A	N/A	-2 (U)	3	3 (T)	9 (U)	IROFS Required
FF6-1	-2	IROFS35 -3	IROFS36a/36d -3	N/A	-8 (C)	1	3 (T)	3 (C)	Acceptable Risk
FF6-1	-2	IROFS35 -3	N/A	N/A	-5 (c)	1	3 (T)	3(C)	Acceptable Risk
FF6-1	-2	N/A	IROFS36a/36d -3	N/A	-5 (c)	1	3 (T)	3(C)	Acceptable Risk
FF6-2	-2	N/A	N/A	N/A	-2 (U)	3	3 (T)	9 (U)	IROFS Required
FF6-2	-2	IROFS36a -3	N/A	N/A	-5 (C)	1	3 (T)	3 (C)	Acceptable Risk
FF7-1	-2	N/A	N/A	N/A	-2 (U)	3	3 (T)	9 (U)	IROFS Required
FF7-1	-2	IROFS36c -3	N/A	N/A	-5 (C)	1	3 (T)	3 (C)	Acceptable Risk
FF15-1	-2	N/A	N/A	N/A	-2 (U)	3	3 (T)	9 (U)	IROFS Required
FF15-1	-2	IROFS35 -3	IROFS36a -3	N/A	-8 (C)	1	3 (T)	3 (C)	Acceptable Ris
FF15-1	-2	IROFS35 -3	N/A	N/A	-5 (C)	1	3 (T)	3(C)	Acceptable Risk
FF15-1	-2	N/A	IROFS36a -3	N/A	-5 (C)	1	3(T)	3(C)	Acceptable Risk
FF16-1	-2	N/A	N/A	N/A	-2 (U)	3	3 (T)	9 (U)	IROFS Required

Table 3.7-3 External Events and Fire Accident Sequences and Risk Index

Accident Identifier	Initiating Event Index	Preventive Safety Parameter 1 or IROFS 1 Failure Index	Preventive Safety Parameter 2 or IROFS 2 Failure Index	Mitigation IROFS Failure Index	Likelihood Index T Uncontrolled (U) / Controlled (C)	Likelihood Category	Conseq. Category (Type of Accident)	Risk Index (h=f x g) Uncontrolled (U) / Controlled (C)	Comments and Recommendations
	(a)	(b)	(c)	(d)	(e)	(f)	(g)	(h)	
FF16-1	-2	IROFS36a -3	N/A	N/A	-5 (C)	1	3 (T)	3 (C)	Acceptable Risk
FF16-2	-2	N/A	N/A	N/A	-2 (U)	3	3 (T)	9 (U)	IROFS Required
FF16-2	-2	IROFS36a -3	N/A	N/A	-5 (C)	1	3 (T)	3 (C)	Acceptable Ris
FF24-1	-2	N/A	N/A	N/A	-2 (U)	3	3 (T)	9 (U)	IROFS Required
FF24-1	-2	IROFS35 -3	IROFS36a/36d -3	N/A	-8 (C)	1	3 (T)	3 (C)	Acceptable Risk
FF24-1	-2	IROFS35 -3	N/A	N/A	-5 (C)	1	3 (T)	3(C)	Acceptable Risk
FF24-1	-2	N/A	IROFS36a/36d -3	N/A	-5 (C)	1	3(T)	3(C)	Acceptable Risk
FF25-1	-2	N/A	N/A	N/A	-2 (U)	3	3 (T)	9 (U)	IROFS Required
FF25-1	-2	IROFS36d -3	N/A	N/A	-5 (C)	1	3 (T)	3 (C)	Acceptable Risk
FF25-2	-2	N/A	N/A	N/A	-2 (U)	3	3 (T)	9 (U)	IROFS Required
FF25-2	-2	IROFS36d -3	N/A	N/A	-5 (C)	1	3 (T)	3 (C)	Acceptable Risk
FF42-1	-2	N/A	N/A	N/A	-2 (U)	3	3 (T)	9 (U)	IROFS Required
FF42-1	-2	IROFS36c -3	N/A	N/A	-5 (C)	1	3 (T)	3 (C)	Acceptable Risk
FF43-1	-2	N/A	N/A	N/A	-2 (U)	3	3 (T)	9 (U)	IROFS Required
FF43-1	-2	IROFS36e -3	N/A	N/A	-5 (C)	1	3 (T)	3 (C)	Acceptable Risk
FF43-2	-2	N/A	N/A	N/A	-2 (U)	3	3 (T)	9 (U)	IROFS Required
FF43-2	-2	IROFS36f -3	N/A	N/A	-5 (C)	1	3 (T)	3 (C)	Acceptable Risk
FF44-1	-2	N/A	N/A	N/A	-2 (U)	3	3 (T)	9 (U)	IROFS Required

Table 3.7-3 External Events and Fire Accident Sequences and Risk Index

Accident Identifier	Initiating Event Index	Preventive Safety Parameter 1 or IROFS 1 Failure Index	Preventive Safety Parameter 2 or IROFS 2 Failure Index	Mitigation IROFS Failure Index	Likelihood Index T Uncontrolled (U) / Controlled (C)	Likelihood Category	Conseq. Category (Type of Accident)	Risk Index (h=f x g) Uncontrolled (U) / Controlled (C)	Comments and Recommendations
	(a)	(b)	(c)	(d)	(e)	(f)	(g)	(h)	
FF44-1	-2	IROFS36g -3	N/A	N/A	-5 (C)	1	3 (T)	3 (C)	Acceptable Risk
FF-WORKER EVACa	-2	N/A	N/A	N/A	-2 (U)	3	3 (T)	9 (U)	IROFS Required
FF-WORKER EVACb	-2	IROFS36a/36d (Failure, -3)	N/A	N/A	-5 (C)	1	3 (T)	3 (C)	Acceptable Risk prior to worker evacuation
FF-WORKER EVACc	-2	IROFS36a/36d (Success)	N/A	IROFS39b (Success)	-2 (c)	3	1 (T)	3 (C)	Acceptable Risk with evacuation
FF-WORKERE VACd	-2	IROFS36a/36d (Success)	N/A	IROFS39b -2 (Failure)	-4 (C)	2	2 (T)	4 (C)	Acceptable Risk with evacuation
FF-WORKER EVACe	-2	IROFS36a/36d (Failure, -3)	N/A	IROFS39b -2 (Failure)	-7 (C)	1	3 (T)	3 (C)	Acceptable Risk with evacuation
FF-WORKER EVAC-CABa	-2	N/A	N/A	N/A	-2 (U)	3	3 (T)	9 (U)	IROFS Required
FF-WORKER EVAC-CABb	-2	N/A	N/A	IROFS36i (Success)	-2 (C)	3	2 (T)	6 (C)	Additional IROFS Required
FF-WORKER ECAB-CABc	-2	N/A	N/A	IROFS36i -3 (Failure)	-5 (C)	1	3 (T)	3 (C)	Acceptable Risk
FF-WORKER EVAC-CABd	-2	N/A	N/A	IROFS36i (Success) IROFS39b (Success)	-2 (C)	3	1 (T)	3 (C)	Acceptable Risk

Table 3.7-3 External Events and Fire Accident Sequences and Risk Index

Accident Identifier	Initiating Event Index	Preventive Safety Parameter 1 or IROFS 1 Failure Index	Preventive Safety Parameter 2 or IROFS 2 Failure Index	Mitigation IROFS Failure Index	Likelihood Index T Uncontrolled (U) / Controlled (C)	Likelihood Category	Conseq. Category (Type of Accident)	Risk Index (h=f x g) Uncontrolled (U) / Controlled (C)	Comments and Recommendations
	(a)	(b)	(c)	(d)	(e)	(f)	(g)	(h)	
FF-WORKER EVAC-CABe	-2	N/A	N/A	IROFS36i (Success) IROFS39b -2 (Failure)	-4 (C)	2	2 (T)	4 (C)	Acceptable Risk
EE-CHEM RELEASE-WORKER EVAC-CAB	-2	N/A	N/A	N/A	-2 (U)	3	3 (T)	9 (U)	IROFS Required
EE-CHEM RELEASE-WORKER EVAC-CAB	-2	N/A	N/A	IROFS39d -3	-5(C)	1	3 (T)	3(C)	Acceptable Risk
OC1-1	-1	N/A	N/A	N/A	-1(U)	3	3(T)	9(U)	IROFS Required
OC1-1	-1	IROFS50a -2	IROFS50h -2	N/A	-5(C)	1	3(T)	3(C)	Acceptable Risk
OC2-1	-1	N/A	N/A	N/A	-1(U)	3	3(T)	9(U)	IROFS Required
OC2-1	-1	IROFS50b -2	IROFS50c -2	N/A	-5(C)	1	3(T)	3(C)	Acceptable Risk
OC3-1	-1	N/A	N/A	N/A	-1(U)	3	2(T)	6(U)	IROFS Required
OC3-1	-1	IROFS50d -2	IROFS50e -1	N/A	-4(C)	2	2(T)	4(C)	Acceptable Risk
OC4-1	-1	N/A	N/A	N/A	-1(U)	3	3(T)	9(U)	IROFS Required
OC4-1	-1	IROFS50f -3	IROFS50g -1	N/A	-5(C)	1	3(T)	3(C)	Acceptable Risk

Table 3.7-4 External Events and Fire Accident Descriptions

Accident Identifier: EE-AIRCRAFT

Aircraft crash into facility from local airport traffic and commercial or military routes in the vicinity of the facility meets the definition of not credible. Based on detailed probabilistic analysis, the annual probability of an aircraft crash onto the site is less than 1.0E-6 (see Section 3.2.1.2.4). This yields an initiating event index of (-6). This probability meets definition of "not credible;" therefore, no IROFS are needed.

Accident Identifier: EE-PIPELINE

Oil industry pipelines located near the facility. Based on detailed probabilistic analyses, the hazards due to thermal radiation, missile generation and plant contamination by gas and/or explosion were shown to have an annual probability less than 1.0E-5 (see Section 3.2.2.4) and an initiating index of (-5) is appropriate. This meets the definition of "highly unlikely," therefore, no IROFS are needed. Consequence category conservatively assumed as high.

Accident Identifier: EE-HIGHWAY

Potential adverse impact to the facility from chemical releases or explosions from trucks on nearby highway was evaluated. Detailed probabilistic analyses show the annual probability of an explosion adversely impacting the plant is less than 1.0E-5 (see Section 3.2.1.2) and an initiating event index of (-5) is appropriate. This meets the definition of "highly unlikely," therefore, no IROFS are needed. Consequence category conservatively assumed as high.

Accident Identifier: EE-OTHER NEARBY FACILITIES

Potential adverse impact to the facility from chemical releases/explosions from nearby industrial or military facilities. No such facilities identified within proximity to enrichment plant. Therefore, an initiating event index of (-6) is appropriate which meets the definition of "not credible" and no IROFS are needed.

Accident Identifier: EE-RAILROAD

Potential adverse impact to the facility from chemical releases/explosions from nearby railroad traffic. Rail spur to the Waste Control Specialists facility along north side of NEF site does not transport explosive materials. No other railroads identified within proximity to the facility

(see Section 3.2.1.2.2). Therefore, an initiating event index of (-6) is appropriate which meets the definition of "not credible" and no IROFS are needed.

Accident Identifier: EE-FLOOD

No credible sources of river or upstream dam flooding exist at the site. This yields an initiating event index of (-6). This probability meets definition of "not credible," therefore, no IROFS are needed.

Table 3.7-4 External Events and Fire Accident Descriptions

Accident Identifier: EE-LP-CRDB BUNKER (T)

(See Table 4.1-2) Flooding due to local intense precipitation of areas containing UF_6 process systems and potential UF_6 release from process systems. This excludes the SBMs. Scenarios include: (1) excessive roof ponding beyond design capacity of roof and (2) interior building flooding from flood waters flowing and/or ponded around plant structures.

The initiating event is an uncontrolled flood with assumed high consequences to the worker and public. Without explicit design basis, conservatively assumed initiating event index of (-2) which would be typical of normal building code requirements.

For the controlled accident sequence, the preventive measure is a design feature of buildings containing UF_6 process systems for seismic, tornado, tornado missile, high wind, roof snow load, and roof ponding and site flooding due to local intense precipitation, to ensure UF_6 process systems integrity (IROFS27c)

The failure probability index of (-3) was selected for IROFS27c. This corresponds to a single passive engineered IROFS per NUREG-1520.

Accident Identifier: EE-LP-CRDB BUNKER (CR)

(See Table 4.1-2) Flooding due to local intense precipitation of areas containing enriched uranic material and a potential criticality event. This excludes the SBMs. Scenarios include:

(1) excessive roof ponding beyond design capacity of roof and (2) interior building flooding from flood waters flowing and/or ponded around plant structures.

The initiating event is an uncontrolled flood with assumed high consequences to the worker and public. Without explicit design basis, conservatively assumed initiating event index of (-2) which would be typical of normal building code requirements.

For the controlled accident sequence, the preventive measures are (1) a design feature of buildings containing enriched uranic material for roof ponding and site flooding due to local intense precipitation, to ensure associated building area sub criticality (IROFS27a) and (2) a design feature of buildings containing enriched uranic material for roof ponding and site flooding due to local intense precipitation, to ensure associated building area sub criticality (IROFS27b).

The design basis will demonstrate the highly unlikely frequency of the associated local intense precipitation (see Section 3.2.3.4.4).

The failure probability index of (-3) was selected for IROFS27a. This corresponds to a single passive engineered IROFS per NUREG-1520.

The failure probability index of (-3) was selected for IROFS27b. This corresponds to a single passive engineered IROFS per NUREG-1520.

Table 3.7-4 External Events and Fire Accident Descriptions

Accident Identifier: EE-LP-SBM-CRDB SHELL (T)

(See Table 4.1-2) Flooding due to local intense precipitation of areas containing UF_6 process systems and potential UF_6 release from process systems. Scenarios include: (1) excusive roof ponding beyond design capacity of roof and (2) interior building flooding from flood waters flowing and/or ponded around plant structures.

The initiating event is an uncontrolled flood with assumed high consequences to the worker and public. Without explicit design basis, conservatively assumed initiating event index (-2) which would be typical of normal building code requirements.

For the controlled accident sequence, the preventative measure is a design feature of buildings containing UF_6 process systems for seismic, tornado, high wind, roof snow load, and roof ponding and site flooding due to local intense precipitation, to ensure that a chemical release does not exceed the 10 CFR 70.61 performance requirements (IROFS27e).

The failure probability index of (-3) was selected for IROFS27e. This corresponds to a single passive engineered IROFS per NUREG-1520.

ccident Identifier: EE-SNOW-CRDB BUNKER (T)

(See Table 4.1-2) Excessive snow load on roofs of areas containing UF_6 process systems leading to roof failures and potential UF_6 release from process systems. This excludes the SBMs.

The uncontrolled event is an excessive snow load above normal building code design loads leading to roof failure and impacts on UF_6 process systems leading to UF_6 release. The event is assumed to have high consequences to the worker and public. Without explicit design basis, conservatively assumed initiating event index of (-2) which is appropriate for normal building code design.

For the controlled accident sequence, the preventive measure is a design feature of buildings containing UF_6 process systems for seismic, tornado, tornado missile, high wind, roof snow load, and roof ponding and site flooding due to local intense precipitation, to ensure UF_6 process systems integrity (IROFS27c).

The failure probability index of (-3) was selected for IROFS27c. This corresponds to a single passive engineered IROFS per NUREG-1520.

Accident Identifier: EE-SNOW-SBM-CRDB SHELL (T)

(See Table 4.1-2) Excessive snow load on SBM or CRDB superstructure or shell roof leading to roof failures and potential UF_6 release from process systems.

The uncontrolled event is an excessive snow load above normal building code design loads leading to roof failure and impacts on UF_6 process systems leading to UF_6 release. The event is assumed to have high consequences to the worker and public. Without explicit design basis, conservatively assumed initiating event index of (-2) which is appropriate for normal building code design.

For the controlled accident sequence, the preventative measure is a design feature of buildings containing UF_6 process systems for seismic, tornado, high wind, roof snow load, and roof ponding and site flooding due to local intense precipitation, to ensure that a chemical release does not exceed the 10 CFR 70.61 performance requirements (IROFS27e).

The failure probability index of (-3) was selected for IROFS27e. This corresponds to a single passive engineered IROFS per NUREG-1520.

Table 3.7-4 External Events and Fire Accident Descriptions

Accident Identifier: EE-TORNADO, TORNADO MISSILE & HIGH WIND- CRDB BUNKER (T)

(See Table 4.1-2) Excessive tornado, tornado missile and high wind loads leading to building failure at areas containing UF_6 process systems and potential UF_6 release from process systems. This excludes the SBMs.

The uncontrolled event is excessive tornado loads, tornado missile loads and high wind loads above normal building code design levels leading to building failure and impacts on UF_6 process systems leading to UF_6 release. The event is assumed to have high consequences to the worker and public. Without explicit design basis, conservatively assumed initiating event index of (-2) which is appropriate for normal building code design.

For the controlled event, buildings are designed to tornado, tornado missile and wind loads shown to be "highly unlikely." Details on the development of the tornado, tornado missile and high wind loads are provided in Section 3.2.3.4.1. The design basis for tornado, tornado missiles and high wind is IROFS27c.

The failure probability index of (-3) was selected for IROFS27c. This corresponds to a single passive engineered IROFS per NUREG-1520.

Accident Identifier: EE-TORNADO & HIGH WIND-SBM-CRDB SHELL (T)

(See Table 4.1-2) Excessive tornado and high wind loads leading to building failure of the SBMs or the CRDB shell and potential UF_6 release from process systems.

The uncontrolled event is excessive tornado loads and high wind loads above normal building code design levels leading to building failure and impacts on UF_6 process systems leading to UF_6 release. The event is assumed to have high consequences to the worker and public. Without explicit design basis, conservatively assumed initiating event index of (-2) which is appropriate for normal building code design.

For the controlled event, buildings are designed to tornado and wind loads shown to be "highly unlikely." The design basis for tornado and high wind is IROFS27e.

The failure probability index of (-3) was selected of IROFS27e. This corresponds to a single passive engineered IROFS per NUREF-1520.

Accident Identifier: EE-TORNADO MISSILE-SBM-CRDB SHELL & BUNKER WORKER

(See Table 4.1-2) Tornado missile penetration into the SBMs leading to potential UF_6 release from process systems.

The uncontrolled event is excessive tornado missile loads leading to failure and impacts on UF_6 process systems leading to UF_6 release. The event is assumed to have a high consequence to the worker. Without explicit design basis, conservatively assumed initiating event index of (-2) which is appropriate for UF_6 release.

For the controlled event, the mitigative measure is to implement IROFS39d which requires preemptive worker evacuation for tornados (initiators for tornado missiles). This mitigation reduces the consequence to workers to a low category.

The failure probability index of (-3) was selected for IROFS39d. This corresponds to an enhanced single administrative IROFS per NUREG-1520.

Table 3.7-4 External Events and Fire Accident Descriptions

Accident Identifier: EE-TORNADO MISSILE-SBM-PUBLIC

(See Table 4.1-2) Tornado missile penetration into the SBMs leading to failure at areas containing UF_6 process systems and potential UF_6 release from process systems. The uncontrolled event is excessive tornado missile loads leading to failure and impacts on UF_6 process systems leading to UF_6 release. The event is calculated to have intermediate consequences to the public. Without explicit design basis, conservatively assumed initiating event index of (-2) which is appropriate for UF_6 release.

For the controlled event, the mitigative measure is to limit the material at risk to releases only from the SBM areas outside the autoclaves by crediting IROFS28 that provides protection of the autoclaves against the tornado missile loads and containment of uranic material within the autoclaves (i.e. no release from the cylinders in the autoclaves). The mitigation reduces the consequence to the public to a low category.

The failure probability index of (-3) was selected for IROFS28. This corresponds to a single passive engineered IROFS per NUREG-1520.

Table 3.7-4 External Events and Fire Accident Descriptions

Accident Identifier: EE-SEISMIC-CRDB SHELL

(See Table 4.1-2) Excessive seismic motions imposed on the CRDB superstructure, beyond normal building code design, could lead to building collapse, breaching of UF_6 cylinders or damage to the Bunkered Area, and ultimately a UF_6 release.

For the uncontrolled sequence, the UF_6 cylinders do not have an explicit seismic design basis. An initiating event index of (-2) has been conservatively assumed. Information on the annual frequency of earthquakes is provided in Section 3.2.6.4. The peak horizontal ground acceleration at an annual frequency of 1E-02 is approximately 0.01g. The peak horizontal ground acceleration at an annual frequency of 1E-03 is approximately 0.05g. The seismic capacity of the UF_6 cylinders is assumed to be capable of maintaining UF_6 confinement to at least a 0.01g earthquake. Actual seismic capacity of the UF_6 cylinders is likely to be higher than 0.01g. Therefore, it is conservative to assign an initiating event index to cylinders of (-2).

The uncontrolled event is for the CRDB superstructure. The seismic event leads to building failure of the CRDB superstructure and impacts on UF_6 cylinders and the Bunkered Area leading to UF_6 release. The event is assumed to have high consequences.

For the controlled event, the CRDB superstructure is designed to a seismic level with an annual probability of 1.0E-4 (without collapse). Details of the development of the seismic design basis are provided in Section 3.2.6. The seismic design basis selected for the facility is based on a site-specific seismic hazard assessment for the NEF site.

The design basis earthquake (DBE) has been selected to bound the 10,000-yr (1.0E-4 mean annual probability) earthquake. This DBE will be used in the detailed design process to demonstrate compliance with the overall ISA performance requirements. This will be accomplished by confirmatory seismic performance calculations for the seismic IROFS during detailed design. The objective will be to demonstrate that use of this DBE will achieve a likelihood of unacceptable performance of less than approximately 1.0E-5 per year. The difference between the mean annual probabilities for design (1.0E-4) and performance (1.0E-5) is achieved through conservatism in the design (factors of safety), elasticity in the structures, and conservatism in the evaluation of the design.

Since the initiating event index for the UF_6 cylinders (-2) is more limiting than the seismic capacity of the buildings (-5), the (-2) is used as the initiating event index for all seismic cases.

For the controlled accident sequence the preventative measure and design feature of buildings containing UF_6 process systems for seismic, tornado, high wind, roof snow load, and roof ponding and site flooding due to local intense precipitation, to ensure that a chemical release does not exceed the 10 CFR 70.61 performance requirements (seismic portion, 1.0E-4 and likelihood of unacceptable performance 1.0E-5) is IROFS27e.

A failure probability index of (-3) was selected for IROFS27e. This corresponds to a single passive engineered IROFS per NUREG-1520.

Table 3.7-4 External Events and Fire Accident Descriptions

Accident Identifier: EE-SEISMIC-CRDB BUNKER

(See Table 4.1-2) Excessive seismic motions imposed on CRDB Bunkered Area, beyond normal building code design, could lead to building collapse, breaching of UF_6 cylinders or other uranic material storage containers, damage to systems and interior IROFS, and ultimately a UF_6 release.

For the uncontrolled sequence, the UF_6 cylinders and uranic material storage containers do not have an explicit seismic design basis. An initiating event index of (-2) has been conservatively assumed. Information on the annual frequency of earthquakes is provided in Section 3.2.6.4. The peak horizontal ground acceleration at an annual frequency of 1E-02 is approximately 0.01g. The peak horizontal ground acceleration at an annual frequency of 1E-03 is approximately 0.05g. The seismic capacity of the UF_6 cylinders is assumed to be capable of maintaining UF_6 confinement to at least a 0.01g earthquake. Actual seismic capacity of the UF_6 cylinders is likely to be higher than 0.01g. Therefore, it is conservative to assign an initiating event index to cylinders of (-2).

The uncontrolled event is for the CRDB Bunkered Area. The seismic event leads to building failure of the CRDB Bunkered Area and impacts on UF_6 cylinders or other uranic material storage containers and /or damage to systems, and ultimately a UF_6 release. The event is assumed to have high consequences.

For the controlled event, buildings are designed to a seismic level with an annual probability of 1.0E-4. Details of the development of the seismic design basis are provided in Section 3.2.6. The seismic design basis selected for the facility is based on a site-specific seismic hazard assessment for the NEF site.

The design basis earthquake (DBE) has been selected to bound the 10,000-yr (1.0E-4 mean annual probability) earthquake. This DBE will be used in the detailed design process to demonstrate compliance with the overall ISA performance requirements. This will be accomplished by confirmatory seismic performance calculations for the seismic IROFS during detailed design. The objective will be to demonstrate that use of this DBE will achieve a likelihood of unacceptable performance of less than approximately 1.0E-5 per year. The difference between the mean annual probabilities for design (1.0E-4) and performance (1.0E-5) is achieved through conservatism in the design (factors of safety), elasticity in the structures, and conservatism in the evaluation of the design.

Since the initiating event index for the UF_6 cylinders (-2) is more limiting than the seismic capacity of the buildings (-5), the (-2) is used as the initiating event index for all seismic cases.

For the controlled accident sequence the preventative measure and design feature of buildings containing UF_6 process systems for seismic, tornado, high wind, roof snow load, and roof ponding and site flooding due to local intense precipitation, to ensure that a chemical release does not exceed the 10 CFR 70.61 performance requirements (seismic portion, 1.0E-4 and likelihood of unacceptable performance 1.0E-5) is IROFS27c.

A failure probability index of (-3) was selected for IROFS27c. This corresponds to a single passive engineered IROFS per NUREG-1520.

Table 3.7-4 External Events and Fire Accident Descriptions

Accident Identifier: EE-SEISMIC-SBM

(See Table 4.1-2) Excessive seismic motions imposed on SBM, beyond normal building code design, and beyond the capacity of UF_6 piping and cascade systems could lead to building collapse, breaching of UF_6 systems and autoclaves, and ultimately a UF_6 release.

For the uncontrolled sequence, the UF_6 cascades, piping systems, and autoclaves do not have an explicit seismic design basis. An initiating event index of (-2) has been conservatively assumed. Information on the annual frequency of earthquakes is provided in Section 3.2.6.4. The peak horizontal ground acceleration at an annual frequency of 1E-02 is approximately 0.01g. The peak horizontal ground acceleration at an annual frequency of 1E-03 is approximately 0.05g. The seismic capacity of the UF_6 piping systems and autoclaves is assumed to be capable of maintaining UF_6 confinement to at least a 0.01g earthquake. Actual seismic capacity of the piping and autoclaves is likely to be higher than 0.01g. Therefore, it is conservative to assign an initiating event to UF_6 piping failure and autoclaves of (-2).

The uncontrolled event is for the SBM. The seismic event leads to building failure and impacts on centrifuges, piping, and autoclaves leading to UF_6 release. The event is assumed to have high consequences for both workers (including facility and site workers) and the public.

For the controlled event, buildings are designed to a seismic level with an annual probability of 1.0E-4. Details of the development of the seismic design basis are provided in Section 3.2.6. The seismic design basis selected for the facility is based on a site-specific seismic hazard assessment for the site.

The design basis earthquake (DBE) has been selected to bound the 10,000-yr (1.0E-4 mean annual probability) earthquake. This DBE will be used in the detailed design process to demonstrate compliance with the overall ISA performance requirements. This will be accomplished by confirmatory seismic performance calculations for the seismic IROFS during detailed design. This objective will be to demonstrate that use of this DBE will achieve a likelihood of unacceptable performance of less than approximately 1.0E-5 per year. The difference between the mean annual probabilities for design (1.0E-4) and performance (1.0E-5) is achieved through conservatism in the design (factors of safety), elasticity in the structures, and conservatism in the evaluation of the design.

Since the initiating event index for the UF_6 piping (-2) is more limiting than the seismic capacity of the buildings (-5), the (-2) is used as the initiating event index of all seismic cases.

Design feature of buildings containing UF_6 process systems for seismic, tornado, high wind, roof snow load, and roof ponding and site flooding due to local intense precipitation, to ensure that a chemical release does not exceed the 10 CFR 70.61 performance requirements (seismic portion, 1.0E-4 and likelihood of unacceptable performance 1.0E-5) is IROFS27e.

Add IROFS27e and evaluate. A failure probability index of (-3) was selected for IROFS27e. This corresponds to a single passive engineered IROFS per NUREG-1520. Consequence category is high (3). The resulting risk index is (3) which is acceptable risk. (IROFS27e applied)

Evaluate success of IROFS27e, initiating event index (-2) as described above. As a result of IROFS27e, the consequence analysis shows that the consequences remain high category (3) because of release from the cascades and autoclaves. The risk index is (9); therefore, additional IROFS are required. (IROFS27e applied)

Table 3.7-4 External Events and Fire Accident Descriptions

Accident Identifier: EE-SEISMIC-SBM (continued)

Add IROFS28, initiating event index (-2) as described above. As result of the addition of IROFS28 which limits the total seismic releases with the credit of the autoclave seismic qualification, the consequence analysis shows that the consequences remain high category (3) because of release from the cascades. The resulting risk index (9), therefore, additional IROFS are required. (IROFS27e and IROFS28 applied)

Evaluate failure of IROFS28. A failure probability index of (-3) was selected for IROFS28. This corresponds to a single passive engineered IROFS per NUREG-1520. Consequence category is high (3). The resulting risk index is (3) which is acceptable risk. (IROFS27e and IROFS28 applied)

Add IROFS41, initiating event index (-2) as described above. As a result of the addition of IROFS41 which limits the total seismic releases with the credit for qualified piping, consequence analysis shows that the consequences remain high category (3) because of release from the autoclaves. The resulting risk index is (9); therfore, additional IROFS are required. (IROFS27e and IROFS41 applied)

Evaluate failure of IROFS41. A failure probability index of (-3) was selected for IROFS41. This corresponds to a single passive engineered IROFS per NUREG-1520. . Consequence category is high (3). The resulting risk index is (3) which is acceptable risk. (IROFS27e and IROFS41 applied)

Add IROFS28, initiating event index (-2) as decribed above. As a result of the addition of IROFS28 which limits the total seismic releases with the credit of the autoclave seismic qualification, consequence anaylsis shows that the consequences have been mitigated to a low category (1) for both workers (including facility and site workers) and the public. The resulting risk index is (3), which is acceptable risk. (IROFS27e and IROFS41 and IROFS28 applied)

Evaluate failure of IROFS28. A failure probability index of (-3) was selected for IROFS28. This corresponds to a single passive engineered IROFS per NUREG-1520. Consequence category is high (3). The resulting risk index is (3) which is acceptable risk. (IROFS27e and IROFS41 and IROFS28 applied)

Table 3.7-4 External Events and Fire Accident Descriptions

Accident Identifier: EE-SEISMIC-WORKER EVAC

The initial failure (initiating event) is excessive seismic motions imposed beyond the capacity of UF_6 piping systems leading to breaching of UF_6 systems, and ultimately a UF_6 release exposing workers in the area.

The uncontrolled event is the seismic event that leads to failure of the UF_6 process systems and UF_6 release. The event is assumed to have high consequences to the worker present in the area.

For the controlled event, the mitigative measure is to administratively limit exposure by requiring worker action to evacuate the area(s) of concern during a seismic event to ensure that the consequences of inhalation of uranic material and HF are low (IROFS39a). Sufficient time is available for the worker to detect and to evacuate the area(s) of concern. The resulting risk index is (3), which is acceptable risk.

The index number for the initiating event was conservatively assumed to be (-2). The UF_6 cascades and piping systems do not have an explicit seismic design basis. Information on the annual frequency of earthquakes is provided in Section 3.2.6.4. The peak horizontal ground acceleration at an annual frequency of 1E-02 is approximately 0.01g. The seismic capacity of the UF_6 piping systems is assumed to be capable of maintaining UF_6 confinement to at least a 0.01g earthquake. Actual seismic capacity of the piping is likely to be higher than 0.01g. Therefore, it is conservative to assign an initiating event index to UF_6 piping failure of (-2).

The failure probability index for the administrative controls/procedures of IROFS39a was determined to be (-3). This corresponds to an administrative IROFS that must be performed in response to a rare unplanned demand per NUREG-1520. The IROFS justification for enhanced administrative control is discussed in Section 3.8.3.

Table 3.7-4 External Events and Fire Accident Descriptions

Accident Identifier: EE-SEISMIC-WORKER EVAC – CAB

The initial failure (initiating event) is excessive seismic motions imposed beyond the capacity of UF_6 piping systems leading to breaching of UF_6 systems, and ultimately a UF_6 release exposing workers in the area. The areas involved in the associated sequence that may lead to this magnitude of release are as follows:

Centrifuge Assembly Building, Centrifuge Test Facility, Post-Mortem Facility

The uncontrolled event is the seismic event that leads to failure of the UF_6 process systems and UF_6 release. Although the consequences in the CAB areas (except TP8-1) have been calculated as a low category (1), for risk reduction, the event is assumed to have intermediate consequences to the worker present in the area. Refer to TP8-1 for discussion on consequences and IROFS for the TP8-1 accident sequence.

For the controlled event, the mitigative measure is to administratively limit exposure by requiring worker action to evacuate the area(s) of concern during a seismic event to ensure that the consequences of inhalation of uranic material and HF are low (IROFS39a). Sufficient time is available for the worker to detect and to evacuate the area(s) of concern. As a result of the success of IROFS39a, the accident analysis shows that the risk index is at an acceptable level.

The index number for the initiating event was conservatively assumed to be (-2). The piping systems do not have an explicit seismic design basis. Information on the annual frequency of earthquakes in provided in Section 3.2.6.4. The peak horizontal ground acceleration at an annual frequency of 1E-02 is approximately 0.01g. The seismic capacity of the UF_6 piping system is assumed to be capable of maintaining UF_6 confinement to at least a 0.01g earthquake. Actual seismic capacity of the piping is likely to be higher than 0.01g. Therefore, it is conservative to assign an initiating event index to UF_6 piping failure of (-2).

The failure probability index for the administrative controls/procedures of IROFS39a was determined to be (-2). This corresponds to an administrative IROFS that must be performed in response to a rare unplanned demand per NUREG-1520.

Table 3.7-4 External Events and Fire Accident Descriptions

Accident Identifier: FF6-1 (CRDB General Areas)

(See Table 4.1-2) The frequency index number for the initiating event was determined to be (-2). The NUREG-1520 criteria – no failures of this type in this facility in 30 yrs – applies. This failure frequency index was based on evidence from similarly designed Urenco European plants which have a combined plant history of greater than 30 yrs in which no fire events have occurred in any uranium areas.

The uranium inventory is up to 9.43E6 kg (2.08E7 lb) and consists of UF_6 contained in 48Y and 30B cylinders located in storage or transit into and out of the area via overhead crane or on a cylinder transporter (to and from the UF_6 Handling Area).

The uncontrolled event is fire propagating into this area from other areas that could result in a release of the UF_6 inventory (failure of IROFS35: automatic closure of fire-rated barrier opening protectives (e.g., doors dampers, penetration seals, fusable links) to ensure the integrity of area fire barriers prevents fire from propagating into areas containing uranic material). This event was analyzed to have a high consequence.

For the controlled event, fire would not propagate into the area due to (1) automatic closure of fire-rated barrier opening protectives (e.g., doors dampers, penetration seals, fusable links) to ensure the integrity of area fire barriers prevents fire from propagating into areas containing uranic material (IROFS35) and (2) administratively limit transient combustibles in the area of concern and adjacent areas (IROFS36a/36d).

The failure probability index for fire barriers was determined to be (-3). This corresponds to an active engineered IROFS per NUREG-1520. The IROFS justification for high availability is discussed in Section 3.8.3.

The failure probability index for administrative controls/procedures of IROFS36a/d was determined to be (-3). The NUREG -1520 criteria – a routine administrative IROFS applies. The IROFS justification for enhanced administrative control is discussed in Section 3.8.3.

Accident Identifier: FF6-2 (CRDB General Areas)

(See Table 4.1-2) The frequency index number for the initiating event was determined to be (-2). The NUREG-1520 criteria – no failures of this type in this facility in 30 yrs – applies. This failure frequency index was based on evidence from similarly designed Urenco European plants which have a combined plant history of greater than 30 yrs in which no fire events have occurred in any uranium areas.

The uranium inventory is up to 9.43E6 (2.08E7 lb) and consists of UF_6 contained in 48Y and 30B cylinders located in storage or transit into and out of the area via overhead crane or on a cylinder transporter (to and from the UF_6 Handling Area).

The uncontrolled event is a fire involving excessive transient combustibles within the CRDB that could result in a release of the UF_6 inventory (failure of IROFS36a: administratively limit transient combustible loading in areas containing uranic material and adjacent areas to ensure integrity of uranic material components/containers and limit the quantity of uranic materials at risk to ensure consequences to the public are low). This event was analyzed to have a high consequence.

For the controlled event, a fire considering expected in-situ and transient combustibles would be a low consequence event. The UF_6 inventory was discounted as not being released during a fire due to insufficient combustibles being present to cause failure of a cylinder. Preventive measures are to administratively limit transient combustible loading in areas containing uranic material and adjacent areas to ensure integrity of uranic material components/containers and limit the quantity of uranic materials at risk to ensure consequences to the public are low (IROFS36a).

The failure probability index for administrative controls/procedures of IROFS36a was determined to be (-3). The NUREG-1520 criteria – a routine administrative IROFS applies. The IROFS justification for enhanced administrative control is discussed in Section 3.8.3.

Table 3.7-4 External Events and Fire Accident Descriptions

Accident Identifier: FF7-1 (Cylinder Transporters/Movers)

The frequency index number for the initiating event was determined to be (-2). The NUREG-1520 criteria – no failures of this type in this facility in 30 yrs – applies This failure frequency index was based on evidence from similarly designed Urenco European plants which have a combined plant history of greater than 30 yrs in which no fire events have occurred in any uranium areas.

The uranium inventory would be one or more UF_6 cylinders (48Y, or a 30Bs) in transit.

The uncontrolled event is a fire involving excessive combustibles on any onsite cylinder transporter/mover that could result in a release of the UF_6 inventory (failure of IROFS36c: administratively limit onsite UF_6 cylinder transporters/movers to ensure only use of electric drive or diesel powered with a fuel capacity of less than 280 L (74 gal). This event was analyzed to have a high consequence.

For the controlled event, a fire considering expected in-situ and transient combustibles would be a low consequence event. The UF_6 inventory was discounted as not being released during a fire due to insufficient combustibles being present to cause failure of a cylinder. Cylinder transporter/mover design will be limited to be either electric drive or diesel drive with a fuel capacity of less than 280 L (74 gallons) (IROFS36c). Diesel powered onsite UF_6 cylinder transporters/movers are only used for cylinder transport outdoors or in the CRDB truck Bay. IROFS36c does not apply to the CAB.

The failure probability index for administrative controls/procedures of IROFS36c was determined to be (3). The NUREG-1520 criteria – a routine administrative IROFS applies. The IROFS justification for enhanced administrative control is discussed in Section 3.8.3.

Accident Identifier: FF15-1 (UF_6 Handling Area - typical for 3 modules/ Blending and Liquid Sampling Area)

The frequency index number for the initiating event was determined to be (-2). The NUREG-1520 criteria – no failures of this type in this facility in 30 yrs – applies This failure frequency index was based on evidence from similarly designed Urenco European plants which have a combined plant history of greater than 30 yrs in which no fire events have occurred in any uranium areas.

The uranium inventory is up to 4.00E5 kg (8.82E5 lb) in the UF_6 Handling Area and 1.46E5 kg (3.22E5 lb) in the Blending and Liquid Sampling Area and consists of UF_6 contained in cylinders, piping, manifolds, and hoses. Additional uranic material/HF inventory could be present on the carbon/alumina traps that capture UF_6 from the various feed, product, and tails system cold traps.

The uncontrolled event is fire propagating into this area from other areas that could result in a release of the uranium inventory (failure of IROFS35: automatic closure of fire-rated barrier opening protectives (e.g., doors, dampers, penetration seals, fusable links) to ensure the integrity of area fire barriers prevents fire from propagating into areas containing uranic material). This event was analyzed to have a high consequence.

For the controlled event, fire would not propagate into the area due to automatic closure of fire-rated barrier opening protectives (e.g., doors, dampers, penetration seals) to ensure the integrity of area fire barriers prevents fire from propagating into areas containing uranic material (IROFS35) and (2) administratively limit transient combustibles in the area of concern and adjacent areas (IROFS36a).

The failure probability index for fire barriers was determined to be (-3). This corresponds to an active engineered IROFS per NUREG-1520. The IROFS justification for high availability is discussed in Section 3.8.3.

The failure probability index for administrative controls/procedures of IROFS36a was determined to be (-3). The NUREG-1520 criteria – a routine administrative IROFS applies. The IROFS justification for enhanced administrative control is discussed in Section 3.8.3.

Table 3.7-4 External Events and Fire Accident Descriptions

Accident Identifier: FF16-1 (UF_6 Handling Area - typical for 3 modules/ Blending and Liquid Sampling Area)

The frequency index number for the initiating event was determined to be (-2). The NUREG-1520 criteria – no failures of this type in this facility in 30 yrs – applies. This failure frequency index was based on evidence from similarly designed Urenco European plants which have a combined plant history of greater than 30 yrs in which no fire events have occurred in any uranium areas.

The uranium inventory is up to 4.00E5 kg (8.82E5 lb) in the UF_6 Handling Area and 1.46E5 kg (3.22E5 lb) in the Blending and Liquid Sampling Area and consists of UF_6 contained in cylinders, piping, manifolds, and hoses. Additional uranic material/HF inventory could be present on the carbon/alumina traps that capture residual traces of UF_6 from the various feed, product, and tails system cold traps.

The uncontrolled event is a fire involving excessive transient combustibles within the area could result in a release of the uranium inventory (failure of IROFS36a: administratively limit transient combustible loading in areas containing uranic material and adjacent areas to ensure integrity of uranic material components/containers and limit the quantity of uranic material at risk to ensure consequences to the public are low). This event was analyzed to have a high consequence.

For the controlled event, a fire considering expected in-situ and transient combustibles would be a low consequence event. It is assumed that a fire in improperly placed transient combustibles could cause failure of a single cylinder hose. This could result in a pouring feed cylinder release (feed selected as bounding – highest pressure) of 1.3 kg of UF_6 over a 30-minute period. The remaining uranic material/HF inventory was discounted as not being released during this fire due to insufficient combustibles being present to cause failures of adjacent hoses, cylinders, piping, manifolds, or stainless steel chemical traps. The preventive measures are to administratively limit transient combustible loading in areas containing uranic material and adjacent areas to ensure integrity of uranic material components/containers and limit the quantity of uranic material at risk to ensure consequences to the public are low (IROFS36a).

The failure probability index for administrative controls/procedures of IROFS36a was determined to be (-3). The NUREG-1520 criteria – a routine administrative IROFS applies. The IROFS justification for enhanced administrative control is discussed in Section 3.8.3.

Table 3.7-4 External Events and Fire Accident Descriptions

Accident Identifier: FF16-2 (UF_6 Handling Area – typical for 3 modules/ Blending and Liquid Sampling Area)

The frequency index number for the initiating event was determined to be (-2). The NUREG-1520 criteria – no failures of this type in this facility in 30 yrs – applies This failure frequency index was based on evidence from similarly designed Urenco European plants which have a combined plant history of greater than 30 yrs in which no fire events have occurred in any uranium areas.

The uranium inventory is up to 4.00E5 kg (8.82E5 lb) in the UF_6 Handling Area and 1.46E5 kg (3.22E5 lb) in the Blending and Liquid Sampling Area and consists of UF_6 contained in cylinders, piping, manifolds, and hoses. Additional uranic material/HF inventory could be present on the carbon/alumina traps that capture residual traces of UF_6 from the various feed, product, and tails system cold traps.

The uncontrolled event is a fire involving excessive transient combustibles within the area could result in a release of the uranium inventory (failure of IROFS36a: administratively limit transient combustible loading in areas containing uranic material and adjacent areas to ensure integrity of uranic material components/containers and limit the quantity of uranic material at risk to ensure consequences to the public are low). This event was analyzed to have a high consequence.

For the controlled event, a fire considering expected in-situ and transient combustibles would be a low consequence event. It is assumed that fire could cause failures in the aluminum piping manifold and that 50% of the inventory feeding one assay (3.44 kg) (7.6 lb) would be released even though this piping is at sub atmospheric pressure. Continuing release from these manifolds was not considered since connected cylinders are at lower elevations and gravity pouring would be necessary for additional UF_6 to escape. The remaining uranic material/HF was discounted as not being released during this fire due to insufficient combustibles being present to cause failure of the cylinders or stainless steel chemical traps. The preventive measures are to administratively limit transient combustible loading in areas containing uranic material and adjacent areas to ensure integrity of uranic material components/containers and limit the quantity of uranic material at risk to ensure consequences to the public are low (IROFS36a).

The failure probability index for administrative controls/procedures of IROFS36a was determined to be (-3). The NUREG-1520 criteria – a routine administrative IROFS applies. The IROFS justification for enhanced administrative control is discussed in Section 3.8.3.

Table 3.7-4 External Events and Fire Accident Descriptions

Accident Identifier: FF24-1 (CRDB Ventilated Room)

(See Table 4.1-2) The frequency index number for the initiating event was determined to be (-2). The NUREG-1520 criteria – no failures of this type in this facility in 30 yrs – applies. This failure frequency index was based on evidence from similarly designed Urenco European plants which have a combined plant history of greater than 30 yrs in which no fire events have occurred in any uranium areas.

The uranium inventory is up to 500 kg (1100 lb) contained in 12 L (3.2 gal) metal containers and 210 L (55 gal) drums. Additional uranium inventory is present (periodically) in the form of a single 48Y or 30B cylinder present in the room for valve maintenance/change-out.

The uncontrolled event is fire propagating into this area from other areas that could result in a release of the uranium inventory (failure of IROFS35: automatic closure of fire-rated barriers opening protectives (e.g., doors, dampers, penetration seals, fusable links) to ensure the integrity of area fire barriers prevents fire from propagating into areas containing uranic material). This event was analyzed to have a high consequence.

For the controlled event, fire would not propagate into the area due (1) to automatic closure of fire-rated barriers opening protectives (e.g., doors, dampers, penetration seals) to ensure the integrity of area fire barriers prevents fire from propagating into areas containing uranic material (IROFS35) and (2) administratively limit transient combustibles in the area of concern and adjacent areas (IROFS36a/36d).

The failure probability index for fire barriers was determined to be (-3). This corresponds to an active engineered IROFS per NUREG-1520. The IROFS justification for high availability is discussed in Section 3.8.3.

The failure probability index for administrative controls/procedures of IROFS36a was determined to be (-3). The NUREG-1520 criteria – a routine administrative IROFS applies. The IROFS justification for enhanced administrative control is discussed in Section 3.8.3.

Table 3.7-4 External Events and Fire Accident Descriptions

Accident Identifier: FF25-1 (CRDB Ventilated Room)

(See Table 4.1-2) The frequency index number for the initiating event was determined to be (-2). The NUREG-1520 criteria – no failures of this type in this facility in 30 yrs – applies. This failure frequency index was based on evidence from similarly designed Urenco European plants which have a combined plant history of greater than 30 yrs in which no fire events have occurred in any uranium areas.

CRDB Ventilated Room – The uranium inventory is up to 500 kg (1100 lb) contained in 12 L (3.2 gal) metal containers and 210 L (55 gal) drums. Additional uranium inventory is present (periodically) in the form of a single 48Yor 30B cylinder present in the room for valve maintenance/change-out.

The uncontrolled event is a fire involving excessive transient combustibles within the area that could result in a release of the uranium inventory (failure of IROFS36d: administratively limit transient combustible loading in areas containing uranic material and adjacent areas to ensure integrity of uranic material components/containers and limit the quantity of uranic material at risk to ensure consequences to the public are low). This event was analyzed to have a high consequence.

For the controlled event, a fire considering expected in-situ and transient combustibles would be a low consequence event. It is assumed that a fire in improperly placed transient combustibles could cause failure of the nitrogen hose or vent line piping used to bleed gas from cylinders during valve servicing and/or subsequent nitrogen pressure test. The resulting release would be bounded by a feed or tails cylinder (48Y has the largest inventory) which results in a puff release at the 1.4 bar (20.3 psia) valve test pressure with a subsequent pouring cylinder release at room temperature. The puff releases 3.83 kg of UF_6 and the continuing release is a cumulative 0.42 kg of UF_6 over 30 minutes. The remaining uranic material/HF inventory in the cylinder, sealed metal drums, chemical traps, and waste containers was discounted as not being released during this fire due to insufficient combustibles being present to cause failure of the cylinder or metal containers. Preventive measures are to administratively limit transient combustible loading in areas containing uranic material and adjacent areas to ensure integrity of uranic material components/containers and limit the quantity of uranic material at risk to ensure consequences to the public are low (IROFS36d).

The failure probability index for administrative controls/procedures of IROFS36d was determined to be (-3). The NUREG-1520 criteria – a routine administrative IROFS applies. The IROFS justification for enhanced administrative control is discussed in Section 3.8.3.

Table 3.7-4 External Events and Fire Accident Descriptions

Accident Identifier: FF25-2 (CRDB Ventilated Room)

(See Table 4.1-2) The frequency index number for the initiating event was determined to be (-2). The NUREG-1520 criteria – no failures of this type in this facility in 30 yrs – applies. This failure frequency index was based on evidence from similarly designed Urenco European plants which have a combined plant history of greater than 30 yrs in which no fire events have occurred in any uranium areas.

The uranium inventory is up to 500 kg (1100 lb) contained in 12 L (3.2 gal) metal containers and 210 L (55 gal) drums. Additional uranium inventory is present (periodically) in the form of a single 48Y or 30B cylinder present in the room for valve maintenance/change-out.

The uncontrolled event is a fire involving excessive transient combustibles within the area that could result in a release of the uranium inventory (failure of IROFS36d: administratively limit transient combustible loading in areas containing uranic material and adjacent areas to ensure integrity of uranic material components/containers and limit the quantity of uranic material at risk to ensure consequences to the public are low). This event was analyzed to have a high consequence.

For the controlled event, a fire considering expected in-situ and transient combustibles would be a low consequence event. The fire presumes that up to 50 kg (110 lb) of uranic material/HF could be present in open 12 L (3.2 gal) containers and the bulking drum during transfer/bulking operations and driven off in the event of a fire. The remaining uranic material/HF inventory in the cylinder, sealed metal drums, chemical traps, and waste containers was discounted as not being released during this fire due to insufficient combustibles being present to cause failure of the cylinder or metal containers. The preventive measures are to administratively limit transient combustible loading in areas containing uranic material and adjacent areas to ensure integrity of uranic material components/containers and limit the quantity of uranic material at risk to ensure consequences to the public are low (IROFS36d).

The failure probability index for administrative controls/procedures of IROFS36d was determined to be (-3). The NUREG-1520 criteria – a routine administrative IROFS applies. The IROFS justification for enhanced administrative control is discussed in Section 3.8.3.

Table 3.7-4 External Events and Fire Accident Descriptions

Accident Identifier: FF42-1 (UBC Storage Pad Transporter/Mover)

The frequency index number for the initiating event was determined to be (-2). The NUREG-1520 criteria – no failures of this type in this facility in 30 yrs – applies. This failure frequency index was based on evidence from similarly designed Urenco European plants which have a combined plant history of greater than 30 yrs in which no fire events have occurred in any uranium areas.

The uranium inventory would be one or more UF_6 cylinders (a 48Y) in transit.

The uncontrolled event is a fire involving excessive combustibles on any UBC storage pad cylinder transporter/mover that could result in a release of the UF_6 inventory (failure of IROFS36c: administratively limit onsite UF_6 cylinder transporters/movers to ensure only use of electric drive or diesel powered with a fuel capacity of less than 280 L (74 gal). This event was analyzed to have a high consequence.

For the controlled event, a fire considering expected in-situ and transient combustibles would be a low consequence event. The UF_6 inventory was discounted as not being released during a fire due to insufficient combustibles being present to cause failure of a cylinder. Onsite cylinder transporter/mover design will be limited to be either electric drive or diesel drive with a fuel capacity of less than 280 L (74 gal). The preventive measure is to administratively limit onsite UF_6 cylinder transporters/movers to ensure only use of electric drive or diesel powered with a fuel capacity of less than 280 L (74 gal) (IROFS36c).

The failure probability index for administrative controls/procedures of IROFS36c was determined to be (-3). The NUREG-1520 criteria – a routine administrative IROFS applies. The IROFS justification for enhanced administrative control is discussed in Section 3.8.3.

Accident Identifier: FF43-1 (Uranium Byproduct Cylinders (UBC) Storage Pad)

The frequency index number for the initiating event was determined to be (-2). The NUREG-1520 criteria – no failures of this type in this facility in 30 yrs – applies. This failure frequency index was based on evidence from similarly designed Urenco European plants which have a combined plant history of greater than 30 yrs in which no fire events have occurred in any uranium areas.

The uranium inventory is up to 1.97E8 kg (4.34E8 lb) of UF_6 contained in 48Y cylinders located on the UBC Storage Pad.

The uncontrolled event is a fire involving excessive transient combustibles on the UBC Storage Pad (failure of IROFS36e: administratively limit transient combustible loading on the UBC Storage Pad to ensure cylinder integrity). This event was analyzed to have a high consequence.

For the controlled event, a fire considering expected in-situ and transient combustibles would be a low consequence event. The UF_6 inventory was discounted as not being released during a fire due to insufficient combustibles being present to cause failure of the cylinders. In order to prevent exposure to pooled flammable fuel fire on the pad, vehicles to be driven onto the storage pad itself will be limited in fuel capacity to less than 280 L (74 gal) of flammable or combustible fuel. The preventive measure is to administratively limit transient combustible loading on the UBC Storage Pad to ensure cylinder integrity (IROFS36e).

The failure probability index for administrative controls/procedures of IROFS36e was determined to be (-3). The NUREG-1520 criteria – a routine administrative IROFS applies. The IROFS justification for enhanced administrative control is discussed in Section 3.8.3.

Table 3.7-4 External Events and Fire Accident Descriptions

Accident Identifier: FF43-2 (UBC Storage Pad)

The frequency index number for the initiating event was determined to be (-2). The NUREG-1520 criteria – no failures of this type in this facility in 30 yrs – applies. This failure frequency index was based on evidence from similarly designed Urenco European plants which have a combined plant history of greater than 30 yrs in which no fire events have occurred in any uranium areas.

The uranium inventory is up to 1.97E8 kg (4.34E8 lb) of UF_6 contained in 48Y cylinders located on the UBC Storage Pad.

The uncontrolled event is a fire involving excessive transient combustibles adjacent to the UBC Storage Pad (failure of IROFS36f: administratively limit designated routes for bulk fueling vehicles onsite to ensure UBC cylinder integrity). This event was analyzed to have a high consequence.

For the controlled event, a fire considering expected in-situ and transient combustibles would be a low consequence event. The UF_6 inventory was discounted as not being released during a fire due to insufficient combustibles being present to cause failure of the cylinders. A typical service vehicle fire on the UBC Storage Pad perimeter road was evaluated and shown to not result in failure of the UBC cylinders. The preventive measure is to administratively limit designated routes for bulk fueling vehicles onsite to ensure UBC cylinder integrity (IROFS36f).

The failure probability index for administrative controls/procedures of IROFS36f was determined to be (-3). The NUREG-1520 criteria – a routine administrative IROFS applies. The IROFS justification for enhanced administrative control is discussed in Section 3.8.3.

Accident Identifier: FF44-1 (UBC Storage Pad)

The frequency index number for the initiating event was determined to be (-2). The NUREG-1520 criteria – no failures of this type in this facility in 30 yrs – applies. This failure frequency index was based on evidence from similarly designed Urenco European plants which have a combined plant history of greater than 30 yrs in which no fire events have occurred in any uranium areas.

The uranium inventory is up to 1.97E8 kg (4.34E8 lb) of UF_6 contained in 48Y cylinders located on the UBC Storage Pad.

The uncontrolled event is a wildland fire spreading onto the property and exposing the UBC Storage Pad (failure of IROFS36g: administratively limit onsite vegetation fire sources to ensure integrity of important targets). This event was analyzed to have a high consequence.

For the controlled event, a fire would be a low consequence event. Off property vegetation is of a low density and the fence line is over 100 m (328 ft) away. An off-property wildland fire will not cause failure of cylinders. The preventive measure is to administratively limit onsite vegetation fire sources to ensure integrity of important targets (IROFS36g).

The failure probability index for administrative controls/procedures of IROFS36g was determined to be (-3). The NUREG-1520 criteria – a routine administrative IROFS applies. The IROFS justification for enhanced administrative control is discussed in Section 3.8.3.

Table 3.7-4 External Events and Fire Accident Descriptions

Accident Identifier: FF-WORKER EVAC

The initial failure (initiating event) is a fire of sufficient magnitude to result in a release of UF_6 or uranic material.

The frequency index number for the initiating event was determined to be (-2). The NUREG-1520 criteria – no failures of this type in this facility in 30 yrs – applies. This failure frequency index was based on evidence from similarly designed Urenco European plants which have a combined plant history of greater than 30 yrs in which no fire events have occurred in any uranium areas.

The uncontrolled event is a fire involving excessive transient combustibles within the area or a fire propagating into the area of concern that could result in a fire of sufficient magnitude to results in a release of UF_6 failure of IROFS36a/d: administratively limit transient combustible loading in areas containing uranic material material and adjacent areas to ensure integrity of uranic material components/containers and limit the quantity of uranic material at risk to ensure consequences to the worker are not high. This event was assumed to have a high consequence.

For the controlled event, a fire considering expected in-situ and transient combustibles would not result in high consequence for the worker. This control reduces the material at risk during a fire due to insufficient combustibles being present to cause failure of lower temperature susceptible components and allows sufficient time for the area worker to evacuate. The preventive measure is to administratively limit transient combustible loading in areas of concern and adjacent areas to ensure insufficient combustibles are present to develop a fire of sufficient magnitude and duration, which could result in high consequences to the worker (IROFS 36a or IROFS36d). To achieve an acceptable risk, the mitigative measure is to administratively limit exposure by requiring worker action to evacuate the area(s) of concern during a fire to ensure that the consequences of inhalation of uranic material and HF are low (IROFS39b). Sufficient time is available for the worker to detect and to evacuate the area(s) of concern. The consequence analysis shows that the consequence has been mitigated to a low category (1). The application of IROFS36a of IROFS36d is dependent upon the area identified in the FF accident scenario.

Accident Identifier FF-WORKER EVACa: The uncontrolled case is initiating event index (-2) with a consequence category (3). Risk index is (9) and IROFS are needed.

Table 3.7-4 External Events and Fire Accident Descriptions

Accident Identifier FF-WORKER EVACb: Preventive measures are to administratively limit transient combustible loading (IROFS36a or IROFS36d), in areas of concern and adjacent areas to ensure that insufficient combustibles are present to develop a significant fire magnitude, which could result in failure of a mechanical system/component (i.e., primary containment) and UF_6 releases exceeding the 10 CFR 70.61 thresholds. The likelihood category is (1) with a consequence category of (3) due to failure of IROFS36a/d. Risk index is (3) and is acceptable prior to evacuation.

Accident Identifier FF-WORKER EVACc: Preventive measures are to administratively limit transient combustible loading in area containing uranic material and adjacent areas to ensure integrity of uranic material components/containers and limit the quantity of uranic material at risk to ensure consequences to the worker are not high (IROFS36a or IROFS36d). A mitigative measure to administratively limit exposure by requiring worker action to evacuate the area(s) of concern during a fire to ensure that the consequences of inhalation of uranic material and HF are low (IROFS39b). Sufficient time is available for the worker to detect and to evacuate the area(s) of concern. In this event, the success of IROFS36a or IROFS36d, and IROFS39b is evaluated. This is an evaluation of the event with mitigation. The likelihood category is (3). The mitigated event is evaluated to have low worker consequences (category 1). This results in a risk index of (3) which is acceptable risk.

Accident Identifier FF-WORKER EVACd: Preventive measures are to administratively limit transient combustible loading in area containing uranic material and adjacent areas to ensure integrity of uranic material components/containers and limit the quantity or uranic material at risk to ensure consequences to the worker are not high (IROFS36a or IROFS36d). A mitigative measure to administratively limit exposure by requiring worker action to evacuate the area(s) of concern during a fire to ensure that the consequences of inhalation of uranic and HF are low (IROFS39b). Sufficient time is available for the worker to detect and to evacuate the area(s) of concern. In this event, the failure of IROFS39b is evaluated. This is a controlled event without mitigation due to worker evacuation to reduce the severity of the consequence. The resulting likelihood index is (-4) which is combined with the intermediate consequence and results in a risk index of (4) which is an acceptable risk.

Accident Identifier FF-WORKER EVACe: Preventive measures are to administratively limit transient combustible loading in areas containing uranic material and adjacent areas to ensure integrity of uranic material components/containers and limit the quantity of uranic material at risk to ensure consequences to the worker are not high (IROFS36a or IROFS36d). A mitigative measure to administratively limit exposure by requiring worker action to evacuate the area(s) of concern during a fire to ensure that the consequences of inhalation or uranic material are low (IROFS39b). Sufficient time is available for the worker to detect and to evacuate the area(s) of concern. In this event, the failure of IROFS36a or IROFS36d, and IROFS39b is evaluated. This is a controlled event without mitigation due to worker evacuation to reduce the severity of the consequence. The resulting likelihood index is (-7) which is combined with the high consequence and results in a risk index of (3) which is an acceptable risk.

The failure probability index for the administrative controls/procedures of IROFS39b was determined to be (-2). This corresponds to an administrative IROFS that must be performed in response to a rare unplanned demand per NUREG-1520. The failure probability index for administrative controls/procedures of IROFS36a or IROFS36d was determined to be (-3). The NUREG-1520 criteria – a routine administrative IROFS - applies. The IROFS justification for enhanced administrative control is discussed in Section3.8.3.

Table 3.7-4 External Events and Fire Accident Descriptions

Accident Identifier: FF-WORKER EVAC-CAB (CTF & PMF)

The frequency index number for the initiating event was determined to be (-2). The NUREG-1520 criteria – no failures of this type in this facility in 30 yrs – applies. This failure frequency index was based on evidence from similarly designed Urenco European plants which have a combined plant history of greater than 30 yrs in which no fire events have occurred in any uranium areas.

The UF_6 inventory is up to 50 kg (110 lb) contained in the centrifuge test facility (CTF) and post mortem facility (PMF).

The uncontrolled event is a fire involving excessive transient combustibles within the area that could result in a fire of sufficient magnitude to result in a release of UF_6 (failure of IROFS36i): administratively limit transient combustible loading in areas containing uranic material to ensure integrity of uranic material components/containers and limit the quantity of uranic material at risk to ensure consequences to the worker are not high. This event was assumed to have a high consequence.

For the controlled event, a fire considering expected in-situ and transient combustibles would be an intermediate consequence event for the worker. This control reduces the material at risk during a fire due to insufficient combustibles being present to cause failure of lower temperature susceptible components (gaskets, sample containers) used in the test assembly and test piping. The mitigative measures are to administratively limit transient combustible loading in areas containing uranic material to ensure integrity of uranic material components/containers and limit the quantity of uranic material at risk to ensure consequences to the worker are not high (IROFS36i). In order to mitigate the severity to low consequence, the IROFS required is the mitigative measure to administratively limit exposure by requiring worker action to evacuate the area(s) of concern during a fire to ensure that the consequences of inhalation of uranic material and HF are low (IROFS39b). Sufficient time is available for the worker to detect and to evacuate the area(s) of concern. The consequence analysis shows that the consequence has been mitigated to a low category (1).

Table 3.7-4 External Events and Fire Accident Descriptions

Accident Identifier: FF-WORKER EVAC – CAB (CTF & PMF) - continued

Accident Identifier FF-WORKER EVAC – CABa: The uncontrolled case is initiating event index (-2) with a consequence category (3). Risk index is (9) and IROFS are needed.

Accident Identifier FF-WORKER EVAC – CABb: Mitigative measures are to administratively limit transient combustible loading in areas containing uranic material to ensure integrity of uranic material components/containers and limit the quantity of uranic material at risk to ensure consequences to the worker are not high (IROFS36i). The controlled case consequence analysis shows that the resulting worker consequence is an intermediate category (2). Risk index is (6) and additional IROFS are needed.

Accident Identifier FF-WORKER EVAC – CABc: Mitigative measures are to administratively limit transient combustible loading in areas containing uranic material to ensure integrity of uranic material components/containers and limit the quantity of uranic material at risk to ensure consequences to the worker are not high (IROFS36i). The initiating event is (-2) with a failure probability index of (-3). The likelihood category is (1). The event is assumed to have high worker consequences (category 3). This results in a risk index is of (3) which is an acceptable risk.

Accident Identifier FF-WROKER EVAC – CABd: Mitigative measures are (1) to administratively limit transient combustible loading in areas containing uranic material to ensure integrity of uranic material components/containers and limit the quantity of uranic material at risk to ensure consequences to the worker are not high (IROFS36i) and (2) administratively limit exposure by requiring worker action to evacuate the area(s) of concern during a fire to ensure that the consequences of inhalation of uranic material and HF are low (IROFS39b). Sufficient time is available for the worker to detect and evacuate the area(s) of concern. In this event, the success of IROFS36i and IROFS39b is evaluated. This is an evaluation of the event with mitigation. The initiating event is (-2) with a likelihood index of (-2). The likelihood category is (3). The mitigated event is evaluated to have low worker consequences (category 1). This results in a risk index of (3) which is acceptable risk.

Accident Identifier FF-WORKER EVAC – CABe: Mitigative measures are (1) to administratively limit transient combustible loading in areas containing uranic material to ensure integrity of uranic material components/containers and limit the quantity of uranic material at risk of ensure consequences to the worker are not high (IROFS36i) and (2) administratively limit exposure by requiring worker action to evacuate the area(s) of concern during a fire to ensure that the consequences of inhalation of uranic material and HF are low (IROFS39b). In this event, the failure of IROFS39b is evaluated. This is a controlled event without mitigation due to worker evacuation to reduce the severity of the consequence. The resulting likelihood index is (-4) which is combined with the intermediate consequence and results in a risk index of (4) which is an acceptable risk.

The failure probability index for administrative controls/procedures of IROFS39b was determined to be (-2). The NUREG-1520 criteria – a routine administrative IROFS – applies.

The failure probability index for administrative controls/procedures of IROFS36i was determined to be (-3). The NUREF-1520 criteria – a routine administrative IROFS – applies. The IROFS justification for enhanced administrative control is discussed in Section 3.8.3.

Table 3.7-4 External Events and Fire Accident Descriptions

Accident Identifier: EE-CHEM RELEASE-WORKER EVAC-CAB

The initial failure is a release of UF_6 of a magnitude that would require worker evacuation. The systems involved in the associated accident sequences that may lead to this magnitude of release are as follows:

Centrifuge Test Facility (CTF) and Post-Mortem Facility (PMF)

The uncontrolled event is a release of a magnitude that results in worker consequences of inhalation of uranic material and HF that are greater than a low category (1). The subsequent release from this event is assumed to have high consequences to the worker present in the area.

For the controlled event, the mitigative measure is to administratively limit worker exposure by requiring a pre-emptive evacuation of the areas of concern in the event of severe weather (tornado, tornado missile, high wind, excessive roof snow load, and roof ponding and site flooding due to local intense precipitation) so that any inhalation exposure to uranic material and HF are low (IROFS39d). Sufficient time is available for the worker to become aware of the severe weather condition and to evacuate the area(s) of concern. The resulting risk index is (3), which is acceptable risk.

The frequency index number for each initiating event of the associated accident sequences was determined to be (-2). The NUREG-1520 criteria – no failures of this type in this facility in 30 yrs – applies. This failure frequency index was selected based on evidence from history of similarly designed Urenco European plants, which have a combined plant history of greater than 30 yrs, and have not had a failure of this type.

The failure probability index for the administrative controls/procedures of IROFS39d was determined to be (-3). This corresponds to an administrative IROFS that must be performed in response to a rare unplanned demand per NUREG-1520. The IROFS justification for enhanced administrative control is discussed in Section 3.8.3.

Table 3.7-4 External Events and Fire Accident Descriptions

Accident Identifier: OC1-1 (UBC Storage Pad)

(See Table 4.1-2) The initial failure (initiating event) involves a fire in a construction site preparations vehicle located near the UBC Storage Pad resulting from an impact or failure of an item in the construction vehicle (e.g., ruptured fuel line, electrical short).

For the uncontrolled accident sequence, the construction site preparations vehicle is located such that the vehicle fire propagates to the operating UBC Storage Pad due to the fuel run-off or presence of combustible material. Flame impingement on a UBC cylinder results in a ruptured cylinder. A release of UF_6 occurs, resulting in high consequences to the public.

For the controlled accident sequence, the preventative measures are: (1) administratively control the proximity of construction vehicles to the UBC Storage Pad by a temporary barrier of sufficient strength to alert the vehicle operator upon impact with the barrier (IROFS50a) and (2) administratively control the proximity of construction vehicles to the UBC Storage Pad by a second and independent temporary barrier of sufficient strength to alert the vehicle operator upon impact with the barrier (IROFS50h).

The frequency index number of the initiating event was determined to be (-1). The NUREG-1520 criteria – a few failures may occur during facility lifetime – apply. This failure frequency index was selected based on limited evidence from industry events involving fires caused by construction vehicles.

The failure probability index of (-2) was selected for IROFS50a. IROFS50a is enhanced by use of physical device (barrier) corresponding to a failure probability index of (-3) for an enhanced administrative IROFS per NUREG-1520, but increased by an order of magnitude for conservatism. The IROFS justification for enhanced administrative control is discussed in Section 3.8.3.

The failure probability index of (-2) was selected for IROFS50h. IROFS50h is enhanced by use of a physical device (barrier) corresponding to a failure probability index of (-3) for an enhanced administrative IROFS per NUREG-1520, but increased by an order of magnitude for potential dependent failures between IROFS50a and IROFS50h. The IROFS justification for enhanced administrative control is discussed in Section 3.8.3.

Table 3.7-4 External Events and Fire Accident Descriptions

Accident Identifier: OC2-1 (External Construction)

The initial failure (initiating event) is external construction site preparations vehicle failure or human error resulting in an impact to areas of concern.

For the uncontrolled accident sequence involving an external construction site preparations vehicle, the construction vehicle impacts an area of concern. The impact results in damage and subsequent UF_6 release with high consequences to the public and/or worker. For SBM 1001, external construction site preparation vehicles that will impart 408,000 pounds force or less to the SBM 1001 wall at vehicle maximum weight and speed are allowed.

For the controlled accident sequence, the preventative measures are: (1) administratively control the proximity of external construction site preparations vehicles around areas of concern by establishing a temporary barrier of sufficient strength to alert the operator upon impact with the barrier (IROFS50b) and (2) administratively control the proximity of external construction site preparations vehicles around area of concern by establishing a second and independent temporary barrier of sufficient strength to alert the operator upon impact with the barrier (IROFS50c).

The frequency index number for the initiating event was determined to be (-1). The NUREG-1520 criteria-a few failures may occur during facility lifetime-apply. This failure frequency index was selected based on limited evidence from industry events involving chemical releases caused by construction vehicles.

The failure probability index of (-2) was selected for IROFS50b. IROFS50b is enhanced by use of a physical device (barrier) corresponding to a failure probability index of (-3) for an enhanced administrative IROFS per NUREG-1520, but increased by an order of magnitude for conservatism. The IROFS justification for enhance administrative control is discussed in Section 3.8.3.

The failure probability index of (-2) was selected for IROFS50c. IROFS50c is enhanced by use of a physical device (barrier) corresponding to a failure probability index of (-3) for an enhanced administrative IROFS per NUREG-1520, but increased by an order of magnitude for potential dependent failure between IROFS50b and IROFS 50c. The IROFS justification foe enhanced administrative control is discussed in Section 3.8.3.

Table 3.7-4 External Events and Fire Accident Descriptions

Accident Identifier: OC3-1 (Internal Construction)

The initial failure (initiating event) is an internal construction vehicle failure or human error resulting in an impact to process equipment of concern.

For the uncontrolled accident sequence, an internal construction vehicle impacts the process equipment of concern resulting in a UF_6 release due to equipment damage. The consequences to the local worker were calculated to be intermediate, based on a pouring release via failed connecting piping or complete valve failure for a heated feed cylinder.

For the controlled accident sequence, the preventative measures are: (1) administratively control proximity of internal construction vehicles by establishing an appropriate barrier to alert the operator of proximity to process equipment of concern (IROFS50d), and (2) administratively control the movement of internal construction vehicles to prevent impact with operating process equipment of concern by the use of spotters (IROFS50e).

The frequency index number for the initiating event was determined to be (-1). The NUREG-1520 criteria - a few failures may occur during facility lifetime – apply. This is based on limited evidence from industry events involving chemical releases caused by construction vehicles.

The failure probability index for administrative controls/procedures of IROFS50d was determined to be (-2). The NUREG-1520 criteria – a routine administrative IROFS applies.

A failure probability index of (-1) was selected IROFS50e. This corresponds to a failure probability index of (-2) for an administrative IROFS for a routine planned operation in accordance with NUREG-1520, but increased by an order of magnitude to account for the limitations of the spotter and the IROFS50d barrier.

Accident Identifier: OC4-1 (External Construction Cranes)

The initial failure (initiating event) involves the failure of a external construction crane or human error resulting in an impact to an area of concern.

For the uncontrolled accident sequence, a construction crane's load impacts an area of concern. The impact results in damage and subsequent UF_6 release with high consequences to the public and worker.

For the controlled accident sequence, the preventive measures are: (1) administratively control the proximity of external construction cranes around area of concern by establishing a "No Swing Zone" (IROFS50f), and (2) administratively control the movement of external construction cranes around areas of concern by use of spotters (IROFS50g).

The frequency index number for the initiating event was determined to be (-1). The NUREG-1520 criteria – a few failures may occur during facility lifetime – apply. This failure frequency index was selected based on limited evidence from industry events involving chemical releases caused by construction vehicles.

The failure probability index of (-3) was selected for IROFS50f. This corresponds to an enhanced administrative IROFS per NUREF-1520. IROFS50f is enhanced by requiring independent verification and application of critical lift requirements. The IROFS justification for enhanced administrative control is discussed in Section 3.8.3.

A failure probability index of (-1) was selected for IROFS50g. This corresponds to a failure probability index of (-2) for an administrative IROFS for a routine planned operation in accordance with NUROG-1520, but increased by an order of magnitude to account for the index modification for potential dependent failure between IROFS50f and IROFS50g.

Table 3.7-5 Uranic Material Assumptions for Criticality Accident Sequences

Accident Sequences	Assumed Mass of ^{235}U (kg)	Assumed ^{235}U Enrichment ($^{w}/_{o}$)
PT2-5	600.1	6.0
PT3-5	1.6	6.0
PB1-3	(1)	6.0
PB2-2	92.9	6.0
PB2-6	600.1	6.0
VR1-1	1.6	6.0
VR1-2	1.6	6.0
VR2-7	1.6	6.0
FR1-1	22.1	6.0
FR1-2	22.1	6.0
FR2-1	22.1	6.0
FR2-2	22.1	6.0
DS1-1	22.1	6.0
DS1-2	22.1	6.0
DS1-3	7.2	6.0
DS2-1	22.1	6.0
DS2-2	22.1	6.0
DS2-3	7.2	6.0
DS3-1	22.1	6.0
DS3-2	22.1	6.0
CL3-1	1.6	6.0
CP1-2	600.1	6.0
SW1-1	22.1	6.0
SW1-2	22.1	6.0
LW1-1	6.7	6.0
LW1-2	22.1	6.0
LW1-3	22.1	6.0
LW2-1	6.7	6.0
LW3-1	6.7	6.0
LW5-1	6.7	6.0
RD1-1	(1)	6.0
EC3-1	(2)	(2)
EE-LP-CRDB BUNKER (CR)	(3)	6.0

Table 3.7-5 Uranic Material Assumptions for Criticality Accident Sequences

Accident Sequences	Assumed Mass of ^{235}U (kg)	Assumed ^{235}U Enrichment ($^{w}/_{o}$)

Notes:

(1) 38 cylinders, each with 600.1 kg ^{235}U

(2) Accident sequence EC3-1 considers the potential for a criticality in the facility resulting from the enrichment control being lost. In the accident sequence, it is assumed that all enrichment controls have failed, allowing enrichments in excess of the normal 5 $^{w}/_{o}$ ^{235}U limit. An exact upper bound enrichment and ^{235}U mass are not calculated. Instead, it is assumed that:

- previously geometrically favorable components no longer can be relied upon to prevent criticality; and
- moderation controls used to prevent criticality in the product cylinder may be inadequate, given the reduced levels of moderator that could result in criticality if enrichment levels were higher.

While the availability of moderating materials is not certain, the accident sequence conservatively assumes that operating with product enrichment in excess of 5 $^{w}/_{o}$ ^{235}U will result in a criticality somewhere within the facility. Criticality is considered in all cases to be a high consequence event. The identified IROFS are considered to provide adequate protection against this high consequence event.

(3) Sufficient mass of ^{235}U was assumed to be available to cause a criticality event.

Table 3.7-6 Cascade System

(Note 1)

Criticality Assessment of Passive Safe-By-Design Components				
Component Description (A)	**Sequence ID (B)**	**Critical Design Attribute (C)**	**Review of Up-Set Conditions to Change Geometry (Applicable HAZOP Guidewords) (D)**	**Notes/Comments (E)**
Cascade Piping				
Cascade Piping Arrangement				
Cascade Centrifuge				
Cascade Valve Frame Piping				
Cascade Valve Frame Piping Arrangement				
Cascade Evacuation Roots Vacuum Pump				
Cascade Evacuation Rotary Vane Evacuation Pump				
Cascade Evacuation Cold Trap				
Cascade Evacuation Carbon Trap				
Cascade Evacuation Chemical Absorber Oil Trap				
Cascade Evacuation Oil Trap				
Cascade Evacuation Pump/Chemical Trap Set				
Cascade Sampling Gravimetric Sample Bottle				
Cascade Sampling Finger Type Sample Bottle				
Cascade Sampling Roots Vacuum Pump				
Cascade Sampling Evacuation Rotary Vane Pump				
Cascade Sampling Carbon Trap				
Cascade Sampling Chemical Absorber Oil Trap				
Cascade Sampling Oil Trap				

Table 3.7-6 Cascade System

(Note 1)

Criticality Assessment of Passive Safe-By-Design Components				
Component Description (A)	**Sequence ID (B)**	**Critical Design Attribute (C)**	**Review of Up-Set Conditions to Change Geometry (Applicable HAZOP Guidewords) (D)**	**Notes/Comments (E)**
Cascade Sampling Pump/Chemical Trap Set				
Pump Transport Device				
Chemical Trap Transport Device				
Mobile Rig				
Vacuum Cleaner				

Table 3.7-6 Note:

1. The system is considered classified. As such, specific information regarding design of components has been intentionally excluded to protect the classified nature of the information.

Column Descriptions:

Column A: This column provides a brief description of each component.

Column B: This column identifies the accident sequence associated with the passive component.

Column C: This column identifies the critical design attribute under consideration along with the conservative values used in the criticality analysis.

Column D: This column identifies the applicable guidewords from the ISA HAZOP procedure that are used to assess the criticality design margin. Additional guidewords are addressed as applicable in the detailed assessment.

Column E: This column provides any notes, comments and concluding statements.

Table 3.7-7 Product Take-off System

Criticality Assessment of Passive Safe-By-Design Components - ETC4009614				
Component Description (A)	**Sequence ID (B)**	**Safe Design Attribute k_{off} < 0.95 @ 6 wt % (Design Value, See Note) (C)**	**Review of Upset Conditions to Change Geometry (Applicable HAZOP Guidewords) (D)**	**Notes/Comments (E)**
Product Piping (largest piping diameter in the system)	LOSS OF SAFE BY DESIGN ATTRIBUTE	DIAMETER 22.4 cm		Based on qualitative assessment, there is margin between the parameter values at normal operating conditions of pipe diameter, amount of U^{235} and enrichment and the conservative design/analysis values for these parameters assumed for criticality.
Product Piping Arrangement	LOSS OF SAFE BY DESIGN ATTRIBUTE	PHYSICAL ARRNGMT		Based on qualitative assessment, there is margin between the normal operating conditions and the conservative design/analysis conditions assumed for criticality.
WS1001 & WS251 Product Roots Pumps	LOSS OF SAFE BY DESIGN ATTRIBUTE	VOLUME 19.3 liters (each pump)		Based on qualitative assessment, there is margin between the parameter values at normal operating conditions of Roots Pump volume, amount of U^{235} and enrichment and the conservative design/analysis values for these parameters assumed for criticality.
WS1001 & WS251 Product Roots Pump Set	LOSS OF SAFE BY DESIGN ATTRIBUTE	PHYSICAL ARRNGMNT See Crit. Calc		Based on qualitative assessment, there is margin between the normal operating conditions and the conservative design/analysis conditions assumed for criticality.
Product Cold Trap	LOSS OF SAFE BY DESIGN ATTRIBUTE	DIAMETER 22.4 cm		Based on qualitative assessment, there is margin between the parameter values at normal operating conditions of Cold Trap diameter, amount of U^{235} and enrichment and the conservative design/analysis values for these parameters assumed for criticality.
Product Cold Traps	LOSS OF SAFE BY DESIGN ATTRIBUTE	PHYSICAL ARRNGMNT See Crit. Calc		Based on qualitative assessment, there is margin between the normal operating conditions and the conservative design/analysis conditions assumed for criticality.
Carbon Type - A Trap (Product Vent Pump & Trap Set)	LOSS OF SAFE BY DESIGN ATTRIBUTE	DIAMETER 22.4 cm		Based on qualitative assessment, there is margin between the parameter values at normal operating conditions of Carbon Trap diameter, amount of U^{235} and enrichment and the conservative design/analysis values for these parameters assumed for criticality.

Table 3.7-7 Product Take-off System

Criticality Assessment of Passive Safe-By-Design Components - ETC4009614				
Component Description (A)	**Sequence ID (B)**	**Safe Design Attribute k_{eff} < 0.95 @ 6 wt % (Design Value, See Note) (C)**	**Review of Upset Conditions to Change Geometry (Applicable HAZOP Guidewords) (D)**	**Notes/Comments (E)**
Al_2O_3 Type-A Trap (Product Vent Pump & Trap Set)	LOSS OF SAFE BY DESIGN ATTRIBUTE	DIAMETER 22.4 cm		Based on qualitative assessment, there is margin between the parameter values at normal operating conditions of Aluminum Oxide Trap diameter, amount of U^{235} and enrichment and the conservative design/analysis values for these parameters assumed for criticality.
Al_2O_3 Adsorption Oil Filter (Product Vent Pump & Trap Set)	LOSS OF SAFE BY DESIGN ATTRIBUTE	VOLUME 19.3 liters		Based on qualitative assessment, there is margin between the parameter values at normal operating conditions of Al_2O_3 Oil Filter volume, amount of U^{235} and enrichment and the conservative design/analysis values for these parameters assumed for criticality.
ARS40-65 Exhaust Oil Filter (Product Vent Pump & Trap Set)	LOSS OF SAFE BY DESIGN ATTRIBUTE	VOLUME 19.3 liters		Based on qualitative assessment, there is margin between the parameter values at normal operating conditions of Exhaust Oil Filter volume, amount of U^{235} and enrichment and the conservative design/analysis values for these parameters assumed for criticality.
D40-BCS Rotary Vane Pump (Product Vent Pump and Trap Set)	LOSS OF SAFE BY DESIGN ATTRIBUTE	VOLUME 19.3 liters		Based on qualitative assessment, there is margin between the parameter values at normal operating conditions of Rotary Vane Pump volume, amount of U^{235} and enrichment and the conservative design/analysis values for these parameters assumed for criticality.
Product Vent Pump and Trap Set	LOSS OF SAFE BY DESIGN ATTRIBUTE	PHYSICAL ARRNGMNT See Crit. Calc		Based on qualitative assessment, there is margin between the normal operating conditions and the conservative design/analysis conditions assumed for criticality.
Assay Sampling Piping (largest pipe in system)	LOSS OF SAFE BY DESIGN ATTRIBUTE	DIAMETER 22.4 cm		Based on qualitative assessment, there is margin between the parameter values at normal operating conditions of pipe diameter, amount of U^{235} and enrichment and the conservative design/analysis values for these parameters assumed for criticality.

Table 3.7-7 Product Take-off System

Criticality Assessment of Passive Safe-By-Design Components - ETC4009614				
Component Description (A)	**Sequence ID (B)**	**Safe Design Attribute $k_{eff} < 0.95$ @ 6 wt % (Design Value, See Note) (C)**	**Review of Upset Conditions to Change Geometry (Applicable HAZOP Guidewords) (D)**	**Notes/Comments (E)**
Assay Sampling Piping Arrangement	LOSS OF SAFE BY DESIGN ATTRIBUTE	PHYSICAL ARRNGMT Bounded by Product Piping Arrangement		Based on qualitative assessment, there is margin between the normal operating conditions and the conservative design/analysis conditions assumed for criticality.
Mixed Bed (Al_2O_3 & C) Type-A Tra (Assay Sampling Rig)	LOSS OF SAFE BY DESIGN ATTRIBUTE	DIAMETER 22.4 cm		Based on qualitative assessment, there is margin between the parameter values at normal operating conditions of Mixed Bed Trap diameter, amount of U^{235} and enrichment and the conservative design/analysis values for these parameters assumed for criticality.
Al_2O_3 Adsorption Oil Filter (Assay Sampling Rig)	LOSS OF SAFE BY DESIGN ATTRIBUTE	VOLUME 19.3 liters		Based on qualitative assessment, there is margin between the parameter values at normal operating conditions of Al_2O_3 Oil Filter volume, amount of U^{235} and enrichment and the conservative design/analysis values for these parameters assumed for criticality.
ARS40-65 Exhaust Oil Filter (Assay Sampling Rig)	LOSS OF SAFE BY DESIGN ATTRIBUTE	VOLUME 19.3 liters		Based on qualitative assessment, there is margin between the parameter values at normal operating conditions of Exhaust Oil Filter volume, amount of U^{235} and enrichment and the conservative design/analysis values for these parameters assumed for criticality.
D40-BCS Rotary Vane Pump (Assay Sampling Rig)	LOSS OF SAFE BY DESIGN ATTRIBUTE	VOLUME 19.3 liters		Based on qualitative assessment, there is margin between the parameter values at normal operating conditions of Rotary Vane Pump volume, amount of ^{235}U and enrichment and the conservative design/analysis values for these parameters assumed for criticality.
Assay Sampling Rig	LOSS OF SAFE BY DESIGN ATTRIBUTE	PHYSICAL ARRNGMNT Bounded by Product Pump & Trap Set		Based on qualitative assessment, there is margin between the normal operating conditions and the conservative design/analysis conditions assumed for criticality.

Table 3.7-7 Product Take-off System

Criticality Assessment of Passive Safe-By-Design Components - ETC4009614				
Component Description (A)	**Sequence ID (B)**	**Safe Design Attribute k_{eff} < 0.95 @ 6 wt % (Design Value, See Note) (C)**	**Review of Upset Conditions to Change Geometry (Applicable HAZOP Guidewords) (D)**	**Notes/Comments (E)**
Cold Trap (K300) (Mobile Maintenance Rig)	LOSS OF SAFE BY DESIGN ATTRIBUTE	DIAMETER 22.4 cm		Based on qualitative assessment, there is margin between the parameter values at normal operating conditions of component diameter, amount of U^{235} and enrichment and the conservative design/analysis values for these parameters assumed for criticality.
Mixed Bed (Al_2O_3 & C) Type-A Trap (Mobile Maintenance Rig)	LOSS OF SAFE BY DESIGN ATTRIBUTE	DIAMETER 22.4 cm		Based on qualitative assessment, there is margin between the parameter values at normal operating conditions of Mixed Bed Trap diameter, amount of U^{235} and enrichment and the conservative design/analysis values for these parameters assumed for criticality.
Al_2O_3 Adsorption Oil Filter (Mobile Maintenance Rig)	LOSS OF SAFE BY DESIGN ATTRIBUTE	VOLUME 19.3 liters		Based on qualitative assessment, there is margin between the parameter values at normal operating conditions of Al_2O_3 Oil Filter volume, amount of U^{235} and enrichment and the conservative design/analysis values for these parameters assumed for criticality.
ARS40-65 Exhaust Oil Filter (Mobile Maintenance Rig)	LOSS OF SAFE BY DESIGN ATTRIBUTE	VOLUME 19.3 liters		Based on qualitative assessment, there is margin between the parameter values at normal operating conditions of Exhaust Oil Filter volume, amount of U^{235} and enrichment and the conservative design/analysis values for these parameters assumed for criticality.
D40-BCS Rotary Vane Pump (Mobile Maintenance Rig)	LOSS OF SAFE BY DESIGN ATTRIBUTE	VOLUME 19.3 liters		Based on qualitative assessment, there is margin between the parameter values at normal operating conditions of Rotary Vane Pump volume, amount of U^{235} and enrichment and the conservative design/analysis values for these parameters assumed for criticality.

Table 3.7-7 Product Take-off System

Criticality Assessment of Passive Safe-By-Design Components - ETC4009614				
Component Description (A)	**Sequence ID (B)**	**Safe Design Attribute $k_{eff} < 0.95$ @ 6 wt % (Design Value, See Note) (C)**	**Review of Upset Conditions to Change Geometry (Applicable HAZOP Guidewords) (D)**	**Notes/Comments (E)**
WSU251 Roots Pump (Mobile Maintenance Rig)	LOSS OF SAFE BY DESIGN ATTRIBUTE	VOLUME 19.3 liters		Based on qualitative assessment, there is margin between the normal operating conditions and the conservative design/analysis conditions assumed for criticality.
Mobile Maintenance Rig	LOSS OF SAFE BY DESIGN ATTRIBUTE	PHYSICAL ARRNGMNT See Crit. Calc		Based on qualitative assessment, there is margin between the normal operating conditions and the conservative design/analysis conditions assumed for criticality.
Pipette	LOSS OF SAFE BY DESIGN ATTRIBUTE	DIAMETER 22.4 cm		Based on qualitative assessment, there is margin between the parameter values at normal operating conditions of Pipette diameter, amount of U^{235} and enrichment and the conservative design/analysis values for these parameters assumed for criticality.
Upset Conditions				
All			More Heat	Based on qualitative assessment, it is highly unlikely for a process deviation to result in a more heat condition that would adversely affect the maintenance of margin to criticality associated with design and maximum operating parameter values for amount of U^{235} and enrichment.
All			More Pressure	Based on qualitative assessment, it is highly unlikely for a process deviation to result in a more pressure condition that would adversely affect the maintenance of margin to criticality associated with design and maximum operating parameter values for amount of U^{235} and enrichment.
All			Corrosion/Erosion	Based on qualitative assessment, it is highly unlikely for a process deviation to result in a corrosion/erosion condition that would affect the maintenance of margin to criticality associated with design and maximum operating parameter values for physical arrangement.

Table 3.7-7 Product Take-off System

Criticality Assessment of Passive Safe-By-Design Components - ETC4009614				
Component Description (A)	**Sequence ID (B)**	**Safe Design Attribute $k_{eff} < 0.95$ @ 6 wt % (Design Value, See Note) (C)**	**Review of Upset Conditions to Change Geometry (Applicable HAZOP Guidewords) (D)**	**Notes/Comments (E)**
All			Loss of Confinement or Leakage	Based on qualitative assessment, postulated loss of confinement or leakage will not result in any appreciable accumulation of U^{235} material because of physical limitations of the process (sub-atmospheric). As a result, loss of confinement does not result in a potential for criticality and therefore its consequence is low.
All			Fire	Components are protected from fire to ensure the safe design attribute of physical arrangement is not adversely impacted. The application of IROFS36a and its implementing procedure provides control of transient combustibles, limiting the fire magnitude and location in areas containing uranic material.
All			Maintenance	Approved maintenance procedures will be used to ensure that maintenance does not adversely impact the safe design attribute of physical arrangement. Maintenance is part of the generic management measures as described in Section 3.1.8.3 of the ISA Summary.
SBD Components by Physical Arrangement			Impact/Drop	Components are protected from impact/drop where necessary to ensure the safe design attribute of physical arrangement is not adversely impacted. Seismic II/I design criteria apply to support and anchorages of SBD components whose as-designed, safe configuration must be maintained during a design basis earthquake (DBE). Meeting these criteria provides protection from impact/drop due to a bounding event (i.e., DBE).
SBD Components by Physical Arrangement			External Events (Construction on Site)	Bounded by the seismic, tornado missile or impact/drop event in accordance with the ISA Meeting Minutes on Operate While Constructing.
SBD Components by Physical Arrangement			External Events (Failure of Above-Ground Liquid Storage Tanks)	Criticality due to this event is not credible, as it is bounded by local intense precipitation and protection from floods is no longer required as a result of LAR-08-07 approved by NRC SER (NRC, 2009).
SBD Components by Physical Arrangement			External Events (Hurricane)	Not a design basis event for the NEF site due to its distance from the coast (ISA Summary, Section 3.2.3.4.3)

Table 3.7-7 Product Take-off System

Criticality Assessment of Passive Safe-By-Design Components - ETC4009614				
Component Description (A)	**Sequence ID (B)**	**Safe Design Attribute k_{eff} < 0.95 @ 6 wt % (Design Value, See Note) (C)**	**Review of Upset Conditions to Change Geometry (Applicable HAZOP Guidewords) (D)**	**Notes/Comments (E)**
SBD Components by Physical Arrangement			External Events (Seismic)	Components are protected from seismic events where necessary to ensure the safe design attribute of physical arrangement is not adversely impacted. Unless specifically exempted by a nuclear criticality safety evaluation or analysis, SBD components and piping require seismic design to ensure that minimum spacing requirements are maintained in the event of a DBE or damage from a nearby II/I structure, system or component .
SBD Components by Physical Arrangement			External Events (Tornado)	Components are protected from tornado events with the application of IROFS27e to prevent building collapse to ensure the safe design attribute of physical arrangement is not adversely impacted.
SBD Components by Physical Arrangement			External Events (Tornado Missile)	Components are protected from tornado missile events where necessary to ensure the safe design attribute of physical arrangement is not adversely impacted. Unless specifically exempted by a nuclear criticality safety evaluation or analysis, SBD components and piping require tornado missile protection to ensure that minimum spacing requirements are maintained during a tornado event.
SBD Components by Physical Arrangement			External Events (Local Intense Precipitation)	Criticality due to this event is not credible as a result of LAR-08-07 approved by NRC SER (NRC, 2009). Components are protected from local intense precipitation with the application of IROFS27e to prevent building collapse to ensure the safe design attribute of physical arrangement is not adversely impacted. IROFS27e does not prevent water intrusion. Flooding is included in nuclear criticality safety evaluations and analyses for SBD components and piping located on the first floor to demonstrate non-credibility. Items located on higher floors are not subject to flooding.
SBD Components by Physical Arrangement			External Events (External Fire)	Components are protected from external fire events with the application of IROFS35 (fire barriers) and IROFS36g (vegetation fire control) to ensure the safe design attribute of physical arrangement is not adversely impacted.

Table 3.7-7 Product Take-off System

Criticality Assessment of Passive Safe-By-Design Components - ETC4009614				
Component Description (A)	**Sequence ID (B)**	**Safe Design Attribute $k_{eff} < 0.95$ @ 6 wt % (Design Value, See Note) (C)**	**Review of Upset Conditions to Change Geometry (Applicable HAZOP Guidewords) (D)**	**Notes/Comments (E)**
SBD Components by Physical Arrangement			External Events (Snow/Ice)	Components are protected from snow/ice events with the application of IROFS27e to prevent building collapse to ensure the safe design attribute of physical arrangement is not adversely impacted. Water intrusion due to the snow/ice events is bounded by local intense precipitation.
Adherence to Double Contingency Principle				
All				Double Contingency Principle is satisfied as follows: The geometry is controlled such that the components are individually SBD by physical size or jointly SBD by physical arrangement, and no single credible event or failure has been identified that has the potential to adversely impact the safety function of the passive design features. The enrichment is also controlled such that no single credible event or failure could result in loss of enrichment control leading to criticality.

Column Descriptions:

Column A: This column provides a brief description of each component.

Column B: This column identifies the accident sequence associated with the passive component.

Column C: This column identifies the safe design attribute. The design value can be found in ETC4009614. Modeled value in criticality calculation may be more conservative than the design value.

Column D: This column identifies the applicable guidewords from the ISA HAZOP procedure that are used to assess the criticality design margin. Additional guidewords are addressed as applicable in the detailed assessment.

Column E: This column provides any notes, comments and concluding statements.

Table 3.7-8 Tails System

Criticality Assessment of Passive Safe-By-Design Components - ETC4009609				
Component Description (A)	**Sequence ID (B)**	**Safe Design Attribute $k_{eff} < 0.95$ @ 6 wt % (unless physical arrangement) (Design Value, See Note) (C)**	**Review of Up-Set Conditions to Change Geometry (Applicable HAZOP Guidewords) (D)**	**Notes/Comments (E)**
Tails Piping (largest piping diameter in the system)	LOSS OF SAFE-BY-DESIGN ATTRIBUTE	DIAMETER 22.4 cm		Based on qualitative assessment, there is margin between the parameter values at normal operating conditions of pipe diameter, amount of U^{235} and enrichment and the conservative design/analysis values for these parameters assumed for criticality.
Tails Piping Arrangement	LOSS OF SAFE-BY-DESIGN ATTRIBUTE	PHYSICAL ARRNGMT		Based on qualitative assessment, there is margin between the normal operating conditions and the conservative design/analysis conditions assumed for criticality.
WS1001 & WS251 Tails Roots Pumps	LOSS OF SAFE BY DESIGN ATTRIBUTE	VOLUME 19.3 liters (each pump)		Based on qualitative assessment, there is margin between the parameter values at normal operating conditions of Roots Pump volume, amount of U^{235} and enrichment and the conservative design/analysis values for these parameters assumed for criticality.
WS1001 & WS251 Tails Roots Pump Set	LOSS OF SAFE-BY-DESIGN ATTRIBUTE	PHYSICAL ARRNGMNT Bounded by Product Pumps		Based on qualitative assessment, there is margin between the normal operating conditions and the conservative design/analysis conditions assumed for criticality.

Table 3.7-8 Tails System

Criticality Assessment of Passive Safe-By-Design Components - ETC4009609				
Component Description (A)	**Sequence ID (B)**	**Safe Design Attribute $k_{eff} < 0.95$ @ 6 wt % (unless physical arrangement) (Design Value, See Note) (C)**	**Review of Up-Set Conditions to Change Geometry (Applicable HAZOP Guidewords) (D)**	**Notes/Comments (E)**
Mixed Bed (Al_2O_3 & C) Type-A Trap (Tails Evacuation Rig)	LOSS OF SAFE-BY-DESIGN ATTRIBUTE	DIAMETER 22.4 cm		Based on qualitative assessment, there is margin between the parameter values at normal operating conditions of Mixed Bed Trap diameter, amount of U^{235} and enrichment and the conservative design/analysis values for these parameters assumed for criticality.
Al_2O_3 Adsorption Oil Filter (Tails Evacuation Rig)	LOSS OF SAFE-BY-DESIGN ATTRIBUTE	VOLUME 19.3 liters		Based on qualitative assessment, there is margin between the parameter values at normal operating conditions of Al_2O_3 Oil Filter volume, amount of U^{235} and enrichment and the conservative design/analysis values for these parameters assumed for criticality.
ARS40-65 Exhaust Oil Filter (Tails Evacuation Rig)	LOSS OF SAFE-BY-DESIGN ATTRIBUTE	VOLUME 19.3 liters		Based on qualitative assessment, there is margin between the parameter values at normal operating conditions of Exhaust Oil Filter volume, amount of U^{235} and enrichment and the conservative design/analysis values for these parameters assumed for criticality.
D40-BCS Rotary Vane Pump (Tails Evacuation Rig)	LOSS OF SAFE-BY-DESIGN ATTRIBUTE	VOLUME 19.3 liters		Based on qualitative assessment, there is margin between the parameter values at normal operating conditions of Rotary Vane Pump volume, amount of U^{235} and enrichment and the conservative design/analysis values for these parameters assumed for criticality.

Table 3.7-8 Tails System

Criticality Assessment of Passive Safe-By-Design Components - ETC4009609				
Component Description (A)	**Sequence ID (B)**	**Safe Design Attribute $k_{eff} < 0.95$ @ 6 wt % (unless physical arrangement) (Design Value, See Note) (C)**	**Review of Up-Set Conditions to Change Geometry (Applicable HAZOP Guidewords) (D)**	**Notes/Comments (E)**
Tails Evacuation Rig	LOSS OF SAFE-BY-DESIGN ATTRIBUTE	PHYSICAL ARRNGMNT Bounded by Product Pump & Trap Set		Based on qualitative assessment, there is margin between the normal operating conditions and the conservative design/analysis conditions assumed for criticality.
Assay Sampling Piping (largest pipe ID in system)	LOSS OF SAFE BY DESIGN ATTRIBUTE	DIAMETER 22.4 cm		Based on qualitative assessment, there is margin between the parameter values at normal operating conditions of pipe diameter, amount of U^{235} and enrichment and the conservative design/analysis values for these parameters assumed for criticality.
Assay Sampling Piping Arrangement	LOSS OF SAFE BY DESIGN ATTRIBUTE	PHYSICAL ARRNGMT Bounded by Product Piping Arrangement		Based on qualitative assessment, there is margin between the normal operating conditions and the conservative design/analysis conditions assumed for criticality.
Mixed Bed (Al_2O_3 & C) Type-A Trap (Assay Sampling Rig)	LOSS OF SAFE BY DESIGN ATTRIBUTE	DIAMETER 22.4 cm		Based on qualitative assessment, there is margin between the parameter values at normal operating conditions of Mixed Bed Trap diameter, amount of U^{235} and enrichment and the conservative design/analysis values for these parameters assumed for criticality.

Table 3.7-8 Tails System

Criticality Assessment of Passive Safe-By-Design Components - ETC4009609				
Component Description (A)	**Sequence ID (B)**	**Safe Design Attribute $k_{eff} < 0.95$ @ 6 wt % (unless physical arrangement) (Design Value, See Note) (C)**	**Review of Up-Set Conditions to Change Geometry (Applicable HAZOP Guidewords) (D)**	**Notes/Comments (E)**
Al_2O_3 Adsorption Oil Filter (Assay Sampling Rig)	LOSS OF SAFE-BY-DESIGN ATTRIBUTE	VOLUME 19.3 liters		Based on qualitative assessment, there is margin between the parameter values at normal operating conditions of Al_2O_3 Oil Filter volume, amount of U^{235} and enrichment and the conservative design/analysis values for these parameters assumed for criticality.
ARS40-65 Exhaust Oil Filter (Assay Sampling Rig)	LOSS OF SAFE BY DESIGN ATTRIBUTE	VOLUME 19.3 liters		Based on qualitative assessment, there is margin between the parameter values at normal operating conditions of Exhaust Oil Filter volume, amount of U^{235} and enrichment and the conservative design/analysis values for these parameters assumed for criticality.
D40-BCS Rotary Vane Pump (Assay Sampling Rig)	LOSS OF SAFE BY DESIGN ATTRIBUTE	VOLUME 19.3 liters		Based on qualitative assessment, there is margin between the parameter values at normal operating conditions of Rotary Vane Pump volume, amount of U^{235} and enrichment and the conservative design/analysis values for these parameters assumed for criticality.
Assay Sampling Rig	LOSS OF SAFE BY DESIGN ATTRIBUTE	PHYSICAL ARRNGMNT Bounded by Product Pump & Trap Set		Based on qualitative assessment, there is margin between the normal operating conditions and the conservative design/analysis conditions assumed for criticality.

Table 3.7-8 Tails System

Criticality Assessment of Passive Safe-By-Design Components - ETC4009609				
Component Description (A)	**Sequence ID (B)**	**Safe Design Attribute $k_{eff} < 0.95$ @ 6 wt % (unless physical arrangement) (Design Value, See Note) (C)**	**Review of Up-Set Conditions to Change Geometry (Applicable HAZOP Guidewords) (D)**	**Notes/Comments (E)**
Cold Trap (K300) (Mobile Maintenance Rig)	LOSS OF SAFE BY DESIGN ATTRIBUTE	DIAMETER 22.4 cm		Based on qualitative assessment, there is margin between the parameter values at normal operating conditions of component diameter, amount of U^{235} and enrichment and the conservative design/analysis values for these parameters assumed for criticality.
Mixed Bed (Al_2O_3 & C) Type-A Trap (Mobile Maintenance Rig)	LOSS OF SAFE BY DESIGN ATTRIBUTE	DIAMETER 22.4 cm		Based on qualitative assessment, there is margin between the parameter values at normal operating conditions of Mixed Bed Trap diameter, amount of U^{235} and enrichment and the conservative design/analysis values for these parameters assumed for criticality.
Al_2O_3 Adsorption Oil Filter (Mobile Maintenance Rig)	LOSS OF SAFE BY DESIGN ATTRIBUTE	VOLUME 19.3 liters		Based on qualitative assessment, there is margin between the parameter values at normal operating conditions of Al_2O_3 Oil Filter volume, amount of U^{235} and enrichment and the conservative design/analysis values for these parameters assumed for criticality.
ARS40-65 Exhaust Oil Filter (Mobile Maintenance Rig)	LOSS OF SAFE BY DESIGN ATTRIBUTE	VOLUME 19.3 liters		Based on qualitative assessment, there is margin between the parameter values at normal operating conditions of Exhaust Oil Filter volume, amount of U^{235} and enrichment and the conservative design/analysis values for these parameters assumed for criticality.

Table 3.7-8 Tails System

Criticality Assessment of Passive Safe-By-Design Components - ETC4009609				
Component Description (A)	**Sequence ID (B)**	**Safe Design Attribute $k_{eff} < 0.95$ @ 6 wt % (unless physical arrangement) (Design Value, See Note) (C)**	**Review of Up-Set Conditions to Change Geometry (Applicable HAZOP Guidewords) (D)**	**Notes/Comments (E)**
D40-BCS Rotary Vane Pump (Mobile Maintenance Rig)	LOSS OF SAFE BY DESIGN ATTRIBUTE	VOLUME 19.3 liters		Based on qualitative assessment, there is margin between the parameter values at normal operating conditions of Rotary Vane Pump volume, amount of U^{235} and enrichment and the conservative design/analysis values for these parameters assumed for criticality.
WSU251 Roots Pump (Mobile Maintenance Rig)	LOSS OF SAFE BY DESIGN ATTRIBUTE	VOLUME 19.3 liters		Based on qualitative assessment, there is margin between the normal operating conditions and the conservative design/analysis conditions assumed for criticality.
Mobile Maintenance Rig	LOSS OF SAFE BY DESIGN ATTRIBUTE	PHYSICAL ARRNGMNT See Crit. Calc		Based on qualitative assessment, there is margin between the normal operating conditions and the conservative design/analysis conditions assumed for criticality.
Pipette	LOSS OF SAFE-BY-DESIGN ATTRIBUTE	DIAMETER 22.4 cm		Based on qualitative assessment, there is margin between the parameter values at normal operating conditions of Pipette diameter, amount of U^{235} and enrichment and the conservative design/analysis values for these parameters assumed for criticality.
Upset Conditions				

Table 3.7-8 Tails System

Criticality Assessment of Passive Safe-By-Design Components - ETC4009609				
Component Description (A)	**Sequence ID (B)**	**Safe Design Attribute $k_{eff} < 0.95$ @ 6 wt % (unless physical arrangement) (Design Value, See Note) (C)**	**Review of Up-Set Conditions to Change Geometry (Applicable HAZOP Guidewords) (D)**	**Notes/Comments (E)**
All			More Heat	Based on qualitative assessment, it is highly unlikely for a process deviation to result in a more heat condition that would adversely affect the maintenance of margin to criticality associated with design and maximum operating parameter values for amount of U^{235} and enrichment.
All			More Pressure	Based on qualitative assessment, it is highly unlikely for a process deviation to result in a more pressure condition that would adversely affect the maintenance of margin to criticality associated with design and maximum operating parameter values for amount of U^{235} and enrichment.
All			Corrosion/Erosion	Based on qualitative assessment, it is highly unlikely for a process deviation to result in a corrosion/erosion condition that would affect the maintenance of margin to criticality associated with design and maximum operating parameter values for physical arrangement.
All			Loss of Confinement or Leakage	Based on qualitative assessment, postulated loss of confinement or leakage will not result in any appreciable accumulation of U^{235} material because of physical limitations of the process (sub-atmospheric). As a result, loss of confinement does not result in a potential for criticality and therefore its consequence is low.
All			Fire	Components are protected from fire to ensure the safe design attribute of physical arrangement is not adversely impacted. The application of IROFS36a and its implementing procedure provides control of transient combustibles, limiting the fire magnitude and location in areas containing uranic material.
All			Maintenance	Approved maintenance procedures will be used to ensure that maintenance does not adversely impact the safe design attribute of physical arrangement. Maintenance is part of the generic management measures as described in Section 3.1.8.3 of the ISA Summary.

Table 3.7-8 Tails System

Criticality Assessment of Passive Safe-By-Design Components - ETC4009609				
Component Description (A)	**Sequence ID (B)**	**Safe Design Attribute $k_{eff} < 0.95$ @ 6 wt % (unless physical arrangement) (Design Value, See Note) (C)**	**Review of Up-Set Conditions to Change Geometry (Applicable HAZOP Guidewords) (D)**	**Notes/Comments (E)**
SBD Components by Physical Arrangement			Impact/Drop	Components are protected from impact/drop where necessary to ensure the safe design attribute of physical arrangement is not adversely impacted. Seismic II/I design criteria apply to support and anchorages of SBD components whose as-designed, safe configuration must be maintained during a design basis earthquake (DBE). Meeting these criteria provides protection from impact/drop due to a bounding event (i.e., DBE).
SBD Components by Physical Arrangement			External Events (Construction on Site)	Bounded by the seismic, tornado missile or impact/drop event in accordance with the ISA Meeting Minutes on Operate While Constructing.
SBD Components by Physical Arrangement			External Events (Failure of Above-Ground Liquid Storage Tanks)	Criticality due to this event is not credible, as it is bounded by local intense precipitation and protection from floods is no longer required as a result of LAR-08-07 approved by NRC SER (NRC, 2009).
SBD Components by Physical Arrangement			External Events (Hurricane)	Not a design basis event for the NEF site due to its distance from the coast (ISA Summary, Section 3.2.3.4.3)
SBD Components by Physical Arrangement			External Events (Seismic)	Components are protected from seismic events where necessary to ensure the safe design attribute of physical arrangement is not adversely impacted. Unless specifically exempted by a nuclear criticality safety evaluation or analysis, SBD components and piping require seismic design to ensure that minimum spacing requirements are maintained in the event of a DBE or damage from a nearby II/I structure, system or component.
SBD Components by Physical Arrangement			External Events (Tornado)	Components are protected from tornado events with the application of IROFS27e to prevent building collapse to ensure the safe design attribute of physical arrangement is not adversely impacted.

Table 3.7-8 Tails System

Criticality Assessment of Passive Safe-By-Design Components - ETC4009609				
Component Description (A)	**Sequence ID (B)**	**Safe Design Attribute $k_{eff} < 0.95$ @ 6 wt % (unless physical arrangement) (Design Value, See Note) (C)**	**Review of Up-Set Conditions to Change Geometry (Applicable HAZOP Guidewords) (D)**	**Notes/Comments (E)**
SBD Components by Physical Arrangement			External Events (Tornado Missile)	Components are protected from tornado missile events where necessary to ensure the safe design attribute of physical arrangement is not adversely impacted. Unless specifically exempted by a nuclear criticality safety evaluation or analysis, SBD components and piping require tornado missile protection to ensure that minimum spacing requirements are maintained during a tornado event.
SBD Components by Physical Arrangement			External Events (Local Intense Precipitation)	Criticality due to this event is not credible as a result of LAR-08-07 approved by NRC SER (NRC, 2009). Components are protected from local intense precipitation with the application of IROFS27e to prevent building collapse to ensure the safe design attribute of physical arrangement is not adversely impacted. IROFS27e does not prevent water intrusion. Flooding is included in nuclear criticality safety evaluations and analyses for SBD components and piping located on the first floor to demonstrate non-credibility. Items located on higher floors are not subject to flooding.
SBD Components by Physical Arrangement			External Events (External Fire)	Components are protected from external fire events with the application of IROFS35 (fire barriers) and IROFS36g (vegetation fire control) to ensure the safe design attribute of physical arrangement is not adversely impacted.
SBD Components by Physical Arrangement			External Events (Snow/Ice)	Components are protected from snow/ice events with the application of IROFS27e to prevent building collapse to ensure the safe design attribute of physical arrangement is not adversely impacted. Water intrusion due to the snow/ice events is bounded by local intense precipitation.
Adherence to Double Contingency Principle				

Table 3.7-8 Tails System

Criticality Assessment of Passive Safe-By-Design Components - ETC4009609				
Component Description (A)	**Sequence ID (B)**	**Safe Design Attribute $k_{eff} < 0.95$ @ 6 wt % (unless physical arrangement) (Design Value, See Note) (C)**	**Review of Up-Set Conditions to Change Geometry (Applicable HAZOP Guidewords) (D)**	**Notes/Comments (E)**
All				Double Contingency Principle is satisfied as follows: The geometry is controlled such that the components are individually SBD by physical size or jointly SBD by physical arrangement, and no single credible event or failure has been identified that has the potential to adversely impact the safety function of the passive design features. The enrichment is also controlled such that no single credible event or failure could result in loss of enrichment control leading to criticality.

Column Descriptions:

Column A: This column provides a brief description of each component.

Column B: This column identifies the accident sequence associated with the passive component.

Column C: This column identifies the safe design attribute. The design value can be found in ETC4009609. Modeled value in criticality calculation may be more conservative than the design value.

Column D: This column identifies the applicable guidewords from the ISA HAZOP procedure that are used to assess the criticality design margin. Additional guidewords are addressed as applicable in the detailed assessment.

Column E: This column provides any notes, comments and concluding statements.

Table 3.7-9 Product Blending System

Criticality Assessment of Passive Safe-By-Design Components				
Component Description (A)	**Sequence ID (B)**	**Critical Design Attribute (C)**	**Review of Up-Set Conditions to Change Geometry (Applicable HAZOP Guidewords) (D)**	**Notes/Comments (E)**
Product Blending Piping (largest pipe ID in the system)	LOSS OF SAFE-BY-DESIGN ATTRIBUTE	**DIAMETER** 24.4 cm (ID) Keff = 1.0 @ 6 wt %		Based on qualitative assessment, there is margin between the parameter values at normal operating conditions of pipe diameter, amount of ^{235}U and enrichment and the conservative design/analysis values for these parameters assumed for criticality.
			More Heat	Based on qualitative assessment, it is highly unlikely for a process deviation to result in a more heat condition that would cause an approach to the critical safe diameter and to adversely affect the maintenance of margin to criticality associated with design and maximum operating parameter values for amount of ^{235}U and enrichment.
			More Pressure	Based on qualitative assessment, it is highly unlikely for a process deviation to result in a more pressure condition that would cause an approach to the critical safe diameter and to adversely affect the maintenance of margin to criticality associated with design and maximum operating parameter values for amount of ^{235}U and enrichment.
			Corrosion/ Erosion	Based on qualitative assessment, it is highly unlikely for a process deviation to result in a corrosion/erosion condition that would cause an approach to the critical safe diameter. Materials are corrosion/erosion resistant and postulated complete wall erosion would not exceed the critical safe diameter.
			Loss of Confinement or Leakage	Based on qualitative assessment, postulated loss of piping system confinement or leakage will not result in any appreciable accumulation of ^{235}U material because of physical limitations of the process (sub-atmospheric). As a result, loss of confinement does not result in a potential for criticality and therefore its consequence is low.
			Fire	Components shall be protected from fire to ensure the critical design attribute of diameter is not adversely impacted.
			Maintenance	Configuration Management shall ensure that maintenance does not adversely impact the critical design attribute of diameter.
				Double Contingency Principle is satisfied as follows. The geometry is criticality safe and no single credible event or failure has been identified whereby the geometry could become unsafe. The enrichment is also controlled such that no single credible failure could result in loss of enrichment control.
Product Blending Piping Arrangement	LOSS OF SAFE-BY-DESIGN ATTRIBUTE	**PHYSICAL ARRANGEMENT**		Based on qualitative assessment, there is margin between the normal operating conditions and the conservative design/analysis conditions assumed for criticality.
			More Heat	Based on qualitative assessment, it is highly unlikely for a process deviation to result in a more heat condition that would adversely affect the maintenance of margin to criticality associated with design and maximum operating parameter values for amount of ^{235}U and enrichment.

Table 3.7-9 Product Blending System

Criticality Assessment of Passive Safe-By-Design Components				
Component Description (A)	**Sequence ID (B)**	**Critical Design Attribute (C)**	**Review of Up-Set Conditions to Change Geometry (Applicable HAZOP Guidewords) (D)**	**Notes/Comments (E)**
			More Pressure	Based on qualitative assessment, it is highly unlikely for a process deviation to result in a more pressure condition that would adversely affect the maintenance of margin to criticality associated with design and maximum operating parameter values for amount of ^{235}U and enrichment.
			Corrosion/ Erosion	Based on qualitative assessment, it is highly unlikely for a process deviation to result in a corrosion/erosion condition that would affect the maintenance of margin to criticality associated with design and maximum operating parameter values for physical arrangement.
			Loss of Confinement or Leakage	Based on qualitative assessment, postulated loss of piping system confinement or leakage will not result in any appreciable accumulation of ^{235}U material because of physical limitations of the process (sub-atmospheric). As a result, loss of confinement does not result in a potential for criticality and therefore its consequence is low.
			Fire	Components shall be protected from fire to ensure the critical design attribute of physical arrangement is not adversely impacted.
			Maintenance	Configuration Management shall ensure that maintenance does not adversely impact the critical design attribute of physical arrangement.
			Impact/Drop	Components shall be protected from impact/drop to ensure the critical design attribute of physical arrangement is not adversely impacted.
			External Events (Construction on Site)	Components shall be protected from construction on-Site to ensure the critical design attribute of physical arrangement is not adversely impacted.
			External Events (Failure of Above-Ground Liquid Storage Tanks)	Components shall be protected from external flooding (Failure of Above-Ground Liquid Storage Tanks) to ensure the critical design attribute of physical arrangement is not adversely impacted.
			External Events (External Fire)	Components shall be protected from external fire events to ensure the critical design attribute of physical arrangement is not adversely impacted.
				Double Contingency Principle is satisfied as follows. The geometry is criticality safe and no single credible event or failure has been identified whereby the geometry could become unsafe. The enrichment is also controlled such that no single credible failure could result in loss of enrichment control.

Table 3.7-9 Product Blending System

Criticality Assessment of Passive Safe-By-Design Components				
Component Description (A)	**Sequence ID (B)**	**Critical Design Attribute (C)**	**Review of Up-Set Conditions to Change Geometry (Applicable HAZOP Guidewords) (D)**	**Notes/Comments (E)**
Cold Trap (Product Blending Evacuation)	LOSS OF SAFE-BY-DESIGN ATTRIBUTE	**DIAMETER** 24.4 cm (ID) Keff = 1.0 @ 6 wt %		Based on qualitative assessment, there is margin between the parameter values at normal operating conditions of component diameter, amount of ^{235}U and enrichment and the conservative design/analysis values for these parameters assumed for criticality.
			More Heat	Based on qualitative assessment, it is highly unlikely for a process deviation to result in a more heat condition that would cause an approach to the critical safe diameter and to adversely affect the maintenance of margin to criticality associated with design and maximum operating parameter values for amount of ^{235}U and enrichment.
			More Pressure	Based on qualitative assessment, it is highly unlikely for a process deviation to result in a more pressure condition that would cause an approach to the critical safe diameter and to adversely affect the maintenance of margin to criticality associated with design and maximum operating parameter values for amount of ^{235}U and enrichment.
			Corrosion/ Erosion	Based on qualitative assessment, it is highly unlikely for a process deviation to result in a corrosion/erosion condition that would cause an approach to the critical safe diameter. Materials are corrosion/erosion resistant and postulated complete wall erosion would not exceed the critical safe diameter.
			Loss of Confinement or Leakage	Based on qualitative assessment, postulated loss of cold trap confinement or leakage and will not result in any appreciable accumulation of material because of physical limitations of the process (sub-atmospheric). As a result, loss of confinement does not result in a potential for criticality and therefore its consequence is low.
			Fire	Components shall be protected from fire to ensure the critical design attribute of diameter is not adversely impacted.
			Maintenance	Configuration Management shall ensure that maintenance does not adversely impact the critical design attribute of diameter.
				Double Contingency Principle is satisfied as follows. The geometry is criticality safe and no single credible event or failure has been identified whereby the geometry could become unsafe. The enrichment is also controlled such that no single credible failure could result in loss of enrichment control.
Product Blending Evacuation Pump	LOSS OF SAFE-BY-DESIGN ATTRIBUTE	**VOLUME** 24 liters Keff = 1.0 @ 6 wt %		Based on qualitative assessment, there is margin between the parameter values at normal operating conditions of Product Blending Evacuation Pump volume, amount of ^{235}U and enrichment and the conservative design/analysis values for these parameters assumed for criticality.
			More Heat	Based on qualitative assessment, it is highly unlikely for a process deviation to result in a more heat condition that would cause an approach to the critical safe volume and to adversely affect the maintenance of margin to criticality associated with design and maximum operating parameter values for amount of ^{235}U and enrichment.

Table 3.7-9 Product Blending System

Criticality Assessment of Passive Safe-By-Design Components				
Component Description (A)	**Sequence ID (B)**	**Critical Design Attribute (C)**	**Review of Up-Set Conditions to Change Geometry (Applicable HAZOP Guidewords) (D)**	**Notes/Comments (E)**
			More Pressure	Based on qualitative assessment, it is highly unlikely for a process deviation to result in a more pressure condition that would cause an approach to the critical safe volume and to adversely affect the maintenance of margin to criticality associated with design and maximum operating parameter values for amount of ^{235}U and enrichment.
			Corrosion/ Erosion	Based on qualitative assessment, it is highly unlikely for a process deviation to result in a corrosion/erosion condition that would cause an approach to the critical safe volume. Materials are corrosion/erosion resistant and postulated complete wall erosion would not exceed the critical safe volume.
			Loss of Confinement or Leakage	Based on qualitative assessment, postulated loss of Product Blending Evacuation Pump confinement or leakage will not result in any appreciable accumulation of ^{235}U material because of physical limitations of the process (sub-atmospheric). As a result, loss of confinement does not result in a potential for criticality and therefore its consequence is low.
			Fire	Components shall be protected from fire to ensure the critical design attribute of volume is not adversely impacted.
			Maintenance	Configuration Management shall ensure that maintenance does not adversely impact the critical design attribute of volume.
				Double Contingency Principle is satisfied as follows. The geometry is criticality safe and no single credible event or failure has been identified whereby the geometry could become unsafe. The enrichment is also controlled such that no single credible failure could result in loss of enrichment control.
Carbon Trap (Product Blending Evacuation)	LOSS OF SAFE-BY-DESIGN ATTRIBUTE	**DIAMETER** 24.4 cm (ID) Keff = 1.0 @ 6 wt %		Based on qualitative assessment, there is margin between the parameter values at normal operating conditions of Carbon Trap diameter, amount of ^{235}U and enrichment and the conservative design/analysis values for these parameters assumed for criticality.
			More Heat	Based on qualitative assessment, it is highly unlikely for a process deviation to result in a more heat condition that would cause an approach to the critical safe diameter and to adversely affect the maintenance of margin to criticality associated with design and maximum operating parameter values for amount of ^{235}U and enrichment.
			More Pressure	Based on qualitative assessment, it is highly unlikely for a process deviation to result in a more pressure condition that would cause an approach to the critical safe diameter and to adversely affect the maintenance of margin to criticality associated with design and maximum operating parameter values for amount of ^{235}U and enrichment.
			Corrosion/ Erosion	Based on qualitative assessment, it is highly unlikely for a process deviation to result in a corrosion/erosion condition that would cause an approach to the critical safe diameter. Materials are corrosion/erosion resistant and postulated complete wall erosion would not exceed the critical safe diameter.

Table 3.7-9 Product Blending System

Criticality Assessment of Passive Safe-By-Design Components				
Component Description (A)	**Sequence ID (B)**	**Critical Design Attribute (C)**	**Review of Up-Set Conditions to Change Geometry (Applicable HAZOP Guidewords) (D)**	**Notes/Comments (E)**
			Loss of Confinement or Leakage	Based on qualitative assessment, postulated loss of Carbon Trap confinement or leakage will not result in any appreciable accumulation of ^{235}U material because of physical limitations of the process (sub-atmospheric). As a result, loss of confinement does not result in a potential for criticality and therefore its consequence is low.
			Fire	Components shall be protected from fire to ensure the critical design attribute of diameter is not adversely impacted.
			Maintenance	Configuration Management shall ensure that maintenance does not adversely impact the critical design attribute of diameter.
				Double Contingency Principle is satisfied as follows. The geometry is criticality safe and no single credible event or failure has been identified whereby the geometry could become unsafe. The enrichment is also controlled such that no single credible failure could result in loss of enrichment control.
Aluminum Oxide Trap (Product Blending Evacuation)	LOSS OF SAFE-BY-DESIGN ATTRIBUTE	**DIAMETER** 24.4 cm (ID) Keff = 1.0 @ 6 wt %		Based on qualitative assessment, there is margin between the parameter values at normal operating conditions of Aluminum Oxide Trap diameter, amount of ^{235}U and enrichment and the conservative design/analysis values for these parameters assumed for criticality.
			More Heat	Based on qualitative assessment, it is highly unlikely for a process deviation to result in a more heat condition that would cause an approach to the critical safe diameter and to adversely affect the maintenance of margin to criticality associated with design and maximum operating parameter values for amount of ^{235}U and enrichment.
			More Pressure	Based on qualitative assessment, it is highly unlikely for a process deviation to result in a more pressure condition that would cause an approach to the critical safe diameter and to adversely affect the maintenance of margin to criticality associated with design and maximum operating parameter values for amount of ^{235}U and enrichment.
			Corrosion/ Erosion	Based on qualitative assessment, it is highly unlikely for a process deviation to result in a corrosion/erosion condition that would cause an approach to the critical safe diameter. Materials are corrosion/erosion resistant and postulated complete wall erosion would not exceed the critical safe diameter.
			Loss of Confinement or Leakage	Based on qualitative assessment, postulated loss of Aluminum Oxide Trap confinement or leakage will not result in any appreciable accumulation of ^{235}U material because of physical limitations of the process (sub-atmospheric). As a result, loss of confinement does not result in a potential for criticality and therefore its consequence is low.
			Fire	Components shall be protected from fire to ensure the critical design attribute of diameter is not adversely impacted.

Table 3.7-9 Product Blending System

Criticality Assessment of Passive Safe-By-Design Components				
Component Description (A)	**Sequence ID (B)**	**Critical Design Attribute (C)**	**Review of Up-Set Conditions to Change Geometry (Applicable HAZOP Guidewords) (D)**	**Notes/Comments (E)**
			Maintenance	Configuration Management shall ensure that maintenance does not adversely impact the critical design attribute of diameter.
				Double Contingency Principle is satisfied as follows. The geometry is criticality safe and no single credible event or failure has been identified whereby the geometry could become unsafe. The enrichment is also controlled such that no single credible failure could result in loss of enrichment control.
Chemical Absorber Oil Trap (Product Blending Evacuation)	LOSS OF SAFE-BY-DESIGN ATTRIBUTE	**VOLUME** 24 liters Keff = 1.0 @ 6 wt %		Based on qualitative assessment, there is margin between the parameter values at normal operating conditions of Chemical Absorber Oil Trap volume, amount of ^{235}U and enrichment and the conservative design/analysis values for these parameters assumed for criticality.
			More Heat	Based on qualitative assessment, it is highly unlikely for a process deviation to result in a more heat condition that would cause an approach to the critical safe volume and to adversely affect the maintenance of margin to criticality associated with design and maximum operating parameter values for amount of ^{235}U and enrichment.
			More Pressure	Based on qualitative assessment, it is highly unlikely for a process deviation to result in a more pressure condition that would cause an approach to the critical safe volume and to adversely affect the maintenance of margin to criticality associated with design and maximum operating parameter values for amount of ^{235}U and enrichment.
			Corrosion/ Erosion	Based on qualitative assessment, it is highly unlikely for a process deviation to result in a corrosion/erosion condition that would cause an approach to the critical safe volume. Materials are corrosion/erosion resistant and postulated complete wall erosion would not exceed the critical safe volume.
			Loss of Confinement or Leakage	Based on qualitative assessment, postulated loss of Chemical Absorber Oil Trap confinement or leakage will not result in any appreciable accumulation of ^{235}U material because of physical limitations of the process (sub-atmospheric). As a result, loss of confinement does not result in a potential for criticality and therefore its consequence is low.
			Fire	Components shall be protected from fire to ensure the critical design attribute of volume is not adversely impacted.
			Maintenance	Configuration Management shall ensure that maintenance does not adversely impact the critical design attribute of volume.
				Double Contingency Principle is satisfied as follows. The geometry is criticality safe and no single credible event or failure has been identified whereby the geometry could become unsafe. The enrichment is also controlled such that no single credible failure could result in loss of enrichment control.

Table 3.7-9 Product Blending System

Criticality Assessment of Passive Safe-By-Design Components				
Component Description (A)	**Sequence ID (B)**	**Critical Design Attribute (C)**	**Review of Up-Set Conditions to Change Geometry (Applicable HAZOP Guidewords) (D)**	**Notes/Comments (E)**
Oil Trap (Product Blending Evacuation)	LOSS OF SAFE-BY-DESIGN ATTRIBUTE	**DIAMETER** 24.4 cm (ID) Keff = 1.0 @ 6 wt %		Based on qualitative assessment, there is margin between the parameter values at normal operating conditions of Oil Trap diameter, amount of ^{235}U and enrichment and the conservative design/analysis values for these parameters assumed for criticality.
			More Heat	Based on qualitative assessment, it is highly unlikely for a process deviation to result in a more heat condition that would cause an approach to the critical safe diameter and to adversely affect the maintenance of margin to criticality associated with design and maximum operating parameter values for amount of ^{235}U and enrichment.
			More Pressure	Based on qualitative assessment, it is highly unlikely for a process deviation to result in a more pressure condition that would cause an approach to the critical safe diameter and to adversely affect the maintenance of margin to criticality associated with design and maximum operating parameter values for amount of ^{235}U and enrichment.
			Corrosion/ Erosion	Based on qualitative assessment, it is highly unlikely for a process deviation to result in a corrosion/erosion condition that would cause an approach to the critical safe diameter. Materials are corrosion/erosion resistant and postulated complete wall erosion would not exceed the critical safe diameter.
			Loss of Confinement or Leakage	Based on qualitative assessment, postulated loss of Oil Trap confinement or leakage will not result in any appreciable accumulation of ^{235}U material because of physical limitations of the process (sub-atmospheric). As a result, loss of confinement does not result in a potential for criticality and therefore its consequence is low.
			Fire	Components shall be protected from fire to ensure the critical design attribute of diameter is not adversely impacted.
			Maintenance	Configuration Management shall ensure that maintenance does not adversely impact the critical design attribute of diameter.
				Double Contingency Principle is satisfied as follows. The geometry is criticality safe and no single credible event or failure has been identified whereby the geometry could become unsafe. The enrichment is also controlled such that no single credible failure could result in loss of enrichment control.
Vacuum Cleaner	LOSS OF SAFE-BY-DESIGN ATTRIBUTE	**DIAMETER** 24.4 cm (ID) Keff = 1.0 @ 6 wt %		Based on qualitative assessment, there is margin between the parameter value at normal operating conditions of Vacuum Cleaner diameter and the conservative design/analysis value for this parameter assumed for criticality.
			More Heat	Based on qualitative assessment, it is highly unlikely for a process deviation to result in a more heat condition that would cause an approach to the critical safe diameter and to adversely affect the maintenance of margin to criticality associated with design and maximum operating parameter value.

Table 3.7-9 Product Blending System

Criticality Assessment of Passive Safe-By-Design Components				
Component Description (A)	**Sequence ID (B)**	**Critical Design Attribute (C)**	**Review of Up-Set Conditions to Change Geometry (Applicable HAZOP Guidewords) (D)**	**Notes/Comments (E)**
			More Pressure	Based on qualitative assessment, it is highly unlikely for a process deviation to result in a more pressure condition that would cause an approach to the critical safe diameter and to adversely affect the maintenance of margin to criticality associated with design and maximum operating parameter value.
			Corrosion/ Erosion	Based on qualitative assessment, it is highly unlikely for a process deviation to result in a corrosion/erosion condition that would cause an approach to the critical safe diameter. Materials are corrosion/erosion resistant and postulated complete wall erosion would not exceed the critical safe diameter.
			Loss of Confinement or Leakage	Based on qualitative assessment, postulated loss of Vacuum Cleaner confinement or leakage will not result in any appreciable accumulation of ^{235}U. As a result, loss of confinement does not result in a potential for criticality and therefore its consequence is low.
			Fire	Components shall be protected from fire to ensure the critical design attribute of diameter is not adversely impacted.
			Maintenance	Configuration Management shall ensure that maintenance does not adversely impact the critical design attribute of diameter.
			Impact/Drop	Components shall be protected from Impact/Drop to ensure the critical design attribute of diameter is not adversely impacted.
			External Events (Construction on Site)	Components shall be protected from Construction on Site to ensure the critical design attribute of diameter is not adversely impacted.
			External Events (Failure of Above-Ground Liquid Tanks)	Components shall be protected from Failure of Above-Ground Liquid Tanks to ensure the critical design attribute of diameter is not adversely impacted.
			External Events (Seismic)	Components shall be protected from Seismic events to ensure the critical design attribute of diameter is not adversely impacted.
			External Events (Tornado)	Components shall be protected from Tornado events to ensure the critical design attribute of diameter is not adversely impacted.
				Double Contingency Principle is satisfied as follows. The geometry is criticality safe and no single credible event or failure has been identified whereby the geometry could become unsafe. The enrichment is also controlled such that no single credible failure could result in loss of enrichment control.

Table 3.7-9 Product Blending System

Criticality Assessment of Passive Safe-By-Design Components				
Component Description (A)	**Sequence ID (B)**	**Critical Design Attribute (C)**	**Review of Up-Set Conditions to Change Geometry (Applicable HAZOP Guidewords) (D)**	**Notes/Comments (E)**
Product Blending Evacuation Pump/ Chemical Trap Set	LOSS OF SAFE-BY-DESIGN ATTRIBUTE	**PHYSICAL ARRANGEMENT**		Based on qualitative assessment, there is margin between the normal operating conditions and the conservative design/analysis conditions assumed for criticality.
			More Heat	Based on qualitative assessment, it is highly unlikely for a process deviation to result in a more heat condition that would adversely affect the maintenance of margin to criticality associated with design and maximum operating parameter values for amount of ^{235}U and enrichment.
			More Pressure	Based on qualitative assessment, it is highly unlikely for a process deviation to result in a more pressure condition that would adversely affect the maintenance of margin to criticality associated with design and maximum operating parameter values for amount of ^{235}U and enrichment.
			Corrosion/ Erosion	Based on qualitative assessment, it is highly unlikely for a process deviation to result in a corrosion/erosion condition that would affect the maintenance of margin to criticality associated with design and maximum operating parameter values for physical arrangement.
			Loss of Confinement or Leakage	Based on qualitative assessment, postulated loss of Product Blending Evacuation Pump/ Chemical Trap Set confinement or leakage will not result in any appreciable accumulation of ^{235}U material because of physical limitations of the process (sub-atmospheric). As a result, loss of confinement does not result in a potential for criticality and therefore its consequence is low.
			Fire	Components shall be protected from fire to ensure the critical design attribute of physical arrangement is not adversely impacted.
			Maintenance	Configuration Management shall ensure that maintenance does not adversely impact the critical design attribute of physical arrangement.
			Impact/Drop	Components shall be protected from impact/drop to ensure the critical design attribute of physical arrangement is not adversely impacted.
			External Events (Construction on Site)	Components shall be protected from construction on-Site to ensure the critical design attribute of physical arrangement is not adversely impacted.
			External Events (Failure of Above-Ground Liquid Storage Tanks)	Components shall be protected from external flooding (Failure of Above-Ground Liquid Storage Tanks) to ensure the critical design attribute of physical arrangement is not adversely impacted.
			External Events (External Fire)	Components shall be protected from external fire events to ensure the critical design attribute of physical arrangement is not adversely impacted.

Table 3.7-9 Product Blending System

Criticality Assessment of Passive Safe-By-Design Components				
Component Description (A)	**Sequence ID (B)**	**Critical Design Attribute (C)**	**Review of Up-Set Conditions to Change Geometry (Applicable HAZOP Guidewords) (D)**	**Notes/Comments (E)**
				Double Contingency Principle is satisfied as follows. The geometry is criticality safe and no single credible event or failure has been identified whereby the geometry could become unsafe. The enrichment is also controlled such that no single credible failure could result in loss of enrichment control.
Pump Transport Device	LOSS OF SAFE-BY-DESIGN ATTRIBUTE	**PHYSICAL ARRANGEMENT**		Based on qualitative assessment, there is margin between the normal operating conditions and the conservative design/analysis conditions assumed for criticality.
			Corrosion/ Erosion	Based on qualitative assessment, it is highly unlikely for a process deviation to result in a corrosion/erosion condition that would affect the maintenance of margin to criticality associated with design and maximum operating parameter values for physical arrangement.
			Fire	Components shall be protected from fire to ensure the critical design attribute of physical arrangement is not adversely impacted.
			Maintenance	Configuration Management shall ensure that maintenance does not adversely impact the critical design attribute of physical arrangement.
			Impact/Drop	Components shall be protected from impact/drop to ensure the critical design attribute of physical arrangement is not adversely impacted.
			External Events (Construction on Site)	Components shall be protected from construction on-Site to ensure the critical design attribute of physical arrangement is not adversely impacted.
			External Events (Failure of Above-Ground Liquid Storage Tanks)	Components shall be protected from external flooding (Failure of Above-Ground Liquid Storage Tanks) to ensure the critical design attribute of physical arrangement is not adversely impacted.
			External Events (External Fire)	Components shall be protected from external fire events to ensure the critical design attribute of physical arrangement is not adversely impacted.
				Double Contingency Principle is satisfied as follows. The geometry is criticality safe and no single credible event or failure has been identified whereby the geometry could become unsafe. The enrichment is also controlled such that no single credible failure could result in loss of enrichment control.
Chemical Trap Transport Device	LOSS OF SAFE-BY-DESIGN ATTRIBUTE	**PHYSICAL ARRANGEMENT**		Based on qualitative assessment, there is margin between the normal operating conditions and the conservative design/analysis conditions assumed for criticality.
			Corrosion/ Erosion	Based on qualitative assessment, it is highly unlikely for a process deviation to result in a corrosion/erosion condition that would affect the maintenance of margin to criticality associated with design and maximum operating parameter values for physical arrangement.

Table 3.7-9 Product Blending System

Criticality Assessment of Passive Safe-By-Design Components				
Component Description (A)	**Sequence ID (B)**	**Critical Design Attribute (C)**	**Review of Up-Set Conditions to Change Geometry (Applicable HAZOP Guidewords) (D)**	**Notes/Comments (E)**
			Fire	Components shall be protected from fire to ensure the critical design attribute of physical arrangement is not adversely impacted.
			Maintenance	Configuration Management shall ensure that maintenance does not adversely impact the critical design attribute of physical arrangement.
			Impact/Drop	Components shall be protected from impact/drop to ensure the critical design attribute of physical arrangement is not adversely impacted.
			External Events (Construction on Site)	Components shall be protected from construction on-Site to ensure the critical design attribute of physical arrangement is not adversely impacted.
			External Events (Failure of Above-Ground Liquid Storage Tanks)	Components shall be protected from external flooding (Failure of Above-Ground Liquid Storage Tanks) to ensure the critical design attribute of physical arrangement is not adversely impacted.
			External Events (External Fire)	Components shall be protected from external fire events to ensure the critical design attribute of physical arrangement is not adversely impacted.
				Double Contingency Principle is satisfied as follows. The geometry is criticality safe and no single credible event or failure has been identified whereby the geometry could become unsafe. The enrichment is also controlled such that no single credible failure could result in loss of enrichment control.
Mobile UF_6 Rig	LOSS OF SAFE-BY-DESIGN ATTRIBUTE	**PHYSICAL ARRANGEMENT**		Based on qualitative assessment, there is margin between the normal operating conditions and the conservative design/analysis conditions assumed for criticality.
			More Heat	Based on qualitative assessment, it is highly unlikely for a process deviation to result in a more heat condition that would adversely affect the maintenance of margin to criticality associated with design and maximum operating parameter values for amount of ^{235}U and enrichment.
			More Pressure	Based on qualitative assessment, it is highly unlikely for a process deviation to result in a more pressure condition that would adversely affect the maintenance of margin to criticality associated with design and maximum operating parameter values for amount of ^{235}U and enrichment.
			Corrosion/ Erosion	Based on qualitative assessment, it is highly unlikely for a process deviation to result in a corrosion/erosion condition that would affect the maintenance of margin to criticality associated with design and maximum operating parameter values for physical arrangement.
			Loss of Confinement or Leakage	Based on qualitative assessment, postulated loss of Mobile UF_6 Rig confinement or leakage will not result in any appreciable accumulation of ^{235}U material because of physical limitations of the process (sub-atmospheric). As a result, loss of confinement does not result in a potential for criticality and therefore its consequence is low.

Table 3.7-9 Product Blending System

Criticality Assessment of Passive Safe-By-Design Components				
Component Description (A)	**Sequence ID (B)**	**Critical Design Attribute (C)**	**Review of Up-Set Conditions to Change Geometry (Applicable HAZOP Guidewords) (D)**	**Notes/Comments (E)**
			Fire	Components shall be protected from fire to ensure the critical design attribute of physical arrangement is not adversely impacted.
			Maintenance	Configuration Management shall ensure that maintenance does not adversely impact the critical design attribute of physical arrangement.
			Impact/Drop	Components shall be protected from impact/drop to ensure the critical design attribute of physical arrangement is not adversely impacted.
			External Events (Construction on Site)	Components shall be protected from construction on-Site to ensure the critical design attribute of physical arrangement is not adversely impacted.
			External Events (Failure of Above-Ground Liquid Storage Tanks)	Components shall be protected from external flooding (Failure of Above-Ground Liquid Storage Tanks) to ensure the critical design attribute of physical arrangement is not adversely impacted.
			External Events (External Fire)	Components shall be protected from external fire events to ensure the critical design attribute of physical arrangement is not adversely impacted.
				Double Contingency Principle is satisfied as follows. The geometry is criticality safe and no single credible event or failure has been identified whereby the geometry could become unsafe. The enrichment is also controlled such that no single credible failure could result in loss of enrichment control.
1S Sample Bottle	LOSS OF SAFE-BY-DESIGN ATTRIBUTE	**DIAMETER** 24.4 cm (ID) Keff = 1.0 @ 6 wt %		Based on qualitative assessment, there is margin between the parameter values at normal operating conditions of 1S Sample Bottle diameter, amount of ^{235}U and enrichment and the conservative design/analysis values for these parameters assumed for criticality.
			More Heat	Based on qualitative assessment, it is highly unlikely for a process deviation to result in a more heat condition that would cause an approach to the critical safe diameter and to adversely affect the maintenance of margin to criticality associated with design and maximum operating parameter values for amount of ^{235}U and enrichment.
			More Pressure	Based on qualitative assessment, it is highly unlikely for a process deviation to result in a more pressure condition that would cause an approach to the critical safe diameter and to adversely affect the maintenance of margin to criticality associated with design and maximum operating parameter values for amount of ^{235}U and enrichment.
			Corrosion/ Erosion	Based on qualitative assessment, it is highly unlikely for a process deviation to result in a corrosion/erosion condition that would cause an approach to the critical safe diameter. Materials are corrosion/erosion resistant and postulated complete wall erosion would not exceed the critical safe diameter.

Table 3.7-9 Product Blending System

Criticality Assessment of Passive Safe-By-Design Components				
Component Description (A)	**Sequence ID (B)**	**Critical Design Attribute (C)**	**Review of Up-Set Conditions to Change Geometry (Applicable HAZOP Guidewords) (D)**	**Notes/Comments (E)**
			Loss of Confinement or Leakage	Based on qualitative assessment, postulated loss of 1S Sample Bottle confinement or leakage will not result in any appreciable accumulation of ^{235}U material because of physical limitations of the process (sub-atmospheric). As a result, loss of confinement does not result in a potential for criticality and therefore its consequence is low.
			Fire	Components shall be protected from fire to ensure the critical design attribute of diameter is not adversely impacted.
			Maintenance	Configuration Management shall ensure that maintenance does not adversely impact the critical design attribute of diameter.
				Double Contingency Principle is satisfied as follows. The geometry is criticality safe and no single credible event or failure has been identified whereby the geometry could become unsafe. The enrichment is also controlled such that no single credible failure could result in loss of enrichment control.

Column Descriptions:

Column A: This column provides a brief description of each component.

Column B: This column identifies the accident sequence associated with the passive component.

Column C: This column identifies the critical design attribute under consideration along with the conservative values used in the criticality analysis.

Column D: This column identifies the applicable guidewords from the ISA HAZOP procedure that are used to assess the criticality design margin. Additional guidewords are addressed as applicable in the detailed assessment.

Column E: This column provides any notes, comments and concluding statements.

Table 3.7-10 Product Liquid Sampling

Criticality Assessment of Passive Safe-By-Design Components				
Component Description (A)	**Sequence ID (B)**	**Critical Design Attribute (C)**	**Review of Up-Set Conditions to Change Geometry (Applicable HAZOP Guidewords) (D)**	**Notes/Comments (E)**
Product Liquid Sampling Piping (largest pipe ID in the system)	LOSS OF SAFE-BY-DESIGN ATTRIBUTE	DIAMETER 24.4 cm (ID) Keff = 1.0 @ 6 wt %		Based on qualitative assessment, there is margin between the parameter values at normal operating conditions of pipe diameter, amount of ^{235}U and enrichment and the conservative design/analysis values for these parameters assumed for criticality.
			More Heat	Based on qualitative assessment, it is highly unlikely for a process deviation to result in a more heat condition that would cause an approach to the critical safe diameter and to adversely affect the maintenance of margin to criticality associated with design and maximum operating parameter values for amount of ^{235}U and enrichment.
			More Pressure	Based on qualitative assessment, it is highly unlikely for a process deviation to result in a more pressure condition that would cause an approach to the critical safe diameter and to adversely affect the maintenance of margin to criticality associated with design and maximum operating parameter values for amount of ^{235}U and enrichment.
			Corrosion/ Erosion	Based on qualitative assessment, it is highly unlikely for a process deviation to result in a corrosion/erosion condition that would cause an approach to the critical safe diameter. Materials are corrosion/erosion resistant and postulated complete wall erosion would not exceed the critical safe diameter.
			Loss of Confinement or Leakage	Based on qualitative assessment, postulated loss of piping system confinement or leakage will not result in any appreciable accumulation of ^{235}U material because of physical limitations of the process (sub-atmospheric). As a result, loss of confinement does not result in a potential for criticality and therefore its consequence is low.
			Fire	Components shall be protected from fire to ensure the critical design attribute of diameter is not adversely impacted.
			Maintenance	Configuration Management shall ensure that maintenance does not adversely impact the critical design attribute of diameter.
				Double Contingency Principle is satisfied as follows. The geometry is criticality safe and no single credible event or failure has been identified whereby the geometry could become unsafe. The enrichment is also controlled such that no single credible failure could result in loss of enrichment control.
Product Liquid Sampling Piping Arrangement	LOSS OF SAFE-BY-DESIGN ATTRIBUTE	**PHYSICAL ARRANGEMENT**		Based on qualitative assessment, there is margin between the normal operating conditions and the conservative design/analysis conditions assumed for criticality.
			More Heat	Based on qualitative assessment, it is highly unlikely for a process deviation to result in a more heat condition that would adversely affect the maintenance of margin to criticality associated with design and maximum operating parameter values for amount of ^{235}U and enrichment.

Table 3.7-10 Product Liquid Sampling

Criticality Assessment of Passive Safe-By-Design Components				
Component Description (A)	**Sequence ID (B)**	**Critical Design Attribute (C)**	**Review of Up-Set Conditions to Change Geometry (Applicable HAZOP Guidewords) (D)**	**Notes/Comments (E)**
			More Pressure	Based on qualitative assessment, it is highly unlikely for a process deviation to result in a more pressure condition that would adversely affect the maintenance of margin to criticality associated with design and maximum operating parameter values for amount of ^{235}U and enrichment.
			Corrosion/ Erosion	Based on qualitative assessment, it is highly unlikely for a process deviation to result in a corrosion/erosion condition that would affect the maintenance of margin to criticality associated with design and maximum operating parameter values for physical arrangement.
			Loss of Confinement or Leakage	Based on qualitative assessment, postulated loss of piping system confinement or leakage will not result in any appreciable accumulation of ^{235}U material because of physical limitations of the process (sub-atmospheric). As a result, loss of confinement does not result in a potential for criticality and therefore its consequence is low.
			Fire	Components shall be protected from fire to ensure the critical design attribute of physical arrangement is not adversely impacted.
			Maintenance	Configuration Management shall ensure that maintenance does not adversely impact the critical design attribute of physical arrangement.
			Impact/Drop	Components shall be protected from impact/drop to ensure the critical design attribute of physical arrangement is not adversely impacted.
			External Events (Construction on Site)	Components shall be protected from construction on-Site to ensure the critical design attribute of physical arrangement is not adversely impacted.
			External Events (Failure of Above-Ground Liquid Storage Tanks)	Components shall be protected from external flooding (Failure of Above-Ground Liquid Storage Tanks) to ensure the critical design attribute of physical arrangement is not adversely impacted.
			External Events (External Fire)	Components shall be protected from external fire events to ensure the critical design attribute of physical arrangement is not adversely impacted.
				Double Contingency Principle is satisfied as follows. The geometry is criticality safe and no single credible event or failure has been identified whereby the geometry could become unsafe. The enrichment is also controlled such that no single credible failure could result in loss of enrichment control.

Table 3.7-10 Product Liquid Sampling

Criticality Assessment of Passive Safe-By-Design Components				
Component Description (A)	**Sequence ID (B)**	**Critical Design Attribute (C)**	**Review of Up-Set Conditions to Change Geometry (Applicable HAZOP Guidewords) (D)**	**Notes/Comments (E)**
Vacuum Cleaner	LOSS OF SAFE-BY-DESIGN ATTRIBUTE	**DIAMETER** 24.4 cm (ID) Keff = 1.0 @ 6 wt %		Based on qualitative assessment, there is margin between the parameter value at normal operating conditions of Vacuum Cleaner diameter and the conservative design/analysis value for this parameter assumed for criticality.
			More Heat	Based on qualitative assessment, it is highly unlikely for a process deviation to result in a more heat condition that would cause an approach to the critical safe diameter and to adversely affect the maintenance of margin to criticality associated with design and maximum operating parameter value.
			More Pressure	Based on qualitative assessment, it is highly unlikely for a process deviation to result in a more pressure condition that would cause an approach to the critical safe diameter and to adversely affect the maintenance of margin to criticality associated with design and maximum operating parameter value.
			Corrosion/ Erosion	Based on qualitative assessment, it is highly unlikely for a process deviation to result in a corrosion/erosion condition that would cause an approach to the critical safe diameter. Materials are corrosion/erosion resistant and postulated complete wall erosion would not exceed the critical safe diameter.
			Loss of Confinement or Leakage	Based on qualitative assessment, postulated loss of Vacuum Cleaner confinement or leakage will not result in any appreciable accumulation of ^{235}U. As a result, loss of confinement does not result in a potential for criticality and therefore its consequence is low.
			Fire	Components shall be protected from fire to ensure the critical design attribute of diameter is not adversely impacted.
			Maintenance	Configuration Management shall ensure that maintenance does not adversely impact the critical design attribute of diameter.
			Impact/Drop	Components shall be protected from Impact/Drop to ensure the critical design attribute of diameter is not adversely impacted.
			External Events (Construction on Site)	Components shall be protected from Construction on Site to ensure the critical design attribute of diameter is not adversely impacted.
			External Events (Failure of Above-Ground Liquid Tanks)	Components shall be protected from Failure of Above-Ground Liquid Tanks to ensure the critical design attribute of diameter is not adversely impacted.
				Double Contingency Principle is satisfied as follows. The geometry is criticality safe and no single credible event or failure has been identified whereby the geometry could become unsafe. The enrichment is also controlled such that no single credible failure could result in loss of enrichment control.

Table 3.7-10 Product Liquid Sampling

Criticality Assessment of Passive Safe-By-Design Components				
Component Description (A)	**Sequence ID (B)**	**Critical Design Attribute (C)**	**Review of Up-Set Conditions to Change Geometry (Applicable HAZOP Guidewords) (D)**	**Notes/Comments (E)**
Mobile UF_6 Rig	LOSS OF SAFE-BY-DESIGN ATTRIBUTE	**PHYSICAL ARRANGEMENT**		Based on qualitative assessment, there is margin between the normal operating conditions and the conservative design/analysis conditions assumed for criticality.
			More Heat	Based on qualitative assessment, it is highly unlikely for a process deviation to result in a more heat condition that would adversely affect the maintenance of margin to criticality associated with design and maximum operating parameter values for amount of ^{235}U and enrichment.
			More Pressure	Based on qualitative assessment, it is highly unlikely for a process deviation to result in a more pressure condition that would adversely affect the maintenance of margin to criticality associated with design and maximum operating parameter values for amount of ^{235}U and enrichment.
			Corrosion/ Erosion	Based on qualitative assessment, it is highly unlikely for a process deviation to result in a corrosion/erosion condition that would affect the maintenance of margin to criticality associated with design and maximum operating parameter values for amount of ^{235}U and enrichment.
			Loss of Confinement or Leakage	Based on qualitative assessment, postulated loss of Mobile UF_6 Rig confinement or leakage will not result in any appreciable accumulation of ^{235}U material because of physical limitations of the process (sub-atmospheric). As a result, loss of confinement does not result in a potential for criticality and therefore its consequence is low.
			Fire	Components shall be protected from fire to ensure the critical design attribute of physical arrangement is not adversely impacted.
			Maintenance	Configuration Management shall ensure that maintenance does not adversely impact the critical design attribute of physical arrangement.
			Impact/Drop	Components shall be protected from impact/drop to ensure the critical design attribute of physical arrangement is not adversely impacted.
			External Events (Construction on Site)	Components shall be protected from construction on-Site to ensure the critical design attribute of physical arrangement is not adversely impacted.
			External Events (Failure of Above-Ground Liquid Storage Tanks)	Components shall be protected from external flooding (Failure of Above-Ground Liquid Storage Tanks) to ensure the critical design attribute of physical arrangement is not adversely impacted.
			External Events (External Fire)	Components shall be protected from external fire events to ensure the critical design attribute of physical arrangement is not adversely impacted.
				Double Contingency Principle is satisfied as follows. The geometry is criticality safe and no single credible event or failure has been identified whereby the geometry could become unsafe. The enrichment is also controlled such that no single credible failure could result in loss of enrichment control.

Table 3.7-10 Product Liquid Sampling

Criticality Assessment of Passive Safe-By-Design Components				
Component Description (A)	**Sequence ID (B)**	**Critical Design Attribute (C)**	**Review of Up-Set Conditions to Change Geometry (Applicable HAZOP Guidewords) (D)**	**Notes/Comments (E)**
1S Sample Bottle	LOSS OF SAFE-BY-DESIGN ATTRIBUTE	**DIAMETER** 24.4 cm (ID) Keff = 1.0 @ 6 wt %		Based on qualitative assessment, there is margin between the parameter values at normal operating conditions of pipe diameter, amount of ^{235}U and enrichment and the conservative design/analysis values for these parameters assumed for criticality.
			More Heat	Based on qualitative assessment, it is highly unlikely for a process deviation to result in a more heat condition that would cause an approach to the critical safe diameter and to adversely affect the maintenance of margin to criticality associated with design and maximum operating parameter values for amount of ^{235}U and enrichment.
			More Pressure	Based on qualitative assessment, it is highly unlikely for a process deviation to result in a more pressure condition that would cause an approach to the critical safe diameter and to adversely affect the maintenance of margin to criticality associated with design and maximum operating parameter values for amount of ^{235}U and enrichment.
			Corrosion/ Erosion	Based on qualitative assessment, it is highly unlikely for a process deviation to result in a corrosion/erosion condition that would cause an approach to the critical safe diameter. Materials are corrosion/erosion resistant and postulated complete wall erosion would not exceed the critical safe diameter.
			Loss of Confinement or Leakage	Based on qualitative assessment, postulated loss of 1S Sample Bottle confinement or leakage will not result in any appreciable accumulation of ^{235}U material because of physical limitations of the process (sub-atmospheric). As a result, loss of confinement does not result in a potential for criticality and therefore its consequence is low.
			Fire	Components shall be protected from fire to ensure the critical design attribute of diameter is not adversely impacted.
			Maintenance	Configuration Management shall ensure that maintenance does not adversely impact the critical design attribute of diameter.
				Double Contingency Principle is satisfied as follows. The geometry is criticality safe and no single credible event or failure has been identified whereby the geometry could become unsafe. The enrichment is also controlled such that no single credible failure could result in loss of enrichment control.

Column Descriptions:

Column A: This column provides a brief description of each component.

Column B: This column identifies the accident sequence associated with the passive component.

Column C: This column identifies the critical design attribute under consideration along with the conservative values used in the criticality analysis.

Column D: This column identifies the applicable guidewords from the ISA HAZOP procedure that are used to assess the criticality design margin. Additional guidewords are addressed as applicable in the detailed assessment.

Column E: This column provides any notes, comments and concluding statements.

Table 3.7-11 Contingency Dump System

Criticality Assessment of Passive Safe-By-Design Components – ETC4009567				
Component Description (A)	**Sequence ID (B)**	**Safe Design Attribute $k_{eff} < 0.95$ @ 6 wt % (unless physical arrangement) (Design Value, See Note) (C)**	**Review of Up-Set Conditions to Change Geometry (Applicable HAZOP Guidewords) (D)**	**Notes/Comments (E)**
Contingency Dump Piping (largest pipe in the system)	LOSS OF SAFE-BY-DESIGN ATTRIBUTE	DIAMETER 22.4 cm		Based on qualitative assessment, there is margin between the parameter values at normal operating conditions of pipe diameter, amount of U^{235} and enrichment and the conservative design analysis values for these parameters assumed for criticality.
Contingency Dump Piping Arrangement (System 440)	LOSS OF SAFE-BY-DESIGN ATTRIBUTE	PHYSICAL ARRNGMNT See CDS Drawings & Crit. Calc		Based on qualitative assessment, there is margin between the normal operating conditions and the conservative design analysis conditions assumed for criticality.
Contingency Dump NaF Traps	LOSS OF SAFE-BY-DESIGN ATTRIBUTE	PHYSICAL ARRNGMNT See Crit. Calc		Based on qualitative assessment, there is margin between the parameter values at normal operating conditions of NaF Trap arrangement, amount of U^{235} and enrichment and the conservative design/analysis values for these parameters assumed for criticality.
Contingency Dump Buffer Volume Arrangement	LOSS OF SAFE-BY-DESIGN ATTRIBUTE	PHYSICAL ARRNGMNT See CDS Drawings & Crit. Calc		Based on qualitative assessment, there is margin between the normal operating conditions and the conservative design/analysis conditions assumed for criticality.

Table 3.7-11 Contingency Dump System

Criticality Assessment of Passive Safe-By-Design Components – ETC4009567				
Component Description (A)	**Sequence ID (B)**	**Safe Design Attribute $k_{eff} < 0.95$ @ 6 wt % (unless physical arrangement) (Design Value, See Note) (C)**	**Review of Up-Set Conditions to Change Geometry (Applicable HAZOP Guidewords) (D)**	**Notes/Comments (E)**
Mixed Bed (Al_2O_3 & C) Type-A Trap (Contingency Dump Vacuum Pump & Trap Set)	LOSS OF SAFE BY DESIGN ATTRIBUTE	DIAMETER 22.4cm		Based on qualitative assessment, there is margin between the parameter values at normal operating conditions of Mixed Bed Trap diameter, amount of U^{235} and enrichment and the conservative design/analysis values for these parameters assumed for criticality.
Al_2O_3 Adsorption Oil Filter (Contingency Dump Pump & Trap Set)	LOSS OF SAFE BY DESIGN ATTRIBUTE	VOLUME 19.3 liters		Based on qualitative assessment, there is margin between the parameter values at normal operating conditions of Al_2O_3 Oil Filter volume, amount of U^{235} and enrichment and the conservative design/analysis values for these parameters assumed for criticality.
ARS40-65 Exhaust Oil Filter (Contingency Dump Pump & Trap Set)	LOSS OF SAFE BY DESIGN ATTRIBUTE	VOLUME 19.3 liters		Based on qualitative assessment, there is margin between the parameter values at normal operating conditions of Exhaust Oil Filter volume, amount of U^{235} and enrichment and the conservative design/analysis values for these parameters assumed for criticality.
D40-BCS Rotary Vane Pump (Contingency Dump Pump & Trap Set)	LOSS OF SAFE BY DESIGN ATTRIBUTE	VOLUME 19.3 liters		Based on qualitative assessment, there is margin between the parameter values at normal operating conditions of Rotary Vane Pump volume, amount of U^{235} and enrichment and the conservative design/analysis values for these parameters assumed for criticality.

Table 3.7-11 Contingency Dump System

Criticality Assessment of Passive Safe-By-Design Components – ETC4009567				
Component Description (A)	**Sequence ID (B)**	**Safe Design Attribute k_{eff} < 0.95 @ 6 wt % (unless physical arrangement) (Design Value, See Note) (C)**	**Review of Up-Set Conditions to Change Geometry (Applicable HAZOP Guidewords) (D)**	**Notes/Comments (E)**
WSU251 Roots Pump (Contingency Dump Pump & Trap Set)	LOSS OF SAFE BY DESIGN ATTRIBUTE	VOLUME 19.3 liters		Based on qualitative assessment, there is margin between the normal operating conditions and the conservative design/analysis conditions assumed for criticality.
Contingency Dump Pump & Trap Set	LOSS OF SAFE BY DESIGN ATTRIBUTE	PHYSICAL ARRNGMNT Bounded by Product Pump & Trap Set		Based on qualitative assessment, there is margin between the normal operating conditions and the conservative design/analysis conditions assumed for criticality.
Cold Trap (K300) (Mobile Maint'nce Rig)	LOSS OF SAFE BY DESIGN ATTRIBUTE	DIAMETER 22.4 cm		Based on qualitative assessment, there is margin between the parameter values at normal operating conditions of Mixed Bed Trap diameter, amount of U^{235} and enrichment and the conservative design/analysis values for these parameters assumed for criticality
Mixed Bed (Al_2O_3 & C) Type-A Trap (Mobile Maint'nce Rig)	LOSS OF SAFE BY DESIGN ATTRIBUTE	DIAMETER 22.4 cm		Based on qualitative assessment, there is margin between the parameter values at normal operating conditions of AL_2O_3 Oil Filter volume, amount of U^{235} and enrichment and the conservative design/analysis values for these parameters assumed for criticality
AL_2O_3 Adsorption oil Filter (Mobile Maint'nce Rig)	LOSS OF SAFE BY DESIGN ATTRIBUTE	VOLUME 19.3 liters		Based on qualitative assessment, there is margin between the parameter values at normal operating conditions of Exhaust Oil Filter volume, amount of U^{235} and enrichment and the conservative design/analysis values for these parameters assumed for criticality

Table 3.7-11 Contingency Dump System

Criticality Assessment of Passive Safe-By-Design Components – ETC4009567				
Component Description (A)	**Sequence ID (B)**	**Safe Design Attribute k_{eff} < 0.95 @ 6 wt % (unless physical arrangement) (Design Value, See Note) (C)**	**Review of Up-Set Conditions to Change Geometry (Applicable HAZOP Guidewords) (D)**	**Notes/Comments (E)**
ARS40-65 Exhaust Oil Filter (Mobile Maint'nce Rig)	LOSS OF SAFE BY DESIGN ATTRIBUTE	VOLUME 19.3 liters		Based on qualitative assessment, there is margin between the parameter values at normal operating conditions of component diameter, amount of U^{235} and enrichment and the conservative design/analysis values for these parameters assumed for criticality
D40-BCS Rotary Vane Pump (Mobile Maint'nce Rig)	LOSS OF SAFE BY DESIGN ATTRIBUTE	VOLUME 19.3 liters		Based on qualitative assessment, there is margin between the parameter values at normal operating conditions of Rotary Vane Pump volume, amount of U^{235} and enrichment and the conservative design/analysis values for these parameters assumed for criticality
WSU251 Roots Pump (Mobile Maint'nce Rig)	LOSS OF SAFE BY DESIGN ATTRIBUTE	VOLUME 19.3 liters		Based on qualitative assessment, there is margin between the normal operating conditions and the conservative design/analysis conditions assumed for criticality
Mobile Maint'nce Rig	LOSS OF SAFE BY DESIGN ATTRIBUTE	PHYSICAL ARRNGMNT See Crit. Calc		Based on qualitative assessment, there is margin between the normal operating conditions and the conservative design/analysis conditions assumed for criticality
Upset Conditions				
All			More Heat	Based on qualitative assessment, it is highly unlikely for a process deviation to result in a more heat condition that would adversely affect the maintenance of margin to criticality associated with design and maximum operating parameter values for amount of ^{235}U and enrichment.

Table 3.7-11 Contingency Dump System

Criticality Assessment of Passive Safe-By-Design Components – ETC4009567				
Component Description (A)	**Sequence ID (B)**	**Safe Design Attribute $k_{eff} < 0.95$ @ 6 wt % (unless physical arrangement) (Design Value, See Note) (C)**	**Review of Up-Set Conditions to Change Geometry (Applicable HAZOP Guidewords) (D)**	**Notes/Comments (E)**
All			More Pressure	Based on qualitative assessment, it is highly unlikely for a process deviation to result in a more pressure condition that would adversely affect the maintenance of margin to criticality associated with design and maximum operating parameter values for amount of ^{235}U and enrichment.
All			Corrosion/Erosion	Based on qualitative assessment, it is highly unlikely for a process deviation to result in a corrosion/erosion condition that would affect the maintenance of margin to criticality associated with design and maximum operating parameter values for physical arrangement.
All			Loss of Confinement or Leakage	Based on qualitative assessment, postulated loss of confinement or leakage will not result in any appreciable accumulation of ^{235}U material because of physical limitations of the process (sub-atmospheric). As a result, loss of confinement does not result in a potential for criticality and therefore its consequence is low.
All			Fire	Components are protected from fire to ensure the safe design attribute of physical arrangement is not adversely impacted. The application of IROFS36a and its implementing procedure provides control of transient combustibles, limiting the fire magnitude and location in areas containing uranic material.
All			Maintenance	Approved maintenance procedures will be used to ensure that maintenance does not adversely impact the safe design attribute of physical arrangement. Maintenance is part of the generic management measures as described in Section 3.1.8.3 of the ISA Summary.

Table 3.7-11 Contingency Dump System

Criticality Assessment of Passive Safe-By-Design Components – ETC4009567				
Component Description (A)	**Sequence ID (B)**	**Safe Design Attribute k_{eff} < 0.95 @ 6 wt % (unless physical arrangement) (Design Value, See Note) (C)**	**Review of Up-Set Conditions to Change Geometry (Applicable HAZOP Guidewords) (D)**	**Notes/Comments (E)**
SBD Components by Physical Arrangement			Impact/Drop	Components are protected from impact/drop where necessary to ensure the safe design attribute of physical arrangement is not adversely impacted. Seismic II/I design criteria apply to support and anchorages of SBD components whose as-designed, safe configuration must be maintained during a design basis earthquake (DBE). Meeting these criteria provides protection from impact/drop due to a bounding event (i.e., DBE).
SBD Components by Physical Arrangement			External Events (Construction on Site)	Bounded by the seismic, tornado missile or impact/drop event in accordance with the ISA Meeting Minutes on Operate While Constructing.
SBD Components by Physical Arrangement			External Events (Failure of Above-Ground Liquid Storage Tanks)	Criticality due to this event is not credible, as it is bounded by local intense precipitation and protection from floods is no longer required as a result of LAR-08-07 approved by NRC SER (NRC, 2009).
SBD Components by Physical Arrangement			External Events (Hurricane)	Not a design basis event for the NEF site due to its distance from the coast (ISA Summary, Section 3.2.3.4.3)
SBD Components by Physical Arrangement			External Events (Seismic)	Components are protected from seismic events where necessary to ensure the safe design attribute of physical arrangement is not adversely impacted. Unless specifically exempted by a nuclear criticality safety evaluation or analysis, SBD components and piping require seismic design to ensure that minimum spacing requirements are maintained in the event of a DBE or damage from a nearby II/I structure, system or component.
SBD Components by Physical Arrangement			External Events (Tornado)	Components are protected from tornado events with the application of IROFS27e to prevent building collapse to ensure the safe design attribute of physical arrangement is not adversely impacted.

Table 3.7-11 Contingency Dump System

Criticality Assessment of Passive Safe-By-Design Components – ETC4009567				
Component Description (A)	**Sequence ID (B)**	**Safe Design Attribute $k_{eff} < 0.95$ @ 6 wt % (unless physical arrangement) (Design Value, See Note) (C)**	**Review of Up-Set Conditions to Change Geometry (Applicable HAZOP Guidewords) (D)**	**Notes/Comments (E)**
SBD Components by Physical Arrangement			External Events (Tornado Missile)	Components are protected from tornado missile events where necessary to ensure the safe design attribute of physical arrangement is not adversely impacted. Unless specifically exempted by a nuclear criticality safety evaluation or analysis, SBD components and piping require tornado missile protection to ensure that minimum spacing requirements are maintained during a tornado event.
SBD Components by Physical Arrangement			External Events (Local Intense Precipitation)	Criticality due to this event is not credible as a result of LAR-08-07 approved by NRC SER (NRC, 2009). Components are protected from local intense precipitation with the application of IROFS27e to prevent building collapse to ensure the safe design attribute of physical arrangement is not adversely impacted. IROFS27e does not prevent water intrusion. Flooding is included in nuclear criticality safety evaluations and analyses for SBD components and piping located on the first floor to demonstrate non-credibility. Items located on higher floors are not subject to flooding.
SBD Components by Physical Arrangement			External Events (External Fire)	Components are protected from external fire events with the application of IROFS35 (fire barriers) and IROFS36g (vegetation fire control) to ensure the safe design attribute of physical arrangement is not adversely impacted.
SBD Components by Physical Arrangement			External Events (Snow/Ice)	Components are protected from snow/ice events with the application of IROFS27e to prevent building collapse to ensure the safe design attribute of physical arrangement is not adversely impacted. Water intrusion due to the snow/ice events is bounded by local intense precipitation.
Adherence to Double Contingency Principle				

Table 3.7-11 Contingency Dump System

Criticality Assessment of Passive Safe-By-Design Components – ETC4009567				
Component Description (A)	**Sequence ID (B)**	**Safe Design Attribute $k_{eff} < 0.95$ @ 6 wt % (unless physical arrangement) (Design Value, See Note) (C)**	**Review of Up-Set Conditions to Change Geometry (Applicable HAZOP Guidewords) (D)**	**Notes/Comments (E)**
All				Double Contingency Principle is satisfied as follows: The geometry is controlled such that the components are individually SBD by physical size or jointly SBD by physical arrangement, and no single credible event or failure has been identified that has the potential to adversely impact the safety function of the passive design features. The enrichment is also controlled such that no single credible event or failure could result in loss of enrichment control leading to criticality.

Column Descriptions:

Column A: This column provides a brief description of each component.

Column B: This column identifies the accident sequence associated with the passive component.

Column C: This column identifies the safe design attribute. The design value can be found in ETC4009567. Modeled value in criticality calculation may be more conservative than the design value.

Column D: This column identifies the applicable guidewords from the ISA HAZOP procedure that are used to assess the criticality design margin. Additional guidewords are addressed as applicable in the detailed assessment.

Column E: This column provides any notes, comments and concluding statements.

Table 3.7-11 Contingency Dump System

Criticality Assessment of Passive Safe-By-Design Components – ETC4009567				
Component Description (A)	Sequence ID (B)	Safe Design Attribute $k_{eff} < 0.95$ @ 6 wt % (unless physical arrangement) (Design Value, See Note) (C)	Review of Up-Set Conditions to Change Geometry (Applicable HAZOP Guidewords) (D)	Notes/Comments (E)

Table 3.7-12 Deleted

Table 3.7-12a Mobile Feed Sampling Rig				
Criticality Assessment of Passive Safe-By-Design Components				
Component Description (A)	**Sequence ID (B)**	**Safe Design Attribute (C)**	**Review of Up-Set Conditiona to Change Geometry (Applicable HAZOP Guidewords) (D)**	**Notes/Comments (E)**
Mobile Feed Sampling Rig overall configuration	LOSS OF SAFE-BY-DESIGN ATTRIBUTE	**Physical Arrangement** (See Table 3.7-13b) Keff < 0.95 @ 6.0 wt %		Based on qualitative assessment, there is margin between the normal operating conditions and the conservative design/analysis conditions assumed for criticality.
			More Heat	Based on qualitative assessment, it is highly unlikely for a process deviation to result in a more heat condition that would adversely affect the maintenance of margin to criticality associated with design and maximum operating parameter values for amount of ^{235}U and enrichment.
			More Pressure	Based on qualitative assessment, it is highly unlikely for a process deviation to result in a more pressure condition that would adversely affect the maintenance of margin to criticality associated with design and maximum operating parameter values for amount of ^{235}U and enrichment.
			Corrosion/Erosion	Based on qualitative assessment, it is highly unlikely for a process deviation to result in a corrosion/erosion condition that would affect the maintenance of margin to criticality associated with design and maximum operating parameter values for physical arrangement.
			Loss of Confinement or Leakage	Based on qualitative assessment, postulated loss of Mobile Feed Sampling Rig confinement or leakage will not result in any appreciable accumulation of ^{235}U material because of physical limitation of the process (sub-atmospheric) and the size of the sample containers. As a result, loss of confinement does not result in a potential criticality and therefore its consequence is low.
			Fire	Components shall be protected from fire to ensure the critical design attribute of physical arrangement is not adversely impacted.
			Maintenance	Configuration Management shall ensure that maintenance does not adversely impact the critical design attribute of physical arrangement.

Table 3.7-12a Mobile Feed Sampling Rig

Criticality Assessment of Passive Safe-By-Design Components

Component Description (A)	Sequence ID (B)	Safe Design Attribute (C)	Review of Up-Set Conditiona to Change Geometry (Applicable HAZOP Guidewords) (D)	Notes/Comments (E)
			Impact/Drop	Components shall be protected from impact/drop to ensure the critical design attribute of physical arrangement is not adversely impacted.
			External Events (Construction on Site)	Components shall be protected from construction on-site to ensure the critical design attribute of physical arrangement is not adversely impacted.
			External Events (Failure of Above-Ground Liquid Storage Tanks)	Components shall be protected from external flooding (Failure of Above-Ground Liquid Storage Tanks) to ensure the critical design attribute of physical arrangement is not adversely impacted.
			External Events (Seismic)	Components shall be protected from seismic events to ensure the critical design attribute of physical arrangement is not adversely impacted.
			External Events (External Fire)	Components shall be protected from external fire events to ensure the critical design attribute of physical arrangement is not adversely impacted.
				Double Contingency Principal is satisfied as follows. The geometry is criticality safe and no single credible event or failure has been identified whereby the geometry could become unsafe. The enrichment is also controlled such that no single credible failure could result in loss of enrichment control.

Column Descriptions:
Column A: This column provides a brief description of each component.
Column B: This column identifies the accident sequence associated with the passive component.
Column C: The column identifies the safe design attribute under consideration along with the conservative values used in the criticality analysis.
Column D: This column identifies the applicable guidewords from the ISA HAZOP procedure that are used to assess the criticality design margin. Additional guidewords are addressed as applicable in the detailed assessment.
Column E: This column provides any notes, comments and concluding statements.

Table 3.7-12b Safe Design Attributes for Mobile Feed Sampling System	
Physical Dimension	**Dimension Required for SBD (CM)**
Vacuum pump volume	< 18 liters
Pump inlet filter volume	< 18 liters
Pump outlet filter volume	< 18 liters
Mixed-bed trap diameter	< 21.9 cm
Interconnecting piping diameter	< 21.9 cm

Table 3.7-13 Deleted

Table 3.7-13a Pumped Extract GEVS				
Criticality Assessment of Passive Safe-By-Design Components				
Component Description (A)	**Sequence ID (B)**	**Safe Design Attribute (C)**	**Review of Up-Set Conditions to Change Geometry (Applicable HAZOP Guidewords) (D)**	**Notes/Comments (E)**
Pumped Extract GEVS overall configuration	LOSS OF SAFE-BY-DESIGN ATTRIBUTE	**Physical Arrangement** (See Table 3.7-13b) Keff ≤ 0.95 @ 6.0 wt %		Based on qualitative assessment, there is margin between the normal operating conditions and the conservative design/analysis conditions assumed for criticality.
			More Heat	Based on qualitative assessment, it is highly unlikely for a process deviation to result in a more heat condition that would adversely affect the maintenance of margin to criticality associated with design and maximum operating parameter values for amount of ^{235}U and enrichment.
			More Pressure	Based on qualitative assessment, it is highly unlikely for a process deviation to result in a more pressure condition that would adversely affect the maintenance of margin to criticality associated with design and maximum operating parameter values for amount of ^{235}U and enrichment.
			Corrosion/ Erosion	Based on qualitative assessment, it is highly unlikely for a process deviation to result in a corrosion/erosion condition that would affect the maintenance of margin to criticality associated with design and maximum operating parameter values for physical arrangement.
			Loss of Confinement or Leakage	Based on qualitative assessment, postulated loss of Pumped Extract GEVS confinement or leakage will not result in any appreciable accumulation of ^{235}U material because of physical limitations of the process (sub-atmospheric). As a result, loss of confinement does not result in a potential for criticality and therefore its consequence is low.
			Fire	Components shall be protected from fire to ensure the critical design attribute of physical arrangement is not adversely impacted.
			Maintenance	Configuration Management shall ensure that maintenance does not adversely impact the critical design attribute of physical arrangement.
			Impact/Drop	Components shall be protected from impact/drop to ensure the critical design attribute of physical arrangement is not adversely impacted.
			External Events (Construction on Site)	Components shall be protected from construction on-site to ensure the critical design attribute of physical arrangement is not adversely impacted.
			External Events (Failure of Above-Ground Liquid Storage Tanks)	Components shall be protected from external flooding (Failure of Above-Ground Liquid Storage Tanks) to ensure the critical design attribute of physical arrangement is not adversely impacted.

Table 3.7-13a Pumped Extract GEVS

Criticality Assessment of Passive Safe-By-Design Components				
Component Description (A)	**Sequence ID (B)**	**Safe Design Attribute (C)**	**Review of Up-Set Conditions to Change Geometry (Applicable HAZOP Guidewords) (D)**	**Notes/Comments (E)**
			External Events (Seismic)	Components shall be protected from seismic events to ensure the critical design attribute of physical arrangement is not adversely impacted.
			External Events (External Fire)	Components shall be protected from external fire events to ensure the critical design attribute of physical arrangement is not adversely impacted.
				Double Contingency Principle is satisfied as follows. The geometry is criticality safe and no single credible event or failure has been identified whereby the geometry could become unsafe. The enrichment is also controlled such that no single credible failure could result in loss of enrichment control.

Column Descriptions:

Column A: This column provides a brief description of each component.

Column B: This column identifies the accident sequence associated with the passive component.

Column C: This column identifies the safe design attribute under consideration along with the conservative values used in the criticality analysis.

Column D: This column identifies the applicable guidewords from the ISA HAZOP procedure that are used to assess the criticality design margin. Additional guidewords are addressed as applicable in the detailed assessment.

Column E: This column provides any notes, comments and concluding statements.

Table 3.7-13b Safe Design Attributes for Pumped Extract GEVS

Physical Dimension	Dimension Required for SBD (cm)
Center-to-Center Spacing between legs	≥ 98.0 cm
Vertical height of each filter housing/duct unit	≥ 37.8 cm
Filter doors	Δx ≤ 36.4 cm Δy ≤ 6.6 cm Δz ≤ 21.7 cm
Filter housing top layer	Δx ≤ 21.8 cm Δy ≤ 21.8 cm Δz ≤ 2.5 cm
Filter housing middle layer	Δx ≤ 26.1 cm Δy ≤ 25.7 cm Δz ≤ 10.9 cm
Filter housing lower layer	Δx ≤ 21.9 cm Δy ≤ 21.8 cm Δz ≤ 1.9 cm
Ducting between filters	Radius ≤ 7.7 cm Length ≥ 22.5 cm
Top ducting into upper header	Radius ≤ 7.7 cm Length ≥ 27.5 cm
Bottom ducting into lower header	Radius ≤ 7.7 cm Length ≥ 28.2 cm
Stainless steel thickness	Thickness ≥ 0.10 cm
Upper and Lower Headers	Width ≤ 12.4 cm Height ≤ 16.4 cm
Interconnecting Pipe	Diameter ≤ 16.83 cm
Fan-to-Fan Separation	Distance ≥ 186 cm
Fan housing width	Width ≤ 8.3 cm
Fan housing diameter	Radius ≤ 74.8 cm
Fan inlet duct	Diameter ≤ 21.0 cm

Table 3.7-14 Liquid Effluent Collection and Treatment System

Criticality Assessment of Passive Safe-By-Design Components				
Component Description (A)	**Sequence ID (B)**	**Critical Design Attribute (C)**	**Review of Up-Set Conditions to Change Geometry (Applicable HAZOP Guidewords) (D)**	**Notes/Comments (E)**
Waste Container Transport Device	LOSS OF SAFE-BY-DESIGN ATTRIBUTE	**PHYSICAL ARRANGEMENT**		Based on qualitative assessment, there is margin between the normal operating conditions and the conservative design/analysis conditions assumed for criticality.
			Corrosion/ Erosion	Based on qualitative assessment, it is highly unlikely for a process deviation to result in a corrosion/erosion condition that would affect the maintenance of margin to criticality associated with design and maximum operating parameter values for physical arrangement.
			Fire	Components shall be protected from fire to ensure the critical design attribute of physical arrangement is not adversely impacted.
			Maintenance	Configuration Management shall ensure that maintenance does not adversely impact the critical design attribute of physical arrangement.
			Impact/Drop	Components shall be protected from impact/drop to ensure the critical design attribute of physical arrangement is not adversely impacted.
			External Events (Construction on Site)	Components shall be protected from construction on-Site to ensure the critical design attribute of physical arrangement is not adversely impacted.
			External Events (Failure of Above-Ground Liquid Storage Tanks)	Components shall be protected from external flooding (Failure of Above-Ground Liquid Storage Tanks) to ensure the critical design attribute of physical arrangement is not adversely impacted.
			External Events (Hurricane)	Components shall be protected from hurricane events to ensure the critical design attribute of physical arrangement is not adversely impacted.
			External Events (Seismic)	Components shall be protected from seismic events to ensure the critical design attribute of physical arrangement is not adversely impacted.
			External Events (Tornado)	Components shall be protected from tornado events to ensure the critical design attribute of physical arrangement is not adversely impacted.
			External Events (Local Intense Precipitation)	Components shall be protected from local intense precipitation events to ensure the critical design attribute of physical arrangement is not adversely impacted.
			External Events (External Fire)	Components shall be protected from external fire events to ensure the critical design attribute of physical arrangement is not adversely impacted.
			External Events (Snow/Ice)	Components shall be protected from external ice/snow events to ensure the critical design attribute of physical arrangement is not adversely impacted.
				Double Contingency Principle is satisfied as follows. The geometry is criticality safe and no single credible event or failure has been identified whereby the geometry could become unsafe. The enrichment is also controlled such that no single credible failure could result in loss of enrichment control.

Table 3.7-14 Liquid Effluent Collection and Treatment System

Criticality Assessment of Passive Safe-By-Design Components				
Component Description (A)	**Sequence ID (B)**	**Critical Design Attribute (C)**	**Review of Up-Set Conditions to Change Geometry (Applicable HAZOP Guidewords) (D)**	**Notes/Comments (E)**
Waste Container	LOSS OF SAFE-BY-DESIGN ATTRIBUTE	**VOLUME** 24 liters Keff = 1.0 @ 6 wt %		Based on qualitative assessment, there is margin between the parameter value at normal operating conditions of Waste Container volume and the conservative design/analysis value for this parameter assumed for criticality.
			Corrosion/ Erosion	Based on qualitative assessment, it is highly unlikely for a process deviation to result in a corrosion/erosion condition that would cause an approach to the critical safe volume. Materials are corrosion/erosion resistant and postulated complete wall erosion would not exceed the critical safe volume.
			Loss of Confinement or Leakage	Based on qualitative assessment, postulated loss of Waste Container confinement or leakage will not result in any appreciable accumulation of ^{235}U material. As a result, loss of confinement does not result in a potential for criticality and therefore its consequence is low.
			Fire	Components shall be protected from fire to ensure the critical design attribute of volume is not adversely impacted.
			Maintenance	Configuration Management shall ensure that maintenance does not adversely impact the critical design attribute of volume.
				Double Contingency Principle is satisfied as follows. The geometry is criticality safe and no single credible event or failure has been identified whereby the geometry could become unsafe. The enrichment is also controlled such that no single credible failure could result in loss of enrichment control.
Waste Container Storage Array	LOSS OF SAFE-BY-DESIGN ATTRIBUTE	**PHYSICAL ARRANGEMENT**		Based on qualitative assessment, there is margin between the normal operating conditions and the conservative design/analysis conditions assumed for criticality.
			Corrosion/ Erosion	Based on qualitative assessment, it is highly unlikely for a process deviation to result in a corrosion/erosion condition that would affect the maintenance of margin to criticality associated with design and maximum operating parameter values.
			Fire	Components shall be protected from fire to ensure the critical design attribute of physical arrangement is not adversely impacted.
			Maintenance	Configuration Management shall ensure that maintenance does not adversely impact the critical design attribute of physical arrangement.
			Impact/Drop	Components shall be protected from impact/drop to ensure the critical design attribute of physical arrangement is not adversely impacted.
			External Events (Construction on Site)	Components shall be protected from construction on-Site to ensure the critical design attribute of physical arrangement is not adversely impacted.

Table 3.7-14 Liquid Effluent Collection and Treatment System

Criticality Assessment of Passive Safe-By-Design Components				
Component Description (A)	**Sequence ID (B)**	**Critical Design Attribute (C)**	**Review of Up-Set Conditions to Change Geometry (Applicable HAZOP Guidewords) (D)**	**Notes/Comments (E)**
			External Events (Failure of Above-Ground Liquid Storage Tanks)	Components shall be protected from external flooding (Failure of Above-Ground Liquid Storage Tanks) to ensure the critical design attribute of physical arrangement is not adversely impacted.
			External Events (Hurricane)	Components shall be protected from hurricane events to ensure the critical design attribute of physical arrangement is not adversely impacted.
			External Events (Seismic)	Components shall be protected from seismic events to ensure the critical design attribute of physical arrangement is not adversely impacted.
			External Events (Tornado)	Components shall be protected from tornado events to ensure the critical design attribute of physical arrangement is not adversely impacted.
			External Events (Local Intense Precipitation)	Components shall be protected from local intense precipitation events to ensure the critical design attribute of physical arrangement is not adversely impacted.
			External Events (External Fire)	Components shall be protected from external fire events to ensure the critical design attribute of physical arrangement is not adversely impacted.
			External Events (Snow/Ice)	Components shall be protected from external ice/snow events to ensure the critical design attribute of physical arrangement is not adversely impacted.
				Double Contingency Principle is satisfied as follows. The geometry is criticality safe and no single credible event or failure has been identified whereby the geometry could become unsafe. The enrichment is also controlled such that no single credible failure could result in loss of enrichment control.
Degreaser Water Centrifuge	LOSS OF SAFE-BY-DESIGN ATTRIBUTE	**VOLUME** 24 liters Keff = 1.0 @ 6 wt %		Based on qualitative assessment, there is margin between the parameter values at normal operating conditions of Degreaser Water Centrifuge volume, amount of ^{235}U and enrichment and the conservative design/analysis values for these parameters assumed for criticality.
			More Heat	Based on qualitative assessment, it is highly unlikely for a process deviation to result in a more heat condition that would cause an approach to the critical safe volume and to adversely affect the maintenance of margin to criticality associated with design and maximum operating parameter values for amount of ^{235}U and enrichment.
			More Pressure	Based on qualitative assessment, it is highly unlikely for a process deviation to result in a more pressure condition that would cause an approach to the critical safe volume and to adversely affect the maintenance of margin to criticality associated with design and maximum operating parameter values for amount of ^{235}U and enrichment.
			Corrosion/ Erosion	Based on qualitative assessment, it is highly unlikely for a process deviation to result in a corrosion/erosion condition that would cause an approach to the critical safe volume. Materials are corrosion/erosion resistant and postulated complete wall erosion would not exceed the critical safe volume.

Table 3.7-14 Liquid Effluent Collection and Treatment System

Criticality Assessment of Passive Safe-By-Design Components				
Component Description (A)	**Sequence ID (B)**	**Critical Design Attribute (C)**	**Review of Up-Set Conditions to Change Geometry (Applicable HAZOP Guidewords) (D)**	**Notes/Comments (E)**
			Loss of Confinement or Leakage	Degreaser Water Centrifuge shall be protected from loss of confinement or leakage with a curbed area to ensure subcriticality.
			Fire	Components shall be protected from fire to ensure the critical design attribute of volume is not adversely impacted.
			Maintenance	Configuration Management shall ensure that maintenance does not adversely impact the critical design attribute of volume.
			Impact/Drop	Components shall be protected from impact/drop to ensure the criticality design attribute of volume is not adversely impacted.
			External Events (Construction on Site)	Components shall be protected from construction on-Site to ensure the criticality design attribute of volume is not adversely impacted.
			External Events (Failure of Above-Ground Liquid Storage Tanks)	Components shall be protected from external flooding (Failure of Above-Ground Liquid Storage Tanks) to ensure the criticality design attribute of volume is not adversely impacted.
			External Events (Hurricane)	Components shall be protected from hurricane events to ensure the criticality design attribute of volume is not adversely impacted.
			External Events (Seismic)	Components shall be protected from seismic events to ensure the criticality design attribute of volume is not adversely impacted.
			External Events (Tornado)	Components shall be protected from tornado events to ensure the criticality design attribute of volume is not adversely impacted.
			External Events (Local Intense Precipitation)	Components shall be protected from local intense precipitation events to ensure the criticality design attribute of volume is not adversely impacted.
			External Events (External Fire)	Components shall be protected from external fire events to ensure the criticality design attribute of volume is not adversely impacted.
			External Events (Snow/Ice)	Components shall be protected from external ice/snow events to ensure the criticality design attribute of volume is not adversely impacted.
				Double Contingency Principle is satisfied as follows. The geometry is criticality safe and no single credible event or failure has been identified whereby the geometry could become unsafe. The enrichment is also controlled such that no single credible failure could result in loss of enrichment control.

Table 3.7-14 Liquid Effluent Collection and Treatment System

Criticality Assessment of Passive Safe-By-Design Components				
Component Description (A)	**Sequence ID (B)**	**Critical Design Attribute (C)**	**Review of Up-Set Conditions to Change Geometry (Applicable HAZOP Guidewords) (D)**	**Notes/Comments (E)**
Degreaser Water Tank Unloading Pump	LOSS OF SAFE-BY-DESIGN ATTRIBUTE	**VOLUME** 24 liters Keff = 1.0 @ 6 wt %		Based on qualitative assessment, there is margin between the parameter values at normal operating conditions of Degreaser Water Unloading Pump volume, amount of ^{235}U and enrichment and the conservative design/analysis values for these parameters assumed for criticality.
			More Heat	Based on qualitative assessment, it is highly unlikely for a process deviation to result in a more heat condition that would cause an approach to the critical safe volume and to adversely affect the maintenance of margin to criticality associated with design and maximum operating parameter values for amount of ^{235}U and enrichment.
			More Pressure	Based on qualitative assessment, it is highly unlikely for a process deviation to result in a more pressure condition that would cause an approach to the critical safe volume and to adversely affect the maintenance of margin to criticality associated with design and maximum operating parameter values for amount of ^{235}U and enrichment.
			Corrosion/ Erosion	Based on qualitative assessment, it is highly unlikely for a process deviation to result in a corrosion/erosion condition that would cause an approach to the critical safe volume. Materials are corrosion/erosion resistant and postulated complete wall erosion would not exceed the critical safe volume.
			Loss of Confinement or Leakage	Degreaser Water Tank Unloading Pump shall be protected from loss of confinement or leakage with a curbed area to ensure subcriticality.
			Fire	Components shall be protected from fire to ensure the critical design attribute of volume is not adversely impacted.
			Maintenance	Configuration Management shall ensure that maintenance does not adversely impact the critical design attribute of volume.
			Impact/Drop	Components shall be protected from impact/drop to ensure the criticality design attribute of volume is not adversely impacted.
			External Events (Construction on Site)	Components shall be protected from construction on-Site to ensure the criticality design attribute of volume is not adversely impacted.
			External Events (Failure of Above-Ground Liquid Storage Tanks)	Components shall be protected from external flooding (Failure of Above-Ground Liquid Storage Tanks) to ensure the criticality design attribute of volume is not adversely impacted.
			External Events (Hurricane)	Components shall be protected from hurricane events to ensure the criticality design attribute of volume is not adversely impacted.
			External Events (Seismic)	Components shall be protected from seismic events to ensure the criticality design attribute of volume is not adversely impacted.
			External Events (Tornado)	Components shall be protected from tornado events to ensure the criticality design attribute of volume is not adversely impacted.

Table 3.7-14 Liquid Effluent Collection and Treatment System

Criticality Assessment of Passive Safe-By-Design Components				
Component Description (A)	**Sequence ID (B)**	**Critical Design Attribute (C)**	**Review of Up-Set Conditions to Change Geometry (Applicable HAZOP Guidewords) (D)**	**Notes/Comments (E)**
			External Events (Local Intense Precipitation)	Components shall be protected from local intense precipitation events to ensure the criticality design attribute of volume is not adversely impacted.
			External Events (External Fire)	Components shall be protected from external fire events to ensure the criticality design attribute of volume is not adversely impacted.
			External Events (Snow/Ice)	Components shall be protected from external ice/snow events to ensure the criticality design attribute of volume is not adversely impacted.
				Double Contingency Principle is satisfied as follows. The geometry is criticality safe and no single credible event or failure has been identified whereby the geometry could become unsafe. The enrichment is also controlled such that no single credible failure could result in loss of enrichment control.
Degreaser Water Transfer Pump	LOSS OF SAFE-BY-DESIGN ATTRIBUTE	**VOLUME** 24 liters Keff = 1.0 @ 6 wt %		Based on qualitative assessment, there is margin between the parameter values at normal operating conditions of Degreaser Water Transfer Pump volume, amount of ^{235}U and enrichment and the conservative design/analysis values for these parameters assumed for criticality.
			More Heat	Based on qualitative assessment, it is highly unlikely for a process deviation to result in a more heat condition that would cause an approach to the critical safe volume and to adversely affect the maintenance of margin to criticality associated with design and maximum operating parameter values for amount of ^{235}U and enrichment.
			More Pressure	Based on qualitative assessment, it is highly unlikely for a process deviation to result in a more pressure condition that would cause an approach to the critical safe volume and to adversely affect the maintenance of margin to criticality associated with design and maximum operating parameter values for amount of ^{235}U and enrichment.
			Corrosion/ Erosion	Based on qualitative assessment, it is highly unlikely for a process deviation to result in a corrosion/erosion condition that would cause an approach to the critical safe volume. Materials are corrosion/erosion resistant and postulated complete wall erosion would not exceed the critical safe volume.
			Loss of Confinement or Leakage	Degreaser Water Transfer Pump shall be protected from loss of confinement or leakage with a curbed area to ensure subcriticality.
			Fire	Components shall be protected from fire to ensure the critical design attribute of volume is not adversely impacted.
			Maintenance	Configuration Management shall ensure that maintenance does not adversely impact the critical design attribute of volume.
			Impact/Drop	Components shall be protected from impact/drop to ensure the criticality design attribute of volume is not adversely impacted.
			External Events (Construction on Site)	Components shall be protected from construction on-Site to ensure the criticality design attribute of volume is not adversely impacted.

Table 3.7-14 Liquid Effluent Collection and Treatment System

Criticality Assessment of Passive Safe-By-Design Components				
Component Description (A)	**Sequence ID (B)**	**Critical Design Attribute (C)**	**Review of Up-Set Conditions to Change Geometry (Applicable HAZOP Guidewords) (D)**	**Notes/Comments (E)**
			External Events (Failure of Above-Ground Liquid Storage Tanks)	Components shall be protected from external flooding (Failure of Above-Ground Liquid Storage Tanks) to ensure the criticality design attribute of volume is not adversely impacted.
			External Events (Hurricane)	Components shall be protected from hurricane events to ensure the criticality design attribute of volume is not adversely impacted.
			External Events (Seismic)	Components shall be protected from seismic events to ensure the criticality design attribute of volume is not adversely impacted.
			External Events (Tornado)	Components shall be protected from tornado events to ensure the criticality design attribute of volume is not adversely impacted.
			External Events (Local Intense Precipitation)	Components shall be protected from local intense precipitation events to ensure the criticality design attribute of volume is not adversely impacted.
			External Events (External Fire)	Components shall be protected from external fire events to ensure the criticality design attribute of volume is not adversely impacted.
			External Events (Snow/Ice)	Components shall be protected from external ice/snow events to ensure the criticality design attribute of volume is not adversely impacted.
				Double Contingency Principle is satisfied as follows. The geometry is criticality safe and no single credible event or failure has been identified whereby the geometry could become unsafe. The enrichment is also controlled such that no single credible failure could result in loss of enrichment control.
Degreaser Water Centrifuge Feed Pump	LOSS OF SAFE-BY-DESIGN ATTRIBUTE	**VOLUME** 24 liters Keff = 1.0 @ 6 wt %		Based on qualitative assessment, there is margin between the parameter values at normal operating conditions of Degreaser Water Centrifuge Feed Pump volume, amount of ^{235}U and enrichment and the conservative design/analysis values for these parameters assumed for criticality.
			More Heat	Based on qualitative assessment, it is highly unlikely for a process deviation to result in a more heat condition that would cause an approach to the critical safe volume and to adversely affect the maintenance of margin to criticality associated with design and maximum operating parameter values for amount of ^{235}U and enrichment.
			More Pressure	Based on qualitative assessment, it is highly unlikely for a process deviation to result in a more pressure condition that would cause an approach to the critical safe volume and to adversely affect the maintenance of margin to criticality associated with design and maximum operating parameter values for amount of ^{235}U and enrichment.
			Corrosion/ Erosion	Based on qualitative assessment, it is highly unlikely for a process deviation to result in a corrosion/erosion condition that would cause an approach to the critical safe volume. Materials are corrosion/erosion resistant and postulated complete wall erosion would not exceed the critical safe volume.

Table 3.7-14 Liquid Effluent Collection and Treatment System

Criticality Assessment of Passive Safe-By-Design Components				
Component Description (A)	**Sequence ID (B)**	**Critical Design Attribute (C)**	**Review of Up-Set Conditions to Change Geometry (Applicable HAZOP Guidewords) (D)**	**Notes/Comments (E)**
			Loss of Confinement or Leakage	Degreaser Water Centrifuge Feed Pump shall be protected from loss of confinement or leakage with a curbed area to ensure subcriticality.
			Fire	Components shall be protected from fire to ensure the critical design attribute of volume is not adversely impacted.
			Maintenance	Configuration Management shall ensure that maintenance does not adversely impact the critical design attribute of volume.
			Impact/Drop	Components shall be protected from impact/drop to ensure the criticality design attribute of volume is not adversely impacted.
			External Events (Construction on Site)	Components shall be protected from construction on-Site to ensure the criticality design attribute of volume is not adversely impacted.
			External Events (Failure of Above-Ground Liquid Storage Tanks)	Components shall be protected from external flooding (Failure of Above-Ground Liquid Storage Tanks) to ensure the criticality design attribute of volume is not adversely impacted.
			External Events (Hurricane)	Components shall be protected from hurricane events to ensure the criticality design attribute of volume is not adversely impacted.
			External Events (Seismic)	Components shall be protected from seismic events to ensure the criticality design attribute of volume is not adversely impacted.
			External Events (Tornado)	Components shall be protected from tornado events to ensure the criticality design attribute of volume is not adversely impacted.
			External Events (Local Intense Precipitation)	Components shall be protected from local intense precipitation events to ensure the criticality design attribute of volume is not adversely impacted.
			External Events (External Fire)	Components shall be protected from external fire events to ensure the criticality design attribute of volume is not adversely impacted.
			External Events (Snow/Ice)	Components shall be protected from external ice/snow events to ensure the criticality design attribute of volume is not adversely impacted.
				Double Contingency Principle is satisfied as follows. The geometry is criticality safe and no single credible event or failure has been identified whereby the geometry could become unsafe. The enrichment is also controlled such that no single credible failure could result in loss of enrichment control.

Table 3.7-14 Liquid Effluent Collection and Treatment System

Criticality Assessment of Passive Safe-By-Design Components				
Component Description (A)	**Sequence ID (B)**	**Critical Design Attribute (C)**	**Review of Up-Set Conditions to Change Geometry (Applicable HAZOP Guidewords) (D)**	**Notes/Comments (E)**
Degreaser Water Piping (largest pipe ID in subsystem)	LOSS OF SAFE-BY-DESIGN ATTRIBUTE	**DIAMETER** 24.4 cm (ID) Keff = 1.0 @ 6 wt %		Based on qualitative assessment, there is margin between the parameter values at normal operating conditions of pipe diameter, amount of ^{235}U and enrichment and the conservative design/analysis values for these parameters assumed for criticality.
			More Heat	Based on qualitative assessment, it is highly unlikely for a process deviation to result in a more heat condition that would cause an approach to the critical safe diameter and to adversely affect the maintenance of margin to criticality associated with design and maximum operating parameter values for amount of ^{235}U and enrichment.
			More Pressure	Based on qualitative assessment, it is highly unlikely for a process deviation to result in a more pressure condition that would cause an approach to the critical safe diameter and to adversely affect the maintenance of margin to criticality associated with design and maximum operating parameter values for amount of ^{235}U and enrichment.
			Corrosion/ Erosion	Based on qualitative assessment, it is highly unlikely for a process deviation to result in a corrosion/erosion condition that would cause an approach to the critical safe diameter. Materials are corrosion/erosion resistant and postulated complete wall erosion would not exceed the critical safe diameter.
			Loss of Confinement or Leakage	Piping system shall be protected from loss of confinement or leakage with a confinement area to ensure subcriticality.
			Fire	Components shall be protected from fire to ensure the critical design attribute of diameter is not adversely impacted.
			Maintenance	Configuration Management shall ensure that maintenance does not adversely impact the critical design attribute of diameter.
			Impact/Drop	Components shall be protected from impact/drop to ensure the criticality design attribute of diameter is not adversely impacted.
			External Events (Construction on Site)	Components shall be protected from construction on-Site to ensure the criticality design attribute of diameter is not adversely impacted.
			External Events (Failure of Above-Ground Liquid Storage Tanks)	Components shall be protected from external flooding (Failure of Above-Ground Liquid Storage Tanks) to ensure the criticality design attribute of diameter is not adversely impacted.
			External Events (Hurricane)	Components shall be protected from hurricane events to ensure the criticality design attribute of diameter is not adversely impacted.
			External Events (Seismic)	Components shall be protected from seismic events to ensure the criticality design attribute of diameter is not adversely impacted.
			External Events (Tornado)	Components shall be protected from tornado events to ensure the criticality design attribute of diameter is not adversely impacted.

Table 3.7-14 Liquid Effluent Collection and Treatment System

Criticality Assessment of Passive Safe-By-Design Components				
Component Description (A)	**Sequence ID (B)**	**Critical Design Attribute (C)**	**Review of Up-Set Conditions to Change Geometry (Applicable HAZOP Guidewords) (D)**	**Notes/Comments (E)**
			External Events (Local Intense Precipitation)	Components shall be protected from local intense precipitation events to ensure the criticality design attribute of diameter is not adversely impacted.
			External Events (External Fire)	Components shall be protected from external fire events to ensure the criticality design attribute of diameter is not adversely impacted.
			External Events (Snow/Ice)	Components shall be protected from external ice/snow events to ensure the criticality design attribute of diameter is not adversely impacted.
				Double Contingency Principle is satisfied as follows. The geometry is criticality safe and no single credible event or failure has been identified whereby the geometry could become unsafe. The enrichment is also controlled such that no single credible failure could result in loss of enrichment control.
Degreaser Water Piping Arrangement	LOSS OF SAFE-BY-DESIGN ATTRIBUTE	**PHYSICAL ARRANGEMENT**		Based on qualitative assessment, there is margin between the normal operating conditions and the conservative design/analysis conditions assumed for criticality.
			More Heat	Based on qualitative assessment, it is highly unlikely for a process deviation to result in a more heat condition that would adversely affect the maintenance of margin to criticality associated with design and maximum operating parameter values for amount of ^{235}U and enrichment.
			More Pressure	Based on qualitative assessment, it is highly unlikely for a process deviation to result in a more pressure condition that would adversely affect the maintenance of margin to criticality associated with design and maximum operating parameter values for amount of ^{235}U and enrichment.
			Corrosion/ Erosion	Based on qualitative assessment, it is highly unlikely for a process deviation to result in a corrosion/erosion condition that would affect the maintenance of margin to criticality associated with design and maximum operating parameter values for physical arrangement.
			Loss of Confinement or Leakage	Piping system shall be protected from loss of confinement or leakage with a confinement area to ensure subcriticality.
			Fire	Components shall be protected from fire to ensure the critical design attribute of physical arrangement is not adversely impacted.
			Maintenance	Configuration Management shall ensure that maintenance does not adversely impact the critical design attribute of physical arrangement.
			Impact/Drop	Components shall be protected from impact/drop to ensure the critical design attribute of physical arrangement is not adversely impacted.
			External Events (Construction on Site)	Components shall be protected from construction on-Site to ensure the critical design attribute of physical arrangement is not adversely impacted.

Table 3.7-14 Liquid Effluent Collection and Treatment System

Criticality Assessment of Passive Safe-By-Design Components				
Component Description (A)	**Sequence ID (B)**	**Critical Design Attribute (C)**	**Review of Up-Set Conditions to Change Geometry (Applicable HAZOP Guidewords) (D)**	**Notes/Comments (E)**
			External Events (Failure of Above-Ground Liquid Storage Tanks)	Components shall be protected from external flooding (Failure of Above-Ground Liquid Storage Tanks) to ensure the critical design attribute of physical arrangement is not adversely impacted.
			External Events (Hurricane)	Components shall be protected from hurricane events to ensure the critical design attribute of physical arrangement is not adversely impacted.
			External Events (Seismic)	Components shall be protected from seismic events to ensure the critical design attribute of physical arrangement is not adversely impacted.
			External Events (Tornado)	Components shall be protected from tornado events to ensure the critical design attribute of physical arrangement is not adversely impacted.
			External Events (Local Intense Precipitation)	Components shall be protected from local intense precipitation events to ensure the critical design attribute of physical arrangement is not adversely impacted.
			External Events (External Fire)	Components shall be protected from external fire events to ensure the critical design attribute of physical arrangement is not adversely impacted.
			External Events (Snow/Ice)	Components shall be protected from external ice/snow events to ensure the critical design attribute of physical arrangement is not adversely impacted.
				Double Contingency Principle is satisfied as follows. The geometry is criticality safe and no single credible event or failure has been identified whereby the geometry could become unsafe. The enrichment is also controlled such that no single credible failure could result in loss of enrichment control.
Spent Citric Acid Piping (largest pipe ID in subsystem)	LOSS OF SAFE-BY-DESIGN ATTRIBUTE	**DIAMETER** 24.4 cm (ID) Keff = 1.0 @ 6 wt %		Based on qualitative assessment, there is margin between the parameter values at normal operating conditions of pipe diameter, amount of ^{235}U and enrichment and the conservative design/analysis values for these parameters assumed for criticality.
			More Heat	Based on qualitative assessment, it is highly unlikely for a process deviation to result in a more heat condition that would cause an approach to the critical safe diameter and to adversely affect the maintenance of margin to criticality associated with design and maximum operating parameter values for amount of ^{235}U and enrichment.
			More Pressure	Based on qualitative assessment, it is highly unlikely for a process deviation to result in a more pressure condition that would cause an approach to the critical safe diameter and to adversely affect the maintenance of margin to criticality associated with design and maximum operating parameter values for amount of ^{235}U and enrichment.
			Corrosion/ Erosion	Based on qualitative assessment, it is highly unlikely for a process deviation to result in a corrosion/erosion condition that would cause an approach to the critical safe diameter. Materials are corrosion/erosion resistant and postulated complete wall erosion would not exceed the critical safe diameter.

Table 3.7-14 Liquid Effluent Collection and Treatment System

Criticality Assessment of Passive Safe-By-Design Components				
Component Description (A)	**Sequence ID (B)**	**Critical Design Attribute (C)**	**Review of Up-Set Conditions to Change Geometry (Applicable HAZOP Guidewords) (D)**	**Notes/Comments (E)**
			Loss of Confinement or Leakage	Piping system shall be protected from loss of confinement or leakage with a confinement area to ensure subcriticality.
			Fire	Components shall be protected from fire to ensure the critical design attribute of diameter is not adversely impacted.
			Maintenance	Configuration Management shall ensure that maintenance does not adversely impact the critical design attribute of diameter.
			Impact/Drop	Components shall be protected from impact/drop to ensure the criticality design attribute of diameter is not adversely impacted.
			External Events (Construction on Site)	Components shall be protected from construction on-Site to ensure the criticality design attribute of diameter is not adversely impacted.
			External Events (Failure of Above-Ground Liquid Storage Tanks)	Components shall be protected from external flooding (Failure of Above-Ground Liquid Storage Tanks) to ensure the criticality design attribute of diameter is not adversely impacted.
			External Events (Hurricane)	Components shall be protected from hurricane events to ensure the criticality design attribute of diameter is not adversely impacted.
			External Events (Seismic)	Components shall be protected from seismic events to ensure the criticality design attribute of diameter is not adversely impacted.
			External Events (Tornado)	Components shall be protected from tornado events to ensure the criticality design attribute of diameter is not adversely impacted.
			External Events (Local Intense Precipitation)	Components shall be protected from local intense precipitation events to ensure the criticality design attribute of diameter is not adversely impacted.
			External Events (External Fire)	Components shall be protected from external fire events to ensure the criticality design attribute of diameter is not adversely impacted.
			External Events (Snow/Ice)	Components shall be protected from external ice/snow events to ensure the criticality design attribute of diameter is not adversely impacted.
				Double Contingency Principle is satisfied as follows. The geometry is criticality safe and no single credible event or failure has been identified whereby the geometry could become unsafe. The enrichment is also controlled such that no single credible failure could result in loss of enrichment control.

Table 3.7-14 Liquid Effluent Collection and Treatment System

Criticality Assessment of Passive Safe-By-Design Components				
Component Description (A)	**Sequence ID (B)**	**Critical Design Attribute (C)**	**Review of Up-Set Conditions to Change Geometry (Applicable HAZOP Guidewords) (D)**	**Notes/Comments (E)**
Spent Citric Acid Piping Arrangement	LOSS OF SAFE-BY-DESIGN ATTRIBUTE	**PHYSICAL ARRANGEMENT**		Based on qualitative assessment, there is margin between the normal operating conditions and the conservative design/analysis conditions assumed for criticality.
			More Heat	Based on qualitative assessment, it is highly unlikely for a process deviation to result in a more heat condition that would adversely affect the maintenance of margin to criticality associated with design and maximum operating parameter values for amount of ^{235}U and enrichment.
			More Pressure	Based on qualitative assessment, it is highly unlikely for a process deviation to result in a more pressure condition that would adversely affect the maintenance of margin to criticality associated with design and maximum operating parameter values for amount of ^{235}U and enrichment.
			Corrosion/ Erosion	Based on qualitative assessment, it is highly unlikely for a process deviation to result in a corrosion/erosion condition that would affect the maintenance of margin to criticality associated with design and maximum operating parameter values for physical arrangement.
			Loss of Confinement or Leakage	Piping system shall be protected from loss of confinement or leakage with a confinement area to ensure subcriticality.
			Fire	Components shall be protected from fire to ensure the critical design attribute of physical arrangement is not adversely impacted.
			Maintenance	Configuration Management shall ensure that maintenance does not adversely impact the critical design attribute of physical arrangement.
			Impact/Drop	Components shall be protected from impact/drop to ensure the critical design attribute of physical arrangement is not adversely impacted.
			External Events (Construction on Site)	Components shall be protected from construction on-Site to ensure the critical design attribute of physical arrangement is not adversely impacted.
			External Events (Failure of Above-Ground Liquid Storage Tanks)	Components shall be protected from external flooding (Failure of Above-Ground Liquid Storage Tanks) to ensure the critical design attribute of physical arrangement is not adversely impacted.
			External Events (Hurricane)	Components shall be protected from hurricane events to ensure the critical design attribute of physical arrangement is not adversely impacted.
			External Events (Seismic)	Components shall be protected from seismic events to ensure the critical design attribute of physical arrangement is not adversely impacted.
			External Events (Tornado)	Components shall be protected from tornado events to ensure the critical design attribute of physical arrangement is not adversely impacted.
			External Events (Local Intense Precipitation)	Components shall be protected from local intense precipitation events to ensure the critical design attribute of physical arrangement is not adversely impacted.

Table 3.7-14 Liquid Effluent Collection and Treatment System

Criticality Assessment of Passive Safe-By-Design Components				
Component Description (A)	**Sequence ID (B)**	**Critical Design Attribute (C)**	**Review of Up-Set Conditions to Change Geometry (Applicable HAZOP Guidewords) (D)**	**Notes/Comments (E)**
			External Events (External Fire)	Components shall be protected from external fire events to ensure the critical design attribute of physical arrangement is not adversely impacted.
			External Events (Snow/Ice)	Components shall be protected from external ice/snow events to ensure the critical design attribute of physical arrangement is not adversely impacted.
				Double Contingency Principle is satisfied as follows. The geometry is criticality safe and no single credible event or failure has been identified whereby the geometry could become unsafe. The enrichment is also controlled such that no single credible failure could result in loss of enrichment control.
Spent Citric Acid Transfer Pump	LOSS OF SAFE-BY-DESIGN ATTRIBUTE	**VOLUME** 24. liters Keff = 1.0 @ 6 wt %		Based on qualitative assessment, there is margin between the parameter values at normal operating conditions of Spent Citric Acid Transfer Pump volume, amount of ^{235}U and enrichment and the conservative design/analysis values for these parameters assumed for criticality.
			More Heat	Based on qualitative assessment, it is highly unlikely for a process deviation to result in a more heat condition that would cause an approach to the critical safe volume and to adversely affect the maintenance of margin to criticality associated with design and maximum operating parameter values for amount of ^{235}U and enrichment.
			More Pressure	Based on qualitative assessment, it is highly unlikely for a process deviation to result in a more pressure condition that would cause an approach to the critical safe volume and to adversely affect the maintenance of margin to criticality associated with design and maximum operating parameter values for amount of ^{235}U and enrichment.
			Corrosion/ Erosion	Based on qualitative assessment, it is highly unlikely for a process deviation to result in a corrosion/erosion condition that would cause an approach to the critical safe volume. Materials are corrosion/erosion resistant and postulated complete wall erosion would not exceed the critical safe volume.
			Loss of Confinement or Leakage	Spent Citric Acid Transfer Pump shall be protected from loss of confinement or leakage with a confinement area to ensure subcriticality.
			Fire	Components shall be protected from fire to ensure the critical design attribute of volume is not adversely impacted.
			Maintenance	Configuration Management shall ensure that maintenance does not adversely impact the critical design attribute of volume.
			Impact/Drop	Components shall be protected from impact/drop to ensure the criticality design attribute of volume is not adversely impacted.
			External Events (Construction on Site)	Components shall be protected from construction on-Site to ensure the criticality design attribute of volume is not adversely impacted.

Table 3.7-14 Liquid Effluent Collection and Treatment System

Criticality Assessment of Passive Safe-By-Design Components				
Component Description (A)	**Sequence ID (B)**	**Critical Design Attribute (C)**	**Review of Up-Set Conditions to Change Geometry (Applicable HAZOP Guidewords) (D)**	**Notes/Comments (E)**
			External Events (Failure of Above-Ground Liquid Storage Tanks)	Components shall be protected from external flooding (Failure of Above-Ground Liquid Storage Tanks) to ensure the criticality design attribute of volume is not adversely impacted.
			External Events (Hurricane)	Components shall be protected from hurricane events to ensure the criticality design attribute of volume is not adversely impacted.
			External Events (Seismic)	Components shall be protected from seismic events to ensure the criticality design attribute of volume is not adversely impacted.
			External Events (Tornado)	Components shall be protected from tornado events to ensure the criticality design attribute of volume is not adversely impacted.
			External Events (Local Intense Precipitation)	Components shall be protected from local intense precipitation events to ensure the criticality design attribute of volume is not adversely impacted.
			External Events (External Fire)	Components shall be protected from external fire events to ensure the criticality design attribute of volume is not adversely impacted.
			External Events (Snow/Ice)	Components shall be protected from external ice/snow events to ensure the criticality design attribute of volume is not adversely impacted.
				Double Contingency Principle is satisfied as follows. The geometry is criticality safe and no single credible event or failure has been identified whereby the geometry could become unsafe. The enrichment is also controlled such that no single credible failure could result in loss of enrichment control.
Spent Citric Acid Unloading Pump	LOSS OF SAFE-BY-DESIGN ATTRIBUTE	**VOLUME** 24 liters Keff = 1.0 @ 6 wt %		Based on qualitative assessment, there is margin between the parameter values at normal operating conditions of Spent Citric Acid Unloading Pump volume, amount of ^{235}U and enrichment and the conservative design/analysis values for these parameters assumed for criticality.
			More Heat	Based on qualitative assessment, it is highly unlikely for a process deviation to result in a more heat condition that would cause an approach to the critical safe volume and to adversely affect the maintenance of margin to criticality associated with design and maximum operating parameter values for amount of ^{235}U and enrichment.
			More Pressure	Based on qualitative assessment, it is highly unlikely for a process deviation to result in a more pressure condition that would cause an approach to the critical safe volume and to adversely affect the maintenance of margin to criticality associated with design and maximum operating parameter values for amount of ^{235}U and enrichment.
			Corrosion/ Erosion	Based on qualitative assessment, it is highly unlikely for a process deviation to result in a corrosion/erosion condition that would cause an approach to the critical safe volume. Materials are corrosion/erosion resistant and postulated complete wall erosion would not exceed the critical safe volume.

Table 3.7-14 Liquid Effluent Collection and Treatment System

Criticality Assessment of Passive Safe-By-Design Components				
Component Description (A)	**Sequence ID (B)**	**Critical Design Attribute (C)**	**Review of Up-Set Conditions to Change Geometry (Applicable HAZOP Guidewords) (D)**	**Notes/Comments (E)**
			Loss of Confinement or Leakage	Spent Citric Acid Unloading Pump shall be protected from loss of confinement or leakage with a confinement area to ensure subcriticality.
			Fire	Components shall be protected from fire to ensure the critical design attribute of volume is not adversely impacted.
			Maintenance	Configuration Management shall ensure that maintenance does not adversely impact the critical design attribute of volume.
			Impact/Drop	Components shall be protected from impact/drop to ensure the criticality design attribute of volume is not adversely impacted.
			External Events (Construction on Site)	Components shall be protected from construction on-Site to ensure the criticality design attribute of volume is not adversely impacted.
			External Events (Failure of Above-Ground Liquid Storage Tanks)	Components shall be protected from external flooding (Failure of Above-Ground Liquid Storage Tanks) to ensure the criticality design attribute of volume is not adversely impacted.
			External Events (Hurricane)	Components shall be protected from hurricane events to ensure the criticality design attribute of volume is not adversely impacted.
			External Events (Seismic)	Components shall be protected from seismic events to ensure the criticality design attribute of volume is not adversely impacted.
			External Events (Tornado)	Components shall be protected from tornado events to ensure the criticality design attribute of volume is not adversely impacted.
			External Events (Local Intense Precipitation)	Components shall be protected from local intense precipitation events to ensure the criticality design attribute of volume is not adversely impacted.
			External Events (External Fire)	Components shall be protected from external fire events to ensure the criticality design attribute of volume is not adversely impacted.
			External Events (Snow/Ice)	Components shall be protected from external ice/snow events to ensure the criticality design attribute of volume is not adversely impacted.
				Double Contingency Principle is satisfied as follows. The geometry is criticality safe and no single credible event or failure has been identified whereby the geometry could become unsafe. The enrichment is also controlled such that no single credible failure could result in loss of enrichment control.

Table 3.7-14 Liquid Effluent Collection and Treatment System

Criticality Assessment of Passive Safe-By-Design Components				
Component Description (A)	**Sequence ID (B)**	**Critical Design Attribute (C)**	**Review of Up-Set Conditions to Change Geometry (Applicable HAZOP Guidewords) (D)**	**Notes/Comments (E)**
Laboratory Waste Pump	LOSS OF SAFE-BY-DESIGN ATTRIBUTE	**VOLUME** 24 liters Keff = 1.0 @ 6 wt %		Based on qualitative assessment, there is margin between the parameter values at normal operating conditions of Laboratory Waste Pump volume, amount of ^{235}U and enrichment and the conservative design/analysis values for these parameters assumed for criticality.
			More Heat	Based on qualitative assessment, it is highly unlikely for a process deviation to result in a more heat condition that would cause an approach to the critical safe volume and to adversely affect the maintenance of margin to criticality associated with design and maximum operating parameter values for amount of ^{235}U and enrichment.
			More Pressure	Based on qualitative assessment, it is highly unlikely for a process deviation to result in a more pressure condition that would cause an approach to the critical safe volume and to adversely affect the maintenance of margin to criticality associated with design and maximum operating parameter values for amount of ^{235}U and enrichment.
			Corrosion/ Erosion	Based on qualitative assessment, it is highly unlikely for a process deviation to result in a corrosion/erosion condition that would cause an approach to the critical safe volume. Materials are corrosion/erosion resistant and postulated complete wall erosion would not exceed the critical safe volume.
			Loss of Confinement or Leakage	Laboratory Waste Pump shall be protected from loss of confinement or leakage with a confinement area to ensure subcriticality.
			Fire	Components shall be protected from fire to ensure the critical design attribute of volume is not adversely impacted.
			Maintenance	Configuration Management shall ensure that maintenance does not adversely impact the critical design attribute of volume.
			Impact/Drop	Components shall be protected from impact/drop to ensure the criticality design attribute of volume is not adversely impacted.
			External Events (Construction on Site)	Components shall be protected from construction on-Site to ensure the criticality design attribute of volume is not adversely impacted.
			External Events (Failure of Above-Ground Liquid Storage Tanks)	Components shall be protected from external flooding (Failure of Above-Ground Liquid Storage Tanks) to ensure the criticality design attribute of volume is not adversely impacted.
			External Events (Hurricane)	Components shall be protected from hurricane events to ensure the criticality design attribute of volume is not adversely impacted.
			External Events (Seismic)	Components shall be protected from seismic events to ensure the criticality design attribute of volume is not adversely impacted.
			External Events (Tornado)	Components shall be protected from tornado events to ensure the criticality design attribute of volume is not adversely impacted.

Table 3.7-14 Liquid Effluent Collection and Treatment System

Criticality Assessment of Passive Safe-By-Design Components				
Component Description (A)	**Sequence ID (B)**	**Critical Design Attribute (C)**	**Review of Up-Set Conditions to Change Geometry (Applicable HAZOP Guidewords) (D)**	**Notes/Comments (E)**
			External Events (Local Intense Precipitation)	Components shall be protected from local intense precipitation events to ensure the criticality design attribute of volume is not adversely impacted.
			External Events (External Fire)	Components shall be protected from external fire events to ensure the criticality design attribute of volume is not adversely impacted.
			External Events (Snow/Ice)	Components shall be protected from external ice/snow events to ensure the criticality design attribute of volume is not adversely impacted.
				Double Contingency Principle is satisfied as follows. The geometry is criticality safe and no single credible event or failure has been identified whereby the geometry could become unsafe. The enrichment is also controlled such that no single credible failure could result in loss of enrichment control.
Miscellaneous Effluent Transfer Pump	LOSS OF SAFE-BY-DESIGN ATTRIBUTE	**VOLUME** 24 liters Keff = 1.0 @ 6 wt %		Based on qualitative assessment, there is margin between the parameter values at normal operating conditions of Miscellaneous Effluent Transfer Pump volume, amount of ^{235}U and enrichment and the conservative design/analysis values for these parameters assumed for criticality.
			More Heat	Based on qualitative assessment, it is highly unlikely for a process deviation to result in a more heat condition that would cause an approach to the critical safe volume and to adversely affect the maintenance of margin to criticality associated with design and maximum operating parameter values for amount of ^{235}U and enrichment.
			More Pressure	Based on qualitative assessment, it is highly unlikely for a process deviation to result in a more pressure condition that would cause an approach to the critical safe volume and to adversely affect the maintenance of margin to criticality associated with design and maximum operating parameter values for amount of ^{235}U and enrichment.
			Corrosion/ Erosion	Based on qualitative assessment, it is highly unlikely for a process deviation to result in a corrosion/erosion condition that would cause an approach to the critical safe volume. Materials are corrosion/erosion resistant and postulated complete wall erosion would not exceed the critical safe volume.
			Loss of Confinement or Leakage	Miscellaneous Effluent Transfer Pump shall be protected from loss of confinement or leakage with a confinement area to ensure subcriticality.
			Fire	Components shall be protected from fire to ensure the critical design attribute of volume is not adversely impacted.
			Maintenance	Configuration Management shall ensure that maintenance does not adversely impact the critical design attribute of volume.
			Impact/Drop	Components shall be protected from impact/drop to ensure the criticality design attribute of volume is not adversely impacted.
			External Events (Construction on Site)	Components shall be protected from construction on-Site to ensure the criticality design attribute of volume is not adversely impacted.

Table 3.7-14 Liquid Effluent Collection and Treatment System

Criticality Assessment of Passive Safe-By-Design Components				
Component Description (A)	**Sequence ID (B)**	**Critical Design Attribute (C)**	**Review of Up-Set Conditions to Change Geometry (Applicable HAZOP Guidewords) (D)**	**Notes/Comments (E)**
			External Events (Failure of Above-Ground Liquid Storage Tanks)	Components shall be protected from external flooding (Failure of Above-Ground Liquid Storage Tanks) to ensure the criticality design attribute of volume is not adversely impacted.
			External Events (Hurricane)	Components shall be protected from hurricane events to ensure the criticality design attribute of volume is not adversely impacted.
			External Events (Seismic)	Components shall be protected from seismic events to ensure the criticality design attribute of volume is not adversely impacted.
			External Events (Tornado)	Components shall be protected from tornado events to ensure the criticality design attribute of volume is not adversely impacted.
			External Events (Local Intense Precipitation)	Components shall be protected from local intense precipitation events to ensure the criticality design attribute of volume is not adversely impacted.
			External Events (External Fire)	Components shall be protected from external fire events to ensure the criticality design attribute of volume is not adversely impacted.
			External Events (Snow/Ice)	Components shall be protected from external ice/snow events to ensure the criticality design attribute of volume is not adversely impacted.
				Double Contingency Principle is satisfied as follows. The geometry is criticality safe and no single credible event or failure has been identified whereby the geometry could become unsafe. The enrichment is also controlled such that no single credible failure could result in loss of enrichment control.
Miscellaneous Effluent Piping (largest pipe ID in system))	LOSS OF SAFE-BY-DESIGN ATTRIBUTE	**DIAMETER** 24.4 cm (ID) Keff = 1.0 @ 6 wt %		Based on qualitative assessment, there is margin between the parameter values at normal operating conditions of pipe diameter, amount of ^{235}U and enrichment and the conservative design/analysis values for these parameters assumed for criticality.
			More Heat	Based on qualitative assessment, it is highly unlikely for a process deviation to result in a more heat condition that would cause an approach to the critical safe diameter and to adversely affect the maintenance of margin to criticality associated with design and maximum operating parameter values for amount of ^{235}U and enrichment.
			More Pressure	Based on qualitative assessment, it is highly unlikely for a process deviation to result in a more pressure condition that would cause an approach to the critical safe diameter and to adversely affect the maintenance of margin to criticality associated with design and maximum operating parameter values for amount of ^{235}U and enrichment.
			Corrosion/ Erosion	Based on qualitative assessment, it is highly unlikely for a process deviation to result in a corrosion/erosion condition that would cause an approach to the critical safe diameter. Materials are corrosion/erosion resistant and postulated complete wall erosion would not exceed the critical safe diameter.

Table 3.7-14 Liquid Effluent Collection and Treatment System

Criticality Assessment of Passive Safe-By-Design Components				
Component Description (A)	**Sequence ID (B)**	**Critical Design Attribute (C)**	**Review of Up-Set Conditions to Change Geometry (Applicable HAZOP Guidewords) (D)**	**Notes/Comments (E)**
			Loss of Confinement or Leakage	Piping system shall be protected from loss of confinement or leakage with a confinement area to ensure subcriticality.
			Fire	Components shall be protected from fire to ensure the critical design attribute of diameter is not adversely impacted.
			Maintenance	Configuration Management shall ensure that maintenance does not adversely impact the critical design attribute of diameter.
			Impact/Drop	Components shall be protected from impact/drop to ensure the criticality design attribute of diameter is not adversely impacted.
			External Events (Construction on Site)	Components shall be protected from construction on-Site to ensure the criticality design attribute of diameter is not adversely impacted.
			External Events (Failure of Above-Ground Liquid Storage Tanks)	Components shall be protected from external flooding (Failure of Above-Ground Liquid Storage Tanks) to ensure the criticality design attribute of diameter is not adversely impacted.
			External Events (Hurricane)	Components shall be protected from hurricane events to ensure the criticality design attribute of diameter is not adversely impacted.
			External Events (Seismic)	Components shall be protected from seismic events to ensure the criticality design attribute of diameter is not adversely impacted.
			External Events (Tornado)	Components shall be protected from tornado events to ensure the criticality design attribute of diameter is not adversely impacted.
			External Events (Local Intense Precipitation)	Components shall be protected from local intense precipitation events to ensure the criticality design attribute of diameter is not adversely impacted.
			External Events (External Fire)	Components shall be protected from external fire events to ensure the criticality design attribute of diameter is not adversely impacted.
			External Events (Snow/Ice)	Components shall be protected from external ice/snow events to ensure the criticality design attribute of diameter is not adversely impacted.
				Double Contingency Principle is satisfied as follows. The geometry is criticality safe and no single credible event or failure has been identified whereby the geometry could become unsafe. The enrichment is also controlled such that no single credible failure could result in loss of enrichment control.

Table 3.7-14 Liquid Effluent Collection and Treatment System

Criticality Assessment of Passive Safe-By-Design Components				
Component Description (A)	**Sequence ID (B)**	**Critical Design Attribute (C)**	**Review of Up-Set Conditions to Change Geometry (Applicable HAZOP Guidewords) (D)**	**Notes/Comments (E)**
Miscellaneous Effluent Piping Arrangement	LOSS OF SAFE-BY-DESIGN ATTRIBUTE	**PHYSICAL ARRANGEMENT**		Based on qualitative assessment, there is margin between the normal operating conditions and the conservative design/analysis conditions assumed for criticality.
			More Heat	Based on qualitative assessment, it is highly unlikely for a process deviation to result in a more heat condition that would adversely affect the maintenance of margin to criticality associated with design and maximum operating parameter values for amount of ^{235}U and enrichment.
			More Pressure	Based on qualitative assessment, it is highly unlikely for a process deviation to result in a more pressure condition that would adversely affect the maintenance of margin to criticality associated with design and maximum operating parameter values for amount of ^{235}U and enrichment.
			Corrosion/ Erosion	Based on qualitative assessment, it is highly unlikely for a process deviation to result in a corrosion/erosion condition that would affect the maintenance of margin to criticality associated with design and maximum operating parameter values for physical arrangement.
			Loss of Confinement or Leakage	Piping system shall be protected from loss of confinement or leakage with a confinement area to ensure subcriticality.
			Fire	Components shall be protected from fire to ensure the critical design attribute of physical arrangement is not adversely impacted.
			Maintenance	Configuration Management shall ensure that maintenance does not adversely impact the critical design attribute of physical arrangement.
			Impact/Drop	Components shall be protected from impact/drop to ensure the critical design attribute of physical arrangement is not adversely impacted.
			External Events (Construction on Site)	Components shall be protected from construction on-Site to ensure the critical design attribute of physical arrangement is not adversely impacted.
			External Events (Failure of Above-Ground Liquid Storage Tanks)	Components shall be protected from external flooding (Failure of Above-Ground Liquid Storage Tanks) to ensure the critical design attribute of physical arrangement is not adversely impacted.
			External Events (Hurricane)	Components shall be protected from hurricane events to ensure the critical design attribute of physical arrangement is not adversely impacted.
			External Events (Seismic)	Components shall be protected from seismic events to ensure the critical design attribute of physical arrangement is not adversely impacted.
			External Events (Tornado)	Components shall be protected from tornado events to ensure the critical design attribute of physical arrangement is not adversely impacted.
			External Events (Local Intense Precipitation)	Components shall be protected from local intense precipitation events to ensure the critical design attribute of physical arrangement is not adversely impacted.

Table 3.7-14 Liquid Effluent Collection and Treatment System

Criticality Assessment of Passive Safe-By-Design Components				
Component Description (A)	**Sequence ID (B)**	**Critical Design Attribute (C)**	**Review of Up-Set Conditions to Change Geometry (Applicable HAZOP Guidewords) (D)**	**Notes/Comments (E)**
			External Events (External Fire)	Components shall be protected from external fire events to ensure the critical design attribute of physical arrangement is not adversely impacted.
			External Events (Snow/Ice)	Components shall be protected from external ice/snow events to ensure the critical design attribute of physical arrangement is not adversely impacted.
				Double Contingency Principle is satisfied as follows. The geometry is criticality safe and no single credible event or failure has been identified whereby the geometry could become unsafe. The enrichment is also controlled such that no single credible failure could result in loss of enrichment control.
Precipitation Treatment Tank Filter Press Feed Pump	LOSS OF SAFE-BY-DESIGN ATTRIBUTE	**VOLUME** 24 liters Keff = 1.0 @ 6 wt %		Based on qualitative assessment, there is margin between the parameter values at normal operating conditions of Precipitation Treatment Tank Filter Press Feed Pump volume, amount of ^{235}U and enrichment and the conservative design/analysis values for these parameters assumed for criticality.
			More Heat	Based on qualitative assessment, it is highly unlikely for a process deviation to result in a more heat condition that would cause an approach to the critical safe volume and to adversely affect the maintenance of margin to criticality associated with design and maximum operating parameter values for amount of ^{235}U and enrichment.
			More Pressure	Based on qualitative assessment, it is highly unlikely for a process deviation to result in a more pressure condition that would cause an approach to the critical safe volume and to adversely affect the maintenance of margin to criticality associated with design and maximum operating parameter values for amount of ^{235}U and enrichment.
			Corrosion/ Erosion	Based on qualitative assessment, it is highly unlikely for a process deviation to result in a corrosion/erosion condition that would cause an approach to the critical safe volume. Materials are corrosion/erosion resistant and postulated complete wall erosion would not exceed the critical safe volume.
			Loss of Confinement or Leakage	Precipitation Treatment Tank Filter Press Feed Pump shall be protected from loss of confinement or leakage with a confinement area to ensure subcriticality.
			Fire	Components shall be protected from fire to ensure the critical design attribute of volume is not adversely impacted.
			Maintenance	Configuration Management shall ensure that maintenance does not adversely impact the critical design attribute of volume.
			Impact/Drop	Components shall be protected from impact/drop to ensure the criticality design attribute of volume is not adversely impacted.
			External Events (Construction on Site)	Components shall be protected from construction on-Site to ensure the criticality design attribute of volume is not adversely impacted.

Table 3.7-14 Liquid Effluent Collection and Treatment System

Criticality Assessment of Passive Safe-By-Design Components				
Component Description (A)	**Sequence ID (B)**	**Critical Design Attribute (C)**	**Review of Up-Set Conditions to Change Geometry (Applicable HAZOP Guidewords) (D)**	**Notes/Comments (E)**
			External Events (Failure of Above-Ground Liquid Storage Tanks)	Components shall be protected from external flooding (Failure of Above-Ground Liquid Storage Tanks) to ensure the criticality design attribute of volume is not adversely impacted.
			External Events (Hurricane)	Components shall be protected from hurricane events to ensure the criticality design attribute of volume is not adversely impacted.
			External Events (Seismic)	Components shall be protected from seismic events to ensure the criticality design attribute of volume is not adversely impacted.
			External Events (Tornado)	Components shall be protected from tornado events to ensure the criticality design attribute of volume is not adversely impacted.
			External Events (Local Intense Precipitation)	Components shall be protected from local intense precipitation events to ensure the criticality design attribute of volume is not adversely impacted.
			External Events (External Fire)	Components shall be protected from external fire events to ensure the criticality design attribute of volume is not adversely impacted.
			External Events (Snow/Ice)	Components shall be protected from external ice/snow events to ensure the criticality design attribute of volume is not adversely impacted.
				Double Contingency Principle is satisfied as follows. The geometry is criticality safe and no single credible event or failure has been identified whereby the geometry could become unsafe. The enrichment is also controlled such that no single credible failure could result in loss of enrichment control.
Precipitation Treatment Tank Transfer Pump	LOSS OF SAFE-BY-DESIGN ATTRIBUTE	**VOLUME** 24 liters Keff = 1.0 @ 6 wt %		Based on qualitative assessment, there is margin between the parameter values at normal operating conditions of Precipitation Treatment Tank Transfer Pump volume, amount of ^{235}U and enrichment and the conservative design/analysis values for these parameters assumed for criticality.
			More Heat	Based on qualitative assessment, it is highly unlikely for a process deviation to result in a more heat condition that would cause an approach to the critical safe volume and to adversely affect the maintenance of margin to criticality associated with design and maximum operating parameter values for amount of ^{235}U and enrichment.
			More Pressure	Based on qualitative assessment, it is highly unlikely for a process deviation to result in a more pressure condition that would cause an approach to the critical safe volume and to adversely affect the maintenance of margin to criticality associated with design and maximum operating parameter values for amount of ^{235}U and enrichment.
			Corrosion/ Erosion	Based on qualitative assessment, it is highly unlikely for a process deviation to result in a corrosion/erosion condition that would cause an approach to the critical safe volume. Materials are corrosion/erosion resistant and postulated complete wall erosion would not exceed the critical safe volume.

Table 3.7-14 Liquid Effluent Collection and Treatment System

Criticality Assessment of Passive Safe-By-Design Components				
Component Description (A)	**Sequence ID (B)**	**Critical Design Attribute (C)**	**Review of Up-Set Conditions to Change Geometry (Applicable HAZOP Guidewords) (D)**	**Notes/Comments (E)**
			Loss of Confinement or Leakage	Precipitation Treatment Tank Transfer Pump shall be protected from loss of confinement or leakage with a confinement area to ensure subcriticality.
			Fire	Components shall be protected from fire to ensure the critical design attribute of volume is not adversely impacted.
			Maintenance	Configuration Management shall ensure that maintenance does not adversely impact the critical design attribute of volume.
			Impact/Drop	Components shall be protected from impact/drop to ensure the criticality design attribute of volume is not adversely impacted.
			External Events (Construction on Site)	Components shall be protected from construction on-Site to ensure the criticality design attribute of volume is not adversely impacted.
			External Events (Failure of Above-Ground Liquid Storage Tanks)	Components shall be protected from external flooding (Failure of Above-Ground Liquid Storage Tanks) to ensure the criticality design attribute of volume is not adversely impacted.
			External Events (Hurricane)	Components shall be protected from hurricane events to ensure the criticality design attribute of volume is not adversely impacted.
			External Events (Seismic)	Components shall be protected from seismic events to ensure the criticality design attribute of volume is not adversely impacted.
			External Events (Tornado)	Components shall be protected from tornado events to ensure the criticality design attribute of volume is not adversely impacted.
			External Events (Local Intense Precipitation)	Components shall be protected from local intense precipitation events to ensure the criticality design attribute of volume is not adversely impacted.
			External Events (External Fire)	Components shall be protected from external fire events to ensure the Criticality Design is not adversely impacted.
			External Events (Snow/Ice)	Components shall be protected from external ice/snow events to ensure the criticality design attribute of volume is not adversely impacted.
				Double Contingency Principle is satisfied as follows. The geometry is criticality safe and no single credible event or failure has been identified whereby the geometry could become unsafe. The enrichment is also controlled such that no single credible failure could result in loss of enrichment control.

Table 3.7-14 Liquid Effluent Collection and Treatment System

Criticality Assessment of Passive Safe-By-Design Components				
Component Description (A)	**Sequence ID (B)**	**Critical Design Attribute (C)**	**Review of Up-Set Conditions to Change Geometry (Applicable HAZOP Guidewords) (D)**	**Notes/Comments (E)**
Curbed Area, Liquid Effluent Collect and Treatment Room	LOSS OF SAFE-BY-DESIGN ATTRIBUTE	**SLAB** 11.5 cm Keff = 1.0 @ 6 wt %		Based on qualitative assessment, there is margin between the parameter values at normal operating conditions of the curb area shape, amount of ^{235}U and enrichment and the conservative design/analysis values for these parameters assumed for criticality.
			More Heat	Based on qualitative assessment, it is highly unlikely for a process deviation to result in a more heat condition that would cause an approach to the critical safe shape and to adversely affect the maintenance of margin to criticality associated with design and maximum operating parameter values for amount of ^{235}U and enrichment.
			More Pressure	Based on qualitative assessment, it is highly unlikely for a process deviation to result in a more pressure condition that would cause an approach to the critical safe shape and to adversely affect the maintenance of margin to criticality associated with design and maximum operating parameter values for amount of ^{235}U and enrichment.
			Corrosion/ Erosion	Based on qualitative assessment, it is highly unlikely for a process deviation to result in a corrosion/erosion condition that would cause an approach to the critical safe shape.
			Loss of Confinement or Leakage	Based on qualitative assessment, postulated loss of the curbed area confinement or leakage will not result in any appreciable accumulation of ^{235}U material because of the robust construction of the curbed area.
			Fire	Components shall be protected from fire to ensure the critical design attribute of shape is not adversely impacted.
			Maintenance	Configuration Management shall ensure that maintenance does not adversely impact the critical design attribute of shape.
			Impact/Drop	Components shall be protected from impact/drop to ensure the criticality design attribute of shape is not adversely impacted.
			External Events (Construction on Site)	Components shall be protected from construction on-Site to ensure the criticality design attribute of shape is not adversely impacted.
			External Events (Failure of Above-Ground Liquid Storage Tanks)	Components shall be protected from external flooding (Failure of Above-Ground Liquid Storage Tanks) to ensure the criticality design attribute of shape is not adversely impacted.
			External Events (Hurricane)	Components shall be protected from hurricane events to ensure the criticality design attribute of shape is not adversely impacted.
			External Events (Seismic)	Components shall be protected from seismic events to ensure the criticality design attribute of shape is not adversely impacted.
			External Events (Tornado)	Components shall be protected from tornado events to ensure the criticality design attribute of shape is not adversely impacted.

Table 3.7-14 Liquid Effluent Collection and Treatment System

Criticality Assessment of Passive Safe-By-Design Components				
Component Description (A)	**Sequence ID (B)**	**Critical Design Attribute (C)**	**Review of Up-Set Conditions to Change Geometry (Applicable HAZOP Guidewords) (D)**	**Notes/Comments (E)**
			External Events (Local Intense Precipitation)	Components shall be protected from local intense precipitation events to ensure the criticality design attribute of shape is not adversely impacted.
			External Events (External Fire)	Components shall be protected from external fire events to ensure the criticality design attribute of shape is not adversely impacted.
			External Events (Snow/Ice)	Components shall be protected from external ice/snow events to ensure the criticality design attribute of shape is not adversely impacted.
				Double Contingency Principle is satisfied as follows. The geometry is criticality safe and no single credible event or failure has been identified whereby the geometry could become unsafe. The enrichment is also controlled such that no single credible failure could result in loss of enrichment control.

Column Descriptions:

Column A: This column provides a brief description of each component.

Column B: This column identifies the accident sequence associated with the passive component.

Column C: This column identifies the critical design attribute under consideration along with the conservative values used in the criticality analysis.

Column D: This column identifies the applicable guidewords from the ISA HAZOP procedure that are used to assess the criticality design margin. Additional guidewords are addressed as applicable in the detailed assessment.

Column E: This column provides any notes, comments and concluding statements.

Table 3.7-15 Solid Waste Collection System

Criticality Assessment of Passive Safe-By-Design Components				
Component Description (A)	**Sequence ID (B)**	**Critical Design Attribute (C)**	**Review of Up-Set Conditions to Change Geometry (Applicable HAZOP Guidewords) (D)**	**Notes/Comments (E)**
12 Liter Container Storage Array	LOSS OF SAFE-BY-DESIGN ATTRIBUTE	**PHYSICAL ARRANGEMENT**		Based on qualitative assessment, there is margin between the normal operating conditions and the conservative design/analysis conditions assumed for criticality.
			Corrosion/ Erosion	Based on qualitative assessment, it is highly unlikely for a process deviation to result in a corrosion/erosion condition that would affect the maintenance of margin to criticality associated with design and maximum operating parameter values.
			Fire	Components shall be protected from fire to ensure the critical design attribute of physical arrangement is not adversely impacted.
			Maintenance	Configuration Management shall ensure that maintenance does not adversely impact the critical design attribute of physical arrangement.
			Impact/Drop	Components shall be protected from impact/drop to ensure the critical design attribute of physical arrangement is not adversely impacted.
			External Events (Construction on Site)	Components shall be protected from construction on-Site to ensure the critical design attribute of physical arrangement is not adversely impacted.
			External Events (Failure of Above-Ground Liquid Storage Tanks)	Components shall be protected from external flooding (Failure of Above-Ground Liquid Storage Tanks) to ensure the critical design attribute of physical arrangement is not adversely impacted.
			External Events (Hurricane)	Components shall be protected from hurricane events to ensure the critical design attribute of physical arrangement is not adversely impacted.
			External Events (Seismic)	Components shall be protected from seismic events to ensure the critical design attribute of physical arrangement is not adversely impacted.
			External Events (Tornado)	Components shall be protected from tornado events to ensure the critical design attribute of physical arrangement is not adversely impacted.
			External Events (Local Intense Precipitation)	Components shall be protected from local intense precipitation events to ensure the critical design attribute of physical arrangement is not adversely impacted.
			External Events (External Fire)	Components shall be protected from external fire events to ensure the critical design attribute of physical arrangement is not adversely impacted.
			External Events (Snow/Ice)	Components shall be protected from external ice/snow events to ensure the critical design attribute of physical arrangement is not adversely impacted.
				Double Contingency Principle is satisfied as follows. The geometry is criticality safe and no single credible event or failure has been identified whereby the geometry could become unsafe. The enrichment is also controlled such that no single credible failure could result in loss of enrichment control.

Table 3.7-15 Solid Waste Collection System

Criticality Assessment of Passive Safe-By-Design Components				
Component Description (A)	**Sequence ID (B)**	**Critical Design Attribute (C)**	**Review of Up-Set Conditions to Change Geometry (Applicable HAZOP Guidewords) (D)**	**Notes/Comments (E)**
12 Liter Canister	LOSS OF SAFE-BY-DESIGN ATTRIBUTE	**VOLUME** 24 liters Keff = 1.0 @ 6 wt %		Based on qualitative assessment, there is margin between the parameter value at normal operating conditions of 12 Liter Canister volume and the conservative design/analysis value for this parameter assumed for criticality.
			Corrosion/ Erosion	Based on qualitative assessment, it is highly unlikely for a process deviation to result in a corrosion/erosion condition that would cause an approach to the critical safe volume. Materials are corrosion/erosion resistant and postulated complete wall erosion would not exceed the critical safe volume.
			Loss of Confinement or Leakage	Based on qualitative assessment, postulated loss of 12 Liter Canister confinement or leakage will not result in any appreciable accumulation of ^{235}U material. As a result, loss of confinement does not result in a potential for criticality and therefore its consequence is low
			Fire	Components shall be protected from fire to ensure the critical design attribute of volume is not adversely impacted.
			Maintenance	Configuration Management shall ensure that maintenance does not adversely impact the critical design attribute of volume.
				Double Contingency Principle is satisfied as follows. The geometry is criticality safe and no single credible event or failure has been identified whereby the geometry could become unsafe. The enrichment is also controlled such that no single credible failure could result in loss of enrichment control.
12 Liter Container Transport Device	LOSS OF SAFE-BY-DESIGN ATTRIBUTE	**PHYSICAL ARRANGEMENT**		Based on qualitative assessment, there is margin between the normal operating conditions and the conservative design/analysis conditions assumed for criticality.
			Corrosion/ Erosion	Based on qualitative assessment, it is highly unlikely for a process deviation to result in a corrosion/erosion condition that would affect the maintenance of margin to criticality associated with design and maximum operating parameter values for physical arrangement.
			Fire	Components shall be protected from fire to ensure the critical design attribute of physical arrangement is not adversely impacted.
			Maintenance	Configuration Management shall ensure that maintenance does not adversely impact the critical design attribute of physical arrangement.
			Impact/Drop	Components shall be protected from impact/drop to ensure the critical design attribute of physical arrangement is not adversely impacted.
			External Events (Construction on Site)	Components shall be protected from construction on-Site to ensure the critical design attribute of physical arrangement is not adversely impacted.
			External Events (Failure of Above-Ground Liquid Storage Tanks)	Components shall be protected from external flooding (Failure of Above-Ground Liquid Storage Tanks) to ensure the critical design attribute of physical arrangement is not adversely impacted.

Table 3.7-15 Solid Waste Collection System

Criticality Assessment of Passive Safe-By-Design Components				
Component Description (A)	**Sequence ID (B)**	**Critical Design Attribute (C)**	**Review of Up-Set Conditions to Change Geometry (Applicable HAZOP Guidewords) (D)**	**Notes/Comments (E)**
			External Events (Hurricane)	Components shall be protected from hurricane events to ensure the critical design attribute of physical arrangement is not adversely impacted.
			External Events (Seismic)	Components shall be protected from seismic events to ensure the critical design attribute of physical arrangement is not adversely impacted.
			External Events (Tornado)	Components shall be protected from tornado events to ensure the critical design attribute of physical arrangement is not adversely impacted.
			External Events (Local Intense Precipitation)	Components shall be protected from local intense precipitation events to ensure the critical design attribute of physical arrangement is not adversely impacted.
			External Events (External Fire)	Components shall be protected from external fire events to ensure the critical design attribute of physical arrangement is not adversely impacted.
			External Events (Snow/Ice)	Components shall be protected from external ice/snow events to ensure the critical design attribute of physical arrangement is not adversely impacted.
				Double Contingency Principle is satisfied as follows. The geometry is criticality safe and no single credible event or failure has been identified whereby the geometry could become unsafe. The enrichment is also controlled such that no single credible failure could result in loss of enrichment control.

Column Descriptions:

Column A: This column provides a brief description of each component.

Column B: This column identifies the accident sequence associated with the passive component.

Column C: This column identifies the critical design attribute under consideration along with the conservative values used in the criticality analysis.

Column D: This column identifies the applicable guidewords from the ISA HAZOP procedure that are used to assess the criticality design margin. Additional guidewords are addressed as applicable in the detailed assessment.

Column E: This column provides any notes, comments and concluding statements.

Table 3.7-16 Decontamination Workshop

Criticality Assessment of Passive Safe-By-Design Components				
Component Description (A)	**Sequence ID (B)**	**Critical Design Attribute (C)**	**Review of Up-Set Conditions to Change Geometry (Applicable HAZOP Guidewords) (D)**	**Notes/Comments (E)**
PFPE Oil Storage Array	LOSS OF SAFE-BY-DESIGN ATTRIBUTE	**PHYSICAL ARRANGEMENT**		Based on qualitative assessment, there is margin between the normal operating conditions and the conservative design/analysis conditions assumed for criticality.
			Corrosion/ Erosion	Based on qualitative assessment, it is highly unlikely for a process deviation to result in a corrosion/erosion condition that would affect the maintenance of margin to criticality associated with design and maximum operating parameter values for physical arrangement.
			Fire	Components shall be protected from fire to ensure the critical design attribute of physical arrangement is not adversely impacted.
			Maintenance	Configuration Management shall ensure that maintenance does not adversely impact the critical design attribute of physical arrangement.
			Impact/Drop	Components shall be protected from impact/drop to ensure the critical design attribute of physical arrangement is not adversely impacted.
			External Events (Construction on Site)	Components shall be protected from construction on-Site to ensure the critical design attribute of physical arrangement is not adversely impacted.
			External Events (Failure of Above-Ground Liquid Storage Tanks)	Components shall be protected from external flooding (Failure of Above-Ground Liquid Storage Tanks) to ensure the critical design attribute of physical arrangement is not adversely impacted.
			External Events (Hurricane)	Components shall be protected from hurricane events to ensure the critical design attribute of physical arrangement is not adversely impacted.
			External Events (Seismic)	Components shall be protected from seismic events to ensure the critical design attribute of physical arrangement is not adversely impacted.
			External Events (Tornado)	Components shall be protected from tornado events to ensure the critical design attribute of physical arrangement is not adversely impacted.
			External Events (Local Intense Precipitation)	Components shall be protected from local intense precipitation events to ensure the critical design attribute of physical arrangement is not adversely impacted.
			External Events (External Fire)	Components shall be protected from external fire events to ensure the critical design attribute of physical arrangement is not adversely impacted.
			External Events (Snow/Ice)	Components shall be protected from external ice/snow events to ensure the critical design attribute of physical arrangement is not adversely impacted.
				Double Contingency Principle is satisfied as follows. The geometry is criticality safe and no single credible event or failure has been identified whereby the geometry could become unsafe. The enrichment is also controlled such that no single credible failure could result in loss of enrichment control.

Table 3.7-16 Decontamination Workshop

Criticality Assessment of Passive Safe-By-Design Components				
Component Description (A)	**Sequence ID (B)**	**Critical Design Attribute (C)**	**Review of Up-Set Conditions to Change Geometry (Applicable HAZOP Guidewords) (D)**	**Notes/Comments (E)**
Product Pump Storage Array	LOSS OF SAFE-BY-DESIGN ATTRIBUTE	**PHYSICAL ARRANGEMENT**		Based on qualitative assessment, there is margin between the normal operating conditions and the conservative design/analysis conditions assumed for criticality.
			Corrosion/ Erosion	Based on qualitative assessment, it is highly unlikely for a process deviation to result in a corrosion/erosion condition that would affect the maintenance of margin to criticality associated with design and maximum operating parameter values for physical arrangement.
			Fire	Components shall be protected from fire to ensure the critical design attribute of physical arrangement is not adversely impacted.
			Maintenance	Configuration Management shall ensure that maintenance does not adversely impact the critical design attribute of physical arrangement.
			Impact/Drop	Components shall be protected from impact/drop to ensure the critical design attribute of physical arrangement is not adversely impacted.
			External Events (Construction on Site)	Components shall be protected from construction on-Site to ensure the critical design attribute of physical arrangement is not adversely impacted.
			External Events (Failure of Above-Ground Liquid Storage Tanks)	Components shall be protected from external flooding (Failure of Above-Ground Liquid Storage Tanks) to ensure the critical design attribute of physical arrangement is not adversely impacted.
			External Events (Hurricane)	Components shall be protected from hurricane events to ensure the critical design attribute of physical arrangement is not adversely impacted.
			External Events (Seismic)	Components shall be protected from seismic events to ensure the critical design attribute of physical arrangement is not adversely impacted.
			External Events (Tornado)	Components shall be protected from tornado events to ensure the critical design attribute of physical arrangement is not adversely impacted.
			External Events (Local Intense Precipitation)	Components shall be protected from local intense precipitation events to ensure the critical design attribute of physical arrangement is not adversely impacted.
			External Events (External Fire)	Components shall be protected from external fire events to ensure the critical design attribute of physical arrangement is not adversely impacted.
			External Events (Snow/Ice)	Components shall be protected from external ice/snow events to ensure the critical design attribute of physical arrangement is not adversely impacted.
				Double Contingency Principle is satisfied as follows. The geometry is criticality safe and no single credible event or failure has been identified whereby the geometry could become unsafe. The enrichment is also controlled such that no single credible failure could result in loss of enrichment control.

Table 3.7-16 Decontamination Workshop

Criticality Assessment of Passive Safe-By-Design Components				
Component Description (A)	**Sequence ID (B)**	**Critical Design Attribute (C)**	**Review of Up-Set Conditions to Change Geometry (Applicable HAZOP Guidewords) (D)**	**Notes/Comments (E)**
Oil Drip Tray	LOSS OF SAFE-BY-DESIGN ATTRIBUTE	**VOLUME** 24 liters Keff = 1.0 @ 6 wt %		Based on qualitative assessment, there is margin between the parameter value at normal operating conditions of Oil Drip Tray volume and the conservative design/analysis value for this parameter assumed for criticality.
			More Heat	Based on qualitative assessment, it is highly unlikely for a process deviation to result in a more heat condition that would cause an approach to the critical safe volume and to adversely affect the maintenance of margin to criticality associated with design and maximum operating parameter value.
			More Pressure	Based on qualitative assessment, it is highly unlikely for a process deviation to result in a more pressure condition that would cause an approach to the critical safe volume and to adversely affect the maintenance of margin to criticality associated with design and maximum operating parameter value.
			Corrosion/ Erosion	Based on qualitative assessment, it is highly unlikely for a process deviation to result in a corrosion/erosion condition that would cause an approach to the critical safe volume. Materials are corrosion/erosion resistant and postulated complete wall erosion would not exceed the critical safe volume.
			Loss of Confinement or Leakage	Based on qualitative assessment, postulated loss of Oil Drip Tray confinement or leakage will not result in any appreciable accumulation of ^{235}U material. As a result, loss of confinement does not result in a potential for criticality and therefore its consequence is low.
			Fire	Components shall be protected from fire to ensure the critical design attribute of volume is not adversely impacted.
			Maintenance	Configuration Management shall ensure that maintenance does not adversely impact the critical design attribute of volume.
				Double Contingency Principle is satisfied as follows. The geometry is criticality safe and no single credible event or failure has been identified whereby the geometry could become unsafe. The enrichment is also controlled such that no single credible failure could result in loss of enrichment control.
6 Liter Residue Container	LOSS OF SAFE-BY-DESIGN ATTRIBUTE	**VOLUME** 24 liters Keff = 1.0 @ 6 wt %		Based on qualitative assessment, there is margin between the parameter value at normal operating conditions of 6 Liter Residue Container volume and the conservative design/analysis value for this parameter assumed for criticality.
			Corrosion/ Erosion	Based on qualitative assessment, it is highly unlikely for a process deviation to result in a corrosion/erosion condition that would cause an approach to the critical safe volume. Materials are corrosion/erosion resistant and postulated complete wall erosion would not exceed the critical safe volume.

Table 3.7-16 Decontamination Workshop

Criticality Assessment of Passive Safe-By-Design Components				
Component Description (A)	**Sequence ID (B)**	**Critical Design Attribute (C)**	**Review of Up-Set Conditions to Change Geometry (Applicable HAZOP Guidewords) (D)**	**Notes/Comments (E)**
			Loss of Confinement or Leakage	Based on qualitative assessment, postulated loss of 6 Liter Residue Container confinement or leakage will not result in any appreciable accumulation of ^{235}U material. As a result, loss of confinement does not result in a potential for criticality and therefore its consequence is low.
			Fire	Components shall be protected from fire to ensure the critical design attribute of volume is not adversely impacted.
			Maintenance	Configuration Management shall ensure that maintenance does not adversely impact the critical design attribute of volume.
				Double Contingency Principle is satisfied as follows. The geometry is criticality safe and no single credible event or failure has been identified whereby the geometry could become unsafe. The enrichment is also controlled such that no single credible failure could result in loss of enrichment control.
6 Liter Residue Container Storage Array	LOSS OF SAFE-BY-DESIGN ATTRIBUTE	**PHYSICAL ARRANGEMENT**		Based on qualitative assessment, there is margin between the normal operating conditions and the conservative design/analysis conditions assumed for criticality.
			Corrosion/ Erosion	Based on qualitative assessment, it is highly unlikely for a process deviation to result in a corrosion/erosion condition that would affect the maintenance of margin to criticality associated with design and maximum operating parameter values for physical arrangement.
			Fire	Components shall be protected from fire to ensure the critical design attribute of physical arrangement is not adversely impacted.
			Maintenance	Configuration Management shall ensure that maintenance does not adversely impact the critical design attribute of physical arrangement.
			Impact/Drop	Components shall be protected from impact/drop to ensure the critical design attribute of physical arrangement is not adversely impacted.
			External Events (Construction on Site)	Components shall be protected from construction on-Site to ensure the critical design attribute of physical arrangement is not adversely impacted.
			External Events (Failure of Above-Ground Liquid Storage Tanks)	Components shall be protected from external flooding (Failure of Above-Ground Liquid Storage Tanks) to ensure the critical design attribute of physical arrangement is not adversely impacted.
			External Events (Hurricane)	Components shall be protected from hurricane events to ensure the critical design attribute of physical arrangement is not adversely impacted.
			External Events (Seismic)	Components shall be protected from seismic events to ensure the critical design attribute of physical arrangement is not adversely impacted.
			External Events (Tornado)	Components shall be protected from tornado events to ensure the critical design attribute of physical arrangement is not adversely impacted.

Table 3.7-16 Decontamination Workshop

Criticality Assessment of Passive Safe-By-Design Components				
Component Description (A)	**Sequence ID (B)**	**Critical Design Attribute (C)**	**Review of Up-Set Conditions to Change Geometry (Applicable HAZOP Guidewords) (D)**	**Notes/Comments (E)**
			External Events (Local Intense Precipitation)	Components shall be protected from local intense precipitation events to ensure the critical design attribute of physical arrangement is not adversely impacted.
			External Events (External Fire)	Components shall be protected from external fire events to ensure the critical design attribute of physical arrangement is not adversely impacted.
			External Events (Snow/Ice)	Components shall be protected from external ice/snow events to ensure the critical design attribute of physical arrangement is not adversely impacted.
				Double Contingency Principle is satisfied as follows. The geometry is criticality safe and no single credible event or failure has been identified whereby the geometry could become unsafe. The enrichment is also controlled such that no single credible failure could result in loss of enrichment control.
Flexible Hoses Storage Array	LOSS OF SAFE-BY-DESIGN ATTRIBUTE	**PHYSICAL ARRANGEMENT**		Based on qualitative assessment, there is margin between the normal operating conditions and the conservative design/analysis conditions assumed for criticality.
			Corrosion/ Erosion	Based on qualitative assessment, it is highly unlikely for a process deviation to result in a corrosion/erosion condition that would affect the maintenance of margin to criticality associated with design and maximum operating parameter values for physical arrangement.
			Fire	Components shall be protected from fire to ensure the critical design attribute of physical arrangement is not adversely impacted.
			Maintenance	Configuration Management shall ensure that maintenance does not adversely impact the critical design attribute of physical arrangement.
			Impact/Drop	Components shall be protected from impact/drop to ensure the critical design attribute of physical arrangement is not adversely impacted.
			External Events (Construction on Site)	Components shall be protected from construction on-Site to ensure the critical design attribute of physical arrangement is not adversely impacted.
			External Events (Failure of Above-Ground Liquid Storage Tanks)	Components shall be protected from external flooding (Failure of Above-Ground Liquid Storage Tanks) to ensure the critical design attribute of physical arrangement is not adversely impacted.
			External Events (Hurricane)	Components shall be protected from hurricane events to ensure the critical design attribute of physical arrangement is not adversely impacted.
			External Events (Seismic)	Components shall be protected from seismic events to ensure the critical design attribute of physical arrangement is not adversely impacted.
			External Events (Tornado)	Components shall be protected from tornado events to ensure the critical design attribute of physical arrangement is not adversely impacted.

Table 3.7-16 Decontamination Workshop

Criticality Assessment of Passive Safe-By-Design Components				
Component Description (A)	**Sequence ID (B)**	**Critical Design Attribute (C)**	**Review of Up-Set Conditions to Change Geometry (Applicable HAZOP Guidewords) (D)**	**Notes/Comments (E)**
			External Events (Local Intense Precipitation)	Components shall be protected from local intense precipitation events to ensure the critical design attribute of physical arrangement is not adversely impacted.
			External Events (External Fire)	Components shall be protected from external fire events to ensure the critical design attribute of physical arrangement is not adversely impacted.
			External Events (Snow/Ice)	Components shall be protected from external ice/snow events to ensure the critical design attribute of physical arrangement is not adversely impacted.
				Double Contingency Principle is satisfied as follows. The geometry is criticality safe and no single credible event or failure has been identified whereby the geometry could become unsafe. The enrichment is also controlled such that no single credible failure could result in loss of enrichment control.
Citric Acid Holding Tank (Decon System for Flexibles)	LOSS OF SAFE-BY-DESIGN ATTRIBUTE	**SLAB** 11.5 cm Keff = 1.0 @ 6 wt %		Based on qualitative assessment, there is margin between the parameter values at normal operating conditions of Citric Acid Holding Tank (Decontamination System for Flexibles) shape, amount of ^{235}U and enrichment and the conservative design/analysis values for these parameters assumed for criticality.
			More Heat	Based on qualitative assessment, it is highly unlikely for a process deviation to result in a more heat condition that would cause an approach to the critical safe shape and to adversely affect the maintenance of margin to criticality associated with design and maximum operating parameter values for amount of ^{235}U and enrichment.
			More Pressure	Based on qualitative assessment, it is highly unlikely for a process deviation to result in a more pressure condition that would cause an approach to the critical safe shape and to adversely affect the maintenance of margin to criticality associated with design and maximum operating parameter values for amount of ^{235}U and enrichment.
			Corrosion/ Erosion	Based on qualitative assessment, it is highly unlikely for a process deviation to result in a corrosion/erosion condition that would cause an approach to the critical safe shape. Materials are corrosion/erosion resistant.
			Loss of Confinement or Leakage	Citric Acid Holding Tank (Decontamination System for Flexibles) shall be protected from loss of confinement or leakage with a confinement area (Flexible Hose Decontamination Cabinet) to ensure the critical design.
			Fire	Components shall be protected from fire to ensure the critical design attribute of shape is not adversely impacted.
			Maintenance	Configuration Management shall ensure that maintenance does not adversely impact the critical design attribute of shape.
			Impact/Drop	Components shall be protected from impact/drop to ensure the criticality design attribute of shape is not adversely impacted.
			External Events (Construction on Site)	Components shall be protected from construction on-Site to ensure the criticality design attribute of shape is not adversely impacted.

Table 3.7-16 Decontamination Workshop

Criticality Assessment of Passive Safe-By-Design Components				
Component Description (A)	**Sequence ID (B)**	**Critical Design Attribute (C)**	**Review of Up-Set Conditions to Change Geometry (Applicable HAZOP Guidewords) (D)**	**Notes/Comments (E)**
			External Events (Failure of Above-Ground Liquid Storage Tanks)	Components shall be protected from external flooding (Failure of Above-Ground Liquid Storage Tanks) to ensure the criticality design attribute of shape is not adversely impacted.
			External Events (Hurricane)	Components shall be protected from hurricane events to ensure the criticality design attribute of shape is not adversely impacted.
			External Events (Seismic)	Components shall be protected from seismic events to ensure the criticality design attribute of shape is not adversely impacted.
			External Events (Tornado)	Components shall be protected from tornado events to ensure the criticality design attribute of shape is not adversely impacted.
			External Events (Local Intense Precipitation)	Components shall be protected from local intense precipitation events to ensure the criticality design attribute of shape is not adversely impacted.
			External Events (External Fire)	Components shall be protected from external fire events to ensure the criticality design attribute of shape is not adversely impacted.
			External Events (Snow/Ice)	Components shall be protected from external ice/snow events to ensure the criticality design attribute of shape is not adversely impacted.
				Double Contingency Principle is satisfied as follows. The geometry is criticality safe and no single credible event or failure has been identified whereby the geometry could become unsafe. The enrichment is also controlled such that no single credible failure could result in loss of enrichment control.
Vacuum Cleaner	LOSS OF SAFE-BY-DESIGN ATTRIBUTE	**DIAMETER** 24.4 cm (ID) Keff = 1.0 @ 6 wt %		Based on qualitative assessment, there is margin between the parameter value at normal operating conditions of Vacuum Cleaner diameter and the conservative design/analysis value for this parameter assumed for criticality.
			More Heat	Based on qualitative assessment, it is highly unlikely for a process deviation to result in a more heat condition that would cause an approach to the critical safe diameter and to adversely affect the maintenance of margin to criticality associated with design and maximum operating parameter value.
			More Pressure	Based on qualitative assessment, it is highly unlikely for a process deviation to result in a more pressure condition that would cause an approach to the critical safe diameter and to adversely affect the maintenance of margin to criticality associated with design and maximum operating parameter value.
			Corrosion/ Erosion	Based on qualitative assessment, it is highly unlikely for a process deviation to result in a corrosion/erosion condition that would cause an approach to the critical safe diameter. Materials are corrosion/erosion resistant and postulated complete wall erosion would not exceed the critical safe diameter.

Table 3.7-16 Decontamination Workshop

Criticality Assessment of Passive Safe-By-Design Components				
Component Description (A)	**Sequence ID (B)**	**Critical Design Attribute (C)**	**Review of Up-Set Conditions to Change Geometry (Applicable HAZOP Guidewords) (D)**	**Notes/Comments (E)**
			Loss of Confinement or Leakage	Based on qualitative assessment, postulated loss of Vacuum Cleaner confinement or leakage will not result in any appreciable accumulation of ^{235}U. As a result, loss of confinement does not result in a potential for criticality and therefore its consequence is low.
			Fire	Components shall be protected from fire to ensure the critical design attribute of diameter is not adversely impacted.
			Maintenance	Configuration Management shall ensure that maintenance does not adversely impact the critical design attribute of diameter.
			Impact/Drop	Components shall be protected from Impact/Drop to ensure the critical design attribute of diameter is not adversely impacted.
			External Events (Construction on Site)	Components shall be protected from Construction on Site to ensure the critical design attribute of diameter is not adversely impacted.
			External Events (Failure of Above-Ground Liquid Tanks)	Components shall be protected from Failure of Above-Ground Liquid Tanks to ensure the critical design attribute of diameter is not adversely impacted.
			External Events (Hurricane)	Components shall be protected from Hurricane events to ensure the critical design attribute of diameter is not adversely impacted.
			External Events (Seismic)	Components shall be protected from Seismic events to ensure the critical design attribute of diameter is not adversely impacted.
			External Events (Tornado)	Components shall be protected from Tornado events to ensure the critical design attribute of diameter is not adversely impacted.
			External Events (Local Intense Precipitation)	Components shall be protected from Local Intense Precipitation events to ensure the critical design attribute of diameter is not adversely impacted.
			External Events (Snow/Ice)	Components shall be protected from Snow/Ice events to ensure the critical design attribute of diameter is not adversely impacted.
				Double Contingency Principle is satisfied as follows. The geometry is criticality safe and no single credible event or failure has been identified whereby the geometry could become unsafe. The enrichment is also controlled such that no single credible failure could result in loss of enrichment control.

Table 3.7-16 Decontamination Workshop

Criticality Assessment of Passive Safe-By-Design Components				
Component Description (A)	**Sequence ID (B)**	**Critical Design Attribute (C)**	**Review of Up-Set Conditions to Change Geometry (Applicable HAZOP Guidewords) (D)**	**Notes/Comments (E)**
Sample Bottle Wash Drip Tray	LOSS OF SAFE-BY-DESIGN ATTRIBUTE	**SLAB** 11.5 cm Keff = 1.0 @ 6 wt %		Based on qualitative assessment, there is margin between the parameter values at normal operating conditions of Sample Bottle Wash Drip Tray shape, amount of ^{235}U and enrichment and the conservative design/analysis values for these parameters assumed for criticality.
			More Heat	Based on qualitative assessment, it is highly unlikely for a process deviation to result in a more heat condition that would cause an approach to the critical safe shape and to adversely affect the maintenance of margin to criticality associated with design and maximum operating parameter values for amount of ^{235}U and enrichment.
			More Pressure	Based on qualitative assessment, it is highly unlikely for a process deviation to result in a more pressure condition that would cause an approach to the critical safe shape and to adversely affect the maintenance of margin to criticality associated with design and maximum operating parameter values for amount of ^{235}U and enrichment.
			Corrosion/ Erosion	Based on qualitative assessment, it is highly unlikely for a process deviation to result in a corrosion/erosion condition that would cause an approach to the critical safe shape. Materials are corrosion/erosion resistant.
			Loss of Confinement or Leakage	Sample Bottle Wash Drip Tray shall be protected from loss of confinement or leakage with a confinement area (Sample Bottle Decontamination Cabinet) to ensure subcriticality.
			Fire	Components shall be protected from fire to ensure the critical design attribute of shape is not adversely impacted.
			Maintenance	Configuration Management shall ensure that maintenance does not adversely impact the critical design attribute of shape.
			Impact/Drop	Components shall be protected from impact/drop to ensure the criticality design attribute of shape is not adversely impacted.
			External Events (Construction on Site)	Components shall be protected from construction on-Site to ensure the criticality design attribute of shape is not adversely impacted.
			External Events (Failure of Above-Ground Liquid Storage Tanks)	Components shall be protected from external flooding (Failure of Above-Ground Liquid Storage Tanks) to ensure the criticality design attribute of shape is not adversely impacted.
			External Events (Hurricane)	Components shall be protected from hurricane events to ensure the criticality design attribute of shape is not adversely impacted.
			External Events (Seismic)	Components shall be protected from seismic events to ensure the criticality design attribute of shape is not adversely impacted.
			External Events (Tornado)	Components shall be protected from tornado events to ensure the criticality design attribute of shape is not adversely impacted.
			External Events (Local Intense Precipitation)	Components shall be protected from local intense precipitation events to ensure the criticality design attribute of shape is not adversely impacted.

Table 3.7-16 Decontamination Workshop

Criticality Assessment of Passive Safe-By-Design Components				
Component Description (A)	**Sequence ID (B)**	**Critical Design Attribute (C)**	**Review of Up-Set Conditions to Change Geometry (Applicable HAZOP Guidewords) (D)**	**Notes/Comments (E)**
			External Events (External Fire)	Components shall be protected from external fire events to ensure the criticality design attribute of shape is not adversely impacted.
			External Events (Snow/Ice)	Components shall be protected from external ice/snow events to ensure the criticality design attribute of shape is not adversely impacted.
				Double Contingency Principle is satisfied as follows. The geometry is criticality safe and no single credible event or failure has been identified whereby the geometry could become unsafe. The enrichment is also controlled such that no single credible failure could result in loss of enrichment control.
PFPE Oil 6 Liter Container	LOSS OF SAFE-BY-DESIGN ATTRIBUTE	**VOLUME** 24 liters Keff = 1.0 @ 6 wt %		Based on qualitative assessment, there is margin between the parameter value at normal operating conditions of 6 Liter Residue Container volume and the conservative design/analysis value for this parameter assumed for criticality.
			Corrosion/ Erosion	Based on qualitative assessment, it is highly unlikely for a process deviation to result in a corrosion/erosion condition that would cause an approach to the critical safe volume. Materials are corrosion/erosion resistant and postulated complete wall erosion would not exceed the critical safe volume.
			Loss of Confinement or Leakage	Based on qualitative assessment, postulated loss of 6 Liter Residue Container confinement or leakage will not result in any appreciable accumulation of ^{235}U material. As a result, loss of confinement does not result in a potential for criticality and therefore its consequence is low.
			Fire	Components shall be protected from fire to ensure the critical design attribute of volume is not adversely impacted.
			Maintenance	Configuration Management shall ensure that maintenance does not adversely impact the critical design attribute of volume.
				Double Contingency Principle is satisfied as follows. The geometry is criticality safe and no single credible event or failure has been identified whereby the geometry could become unsafe. The enrichment is also controlled such that no single credible failure could result in loss of enrichment control.
Product Pump Transport Device	LOSS OF SAFE-BY-DESIGN ATTRIBUTE	**PHYSICAL ARRANGEMENT**		Based on qualitative assessment, there is margin between the normal operating conditions and the conservative design/analysis conditions assumed for criticality.
			Corrosion/ Erosion	Based on qualitative assessment, it is highly unlikely for a process deviation to result in a corrosion/erosion condition that would affect the maintenance of margin to criticality associated with design and maximum operating parameter values for physical arrangement.
			Fire	Components shall be protected from fire to ensure the critical design attribute of physical arrangement is not adversely impacted.

Table 3.7-16 Decontamination Workshop

Criticality Assessment of Passive Safe-By-Design Components				
Component Description (A)	**Sequence ID (B)**	**Critical Design Attribute (C)**	**Review of Up-Set Conditions to Change Geometry (Applicable HAZOP Guidewords) (D)**	**Notes/Comments (E)**
			Maintenance	Configuration Management shall ensure that maintenance does not adversely impact the critical design attribute of physical arrangement.
			Impact/Drop	Components shall be protected from impact/drop to ensure the critical design attribute of physical arrangement is not adversely impacted.
			External Events (Construction on Site)	Components shall be protected from construction on-Site to ensure the critical design attribute of physical arrangement is not adversely impacted.
			External Events (Failure of Above-Ground Liquid Storage Tanks)	Components shall be protected from external flooding (Failure of Above-Ground Liquid Storage Tanks) to ensure the critical design attribute of physical arrangement is not adversely impacted.
			External Events (Hurricane)	Components shall be protected from hurricane events to ensure the critical design attribute of physical arrangement is not adversely impacted.
			External Events (Seismic)	Components shall be protected from seismic events to ensure the critical design attribute of physical arrangement is not adversely impacted.
			External Events (Tornado)	Components shall be protected from tornado events to ensure the critical design attribute of physical arrangement is not adversely impacted.
			External Events (Local Intense Precipitation)	Components shall be protected from local intense precipitation events to ensure the critical design attribute of physical arrangement is not adversely impacted.
			External Events (External Fire)	Components shall be protected from external fire events to ensure the critical design attribute of physical arrangement is not adversely impacted.
			External Events (Snow/Ice)	Components shall be protected from external ice/snow events to ensure the critical design attribute of physical arrangement is not adversely impacted.
				Double Contingency Principle is satisfied as follows. The geometry is criticality safe and no single credible event or failure has been identified whereby the geometry could become unsafe. The enrichment is also controlled such that no single credible failure could result in loss of enrichment control.
Residue Container Transport Device	LOSS OF SAFE-BY-DESIGN ATTRIBUTE	**PHYSICAL ARRANGEMENT**		Based on qualitative assessment, there is margin between the normal operating conditions and the conservative design/analysis conditions assumed for criticality.
			Corrosion/ Erosion	Based on qualitative assessment, it is highly unlikely for a process deviation to result in a corrosion/erosion condition that would affect the maintenance of margin to criticality associated with design and maximum operating parameter values for physical arrangement.
			Fire	Components shall be protected from fire to ensure the critical design attribute of physical arrangement is not adversely impacted.

Table 3.7-16 Decontamination Workshop

Criticality Assessment of Passive Safe-By-Design Components				
Component Description (A)	**Sequence ID (B)**	**Critical Design Attribute (C)**	**Review of Up-Set Conditions to Change Geometry (Applicable HAZOP Guidewords) (D)**	**Notes/Comments (E)**
			Maintenance	Configuration Management shall ensure that maintenance does not adversely impact the critical design attribute of physical arrangement.
			Impact/Drop	Components shall be protected from impact/drop to ensure the critical design attribute of physical arrangement is not adversely impacted.
			External Events (Construction on Site)	Components shall be protected from construction on-Site to ensure the critical design attribute of physical arrangement is not adversely impacted.
			External Events (Failure of Above-Ground Liquid Storage Tanks)	Components shall be protected from external flooding (Failure of Above-Ground Liquid Storage Tanks) to ensure the critical design attribute of physical arrangement is not adversely impacted.
			External Events (Hurricane)	Components shall be protected from hurricane events to ensure the critical design attribute of physical arrangement is not adversely impacted.
			External Events (Seismic)	Components shall be protected from seismic events to ensure the critical design attribute of physical arrangement is not adversely impacted.
			External Events (Tornado)	Components shall be protected from tornado events to ensure the critical design attribute of physical arrangement is not adversely impacted.
			External Events (Local Intense Precipitation)	Components shall be protected from local intense precipitation events to ensure the critical design attribute of physical arrangement is not adversely impacted.
			External Events (External Fire)	Components shall be protected from external fire events to ensure the critical design attribute of physical arrangement is not adversely impacted.
			External Events (Snow/Ice)	Components shall be protected from external ice/snow events to ensure the critical design attribute of physical arrangement is not adversely impacted.
				Double Contingency Principle is satisfied as follows. The geometry is criticality safe and no single credible event or failure has been identified whereby the geometry could become unsafe. The enrichment is also controlled such that no single credible failure could result in loss of enrichment control.
Flexible Hose Transport Device	LOSS OF SAFE-BY-DESIGN ATTRIBUTE	**PHYSICAL ARRANGEMENT**		Based on qualitative assessment, there is margin between the normal operating conditions and the conservative design/analysis conditions assumed for criticality.
			Corrosion/ Erosion	Based on qualitative assessment, it is highly unlikely for a process deviation to result in a corrosion/erosion condition that would affect the maintenance of margin to criticality associated with design and maximum operating parameter values for physical arrangement.
			Fire	Components shall be protected from fire to ensure the critical design attribute of physical arrangement is not adversely impacted.

Table 3.7-16 Decontamination Workshop

Criticality Assessment of Passive Safe-By-Design Components				
Component Description (A)	**Sequence ID (B)**	**Critical Design Attribute (C)**	**Review of Up-Set Conditions to Change Geometry (Applicable HAZOP Guidewords) (D)**	**Notes/Comments (E)**
			Maintenance	Configuration Management shall ensure that maintenance does not adversely impact the critical design attribute of physical arrangement.
			Impact/Drop	Components shall be protected from impact/drop to ensure the critical design attribute of physical arrangement is not adversely impacted.
			External Events (Construction on Site)	Components shall be protected from construction on-Site to ensure the critical design attribute of physical arrangement is not adversely impacted.
			External Events (Failure of Above-Ground Liquid Storage Tanks)	Components shall be protected from external flooding (Failure of Above-Ground Liquid Storage Tanks) to ensure the critical design attribute of physical arrangement is not adversely impacted.
			External Events (Hurricane)	Components shall be protected from hurricane events to ensure the critical design attribute of physical arrangement is not adversely impacted.
			External Events (Seismic)	Components shall be protected from seismic events to ensure the critical design attribute of physical arrangement is not adversely impacted.
			External Events (Tornado)	Components shall be protected from tornado events to ensure the critical design attribute of physical arrangement is not adversely impacted.
			External Events (Local Intense Precipitation)	Components shall be protected from local intense precipitation events to ensure the critical design attribute of physical arrangement is not adversely impacted.
			External Events (External Fire)	Components shall be protected from external fire events to ensure the critical design attribute of physical arrangement is not adversely impacted.
			External Events (Snow/Ice)	Components shall be protected from external ice/snow events to ensure the critical design attribute of physical arrangement is not adversely impacted.
				Double Contingency Principle is satisfied as follows. The geometry is criticality safe and no single credible event or failure has been identified whereby the geometry could become unsafe. The enrichment is also controlled such that no single credible failure could result in loss of enrichment control.
Flexible Hose Decontamination Cabinet	LOSS OF SAFE-BY-DESIGN ATTRIBUTE	**SLAB** 11.5 cm Keff = 1.0 @ 6 wt %		Based on qualitative assessment, there is margin between the parameter values at normal operating conditions of Flexible Hose Decontamination Cabinet shape, amount of ^{235}U and enrichment and the conservative design/analysis values for these parameters assumed for criticality.
			More Heat	Based on qualitative assessment, it is highly unlikely for a process deviation to result in a more heat condition that would cause an approach to the critical safe shape and to adversely affect the maintenance of margin to criticality associated with design and maximum operating parameter values for amount of ^{235}U and enrichment.

Table 3.7-16 Decontamination Workshop

Criticality Assessment of Passive Safe-By-Design Components				
Component Description (A)	**Sequence ID (B)**	**Critical Design Attribute (C)**	**Review of Up-Set Conditions to Change Geometry (Applicable HAZOP Guidewords) (D)**	**Notes/Comments (E)**
			More Pressure	Based on qualitative assessment, it is highly unlikely for a process deviation to result in a more pressure condition that would cause an approach to the critical safe shape and to adversely affect the maintenance of margin to criticality associated with design and maximum operating parameter values for amount of ^{235}U and enrichment.
			Corrosion/ Erosion	Based on qualitative assessment, it is highly unlikely for a process deviation to result in a corrosion/erosion condition that would cause an approach to the critical safe shape. Materials are corrosion/erosion resistant.
			Loss of Confinement or Leakage	Based on qualitative assessment, postulated loss of the Flexible Hose Decontamination Cabinet or leakage will not result in any appreciable accumulation of ^{235}U material because of the robust construction of the curbed area.
			Fire	Components shall be protected from fire to ensure the critical design attribute of shape is not adversely impacted.
			Maintenance	Configuration Management shall ensure that maintenance does not adversely impact the critical design attribute of shape.
			Impact/Drop	Components shall be protected from impact/drop to ensure the criticality design attribute of shape is not adversely impacted.
			External Events (Construction on Site)	Components shall be protected from construction on-Site to ensure the criticality design attribute of shape is not adversely impacted.
			External Events (Failure of Above-Ground Liquid Storage Tanks)	Components shall be protected from external flooding (Failure of Above-Ground Liquid Storage Tanks) to ensure the criticality design attribute of shape is not adversely impacted.
			External Events (Hurricane)	Components shall be protected from hurricane events to ensure the criticality design attribute of shape is not adversely impacted.
			External Events (Seismic)	Components shall be protected from seismic events to ensure the criticality design attribute of shape is not adversely impacted.
			External Events (Tornado)	Components shall be protected from tornado events to ensure the criticality design attribute of shape is not adversely impacted.
			External Events (Local Intense Precipitation)	Components shall be protected from local intense precipitation events to ensure the criticality design attribute of shape is not adversely impacted.
			External Events (External Fire)	Components shall be protected from external fire events to ensure the criticality design attribute of shape is not adversely impacted.
			External Events (Snow/Ice)	Components shall be protected from external ice/snow events to ensure the criticality design attribute of shape is not adversely impacted.

Table 3.7-16 Decontamination Workshop

Criticality Assessment of Passive Safe-By-Design Components				
Component Description (A)	**Sequence ID (B)**	**Critical Design Attribute (C)**	**Review of Up-Set Conditions to Change Geometry (Applicable HAZOP Guidewords) (D)**	**Notes/Comments (E)**
				Double Contingency Principle is satisfied as follows. The geometry is criticality safe and no single credible event or failure has been identified whereby the geometry could become unsafe. The enrichment is also controlled such that no single credible failure could result in loss of enrichment control.
Sample Bottle Decontamination Cabinet	LOSS OF SAFE-BY-DESIGN ATTRIBUTE	**SLAB** 11.5 cm Keff = 1.0 @ 6 wt %		Based on qualitative assessment, there is margin between the parameter values at normal operating conditions of Sample Bottle Decontamination Cabinet shape, amount of ^{235}U and enrichment and the conservative design/analysis values for these parameters assumed for criticality.
			More Heat	Based on qualitative assessment, it is highly unlikely for a process deviation to result in a more heat condition that would cause an approach to the critical safe shape and to adversely affect the maintenance of margin to criticality associated with design and maximum operating parameter values for amount of ^{235}U and enrichment.
			More Pressure	Based on qualitative assessment, it is highly unlikely for a process deviation to result in a more pressure condition that would cause an approach to the critical safe shape and to adversely affect the maintenance of margin to criticality associated with design and maximum operating parameter values for amount of ^{235}U and enrichment.
			Corrosion/ Erosion	Based on qualitative assessment, it is highly unlikely for a process deviation to result in a corrosion/erosion condition that would cause an approach to the critical safe shape. Materials are corrosion/erosion resistant.
			Loss of Confinement or Leakage	Based on qualitative assessment, postulated loss of the Sample Bottle Decontamination Cabinet or leakage will not result in any appreciable accumulation of ^{235}U material because of the robust construction of the curbed area.
			Fire	Components shall be protected from fire to ensure the critical design attribute of shape is not adversely impacted.
			Maintenance	Configuration Management shall ensure that maintenance does not adversely impact the critical design attribute of shape.
			Impact/Drop	Components shall be protected from impact/drop to ensure the criticality design attribute of shape is not adversely impacted.
			External Events (Construction on Site)	Components shall be protected from construction on-Site to ensure the criticality design attribute of shape is not adversely impacted.
			External Events (Failure of Above-Ground Liquid Storage Tanks)	Components shall be protected from external flooding (Failure of Above-Ground Liquid Storage Tanks) to ensure the criticality design attribute of shape is not adversely impacted.
			External Events (Hurricane)	Components shall be protected from hurricane events to ensure the criticality design attribute of shape is not adversely impacted.

Table 3.7-16 Decontamination Workshop

Criticality Assessment of Passive Safe-By-Design Components				
Component Description (A)	**Sequence ID (B)**	**Critical Design Attribute (C)**	**Review of Up-Set Conditions to Change Geometry (Applicable HAZOP Guidewords) (D)**	**Notes/Comments (E)**
			External Events (Seismic)	Components shall be protected from seismic events to ensure the criticality design attribute of shape is not adversely impacted.
			External Events (Tornado)	Components shall be protected from tornado events to ensure the criticality design attribute of shape is not adversely impacted.
			External Events (Local Intense Precipitation)	Components shall be protected from local intense precipitation events to ensure the criticality design attribute of shape is not adversely impacted.
			External Events (External Fire)	Components shall be protected from external fire events to ensure the criticality design attribute of shape is not adversely impacted.
			External Events (Snow/Ice)	Components shall be protected from external ice/snow events to ensure the criticality design attribute of shape is not adversely impacted.
				Double Contingency Principle is satisfied as follows. The geometry is criticality safe and no single credible event or failure has been identified whereby the geometry could become unsafe. The enrichment is also controlled such that no single credible failure could result in loss of enrichment control.
Contaminated Components Hydraulic Bench	LOSS OF SAFE-BY-DESIGN ATTRIBUTE	**PHYSICAL ARRANGEMENT**		Based on qualitative assessment, there is margin between the normal operating conditions and the conservative design/analysis conditions assumed for criticality.
			Corrosion/ Erosion	Based on qualitative assessment, it is highly unlikely for a process deviation to result in a corrosion/erosion condition that would affect the maintenance of margin to criticality associated with design and maximum operating parameter values for physical arrangement.
			Fire	Components shall be protected from fire to ensure the critical design attribute of physical arrangement is not adversely impacted.
			Maintenance	Configuration Management shall ensure that maintenance does not adversely impact the critical design attribute of physical arrangement.
			Impact/Drop	Components shall be protected from impact/drop to ensure the critical design attribute of physical arrangement is not adversely impacted.
			External Events (Construction on Site)	Components shall be protected from construction on-Site to ensure the critical design attribute of physical arrangement is not adversely impacted.
			External Events (Failure of Above-Ground Liquid Storage Tanks)	Components shall be protected from external flooding (Failure of Above-Ground Liquid Storage Tanks) to ensure the critical design attribute of physical arrangement is not adversely impacted.
			External Events (Hurricane)	Components shall be protected from hurricane events to ensure the critical design attribute of physical arrangement is not adversely impacted.

Table 3.7-16 Decontamination Workshop

Criticality Assessment of Passive Safe-By-Design Components				
Component Description (A)	**Sequence ID (B)**	**Critical Design Attribute (C)**	**Review of Up-Set Conditions to Change Geometry (Applicable HAZOP Guidewords) (D)**	**Notes/Comments (E)**
			External Events (Seismic)	Components shall be protected from seismic events to ensure the critical design attribute of physical arrangement is not adversely impacted.
			External Events (Tornado)	Components shall be protected from tornado events to ensure the critical design attribute of physical arrangement is not adversely impacted.
			External Events (Local Intense Precipitation)	Components shall be protected from local intense precipitation events to ensure the critical design attribute of physical arrangement is not adversely impacted.
			External Events (External Fire)	Components shall be protected from external fire events to ensure the critical design attribute of physical arrangement is not adversely impacted.
			External Events (Snow/Ice)	Components shall be protected from external ice/snow events to ensure the critical design attribute of physical arrangement is not adversely impacted.
				Double Contingency Principle is satisfied as follows. The geometry is criticality safe and no single credible event or failure has been identified whereby the geometry could become unsafe. The enrichment is also controlled such that no single credible failure could result in loss of enrichment control.

Column Descriptions:

Column A: This column provides a brief description of each component.

Column B: This column identifies the accident sequence associated with the passive component.

Column C: This column identifies the critical design attribute under consideration along with the conservative values used in the criticality analysis.

Column D: This column identifies the applicable guidewords from the ISA HAZOP procedure that are used to assess the criticality design margin. Additional guidewords are addressed as applicable in the detailed assessment.

Column E: This column provides any notes, comments and concluding statements.

Table 3.7-17 Fomblin© Oil Recovery System

Criticality Assessment of Passive Safe-By-Design Components				
Component Description (A)	**Sequence ID (B)**	**Critical Design Attribute (C)**	**Review of Up-Set Conditions to Change Geometry (Applicable HAZOP Guidewords) (D)**	**Notes/Comments (E)**
PFPE Oil Recovery Rig	LOSS OF SAFE-BY-DESIGN ATTRIBUTE	**PHYSICAL ARRANGEMENT**		Based on qualitative assessment, there is margin between the normal operating conditions and the conservative design/analysis conditions assumed for criticality.
			More Heat	Based on qualitative assessment, it is highly unlikely for a process deviation to result in a more heat condition that would adversely affect the maintenance of margin to criticality associated with design and maximum operating parameter.
			More Pressure	Based on qualitative assessment, it is highly unlikely for a process deviation to result in a more pressure condition that would adversely affect the maintenance of margin to criticality associated with design and maximum operating parameter.
			Corrosion/ Erosion	Based on qualitative assessment, it is highly unlikely for a process deviation to result in a corrosion/erosion condition that would affect the maintenance of margin to criticality associated with design and maximum operating parameter values for physical arrangement.
			Loss of Confinement or Leakage	PFPE Oil Recovery Rig shall be protected from loss of confinement or leakage with a confinement area, the PFPE Oil Recovery Rig Cabinet, to ensure the critical design.
			Fire	Components shall be protected from fire to ensure the critical design attribute of physical arrangement is not adversely impacted.
			Maintenance	Configuration Management shall ensure that maintenance does not adversely impact the critical design attribute of physical arrangement.
			Impact/Drop	Components shall be protected from impact/drop to ensure the critical design attribute of physical arrangement is not adversely impacted.
			External Events (Construction on Site)	Components shall be protected from construction on-Site to ensure the critical design attribute of physical arrangement is not adversely impacted.
			External Events (Failure of Above-Ground Liquid Storage Tanks)	Components shall be protected from external flooding (Failure of Above-Ground Liquid Storage Tanks) to ensure the critical design attribute of physical arrangement is not adversely impacted.
			External Events (Hurricane)	Components shall be protected from hurricane events to ensure the critical design attribute of physical arrangement is not adversely impacted.
			External Events (Seismic)	Components shall be protected from seismic events to ensure the critical design attribute of physical arrangement is not adversely impacted.
			External Events (Tornado)	Components shall be protected from tornado events to ensure the critical design attribute of physical arrangement is not adversely impacted.
			External Events (Local Intense Precipitation)	Components shall be protected from local intense precipitation events to ensure the critical design attribute of physical arrangement is not adversely impacted.

Table 3.7-17 Fomblin© Oil Recovery System

Criticality Assessment of Passive Safe-By-Design Components				
Component Description (A)	**Sequence ID (B)**	**Critical Design Attribute (C)**	**Review of Up-Set Conditions to Change Geometry (Applicable HAZOP Guidewords) (D)**	**Notes/Comments (E)**
			External Events (External Fire)	Components shall be protected from external fire events to ensure the critical design attribute of physical arrangement is not adversely impacted.
			External Events (Snow/Ice)	Components shall be protected from external ice/snow events to ensure the critical design attribute of physical arrangement is not adversely impacted.
				Double Contingency Principle is satisfied as follows. The geometry is criticality safe and no single credible event or failure has been identified whereby the geometry could become unsafe. The enrichment is also controlled such that no single credible failure could result in loss of enrichment control.
PFPE Oil Recovery Rig Cabinet	LOSS OF SAFE-BY-DESIGN ATTRIBUTE	**SLAB** 11.5 cm Keff = 1.0 @ 6 wt %		Based on qualitative assessment, there is margin between the parameter values at normal operating conditions of PFPE Oil Recovery Rig Cabinet shape and the conservative design/analysis value for this parameter assumed for criticality.
			More Heat	Based on qualitative assessment, it is highly unlikely for a process deviation to result in a more heat condition that would cause an approach to the critical safe shape and to adversely affect the maintenance of margin to criticality associated with design and maximum operating parameter .
			More Pressure	Based on qualitative assessment, it is highly unlikely for a process deviation to result in a more pressure condition that would cause an approach to the critical safe shape and to adversely affect the maintenance of margin to criticality associated with design and maximum operating parameter.
			Corrosion/ Erosion	Based on qualitative assessment, it is highly unlikely for a process deviation to result in a corrosion/erosion condition that would cause an approach to the critical safe shape. Materials are corrosion/erosion resistant.
			Loss of Confinement or Leakage	Based on qualitative assessment, postulated loss of the PFPE Oil Recovery Rig Cabinet or leakage will not result in any appreciable accumulation of ^{235}U material because of the robust construction of the PFPE Oil Recovery Rig Cabinet.
			Fire	Components shall be protected from fire to ensure the critical design attribute of shape is not adversely impacted.
			Maintenance	Configuration Management shall ensure that maintenance does not adversely impact the critical design attribute of shape.
			Impact/Drop	Components shall be protected from impact/drop to ensure the criticality design attribute of shape is not adversely impacted.
			External Events (Construction on Site)	Components shall be protected from construction on-Site to ensure the criticality design attribute of shape is not adversely impacted.

Table 3.7-17 Fomblin© Oil Recovery System

Criticality Assessment of Passive Safe-By-Design Components				
Component Description (A)	**Sequence ID (B)**	**Critical Design Attribute (C)**	**Review of Up-Set Conditions to Change Geometry (Applicable HAZOP Guidewords) (D)**	**Notes/Comments (E)**
			External Events (Failure of Above-Ground Liquid Storage Tanks)	Components shall be protected from external flooding (Failure of Above-Ground Liquid Storage Tanks) to ensure the criticality design attribute of shape is not adversely impacted.
			External Events (Hurricane)	Components shall be protected from hurricane events to ensure the criticality design attribute of shape is not adversely impacted.
			External Events (Seismic)	Components shall be protected from seismic events to ensure the criticality design attribute of shape is not adversely impacted.
			External Events (Tornado)	Components shall be protected from tornado events to ensure the criticality design attribute of shape is not adversely impacted.
			External Events (Local Intense Precipitation)	Components shall be protected from local intense precipitation events to ensure the criticality design attribute of shape is not adversely impacted.
			External Events (External Fire)	Components shall be protected from external fire events to ensure the criticality design attribute of shape is not adversely impacted.
			External Events (Snow/Ice)	Components shall be protected from external ice/snow events to ensure the criticality design attribute of shape is not adversely impacted.
				Double Contingency Principle is satisfied as follows. The geometry is criticality safe and no single credible event or failure has been identified whereby the geometry could become unsafe. The enrichment is also controlled such that no single credible failure could result in loss of enrichment control.

Column Descriptions:

Column A: This column provides a brief description of each component.

Column B: This column identifies the accident sequence associated with the passive component.

Column C: This column identifies the critical design attribute under consideration along with the conservative values used in the criticality analysis.

Column D: This column identifies the applicable guidewords from the ISA HAZOP procedure that are used to assess the criticality design margin. Additional guidewords are addressed as applicable in the detailed assessment.

Column E: This column provides any notes, comments and concluding statements.

Table 3.7-18 Ventilated Room System

Criticality Assessment of Passive Safe-By-Design Components				
Component Description (A)	**Sequence ID (B)**	**Critical Design Attribute (C)**	**Review of Up-Set Conditions to Change Geometry (Applicable HAZOP Guidewords) (D)**	**Notes/Comments (E)**
Cylinder Pressure Test & Pump Out Piping (largest pipe ID in the system)	LOSS OF SAFE-BY-DESIGN ATTRIBUTE	**DIAMETER** 24.4 cm (ID) Keff = 1.0 @ 6 wt %		Based on qualitative assessment, there is margin between the parameter values at normal operating conditions of pipe diameter, amount of ^{235}U and enrichment and the conservative design/analysis values for these parameters assumed for criticality.
			More Heat	Based on qualitative assessment, it is highly unlikely for a process deviation to result in a more heat condition that would cause an approach to the critical safe diameter and to adversely affect the maintenance of margin to criticality associated with design and maximum operating parameter values for amount of ^{235}U and enrichment.
			More Pressure	Based on qualitative assessment, it is highly unlikely for a process deviation to result in a more pressure condition that would cause an approach to the critical safe diameter and to adversely affect the maintenance of margin to criticality associated with design and maximum operating parameter values for amount of ^{235}U and enrichment.
			Corrosion/ Erosion	Based on qualitative assessment, it is highly unlikely for a process deviation to result in a corrosion/erosion condition that would cause an approach to the critical safe diameter. Materials are corrosion/erosion resistant and postulated complete wall erosion would not exceed the critical safe diameter.
			Loss of Confinement or Leakage	Based on qualitative assessment, postulated loss of piping system confinement or leakage will not result in any appreciable accumulation of ^{235}U material. As a result, loss of confinement does not result in a potential for criticality and therefore its consequence is low.
			Fire	Components shall be protected from fire to ensure the critical design attribute of diameter is not adversely impacted.
			Maintenance	Configuration Management shall ensure that maintenance does not adversely impact the critical design attribute of diameter.
				Double Contingency Principle is satisfied as follows. The geometry is criticality safe and no single credible event or failure has been identified whereby the geometry could become unsafe. The enrichment is also controlled such that no single credible failure could result in loss of enrichment control.
Cylinder Pressure Test & Pump Out Piping Arrangement		**PHYSICAL ARRANGEMENT**		Based on qualitative assessment, there is margin between the normal operating conditions and the conservative design/analysis conditions assumed for criticality.
			More Heat	Based on qualitative assessment, it is highly unlikely for a process deviation to result in a more heat condition that would adversely affect the maintenance of margin to criticality associated with design and maximum operating parameter values for amount of ^{235}U and enrichment.

Table 3.7-18 Ventilated Room System

Criticality Assessment of Passive Safe-By-Design Components				
Component Description (A)	**Sequence ID (B)**	**Critical Design Attribute (C)**	**Review of Up-Set Conditions to Change Geometry (Applicable HAZOP Guidewords) (D)**	**Notes/Comments (E)**
			More Pressure	Based on qualitative assessment, it is highly unlikely for a process deviation to result in a more pressure condition that would adversely affect the maintenance of margin to criticality associated with design and maximum operating parameter values for amount of ^{235}U and enrichment.
			Corrosion/ Erosion	Based on qualitative assessment, it is highly unlikely for a process deviation to result in a corrosion/erosion condition that would affect the maintenance of margin to criticality associated with design and maximum operating parameter values for physical arrangement.
			Loss of Confinement or Leakage	Based on qualitative assessment, postulated loss of piping system confinement or leakage will not result in any appreciable accumulation of ^{235}U material. As a result, loss of confinement does not result in a potential for criticality and therefore its consequence is low.
			Fire	Components shall be protected from fire to ensure the critical design attribute of physical arrangement is not adversely impacted.
			Maintenance	Configuration Management shall ensure that maintenance does not adversely impact the critical design attribute of physical arrangement.
			Impact/Drop	Components shall be protected from impact/drop to ensure the critical design attribute of physical arrangement is not adversely impacted.
			External Events (Construction on Site)	Components shall be protected from construction on-Site to ensure the critical design attribute of physical arrangement is not adversely impacted.
			External Events (Failure of Above-Ground Liquid Storage Tanks)	Components shall be protected from external flooding (Failure of Above-Ground Liquid Storage Tanks) to ensure the critical design attribute of physical arrangement is not adversely impacted.
			External Events (Hurricane)	Components shall be protected from hurricane events to ensure the critical design attribute of physical arrangement is not adversely impacted.
			External Events (Seismic)	Components shall be protected from seismic events to ensure the critical design attribute of physical arrangement is not adversely impacted.
			External Events (Tornado)	Components shall be protected from tornado events to ensure the critical design attribute of physical arrangement is not adversely impacted.
			External Events (Local Intense Precipitation)	Components shall be protected from local intense precipitation events to ensure the critical design attribute of physical arrangement is not adversely impacted.
			External Events (External Fire)	Components shall be protected from external fire events to ensure the critical design attribute of physical arrangement is not adversely impacted.
			External Events (Snow/Ice)	Components shall be protected from external ice/snow events to ensure the critical design attribute of physical arrangement is not adversely impacted.

Table 3.7-18 Ventilated Room System

Criticality Assessment of Passive Safe-By-Design Components				
Component Description (A)	**Sequence ID (B)**	**Critical Design Attribute (C)**	**Review of Up-Set Conditions to Change Geometry (Applicable HAZOP Guidewords) (D)**	**Notes/Comments (E)**
				Double Contingency Principle is satisfied as follows. The geometry is criticality safe and no single credible event or failure has been identified whereby the geometry could become unsafe. The enrichment is also controlled such that no single credible failure could result in loss of enrichment control.
Cold Trap (Cylinder Pressure Test & Pump Out Evacuation)	LOSS OF SAFE-BY-DESIGN ATTRIBUTE	**DIAMETER** 24.4 cm (ID) Keff = 1.0 @ 6 wt %		Based on qualitative assessment, there is margin between the parameter values at normal operating conditions of component diameter, amount of ^{235}U and enrichment and the conservative design/analysis values for these parameters assumed for criticality.
			More Heat	Based on qualitative assessment, it is highly unlikely for a process deviation to result in a more heat condition that would cause an approach to the critical safe diameter and to adversely affect the maintenance of margin to criticality associated with design and maximum operating parameter values for amount of ^{235}U and enrichment.
			More Pressure	Based on qualitative assessment, it is highly unlikely for a process deviation to result in a more pressure condition that would cause an approach to the critical safe diameter and to adversely affect the maintenance of margin to criticality associated with design and maximum operating parameter values for amount of ^{235}U and enrichment.
			Corrosion/ Erosion	Based on qualitative assessment, it is highly unlikely for a process deviation to result in a corrosion/erosion condition that would cause an approach to the critical safe diameter. Materials are corrosion/erosion resistant and postulated complete wall erosion would not exceed the critical safe diameter.
			Loss of Confinement or Leakage	Based on qualitative assessment, postulated loss of cold trap confinement or leakage and will not result in any appreciable accumulation of material because of physical limitations of the process (sub-atmospheric). As a result, loss of confinement does not result in a potential for criticality and therefore its consequence is low.
			Fire	Components shall be protected from fire to ensure the critical design attribute of diameter is not adversely impacted.
			Maintenance	Configuration Management shall ensure that maintenance does not adversely impact the critical design attribute of diameter.
				Double Contingency Principle is satisfied as follows. The geometry is criticality safe and no single credible event or failure has been identified whereby the geometry could become unsafe. The enrichment is also controlled such that no single credible failure could result in loss of enrichment control.

Table 3.7-18 Ventilated Room System

Criticality Assessment of Passive Safe-By-Design Components				
Component Description (A)	**Sequence ID (B)**	**Critical Design Attribute (C)**	**Review of Up-Set Conditions to Change Geometry (Applicable HAZOP Guidewords) (D)**	**Notes/Comments (E)**
Cylinder Pressure Test & Pump Out Evacuation Pump	LOSS OF SAFE-BY-DESIGN ATTRIBUTE	**VOLUME** 24 liters Keff = 1.0 @ 6 wt %		Based on qualitative assessment, there is margin between the parameter values at normal operating conditions of Cylinder Pressure Test & Pump Out Evacuation Pump volume, amount of ^{235}U and enrichment and the conservative design/analysis values for these parameters assumed for criticality.
			More Heat	Based on qualitative assessment, it is highly unlikely for a process deviation to result in a more heat condition that would cause an approach to the critical safe volume and to adversely affect the maintenance of margin to criticality associated with design and maximum operating parameter values for amount of ^{235}U and enrichment.
			More Pressure	Based on qualitative assessment, it is highly unlikely for a process deviation to result in a more pressure condition that would cause an approach to the critical safe volume and to adversely affect the maintenance of margin to criticality associated with design and maximum operating parameter values for amount of ^{235}U and enrichment.
			Corrosion/ Erosion	Based on qualitative assessment, it is highly unlikely for a process deviation to result in a corrosion/erosion condition that would cause an approach to the critical safe volume. Materials are corrosion/erosion resistant and postulated complete wall erosion would not exceed the critical safe volume.
			Loss of Confinement or Leakage	Based on qualitative assessment, postulated loss of Cylinder Pressure Test & Pump Out Evacuation Pump confinement or leakage will not result in any appreciable accumulation of ^{235}U material because of physical limitations of the process (sub-atmospheric). As a result, loss of confinement does not result in a potential for criticality and therefore its consequence is low.
			Fire	Components shall be protected from fire to ensure the critical design attribute of volume is not adversely impacted.
			Maintenance	Configuration Management shall ensure that maintenance does not adversely impact the critical design attribute of volume.
				Double Contingency Principle is satisfied as follows. The geometry is criticality safe and no single credible event or failure has been identified whereby the geometry could become unsafe. The enrichment is also controlled such that no single credible failure could result in loss of enrichment control.
Carbon Trap (Cylinder Pressure Test & Pump Out Evacuation)	LOSS OF SAFE-BY-DESIGN ATTRIBUTE	**DIAMETER** 24.4 cm (ID) Keff = 1.0 @ 6 wt %		Based on qualitative assessment, there is margin between the parameter values at normal operating conditions of Carbon Trap diameter, amount of ^{235}U and enrichment and the conservative design/analysis values for these parameters assumed for criticality.
			More Heat	Based on qualitative assessment, it is highly unlikely for a process deviation to result in a more heat condition that would cause an approach to the critical safe diameter and to adversely affect the maintenance of margin to criticality associated with design and maximum operating parameter values for amount of ^{235}U and enrichment.

Table 3.7-18 Ventilated Room System

Criticality Assessment of Passive Safe-By-Design Components				
Component Description (A)	**Sequence ID (B)**	**Critical Design Attribute (C)**	**Review of Up-Set Conditions to Change Geometry (Applicable HAZOP Guidewords) (D)**	**Notes/Comments (E)**
			More Pressure	Based on qualitative assessment, it is highly unlikely for a process deviation to result in a more pressure condition that would cause an approach to the critical safe diameter and to adversely affect the maintenance of margin to criticality associated with design and maximum operating parameter values for amount of ^{235}U and enrichment.
			Corrosion/ Erosion	Based on qualitative assessment, it is highly unlikely for a process deviation to result in a corrosion/erosion condition that would cause an approach to the critical safe diameter. Materials are corrosion/erosion resistant and postulated complete wall erosion would not exceed the critical safe diameter.
			Loss of Confinement or Leakage	Based on qualitative assessment, postulated loss of Carbon Trap confinement or leakage will not result in any appreciable accumulation of ^{235}U material because of physical limitations of the process (sub-atmospheric). As a result, loss of confinement does not result in a potential for criticality and therefore its consequence is low.
			Fire	Components shall be protected from fire to ensure the critical design attribute of diameter is not adversely impacted.
			Maintenance	Configuration Management shall ensure that maintenance does not adversely impact the critical design attribute of diameter.
				Double Contingency Principle is satisfied as follows. The geometry is criticality safe and no single credible event or failure has been identified whereby the geometry could become unsafe. The enrichment is also controlled such that no single credible failure could result in loss of enrichment control.
Aluminum Oxide Trap (Cylinder Pressure Test & Pump Out Evacuation)	LOSS OF SAFE-BY-DESIGN ATTRIBUTE	**DIAMETER** 24.4 cm (ID) Keff = 1.0 @ 6 wt %		Based on qualitative assessment, there is margin between the parameter values at normal operating conditions of Aluminum Oxide Trap diameter, amount of ^{235}U and enrichment and the conservative design/analysis values for these parameters assumed for criticality.
			More Heat	Based on qualitative assessment, it is highly unlikely for a process deviation to result in a more heat condition that would cause an approach to the critical safe diameter and to adversely affect the maintenance of margin to criticality associated with design and maximum operating parameter values for amount of ^{235}U and enrichment.
			More Pressure	Based on qualitative assessment, it is highly unlikely for a process deviation to result in a more pressure condition that would cause an approach to the critical safe diameter and to adversely affect the maintenance of margin to criticality associated with design and maximum operating parameter values for amount of ^{235}U and enrichment.
			Corrosion/ Erosion	Based on qualitative assessment, it is highly unlikely for a process deviation to result in a corrosion/erosion condition that would cause an approach to the critical safe diameter. Materials are corrosion/erosion resistant and postulated complete wall erosion would not exceed the critical safe diameter.

Table 3.7-18 Ventilated Room System

Criticality Assessment of Passive Safe-By-Design Components				
Component Description (A)	**Sequence ID (B)**	**Critical Design Attribute (C)**	**Review of Up-Set Conditions to Change Geometry (Applicable HAZOP Guidewords) (D)**	**Notes/Comments (E)**
			Loss of Confinement or Leakage	Based on qualitative assessment, postulated loss of Aluminum Oxide Trap confinement or leakage will not result in any appreciable accumulation of ^{235}U material because of physical limitations of the process (sub-atmospheric). As a result, loss of confinement does not result in a potential for criticality and therefore its consequence is low.
			Fire	Components shall be protected from fire to ensure the critical design attribute of diameter is not adversely impacted.
			Maintenance	Configuration Management shall ensure that maintenance does not adversely impact the critical design attribute of diameter.
				Double Contingency Principle is satisfied as follows. The geometry is criticality safe and no single credible event or failure has been identified whereby the geometry could become unsafe. The enrichment is also controlled such that no single credible failure could result in loss of enrichment control.
Chemical Absorber Oil Trap (Cylinder Pressure Test & Pump Out Evacuation)	LOSS OF SAFE-BY-DESIGN ATTRIBUTE	**VOLUME** 24 liters Keff = 1.0 @ 6 wt %		Based on qualitative assessment, there is margin between the parameter values at normal operating conditions of Chemical Absorber Oil Trap volume, amount of ^{235}U and enrichment and the conservative design/analysis values for these parameters assumed for criticality.
			More Heat	Based on qualitative assessment, it is highly unlikely for a process deviation to result in a more heat condition that would cause an approach to the critical safe volume and to adversely affect the maintenance of margin to criticality associated with design and maximum operating parameter values for amount of ^{235}U and enrichment.
			More Pressure	Based on qualitative assessment, it is highly unlikely for a process deviation to result in a more pressure condition that would cause an approach to the critical safe volume and to adversely affect the maintenance of margin to criticality associated with design and maximum operating parameter values for amount of ^{235}U and enrichment.
			Corrosion/ Erosion	Based on qualitative assessment, it is highly unlikely for a process deviation to result in a corrosion/erosion condition that would cause an approach to the critical safe volume. Materials are corrosion/erosion resistant and postulated complete wall erosion would not exceed the critical safe volume.
			Loss of Confinement or Leakage	Based on qualitative assessment, postulated loss of Chemical Absorber Oil Trap confinement or leakage will not result in any appreciable accumulation of ^{235}U material because of physical limitations of the process (sub-atmospheric). As a result, loss of confinement does not result in a potential for criticality and therefore its consequence is low.
			Fire	Components shall be protected from fire to ensure the critical design attribute of volume is not adversely impacted.

Table 3.7-18 Ventilated Room System

Criticality Assessment of Passive Safe-By-Design Components				
Component Description (A)	**Sequence ID (B)**	**Critical Design Attribute (C)**	**Review of Up-Set Conditions to Change Geometry (Applicable HAZOP Guidewords) (D)**	**Notes/Comments (E)**
			Maintenance	Configuration Management shall ensure that maintenance does not adversely impact the critical design attribute of volume.
				Double Contingency Principle is satisfied as follows. The geometry is criticality safe and no single credible event or failure has been identified whereby the geometry could become unsafe. The enrichment is also controlled such that no single credible failure could result in loss of enrichment control.
Oil Trap (Cylinder Pressure Test & Pump Out Evacuation)	LOSS OF SAFE-BY-DESIGN ATTRIBUTE	**DIAMETER** 24.4 cm (ID) Keff = 1.0 @ 6 wt %		Based on qualitative assessment, there is margin between the parameter values at normal operating conditions of Oil Trap diameter, amount of ^{235}U and enrichment and the conservative design/analysis values for these parameters assumed for criticality.
			More Heat	Based on qualitative assessment, it is highly unlikely for a process deviation to result in a more heat condition that would cause an approach to the critical safe diameter and to adversely affect the maintenance of margin to criticality associated with design and maximum operating parameter values for amount of ^{235}U and enrichment.
			More Pressure	Based on qualitative assessment, it is highly unlikely for a process deviation to result in a more pressure condition that would cause an approach to the critical safe diameter and to adversely affect the maintenance of margin to criticality associated with design and maximum operating parameter values for amount of ^{235}U and enrichment.
			Corrosion/ Erosion	Based on qualitative assessment, it is highly unlikely for a process deviation to result in a corrosion/erosion condition that would cause an approach to the critical safe diameter. Materials are corrosion/erosion resistant and postulated complete wall erosion would not exceed the critical safe diameter.
			Loss of Confinement or Leakage	Based on qualitative assessment, postulated loss of Oil Trap confinement or leakage will not result in any appreciable accumulation of ^{235}U material because of physical limitations of the process (sub-atmospheric). As a result, loss of confinement does not result in a potential for criticality and therefore its consequence is low.
			Fire	Components shall be protected from fire to ensure the critical design attribute of diameter is not adversely impacted.
			Maintenance	Configuration Management shall ensure that maintenance does not adversely impact the critical design attribute of diameter.
				Double Contingency Principle is satisfied as follows. The geometry is criticality safe and no single credible event or failure has been identified whereby the geometry could become unsafe. The enrichment is also controlled such that no single credible failure could result in loss of enrichment control.

Table 3.7-18 Ventilated Room System

Criticality Assessment of Passive Safe-By-Design Components				
Component Description (A)	**Sequence ID (B)**	**Critical Design Attribute (C)**	**Review of Up-Set Conditions to Change Geometry (Applicable HAZOP Guidewords) (D)**	**Notes/Comments (E)**
Vacuum Cleaner	LOSS OF SAFE-BY-DESIGN ATTRIBUTE	**DIAMETER** 24.4 cm (ID) Keff = 1.0 @ 6 wt %		Based on qualitative assessment, there is margin between the parameter value at normal operating conditions of Vacuum Cleaner diameter and the conservative design/analysis value for this parameter assumed for criticality.
			More Heat	Based on qualitative assessment, it is highly unlikely for a process deviation to result in a more heat condition that would cause an approach to the critical safe diameter and to adversely affect the maintenance of margin to criticality associated with design and maximum operating parameter value.
			More Pressure	Based on qualitative assessment, it is highly unlikely for a process deviation to result in a more pressure condition that would cause an approach to the critical safe diameter and to adversely affect the maintenance of margin to criticality associated with design and maximum operating parameter value.
			Corrosion/ Erosion	Based on qualitative assessment, it is highly unlikely for a process deviation to result in a corrosion/erosion condition that would cause an approach to the critical safe diameter. Materials are corrosion/erosion resistant and postulated complete wall erosion would not exceed the critical safe diameter.
			Loss of Confinement or Leakage	Based on qualitative assessment, postulated loss of Vacuum Cleaner confinement or leakage will not result in any appreciable accumulation of ^{235}U. As a result, loss of confinement does not result in a potential for criticality and therefore its consequence is low.
			Fire	Components shall be protected from fire to ensure the critical design attribute of diameter is not adversely impacted.
			Maintenance	Configuration Management shall ensure that maintenance does not adversely impact the critical design attribute of diameter.
			Impact/Drop	Components shall be protected from Impact/Drop to ensure the critical design attribute of diameter is not adversely impacted.
			External Events (Construction on Site)	Components shall be protected from Construction on Site to ensure the critical design attribute of diameter is not adversely impacted.
			External Events (Failure of Above-Ground Liquid Tanks)	Components shall be protected from Failure of Above-Ground Liquid Tanks to ensure the critical design attribute of diameter is not adversely impacted.
			External Events (Hurricane)	Components shall be protected from Hurricane events to ensure the critical design attribute of diameter is not adversely impacted.
			External Events (Seismic)	Components shall be protected from Seismic events to ensure the critical design attribute of diameter is not adversely impacted.

Table 3.7-18 Ventilated Room System

Criticality Assessment of Passive Safe-By-Design Components				
Component Description (A)	**Sequence ID (B)**	**Critical Design Attribute (C)**	**Review of Up-Set Conditions to Change Geometry (Applicable HAZOP Guidewords) (D)**	**Notes/Comments (E)**
			External Events (Tornado)	Components shall be protected from Tornado events to ensure the critical design attribute of diameter is not adversely impacted.
			External Events (Local Intense Precipitation)	Components shall be protected from Local Intense Precipitation events to ensure the critical design attribute of diameter is not adversely impacted.
			External Events (Snow/Ice)	Components shall be protected from Snow/Ice events to ensure the critical design attribute of diameter is not adversely impacted.
				Double Contingency Principle is satisfied as follows. The geometry is criticality safe and no single credible event or failure has been identified whereby the geometry could become unsafe. The enrichment is also controlled such that no single credible failure could result in loss of enrichment control.
Cylinder Pressure Test & Pump Out Evacuation Pump/ Chemical Trap Set	LOSS OF SAFE-BY-DESIGN ATTRIBUTE	**PHYSICAL ARRANGEMENT**		Based on qualitative assessment, there is margin between the normal operating conditions and the conservative design/analysis conditions assumed for criticality.
			More Heat	Based on qualitative assessment, it is highly unlikely for a process deviation to result in a more heat condition that would adversely affect the maintenance of margin to criticality associated with design and maximum operating parameter values for amount of ^{235}U and enrichment.
			More Pressure	Based on qualitative assessment, it is highly unlikely for a process deviation to result in a more pressure condition that would adversely affect the maintenance of margin to criticality associated with design and maximum operating parameter values for amount of ^{235}U and enrichment.
			Corrosion/ Erosion	Based on qualitative assessment, it is highly unlikely for a process deviation to result in a corrosion/erosion condition that would affect the maintenance of margin to criticality associated with design and maximum operating parameter values for physical arrangement.
			Loss of Confinement or Leakage	Based on qualitative assessment, postulated loss of Cylinder Pressure Test & Pump Out Evacuation Pump/ Chemical Trap Set confinement or leakage will not result in any appreciable accumulation of ^{235}U material because of physical limitations of the process (sub-atmospheric). As a result, loss of confinement does not result in a potential for criticality and therefore its consequence is low.
			Fire	Components shall be protected from fire to ensure the critical design attribute of physical arrangement is not adversely impacted.
			Maintenance	Configuration Management shall ensure that maintenance does not adversely impact the critical design attribute of physical arrangement.

Table 3.7-18 Ventilated Room System

Criticality Assessment of Passive Safe-By-Design Components				
Component Description (A)	**Sequence ID (B)**	**Critical Design Attribute (C)**	**Review of Up-Set Conditions to Change Geometry (Applicable HAZOP Guidewords) (D)**	**Notes/Comments (E)**
			Impact/Drop	Components shall be protected from impact/drop to ensure the critical design attribute of physical arrangement is not adversely impacted.
			External Events (Construction on Site)	Components shall be protected from construction on-Site to ensure the critical design attribute of physical arrangement is not adversely impacted.
			External Events (Failure of Above-Ground Liquid Storage Tanks)	Components shall be protected from external flooding (Failure of Above-Ground Liquid Storage Tanks) to ensure the critical design attribute of physical arrangement is not adversely impacted.
			External Events (Hurricane)	Components shall be protected from hurricane events to ensure the critical design attribute of physical arrangement is not adversely impacted.
			External Events (Seismic)	Components shall be protected from seismic events to ensure the critical design attribute of physical arrangement is not adversely impacted.
			External Events (Tornado)	Components shall be protected from tornado events to ensure the critical design attribute of physical arrangement is not adversely impacted.
			External Events (Local Intense Precipitation)	Components shall be protected from local intense precipitation events to ensure the critical design attribute of physical arrangement is not adversely impacted.
			External Events (External Fire)	Components shall be protected from external fire events to ensure the critical design attribute of physical arrangement is not adversely impacted.
			External Events (Snow/Ice)	Components shall be protected from external ice/snow events to ensure the critical design attribute of physical arrangement is not adversely impacted.
				Double Contingency Principle is satisfied as follows. The geometry is criticality safe and no single credible event or failure has been identified whereby the geometry could become unsafe. The enrichment is also controlled such that no single credible failure could result in loss of enrichment control.
Pump Transport Device	LOSS OF SAFE-BY-DESIGN ATTRIBUTE	**PHYSICAL ARRANGEMENT**		Based on qualitative assessment, there is margin between the normal operating conditions and the conservative design/analysis conditions assumed for criticality.
			Corrosion/ Erosion	Based on qualitative assessment, it is highly unlikely for a process deviation to result in a corrosion/erosion condition that would affect the maintenance of margin to criticality associated with design and maximum operating parameter values for physical arrangement.
			Fire	Components shall be protected from fire to ensure the critical design attribute of physical arrangement is not adversely impacted.
			Maintenance	Configuration Management shall ensure that maintenance does not adversely impact the critical design attribute of physical arrangement.

Table 3.7-18 Ventilated Room System

Criticality Assessment of Passive Safe-By-Design Components				
Component Description (A)	**Sequence ID (B)**	**Critical Design Attribute (C)**	**Review of Up-Set Conditions to Change Geometry (Applicable HAZOP Guidewords) (D)**	**Notes/Comments (E)**
			Impact/Drop	Components shall be protected from impact/drop to ensure the critical design attribute of physical arrangement is not adversely impacted.
			External Events (Construction on Site)	Components shall be protected from construction on-Site to ensure the critical design attribute of physical arrangement is not adversely impacted.
			External Events (Failure of Above-Ground Liquid Storage Tanks)	Components shall be protected from external flooding (Failure of Above-Ground Liquid Storage Tanks) to ensure the critical design attribute of physical arrangement is not adversely impacted.
			External Events (Hurricane)	Components shall be protected from hurricane events to ensure the critical design attribute of physical arrangement is not adversely impacted.
			External Events (Seismic)	Components shall be protected from seismic events to ensure the critical design attribute of physical arrangement is not adversely impacted.
			External Events (Tornado)	Components shall be protected from tornado events to ensure the critical design attribute of physical arrangement is not adversely impacted.
			External Events (Local Intense Precipitation)	Components shall be protected from local intense precipitation events to ensure the critical design attribute of physical arrangement is not adversely impacted.
			External Events (External Fire)	Components shall be protected from external fire events to ensure the critical design attribute of physical arrangement is not adversely impacted.
			External Events (Snow/Ice)	Components shall be protected from external ice/snow events to ensure the critical design attribute of physical arrangement is not adversely impacted.
				Double Contingency Principle is satisfied as follows. The geometry is criticality safe and no single credible event or failure has been identified whereby the geometry could become unsafe. The enrichment is also controlled such that no single credible failure could result in loss of enrichment control.
Chemical Trap Transport Device	LOSS OF SAFE-BY-DESIGN ATTRIBUTE	**PHYSICAL ARRANGEMENT**		Based on qualitative assessment, there is margin between the normal operating conditions and the conservative design/analysis conditions assumed for criticality.
			Corrosion/ Erosion	Based on qualitative assessment, it is highly unlikely for a process deviation to result in a corrosion/erosion condition that would affect the maintenance of margin to criticality associated with design and maximum operating parameter values for physical arrangement.
			Fire	Components shall be protected from fire to ensure the critical design attribute of physical arrangement is not adversely impacted.
			Maintenance	Configuration Management shall ensure that maintenance does not adversely impact the critical design attribute of physical arrangement.

Table 3.7-18 Ventilated Room System

Criticality Assessment of Passive Safe-By-Design Components				
Component Description (A)	**Sequence ID (B)**	**Critical Design Attribute (C)**	**Review of Up-Set Conditions to Change Geometry (Applicable HAZOP Guidewords) (D)**	**Notes/Comments (E)**
			Impact/Drop	Components shall be protected from impact/drop to ensure the critical design attribute of physical arrangement is not adversely impacted.
			External Events (Construction on Site)	Components shall be protected from construction on-Site to ensure the critical design attribute of physical arrangement is not adversely impacted.
			External Events (Failure of Above-Ground Liquid Storage Tanks)	Components shall be protected from external flooding (Failure of Above-Ground Liquid Storage Tanks) to ensure the critical design attribute of physical arrangement is not adversely impacted.
			External Events (Hurricane)	Components shall be protected from hurricane events to ensure the critical design attribute of physical arrangement is not adversely impacted.
			External Events (Seismic)	Components shall be protected from seismic events to ensure the critical design attribute of physical arrangement is not adversely impacted.
			External Events (Tornado)	Components shall be protected from tornado events to ensure the critical design attribute of physical arrangement is not adversely impacted.
			External Events (Local Intense Precipitation)	Components shall be protected from local intense precipitation events to ensure the critical design attribute of physical arrangement is not adversely impacted.
			External Events (External Fire)	Components shall be protected from external fire events to ensure the critical design attribute of physical arrangement is not adversely impacted.
			External Events (Snow/Ice)	Components shall be protected from external ice/snow events to ensure the critical design attribute of physical arrangement is not adversely impacted.
				Double Contingency Principle is satisfied as follows. The geometry is criticality safe and no single credible event or failure has been identified whereby the geometry could become unsafe. The enrichment is also controlled such that no single credible failure could result in loss of enrichment control.
1S Sample Bottle	LOSS OF SAFE-BY-DESIGN ATTRIBUTE	**DIAMETER** 24.4 cm (ID) Keff = 1.0 @ 6 wt %		Based on qualitative assessment, there is margin between the parameter values at normal operating conditions of 1S Sample Bottle diameter, amount of ^{235}U and enrichment and the conservative design/analysis values for these parameters assumed for criticality.
			More Heat	Based on qualitative assessment, it is highly unlikely for a process deviation to result in a more heat condition that would cause an approach to the critical safe diameter and to adversely affect the maintenance of margin to criticality associated with design and maximum operating parameter values for amount of ^{235}U and enrichment.
			More Pressure	Based on qualitative assessment, it is highly unlikely for a process deviation to result in a more pressure condition that would cause an approach to the critical safe diameter and to adversely affect the maintenance of margin to criticality associated with design and maximum operating parameter values for amount of ^{235}U and enrichment.

Table 3.7-18 Ventilated Room System

Criticality Assessment of Passive Safe-By-Design Components				
Component Description (A)	**Sequence ID (B)**	**Critical Design Attribute (C)**	**Review of Up-Set Conditions to Change Geometry (Applicable HAZOP Guidewords) (D)**	**Notes/Comments (E)**
			Corrosion/ Erosion	Based on qualitative assessment, it is highly unlikely for a process deviation to result in a corrosion/erosion condition that would cause an approach to the critical safe diameter. Materials are corrosion/erosion resistant and postulated complete wall erosion would not exceed the critical safe diameter.
			Loss of Confinement or Leakage	Based on qualitative assessment, postulated loss of 1S Sample Bottle confinement or leakage will not result in any appreciable accumulation of ^{235}U material because of physical limitations of the process (sub-atmospheric). As a result, loss of confinement does not result in a potential for criticality and therefore its consequence is low.
			Fire	Components shall be protected from fire to ensure the critical design attribute of diameter is not adversely impacted.
			Maintenance	Configuration Management shall ensure that maintenance does not adversely impact the critical design attribute of diameter.
				Double Contingency Principle is satisfied as follows. The geometry is criticality safe and no single credible event or failure has been identified whereby the geometry could become unsafe. The enrichment is also controlled such that no single credible failure could result in loss of enrichment control.
Chemical Trap Storage Array	LOSS OF SAFE-BY-DESIGN ATTRIBUTE	**PHYSICAL ARRANGEMENT**		Based on qualitative assessment, there is margin between the normal operating conditions and the conservative design/analysis conditions assumed for criticality.
			Corrosion/ Erosion	Based on qualitative assessment, it is highly unlikely for a process deviation to result in a corrosion/erosion condition that would affect the maintenance of margin to criticality associated with design and maximum operating parameter values for physical arrangement.
			Fire	Components shall be protected from fire to ensure the critical design attribute of physical arrangement is not adversely impacted.
			Maintenance	Configuration Management shall ensure that maintenance does not adversely impact the critical design attribute of physical arrangement.
			Impact/Drop	Components shall be protected from impact/drop to ensure the critical design attribute of physical arrangement is not adversely impacted.
			External Events (Construction on Site)	Components shall be protected from construction on-Site to ensure the critical design attribute of physical arrangement is not adversely impacted.
			External Events (Failure of Above-Ground Liquid Storage Tanks)	Components shall be protected from external flooding (Failure of Above-Ground Liquid Storage Tanks) to ensure the critical design attribute of physical arrangement is not adversely impacted.

Table 3.7-18 Ventilated Room System

Criticality Assessment of Passive Safe-By-Design Components				
Component Description (A)	**Sequence ID (B)**	**Critical Design Attribute (C)**	**Review of Up-Set Conditions to Change Geometry (Applicable HAZOP Guidewords) (D)**	**Notes/Comments (E)**
			External Events (Hurricane)	Components shall be protected from hurricane events to ensure the critical design attribute of physical arrangement is not adversely impacted.
			External Events (Seismic)	Components shall be protected from seismic events to ensure the critical design attribute of physical arrangement is not adversely impacted.
			External Events (Tornado)	Components shall be protected from tornado events to ensure the critical design attribute of physical arrangement is not adversely impacted.
			External Events (Local Intense Precipitation)	Components shall be protected from local intense precipitation events to ensure the critical design attribute of physical arrangement is not adversely impacted.
			External Events (External Fire)	Components shall be protected from external fire events to ensure the critical design attribute of physical arrangement is not adversely impacted.
			External Events (Snow/Ice)	Components shall be protected from external ice/snow events to ensure the critical design attribute of physical arrangement is not adversely impacted.
				Double Contingency Principle is satisfied as follows. The geometry is criticality safe and no single credible event or failure has been identified whereby the geometry could become unsafe. The enrichment is also controlled such that no single credible failure could result in loss of enrichment control.
Dump Trap Storage Array	LOSS OF SAFE-BY-DESIGN ATTRIBUTE	**PHYSICAL ARRANGEMENT**		Based on qualitative assessment, there is margin between the normal operating conditions and the conservative design/analysis conditions assumed for criticality.
			Corrosion/ Erosion	Based on qualitative assessment, it is highly unlikely for a process deviation to result in a corrosion/erosion condition that would affect the maintenance of margin to criticality associated with design and maximum operating parameter values for physical arrangement.
			Fire	Components shall be protected from fire to ensure the critical design attribute of physical arrangement is not adversely impacted.
			Maintenance	Configuration Management shall ensure that maintenance does not adversely impact the critical design attribute of physical arrangement.
			Impact/Drop	Components shall be protected from impact/drop to ensure the critical design attribute of physical arrangement is not adversely impacted.
			External Events (Construction on Site)	Components shall be protected from construction on-Site to ensure the critical design attribute of physical arrangement is not adversely impacted.
			External Events (Failure of Above-Ground Liquid Storage Tanks)	Components shall be protected from external flooding (Failure of Above-Ground Liquid Storage Tanks) to ensure the critical design attribute of physical arrangement is not adversely impacted.

Table 3.7-18 Ventilated Room System

Criticality Assessment of Passive Safe-By-Design Components				
Component Description (A)	**Sequence ID (B)**	**Critical Design Attribute (C)**	**Review of Up-Set Conditions to Change Geometry (Applicable HAZOP Guidewords) (D)**	**Notes/Comments (E)**
			External Events (Hurricane)	Components shall be protected from hurricane events to ensure the critical design attribute of physical arrangement is not adversely impacted.
			External Events (Seismic)	Components shall be protected from seismic events to ensure the critical design attribute of physical arrangement is not adversely impacted.
			External Events (Tornado)	Components shall be protected from tornado events to ensure the critical design attribute of physical arrangement is not adversely impacted.
			External Events (Local Intense Precipitation)	Components shall be protected from local intense precipitation events to ensure the critical design attribute of physical arrangement is not adversely impacted.
			External Events (External Fire)	Components shall be protected from external fire events to ensure the critical design attribute of physical arrangement is not adversely impacted.
			External Events (Snow/Ice)	Components shall be protected from external ice/snow events to ensure the critical design attribute of physical arrangement is not adversely impacted.
				Double Contingency Principle is satisfied as follows. The geometry is criticality safe and no single credible event or failure has been identified whereby the geometry could become unsafe. The enrichment is also controlled such that no single credible failure could result in loss of enrichment control.
Dump Trap Interals	LOSS OF SAFE-BY-DESIGN ATTRIBUTE	**PHYSICAL ARRANGEMENT**		Based on qualitative assessment, there is margin between the normal operating conditions and the conservative design/analysis conditions assumed for criticality.
			More Heat	Based on qualitative assessment, it is highly unlikely for a process deviation to result in a more heat condition that would adversely affect the maintenance of margin to criticality associated with design and maximum operating parameter values for amount of ^{235}U and enrichment.
			More Pressure	Based on qualitative assessment, it is highly unlikely for a process deviation to result in a more pressure condition that would adversely affect the maintenance of margin to criticality associated with design and maximum operating parameter values for amount of ^{235}U and enrichment.
			Corrosion/ Erosion	Based on qualitative assessment, it is highly unlikely for a process deviation to result in a corrosion/erosion condition that would affect the maintenance of margin to criticality associated with design and maximum operating parameter values for physical arrangement.
			Loss of Confinement or Leakage	Based on qualitative assessment, postulated loss of Dump Trap confinement or leakage will not result in any appreciable accumulation of ^{235}U material because of physical limitations of the process (sub-atmospheric). As a result, loss of confinement does not result in a potential for criticality and therefore its consequence is low.
			Fire	Components shall be protected from fire to ensure the critical design attribute of physical arrangement is not adversely impacted.

Table 3.7-18 Ventilated Room System

Criticality Assessment of Passive Safe-By-Design Components				
Component Description (A)	**Sequence ID (B)**	**Critical Design Attribute (C)**	**Review of Up-Set Conditions to Change Geometry (Applicable HAZOP Guidewords) (D)**	**Notes/Comments (E)**
			Maintenance	Configuration Management shall ensure that maintenance does not adversely impact the critical design attribute of physical arrangement.
			Impact/Drop	Components shall be protected from impact/drop to ensure the critical design attribute of physical arrangement is not adversely impacted.
			External Events (Construction on Site)	Components shall be protected from construction on-Site to ensure the critical design attribute of physical arrangement is not adversely impacted.
			External Events (Failure of Above-Ground Liquid Storage Tanks)	Components shall be protected from external flooding (Failure of Above-Ground Liquid Storage Tanks) to ensure the critical design attribute of physical arrangement is not adversely impacted.
			External Events (Hurricane)	Components shall be protected from hurricane events to ensure the critical design attribute of physical arrangement is not adversely impacted.
			External Events (Seismic)	Components shall be protected from seismic events to ensure the critical design attribute of physical arrangement is not adversely impacted.
			External Events (Tornado)	Components shall be protected from tornado events to ensure the critical design attribute of physical arrangement is not adversely impacted.
			External Events (Local Intense Precipitation)	Components shall be protected from local intense precipitation events to ensure the critical design attribute of physical arrangement is not adversely impacted.
			External Events (External Fire)	Components shall be protected from external fire events to ensure the critical design attribute of physical arrangement is not adversely impacted.
			External Events (Snow/Ice)	Components shall be protected from external ice/snow events to ensure the critical design attribute of physical arrangement is not adversely impacted.
				Double Contingency Principle is satisfied as follows. The geometry is criticality safe and no single credible event or failure has been identified whereby the geometry could become unsafe. The enrichment is also controlled such that no single credible failure could result in loss of enrichment control.
12 Liter Canister Storage Array	LOSS OF SAFE-BY-DESIGN ATTRIBUTE	**PHYSICAL ARRANGEMENT**		Based on qualitative assessment, there is margin between the normal operating conditions and the conservative design/analysis conditions assumed for criticality.
			Corrosion/ Erosion	Based on qualitative assessment, it is highly unlikely for a process deviation to result in a corrosion/erosion condition that would affect the maintenance of margin to criticality associated with design and maximum operating parameter values for physical arrangement.
			Fire	Components shall be protected from fire to ensure the critical design attribute of physical arrangement is not adversely impacted.

Table 3.7-18 Ventilated Room System

Criticality Assessment of Passive Safe-By-Design Components				
Component Description (A)	**Sequence ID (B)**	**Critical Design Attribute (C)**	**Review of Up-Set Conditions to Change Geometry (Applicable HAZOP Guidewords) (D)**	**Notes/Comments (E)**
			Maintenance	Configuration Management shall ensure that maintenance does not adversely impact the critical design attribute of physical arrangement.
			Impact/Drop	Components shall be protected from impact/drop to ensure the critical design attribute of physical arrangement is not adversely impacted.
			External Events (Construction on Site)	Components shall be protected from construction on-Site to ensure the critical design attribute of physical arrangement is not adversely impacted.
			External Events (Failure of Above-Ground Liquid Storage Tanks)	Components shall be protected from external flooding (Failure of Above-Ground Liquid Storage Tanks) to ensure the critical design attribute of physical arrangement is not adversely impacted.
			External Events (Hurricane)	Components shall be protected from hurricane events to ensure the critical design attribute of physical arrangement is not adversely impacted.
			External Events (Seismic)	Components shall be protected from seismic events to ensure the critical design attribute of physical arrangement is not adversely impacted.
			External Events (Tornado)	Components shall be protected from tornado events to ensure the critical design attribute of physical arrangement is not adversely impacted.
			External Events (Local Intense Precipitation)	Components shall be protected from local intense precipitation events to ensure the critical design attribute of physical arrangement is not adversely impacted.
			External Events (External Fire)	Components shall be protected from external fire events to ensure the critical design attribute of physical arrangement is not adversely impacted.
			External Events (Snow/Ice)	Components shall be protected from external ice/snow events to ensure the critical design attribute of physical arrangement is not adversely impacted.
				Double Contingency Principle is satisfied as follows. The geometry is criticality safe and no single credible event or failure has been identified whereby the geometry could become unsafe. The enrichment is also controlled such that no single credible failure could result in loss of enrichment control.
12 Liter Canister	LOSS OF SAFE-BY-DESIGN ATTRIBUTE	**VOLUME** 24 liters Keff = 1.0 @ 6 wt %		Based on qualitative assessment, there is margin between the parameter value at normal operating conditions of 12 Liter Canister volume and the conservative design/analysis value for this parameter assumed for criticality.
			Corrosion/ Erosion	Based on qualitative assessment, it is highly unlikely for a process deviation to result in a corrosion/erosion condition that would cause an approach to the critical safe volume. Materials are corrosion/erosion resistant and postulated complete wall erosion would not exceed the critical safe volume.

Table 3.7-18 Ventilated Room System

Criticality Assessment of Passive Safe-By-Design Components				
Component Description (A)	**Sequence ID (B)**	**Critical Design Attribute (C)**	**Review of Up-Set Conditions to Change Geometry (Applicable HAZOP Guidewords) (D)**	**Notes/Comments (E)**
			Loss of Confinement or Leakage	Based on qualitative assessment, postulated loss of 12 liter canister confinement or leakage will not result in any appreciable accumulation of ^{235}U material. As a result, loss of confinement does not result in a potential for criticality and therefore its consequence is low.
			Fire	Components shall be protected from fire to ensure the critical design attribute of volume is not adversely impacted.
			Maintenance	Configuration Management shall ensure that maintenance does not adversely impact the critical design attribute of volume.
				Double Contingency Principle is satisfied as follows. The geometry is criticality safe and no single credible event or failure has been identified whereby the geometry could become unsafe. The enrichment is also controlled such that no single credible failure could result in loss of enrichment control.
12 Liter Canister Transport Device	LOSS OF SAFE-BY-DESIGN ATTRIBUTE	**PHYSICAL ARRANGEMENT**		Based on qualitative assessment, there is margin between the normal operating conditions and the conservative design/analysis conditions assumed for criticality.
			Corrosion/ Erosion	Based on qualitative assessment, it is highly unlikely for a process deviation to result in a corrosion/erosion condition that would affect the maintenance of margin to criticality associated with design and maximum operating parameter values for physical arrangement.
			Fire	Components shall be protected from fire to ensure the critical design attribute of physical arrangement is not adversely impacted.
			Maintenance	Configuration Management shall ensure that maintenance does not adversely impact the critical design attribute of physical arrangement.
			Impact/Drop	Components shall be protected from impact/drop to ensure the critical design attribute of physical arrangement is not adversely impacted.
			External Events (Construction on Site)	Components shall be protected from construction on-Site to ensure the critical design attribute of physical arrangement is not adversely impacted.
			External Events (Failure of Above-Ground Liquid Storage Tanks)	Components shall be protected from external flooding (Failure of Above-Ground Liquid Storage Tanks) to ensure the critical design attribute of physical arrangement is not adversely impacted.
			External Events (Hurricane)	Components shall be protected from hurricane events to ensure the critical design attribute of physical arrangement is not adversely impacted.
			External Events (Seismic)	Components shall be protected from seismic events to ensure the critical design attribute of physical arrangement is not adversely impacted.
			External Events (Tornado)	Components shall be protected from tornado events to ensure the critical design attribute of physical arrangement is not adversely impacted.

Table 3.7-18 Ventilated Room System

Criticality Assessment of Passive Safe-By-Design Components				
Component Description (A)	**Sequence ID (B)**	**Critical Design Attribute (C)**	**Review of Up-Set Conditions to Change Geometry (Applicable HAZOP Guidewords) (D)**	**Notes/Comments (E)**
			External Events (Local Intense Precipitation)	Components shall be protected from local intense precipitation events to ensure the critical design attribute of physical arrangement is not adversely impacted.
			External Events (External Fire)	Components shall be protected from external fire events to ensure the critical design attribute of physical arrangement is not adversely impacted.
			External Events (Snow/Ice)	Components shall be protected from external ice/snow events to ensure the critical design attribute of physical arrangement is not adversely impacted.
				Double Contingency Principle is satisfied as follows. The geometry is criticality safe and no single credible event or failure has been identified whereby the geometry could become unsafe. The enrichment is also controlled such that no single credible failure could result in loss of enrichment control.

Column Descriptions:

Column A: This column provides a brief description of each component.

Column B: This column identifies the accident sequence associated with the passive component.

Column C: This column identifies the critical design attribute under consideration along with the conservative values used in the criticality analysis.

Column D: This column identifies the applicable guidewords from the ISA HAZOP procedure that are used to assess the criticality design margin. Additional guidewords are addressed as applicable in the detailed assessment.

Column E: This column provides any notes, comments and concluding statements.

Table 3.7-19 Chemical Laboratory

Criticality Assessment of Passive Safe-By-Design Components				
Component Description (A)	**Sequence ID (B)**	**Critical Design Attribute (C)**	**Review of Up-Set Conditions to Change Geometry (Applicable HAZOP Guidewords) (D)**	**Notes/Comments (E)**
1S Sample Bottle	LOSS OF SAFE-BY-DESIGN ATTRIBUTE	**DIAMETER** 24.4 cm (ID) Keff = 1.0 @ 6 wt %		Based on qualitative assessment, there is margin between the parameter values at normal operating conditions of 1S Sample Bottle diameter, amount of ^{235}U and enrichment and the conservative design/analysis values for these parameters assumed for criticality.
			More Heat	Based on qualitative assessment, it is highly unlikely for a process deviation to result in a more heat condition that would cause an approach to the critical safe diameter and to adversely affect the maintenance of margin to criticality associated with design and maximum operating parameter values for amount of ^{235}U and enrichment.
			More Pressure	Based on qualitative assessment, it is highly unlikely for a process deviation to result in a more pressure condition that would cause an approach to the critical safe diameter and to adversely affect the maintenance of margin to criticality associated with design and maximum operating parameter values for amount of ^{235}U and enrichment.
			Corrosion/ Erosion	Based on qualitative assessment, it is highly unlikely for a process deviation to result in a corrosion/erosion condition that would cause an approach to the critical safe diameter. Materials are corrosion/erosion resistant and postulated complete wall erosion would not exceed the critical safe diameter.
			Loss of Confinement or Leakage	Based on qualitative assessment, postulated loss of 1S Sample Bottle confinement or leakage will not result in any appreciable accumulation of ^{235}U material because of physical limitations of the process (sub-atmospheric). As a result, loss of confinement does not result in a potential for criticality and therefore its consequence is low.
			Fire	Components shall be protected from fire to ensure the critical design attribute of diameter is not adversely impacted.
			Maintenance	Configuration Management shall ensure that maintenance does not adversely impact the critical design attribute of diameter.
				Double Contingency Principle is satisfied as follows. The geometry is criticality safe and no single credible event or failure has been identified whereby the geometry could become unsafe. The enrichment is also controlled such that no single credible failure could result in loss of enrichment control.
1S Sample Bottle Storage Array	LOSS OF SAFE-BY-DESIGN ATTRIBUTE	**PHYSICAL ARRANGEMENT**		Based on qualitative assessment, there is margin between the normal operating conditions and the conservative design/analysis conditions assumed for criticality.
			Corrosion/ Erosion	Based on qualitative assessment, it is highly unlikely for a process deviation to result in a corrosion/erosion condition that would affect the maintenance of margin to criticality associated with design and maximum operating parameter values for physical arrangement.
			Fire	Components shall be protected from fire to ensure the critical design attribute of physical arrangement is not adversely impacted.

Table 3.7-19 Chemical Laboratory

Criticality Assessment of Passive Safe-By-Design Components				
Component Description (A)	**Sequence ID (B)**	**Critical Design Attribute (C)**	**Review of Up-Set Conditions to Change Geometry (Applicable HAZOP Guidewords) (D)**	**Notes/Comments (E)**
			Maintenance	Configuration Management shall ensure that maintenance does not adversely impact the critical design attribute of physical arrangement.
			Impact/Drop	Components shall be protected from impact/drop to ensure the critical design attribute of physical arrangement is not adversely impacted.
			External Events (Construction on Site)	Components shall be protected from construction on-Site to ensure the critical design attribute of physical arrangement is not adversely impacted.
			External Events (Failure of Above-Ground Liquid Storage Tanks)	Components shall be protected from external flooding (Failure of Above-Ground Liquid Storage Tanks) to ensure the critical design attribute of physical arrangement is not adversely impacted.
			External Events (Hurricane)	Components shall be protected from hurricane events to ensure the critical design attribute of physical arrangement is not adversely impacted.
			External Events (Seismic)	Components shall be protected from seismic events to ensure the critical design attribute of physical arrangement is not adversely impacted.
			External Events (Tornado)	Components shall be protected from tornado events to ensure the critical design attribute of physical arrangement is not adversely impacted.
			External Events (Local Intense Precipitation)	Components shall be protected from local intense precipitation events to ensure the critical design attribute of physical arrangement is not adversely impacted.
			External Events (External Fire)	Components shall be protected from external fire events to ensure the critical design attribute of physical arrangement is not adversely impacted.
			External Events (Snow/Ice)	Components shall be protected from external ice/snow events to ensure the critical design attribute of physical arrangement is not adversely impacted.
				Double Contingency Principle is satisfied as follows. The geometry is criticality safe and no single credible event or failure has been identified whereby the geometry could become unsafe. The enrichment is also controlled such that no single credible failure could result in loss of enrichment control.
Cold Trap	LOSS OF SAFE-BY-DESIGN ATTRIBUTE	**DIAMETER** 24.4 cm (ID) Keff = 1.0 @ 6 wt %		Based on qualitative assessment, there is margin between the parameter values at normal operating conditions of component diameter, amount of ^{235}U and enrichment and the conservative design/analysis values for these parameters assumed for criticality.
			More Heat	Based on qualitative assessment, it is highly unlikely for a process deviation to result in a more heat condition that would cause an approach to the critical safe diameter and to adversely affect the maintenance of margin to criticality associated with design and maximum operating parameter values for amount of ^{235}U and enrichment.

Table 3.7-19 Chemical Laboratory

Criticality Assessment of Passive Safe-By-Design Components				
Component Description (A)	**Sequence ID (B)**	**Critical Design Attribute (C)**	**Review of Up-Set Conditions to Change Geometry (Applicable HAZOP Guidewords) (D)**	**Notes/Comments (E)**
			More Pressure	Based on qualitative assessment, it is highly unlikely for a process deviation to result in a more pressure condition that would cause an approach to the critical safe diameter and to adversely affect the maintenance of margin to criticality associated with design and maximum operating parameter values for amount of ^{235}U and enrichment.
			Corrosion/ Erosion	Based on qualitative assessment, it is highly unlikely for a process deviation to result in a corrosion/erosion condition that would cause an approach to the critical safe diameter. Materials are corrosion/erosion resistant and postulated complete wall erosion would not exceed the critical safe diameter.
			Loss of Confinement or Leakage	Based on qualitative assessment, postulated loss of cold trap confinement or leakage and will not result in any appreciable accumulation of material because of physical limitations of the process (sub-atmospheric). As a result, loss of confinement does not result in a potential for criticality and therefore its consequence is low.
			Fire	Components shall be protected from fire to ensure the critical design attribute of diameter is not adversely impacted.
			Maintenance	Configuration Management shall ensure that maintenance does not adversely impact the critical design attribute of diameter.
				Double Contingency Principle is satisfied as follows. The geometry is criticality safe and no single credible event or failure has been identified whereby the geometry could become unsafe. The enrichment is also controlled such that no single credible failure could result in loss of enrichment control.
UF_6 Sampling System Pump	LOSS OF SAFE-BY-DESIGN ATTRIBUTE	**VOLUME** 24 liters Keff = 1.0 @ 6 wt %		Based on qualitative assessment, there is margin between the parameter values at normal operating conditions of UF_6 Sampling System Pump volume, amount of ^{235}U and enrichment and the conservative design/analysis values for these parameters assumed for criticality.
			More Heat	Based on qualitative assessment, it is highly unlikely for a process deviation to result in a more heat condition that would cause an approach to the critical safe volume and to adversely affect the maintenance of margin to criticality associated with design and maximum operating parameter values for amount of ^{235}U and enrichment.
			More Pressure	Based on qualitative assessment, it is highly unlikely for a process deviation to result in a more pressure condition that would cause an approach to the critical safe volume and to adversely affect the maintenance of margin to criticality associated with design and maximum operating parameter values for amount of ^{235}U and enrichment.
			Corrosion/ Erosion	Based on qualitative assessment, it is highly unlikely for a process deviation to result in a corrosion/erosion condition that would cause an approach to the critical safe volume. Materials are corrosion/erosion resistant and postulated complete wall erosion would not exceed the critical safe volume.

Table 3.7-19 Chemical Laboratory

Criticality Assessment of Passive Safe-By-Design Components				
Component Description (A)	**Sequence ID (B)**	**Critical Design Attribute (C)**	**Review of Up-Set Conditions to Change Geometry (Applicable HAZOP Guidewords) (D)**	**Notes/Comments (E)**
			Loss of Confinement or Leakage	Based on qualitative assessment, postulated loss of UF_6 Sampling System Pump confinement or leakage will not result in any appreciable accumulation of ^{235}U material because of physical limitations of the process (sub-atmospheric). As a result, loss of confinement does not result in a potential for criticality and therefore its consequence is low.
			Fire	Components shall be protected from fire to ensure the critical design attribute of volume is not adversely impacted.
			Maintenance	Configuration Management shall ensure that maintenance does not adversely impact the critical design attribute of volume.
				Double Contingency Principle is satisfied as follows.. The geometry is criticality safe and no single credible event or failure has been identified whereby the geometry could become unsafe. The enrichment is also controlled such that no single credible failure could result in loss of enrichment control.
P10 Sample Bottle	LOSS OF SAFE-BY-DESIGN ATTRIBUTE	**DIAMETER** 24.4 cm (ID) Keff = 1.0 @ 6 wt %		Based on qualitative assessment, there is margin between the parameter values at normal operating conditions of P10 Sample Bottle diameter, amount of ^{235}U and enrichment and the conservative design/analysis values for these parameters assumed for criticality.
			More Heat	Based on qualitative assessment, it is highly unlikely for a process deviation to result in a more heat condition that would cause an approach to the critical safe diameter and to adversely affect the maintenance of margin to criticality associated with design and maximum operating parameter values for amount of ^{235}U and enrichment.
			More Pressure	Based on qualitative assessment, it is highly unlikely for a process deviation to result in a more pressure condition that would cause an approach to the critical safe diameter and to adversely affect the maintenance of margin to criticality associated with design and maximum operating parameter values for amount of ^{235}U and enrichment.
			Corrosion/ Erosion	Based on qualitative assessment, it is highly unlikely for a process deviation to result in a corrosion/erosion condition that would cause an approach to the critical safe diameter. Materials are corrosion/erosion resistant and postulated complete wall erosion would not exceed the critical safe diameter.
			Loss of Confinement or Leakage	Based on qualitative assessment, postulated loss of P10 Sample Bottle confinement or leakage will not result in any appreciable accumulation of ^{235}U material because of physical limitations of the process (sub-atmospheric). As a result, loss of confinement does not result in a potential for criticality and therefore its consequence is low.
			Fire	Components shall be protected from fire to ensure the critical design attribute of diameter is not adversely impacted.
			Maintenance	Configuration Management shall ensure that maintenance does not adversely impact the critical design attribute of diameter.

Table 3.7-19 Chemical Laboratory

Criticality Assessment of Passive Safe-By-Design Components				
Component Description (A)	**Sequence ID (B)**	**Critical Design Attribute (C)**	**Review of Up-Set Conditions to Change Geometry (Applicable HAZOP Guidewords) (D)**	**Notes/Comments (E)**
				Double Contingency Principle is satisfied as follows. The geometry is criticality safe and no single credible event or failure has been identified whereby the geometry could become unsafe. The enrichment is also controlled such that no single credible failure could result in loss of enrichment control.

Column Descriptions:

Column A: This column provides a brief description of each component.

Column B: This column identifies the accident sequence associated with the passive component.

Column C: This column identifies the critical design attribute under consideration along with the conservative values used in the criticality analysis.

Column D: This column identifies the applicable guidewords from the ISA HAZOP procedure that are used to assess the criticality design margin. Additional guidewords are addressed as applicable in the detailed assessment.

Column E: This column provides any notes, comments and concluding statements.

Table 3.7-20 Mass Spectrometry

Criticality Assessment of Passive Safe-By-Design Components				
Component Description (A)	**Sequence ID (B)**	**Critical Design Attribute (C)**	**Review of Up-Set Conditions to Change Geometry (Applicable HAZOP Guidewords) (D)**	**Notes/Comments (E)**
Mass Spectrometry	LOSS OF SAFE-BY-DESIGN ATTRIBUTE	**VOLUME** 24 liters Keff = 1.0 @ 6 wt %		Based on qualitative assessment, there is margin between the parameter values at normal operating conditions of Mass Spectrometry volume, amount of ^{235}U and enrichment and the conservative design/analysis values for these parameters assumed for criticality.
			More Heat	Based on qualitative assessment, it is highly unlikely for a process deviation to result in a more heat condition that would cause an approach to the critical safe volume and to adversely affect the maintenance of margin to criticality associated with design and maximum operating parameter values for amount of ^{235}U and enrichment.
			More Pressure	Based on qualitative assessment, it is highly unlikely for a process deviation to result in a more pressure condition that would cause an approach to the critical safe volume and to adversely affect the maintenance of margin to criticality associated with design and maximum operating parameter values for amount of ^{235}U and enrichment.
			Corrosion/ Erosion	Based on qualitative assessment, it is highly unlikely for a process deviation to result in a corrosion/erosion condition that would cause an approach to the critical safe volume. Materials are corrosion/erosion resistant and postulated complete wall erosion would not exceed the critical safe volume.
			Loss of Confinement or Leakage	Based on qualitative assessment, postulated loss of Mass Spectrometry confinement or leakage will not result in any appreciable accumulation of ^{235}U material because of physical limitations of the process (sub-atmospheric). As a result, loss of confinement does not result in a potential for criticality and therefore its consequence is low.
			Fire	Components shall be protected from fire to ensure the critical design attribute of volume is not adversely impacted.
			Maintenance	Configuration Management shall ensure that maintenance does not adversely impact the critical design attribute of volume.
				Double Contingency Principle is satisfied as follows. The geometry is criticality safe and no single credible event or failure has been identified whereby the geometry could become unsafe. The enrichment is also controlled such that no single credible failure could result in loss of enrichment control.
Finger Sample Bottle	LOSS OF SAFE-BY-DESIGN ATTRIBUTE	**DIAMETER** 24.4 cm (ID) Keff = 1.0 @ 6 wt %		Based on qualitative assessment, there is margin between the parameter values at normal operating conditions of Finger Sample Bottle diameter, amount of ^{235}U and enrichment and the conservative design/analysis values for these parameters assumed for criticality.
			More Heat	Based on qualitative assessment, it is highly unlikely for a process deviation to result in a more heat condition that would cause an approach to the critical safe diameter and to adversely affect the maintenance of margin to criticality associated with design and maximum operating parameter values for amount of ^{235}U and enrichment.

Table 3.7-20 Mass Spectrometry

Criticality Assessment of Passive Safe-By-Design Components				
Component Description (A)	**Sequence ID (B)**	**Critical Design Attribute (C)**	**Review of Up-Set Conditions to Change Geometry (Applicable HAZOP Guidewords) (D)**	**Notes/Comments (E)**
			More Pressure	Based on qualitative assessment, it is highly unlikely for a process deviation to result in a more pressure condition that would cause an approach to the critical safe diameter and to adversely affect the maintenance of margin to criticality associated with design and maximum operating parameter values for amount of ^{235}U and enrichment.
			Corrosion/ Erosion	Based on qualitative assessment, it is highly unlikely for a process deviation to result in a corrosion/erosion condition that would cause an approach to the critical safe diameter. Materials are corrosion/erosion resistant and postulated complete wall erosion would not exceed the critical safe diameter.
			Loss of Confinement or Leakage	Based on qualitative assessment, postulated loss of Finger Sample Bottle confinement or leakage will not result in any appreciable accumulation of ^{235}U material because of physical limitations of the process (sub-atmospheric). As a result, loss of confinement does not result in a potential for criticality and therefore its consequence is low.
			Fire	Components shall be protected from fire to ensure the critical design attribute of diameter is not adversely impacted.
			Maintenance	Configuration Management shall ensure that maintenance does not adversely impact the critical design attribute of diameter.
				Double Contingency Principle is satisfied as follows. The geometry is criticality safe and no single credible event or failure has been identified whereby the geometry could become unsafe. The enrichment is also controlled such that no single credible failure could result in loss of enrichment control.

Column Descriptions:

Column A: This column provides a brief description of each component.

Column B: This column identifies the accident sequence associated with the passive component.

Column C: This column identifies the critical design attribute under consideration along with the conservative values used in the criticality analysis.

Column D: This column identifies the applicable guidewords from the ISA HAZOP procedure that are used to assess the criticality design margin. Additional guidewords are addressed as applicable in the detailed assessment.

Column E: This column provides any notes, comments and concluding statements.

3.7.6 Section 3.7 Figures

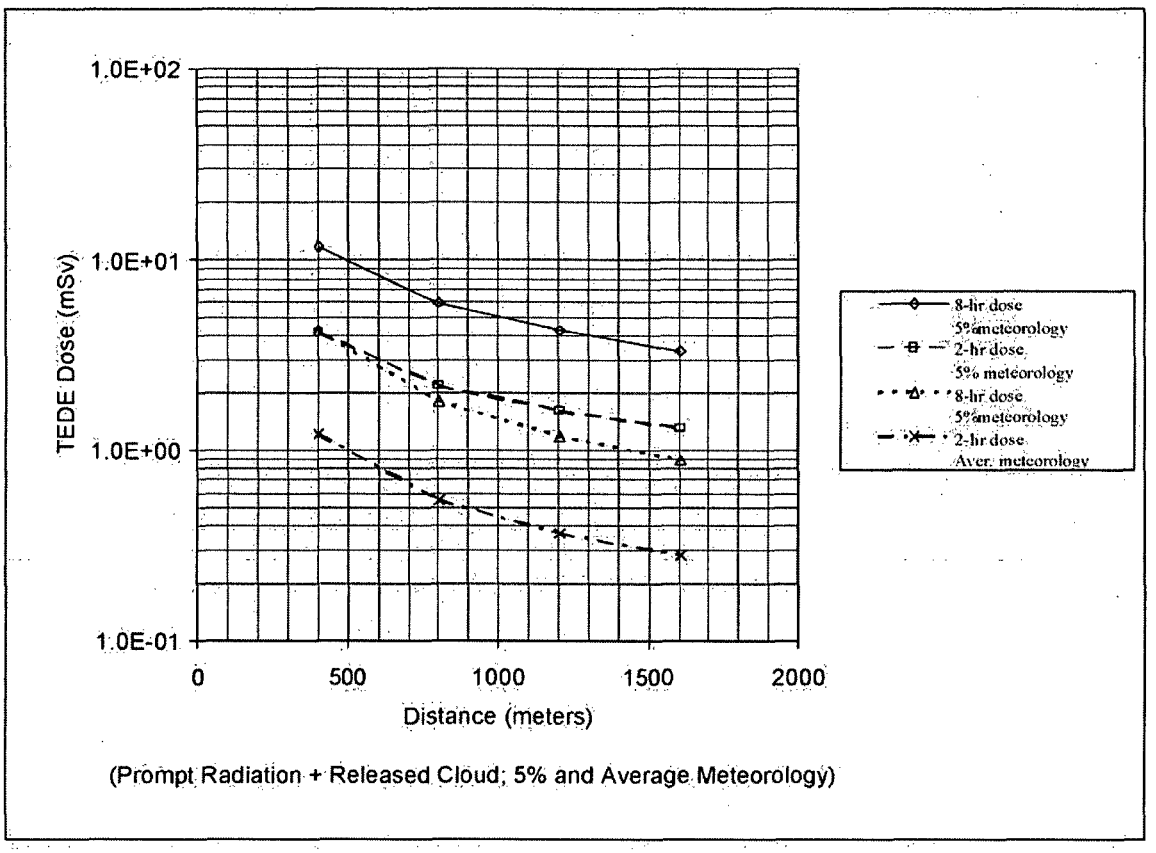

TEDE DOSES FROM POSTULATED CRITICALITY ACCIDENT

Figure 3.7-1 TEDE Doses from Postulated Criticality Accident

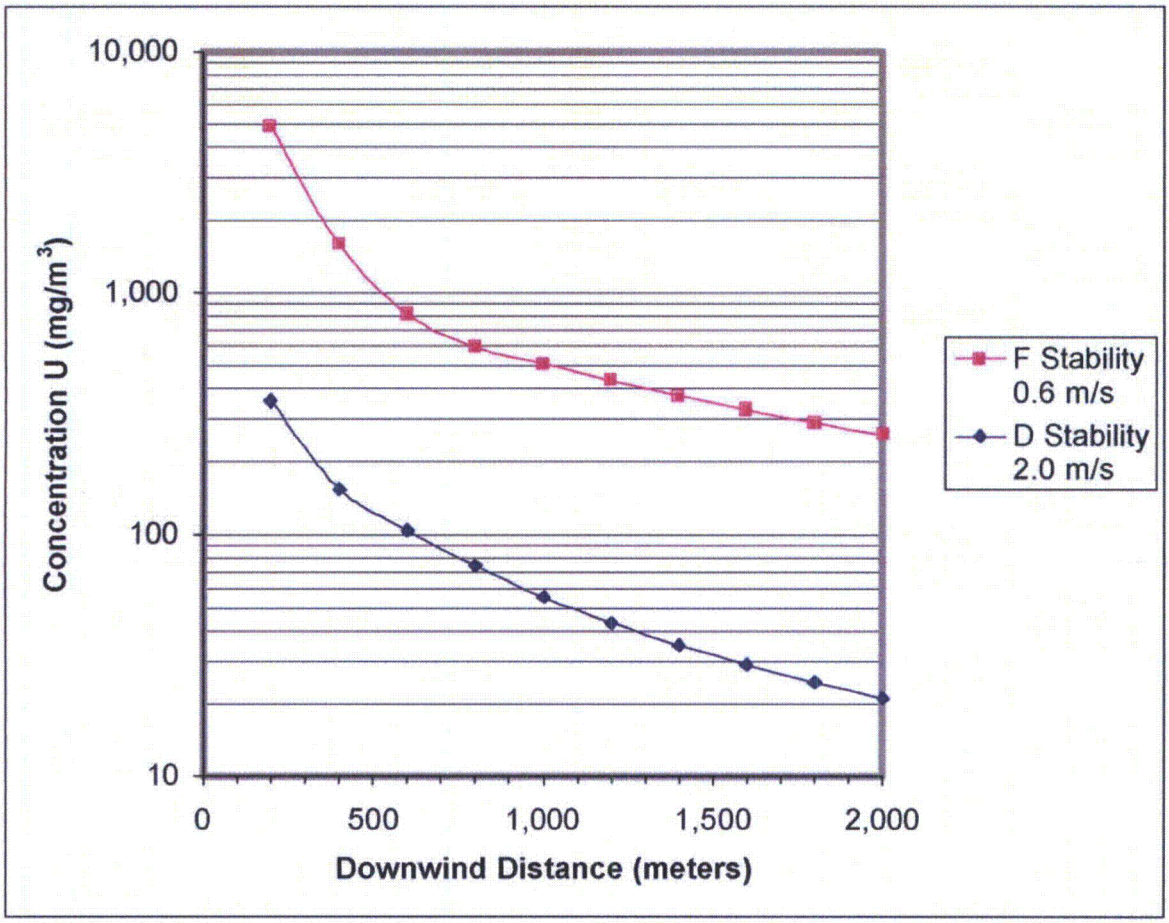

AIRBORNE URANIUM CONCENTRATIONS DUE TO A HEATER RUNAWAY RELEASE

Figure 3.7-2 Airborne Uranium Concentrations Due to a Heater Runaway Release

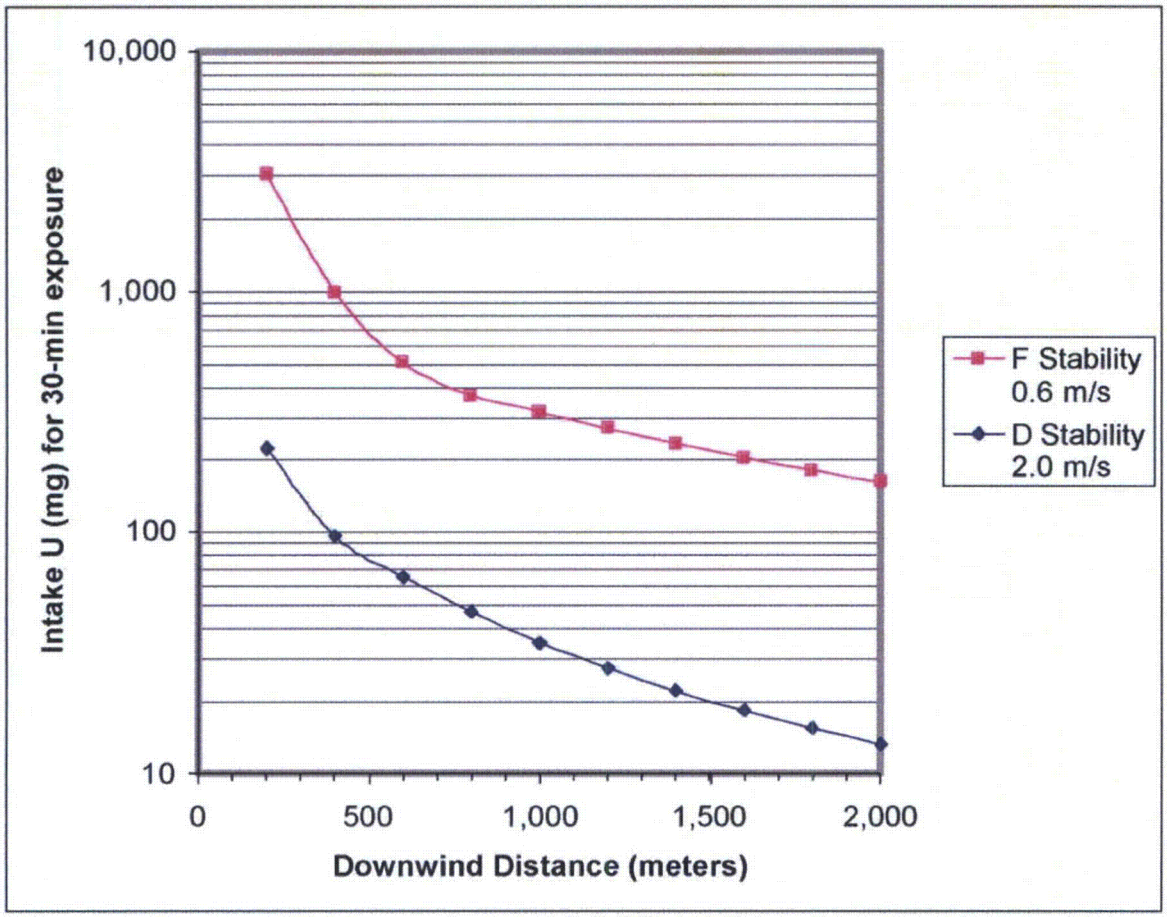

AIRBORNE URANIUM INTAKE DUE TO A HEATER RUNAWAY RELEASE

Figure 3.7-3 Airborne Uranium Intake Due to a Heater Runaway Release

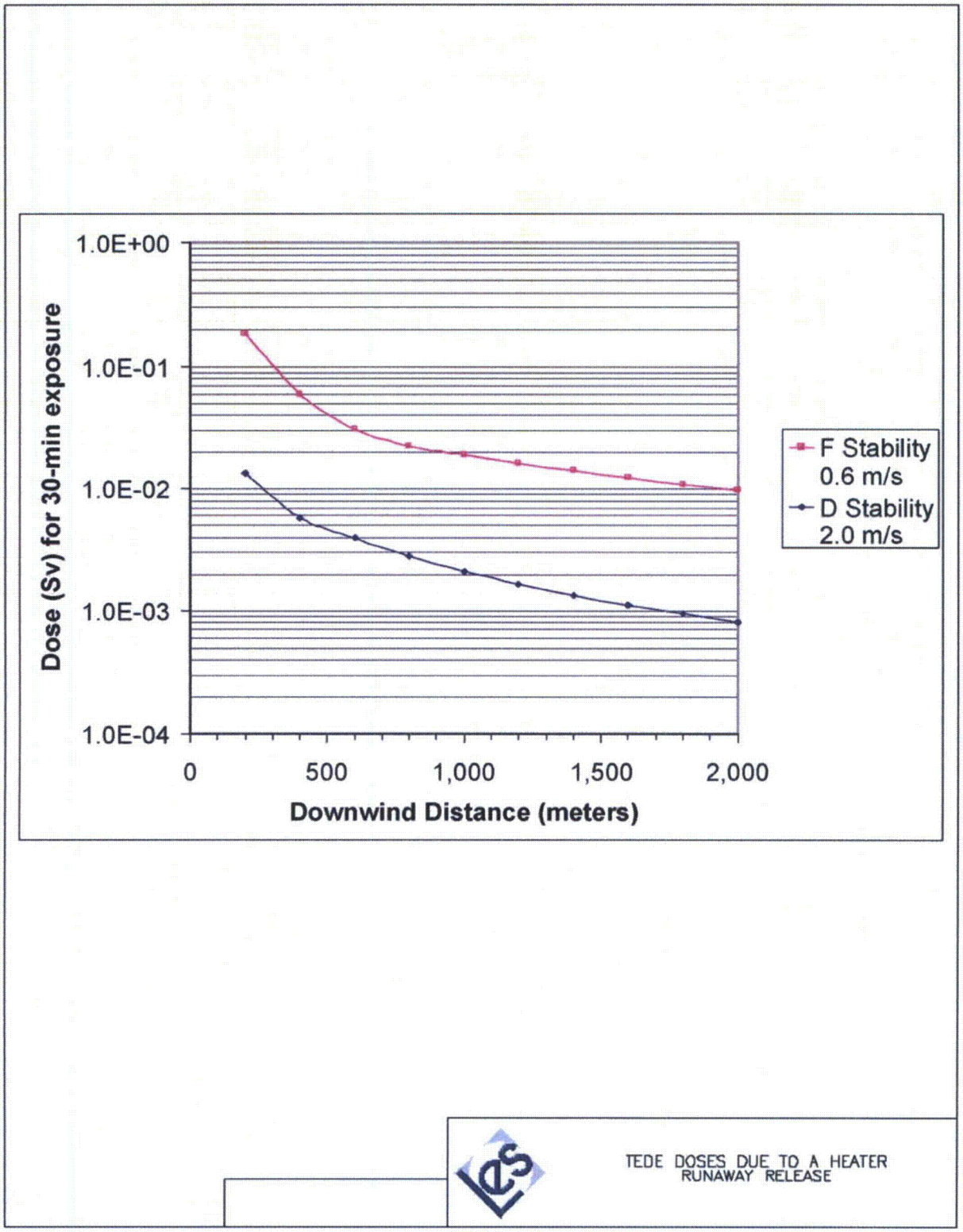

Figure 3.7-4 TEDE Doses Due to a Heater Runaway Release

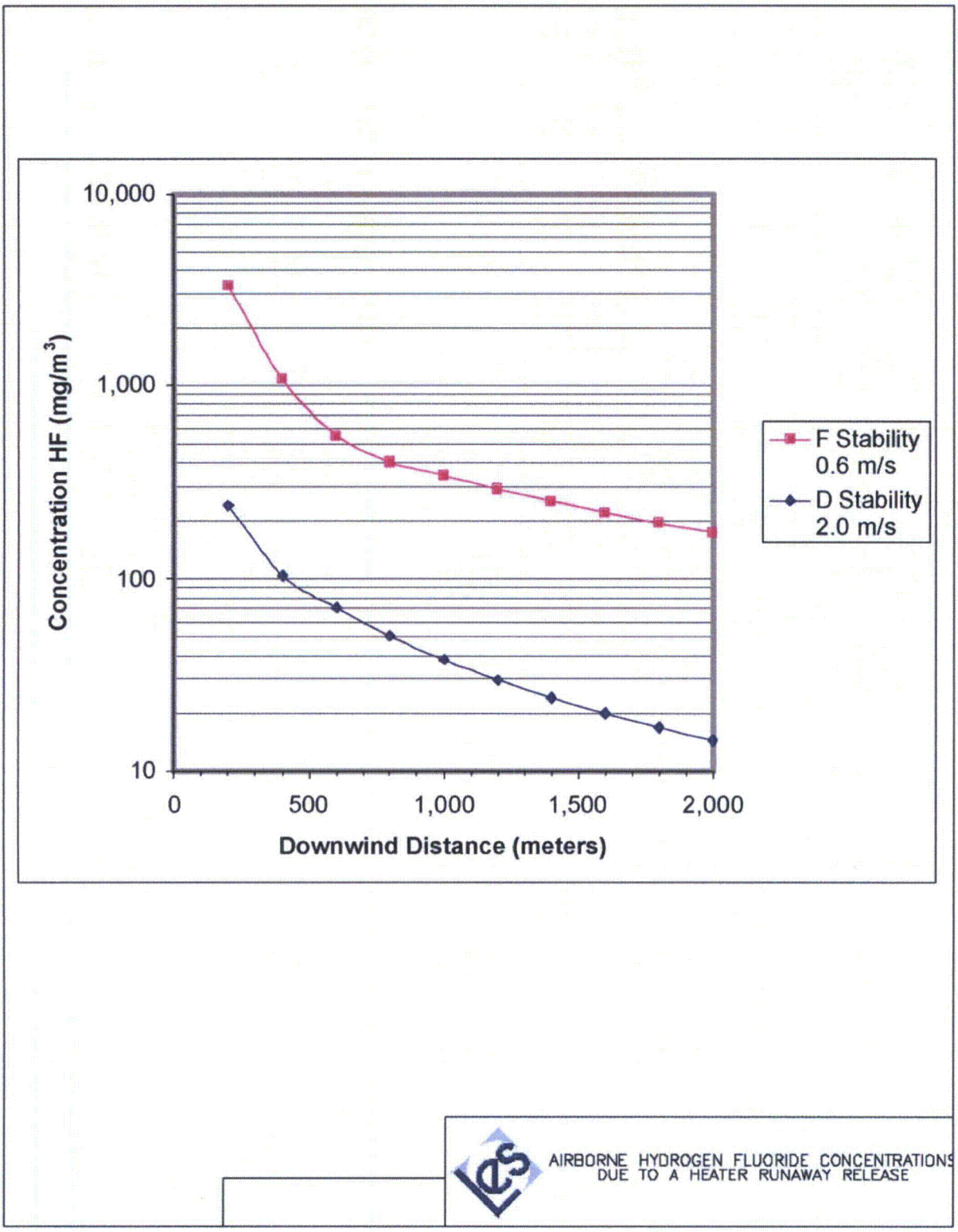

Figure 3.7-5 Airborne Hydrogen Fluoride Concentrations Due to a Heater Runaway Release

3.8 ITEMS RELIED ON FOR SAFETY (IROFS)

This section of the Integrated Safety Analysis (ISA) Summary lists all of the Items Relied On For Safety (IROFS) designated for high-and intermediate-consequence accident sequences.

3.8.1 IROFS

Table 3.8-1, Items Relied On For Safety (IROFS), provides the IROFS designated for the National Enrichment Facility (NEF). Those IROFS designated with "C" (e.g., IROFSC1) are from the classified ISA. All other IROFS (e.g., IROFS1) are from the non-classified ISA. These IROFS either reduce the likelihood of occurrence, or the consequences, of the accident scenarios for which they are credited such that the associated risks are acceptable. The IROFS, which reduce the likelihood of occurrence, are termed "preventive" whereas the IROFS, which reduce the consequences, are termed "mitigative." The majority of the IROFS designated for this facility are preventive. The IROFS designated for the NEF ensure that the hazards identified for this facility result in potential accident sequences that are of acceptable risk, as defined in Table 3.1 6, Risk Matrix with Risk Index Values. There are no IROFS that are frequently or continuously challenged.

Table 3.8-1, describes each IROFS, identifies its expected safety function, and references the accident sequence (as found in Table 3.7-2, Accident Sequence Descriptions and Table 3.7-4, External Events and Fire Accident Descriptions) that describes the conditions needed for the IROFS to reliably perform its function and the effects of its failure. The Table 3.8-1 description of each IROFS also identifies the Failure Probability Index Numbers. For indices that are more negative than the lower absolute value nominally assigned to the type of IROFS indicated from Table 3.1-10, a reference is made to Section 3.8.3, Basis for Enhanced or High Availability Failure Probability Index Number, to justify the index value used. The reliability for an IROFS is proportionate to the amount of risk reduction relied on in the ISA. Thus, the level of the reliability management measures applied to an IROFS is commensurate with the required reliability. Management measures will ensure that IROFS are designed, implemented, and maintained, as necessary, to be available and reliable to perform their safety function when needed. The degree of reliability and availability of IROFS ensured by these measures are consistent with the evaluations of accident likelihood in the ISA. As described in Section 3.8.1.3, general high-quality Management Measures are applied to all IROFS. However, certain IROFS evaluated in the ISA may require "enhanced" administrative controls or may require automatic engineered controls to have "high availability." The basis for these evaluations is presented in Section 3.8.3, as referenced from Table 3.8-1.

For accident sequences postulated to result in nuclear criticality, IROFS are specified to ensure subcriticality under all normal and credible abnormal conditions. In order to identify IROFS, it was conservatively assumed that initiating events would result in criticality. The IROFS associated with criticality accident sequences have been specified consistent with the definition of "Items relied on for safety" in 10 CFR 70.4, "Definitions" (CFR, 2003a).

IROFS will be designed, constructed, tested and maintained to QA Level 1. IROFS will comply with design requirements established by the ISA and the applicable codes and standards (listed in table 3.0-1). IROFS components and their designs will be of proven technology for their intended application. These IROFS components and systems will be qualified to perform their required safety functions under normal and accident conditions for which they are credited, e.g., pressure, temperature, humidity, seismic motion, electromagnetic interference, and radio-frequency interference, as required by the ISA. IROFS components and systems will be qualified using the applicable guidance in Institute of Electrical and Electronics Engineers (IEEE) standard IEEE-323, "IEEE Standard for Qualifying Class 1E Equipment for Nuclear Power Generating Stations". Furthermore, IROFS components and systems will be designed, procured, installed, tested, and maintained using the applicable guidance in Regulatory Guide 1.180, "Guidelines for Evaluating Electromagnetic and Radio-Frequency Interference in Safety-Related Instrumentation and Control Systems,". IROFS systems will be designed and maintained consistent with the reliability assumptions in the ISA. Redundant IROFS systems will be separate and independent from each other. IROFS systems will be designed to be fail-safe. In addition, IROFS systems will be designed such that process control system failures will not affect the ability of the IROFS systems to perform their required safety functions. Plant control systems are not used to perform IROFS functions. Installation of IROFS systems will be in accordance with engineering specifications and manufacturer's recommendations. Required testing and calibration of IROFS will be consistent with the assumptions of the ISA and setpoint calculations, as applicable. For hardware IROFS involving instrumentation which provides automatic prevention or mitigation of events, setpoint calculations are performed in accordance with a setpoint methodology, which is consistent with the applicable guidance provided in Regulatory Guide 1.105, "Setpoints for Safety-Related Instrumentation,".

In addition, for those IROFS requiring operator actions, a human factors engineering review of the human-system interfaces shall be conducted using the applicable guidance in NUREG-0700, "Human-System Interface Design Review Guidelines," and NUREG-0711, "Human Factors Engineering Program Review Model,".

For IROFS and IROFS with Enhanced Failure Probability Index Numbers (i.e., enhanced IROFS) that require "independent verification" of a safety function, the independent verification shall be independent with respect to personnel and personnel interface. Specifically, a second qualified individual, operating independently (e.g., not at the same time or not at the same location) of the individual assigned the responsibility to perform the required task, shall, as applicable, verify that the required task (i.e., safety function) has been performed correctly (e.g., verify a condition), or re-perform the task (i.e., safety function), and confirm acceptable results before additional action(s) can be taken which potentially negatively impact the safety function of the IROFS. The required task and independent verification shall be implemented by procedure and documented by initials or signatures of the individuals responsible for each task. In addition, the individuals performing the tasks shall be qualified to perform, for the particular system or process (as applicable) involved, the tasks required and shall possess operating knowledge of the particular system or process (as applicable) involved and its relationship to facility safety. The requirements for independent verification are consistent with the applicable guidance provided in ANSI/ANS-3.2.

For an IROFS that is found to be degraded or impaired by planned operations, maintenance, or construction activities: a compensatory measure may be used to ensure that the function of the IROFS is compensated until it is returned to service. For example, a continuous fire watch may be used to compensate for a degraded IROFS barrier.

The following information related to IROFS will be available onsite in the ISA documentation once final design is completed.

- Hardware IROFS design details, such as system schematics and/or descriptive lists, sufficient to determine the structures, system, equipment or component included within the hardware IROFS' boundary
- Identification of essential utilities and support systems on which the IROFS depends to perform the intended safety functions
- Operating ranges and limits for measured process variables, e.g., temperature, pressure, associated with IROFS
- Basis for establishing the average vulnerable outage time to maintain acceptable IROFS availability
- Safety limits and safety margins, as applicable.

3.8.2 Sole IROFS List

The sole IROFS for the NEF are provided in Table 3.8-2, Sole Items Relied On For Safety (IROFS). Table 3.8-2 identifies the sole IROFS titles, IROFS identifier, and references the accident sequence (in Table 3.7-2, Accident Sequence Descriptions, and Table 3.7-4, External Events and Fire Accident Descriptions) that describes the conditions needed for the IROFS to reliably perform its function and effects of its failure. The description of the sole IROFS associated safety functions is provided in Table 3.8-1. Sole IROFS are those designated as Class A on Table 3.8-1.

A sole IROFS is a single item or feature that is relied upon to prevent or mitigate an accident for which the consequences could exceed the performance requirements in 10 CFR 70.61 (CFR, 2003b). It is acceptable to rely on these sole IROFS because these IROFS will reliably provide sufficient preventive or mitigative features to ensure that the associated accident sequence results in an acceptable risk.

3.8.3 Basis for Enhanced or High Availability Failure Probability Index Number

For Failure Probability Index Number (FPIN) indices that are more negative than the lower absolute value nominally assigned to the type of IROFS indicated from Table 3.1-10, the following bases are provided. These IROFS reflect "enhanced" administrative controls and/or active engineered controls with "high availability." The following Sections are referenced from Table 3.8-1 for these IROFS. The nominal Management Measures outlined in Section 3.1.8.3 that apply to all IROFS, continue to also provide high quality assurance that these IROFS will be maintained, however, the following additional Management measures provided the basis for assigning the more negative value.

(Note subsection numbering is not contiguous. Subsections numbered to correspond to applicable IROFS number.)

3.8.3.14a IROFS14a Basis for Enhanced FPIN

The enhanced (i.e., Index of "-3") administrative control to restrict proximity of vessels in non-designed locations containing enriched uranic material to ensure subcritical configuration by verifying the use of a safe-by-design transfer frame is based on the following factors:

The failure to use a safe-by-design transfer frame will be precluded by independent verification prior to the movement of associated vessels containing enriched uranic material. This enhancement shall meet the requirements for independent verification identified in Section 3.8.1.

3.8.3.14b IROFS14b Basis for Enhanced FPIN

The enhanced (i.e., Index of "-3") administrative control to restrict proximity of vessels in non-designed locations containing enriched uranic material to ensure subcritical configuration by verifying the associated storage array condition is acceptable for storing the vessel and no other component containing enriched uranic material is in movement in the designated area is based on the following factors:

The failure to ensure that the required conditions are met for subcritical configuration will be precluded by independent verification prior to the movement of associated vessel containing enriched uranic material. This enhancement shall meet the requirements for independent verification identified in Section 3.8.1.

3.8.3.15 IROFS15 Basis for Enhanced FPIN

The enhanced (i.e., Index of "-3") administrative control to restrict an independent parameter of the criticality sequence to ensure subcritical configuration by preventing additional transfer of enriched uranic material to another container if that container contains enriched uranic material and is a non-safe-by-design container is based on the following factors:

Transfer of enriched uranic material into another container that contains enriched uranic material and is a non-safe-by-design container will be precluded by independent verification prior to the transfer of the enriched uranic material into a container. This enhancement shall meet the requirements for independent verification identified in Section 3.8.1.

3.8.3.16a IROFS16a Basis for Enhanced FPIN

The enhanced (i.e., Index of "-3") administrative control to limit moderator mass (oil and water) in cylinders containing enriched uranic material to ensure subcriticality by allowing no visible oil and limiting cylinder vapor pressure is based on the following factors:

The presence of visible oil in a cylinder and cylinder vapor pressure above required limits will be precluded by independent verification prior to the introducing product into a cylinder. This enhancement shall meet the requirements for independent verification identified in Section 3.8.1.

3.8.3.23a IROFS23a Basis for Enhanced FPIN

The enhanced (i.e., Index of "-3") administrative control for use of personal respiratory protection to ensure that inhalation of uranic material and HF consequences are low is based on the following factors:

The failure to use personal respiratory protection will be precluded by independent verification prior to the performing positive pressure testing of UF_6 cylinder after repair/replacement of a leaking cylinder component. This enhancement shall meet the requirements for independent verification identified in Section 3.8.1.

3.8.3.35 IROFS35 Basis for Enhanced FPIN

The high availability (i.e., Index of "-3") of the fire barriers, which include active engineered control associated with automatic closure of fire doors and dampers, is based on the following factors:

(1) Barriers shall be designed with adequate safety margin such that the total combustible loading (in situ and transients) allowed to expose the barrier will not exceed 80% of the hourly fire resistance rating of the barrier.

(2) Doors shall be automatic, self-closing and maintained in the closed position during normal operation or they will be provided with passive actuation mechanisms (e.g., fusible links) to affect closure in the event of a fire.

(3) Fire dampers in openings or HVAC duct penetrations shall be provided with passive actuation mechanisms (e.g., fusible links) to affect closure in the event of a fire.

(4) Routine (at least weekly) visual inspection of accessible areas ensures fire doors are closed or not inhibited from closing and latching in the closed position.

(5) Periodic visual inspection of dampers and through-penetration seal systems and functional testing of doors and dampers equipped with passive actuation devices confirms functionality.

(6) Spatial separation of not less than 3 meters (10 feet) is provided between interim storage of transient combustibles and critical components. The separation criteria will not apply during an individual operation or maintenance activity in this area due to the presence of personnel in the area performing the operation or activity. These personnel would be able to readily detect a fire in the proximity. This provides added margin to potential fire loading that is not credited in transient combustible allowance.

3.8.3.36a IROFS36a Basis for Enhanced FPIN

The enhanced (i.e., Index of "-3") administrative control to limit transient combustible loading is based on the following factors:

(1) Routine (at least weekly) visual inspection of accessible areas ensures no transient combustibles (other than may be appropriately labeled as accepted by Fire Safety Review) stored within any areas of concern and adjacent areas.

(2) Areas of concern and adjacent areas shall be appropriately posted to require consideration of entry with transient combustibles only in accordance with approved procedures, including a permitting system as appropriate.

3.8.3.36b Not Used

3.8.3.36c IROFS36c Basis for Enhanced FPIN

The enhanced (i.e., Index of "-3") administrative control to limit onsite UF_6 cylinder transporters/movers to ensure only use of electric drive or diesel powered with a fuel capacity of less than 280 L (74 gal) is based on the following factors:

(1) The designed cylinder transporters/movers shall be electric drive or diesel powered with a fuel capacity of less than 280 L (74 gal).

(2) Transportation of cylinders by means other than the designed transporters/ movers will be precluded by independent verification.

3.8.3.36d IROFS36d Basis for Enhanced FPIN

The enhanced (i.e., Index of "-3") administrative control to limit transient combustible loading in the fire area of concern to ensure integrity of uranic material containers and to ensure the quantity of uranic material at risk results in consequences to the public that are low, is based on the following factors:

(1) Routine (at least weekly) visual inspection of accessible areas ensures no transient combustibles (other than may be appropriately labeled as accepted by Fire Safety Review) stored within any areas of concern and adjacent areas.

(2) Routine (at least daily) visual inspection verifies no excessive open containers and that all stored waste is contained in metal containers.

(3) Areas of concern and adjacent areas shall be appropriately posted to require consideration of entry with transient combustibles only in accordance with approved procedures, including a permitting system as appropriate.

3.8.3.36e IROFS36e Basis for Enhanced FPIN

The enhanced (i.e., Index of "-3") administrative control to limit transient combustible loading on the UBC pad to ensure the presence of only electric drive vehicles or diesel powered vehicles with a fuel capacity of less than 280 L (74 gal), is based on the following factors:

(1) Routine (at least weekly) visual inspection ensures no transient combustibles (other than may be appropriately labeled as accepted by Fire Safety Review) stored on the UBC pad.

(2) The designed cylinder transporters/movers shall be electric drive or diesel powered with a fuel capacity of less than 280 L (74 gal).

(3) Access to the UBC pad with vehicles other than the designed cylinder transporters/movers will require verification that vehicle fuel capacity is less than 280 L (74 gal).

3.8.3.36f IROFS36f Basis for Enhanced FPIN

The enhanced (i.e., Index of "-3") administrative control to limit bulk fueling vehicles onsite to ensure UBC cylinder integrity is based on the following factors:

(1) Diesel fuel deliveries shall require escort to diesel fuel offload station following designated route that ensures adequate distance from UBC pad and buildings of concern.

(2) NEF site design shall provide surface gradient at the diesel fuel offload station away from UBC pad, or shall provide appropriate containment features.

(3) Design location for diesel fuel offloading will assure adequate distance from UBC to preclude challenge to cylinder integrity.

3.8.3.36g IROFS36g Basis for Enhanced FPIN

The enhanced (i.e., Index of "-3") administrative control to limit onsite vegetation fire sources to ensure integrity of important targets, is based on the following factors:

(1) Routine landscaping upkeep results in potential fire loading margins to cylinder and building wall fire ratings of such magnitude as to make this event highly unlikely.

(2) Routine (at least daily) visual inspection by security personnel provides enhanced monitoring.

3.8.3.36h Not Used

3.8.3.36i IROFS36i Basis for Enhanced FPIN

The enhanced (i.e., Index of "-3") administrative control to limit transient combustible loading is based on the following factors:

(1). Routine (at least weekly) visual inspection of accessible areas ensures no transient combustibles (other than may be appropriately labeled as accepted by Fire Safety Review) stored within any areas of concern.

(2). Areas of concern shall be appropriately posted to require consideration of entry with transient combustibles only in accordance with approved procedures, including a permitting system as appropriate.

3.8.3.38 IROFS38 Basis for Enhanced FPIN

The enhanced (i.e., Index of "-3") administrative control to limit the cylinder fill mass to ensure cylinder integrity is based on the following factors:

Exceeding the cylinder fill mass limit will be precluded by independent verification (i.e., second verification) performed on the next shift following the completion of the IROFS38 periodic verification on the previous shift (i.e., first verification). This enhancement shall meet the requirements for independent verification identified in Section 3.8.1.

3.8.3.39a IROFS39a Bases for Enhanced FPIN

The enhanced (i.e., Index of "3") administrative control to limit worker exposure by requiring evacuation of area(s) of concern in the event of a seismic event, is based on the following factors:

(1) Worker detection of ground motion associated with a seismic event is immediate (i.e., the worker will immediately sense and recognize ground motion associated with the seismic event of concern).

(2) Heightened awareness will allow immediate response to the seismic event. Training recall is greatly enhanced. Worker response for any release is expected to be immediate.

(3) Any release from UF_6 systems/cylinders at the NEF would predominantly consist of HF with some potential entrainment of uranic particulate. An HF release would predominately cause a visible cloud and a pungent odor which is detectable at concentrations less than 1 ppm. This odor threshold is well below the concentration that could cause permanent injury or produce escape-impairing symptoms. Inhalation of HF causes an intolerable prickling, burning sensation in the nose and throat, with cough and pain beneath the sternum. Ocular exposure to HF causes a burning sensation, redness and secretion. As a result, worker desire to promptly vacate the area will be high.

(4) Workers away from the immediate area of release would detect the release by the vapor cloud produced. The release will involve both white UF_6 (solid) and yellow uranyl fluoride reaction products. Visual clues as well as odor gradient will provide adequate assurance that the worker exposure time is less than that used in the consequence calculation.

(5) Sufficient time is available for the worker to reliably detect the event and evacuate the area(s) of concern.

3.8.3.39c IROFS39c Bases for Enhanced FPIN

The enhanced (i.e., Index of "3") administrative control to limit worker exposure by requiring evacuation of area(s) of concern in the event of a release, is based on the following factors:

(1) Worker detection of a release is immediate (i.e., the worker that causes the release will immediately sense and recognize a release, the worker elsewhere in the area will promptly detect the release by visual clues and odor associated with the release).

(2) Heightened awareness will allow immediate response to an event resulting from a release. Training recall is greatly enhanced. Worker response for any release is expected to be immediate.

(3) Any release from UF_6 systems/cylinders at the NEF would predominantly consist of HF with some potential entrainment of uranic particulate. An HF release would predominately cause a visible cloud and a pungent odor which is detectable at concentrations less than 1 ppm. This odor threshold is well below the concentration that could cause permanent injury or produce escape-impairing symptoms. Inhalation of HF causes an intolerable prickling, burning sensation in the nose and throat, with cough and pain beneath the sternum. Ocular exposure to HF causes a burning sensation, redness and secretion. As a result, worker desire to promptly vacate the area will be high.

(4) Workers away from the immediate area of release would detect the release by the vapor cloud produced. The release will involve both white UF_6 (solid) and yellow uranyl fluoride reaction products. Visual clues as well as odor gradient will provide adequate assurance that the worker exposure time is less than that used in the consequence calculation.

(4) Sufficient time is available for the worker to reliably detect the event and evacuate the area(s) of concern.

3.8.3.39d IROFS39d Bases for Enhanced FPIN

The enhanced (i.e., Index of "-3") administrative control to limit worker exposure by requiring evacuation of area(s) of concern in the event of severe weather, is based on the following factors:

(1) Multiple weather monitoring measures (i.e., on site and offsite) allow detection of the event of concern.

(2) Emergency preparedness through procedural actions ensures a systematic evacuation to sudden and expected inclement weather.

(3) Heightened awareness will allow immediate worker reponse to the weather. Training recall is greatly enhanced.

(4) Sufficient time is available for the site to detect the event and notify workers to evacuate the area(s) of concern.

3.8.3.45 IROFS45 Basis for Enhanced FPIN

The enhanced (i.e., Index of "-3") administrative control to ensure subcritical geometry, by verifying that the stored cylinders containing enriched uranium in the CRDB and Blending and Liquid Sampling Areas are in a horizontal, co-planar (i.e., non-stacked), condition and that no other cylinder containing enriched uranium is in movement in the associated area, is based on the following factors:

The failure to ensure that the required conditions are met for subcritical geometry will be precluded by independent verification prior to moving a cylinder containing enriched uranium in the CRDB or the Blending and Liquid Sampling Area. This enhancement shall meet the requirements for independent verification identified in Section 3.8.1.

3.8.3.C22 IROFSC22 Basis for Enhanced FPIN

The enhanced (i.e., Index of "-3") administrative control, to perform the cascade process mass balance on a periodic basis to ensure subcriticality in accordance with the nuclear safety analysis, is based on the following factors:

Subcriticality will be ensured by independent verification of the cascade process mass balance. This enhancement shall meet the requirements for independent verification, identified in Section 3.8.1.

3.8.3.50a IROFS50a Basis for Enhanced FPIN

The enhanced (i.e., Index of "-3") administrative IROFS to control proximity of a site construction vehicle relative to the UBC Storage Pad is based on the use of a physical device (barrier of sufficient strength to alert the operator). However, the index is increased by an order of magnitude for conservitism.

3.8.3.50b IROFS50b Basis for Enhanced FPIN

The enhanced (i.e., Index of "-3") administrative IROFS to control proximity of a site construction vehicle relative to an operating area is based on the use of a physical device (barrier of sufficient strength to alert the operator). However, the index is increased by an order of magnitude for conservitism.

3.8.3.50c IROFS50c Basis for Enhanced FPIN

The enhanced (i.e., Index "-3") administrative IROFS to control proximity of a site construction vehicle relative to an operating area is based on the use of a physical device (barrier of sufficient strength to alert the operator). However, the index is increased by an order of magnitude for potential dependent failures between IROFS50b and IROFS50c.

3.8.3.50f IROFS50f Basis for Enhanced FPIN

The enhanced (i.e., Index of "-3") administrative IROFS to control proximity of a construction crane relative to an operating area of concern by establishing a construction overhead crane "No Swing Zone," is based on the following factors:

1. Independent verification of the physical demarcation placement for identifying the "No Swing Zone."

2. Designating lifts constrained by "No Swing Zone" as critical lifts and associated critical lift requirements.

3.8.3.50h IROFS50h Basis for Enhanced FPIN

The enhanced (i.e., Index of "-3") administrative IROFS to control proximity of a site construction vehicle relative to the UBC Storage Pad is based on the use of a physical device (barrier of sufficient strength to alert the operator). However, the index is increased by an order of magnitude for potential dependent failures betweeb IROFS50a and IROFS50h.

3.8.4 References

Edition of Codes, Standards, NRC Documents, etc that are not listed below are given in Table 3.0-1.

CFR, 2003a. Title 10, Code of Federal Regulations, Section 70.4, Definitions, 2003.

CFR, 2003b. Title 10, Code of Federal Regulations, Section 70.61, Performance Requirements, 2003.

IEEE, 1983. Standard for Qualifying Class 1E Equipment for Nuclear Power Generating Stations, IEEE-323, Institute of Electrical and Electronics Engineers, 1983.

NRC, 1999. Setpoints for Safety-Related Instrumentation, Regulatory Guide 1.105,

U.S. Nuclear Regulatory Commission, Revision 3, December 1999.

NRC, 2002. Human-System Interface Design Review Guidelines, NUREG-0700, U.S. Nuclear Regulatory Commission, Revision 2, May 2002.

NRC, 2003. Regulatory Guide 1.180, Guidelines for Evaluating Electromagnetic and Radio-Frequency Interference in Safety-Related Instrumentation and Control Systems, Revision 1, October 2003.

NRC, 2004. Human Factors Engineering Program Review Model, NUREG-0711, U.S. Nuclear Regulatory Commission, Revision 2, February 2004.

3.8.5 Section 3.8 Tables

Table 3.8-1 Items Relied On For Safety (IROFS)

IROFS	Accident Sequence	Type of Accident	Type (1)	Class (2)	Description of Safety Function	FPIN (3)	FPIN Basis (4)
IROFS1	TT2-1 UF2-1 PT2-1 *PB2-1 * (See Table 4.1-3)	Chemical	AEC	B	Automatic trip of defrost heater and fan on high station internal air temperature to ensure cylinder integrity. This is implemented with a hardwired RTD temperature sensor for automatic, fail-safe, high station internal air temperature trip of defrost heaters and fans at Tails Low Temperature Take-off Stations, Feed Purification Low Temperature Take-off Stations, Product Low Temperature Take-off stations and Product Blending Receiver Stations. Setpoint conservative with respect to assuring cylinder integrity.	-2	N/A
IROFS2	TT2-1 UF2-1 PT2-1 *PB2-1 * (See Table 4.1-3)	Chemical	AEC	B	Automatic trip of defrost heater and fan on high station internal air temperature to ensure cylinder integrity. This is implemented with a thermocouple temperature sensor for automatic, hardwired, fail-safe, high station internal air temperature trip (independent and diverse from IROFS1) of defrost heaters and fans at Tails Low Temperature Take-off Stations, Feed Purification Low Temperature Take-off Stations, Product Low Temperature Take-off Stations and Product Blending Receiver Stations. Setpoint conservative with respect to assuring cylinder integrity.	-2	N/A
IROFS3	*PB3-3 *VR1-5 * (See Table 4.1-3)	Chemical	AEC	B	Automatic trip of the vacuum pump on carbon trap high weight to ensure the carbon trap does not become saturated with UF_6. This is implemented with an automatic hardwired, fail-safe, trip of the vacuum pump on high weight for evacuation pump sets. Setpoint conservative with respect to saturated carbon trap weight.	-2	N/A
IROFS3	*VR1-1 * (See Table 4.1-3)	Criticality	AEC	B	Automatic trip of the vacuum pump on carbon trap high weight to ensure the carbon trap does not become saturated with UF_6. This is implemented with an automatic hardwired, fail-safe, trip of the vacuum pump on high weight of the evacuation skid carbon trap in theVentilated Room Cylinder Pressure Test & Pump Out Rig. Setpoint conservative with respect to saturated carbon trap weight.	-2	N/A

Table 3.8-1 Items Relied On For Safety (IROFS)

IROFS	Accident Sequence	Type of Accident	Type (1)	Class (2)	Description of Safety Function	FPIN (3)	FPIN Basis (4)
IROFS4	UF1-1*PB1-1 * (See Table 4.1-3)	Chemical	AEC	B	Automatic trip of station heaters on high station internal air temperature to ensure cylinder integrity. This is implemented with a hardwired RTD temperature sensor for automatic, fail-safe, trip on high station internal air temperature of Solid Feed Station and Blending Donor Station heaters. Setpoint conservative with respect to assuring cylinder integrity.	-2	N/A
IROFS5	UF1-1 *PB1-1 * (See Table 4.1-3)	Chemical	AEC	B	Automatic trip of station heaters on high station internal air temperature to ensure cylinder integrity. This is implemented with a thermocouple temperature sensor for automatic, fail-safe, trip (independent and diverse from IROFS4) on high internal air temperature of Solid Feed Station and Blending Donor Station heaters. Setpoint conservative with respect to assuring cylinder integrity.	-2	N/A
IROFS10	*PB4-1 *PB4-3 * (See Table 4.1-3)	Chemical	PEC	A	Design feature to maintain Product Liquid Sampling Autoclave leak tight integrity. Total autoclave leakage is limited to that assumed in the consequence analyses.	-3	N/A
IROFS10	*PB4-4 * (See Table 4.1-3)	Chemical	PEC	B	Design feature to maintain Product Liquid Sampling Autoclave leak tight integrity. Total autoclave leakage is limited to that assumed in the consequence analyses.	-3	N/A
IROFS11	*PB4-2 * (See Table 4.1-3)	Chemical	AEC	B	Automatic trip of the autoclave heater and fan on autoclave high internal air temperature to ensure Product Liquid Sampling Autoclave integrity. This is implemented with an automatic fail-safe hardwired temperature sensor for trip (independent from IROFS12) of the heater and fan on high internal air temperature for the Product Liquid Sampling Autoclave integrity. Setpoint conservative with respect to assuring cylinder and autoclave integrity.	-2	N/A

Table 3.8-1 Items Relied On For Safety (IROFS)

IROFS	Accident Sequence	Type of Accident	Type (1)	Class (2)	Description of Safety Function	FPIN (3)	FPIN Basis (4)
IROFS12	*PB4-2 * (See Table 4.1-3)	Chemical	AEC	B	Automatic trip of the autoclave heater and fan on autoclave high internal air pressure to ensure Product Liquid Sampling Autoclave integrity. This is implemented with an automatic fail-safe hardwired pressure sensor for trip (independent of IROFS11) of the heater and fan on high air pressure for the Product Liquid Sampling Autoclave integrity. Setpoint conservative with respect to assuring autoclave integrity.	-2	N/A
IROFS14a	*FR1-1 *FR2-1 *DS1-1 *DS2-1 *DS3-1 *SW1-1 *LW1-2 † TVR1-2 * (See Table 4.1-3) † (See Table 4.1-4)	Criticality	AC	A	Administratively restrict proximity of vessels in non-designed locations containing enriched uranic material to ensure subcritical configuration. This is implemented by verifying the use of a safe-by-design transfer frame prior to movement of the associated waste container containing enriched uranic material. The proximity limit, enforced by the safe-by-design transfer frame, is based on assumptions in the Nuclear Criticality Safety Analyses. If the acceptance criterion is not met, then the associated waste container shall not be moved.	-3	3.8.3.14a

Table 3.8-1 Items Relied On For Safety (IROFS)

IROFS	Accident Sequence	Type of Accident	Type (1)	Class (2)	Description of Safety Function	FPIN (3)	FPIN Basis (4)
IROFS14b	*FR1-2 *FR2-2 *DS1-2 *DS2-2 *DS3-2 *SW1-2 *LW1-3 †TVR1-3 * (See Table 4.1-3) † (See Table 4.1-4)	Criticality	AC	A	Administratively restrict proximity of vessels in non-designed locations containing enriched uranic material to ensure subcritical configuration. This is implemented by verifying, prior to moving a waste container containing enriched uranic material within 180 cm of the associated storage array, the associated storage array condition is acceptable for storing the associated waste container (i.e., the storage array is the correct array for storage of the associated waste container, no component containing enriched uranic material is stored within 180 cm of the storage array (except in storage array locations), components are correctly stored in the array, and a vacant location is available for storage of the associated waste container) and no component containing enriched uranic material is in movement in the designated area. If the acceptance criteria are not met, then the associated waste container containing enrich uranic material shall not be moved.	-3	3.8.3.14b
IROFS15	*PT3-5 *(See Table 4.1-3)	Criticality	AC	A	Administratively restrict an independent parameter of the criticality sequence to ensure subcritical configuration by preventing additional transfer of enriched uranic material to another container if that container contains enriched uranic material and is a non-safe-by-design container. This will be implemented by establishing controls independent from other IROFS in applicable accident sequences. Specifically, IROFS15 will require verification that the associated container, into which enriched uranic material will be transferred, either contains no enriched uranic material or is a safe-by-design container prior to the transfer of the enriched uranic material into a container. If the acceptance criteria are not met, then the transfer of the enriched uranic material to the container shall not be initiated.	-3	3.8.3.15

Table 3.8-1 Items Relied On For Safety (IROFS)

IROFS	Accident Sequence	Type of Accident	Type (1)	Class (2)	Description of Safety Function	FPIN (3)	FPIN Basis (4)
IROFS16a	*PB2-2 CP1-2 * (See Table 4.1-3)	Criticality	AC	A	Administratively limit moderator mass (oil and water) in cylinders containing enriched uranic material to ensure subcriticality by allowing no visible oil and by limiting cylinder vapor pressure. This is implemented by allowing no visible oil and by limiting cylinder vapor pressure prior to introducing product, which is based on moderator limitations in the Nuclear Criticality Safety Analyses for product and receiver cylinders. If the acceptance criteria are not met, then product shall not be introduced into the associated cylinder.	-3	3.8.3.16a
IROFS19a	*DS1-3 *DS2-3 *LW1-1 *LW2-1 *LW3-1 *LW5-1 * (See Table 4.1-3)	Criticality	AC	B	Administratively limit the calculated tank uranic mass inventory to ensure a subcritical mass using bookkeeping procedures. This is implemented by bookkeeping procedures to limit calculated uranic mass to that assumed in the Nuclear Criticality Safety Analyses for the following Equipment Decontamination and Liquid Effluent Collection and Treatment Systems tanks: degreaser, citric acid, rinse water (2), spent citric acid, degreaser water collection, miscellaneous effluent collection, and the precipitation treatment. The calculated tank uranic mass inventory shall be determined using bookkeeping procedures prior to transfer of enriched uranic material to the associated tank. If the acceptance criterion is not met, then the enriched uranic material shall not be transferred to the associated tank.	-2	N/A

Table 3.8-1 Items Relied On For Safety (IROFS)

IROFS	Accident Sequence	Type of Accident	Type (1)	Class (2)	Description of Safety Function	FPIN (3)	FPIN Basis (4)
IROFS19c	*DS1-3 *DS2-3 *LW1-1 *LW2-1 *LW3-1 *LW5-1 * (See Table 4.1-3)	Criticality	AC	N/A	Administratively limit measured tank uranic mass inventory to ensure a subcritical mass by performing independent sampling and measurement. This is implemented by independent sampling and measurement, prior to transfer of enriched uranic material to the associated tank, to limit tank uranic mass to that assumed in the Nuclear Criticality Safety Analyses for the following Equipment Decontamination and Liquid Effluent Collection and Treatment Systems tanks: degreaser, citric acid, rinse water (2), spent citric acid, degreaser water collection, miscellaneous effluent collection, and the precipitation treatment. IROFS19c is independent of IROFS19d. If the acceptance criterion is not met, then enriched uranic material shall not be transferred to the associated tank.	N/A	N/A
IROFS19d	*DS1-3 *DS2-3 *LW1-1 *LW2-1 *LW3-1 *LW5-1 * (See Table 4.1-3)	Criticality	AC	B	Administratively limit measured tank uranic mass inventory to ensure a subcritical mass by performing independent sampling and measurement. This is implemented by independent sampling and measurement, prior to transfer of enriched uranic material to the associated tank, to limit tank uranic mass to that assumed in the Nuclear Criticality Safety Analyses for the following Equipment Decontamination and Liquid Effluent Collection and Treatment Systems tanks: degreaser, citric acid, rinse water (2), spent citric acid, degreaser water collection, miscellaneous effluent collection, and the precipitation treatment. IROFS19d is independent of IROFS19c. If the acceptance criterion is not met, then enriched uranic material shall not be transferred to the associated tank.	-2	N/A

Table 3.8-1 Items Relied On For Safety (IROFS)

IROFS	Accident Sequence	Type of Accident	Type (1)	Class (2)	Description of Safety Function	FPIN (3)	FPIN Basis (4)
IROFS20	*CL3-1 * (See Table 4-3)	Criticality	AEC	B	Automatic isolation of cold trap on cold trap high temperature to ensure no more than a subcritical mass deposited on the CRDB GEVS filter. This is implemented with an automatic hardwired, fail-safe, high temperature sensor that will close the Cold Trap No. 2 Valve, which is in line to the sub-sampling rig vacuum pump. This will prevent potential flow of UF_6 product to the CRDB GEVS in the event that the associated UF_6 cold trap is above a conservative desublimation temperature. Setpoint conservative with respect to assuring desublimation temperature.	-2	N/A
IROFS21	*VR1-1 *VR1-2 *CL3-1 * (See Table 4.1-3)	Criticality	AEC	B	Automatic trip of the CRDB GEVS on ^{235}U selective high-high gamma to ensure no more than a subcritical mass deposited on the filter. Upon detection of ^{235}U selective high-high gamma levels in the CRDB GEVS filter by hardwired, fail-safe, instrumentation, the CRDB GEVS trips. Setpoint conservative with respect to assuring critical mass as determined from Nuclear Criticality Safety Analyses.	-2	N/A
IROFS22	*VR1-2 * (See Table 4.1-3)	Criticality	AEC	B	Automatic trip of the vacuum pump on carbon trap high temperature to ensure the carbon trap does not pass excessive UF_6. This is implemented with an automatic hardwired, fail-safe, trip of the Ventilated Room evacuation skid vacuum pump on carbon trap high temperature. Setpoint conservative with respect to temperatures that reflect excessive UF_6 flowrate.	-2	N/A
IROFS23a	*VR1-3 * (See Table 4.1-3)	Chemical	AC	A	Administrative use of personal respiratory protection to ensure that inhalation of uranic material and HF consequences are low. This is implemented through the use of personal respiratory protection when performing positive pressure testing of UF_6 cylinder after repair/replacement of a leaking cylinder component such that assumptions of the consequence analysis are maintained. If personnel respiratory protection is not used, then the positive pressure test of the UF_6 cylinder shall not be performed.	-3	3.8.3.23a

Table 3.8-1 Items Relied On For Safety (IROFS)

IROFS	Accident Sequence	Type of Accident	Type (1)	Class (2)	Description of Safety Function	FPIN (3)	FPIN Basis (4)
IROFS23b	*VR2-1 * (See Table 4.1-3)	Chemical	AC	A	Administrative use of personal respiratory protection to ensure that inhalation of uranic material consequence is low. This is implemented through the use of personal respiratory protection when handling carbon trap material containing uranic material, such that assumptions in the consequence analyses are maintained. If personnel respiratory protection is not used, then carbon trap material containing uranic material shall not be handled.	-2	N/A
IROFS23b	*VR2-2 * (See Table 4.1-3)	Chemical	AC	B	Administrative use of personal respiratory protection to ensure that inhalation of uranic material consequence is low. This is implemented through the use of personal respiratory protection when handling sodium fluoride (NaF) trap material containing Uranic material such that assumptions in the consequence analyses are maintained. If personnel respiratory protection is not used, then NaF trap material containing uranic material shall not be handled.	-2	N/A
IROFS24a	*VR2-2 * (See Table 4.1-3)	Chemical	AC	B	Administrative establishment of airflow away from the worker to ensure inhalation of uranic material consequences are low. This is implemented through the use of the CRDB GEVS connected to the assembly when handling sodium fluoride (NaF) trap material containing uranic material. The CRDB GEVS shall be operating during this operation, consistent with assumption of the consequence calculation. If airflow away from the worker is not established, then NaF trap material containing uranic material shall not be handled.	-2	N/A

Table 3.8-1 Items Relied On For Safety (IROFS)

IROFS	Accident Sequence	Type of Accident	Type (1)	Class (2)	Description of Safety Function	FPIN (3)	FPIN Basis (4)
IROFS24b	*CL3-2 *CL3-3 * (See Table 4.1-3)	Chemical	AC	B	Administrative establishment of airflow away from the worker to ensure inhalation of uranic material and HF consequences are low. This is implemented through CRDB GEVS connected to Chemical Lab Hood when UF_6 Sub-sampling Unit is operated during transfer of product samples for assay analysis or during heating of a sample bottle(s) within the UF_6 Sub-sampling Unit. The CRDB GEVS shall be operating during this operation, consistent with assumption of the consequence calculation. If airflow away from the worker is not established, then transfer of product samples shall not be initiated and sample bottle(s) in the UF_6 Sub-sampling Unit shall not be heated.	-2	N/A
IROFS27a IROFS27b	*EE-LP-CRDB Bunker (CR) * (See Table 4.1-3)	Criticality	PEC	B	Design feature of buildings (excluding the SBMs) containing enriched uranic material for roof ponding and site flooding due to local intense precipitation, to ensure associated building area subcriticality. This is implemented by designing the building structures (IROFS27a and IROFS27b are required to be independent passive design features) to withstand the effects of local intense precipitation, thus ensuring lack of moderation consistent with the assumptions in the Nuclear Criticality Analyses.	-3	N/A
IROFS27c	*EE- TORNADO, TORNADO MISSILE, & HIGH WIND-CRDB BUNKER (T) *EE-SNOW-CRDB BUNKER (T) *EE-LP-CRDB BUNKER (T) *EE-SEISMIC-CRDB BUNKER (T) * (See Table 4.1-3)	Chemical	PEC	A	Design feature of buildings (excluding the SBMs) containing UF_6 process systems for seismic, tornado, tornado missile, high wind, roof snow load, and for roof ponding and site flooding due to local intense precipitation, to ensure UF_6 process systems integrity. This is implemented by designing the building structures to withstand the effects of seismic, tornado, tornado missile, high wind, roof snow load, and local intense precipitation, consistent with the assumptions in the bases for the consequence calculations.	-3	N/A

Table 3.8-1 Items Relied On For Safety (IROFS)

IROFS	Accident Sequence	Type of Accident	Type (1)	Class (2)	Description of Safety Function	FPIN (3)	FPIN Basis (4)
IROFS27e	*EE-SNOW-SBM-CRDB SHELL (T) *EE-LP-SBM-CRDB SHELL (T) *EE-TORNADO& HIGH WIND – SBM – CRDB SHELL (T) *EE-SEISMIC – CRDB SHELL (T) * (See Table 4.1-3)	Chemical	PEC	A	Design feature of SBMs and the CRDB superstructure (not including the Bunkered Area) for seismic, tornado, high wind, roof snow load, roof ponding and site flooding due to local intense precipitation, to ensure a chemical release does not exceed the 10 CFR 70.61 performance requirements. This is implemented by designing the building structures to withstand the effects of seismic, tornado, high wind, roof snow load, and local intense precipitation, consistent with the assumptions in the bases for the consequence calculations.	-3	N/A
IROFS27e	EE-SEISMIC-SBM	Chemical	PEC	B	Design feature of SBMs and the CRDB superstructure (not including the Bunkered Area) for seismic, tornado, high wind, roof snow load, roof ponding and site flooding due to local intense precipitation, to ensure a chemical release does not exceed the 10 CFR 70.61 performance requirements. This is implemented by designing the building structures to withstand the effects of seismic, tornado, high wind, roof snow load, and local intense precipitation, consistent with the assumptions in the bases for the consequence calculations.	-3	N/A
IROFS28	*EE-TORNADO-MISSILE-SBM-PUBLIC * (See Table 4.1-3)	Chemical	PEC	A	Design feature to maintain Product Liquid Sampling Autoclave leak tight integrity. This is implemented by providing a seismic design and tornado missile design of the Product Liquid Sampling Autoclave such that post-event total autoclave leakage is limited to that assumed in the consequence analyses.	-3	N/A
IROFS28	*EE-SEISMIC-SBM *(See Table 4.1-3)	Chemical	PEC	B	Design feature to maintain Product Liquid Sampling Autoclave Leak tight integrity This is implemented by providing a seismic design and tornado missile design of the Product Liquid Sampling Autoclave such that post-event total autoclave leakage is limited to that assumed in the consequence analyses.	-3	N/A

Table 3.8-1 Items Relied On For Safety (IROFS)

IROFS	Accident Sequence	Type of Accident	Type (1)	Class (2)	Description of Safety Function	FPIN (3)	FPIN Basis (4)
IROFS30a	PT2-5 *PB2-6 * (See Table 4.1-3)	Criticality	AC	N/A	Administratively limit hydrocarbon oil (moderator mass) in enriched uranium product to ensure moderation control assumptions are maintained by controlling the type of oil used in process vacuum pumps. This is implemented by controlling the type of oil used in all process vacuum pumps to only perfluorinated polyether (PFPE) oil, consistent with moderation assumptions in the Nuclear Criticality Safety Analyses. If the acceptance criterion are not met, then action shall be initiated to remove the associated vacuum pumps from process systems.	N/A	N/A
IROFS30b	PT2-5 *PB2-6 * (See Table 4.1-3)	Criticality	AC	B	Administratively limit hydrocarbon oil (moderator mass) in enriched uranium product to ensure moderation control assumptions are maintained by verifying, through test prior to addition of oil, that process vacuum pump oil is not hydrocarbon oil. This is implemented by testing the oil prior to addition to any process vacuum pump to verify the oil is not hydrocarbon oil, consistent with moderation assumptions in the Nuclear Criticality Safety Analyses. If the acceptance criteria are not met, then the associated oil shall not be added to the process vacuum pump.	-2	N/A
IROFS30c	PT2-5 *PB2-6 * (See Table 4.1-3)	Criticality	AC	B	Administratively limit hydrocarbon oil (moderator mass) in enriched uranium product to ensure moderation control assumptions are maintained by verifying, through test (after oil addition) prior to placing vacuum pumps in process system, that process vacuum pump oil is not hydrocarbon oil. This is implemented by testing the oil in all process vacuum pumps for hydrocarbons after bench testing, but before placing vacuum pumps in process systems to verify lack of hydrocarbon oil. This assures operation consistent with moderation assumptions in the Nuclear Criticality Safety Analyses. If the acceptance criteria are not met, then the associated vacuum pump shall not be placed in the process system.	-2	N/A

Table 3.8-1 Items Relied On For Safety (IROFS)

IROFS	Accident Sequence	Type of Accident	Type (1)	Class (2)	Description of Safety Function	FPIN (3)	FPIN Basis (4)
IROFS31a	*VR2-7 †TVR1-1 * (See Table 4.1-3) †(See Table 4.1-4)	Criticality	AC	N/A	Administratively limit ^{235}U mass in non-safe-by-design solid waste containers to ensure subcriticality by performing independent sampling and assay analysis. This is implemented by independent sampling and assay analysis of waste container contents for ^{235}U mass and limiting mass to that assumed in the Nuclear Criticality Safety Analyses before enriched uranic material is transferred and bulk stored in solid waste containers. IROFS31a is independent of IROFS31b. If the acceptance criterion is not met, then enriched uranic material shall not be transferred and bulk stored in solid waste containers.	N/A	N/A
IROFS31b	*VR2-7 †TVR1-1 * (See Table 4.1-3) † (See Table 4.1-4)	Criticality	AC	B	Administratively limit ^{235}U mass in non-safe-by-design solid waste containers to ensure subcriticality by performing independent sampling and assay analysis. This is implemented by independent sampling and assay analysis of waste container contents for ^{235}U mass and limiting mass to that assumed in the Nuclear Criticality Safety Analyses before enriched uranic material is transferred and bulk stored in solid waste containers. IROFS31b is independent of IROFS31a. If the acceptance criterion is not met, then enriched uranic material shall not be transferred and bulk stored in solid waste containers.	-2	N/A
IROFS31c	*VR2-7 †TVR1-1 *(See Table 4.1-3) †(See Table 4.1-4)	Criticality	AC	B	Administratively limit ^{235}U mass in non-safe-by-design solid waste containers to ensure subcriticality using bookkeeping procedures. This is implemented by bookkeeping procedures to limit calculated uranic mass in solid waste containers to that assumed in the Nuclear Criticality Safety Analyses for solid waste bulking operations. The calculated ^{235}U mass in solid waste containers shall be determined using bookkeeping procedures before enriched uranic material is transferred and bulk stored in solid waste containers. If the acceptance criterion is not met, then enriched uranic material shall not be transferred and bulk stored in solid waster containers.	-2	N/A

Table 3.8-1 Items Relied On For Safety (IROFS)

IROFS	Accident Sequence	Type of Accident	Type (1)	Class (2)	Description of Safety Function	FPIN (3)	FPIN Basis (4)
IROFS35	*FF6-1 FF15-1 *FF24-1 *(See Table 4.1-3)	Chemical	AEC	B	Automatic closure of fire-rated barrier opening protectives (e.g., doors, dampers, penetration seals) to ensure the integrity of area fire barriers prevents fires from propagating into areas containing uranic material. Barriers and protectives will be closed or self-closing (e.g., utilizing fusible links).	-3	3.8.3.35
IROFS36a	*FF6-1 *FF6-2 FF16-1 FF16-2 FF-WORKER EVAC *(See Table 4.1-3)	Chemical	AC	A	Administratively limit transient combustible loading in areas containing uranic material and adjacent areas to ensure integrity of uranic material components/containers and limit the quantity of uranic material at risk to ensure consequences to the public are low. Transients will be controlled to limit aggregate combustible load (transient and in-situ) in the area of concern and adjacent areas.	-3	3.8.3.36a
IROFS36a	*FF6-1 FF15-1 *FF24-1 *(See Table 4.1-3)	Chemical	AC	B	Administratively limit transient combustible loading in areas containing uranic material and adjacent areas to ensure integrity of uranic material components/containers and limit the quantity of uranic material at risk to ensure consequences to the public are low. Transients will be controlled to limit aggregate combustible load (transient and in-situ) in the area of concern and adjacent areas.	-3	3.8.3.36a
IROFS36c	FF7-1 FF42-1	Chemical	AC	A	Administratively limit onsite UF_6 cylinder transporters/movers to ensure only use of electric drive or diesel powered with a fuel capacity of less than 280 L (74 gal).	-3	3.8.3.36c

Table 3.8-1 Items Relied On For Safety (IROFS)

IROFS	Accident Sequence	Type of Accident	Type (1)	Class (2)	Description of Safety Function	FPIN (3)	FPIN Basis (4)
IROFS36d	*FF25-1 *FF25-2 FF-WORKER EVAC * (See Table 4.1-3)	Chemical	AC	A	Administratively limit transient combustible loading in areas containing uranic material and adjacent areas to ensure integrity of uranic material components/containers and limit the quantity of uranic material at risk to ensure consequences to the public are low. Transients will be controlled to limit aggregate combustible load (transient and in-situ) in the area of concern and adjacent areas. Liquid and solid waste transfer and packing containers (except as noted below) are limited to metal only. Transfer and packing container restriction does not apply to packaging within these containers (e.g., plastic liners), to bags for transporting contaminated protective clothing and similar non- or low-contamination solids, or to laboratory size sample containers (required for maintaining sample purity).	-3	3.8.3.36d
IROFS36d	*FF6-1 *FF24-1 *(See Table 4.1-3)	Chemical	AC	B	Administratively limit transient combustible loading in areas containing uranic material and adjacent areas to ensure integrity of uranic material components/containers and limit the quantity or uranic material at risk to ensure consequences to the public are low. Transients will be controlled to limit aggregate combustible load (transient and in-situ) in the area of concern and adjacent areas. Liquid and solid waste transfer and packing containers (except as noted below) are limited to metal only. Transfer and packing container restriction does not apply to packaging within these containers (e.g., plastic liners), to bags for transporting contaminated protective clothing and similar non- or low-contamination solids, or to laboratory size sample containers (required for maintaining sample purity).	-3	3.8.3.36d
IROFS36e	FF43-1	Chemical	AC	A	Administratively limit transient combustible loading on the UBC Storage Pad to ensure cylinder integrity. This is implemented by limiting vehicles allowed onto the pad to cylinder movers and essential vehicles with a fuel capacity limit of less than 280 L (74 gal) and maintaining storage pad drain-off to ensure no excessive fuel pooling.	-3	3.8.3.36e

Table 3.8-1 Items Relied On For Safety (IROFS)

IROFS	Accident Sequence	Type of Accident	Type (1)	Class (2)	Description of Safety Function	FPIN (3)	FPIN Basis (4)
IROFS36f	FF43-2	Chemical	AC	A	Administratively limit designated routes for bulk fueling vehicles onsite to ensure UBC cylinder integrity. This is implemented by limiting diesel fuel deliveries to designated routes. Diesel fuel delivery vehicles will be prohibited from entering the UBC Storage Pad perimeter road.	-3	3.8.3.36f
IROFS36g	FF44-1	Chemical	AC	A	Administratively limit onsite vegetation fire sources to ensure integrity of important targets. This is implemented by requiring clear cutting of vegetation onsite proximate to buildings and cylinders containing uranic material.	-3	3.8.3.36g
IROFS36i	FF-WORKER EVAC-CAB	Chemical	AC	B	Administratively limit transient combustible loading in areas containing uranic material to ensure integrity of uranic material components/containers and limit the quantity of uranic material at risk to ensure consequences to the worker are not high. Transients will be controlled to limit aggregate combustible load (transient and in-situ) in the area of concern.	-3	3.8.3.36i
IROFS38	TT2-2 UF2-2 PT2-4 *PB2-4 * (See Table 4.1-3)	Chemical	AC	A	Administratively limit the cylinder fill mass to ensure cylinder integrity. This is implemented at Tails Low Temperature Take-off Stations, Feed Purification Low Temperature Take-off Stations, Product Low Temperature Take-off Stations, and Product Blending Receiver Stations by verifying that cylinder weight is within specified trending limits once per shift during filling of the cylinder. Weight limit conservative with respect to assuring cylinder integrity. If the acceptance criterion is not met, then fill of the associated cylinder shall be terminated.	-3	3.8.3.38
IROFS39a	EE-SEISMIC-WORKER EVAC – CAB	Chemical	AC	A	Administratively limit exposure by requiring worker action to evacuate the area(s) of concern to ensure worker consequences of inhalation of uranic material and HF are low. This is implemented by worker evacuation from area(s) of concern in the event of a seismic event consistent with assumptions of the consequence analyses.	-2	N/A

Table 3.8-1 Items Relied On For Safety (IROFS)

IROFS	Accident Sequence	Type of Accident	Type (1)	Class (2)	Description of Safety Function	FPIN (3)	FPIN Basis (4)
IROFS39a	EE-SEISMIC-WORKER EVAC	Chemical	AC	A	Administratively limit exposure by requiring worker action to evacuate the area(s) of concern to ensure worker consequences of inhalation of uranic material and HF are low. This is implemented by worker evacuation from area(s) of concern in the event of a seismic event consistent with assumptions of the consequence analyses.	-3	3.8.3.39a
IROFS39b	FF-WORKER EVAC-CAB	Chemical	AC	A	Administratively limit exposure by requiring worker action to evacuate the area(s) of concern to ensure worker consequences of inhalation of uranic material and HF are low. This is implemented by worker evacuation from area(s) of concern in the event of a fire consistent with assumptions of the consequence analyses	-2	N/A
IROFS39b	FF-WORKER EVAC	Chemical	AC	B	Administratively limit exposure by requiring worker action to evacuate the area(s) of concern to ensure worker consequences of inhalation of uranic material and HF are low. This is implemented by worker evacuation from area(s) of concern in the event of a fire consistent with assumptions of the consequence analyses.	-2	N/A
IROFS39c	CHEM RELEASE-WORKER EVAC	Chemical	AC	A	Administratively limit exposure by requiring worker action to evacuate the area(s) of concern to ensure worker consequences of inhalation of uranic material and HF are low. This is implemented by worker evacuation from area(s) of concern in the event of a release consistent with assumptions of the consequence analyses.	-3	3.8.3.39c
IROFS39c	CHEM RELEASE – WORKER EVAC – CAB	Chemical	AC	A	Administratively limit exposure by requiring worker action to evacuate the area(s) of concern to ensure worker consequences of inhalation of uranic material and HF are low. This is implemented by worker evacuation from area(s) of concern in the event of a release consistent with assumptions of the consequence analyses.	-2	N/A

Table 3.8-1 Items Relied On For Safety (IROFS)

IROFS	Accident Sequence	Type of Accident	Type (1)	Class (2)	Description of Safety Function	FPIN (3)	FPIN Basis (4)
IROFS39d	EE-CHEM RELEASE-WORKER EVAC-CAB EE-TORNADOMISSILE-SBM-CRDB SHELL & BUNKER WORKER	Chemical	AC	A	Administratively limit exposure by requiring worker action to evacuate the area(s) of concern to ensure worker consequences of inhalation of uranic material and HF are low. This is implemented by worker evacuation from area(s) of concern in the event of severe weather consistent with assumptions of the consequence analyses.	-3	3.8.3.39d.
IROFS41	EE-SEISMIC-SBM	Chemical	PEC	B	Design features to ensure cascade system pipe leak integrity. This is implemented by design considerations applied to the Cascade Halls Area that require piping integrity during a seismic event and limiting piping leakage to outside areas to ensure offsite exposure during a seismic event maintains consequences to the public low.	-3	N/A
IROFS42	*PB4-4 * (See Table 4.1-3)	Chemical	AC	B	Administratively limit the cylinder fill mass to ensure cylinder integrity. This is implemented by determining the weight of product cylinders before placement and heating in the Product Liquid Sampling Autoclave. Weight limit conservative with respect to assuring cylinder integrity. If the acceptance criterion is not met, then the associated product cylinder shall not be heated.	-2	N/A
IROFS43	*CL3-3 * (See Table 4.1-3)	Chemical	AEC	B	Automatic trip of UF_6 sub-sampling unit hotbox heater on high hotbox internal temperature to ensure sample bottle integrity. This is implemented with a temperature switch for automatic, hardwired, fail-safe, high temperature trip of hotbox heater at UF_6 sub-sampling unit. Setpoint conservative with respect to assuring sample bottle integrity.	-2	N/A

Table 3.8-1 Items Relied On For Safety (IROFS)

IROFS	Accident Sequence	Type of Accident	Type (1)	Class (2)	Description of Safety Function	FPIN (3)	FPIN Basis (4)
IROFS45	*PB1-3 *RD1-1 * (See Table 4.1-3)	Criticality	AC	A	To ensure subcritical geometry, prior to moving a cylinder containing enriched uranium in the CRDB or the Blending and Liquid Sampling Area, verify that the stored cylinders containing enriched uranium in these areas are in a horizontal, co-planar (i.e., non-stacked), condition and that no other cylinder containing enriched uranium is in movement in the associated area. Physical separation as assumed in the Nuclear Criticality Safety Analyses is implemented by only storing Product cylinders in a horizontal co-planar (i.e., one high) array. Maintaining conditions such that only one cylinder could be inadvertently placed on horizontal storage array of other product cylinders provides a subcritical geometry as assumed in the Nuclear Criticality Safety Analyses (which analyzes one stacked cylinder as a subcritical array). This is implemented by restriction of movement and storage of product cylinders such that no more than one product cylinder could be inadvertently or accidentally stacked. If the acceptance criteria are not met, then the cylinder containing enriched uranium shall not be moved.	-3	3.8.3.45
IROFS46	*CL3-2 * (See Table 4.1-3)	Chemical	AC	B	Administratively verify that product samples are in a solid state, prior to transfer of product samples for assay analysis, to ensure worker consequences of inhalation of uranic material and HF are low. This is implemented by visual inspection of the product sample, prior to transfer from the sample rig, to ensure the sample material is in a solid state. If the acceptance criterion is not met, then the transfer of product samples for assay analysis shall not be initiated.	-2	N/A
IROFS47a	*PB3-3 * (See Table 4.1-3)	Chemical	PEC	B	Flow restriction to ensure, in the event of postulated release, worker consequences of inhalation of uranic material and HF are low. This is implemented by a valve, on the suction of the vacuum pump, with a maximum flow rate that is less than the flow rate assumption of the consequence analyses.	-3	N/A

Table 3.8-1 Items Relied On For Safety (IROFS)

IROFS	Accident Sequence	Type of Accident	Type (1)	Class (2)	Description of Safety Function	FPIN (3)	FPIN Basis (4)
IROFS47b	*VR1-5 * (See Table 4.1-3)	Chemical	PEC	B	Flow restriction to ensure, in the event of postulated release, worker consequences of inhalation of uranic material and HF are low. This is implemented by a valve, on the suction of the vacuum pump, blocked such that the maximum flow rate is less than the flow rate assumption of the consequence analyses.	-3	N/A
IROFSC22	EC3-1	Criticality	AC	A	Administratively perform the cascade process mass balance on a periodic basis to ensure subcriticality. This is implemented by ensuring the mass balance is performed accurately, and the change in mass is consistent with expected changes based on the enrichment settings and consistent with the Nuclear Criticality Safety Analysis to ensure subcriticality within the designated process and analyzed activities	-3	3.8.3C22
IROFSC15	TP8-1	Chemical	AEC	B	Automatic trip of the Centrifuge Test Facility feed/take-off vessel Huber Unistat 815 heater unit on high temperature to ensure feed/take-off vessel integrity. This is implemented with a thermocouple temperature sensor for automatic, hardwired, fail-safe, high temperature trip of the Centrifuge Test Facility feed/take-off vessel Huber Unistat 815 heater unit. Setpoint based on centrifuge integrity calculation.	-2	N/A
IROFSC16	TP8-1	Chemical	AEC	B	Automatic trip of the Centrifuge Test Facility feed/take-off vessel Huber Unistat 815 heater unit on high temperature to ensure feed/take-off vessel integrity. This is implemented with a RTD temperature sensor for automatic, hardwired, fail-safe, high temperature trip of the Centrifuge Test Facility feed/take-off vessel Huber Unistat 815 heater unit. Setpoint conservative with respect to assuring feed/take-off vessel integrity.	-2	N/A

Table 3.8-1 Items Relied On For Safety (IROFS)

IROFS	Accident Sequence	Type of Accident	Type (1)	Class (2)	Description of Safety Function	FPIN (3)	FPIN Basis (4)
IROFSC21	TT3-1 EC4-1 UF2-3 PT5-1 *MR3-1 *MR3-2 * (See Table 4.1-3)	Chemical	PEC	A	Flow restriction to ensure in the event of a release that worker consequences of inhalation of uranic material and HF are low. This is implemented by a passive engineered flow restriction device on the suction of the vacuum pump such that the maximum flow rate is less than the flow rate assumption of the consequence analysis.	-3	N/A
IROFS50a	OC1-1	Chemical	AC	B	Administratively control proximity of site preparations vehicles around the UBC Storage Pad to prevent a fire from an impact with UBCs resulting in a release of UF_6. This is implemented by establishing a temporary barrier of sufficient strength to alert the vehicle operator upon impact with the barrier. The barrier is placed at a minimum distance of 30 feet from the cylinders on the UBC Storage Pad to allow the vehicle operator sufficient distance to stop or alter course prior to reaching the cylinders on the UBC Storage Pad.	-2	3.8.3.50a
IROFS50b	OC2-1	Chemical	AC	B	Administratively control proximity of external site preparations vehicles around areas of concern to prevent an impact with areas of conern resulting in a release of UF_6. This is implemented by establishing a temporary barrier of sufficient strength to alert the vehicle operator upon impact with the barrier. The barrier is placed at a minimum distance of 30 feet from areas of concern to allow the vehicle operator sufficient distance to stop or alter course prior to reaching the areas of concern.	-2	3.8.3.50b

Table 3.8-1 Items Relied On For Safety (IROFS)

IROFS	Accident Sequence	Type of Accident	Type (1)	Class (2)	Description of Safety Function	FPIN (3)	FPIN Basis (4)
IROFS50c	OC2-1	Chemical	AC	B	Administratively control proximity of external site preparations vehicles around areas of concern to prevent an impact with areas of concern resulting in a release of UF_6. This is implemented by establishing a second and independent temporary barrier of sufficient strength to alert the vehicle operator upon impact with the barrier. The barrier is placed at a minimum distance of 30 feet from the area of concern to allow the vehicle operator sufficient distance to stop or alter course prior to reaching areas of concern.	-2	3.8.3.50c
IROFS50d	OC3-1	Chemical	AC	B	Administratively control proximity of internal construction vehicles relative to operating process equipment of concern to prevent a release of UF_6 associated with an impact. This is implemented by establishing an appropriate barrier to alter the operator of proximity to operating process equipment of concern.	-2	N/A
IROFS50e	OC3-1	Chemical	AC	B	Administratively control movement of internal construction vehicles to prevent impact with operating process equipment of concern resulting in a release of UF_6. This is implemented by requiring the use of a spotter to independently monitor and supervise internal construction vehicle movement relative to the operating process equipment of concern.	-1	N/A
IROFS50f	OC4-1	Chemical	AC	B	Administratively control proximity of external construction cranes around the areas of concern to prevent a release of UF_6. This is implemented by establishing a No Swing Zone when the crane is closer than a safe distance from an operating area of concern.	-3	3.8.3.50f
IROFS50g	OC4-1	Chemical	AC	B	Administratively control movement of external construction cranes around the areas of concern to prevent a release of UF_6. This is implemented by requiring the use of a spotter to independently monitor and supervise external construction crane movement relative to the operating area of concern.	-1	N/A

Table 3.8-1 Items Relied On For Safety (IROFS)

IROFS	Accident Sequence	Type of Accident	Type (1)	Class (2)	Description of Safety Function	FPIN (3)	FPIN Basis (4)
IROFS50h	OC1-1	Chemical	AC	B	Administratively control proximity of site preparations vehicles around the UBC Storage Pad to prevent a fire from an impact with UBCs resulting in a release of UF_6. This is implemented by establishing a second and independent temporary barrier of sufficient strength to alert the vehicle operator upon impact with the barrier. The barrier is placed at a minimum distance of 30 feet from the cylinders on the UBC Storage Pad to allow the vehicle operator sufficient distance to stop or alter course prior to reaching the cylinder on the UBC Storage Pad.	-2	3.8.3.50h

Notes:

1. Type of IROFS:
   - PEC - Passive Engineered Control: A device that uses only fixed physical design features to maintain safe process conditions without any required human action.
   - AEC - Active Engineered Control: A physical device that uses active sensors, electrical components, or moving parts to maintain safe process conditions without any required human action.
   - AC - Administrative Control: A procedural human action that is prohibited or required to maintain safe process conditions.
2. Class of IROFS
   - "A" – Sole IROFS. Refer to Section 3.8.2 and Table 3.8-2.
   - "B" – An IROFS which is one of two preventative or mitgative IROFS for the identified sequence(s). Refer to the applicable accident sequences in Table 3.7-2 or Table 3.7-4 for identification of other IROFS relied upon.
   - "N/A" –IROFS is not expressly associated with a preventive or mitigative control for the identified sequence(s).
3. FPIN – Failure Probability Index Numbers from ISA, based on Risk Indexing Methodology described in Section 3.1. When IROFS is not expressly associated with a preventive or mitigative control for the identified sequence(s). "N/A is specified. Refer to the applicable accident sequence description in Table 3.7-2 or Table 3.7-4 for initating event frequency index number.
4. Section referenced provides basis for IROFS Type AC that is considered "enhanced" and for IROFS Type AEC that is considered to have "high availability." "N/A" indicates that the FPIN reflects the lower absolute value norminally assigned to the Type of IROFS as indicated in Table 3.1-10 that is supported by the general Management Measures applicable to all IROFS (refer to Section 3.1.8.3).

Table 3.8-2 Sole Items Relied On For Safety (IROFS)

IROFS Identifier	Accident Sequence	Type of Accident	Type of IROFS	Title
IROFS10	PB4-1 PB4-3	Chemical	PEC	Design feature to maintain Product Liquid Sampling Autoclave leak tight integrity.
IROFS14a	FR1-1 FR2-1 DS1-1 DS2-1 DS3-1 SW1-1 LW1-2 TVR1-2	Criticality	AC	Administratively restrict proximity of vessels in non-designed locations containing enriched uranic material to ensure subcritical configuration.
IROFS14b	FR1-2 FR2-2 DS1-2 DS2-2 DS3-2 SW1-2 LW1-3 TVR1-3	Criticality	AC	Administratively restrict proximity of vessels in non-designed locations containing enriched uranic material to ensure subcritical configuration.
IROFS15	PT3-5	Criticality	AC	Administratively restrict an independent parameter of the criticality sequence to ensure subcriticality configuration by preventing additional transfer of enriched uranic material to another container if that container contains enriched uranic material and is a non-safe-by-design container.
IROFS16a	PB2-2 CP1-2	Criticality	AC	Administratively limit moderator mass (oil and water) in cylinders containing enriched uranic material to ensure subcriticality by allowing no visible oil and limiting cylinder vapor pressure.
IROFS23a	VR1-3	Chemical	AC	Administrative use of personal respiratory protection to ensure that inhalation of uranic material and HF consequences are low.
IROFS23b	VR2-1	Chemical	AC	Administrative use of personal respiratory protection to ensure that inhalation of uranic material and HF consequences are low.

Table 3.8-2 Sole Items Relied On For Safety (IROFS)

IROFS Identifier	Accident Sequence	Type of Accident	Type of IROFS	Title
IROFS27c	EE-TORNADO, TORNADO MISSILE & HIGH WIND-CRDB BUNKER (T) EE-SNOW – CRDB BUNKER (T) EE-LP-CRDB BUNKER (T)	Chemical	PEC	Design feature of buildings containing UF_6 process systems for seismic, tornado, tornado missile, high wind, roof snow load, and for roof ponding and site flooding due to local intense precipitation, to ensure UF_6 process systems integrity.
IROFS27e	EE-SNOW-SBM-CRDB SHELL (T) EE-LP-SBM-CRDB SHELL (T) EE-TORNADO & HIGH WIND – SBM-CRDB SHELL (T) EE-SEISMIC-CRDB SHELL (T)	Chemical	PEC	Design feature of SBMs and the CRDB superstructure (not including the Bunkered Area) for seismic, tornado, high wind, roof snow load, roof ponding and site flooding due to local intense precipitation, to ensure a chemical release does not exceed the 10 CFR 70.61 performance requirements.
IROFS28	EE-TORNADO MISSILE-SBM-PUBLIC	Chemical	PEC	Design feature to maintain Product Liquid Sampling Autoclave leak tight integrity.
IROFS36a	FF6-2 FF16-1 FF16-2	Chemical	AC	Administratively limit transient combustible loading in areas containing uranic material to ensure integrity of uranic material components/containers and limit the quantity of uranic material at risk to ensure consequences to the public are low.
IROFS36c	FF7-1 FF42-1	Chemical	AC	Administratively limit onsite UF_6 cylinder transporters/movers to ensure only use of electric drive or diesel powered with a fuel capacity of less than 280 L (74 gal).
IROFS36d	FF25-1 FF25-2	Chemical	AC	Administratively limit transient combustible loading in areas containing uranic material to ensure integrity of uranic material components/containers and limit the quantity of uranic material at risk to ensure consequences to the public are low.
IROFS36e	FF43-1	Chemical	AC	Administratively limit transient combustible loading on the UBC Storage Pad to ensure cylinder integrity.

Table 3.8-2 Sole Items Relied On For Safety (IROFS)

IROFS Identifier	Accident Sequence	Type of Accident	Type of IROFS	Title
IROFS36f	FF43-2	Chemical	AC	Administratively limit designated routes for bulk fueling vehicles onsite to ensure UBC cylinder integrity.
IROFS36g	FF44-1	Chemical	AC	Administratively limit onsite vegetation fire sources to ensure integrity of important targets.
IROFS38	TT2-2 UF2-2 PT2-4 PB2-4	Chemical	AC	Administratively limit the cylinder fill mass to ensure cylinder integrity.
IROFS39a	EE-SEISMIC-WORKER EVAC EE-SEISMIC – WORKER EVAC-CAB	Chemical	AC	Administratively limit exposure by requiring worker action to evacuate area(s) of concern to ensure worker consequences of inhalation of uranic material and HF are low.
IROFS39b	FF-WORKER-EVAC-CAB	Chemical	AC	Administratively limit exposure by requiring worker action to evacuate area(s) of concern to ensure worker consequences of inhalation of uranic material and HF are low.
IROFS39c	CHEM RELEASE-WORKER EVAC CHEM RELEASE - WORKER EVAC -CAB	Chemical	AC	Administratively limit exposure by requiring worker action to evacuate area(s) of concern to ensure worker consequences of inhalation of uranic material and HF are low.
IROFS39d	EE-CHEM RELEASE-WORKER EVAC-CAB EE-TORNADO MISSILE – SBM – CRDB SHELL & BUNKER WORKER (T)	Chemical	AC	Administratively limit exposure by requiring worker action to evacuate area(s) of concern to ensure worker consequences of inhalation of uranic material and HF are low.
IROFS45	PB1-3 RD1-1	Criticality	AC	To ensure subcriticality geometry, prior to moving a cylinder containing enriched uranium in the CRDB or the Blending and Liquid Sampling Area, verify that the stored cylinders containing enriched uranium in these areas are in a horizontal, co-planar (i.e., non-stacked), condition and that no other cylinder containing enriched uranium is in movement in the associated area.

Table 3.8-2 Sole Items Relied On For Safety (IROFS)

IROFS Identifier	Accident Sequence	Type of Accident	Type of IROFS	Title
IROFSC22	EC3-1	Criticality	AC	Administratively perform the cascade process mass balance on a periodic basis to ensure subcriticality.
IROFSC21	TT3-1 EC4-1 UF2-3 PT5-1 MR3-1 MR3-2	Chemical	PEC	Flow restriction to ensure in the event of a release that worker consequences of inhalation of uranic material and HF are low.

4.0 PHASED OPERATION

Note: SAR Section 12.0 is the plan for proceeding with Phased Operation. The tables below show the differences between the Accident Sequences and IROFS and the Phased Operation Accident Sequences and IROFS including Transitional Accident Sequences that were identified.

4.1 ACCIDENT SEQUENCE / IROFS DIFFERENCES

4.1.1 Existing Accident Sequences

Tables 4-1 and 4-2 identify accident sequences that are not applicable for each phase of the specific phases of the Phased Operation approach. The justification for the accident sequence not being applicable for a particular phase is included in columns 3, 4, and 5:

Table 4.1-1 (Table 3.7-2) Affected Accident Sequence Descriptions

Accident Sequence	Description and Applicable IROFS	Justification		
		Initial Plant Operations (IPO)	Production Phase 1a and 1b	Production Phase 2
PT3-5	Transfer of enriched uranic material during decontamination/waste disposal into a non-safe-by-design container from washing flex hose, emptying carbon trap, draining oil from product pump, scraping breakdown materials from product internals. • (IROFS15) Administratively restrict an independent parameter of the criticality sequence to ensure subcritical configuration by preventing additional transfer of enriched uranic material to another container if that container contains enriched uranic material and is non-safe-by-design container.	The activities associated with this accident sequence are not conducted during IPO as the CRDB and necessary equipment are not available.	The activities associated with this accident sequence are not conducted during Production Phase 1a or 1b as the CRDB and necessary equipment are not available	Applicable
MR3-1	The initial failure (initiating event) is an error that results in an inadvertent open pressure transducer isolation valve on the upstream side of the pressure transducer being calibrated. This causes excessive flow of UF_6 resulting in the Mobile Pressure Transducer Calibration Rig mixed-bed trap becoming saturated. • (IROFSC21) Flow restriction to ensure in the event of a release that worker consequences of inhalation of uranic material and HF are low.	The Pressure Transducer Calibration Rig is limited to use in non UF_6 contaminated systems during IPO	The Pressure Transducer Calibration Rig is limited to use in non UF_6 contaminated systems during Production Phase 1a or 1b	Applicable
MR3-2	The initial failure (initiating event) is an error that results in an inadvertent open pressure transducer isolation valve on the upstream side of the pressure transducer being calibrated. This causes excessive flow of UF_6 resulting in flow directly through the turbo pupmp of the Mobile Pressure Transducer Calibration Rig. • (IROFSC21) Flow restriction to ensure in the event of a release that worker consequences of inhalation of uranic material and HF are low.	The Pressure Transducer Calibration Rig is limited to use in non UF_6 contaminated systems during IPO	The Pressure Transducer Calibration Rig is limited to use in non UF_6 contaminated systems during Production Phase 1a or 1b	Applicable

Table 4.1-1 (Table 3.7-2) Affected Accident Sequence Descriptions

Accident Sequence	Description and Applicable IROFS	Justification		
		Initial Plant Operations (IPO)	Production Phase 1a and 1b	Production Phase 2
PB1-1	Blending donor station heater controller fails on resulting in a hydraulic rupture of the cylinder. • (IROFS4) Automatic trip of station heaters on high station internal air temperature to ensure cylinder integrity • (IROFS5) Automatic trip of station heaters on high station internal air temperature to ensure cylinder integrity	Cylinders are stored in the Stations. Thereare no blending operations conducted.	Cylinders are stored in the Stations. Thereare no blending operations conducted in Production Phase 1a.	Applicable
PB1-3	Placing a product 30B cylinders into a non-safe criticality interaction arrangement resulting in a criticality event. • (IROFS45) Prior to moving a cylinder containing enriched uranium in the CRDB or the Blending and Liquid Sampling Area, verify that the stored cylinders containing enriched uranium in are in a horizontal, co-planar (i.e., non-stacked), condition and that no other cylinder containing enriched uranium is in movement in the associated area	Cylinders arestored in the Stations. There are no blending operations conducted.	Cylinders arestored in the Stations. There are no blending operations conducted inProduction Phase 1a.	Applicable
PB2-1	Blending receiver station cold box defrost heater controller fails on resulting in a hydraulic rupture of the cylinder. • (IROFS1) Automatic trip of defrost heater and fan on high air return temperature to ensure cylinder integrity • (IROFS2) Automatic trip of defrost heater and fan on high station internal air temperature to ensure cylinder integrity	Cylinders are stored in the Stations. There are no blending operations conducted.	Cylinders are stored in the Stations. There are no blending operations conducted in Production Phase 1a.	Applicable

Table 4.1-1 (Table 3.7-2) Affected Accident Sequence Descriptions

Accident Sequence	Description and Applicable IROFS	Justification		
		Initial Plant Operations (IPO)	Production Phase 1a and 1b	Production Phase 2
PB2-2	Excessive moderator introduced into the receiver cylinder before being put in the blending receiver station resulting in a criticality event. • (IROFS16a) Administratively limit moderator mass (oil and water) in cylinders containing enriched uranic material by limiting cylinder vapor pressure prior to introducing product	Cylinders are stored in the Stations. There are no blending operations conducted.	Cylinders are stored in the Stations. There are no blending operations conducted in Production Phase 1a.	Applicable
PB2-4	Failure of the blending receiver low temperature take-off station load cell causing the cylinder to be over filled. The over filled cylinder is then warmed to ambient and ruptures. • (IROFS38) Administratively limit the cylinder fill mass by verifying cylinder weight is within specified trending limits once per shift during filling of the cylinder	Cylinders are stored in the Stations. There are no blending operations conducted.	Cylinders are stored in the Stations. There are no blending operations conducted in Production Phase 1a.	Applicable
PB2-6	Hydrocarbon oil (a moderator) is used in place of per fluorinated polyether (PFPE) oil during maintenance of Ventilated Room, and Blending and Liquid Sampling System vacuum pumps resulting in a criticality event. • (IROFS30a) Administratively limit hydrocarbon oil (moderator mass) to ensure moderation control assumptions are maintained by controlling the type of oil used in process vacuum pumps • (IROFS30b) Administratively verify, through testing prior to addition of oil, that process vacuum pump oil is not hydrocarbon oil • (IROFS30c) Administratively verify, through testing after addition of oil, that process vacuum pump oil is not hydrocarbon oil	Ventilated Room, and Blending and Liquid Sampling System are not available for initial plant operations.	This sequence is applicable to the Blending and Liquid Sampling System Production Phase 1a. The Ventilated Room is not available for Production Phase 1a or 1b operations.	Applicable

Table 4.1-1 (Table 3.7-2) Affected Accident Sequence Descriptions

Accident Sequence	Description and Applicable IROFS	Justification		
		Initial Plant Operations (IPO)	Production Phase 1a and 1b	Production Phase 2
PB3-3	Blending and Sampling Vent carbon trap becomes saturated with UF_6 resulting in a release from the vacuum pump due to a plug in the discharge causing the seals to fail on high pressure. • (IROFS3) Automatic trip of the vacuum pump on carbon trap high weight • (IROFS47a) A flow restriction to ensure, in the event of a postulated release, worker consequences of inhalation of uranic material and HF are low	Cylinders are stored in the Stations. There are no blending operations conducted.	Cylinders are stored in the Stations. There are no blending operations conducted in Production Phase 1a.	Applicable
PB4-1	Product liquid sampling autoclave heater failure (heat off) followed by reheat. Solidification of UF_6 in the sampling manifold isolates pressure trips. Upon reheat, the sampling manifold ruptures. • (IROFS10) Design feature to maintain Product Liquid Sampling Autoclave leak tight integrity	Cylinders are stored in the Stations. There are no liquid sampling operations conducted.	Cylinders are stored in the Stations. There are no liquid sampling operations conducted in Production Phase 1a.	Applicable
PB4-2	Product liquid sampling autoclave heater controller fails on resulting in a hydraulic rupture of the cylinder. • (IROFS11) Automatic trip of the autoclave heater and fan on autoclave high internal air temperature • (IROFS12) Automatic trip of the autoclave heater and fan on autoclave high internal air pressure	Cylinders are stored in the Stations. There are no liquid sampling operations conducted.	Cylinders are stored in the Stations. There are no liquid sampling operations conducted.	Applicable
PB4-3	Sampling manifold purge valve left open and blind flange not fitted. Upon liquid sample heat up and tipping of the liquid sampling autoclave, the sampling manifold releases liquid UF_6 into the autoclave. • (IROFS10) Design feature to maintain Product Liquid Sampling Autoclave leak tight integrity	Cylinders are stored in the Stations. There are no liquid sampling operations conducted.	Cylinders are stored in the Stations. There are no liquid sampling operations conducted in Production Phase 1a.	Applicable

Table 4.1-1 (Table 3.7-2) Affected Accident Sequence Descriptions

Accident Sequence	Description and Applicable IROFS	Justification		
		Initial Plant Operations (IPO)	Production Phase 1a and 1b	Production Phase 2
PB4-4	Over filled product cylinder heated in the sampling autoclave results in cylinder rupture. ▪ • (IROFS10) Design feature to maintain Product Liquid Sampling Autoclave leak tight integrity(IROFS42) Administratively limit the cylinder fill mass prior to placement and heating	Cylinders are stored in the Stations. There are no liquid sampling operations conducted.	Cylinders are stored in the Stations. There are no liquid sampling operations conducted in Production Phase 1a.	Applicable
VR1-1	Vessel pressure test/valve change rig carbon trap becomes saturated with UF_6 by a small UF_6 leak through a process valve in the vessel pressure test/valve change rig releasing UF_6 into the SB GEVS resulting in a criticality event. • (IROFS3) Automatic trip of the vacuum pump on carbon trap high weight • (IROFS21) Automatic trip of the SB GEVS on ^{235}U selective high.high gamma	This operation is not conducted because the rig and the Ventilated Room are not available for use.	This operation is not conducted because the rig and the Ventilated Room are not available for use.	Applicable
VR1-2	Excessive opening the cold trap outlet throttle valve in the cylinder vent system resulting in high UF_6 flow and high temperature in the carbon trap and release of UF_6 into the SB GEVS resulting in a criticality event. • (IROFS21) an automatic trip of the SB GEVS on ^{235}U selective high.high gamma ▪ (IROFS22) Automatic trip of the vacuum pump on carbon trap high temperature	This operation is not conducted because the Ventilated Room and associated system is not available for use.	This operation is not conducted because the Ventilated Room and associated system is not available for use.	Applicable

Table 4.1-1 (Table 3.7-2) Affected Accident Sequence Descriptions

Accident Sequence	Description and Applicable IROFS	Justification		
		Initial Plant Operations (IPO)	Production Phase 1a and 1b	Production Phase 2
VR1-3	Failure of a cylinder superior valve or the flexible piping of a cylinder containing UF_6 undergoing a cylinder pressure test after repair/replacement of a leaking cylinder component. • (IROFS23a) Administrative use of personnel respiratory protection when performing positive pressure testing of a UF_6 cylinder after repair/replacement of a leaking cylinder component	Positive pressure testing of cylinders is not conducted.	Positive pressure testing of cylinders is not conducted.	Applicable
VR1-5	Vent subsystem carbon trap becomes saturated with UF_6 caused by a small UF_6 leak through a ventilated room mobile pump and trap rig cold trap valve resulting in a release from the vacuum pump due to a plug in the discharge causing the seals to fail on high pressure. • (IROFS3) Automatic trip of the vacuum pump on carbon trap high weight • (IROFS47b) A flow restriction to ensure worker consequences of inhalation of uranic material and HF are low	This operation is not be conducted because the ventilated room and rig are not available for use.	This operation is not be conducted because the ventilated room and rig are not available for use.	Applicable
VR2-1	Loss of containment of a chemical trap and pouring of the contents of the trap into the Ventilated Room cause by operator error in unloading a carbon trap or impact to a carbon trap. • (IROFS23b) Administrative use of personnel respiratory protection	This operationis not conducted because the ventilated room and rigare not available for use.	This operationis not conducted because the ventilated room and rigare not available for use.	Applicable

Table 4.1-1 (Table 3.7-2) Affected Accident Sequence Descriptions

Accident Sequence	Description and Applicable IROFS	Justification		
		Initial Plant Operations (IPO)	Production Phase 1a and 1b	Production Phase 2
VR2-2	Loss of containment of a chemical dump trap and pouring of the contents of the trap into the Ventilated Room cause could be operator error in unloading a chemical dump trap or impact to a chemical dump trap. • (IROFS23b) Administrative use of personnel respiratory protection • (IROFS24a) Administrative establishment of airflow away from the worker	This operation is not conducted as the required equipment is not available.	This operation is not conducted as the required equipment is not available.	Applicable
VR2-7	Sufficient uranic mass accumulation from transfer of carbon containing enriched uranic material to cause criticality in a solid waste container. • (IROFS31a) Administratively limit ^{235}U mass in non-safe-by-design solid waste containers to ensure subcriticality by performing independent sampling and assay analysis (independent of IROFS31b). • (IROFS31b) Administratively limit ^{235}U mass in non-safe-by-design solid waste containers to ensure subcriticality by performing independent sampling and assay analysis (independent of IROFS31a). • (IROFS31c) Administratively limit ^{235}U mass in non-safe-by-design solid waste containers to ensure subcriticality using bookkeeping procedures.	A similar accident sequence (TVR1-1) is applicable to the new storage room in the SBM and IROFS31a, 31b, and 31c are applied to the room.	A similar accident sequence (TVR1-1) is applicable to the new storage room in the SBM and IROFS31a, 31b, and 31c are applied to the room.	Applicable

Table 4.1-1 (Table 3.7-2) Affected Accident Sequence Descriptions

Accident Sequence	Description and Applicable IROFS	Justification		
		Initial Plant Operations (IPO)	Production Phase 1a and 1b	Production Phase 2
FR1-1	The accident sequence is the combination of numerous conditions assumed to lead to a criticality in a PFPE Oil waste container being transported: -a uranyl fluoride/water mixture at an H/U atomic ratio near optimum moderation, -nearly or completely filled with the above material at a high enough enrichment to achieve a configuration favorable for criticality -interaction (i.e., proximity limit not maintained) with more than one component containing fissile material, • (IROFS14a) Administratively restrict proximity of vessels in non.designed locations containing enriched uranic material by verifying the use of a safe.by.design transfer frame prior to movement of the associated waste container containing enriched uranic material	A similar accident sequence (TVR1-2) is applicable to the new storage room in the SBM and IROFS14a is applied to the room.	A similar accident sequence (TVR1-2) is applicable to the new storage room in the SBM and IROFS14a is applied to the room.	Applicable

Table 4.1-1 (Table 3.7-2) Affected Accident Sequence Descriptions

Accident Sequence	Description and Applicable IROFS	Justification		
		Initial Plant Operations (IPO)	Production Phase 1a and 1b	Production Phase 2
FR1-2	The accident sequence is the combination of numerous conditions assumed to lead to a criticality in a PFPE Oil waste container being stored: -a uranyl fluoride/water mixture at an H/U atomic ratio near optimum moderation, -nearly or completely filled with the above material at a high enough enrichment to achieve a configuration favorable for criticality -interaction (i.e., proximity limit not maintained) with more than one component containing fissile material, • (IROFS14b) Administratively restrict proximity of vessels in non-designed locations containing enriched uranic material by verifying the associated storage array condition is acceptable, prior to moving a waste container within 180 cm of the associated storage array	A similar accident sequence (TVR1-3) is applicable to the new storage room in the SBM and IROFS14a is applied to the room.	A similar accident sequence (TVR1-3) is applicable to the new storage room in the SBM and IROFS14a is applied to the room.	Applicable
FR2-1	This accident sequence is identical to sequence FR1-1, except it is located in the hydrocarbon removal portion of PFPE Oil Recovery System. • (IROFS14a) Administratively restrict proximity of vessels in non-designed locations containing enriched uranic material by verifying the use of a safe-by-design transfer frame prior to movement of the associated waste container containing enriched uranic material	This accident sequence is not applicable because the PFPE Oil Recovery Systemis not available.	This accident sequence is not applicable because the PFPE Oil Recovery System is not available.	This accident sequence is not credible because thePFPE Oil Recovery System is not available.

Table 4.1-1 (Table 3.7-2) Affected Accident Sequence Descriptions

Accident Sequence	Description and Applicable IROFS	Justification		
		Initial Plant Operations (IPO)	Production Phase 1a and 1b	Production Phase 2
FR2-2	This accident sequence is identical to sequence FR1.2, except it is located in the hydrocarbon removal portion of PFPE Oil Recovery System. • (IROFS14b) Administratively restrict proximity of vessels in non.designed locations containing enriched uranic material by verifying the associated storage array condition is acceptable, prior to moving a waste container within 180 cm of the associated storage array	This accident sequence is not applicable because the PFPE Oil Recovery Systemis not available.	This accident sequence is not applicable because the PFPE Oil Recovery System is not available.	This accident sequence is not credible because the PFPE Oil Recovery System is not available.
DS1-1	This accident sequence is identical to sequence FR1.1, except it is located in the Equipment Decontamination System. • (IROFS14a) Administratively restrict proximity of vessels in non.designed locations containing enriched uranic material by verifying the use of a safe.by.design transfer frame prior to movement of the associated waste container containing enriched uranic material	This accident sequence is not applicable because the Decontamination Workshop is not available.	This accident sequence is not applicable because the Decontamination Workshop is not available.	Applicable
DS1-2	This accident sequence is identical to sequence FR1.2, except it is located in the Equipment Decontamination System. • (IROFS14b) Administratively restrict proximity of vessels in non.designed locations containing enriched uranic material by verifying the associated storage array condition is acceptable, prior to moving a waste container within 180 cm of the associated storage array	This accident sequence is not applicable because the Decontamination Workshop is not available.	This accident sequence is not applicable because the Decontamination Workshop is not available.	Applicable

Table 4.1-1 (Table 3.7-2) Affected Accident Sequence Descriptions

Accident Sequence	Description and Applicable IROFS	Justification		
		Initial Plant Operations (IPO)	Production Phase 1a and 1b	Production Phase 2
DS1-3	Accumulation of sufficient uranium mass to cause criticality in the decontamination tank. • (IROFS19a) Administratively limit the calculated tank uranic mass inventory using bookkeeping procedures to determine calculated tank uranic mass inventory prior to transfer • (IROFS19c) Administratively limit measured tank uranic mass inventory to ensure a subcritical mass by performing independent sampling and measurement independent of IROFS19d • (IROFS19d) Administratively limit measured tank uranic mass inventory to ensure a subcritical mass by performing independent sampling and measurement independent of IROFS19c	This accident sequence is not applicable because the Decontamination Workshop is not available.	This accident sequence is not applicable because the Decontamination Workshop is not available.	Applicable
DS2-1	This accident sequence is identical to sequence FR1.1, except it is located in the Flexible Hose Decontamination System. • (IROFS14a) Administratively restrict proximity of vessels in non.designed locations containing enriched uranic material by verifying the use of a safe.by.design transfer frame prior to movement of the associated waste container containing enriched uranic material	This accident sequence is not applicable because the Decontamination Workshop is not available.	This accident sequence is not applicable because the Decontamination Workshop is not available.	Applicable
DS2-2	This accident sequence is identical to sequence FR1.2, except it is located in the Flexible Hose Decontamination System. • (IROFS14b) Administratively restrict proximity of vessels in non.designed locations containing enriched uranic material by verifying the associated storage array condition is acceptable, prior to moving a waste container within 180 cm of the associated storage array	This accident sequence is not applicable because the Decontamination Workshop is not available.	This accident sequence is not applicable because the Decontamination Workshop is not available.	Applicable

Table 4.1-1 (Table 3.7-2) Affected Accident Sequence Descriptions

Accident Sequence	Description and Applicable IROFS	Justification		
		Initial Plant Operations (IPO)	Production Phase 1a and 1b	Production Phase 2
DS2-3	Accumulation of sufficient uranium mass in the first rinse tank to cause criticality. • (IROFS19a) Administratively limit the calculated tank uranic mass inventory using bookkeeping procedures to determine calculated tank uranic mass inventory prior to transfer • (IROFS19c) Administratively limit measured tank uranic mass inventory to ensure a subcritical mass by performing independent sampling and measurement independent of IROFS19d • (IROFS19d) Administratively limit measured tank uranic mass inventory to ensure a subcritical mass by performing independent sampling and measurement independent of IROFS19c	This accident sequence is not applicable because the Decontamination Workshop is not available.	This accident sequence is not applicable because the Decontamination Workshop is not available.	Applicable
DS3-1	This accident sequence is identical to sequence FR1.1, except it is located in the Equipment Decontamination System. • (IROFS14a) Administratively restrict proximity of vessels in non.designed locations containing enriched uranic material by verifying the use of a safe.by.design transfer frame prior to movement of the associated waste container containing enriched uranic material.	This accident sequence is not applicable because the Decontamination Workshop is not available.	This accident sequence is not applicable because the Decontamination Workshop is not available.	Applicable
DS3-2	This accident sequence is identical to sequence FR1.2, except it is located in the Equipment Decontamination System. • (IROFS14b) Administratively restrict proximity of vessels in non.designed locations containing enriched uranic material by verifying the associated storage array condition is acceptable, prior to moving a waste container within 180 cm of the associated storage array	This accident sequence is not applicable because the Decontamination Workshop is not available.	This accident sequence is not applicable because the Decontamination Workshop is not available.	Applicable

Table 4.1-1 (Table 3.7-2) Affected Accident Sequence Descriptions

Accident Sequence	Description and Applicable IROFS	Justification		
		Initial Plant Operations (IPO)	Production Phase 1a and 1b	Production Phase 2
CL3-1	No liquid nitrogen in the Dewar cold trap of the Sub.Sampling System in the chemical laboratory which results in a cold trap temperature above the UF_6 sublimination temperature. The liquid UF_6 sublimes to a gas and is pumped by the vacuum pump and is transferred to the CRDB GEVS resulting in a criticality event. • (IROFS20) Automatic isolation of cold trap on cold trap high temperature • (IROFS21) Automatic trip of the CRDB GEVS on ^{235}U selective high.high gamma	This accident sequence is not applicable because the Sub-Sampling System is not available.	This accident sequence is not applicable because the Sub-Sampling System is not available.	Applicable
CL3-2	No liquid nitrogen in the UF_6 cold trap which results in a cold trap temperature above the UF_6 sublimination temperature. During the process of transferring product samples for assay analysis, liquid UF_6 flashes to gas resulting in a release of UF_6 to the atmosphere exposing the worker. • (IROFS24b) Administrative establishment of airflow away from worker • (IROFS46) Administrative verification that product samples are in a solid state, prior to transfer	Chemistry Lab is not available.	Chemistry Lab is not available.	Applicable
CL3-3	UF_6 sub.sampling unit heater controller fails on resulting in a hydraulic rupture of the sample bottle. • (IROFS24b) Administrative establishment of air flow away from the worker ▪ (IROFS43) Automatic trip of UF_6 sub-sampling unit hotbox heater or high hotbox internal temperature	This accident sequence is not credible because the Sub-Sampling System is not available.	This accident sequence is not credible because the Sub-Sampling System is not available.	Applicable

Table 4.1-1 (Table 3.7-2) Affected Accident Sequence Descriptions

Accident Sequence	Description and Applicable IROFS	Justification		
		Initial Plant Operations (IPO)	Production Phase 1a and 1b	Production Phase 2
SW1-1	This accident sequence is identical to sequence FR1.1, except it is located in the solid waste collection system.• (IROFS14a) Administratively restrict proximity of vessels in non.designed locations containing enriched uranic material by verifying the use of a safe.by.design transfer frame prior to movement of the associated waste container containing enriched uranic material	The Solid Waste Collection Room is not completed. A Ventilated Storage Room is constructed in the UF_6 Handling Area for storage of contaminated material until the Solid Waste Collection Room is complete. Operations conducted in the Solid Waste Collection Room (other than storage) is not conducted. Therefore, this accident sequence has no consequences exceeding 10 CFR 70.61.	The Solid Waste Collection Room is not completed. A Ventilated Storage Room is constructed in the UF_6 Handling Area for storage of contaminated material until the Solid Waste Collection Room is complete. Operations conducted in the Solid Waste Collection Room (other than storage) is not conducted. Therefore, this accident sequence has no consequences exceeding 10 CFR 70.61.	Applicable

Table 4.1-1 (Table 3.7-2) Affected Accident Sequence Descriptions

Accident Sequence	Description and Applicable IROFS	Justification		
		Initial Plant Operations (IPO)	Production Phase 1a and 1b	Production Phase 2
SW1-2	This accident sequence is identical to sequence FR1.2, except it is located in the solid waste collection system. • (IROFS14b) Administratively restrict proximity of vessels in non.designed locations containing enriched uranic material by verifying the associated storage array condition is acceptable, prior to moving a waste container within 180 cm of the associated storage array	The Solid Waste Collection Room is not completed. A Ventilated Storage Room is constructed in the UF_6 Handling Area for storage of contaminated material until the Solid Waste Collection Room is complete. Operations conducted in the Solid Waste Collection Room (other than storage) is not conducted. Therefore, this accident sequence has no consequences exceeding 10 CFR 70.61.	The Solid Waste Collection Room is not completed. A Ventilated Storage Room is constructed in the UF_6 Handling Area for storage of contaminated material until the Solid Waste Collection Room is complete. Operations conducted in the Solid Waste Collection Room (other than storage) is not conducted. Therefore, this accident sequence has no consequences exceeding 10 CFR 70.61.	Applicable

Table 4.1-1 (Table 3.7-2) Affected Accident Sequence Descriptions

Accident Sequence	Description and Applicable IROFS	Justification		
		Initial Plant Operations (IPO)	Production Phase 1a and 1b	Production Phase 2
LW1-1	Accumulation of sufficient uranium mass in the degreaser water collection tank resulting in a criticality event. • (IROFS19a) Administratively limit the calculated tank uranic mass inventory using bookkeeping procedures to determine calculated tank uranic mass inventory prior to transfer • (IROFS19c) Administratively limit measured tank uranic mass inventory to ensure a subcritical mass by performing independent sampling and measurement independent of IROFS19d • (IROFS19d) Administratively limit measured tank uranic mass inventory to ensure a subcritical mass by performing independent sampling and measurement independent of IROFS19c	The Liquid Effluent Collection and Treatment System is not available. Liquid waste is collected, but is not processed. Therefore the U content cannot accumulate in the tank. This accident sequence is not applicable.	The Liquid Effluent Collection and Treatment System is not available. Liquid waste is collected, but is not processed. Therefore the U content cannot accumulate in the tank. This accident sequence is not applicable.	Applicable
LW1-2	This accident sequence is identical to sequence FR1.1, except it is located in the liquid effluent collection and treatment system. • (IROFS14a) Administratively restrict proximity of vessels in non-designed locations containing enriched uranic material by verifying the use of a safe-by-design transfer frame prior to movement of the associated waste container containing enriched uranic material	The Liquid Effluent Collection and Treatment System is not available. Liquid waste is collected, but is not processed. Therefore the U content cannot accumulate in the tank. This accident sequence is not applicable.	The Liquid Effluent Collection and Treatment System is not available. Liquid waste is collected, but is not processed. Therefore the U content cannot accumulate in the tank. This accident sequence is not applicable.	Applicable

Table 4.1-1 (Table 3.7-2) Affected Accident Sequence Descriptions

Accident Sequence	Description and Applicable IROFS	Justification		
		Initial Plant Operations (IPO)	Production Phase 1a and 1b	Production Phase 2
LW1-3	This accident sequence is identical to sequence FR1.2, except it is located in the liquid effluent collection and treatment system. • (IROFS14b) Administratively restrict proximity of vessels in non.designed locations containing enriched uranic material by verifying the associated storage array condition is acceptable, prior to moving a waste container within 180 cm of the associated storage array	The Liquid Effluent Collection and Treatment System is not available. Liquid waste is collected, but is not processed. Therefore the U content cannot accumulate in the tank. This accident sequence is not applicable.	The Liquid Effluent Collection and Treatment System is not available. Liquid waste is collected, but is not processed. Therefore the U content cannot accumulate in the tank. This accident sequence is not applicable.	Applicable
LW2-1	Accumulation of sufficient uranium mass in the spent citric acid tank to cause criticality. • (IROFS19a) Administratively limit the calculated tank uranic mass inventory using bookkeeping procedures to determine calculated tank uranic mass inventory prior to transfer • (IROFS19c) Administratively limit measured tank uranic mass inventory to ensure a subcritical mass by performing independent sampling and measurement independent of IROFS19d • (IROFS19d) Administratively limit measured tank uranic mass inventory to ensure a subcritical mass by performing independent sampling and measurement independent of IROFS19c	The Liquid Effluent Collection and Treatment System is not available. Liquid waste is collected, but is not processed. Therefore the U content cannot accumulate in the tank. This accident sequence is not applicable.	The Liquid Effluent Collection and Treatment System is not available. Liquid waste is collected, but is not processed. Therefore the U content cannot accumulate in the tank. This accident sequence is not applicable.	Applicable

Table 4.1-1 (Table 3.7-2) Affected Accident Sequence Descriptions

Accident Sequence	Description and Applicable IROFS	Justification		
		Initial Plant Operations (IPO)	Production Phase 1a and 1b	Production Phase 2
LW3-1	Accumulation of sufficient uranium mass in the miscellaneous effluent collection tank to cause criticality. • (IROFS19a) Administratively limit the calculated tank uranic mass inventory using bookkeeping procedures to determine calculated tank uranic mass inventory prior to transfer • (IROFS19c) Administratively limit measured tank uranic mass inventory to ensure a subcritical mass by performing independent sampling and measurement independent of IROFS19d • (IROFS19d) Administratively limit measured tank uranic mass inventory to ensure a subcritical mass by performing independent sampling and measurement independent of IROFS19c	The Liquid Effluent Collection and Treatment System is not available. Liquid waste is collected, but is not processed. Therefore the U content cannot accumulate in the tank. This accident sequence is not applicable.	The Liquid Effluent Collection and Treatment System is not available. Liquid waste is collected, but is not processed. Therefore the U content cannot accumulate in the tank. This accident sequence is not applicable.	Applicable
LW5-1	Accumulation of sufficient uranium mass in the precipitation treatment tank to cause criticality. • (IROFS19a) Administratively limit the calculated tank uranic mass inventory using bookkeeping procedures to determine calculated tank uranic mass inventory prior to transfer • (IROFS19c) Administratively limit measured tank uranic mass inventory to ensure a subcritical mass by performing independent sampling and measurement independent of IROFS19d • (IROFS19d) Administratively limit measured tank uranic mass inventory to ensure a subcritical mass by performing independent sampling and measurement independent of IROFS19c	The Liquid Effluent Collection and Treatment System is not available. Liquid waste is collected, but is not processed. Therefore the U content cannot accumulate in the tank. This accident sequence is not applicable.	The Liquid Effluent Collection and Treatment System is not available. Liquid waste iscollected, but is not processed. Therefore the U content cannot accumulate in the tank. This accident sequence is not applicable.	Applicable

Table 4.1-1 (Table 3.7-2) Affected Accident Sequence Descriptions

Accident Sequence	Description and Applicable IROFS	Justification		
		Initial Plant Operations (IPO)	Production Phase 1a and 1b	Production Phase 2
RD1-1	The initiating event is the placement of product 30B cylinders into a non-safe criticality interaction arrangement (i.e., a non-analyzed condition) resulting in a criticality event. • (IROFS45) Prior to moving a cylinder containing enriched uranium in the CRDB or the Blending and Liquid Sampling Area, verify that the stored cylinders containing enriched uranium in are in a horizontal, co-planar (i.e., non-stacked), condition and that no other cylinder containing enriched uranium is in movement in the associated area	Cylinders are stored in the Stations. There is no product cylinder movement (in addition, 48X cylinders are not used at LES).	Applicable	Applicable

Table 4.1-2 (Table 3.7-4) Affected External Events and Fire Accident Descriptions

Accident Sequence	Description and Applicable IROFS	Justification		
		Initial Plant Operations (IPO)	Production Phase 1a and 1b	Production Phase 2
EE-LP-CRDB BUNKER (T)	Flooding due to local intense precipitation of areas containing UF_6 process systems results in a UF_6 release from process systems excluding the SBMs. • (IROFS27c) Design feature of buildings containing UF_6 process systems for seismic, tornado, tornado missile, high wind, roof snow load, and roof ponding and site flooding due to local intense precipitation, to ensure UF_6 process systems integrity	The CRDB is not available, so there is no MAR in the building. Therefore, this accident sequence has no consequences exceeding 10 CFR 70.61.	The CRDB is not available, so there is no MAR in the building. Therefore, this accident sequence has no consequences exceeding 10 CFR 70.61.	Applicable
EE-LP-CRDB BUNKER (CR)	Flooding due to local intense precipitation of areas containing enriched uranic material results in a criticality event excluding the SBMs. • (IROFS27a) Design feature of buildings containing enriched uranic material for roof ponding and site flooding due to local intense precipitation, to ensure associated building area sub criticality • (IROFS27b) Design feature of buildings containing enriched uranic material for roof ponding and site flooding due to local intense precipitation, to ensure associated building area sub criticality	The CRDB is not available, so there is no MAR in the building. Therefore, this accident sequence has no consequences exceeding 10 CFR 70.61.	The CRDB is not available, so there is no MAR in the building. Therefore, this accident sequence has no consequences exceeding 10 CFR 70.61.	Applicable

Table 4.1-2 (Table 3.7-4) Affected External Events and Fire Accident Descriptions

Accident Sequence	Description and Applicable IROFS	Justification		
		Initial Plant Operations (IPO)	Production Phase 1a and 1b	Production Phase 2
EE-LP-SBM-CRDB SHELL	Flooding due to local intense precipitation of areas containing UF_6 process systems and potential UF_6 release from process systems. • (IROFS27e) design feature of buildings containing UF_6 process systems for seismic, tornado, high wind, roof snow load, and roof ponding and site flooding due to local intense precipitation, to ensure that a chemical release does not exceed the 10 CFR 70.61 performance requirements	The CRDB is not available, so there is no MAR in the building. Therefore, this accident sequence has no consequences exceeding 10 CFR 70.61. This Sequence is applicable to the SBM for all phases.	The CRDB is not available, so there is no MAR in the building. Therefore, this accident sequence has no consequences exceeding 10 CFR 70.61. This Sequence is applicable to the SBM for all phases.	Applicable
EE-SNOW-CRDB BUNKER	Excessive snow load on roofs containing UF_6 process system leading to roof failure and UF_6 release from process systems • (IROFS27c) Design feature of buildings for seismic, tornado, tornado missile, high wind, roof snow load, and for roof ponding and site flooding due to local intense precipitation, to ensure UF6 process systems integrity	The CRDB is not available, so there is no MAR in the building. Therefore, this accident sequence has no consequences exceeding 10 CFR 70.61.	The CRDB is not available, so there is no MAR in the building. Therefore, this accident sequence has no consequences exceeding 10 CFR 70.61.	Applicable

Table 4.1-2 (Table 3.7-4) Affected External Events and Fire Accident Descriptions

Accident Sequence	Description and Applicable IROFS	Justification		
		Initial Plant Operations (IPO)	Production Phase 1a and 1b	Production Phase 2
EE-SNOW-SBM-CRDB SHELL	Excessive snow load on roofs containing UF_6 process system leading to roof failure and UF_6 release from process systems • (IROFS27e) design feature of buildings containing UF_6 process systems for seismic, tornado, high wind, roof snow load, and roof ponding and site flooding due to local intense precipitation, to ensure that a chemical release does not exceed the 10 CFR 70.61 performance requirements	The CRDB is not available, so there is no MAR in the building. Therefore, this accident sequence has no consequences exceeding 10 CFR 70.61. This Sequence is applicable to the SBM for all phases.	The CRDB is not available, so there is no MAR in the building. Therefore, this accident sequence has no consequences exceeding 10 CFR 70.61. This Sequence is applicable to the SBM for all phases.	Applicable
EE-TORNADO, TORNADO MISSILE, & HIGH WIND-CRDB BUNKER	Excessive tornado, tornado missile and high wind loads leading to building failure at areas containing UF_6 process systems and potential UF_6 release from process systems. This excludes the SBMs. • (IROFS27c) Design feature of buildings for seismic, tornado, tornado missile, high wind, roof snow load, and for roof ponding and site flooding due to local intense precipitation, to ensure UF6 process systems integrity	The CRDB is not available, so there is no MAR in the building. Therefore, this accident sequence has no consequences exceeding 10 CFR 70.61.	The CRDB is not available, so there is no MAR in the building. Therefore, this accident sequence has no consequences exceeding 10 CFR 70.61.	Applicable

Table 4.1-2 (Table 3.7-4) Affected External Events and Fire Accident Descriptions

Accident Sequence	Description and Applicable IROFS	Justification		
		Initial Plant Operations (IPO)	Production Phase 1a and 1b	Production Phase 2
EE-TORNADO & HIGH WIND-SBM-CRDB SHELL	Excessive tornado and high wind loads leading to building failure at areas containing UF_6 process systems and potential UF_6 release from process systems. • (IROFS27e) design feature of buildings containing UF_6 process systems for seismic, tornado, high wind, roof snow load, and roof ponding and site flooding due to local intense precipitation, to ensure that a chemical release does not exceed the 10 CFR 70.61 performance requirements	The CRDB is not available, so there is no MAR in the building. Therefore, this accident sequence has no consequences exceeding 10 CFR 70.61. This Sequence is applicable to the SBM for all phases.	The CRDB is not available, so there is no MAR in the building. Therefore, this accident sequence has no consequences exceeding 10 CFR 70.61. This Sequence is applicable to the SBM for all phases.	Applicable
EE-TORNADO MISSILE -SBM-CRDB SHELL & BUNKER WORKER	Excessive tornado and high wind loads leading to building failure at areas containing UF_6 process systems and potential UF_6 release from process systems. • (IROFS39d) preemptive worker evacuation for tornados.	The CRDB is not available, so there is no MAR in the building. Therefore, this accident sequence has no consequences exceeding 10 CFR 70.61. This Sequence is applicable to the SBM for all phases.	The CRDB is not available, so there is no MAR in the building. Therefore, this accident sequence has no consequences exceeding 10 CFR 70.61. This Sequence is applicable to the SBM for all phases.	Applicable
EE-TORNADO MISSILE – SBM-PUBLIC	Excessive tornado missile loads leading to failure and impacts on UF_6 process systems leading to UF_6 release. ▪ (IROFS28) provides protection of the autoclaves against the tornado missile loads and containment of uranic material within the autoclaves (i.e. no release from the cylinders in the autoclaves)	Product Liquid Sampling System (autoclave) is not available.	Product Liquid Sampling System (autoclave) is not available.	Applicable

Table 4.1-2 (Table 3.7-4) Affected External Events and Fire Accident Descriptions

Accident Sequence	Description and Applicable IROFS	Justification		
		Initial Plant Operations (IPO)	Production Phase 1a and 1b	Production Phase 2
EE-SEISMIC-CRDB SHELL	Excessive seismic motion imposed on CRDB supersturcture, beyond normal building code design could lead to building collapse, breaching of UF_6 cylinders, or damage to the Bunkered Area, and ultimately a UF_6 release. • (IROFS27e) design feature of buildings containing UF_6 process systems for seismic, tornado, high wind, roof snow load, and roof ponding and site flooding due to local intense precipitation, to ensure that a chemical release does not exceed the 10 CFR 70.61 performance requirements	The CRDB is not available, so there is no MAR in the building. Therefore, this accident sequence has no consequences exceeding 10 CFR 70.61.	The CRDB is not available, so there is no MAR in the building. Therefore, this accident sequence has no consequences exceeding 10 CFR 70.61.	Applicable
EE-SEISMIC-CRDB BUNKER	Excessive seismic motion imposed on CRDB Bunkered Area, beyond normal building code design could lead to building collapse, breaching of UF_6 cylinders, or other uranic material storate containers, damage to systems and interior IROFS, and ultimately a UF_6 release. • (IROFS27c) Design feature of buildings for seismic, tornado, tornado missile, high wind, roof snow load, and for roof ponding and site flooding due to local intense precipitation, to ensure UF6 process systems integrity	The CRDB is not available, so there is no MAR in the building. Therefore, this accident sequence has no consequences exceeding 10 CFR 70.61.	The CRDB is not available, so there is no MAR in the building. Therefore, this accident sequence has no consequences exceeding 10 CFR 70.61.	Applicable

Table 4.1-2 (Table 3.7-4) Affected External Events and Fire Accident Descriptions

Accident Sequence	Description and Applicable IROFS	Justification		
		Initial Plant Operations (IPO)	Production Phase 1a and 1b	Production Phase 2
EE-SEISMIC-SBM IROFS28 only	A seismic event leads to building failure and impacts on centrifuges, piping, and autoclaves leading to UF_6 release. ▪ (IROFS28) provides protection of the autoclaves against the tornado missile loads and containment of uranic material within the autoclaves (i.e. no release from the cylinders in the autoclaves)	This Accident Sequence is applicable to the SBM for all phases. Regarding IROFS28: The autoclave is not available; therefore, there is no hazard due to the autoclave so IROFS28 is not required. IROFS27e and IROFS41 are required to ensure no consequences exceeding 10 CFR 70.61.	This Accident Sequence is applicable to the SBM for all phases. Regarding IROFS28: The autoclave is not available; therefore, there is no hazard due to the autoclave so IROFS28 is not required. IROFS27e and IROFS41 are required to ensure no consequences exceeding 10 CFR 70.61.	Applicable
FF6-1	Fire in the general CRDB Area • (IROFS35) Automatic closure of fire-rated barrier opening protectives (e.g., doors, dampers, penetration seals) to ensure the integrity of area fire barriers prevents fires from propagating into areas containing uranic material. Barriers and protectives will be closed or self-closing (e.g. utilizing fusible links). ▪ (IROFS36a) Administratively limit transient combustible loading in area of concern and adjacent areas to ensure integrity of uranic material components/containers and limit the quantity of uranic material at risk to ensure consequences to the public are low.	The CRDB is not available, so there is no MAR in the building. Therefore, this accident sequence has no consequences exceeding 10 CFR 70.61.	The CRDB is not available, so there is no MAR in the building. Therefore, this accident sequence has no consequences exceeding 10 CFR 70.61.	Applicable

Table 4.1-2 (Table 3.7-4) Affected External Events and Fire Accident Descriptions

Accident Sequence	Description and Applicable IROFS	Justification		
		Initial Plant Operations (IPO)	Production Phase 1a and 1b	Production Phase 2
FF6-2	Fire involving excessive transient combustibles within the area resulting in a release of UF_6. • (IROFS36a) Administratively limit transient combustible loading in area containing uranic material and adjacent areas to ensure integrity of uranic material components/containers and limit the quantity of uranic material at risk to ensure consequences to the public are low.	The CRDB is not available, so there is no MAR in the building. Therefore, this accident sequence has no consequences exceeding 10 CFR 70.61.	The CRDB is not available, so there is no MAR in the building. Therefore, this accident sequence has no consequences exceeding 10 CFR 70.61.	Applicable
FF24-1	Fire propogating into the area resulting in a release of UF_6. • (IROFS35) Automatic closure of fire-rated barrier opening protectives (e.g., doors, dampers, penetration seals) to ensure the integrity of area fire barriers prevents fires from propagating into areas containing uranic material. Barriers and protectives will be closed or self-closing (e.g. utilizing fusible links). ▪ (IROFS36a) Administratively limit transient combustible loading in area of concern and adjacent areas to ensure integrity of uranic material components/containers and limit the quantity of uranic material at risk to ensure consequences to the public are low.	The ventilated room is not completed. A Ventilated Storage Room is constructed in the UF_6 Handling Area for storage of contaminated material until the Ventilated Room is complete. Operations conducted in the ventilated room (other than storage) is not conducted in the Ventilated Storage Room. Therefore, this accident sequence has no consequences exceeding 10 CFR 70.61.	Applicable	Applicable

Table 4.1-2 (Table 3.7-4) Affected External Events and Fire Accident Descriptions

Accident Sequence	Description and Applicable IROFS	Justification		
		Initial Plant Operations (IPO)	Production Phase 1a and 1b	Production Phase 2
FF25-1	Fire involving excessive transient combustibles within the area that could result in a release of the uranium inventory • (IROFS36d) Administratively limit transient combustible loading in areas containing uranic material and adjacent areas to ensure integrity of uranic material components/containers and limit the quantity of uranic material at risk	The ventilated room is not completed. A Ventilated Storage Room is constructed in the UF_6 Handling Area for storage of contaminated material until the Ventilated Room is complete. Operations conducted in the ventilated room (other than storage) is not conducted in the Ventilated Storage Room. Therefore, this accident sequence has no consequences exceeding 10 CFR 70.61.	The ventilated room is not completed. A Ventilated Storage Room is constructed in the UF_6 Handling Area for storage of contaminated material until the Ventilated Room is complete. Operations conducted in the ventilated room (other than storage) is not conducted in the Ventilated Storage Room. Therefore, this accident sequence has no consequences exceeding 10 CFR 70.61.	Applicable

Table 4.1-2 (Table 3.7-4) Affected External Events and Fire Accident Descriptions

Accident Sequence	Description and Applicable IROFS	Justification		
		Initial Plant Operations (IPO)	Production Phase 1a and 1b	Production Phase 2
FF25-2	Fire involving excessive transient combustibles within the area resulting in a release of UF_6. • (IROFS36d) Administratively limit transient combustible loading in areas containing uranic material and adjacent areas to ensure integrity of uranic material components/containers and limit the quantity of uranic material at risk	The ventilated room is not completed. A Ventilated Storage Room is constructed in the UF_6 Handling Area for storage of contaminated material until the Ventilated Room is complete. Operations conducted in the ventilated room (other than storage) is not conducted in the Ventilated Storage Room. Therefore, this accident sequence has no consequences exceeding 10 CFR 70.61.	The ventilated room is not completed. A Ventilated Storage Room is constructed in the UF_6 Handling Area for storage of contaminated material until the Ventilated Room is complete. Operations conducted in the ventilated room (other than storage) is not conducted in the Ventilated Storage Room. Therefore, this accident sequence has no consequences exceeding 10 CFR 70.61.	Applicable

4.1.2 IROFS

Table 4-3 identifies IROFS and the affected Accident Sequence that are not applicable for each Phased Operation sequence. A description of the IROFS and justification for it not being applicable is provided in the specific Phased Operation sequence column:

Table 4.1-3 (Table 3.8-1) Affected IROFS

IROFS	Affected Accident Sequence	Description	Justification		
			Initial Plant Operations (IPO)	Production Phase 1a and 1b	Production Phase 2
IROFS1	PB2-1	Automatic trip of defrost heater and fan on high air return temperature to ensure cylinder integrity (Product Blending)	Product Blending and Sampling System not available.	Product Blending and Sampling System not available in Production Phase 1a.	Applicable
IROFS2	PB2-1	Automatic trip of defrost heater and fan on high station internal air temperature to ensure cylinder integrity (Product Blending)	Product Blending and Sampling System not available.	Product Blending and Sampling System not available in Production Phase 1a.	Applicable
IROFS3	PB3-3 VR1-1 VR1-5	Automatic trip of the vacuum pump on carbon trap high weight (Blending and Sampling Vent Subsystem, Ventilated Room Cylinder Pressure Test & Pump Out Rig)	Product Blending and Sampling System not available. Ventilated Room not available.	Product Blending and Sampling System not available in Production Phase 1a. Ventilated Room not available.	Applicable
IROFS4	PB1-1	Automatic trip of station heaters on high station internal air temperature to ensure cylinder integrity (independent and diverse from IROFS5)	Product Blending and Sampling System not available.	Product Blending and Sampling System not available in Production Phase 1a.	Applicable
IROFS5	PB1-1	Automatic trip of station heaters on high station internal air temperature to ensure cylinder integrity (independent and diverse from IROFS4)	Product Blending and Sampling System not available.	Product Blending and Sampling System not available in Production Phase 1a.	Applicable

Table 4.1-3 (Table 3.8-1) Affected IROFS

IROFS	Affected Accident Sequence	Description	Justification		
			Initial Plant Operations (IPO)	Production Phase 1a and 1b	Production Phase 2
IROFS10	PB4-1 PB4-3 PB4-4	Design feature to maintain Product Liquid Sampling Autoclave leak tight integrity	Product Liquid Sampling System is not available.	Product Liquid Sampling System is not available in Production Phase 1a.	Applicable
IROFS11	PB4-2	Automatic trip of the autoclave heater and fan on autoclave high internal air temperature	Product Liquid Sampling System is not available.	Product Liquid Sampling System is not available in Production Phase 1a.	Applicable
IROFS12	PB4-2	Automatic trip of the autoclave heater and fan on autoclave high internal air pressure	Product Liquid Sampling System is not available.	Product Liquid Sampling System is not available in Production Phase 1a.	Applicable
IROFS14a	FR1-1 FR2-1 DS1-1 DS2-1 DS3-1 SW1-1 LW1-2	Administratively restrict proximity of vessels in non-designed locations containing enriched uranic material by verifying the use of a safe-by-design transfer frame prior to movement of the associated waste container containing enriched uranic material. (IROFS14a is applicable to new accident sequence TVR1-2, See Tables 4-4 and 4-5 below.)	PFPE Oil Recovery System is not available. Decontamination Workshop is not available. Solid Waste Collection Room is not available. Liquid Effluent Collection and Treatment System is not available.	PFPE Oil Recovery System is not available. Decontamination Workshop is not available. Solid Waste Collection Room is not available. Liquid Effluent Collection and Treatment System is not available.	Applicable

Table 4.1-3 (Table 3.8-1) Affected IROFS

IROFS	Affected Accident Sequence	Description	Justification		
			Initial Plant Operations (IPO)	Production Phase 1a and 1b	Production Phase 2
IROFS14b	FR1-2 FR2-2 DS1-2 DS2-2 DS3-2 SW1-2 LW1-3	Administratively restrict proximity of vessels in non-designed locations containing enriched uranic material by verifying, prior to moving a waste container enriched uranium materials within 180 cm of the associated storage array. (IROFS14b is applicable to new accident sequence TVR1-3, See Tables 4-4 and 4-5 below.)	PFPE Oil Recovery System is not available. Decontamination Workshop is not available. Solid Waste Collection Room is not available. Liquid Effluent Collection and Treatment System is not available.	PFPE Oil Recovery System is not available. Decontamination Workshop is not available. Solid Waste Collection Room is not available. Liquid Effluent Collection and Treatment System is not available.	Applicable
IRFOS15	PT3-5	Administratively restrict an independent parameter of the criticality sequence to ensure subcritical configuration by preventing additional transfer of enriched uranic material to another container if that container contains enriched uranic material and is a non-safe-by-design container.	PT3-5 is specific to washing flex hoses, emptying carbon traps, draining oil from product pumps, and scraping breakdown materials from product pump internals. None of these decontamination activities will be conducted during IPO.	PT3-5 is specific to washing flex hoses, emptying carbon traps, draining oil from product pumps, and scraping breakdown materials from product pump internals. None of these decontamination activities will be conducted during Production Phase 1.	Applicable

Table 4.1-3 (Table 3.8-1) Affected IROFS

IROFS	Affected Accident Sequence	Description	Justification		
			Initial Plant Operations (IPO)	Production Phase 1a and 1b	Production Phase 2
IROFS16a	PB2-2	Administratively limit moderator mass (oil and water) in cylinders containing enriched uranic material by limiting cylinder vapor pressure prior to introducing product	Product Blending and Sampling System not available.	Product Blending and Sampling System not available in Production Phase 1a.	Applicable
IROFS19a	DS1-3 DS2-3 LW1-1 LW2-1 LW3-1 LW5-1	Administratively limit the calculated tank uranic mass inventory using bookkeeping procedures to determine calculated tank uranic mass inventory prior to transfer	Decontamination Workshop is not available. Liquid Effluent Collection and Treatment System is not available.	Decontamination Workshop is not available. Liquid Effluent Collection and Treatment System is not available.	Applicable
IROFS19c	DS1-3 DS2-3 LW1-1 LW2-1 LW3-1 LW5-1	Administratively limit measured tank uranic mass inventory to ensure a subcritical mass by performing independent sampling and measurement independent of IROFS19d	Decontamination Workshop is not available. Liquid Effluent Collection and Treatment System is not available.	Decontamination Workshop is not available. Liquid Effluent Collection and Treatment System is not available.	Applicable

Table 4.1-3 (Table 3.8-1) Affected IROFS

IROFS	Affected Accident Sequence	Description	Justification		
			Initial Plant Operations (IPO)	Production Phase 1a and 1b	*Production Phase 2*
IROFS19d	DS1-3 DS2-3 LW1-1 LW2-1 LW3-1 LW5-1	Administratively limit measured tank uranic mass inventory to ensure a subcritical mass by performing independent sampling and measurement independent of IROFS19c	Decontamination Workshop is not available. Liquid Effluent Collection and Treatment System is not available.	Decontamination Workshop is not available. Liquid Effluent Collection and Treatment System is not available.	Applicable
IROFS20	CL3-1	Automatic isolation of cold trap on cold trap high temperature	Sub-Sampling System is not available.	Sub-Sampling System is not available.	Applicable
IROFS21	VR1-1 VR1-2 CL3-1	Automatic trip of the CRDB GEVS on ^{235}U selective high-high gamma	Ventilated Room not available. Sub-Sampling System is not available.	Ventilated Room not available. Sub-Sampling System is not available.	Applicable
IROFS22	VR1-2	Automatic trip of the vacuum pump on carbon trap high temperature	Ventilated Room not available.	Ventilated Room not available.	Applicable
IROFS23a	VR1-3	Administrative use of personnel respiratory protection when performing positive pressure testing of a UF_6 cylinder after repair/replacement of a leaking cylinder component	Ventilated Room not available.	Ventilated Room not available.	Applicable

Table 4.1-3 (Table 3.8-1) Affected IROFS

IROFS	Affected Accident Sequence	Description	Justification		
			Initial Plant Operations (IPO)	Production Phase 1a and 1b	Production Phase 2
IROFS23b	VR2-1 VR2-2	Administrative use of personnel respiratory protection	Ventilated Room not available.	Ventilated Room not available.	Applicable
IROFS24a	VR2-2	Administrative establishment of airflow away from the worker	Ventilated Room not available.	Ventilated Room not available.	Applicable
IROFS24b	CL3-2 CL3-3	Administrative establishment of air flow away from the worker	Chemistry Lab (Sub-Sampling System) is not available.	Chemistry Lab (Sub-Sampling System) is not available.	Applicable
IROFS27a	EE-LP-CRDB BUNKER	Design feature of buildings containing enriched uranic material for roof ponding and site flooding due to local intense precipitation, to ensure associated building area sub criticality	CRDB is not available.	CRDB is not available.	Applicable
IROFS27b	EE-LP-CRDB BUNKER	Design feature of buildings containing enriched uranic material for roof ponding and site flooding due to local intense precipitation, to ensure associated building area sub criticality	CRDB is not available.	CRDB is not available.	Applicable
IROFS27c	EE-LP-CRDB BUNKER EE-SNOW-CRDB BUNKER EE-TORNADO, TORNADO MISSILE, & HIGH WIND-CRDB BUNKER EE-SEISMIC-CRDB BUNKER	Design feature of buildings containing UF_6 process systems for seismic, tornado, tornado missile, high wind, roof snow load, and roof ponding and site flooding due to local intense precipitation, to ensure UF_6 process systems integrity	CRDB is not available.	CRDB is not available.	Applicable

Table 4.1-3 (Table 3.8-1) Affected IROFS

IROFS	Affected Accident Sequence	Description	Justification		
			Initial Plant Operations (IPO)	Production Phase 1a and 1b	Production Phase 2
IROFS27e	EE-SNOW-SBM-CRDB SHELL EE-LP-SBM-CRDB SHELL EE-TORNADO & HIGH WIND-SBM-CRDB SHELL EE-SEISMIC-CRDB SHELL	Design feature of SBMs and CRDB superstructure (not inculding the Bunkered Area) for seismic, tornado, high wind, roof snow load, roof ponding and site flooding due to local intense precipitation, to ensure a chemical release does not exceed the 10 CFR 70.61 performance requirements.	CRDB is not available. This IROFS applies to the SBM for all phases.	CRDB is not available. This IROFS applies to the SBM for all phases.	Applicable
IROFS28	EE-SEISMIC-SBM EE-TORNADO-MISSILE-SBM-PUBLIC	Design feature to maintain Product Liquid Sampling Autoclave leak tight integrity. Note: IROFS28 is required to enable EE-SEISMIC-SBM to meet the performance requirements of 10 CFR 70.61. IROFS28 only protects the autoclaves. While the autoclaves are not installed and operable, then the hazard IROFS28 is preventing does not exist. The performance requirements of 10 CFR 70.61 continue to be met.	Product Liquid Sampling System is not available. Autoclaves is not available.	Product Liquid Sampling System is not available. Autoclaves is not available for Production Phase 1a.	Applicable
IROFS30a	PB2-6	Administratively limit hydrocarbon oil (moderator mass) to ensure moderation control assumptions are maintained by controlling the type of oil used in process vacuum pumps	Ventilated Room not available. Product Blending and Sampling System not available.	Ventilated Room not available. Product Blending and Sampling System not available in Production Phase 1a.	Applicable

Table 4.1-3 (Table 3.8-1) Affected IROFS

IROFS	Affected Accident Sequence	Description	Justification		
			Initial Plant Operations (IPO)	Production Phase 1a and 1b	Production Phase 2
IROFS30b	PB2-6	Administratively verify, through testing prior to addition of oil, that process vacuum pump oil is not hydrocarbon oil	Ventilated Room not available. Product Blending and Sampling System not available.	Ventilated Room not available. Product Blending and Sampling System not available in Production Phase 1a.	Applicable
IROFS30c	PB2-6	Administratively verify, through testing after addition of oil, that process vacuum pump oil is not hydrocarbon oil	Ventilated Room not available. Product Blending and Sampling System not available.	Ventilated Room not available. Product Blending and Sampling System not available in Production Phase 1a.	Applicable
IROFS31a	VR2-7	Administratively limit ^{235}U mass in non-safe-by-design solid waste containers to ensure subcriticality by performing independent sampling and assay analysis (independent of IROFS31b). (IROFS31a is applicable to transitional accident sequence TVR1-1, See Tables 4-4 and 4-5 below.)	This operation is not conducted as the ventilated room is not available.	This operation is not conducted as the ventilated room is not available.	Applicable

Table 4.1-3 (Table 3.8-1) Affected IROFS

IROFS	Affected Accident Sequence	Description	Justification		
			Initial Plant Operations (IPO)	Production Phase 1a and 1b	Production Phase 2
IROFS31b	VR2-7	Administratively limit ^{235}U mass in non-safe-by-design solid waste containers to ensure subcriticality by performing independent sampling and assay analysis (independent of IROFS31a). (IROFS31b is applicable to transitional accident sequence TVR1-1, See Tables 4-4 and 4-5 below.)	This operation is not conducted as the ventilated room is not available.	This operation is not conducted as the ventilated room is not available.	Applicable
IROFS31c	VR2-7	Administratively limit ^{235}U mass in non-safe-by-design solid waste containers to ensure subcriticality using bookkeeping procedures. (IROFS31c is applicable to transitional accident sequence TVR1-1, See Tables 4-4 and 4-5 below.)	This operation is not conducted as the ventilated room is not available.	This operation is not conducted as the ventilated room is not available.	Applicable
IROFS35	FF6-1 FF24-1	Fire barriers and automatic closure of fire-rated barriers opening protectives	CRDB not available Ventilated Room not available.	CRDB not available Ventilated Room not available.	Applicable
IROFS36a	FF6-1 FF6-2	Administratively limit transient combustible loading in areas containing uranic material and adjacent areas to ensure integrity of uranic material components/containers and limit the quantity of uranic material at risk to ensure consequences to the public are low.	CRDB not available	CRDB not available	Applicable

Table 4.1-3 (Table 3.8-1) Affected IROFS

IROFS	Affected Accident Sequence	Description	Justification		
			Initial Plant Operations (IPO)	Production Phase 1a and 1b	Production Phase 2
IROFS36d	FF24-1 FF25-1 FF25-2	Administratively limit transient combustible loading in areas containing uranic material and adjacent areas to ensure integrity of uranic material components/containers and limit the quantity of uranic material at risk to ensure consequences to the public are low.	Ventilated Room not available.	Ventilated Room not available.	Applicable
IROFS38	PB2-4	Administratively limit the cylinder fill mass by verifying cylinder weight is within specified trending limits once per shift during filling of the cylinder	Product Liquid Sampling System is not available.	Product Liquid Sampling System is not available in Production Phase 1a.	Applicable
IROFS39d	EE-TORNADO MISSILE – SBM – CRDB SHELL & BUNKER WORKER (T)	Administratively limit exposure by requiring worker action to evacuate area(s) of concern to ensure worker consequences of inhalation of uranic material and HF are low.	This IROFS is applicable to the SBM for all phases. CRDB not available	This IROFS is applicable to the SBM for all phases. CRDB not available	Applicable
IROFS42	PB4-4	Administratively limit the cylinder fill mass prior to placement and heating	Product Liquid Sampling System is not available.	Product Liquid Sampling System is not available in Production Phase 1a.	Applicable
IROFS43	CL3.3	Automatic trip of UF_6 sub.sampling unit hotbox heater or high hotbox internal temperature	Chemistry Lab (Sub-Sampling System) is not available.	Applicable	Applicable

Table 4.1-3 (Table 3.8-1) Affected IROFS

IROFS	Affected Accident Sequence	Description	Justification		
			Initial Plant Operations (IPO)	Production Phase 1a and 1b	Production Phase 2
IROFS45	PB1.3 RD1-1	Prior to moving a cylinder containing enriched uranium in the CRDB or the Blending and Liquid Sampling Area, verify that the stored cylinders containing enriched uranium in are in a horizontal, co.planar (i.e., non.stacked), condition and that no other cylinder containing enriched uranium is in movement in the associated area	The CRDB and Product Liquid Sampling System is not available.	The CRDB and Product Liquid Sampling System is not available in Production Phase 1a.	Applicable
IROFS46	CL3.2	Administrative verification that product samples are in a solid state, prior to transfer	Chemistry Lab (Sub-Sampling System) is not available.	Chemistry Lab (Sub-Sampling System) is not available.	Applicable
IROFS47a	PB3-3	Flow restriction to ensure, in the event of a postulated release, worker consequences of inhalation of uranic material and HF are low	Cylinders are stored in the Stations. There are no blending operations conducted.	Cylinders are stored in the Stations. There are no blending operations conducted in Production Phase 1a.	Applicable
IROFS47b	VR1-5	Flow restriction to ensure worker consequences of inhalation of uranic material and HF are low	Ventilated Room not available.	Applicable	Applicable
IROFSC21	MR3-1 MR3-2	Flow restriction to ensure in the event of a release that worker consequences of inhalation of uranic material and HF are low.	The Pressure Transducer Calibration Rig is limited to use in non UF_6 contamination systems during Initial Plant Operations	The Pressure Transducer Calibration Rig is limited to use in non UF_6 contamination systems during Production Phase 1	Applicable

4.1.3 Transitional Accident Sequence and Risk Index

Tables 4-4 and 4-5 identify accident sequences and the associated risk index for accident sequences identified as a result of temporary systems in place for Initial Plant Operations:

Table 4.1-4 Transitional Accident Sequence and Risk Index

Accident Identifier	Initiating Event Index	Preventive Safety Parameter 1 or IROFS 1 Failure Index	Preventive Safety Parameter 2 or IROFS 2 Failure Index	Mitigation IROFS Failure Index	Likelihood Index T Uncontrolled (U) / Controlled (C)	Likelihood Category	Conseq. Category (Type of Accident)	Risk Index (h=f x g) Uncontrolled (U) / Controlled (C)	Comments and Recommendations
	(a)	(b)	(c)	(d)	(e)	(f)	(g)	(h)	
TVR1-1	(IROFS31a) -1	N/A	N/A	N/A	-1 (U)	3	3 (CR)	9 (U)	IROFS Required
TVR1-1	(IROFS31a) -1	(IROFS31b) -2	(IROFS31c) -2	N/A	-5 (C)	1	3 (CR)	3 (C)	Acceptable Risk
TVR1-2	-2	N/A	N/A	N/A	-2 (U)	3	3 (CR)	9 (U)	IROFS Required
TVR1-2	-2	(IROFS14a) -3	N/A	N/A	-5 (C)	1	3 (CR)	3 (C)	Acceptable Risk
TVR1-3	-2	N/A	N/A	N/A	-2 (U)	3	3 (CR)	9 (U)	IROFS Required
TVR1-3	-2	(IROFS14b) -3	N/A	N/A	-5 (C)	1	3 (CR)	3 (C)	Acceptable Risk

Table 4.1-5 Transitional Accident Sequence Descriptions

Accident Identifier: TVR1-1

The initiating event allows the accumulation of sufficient uranic mass to cause criticality in a contatiner. The initial condition isthe operator would transfer material containing enriched uranic material to a non-safe-by design containers and fails to control the uranic matter in the container, (i.e., failure of IROFS31a: administratively linit ^{235}U mass in non-safe-by-design containers to ensure sub criticality by performing independent sampling and analysis).

For the uncontrolled accident sequence, sufficient uranium mass accumulates in the container through transfer of material containg enriched uranic material from any source. A criticality event is assumed to result for this accident sequence. A criticality event is assumed to result in a high consequence to the worker and public.

For the controlled accident sequence, the preventive measures are: (1) administratively limit ^{235}U mass in non-safe-by-design containers to ensure a subcritical mass (IROFS31b, i.e., by independent sample and assay analysis to determine ^{235}U mass prior to tranferring and bulk storing enriched uranic material in containers) and (2) administratively limit the calculated ^{235}U mass waste storage to ensure a subcritical mass (IROFS31c, i.e., using bookkeeping procedures to determine the ^{235}U mass prior to transferring and bulk storing enriched uranic material in containers). For each preventive measure, if the acceptance criterion is not met, the transfer of enriched uranic material shall not be initiated.

The frequency index number for the initiating event (IROFS31a) was determined to be (-1). This frequency probability index corresponds to a failure of redundant IROFS per NUREG-1520.

A failure probability index of (-2) was selected for IROFS31b. This corresponds to an administrative IROFS for planned routine operation per NUREG-1520.

A failure probability index of (-2) was selected for IROFS31c. This corresponds to an administrative IROFS for planned routine operation per NUREG-1520.

Table 4.1-5 Transitional Accident Sequence Descriptions

Accident Identifier: TVR1-2

The accident sequence is the combination of numerous conditions assumed to lead to a criticality in a container being transported. This description of this sequence is the following:

(1) The fissile material in the container and interacting components would be auranyl fluoride/water mixture at an H/U atomic ration near optimum moderation,

(2) The container, as well as other interacting components, would be nearly or completely filled with the above material at a high enough enrichment to achieve a configuration favorable for criticality (Urenco European experience is that less than 10% of container enrichment is at product enrichment levels), and

(3) The container would have to interact (i.e., proximity limit not maintained) with greater than one component containing fissile material, as interaction of the container and one other component is subcritical.

The movement of containers with uranic material is part of normal operations; the abnormal operating conition pertaining to the container concerns the assumption that the container and interacting component are filled with product UF_6 breakdown material at optimum moderation conditions. This would be extremely unlikely for a single container and even more unlikely for more than one component.

For the uncontrolled accident sequence, conditions (1) through (3) above must be met to result in a potential criticality event. Fore this accident sequence,a criticality event was assumed. A criticality even is assumed to result in a high consequence to the worker and public.

For the controlled accident sequence, the preventive measure is to administratively restrict proximity of vessels in non-designed locations containing enriched uranic material to ensure subcritical configuration bv verifying the use of a safe-bv-design transfer frame prior to movement of the associated container containing enriched uranic material (IROFS14a). If the acceptance criteria is not met, then the associated container containing enriched uranic material shall not be moved.

The frequency index number for the initiating event was determined to be (-2). The NUREG-1 520 criteria - no failures of this type in this facility in 30 vrs – applies. This failure frequency index was selected based on evidence from history of similarly designed Urenco European plants, which have a combined plant history of greater than 30 vrs, and have not had a failure of this type.

A failure probability index of (-3) was selected for IROFS14a. This corresponds to an enhanced administrative IROFS per NUREG-1520. IROFS14a is enhanced bv requiring independent verification of the IROFS safety function. The IROFS justification for enhanced administrative control is discussed in Section 3.8.3.

Table 4.1-5 Transitional Accident Sequence Descriptions

Accident Identifier: TVR1-3

The accident sequence is the combination of numerous conditions assumed to lead to a criticality in a container being stored. This description of this sequence is the following:

(1) The fissile material in the container and interacting components, would be a uranvl fluoride/water mixture at an HIU atomic ratio near optimum moderation,

(2) The container, as well as other interacting components, would be nearly or completely filled with the above material at a high enough enrichment to achieve a configuration favorable for criticality (Urenco European experience is that less than 10% of container enrichment is at product enrichment levels), and

(3) The container would have to interact (i.e., proximity limit not maintained) with greater than one component containing fissile material, as interaction of the container and one other component is subcritical.

For the uncontrolled accident sequence, conditions (1) through (3) above, above must be met to result in a potential criticality event. For this accident sequence, a criticality event was assumed. A criticality event is assumed to result in a high consequence to the worker and public.

For the controlled accident sequence, the preventive measure is administratively restrict proximity of vessels in non-designed locations containing enriched uranic material to ensure subcritical configuration by verifying, prior to moving a container containing enriched uranic material within 180 cm of the associated storage array, associated storage array condition is acceptable for storage of the container and no component containing enriched uranic material is in movement in the designated area (IROFS14b). If the acceptance criteria are not met, then the associated container shall not be moved.

The frequency index number for the initiating event was determined to be (-2). The NUREG-1 520 criteria - no failures of this type in this facility in 30 vrs - applies. This failure frequency index was selected based on evidence from history of similarly designed Urenco European plants, which have a combined plant history of greater than 30 vrs, and have not had a failure of this type.

A failure probability index of (-3) was selected for IROFS14b. This corresponds to an enhanced administrative IROFS per NUREG-1520. IROFS14b is enhanced bv requiring independent verification of the IROFS safetv function. The IROFS justification for enhanced administrative control is discussed in Section 3.8.3.

Table 4.1-5 Transitional Accident Sequence Descriptions

Accident Identifier: TVR1-2

The accident sequence is the combination of numerous conditions assumed to lead to a criticality in a container being transported. This description of this sequence is the following:

(1) The fissile material in the container and interacting components would be auranyl fluoride/water mixture at an H/U atomic ration near optimum moderation,

(2) The container, as well as other interacting components, would be nearly or completely filled with the above material at a high enough enrichment to achieve a configuration favorable for criticality (Urenco European experience is that less than 10% of container enrichment is at product enrichment levels), and

(3) The container would have to interact (i.e., proximity limit not maintained) with greater than one component containing fissile material, as interaction of the container and one other component is subcritical.

The movement of containers with uranic material is part of normal operations; the abnormal operating conition pertaining to the container concerns the assumption that the container and interacting component are filled with product UF6 breakdown material at optimum moderation conditions. This would be extremely unlikely for a single container and even more unlikely for more than one component.

For the uncontrolled accident sequence, conditions (1) through (3) above must be met to result in a potential criticality event. Fore this accident sequence,a criticality event was assumed. A criticality even is assumed to result in a high consequence to the worker and public.

For the controlled accident sequence, the preventive measure is to administratively restrict proximity of vessels in non-designed locations containing enriched uranic material to ensure subcritical configuration bv verifying the use of a safe-bv-design transfer frame prior to movement of the associated container containing enriched uranic material (IROFS14a). If the acceptance criteria is not met, then the associated container containing enriched uranic material shall not be moved.

The frequency index number for the initiating event was determined to be (-2). The NUREG-1 520 criteria - no failures of this type in this facility in 30 vrs – applies. This failure frequency index was selected based on evidence from history of similarly designed Urenco European plants, which have a combined plant history of greater than 30 vrs, and have not had a failure of this type.

A failure probability index of (-3) was selected for IROFS14a. This corresponds to an enhanced administrative IROFS per NUREG-1520. IROFS14a is enhanced bv requiring independent verification of the IROFS safety function. The IROFS justification for enhanced administrative control is discussed in Section 3.8.3.

Table 4.1-5 Transitional Accident Sequence Descriptions

Accident Identifier: TVR1 -3

The accident sequence is the combination of numerous conditions assumed to lead to a criticality in a container being stored. This description of this sequence is the following:

(1). The fissile material in the container and interacting components, would be a uranvl fluoride/water mixture at an HIU atomic ratio near optimum moderation,

(2). The container, as well as other interacting components, would be nearly or completely filled with the above material at a high enough enrichment to achieve a configuration favorable for criticality (Urenco European experience is that less than 10% of container enrichment is at product enrichment levels), and

(3). The container would have to interact (i.e., proximity limit not maintained) with greater than one component containing fissile material, as interaction of the container and one other component is subcritical.

For the uncontrolled accident sequence, conditions (1) through (3) above, above must be met to result in a potential criticality event. For this accident sequence, a criticality event was assumed. A criticality event is assumed to result in a high consequence to the worker and public.

For the controlled accident sequence, the preventive measure is administratively restrict proximity of vessels in non-designed locations containing enriched uranic material to ensure subcritical configuration by verifying, prior to moving a container containing enriched uranic material within 180 cm of the associated storage array, associated storage array condition is acceptable for storage of the container and no component containing enriched uranic material is in movement in the designated area (IROFS14b). If the acceptance criteria are not met, then the associated container shall not be moved.

The frequency index number for the initiating event was determined to be (-2). The NUREG-1 520 criteria - no failures of this type in this facility in 30 vrs - applies. This failure frequency index was selected based on evidence from history of similarly designed Urenco European plants, which have a combined plant history of greater than 30 vrs, and have not had a failure of this type.

A failure probability index of (-3) was selected for IROFS14b. This corresponds to an enhanced administrative IROFS per NUREG-1520. IROFS14b is enhanced bv requiring independent verification of the IROFS safetv function. The IROFS justification for enhanced administrative control is discussed in Section 3.8.3.