LBB Methodology for Weld Overlay of Alloy 82/182 DMW per RIS 2010-07

NRC Public Meeting
October 28, 2010

Ashok Nana - AREVA NP INC

AREVA

Outline of Presentation

- LBB Weld Overlay Methodology
- Typical Weld Overlaid Nozzle
- Critical Through-wall Flaw Size
- Leak Rate Prediction
- Summary and Conclusions
- AREVA's Position on RIS 2010-07

AREVA

LBB Methodology

- Determine Critical Flaw Size
- Determine Leakage Flaw Size
- Evaluate Safety Margins
  - 10 on Leakage Detection Capability
  - 2 on Critical Flaw Size

- Challenge for Overlaid Structure
  - Several Material Strengths
  - Several Material Fracture Resistance Curves
  - Several Diameters and Thicknesses

AREVA

Typical Overlay Description

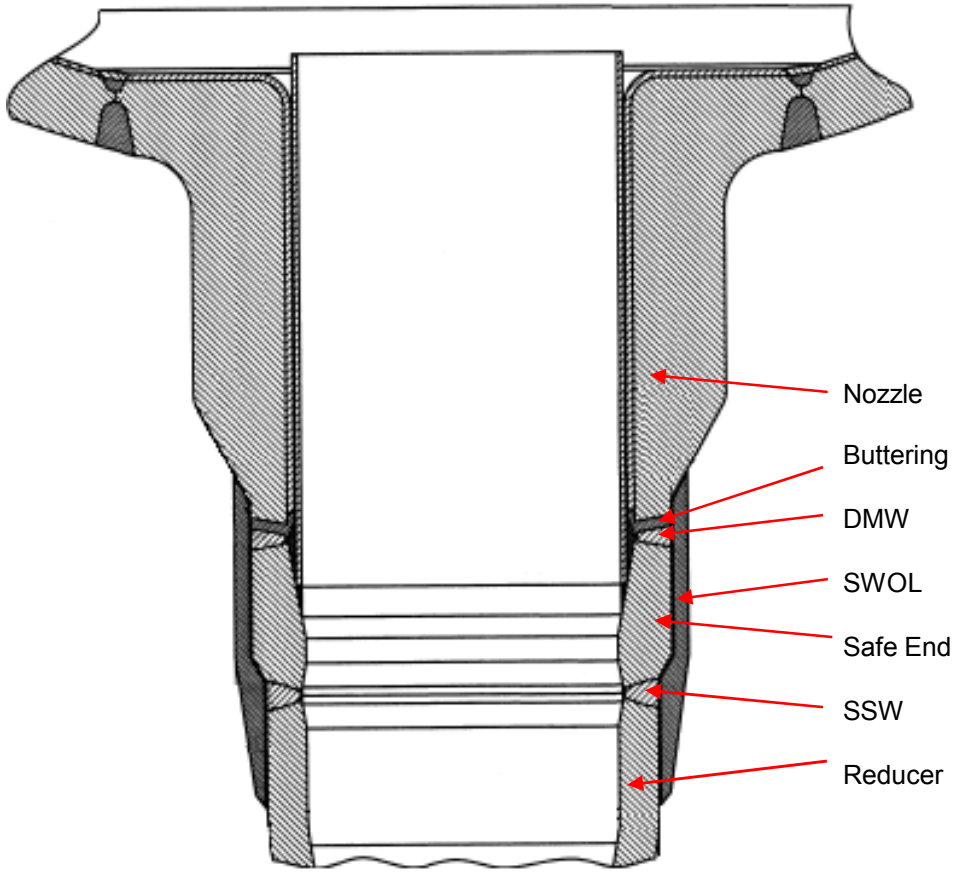

AREVA

Critical Flaw Size – Composite Materials

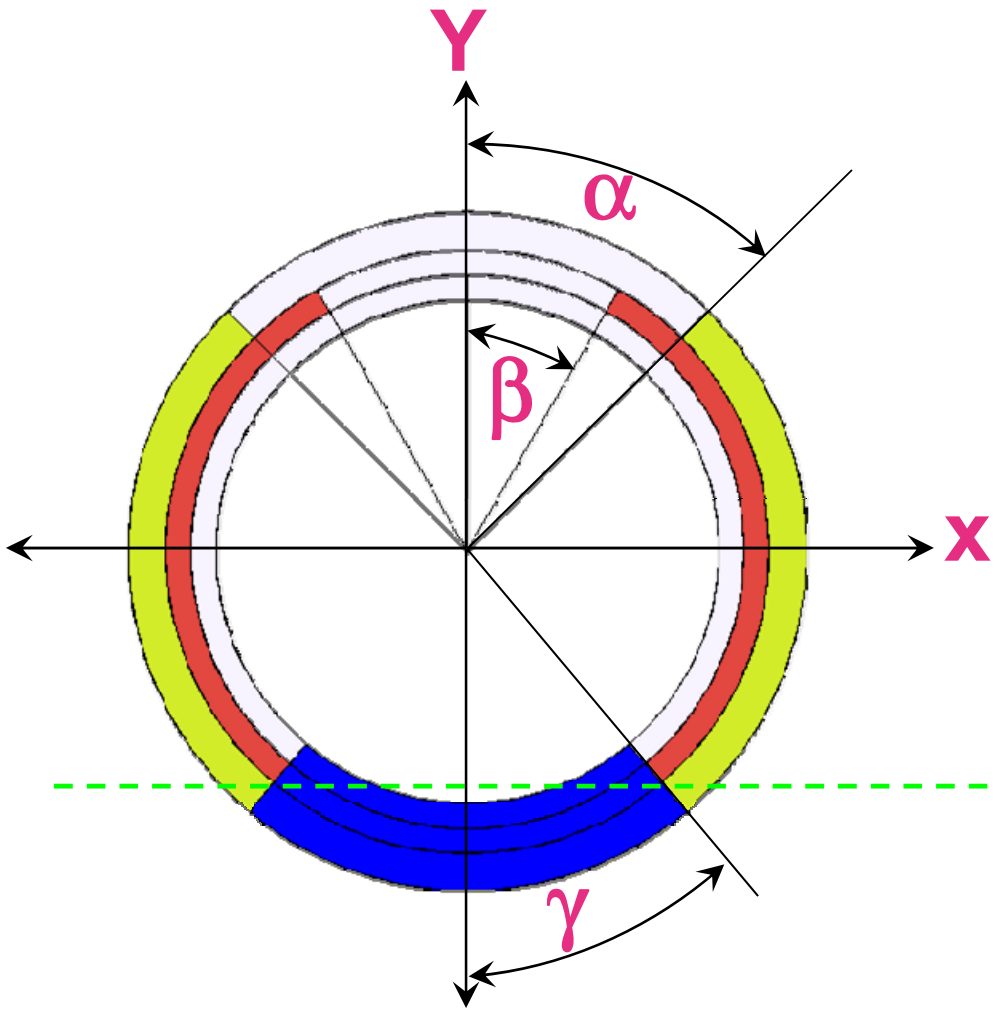

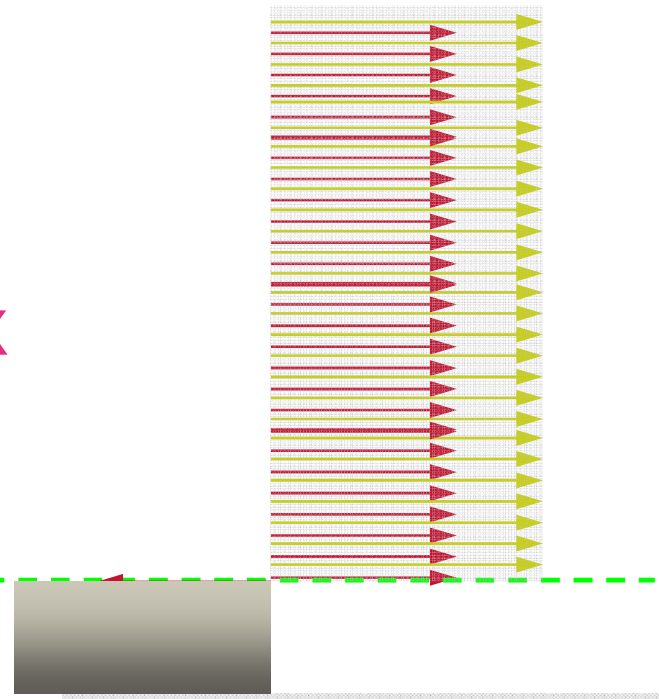

Overlay σ_f

Original Material σ_f

Overlaid Material

Original Material

Areas under Compression

AREVA

Critical Flaw Size

- **Equilibrium of Linear Forces Determines the Neutral Axis Angle for Circumferentially Cracked Pipe**

$$F_{Ext} = F_{Overlay} + F_{Original}$$

$$F_{Original} = 2\sigma_{f,original} r_{m,original} t_{original} (\pi - \gamma - \beta) - 2\gamma\sigma_{f,original} \hat{r}_{m,original} \hat{t}_{original}$$

$$F_{Overlay} = 2\sigma_{f,overlay} r_{m,overlay} t_{overlay} (\pi - 2\gamma - \alpha)$$

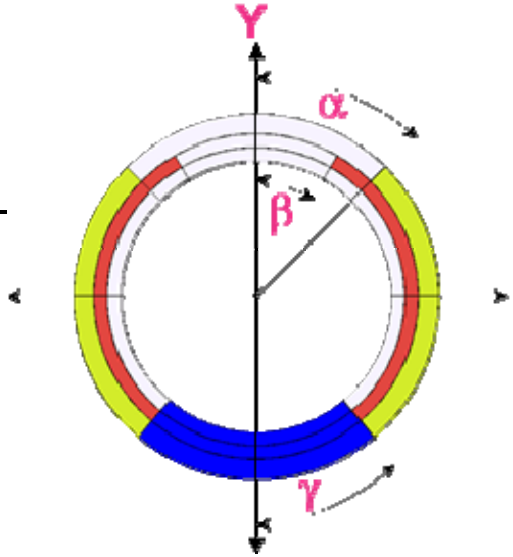

- **Neutral Axis Angle**

$$\gamma = \frac{2\sigma_{f,overlay} r_{m,overlay} t_{overlay} (\pi - \alpha) + 2\sigma_{f,original} (\pi - \beta) r_{m,original} t_{original} - F_{Ext}}{4\sigma_{f,overlay} r_{m,overlay} t_{overlay} + 2\sigma_{f,original} r_{m,original} t_{original} + 2\sigma_{f,original} \hat{r}_{m,original} \hat{t}_{original}}$$

AREVA

Critical Flaw Size

- **Plastic Collapse Moment, M**

$$M = 2\int_{\alpha}^{\pi-\gamma} \sigma_{f,overlay} r_{m,overlay}^2 t_{overlay} \cos\theta d\theta + 2\int_0^{\gamma} \sigma_{f,overlay} r_{m,overlay}^2 t_{overlay} \cos\theta d\theta$$
$$+ 2\int_{\beta}^{\pi-\gamma} \sigma_{f,original} r_{m,original}^2 t_{original} \cos\theta d\theta + 2\int_0^{\gamma} \sigma_{f,original} \hat{r}_{m,original}^2 \hat{t}_{original} \cos\theta d\theta$$

$$M = 2\sigma_{f,overlay} r_{m,overlay}^2 t_{overlay} (2\sin\gamma - \sin\alpha) + 2\sigma_{f,original} r_{m,original}^2 t_{original} (\sin\gamma - \sin\beta)$$
$$+ 2\sigma_{f,original} \hat{r}_{m,original}^2 \hat{t}_{original} \sin\gamma$$

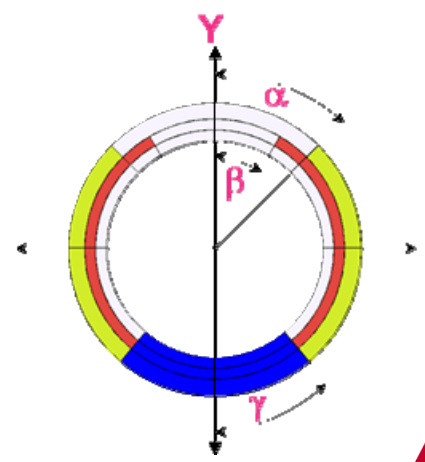

- **Allowable Bending Stress, $P_B^{Allowable}$**

$$P_b^{Allowable} = \frac{M}{\pi r_m^2 t}$$

AREVA

Critical Flaw Size

- **Applied Bending stress - High Toughness Material**
  - **Alloy 52M**

$$P_b^{Applied} = SF(P_m + P_b) - P_m$$

- **Applied Bending Stress - Low Toughness Material Such**
  - **Ferritic Steel and Alloy 82/182 DMW**

$$P_b^{Applied} = Z(SF)(P_m + P_b + \frac{P_e}{SF}) - P_m$$

AREVA

Critical Flaw Size

- **Composite Material – Plastic Net Section Collapse**

$$P_b^{Allowable} = (1 - M^*)\left[SF(P_m + P_b) - P_m\right] + M^*\left[Z(SF)(P_m + P_b + \frac{P_e}{SF}) - P_m\right]$$

- **For α=β**

$$M^* = \frac{\sigma_{f,original} r_{m,original}^2 t_{original}}{\sigma_{f,original} r_{m,original}^2 t_{original} + \sigma_{f,overlay} r_{m,overlay}^2 t_{overlay}}$$

AREVA

Critical Flaw Size

- **Composite Material**

$$\frac{M}{\pi r_m^2 t} = (1 - M^*)\left[SF(P_m + P_b) - P_m\right] +$$

$$M^*\left[Z(SF)(P_m + P_b + \frac{P_e}{SF}) - P_m\right]$$

  - **M is the Collapse Moment which is a Function of Flaw Size, Pipe Geometry and Flow Strength**

- **Solve above Equations for Plastic Collapse Moment and Allowable Bending Stress to Determine Critical Flaw Size**

A.F. Deardorff, N.G. Cofie, D.G. Dijamco and A. Chintapalli, "Net Section Plastic Collapse Analysis of Two-Layered Materials and Application to Weld Overlay Design," 2006 ASME PVP Conference

AREVA

Example – Z-Factors

- **Nozzle, CS** $$Z = 1.20\left\{1 + 0.021\left(0.125R/t - 0.25\right)^{0.25}(NPS - 4)\right\}$$

- **DM Weld** $$Z = \begin{cases} 0.0000022D^3 - 0.0002D^2 + 0.0064D + 1.1355, & D \geq 8" \\ 0.00065D^3 - 0.01386D^2 + 0.1034D + 0.902, & D < 8" \end{cases}$$

- **SSW** $$Z = 1.15\left[1 + 0.013(D - 4)\right]$$

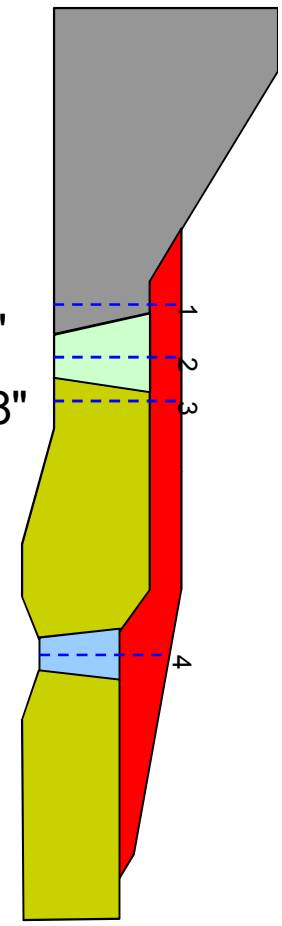

Nozzle, CS	Overlay, Alloy 52M	Nozzle-Safe End Weld (DMW)	Safe End, SS	SSW
1.402	1.000	1.194	1.000	1.300

AREVA

Leak Rate Calculations for Overlaid Structures

- **Crack Opening Area**
  - **Methodology of COA Calculation Presented in NUREG/CR-3464**
- **Crack Opening Displacement**
  - **Paris-Tada Method**
- **Effective Crack Morphology Parameters**
  - **Fatigue Crack Morphology in Austenitic and Ferritic Material and Alloy 52M**
  - **PWSCC Crack Morphology in 82/182 DM Weld**

AREVA

Leak Rate Calculations for Overlaid Structures

- **Crack Opening Area - NUREG/CR-3464 – Tension & Bending**

$$A_{total} \cong \frac{\sigma_b}{E}(\pi R^2) I_t(\theta)\left[\frac{\sigma_t}{\sigma_b} + \left(\frac{3+\cos\theta}{4}\right)\right]$$

$$I_t(\theta) = 2\theta^2 \left\{ \begin{array}{l} 1 + \left(\frac{\theta}{\pi}\right)^{1.5}\left[8.6 - 13.3\left(\frac{\theta}{\pi}\right) + 24\left(\frac{\theta}{\pi}\right)^2\right] \\ + \left(\frac{\theta}{\pi}\right)^3\left[22.5 - 75\left(\frac{\theta}{\pi}\right) + 205.7\left(\frac{\theta}{\pi}\right)^2 - 247.5\left(\frac{\theta}{\pi}\right)^3 + 242\left(\frac{\theta}{\pi}\right)^4\right] \end{array} \right\}, \quad (0 < \theta < 100^\circ)$$

- **Use Plastic Zone Corrections - Replace θ by θ_{eff}**

$$\theta_{eff} = \theta + \frac{K_{total}^2}{2\pi R \sigma_Y{}^2}$$

- **Use Paris-Tada Equation to Determine K**

AREVA

Effective Crack Morphology Parameters

- **Determine COD** $$\delta = \frac{A_{total}}{2R\theta_{eff}}.$$
- **COA and COD Depend on E and σ_y**
- **Determine Effective Properties Using Weighted Average**

$$\sigma_Y = \frac{\sigma_{Y,original} t_{original} + \sigma_{Y,overlay} t_{overlay}}{t_{original} + t_{overlay}}$$

$$E = \frac{E_{original} t_{original} + E_{overlay} t_{overlay}}{t_{original} + t_{overlay}}$$

AREVA

Leak Rate Calculations for Overlaid Structures

- **Improved COD Dependant Model in NUREG/CR-6004 and NUREG/CR-6300 Defines:**
  - **Surface Roughness, Effective Flow Path Length and Number of Turns as a Function of the Ratio of The Crack Opening Displacement (COD) to the Global Roughness of The Flow Path**
- **Surface Roughness, μ**

$$\mu = \begin{cases} \mu_L , & 0 < \dfrac{\delta}{\mu_G} < 0.1 \\ \mu_L + \dfrac{\mu_G - \mu_L}{9.9}\left(\dfrac{\delta}{\mu_G} - 0.1\right), & 0.1 \le \dfrac{\delta}{\mu_G} \le 10 \\ \mu_G , & \dfrac{\delta}{\mu_G} > 10 \end{cases}$$

AREVA

Leak Rate Calculations for Overlaid Structures

- **Number of Turns, n**

$$n = \begin{cases} n_L, & 0 < \dfrac{\delta}{\mu_G} < 0.1 \\ n_L - \dfrac{n_L}{11}\left(\dfrac{\delta}{\mu_G} - 0.1\right), & 0.1 \le \dfrac{\delta}{\mu_G} \le 10 \\ 0.1 n_L, & \dfrac{\delta}{\mu_G} > 10 \end{cases}$$

- **Correction Factor for Flow Path Deviation from Straightness**

$$\frac{L_a}{t} = \begin{cases} K_{G+L}, & 0 < \dfrac{\delta}{\mu_G} < 0.1 \\ K_{G+L} - \dfrac{K_{G+L} - K_G}{9.9}\left(\dfrac{\delta}{\mu_G} - 0.1\right), & 0.1 \le \dfrac{\delta}{\mu_G} \le 10 \\ K_G, & \dfrac{\delta}{\mu_G} > 10 \end{cases}$$

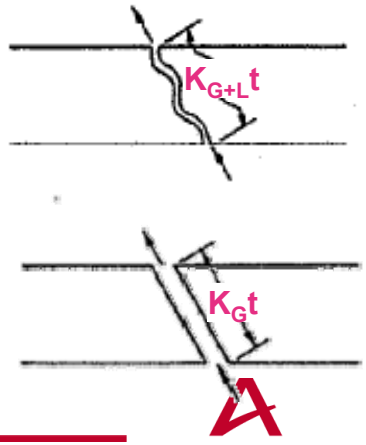

AREVA

Example – Crack Morphology

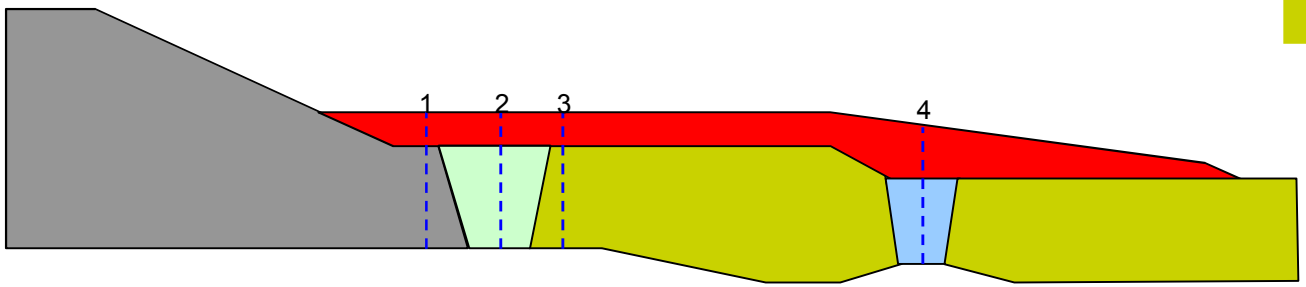

	Fatigue Stainless Steel	Fatigue Ferritic Steel	PWSCC Weld
Local roughness, μ_L, in.	0.000317	0.000257	0.000664
Global roughness, μ_G, in.	0.001325	0.001325	0.004484
Number of 90-degree turns, n_L, in^{-1}	64	51	151
Global path deviation, K_G	1.017	1.017	1.009
Local waviness, K_{G+L}	1.060	1.060	1.243

AREVA

Equivalent Crack Morphology Parameters for Overlaid Pipe

- **Pressure Loss Factor, C_f , due to Crack Face Roughness and Path Turns**

$$C_f = f\left(t / D_H + 26 N_{45}\right)$$

  - ***t*** **is total wall thickness,**
  - **N is number of 45-degree turns,**
  - **f is friction factor calculated using Von Karmen relation given below**

- **f is defined by**

$$f = \frac{1}{\left(2\log_{10}\frac{D_H}{2\mu} + 1.74\right)^2}$$

  - **D_H is Hydraulic Diameter**
  - **μ is surface roughness**

AREVA

Equivalent Crack Morphology Parameters Overlaid Pipe

- **Total Pressure Drop due to Crack Face Roughness**

$$f_{eq}(t/D_H) = f_{original}(l_{original}/D_H) + f_{overlay}(l_{overlay}/D_H)$$

- **Evaluate Equivalent Crack Face Roughness for Overlaid Pipe**

$$\mu_{eq} = \frac{D_H}{2} 10^{\frac{1.74 - f_{eq}^{-0.5}}{2}}$$

AREVA

Equivalent Crack Morphology Parameters Overlaid Pipe

- **Pressure Drop due to Crack Path Turns**

$$f_{eq}(26N_{45,eq}) = f_{original}(26N_{45,original}) + f_{overlay}(26N_{45,overlay})$$

- **Evaluate Equivalent Number of 45° Turns**

$$N_{45,eq} = \frac{1}{13 f_{eq}}\left(f_{original} n_{90,original} l_{original} + f_{overlay} n_{90,overlay} l_{overlay}\right)$$

  - **N_{45}= ½*N_{90}**

AREVA

Summary

- **LBB for Weld Overlaid Structure can be demonstrated to meet LBB Acceptance Criteria, however:**
  - **PWSCC Morphology may make it difficult to meet Regulatory Safety Margins for nozzles whose ID is less than 12-inches**

- **Safety Margin of 2 was barely demonstrated for Overlaid DMW. If this location was left unmitigated and PWSCC Morphology is considered, then LBB Margins may not be met (1.6 instead of 2)**

- **Mitigation Using WOL May Improve LBB Safety Margin**
  - **Alloy 52M Weld Overlay is PWSCC Resistant**
  - **Increased wall thickness ➔Higher Load Carrying Capability ➔Larger Critical Flaw Size. This benefit is generally greater than:**
  - **Increased wall thickness ➔Longer Flow Path ➔Larger Leakage Flaw Size**

AREVA

AREVA Position on LBB PWSCC Mitigation Analysis

- ***Issue #1:***
- **If Weld Overlay is used to Mitigate PWSCC at a previously LBB approved piping, PWSCC Morphology need not be considered, for that location, provided:**
  - **The Weld Overlay, which serves as the New reactor coolant pressure boundary (RCPB) is made of PWSCC Resistant Material such as Alloy 52 and**
  - **The inner wall stresses of the original dissimilar metal weld (DMW), considering residual stresses with normal operating steady state condition loads (Operating pressure, deadweight, thermal expansion), are demonstrated to remain compressive so that ID surface cracks will not initiate or grow**
- **For the above situation, Fatigue only Morphology should be permitted to be used for LBB Analysis of the Overlaid Joint.**

AREVA

AREVA Position on LBB PWSCC Mitigation Analysis

Issue #2:

- **The inner wall of the PWSCC prone Alloy 82/182 DMW is the ideal region to be mitigated from PWSCC concerns**
  - **Use of Alloy 52 Inlay, Onlay or Cladding over the DMW serves as an "ideal barrier " against direct exposure of Alloy to 82/182 to the Primary Coolant and hence PWSCC.**
  - **Since the pipe geometry is essentially unchanged and PWSCC is mitigated at the ID of the pipe using PWSCC resistant materials, only the through-wall flaws due to fatigue need to be considered.**

- **When Alloy 52 Inlay, Onlay or Cladding is used to mitigate PWSCC, an LBB re-assessment (involving fatigue crack morphology), need not be considered "as a change in Methodology".**

AREVA