DiabloCanyonNPEm Resource

From: Tan, Miranda [M1TF@pge.com]
Sent: Monday, November 01, 2010 12:07 PM
To: Pick, Greg
Cc: Grebel, Terence
Subject: RE: Regional Inspection Spreadsheet
Attachments: deg jw pp U1.pdf; RESPONSE TO NRC QUESTIONS ON DEG JW PUMPS.doc

Greg,

Attached are information relating to Closed Cycle Cooling Water question. These are on IMS as well under # 199. We are still working on getting a copy of EPRI TR-107390 to you.

Best,
Miranda Tan
805 781 9415

From: Pick, Greg [mailto:Greg.Pick@nrc.gov]
Sent: Wednesday, October 27, 2010 9:07 AM
To: Tan, Miranda
Cc: DiabloCanyonNPEm Resource
Subject: RE: Regional Inspection Spreadsheet

See the attached questions from review of Closed Cooling Water, Open Cycle Cooling Water & FO Chemistry

---

From: Tan, Miranda [mailto:M1TF@pge.com]
Sent: Wednesday, October 27, 2010 8:14 AM
To: Pick, Greg
Cc: Grebel, Terence
Subject: Regional Inspection Spreadsheet

Greg,

Attached is the regional inspection spreadsheet.

Best,
Miranda Tan
805 781 9415

<<NRC Regional Inspection QA Spreadsheet 102610.xls>>

Hearing Identifier: DiabloCanyon_LicenseRenewal_NonPublic
Email Number: 2160

Mail Envelope Properties (D065043718A59C4B99DDA1862BB067DE01BA2429)

Subject: RE: Regional Inspection Spreadsheet
Sent Date: 11/1/2010 12:07:22 PM
Received Date: 11/1/2010 12:07:31 PM
From: Tan, Miranda

Created By: M1TF@pge.com

Recipients:
"Grebel, Terence" <TLG1@pge.com>
Tracking Status: None
"Pick, Greg" <Greg.Pick@nrc.gov>
Tracking Status: None

Post Office: exchange12.Utility.pge.com

Files	**Size**	**Date & Time**
MESSAGE	881	11/1/2010 12:07:31 PM
deg jw pp U1.pdf	323424	
RESPONSE TO NRC QUESTIONS ON DEG JW PUMPS.doc	30272	

Options
Priority: Standard
Return Notification: No
Reply Requested: No
Sensitivity: Normal
Expiration Date:
Recipients Received:

WATER PUMP AND DRIVE

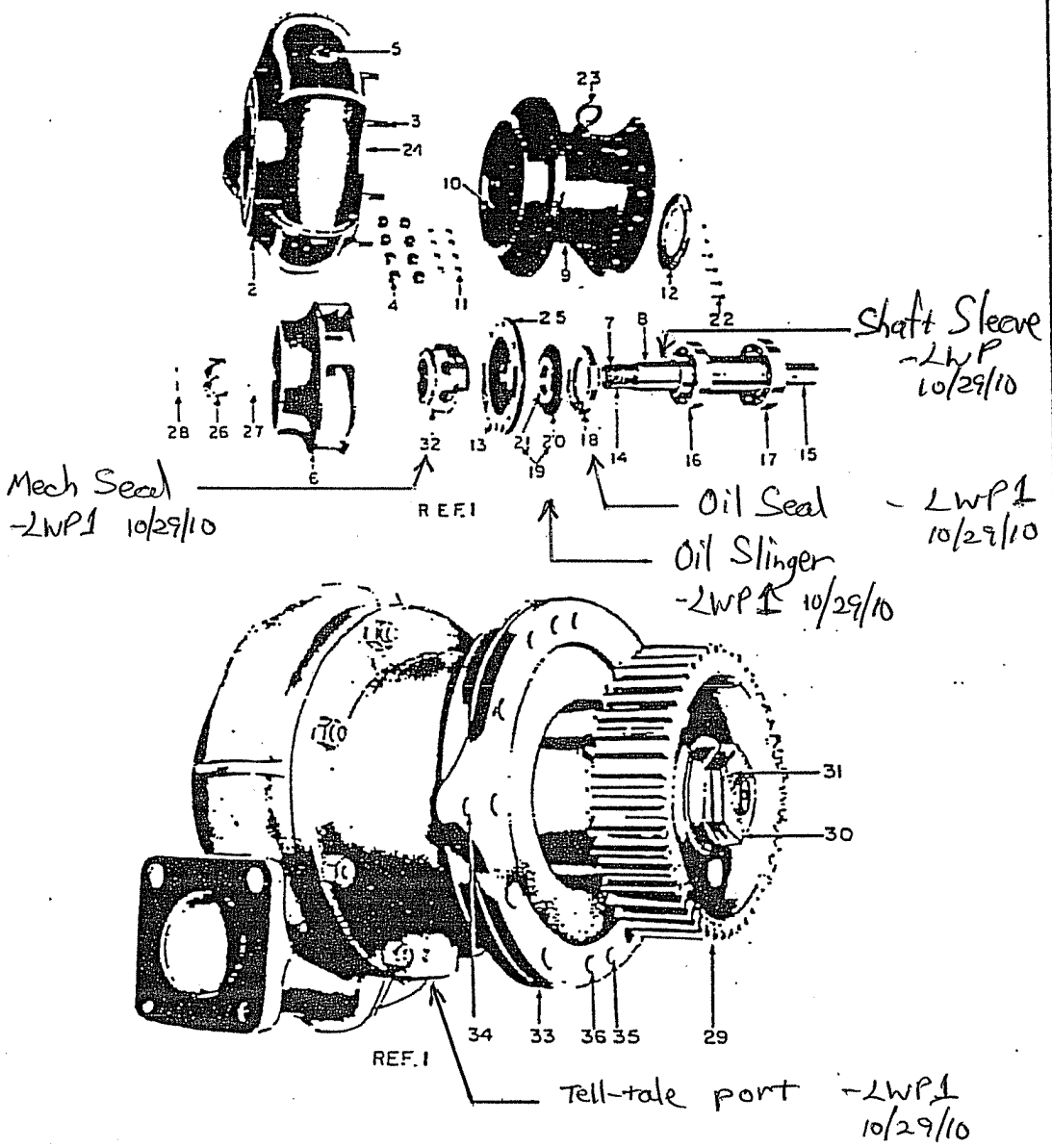

Ref. No.	Part No.	No. Req.	Description
	*22500168	1	$Water pump, complete with gear (for 900 RPM engine speed)
1	*22500167	1	$Water pump, complete with gear

$ Customer to rotate casing to suit application.
* Added or changed since last issue.

35 NEW PAGE

Ref. No.	Part No.	No. Req.	Description
2	22511223 OR 22511212	1	Casing, impeller
3	21514218	8	Stud, casing to frame, 1/2-13 x 2
4	21513724	8	Nut, stop, 1/2-13
5	1639376	1	Plug, pipe, 1 IPS, sq. h.
	*515580A	1	Plug, pipe, 1 IPS, sq. h. (used on pump Pt. No. 22500122-1)
	16393718	1	Plug, pipe, 3/8" IPS, sq.h.
6	2251149-2	1	Impeller (used on pump Pt. No.22500123-1)
6	22511414	1	Impeller (used on Pt. No. 22500122-1)
	2251284-2	1	Sleeve, tapered, shaft to impeller
7	22511513	1	Shaft with wear sleeve
	69 22511511	1	69 Shaft with wear sleeve (used on pump Pt.No. 22500122)
8	~~2251288~~	1	P.G.&E FABRICATED 316 Sleeve for shaft (REF. 95-1908)
	22512812	1	Sleeve (used on pump Pt. No. 22500122)
9	2251132-1	1	Frame, bearing
10	21535222	8	Stud, seal plate to frame, 3/8-16 x 1-1/2
11	21513725	8	Nut, slotted, 3/8-16,brass
12	2251172	1	Retainer, thrust bearing
13	2251323-1	1	Seal plate
14	21512716	1	Key, impeller, 3/8 x 3/8 x 1
15	2151272	1	Key, gear, 1/2 x 1/2 x 2
16	2251193	1	Bearing, impeller end
17	2251201	1	Bearing, drive end
18	2251211-2	1	Oil seal
19	2251181-1	1	Oil slinger
20	2251182	1	Disc for slinger
21	2251521	1	Hub for slinger
	21570011	1	øLockwire, 16 ga. x 30 in., brass
22	21549624	6	Capscrew, retainer to bearing csg., 5/16-18 x 1
	2157001	1	øLockwire, retainer to bearing csg., .054 dia. x 28 in.
23	2153605	1	Eyebolt
24	2251252	1	Gasket, casing to frame
25	2251253-4	1	Gasket, seal plate to frame
26	21558212	1	Nut, impeller, spl.
27	2251383	1	Washer, spl., for impeller nut
28	21514085	1	Cotter pin, spl., for impeller nut

*Added or changed since last issue.
øOrder quantity required, will ship to nearest stock length.

Ref. No.	Part No.	No. Req.	Description
29	*2351156-1	1	Gear, drive
30	2151261	1	Nut, spl., slotted, gear to pump
	2157001	1	øLockwire, capscrew locking, .054 dia. x 2-1/2 in.
31	2154961	1	Capscrew, locking nut, 5/16-18 x 5/8
32	2250034-3	1	Water seal unit
	70 21542959	1	"O" ring
	2251512	1	Plate, pump and gear cover
33	2151973-1	2	Gasket for plate
34	2151352-1	2	Capscrew, plate to gear cover, 5/8-11 x 1-1/2
	2151311-1	2	Lockwasher, 5/8
35	2151775	2	Dowel, taper, plate to gear cover, #9 x 1-1/2
36	21555874	12	Capscrew, pump to gear cover, 5/8-11 x 2-1/4
	2151311-1	12	Lockwasher, 5/8

* Added or changed since last issue.
ø Order quantity required, will ship to nearest stock length.

RESPONSE TO NRC QUESTIONS ON DEG JW PUMPS

-Larry Price 10/29/10

The Tell Tale leakage from the JW or oil seal – what causes leakage of this sort or leakage and what does it mean (i.e., what is wearing out)?

The "tell-tale" is a drain ported into the annulus which is the atmospheric side of both the mechanical seal and the lip seal. The mechanical seal is the pressure boundary for the Jacket Water Pump and seals the chromated jacket water within the pump pressure boundary. The lip seal forms a seal around the gear driven pump shaft at the atmosphere end of the bearing housing. The pump bearings are lubricated by the engine crankcase oil. Any leakage from the mechanical seal and / or the lip seal is allowed to drain out of the annulus between these two seals for the following reasons:

1. Prevents jacket water from getting into the crankcase in the event of mechanical seal leakage.
2. Prevents lube oil from getting into the jacket water system in the event of a lip seal failure.
3. Allows detection of jacket water leakage through the mechanical seal and or oil leakage through the lip seal.

What does tell-tale leakage mean (what is wearing out)?

Jacket water leakage from the tell-tale means that jacket water is leaking across the dynamic seal faces (between the rotating and stationary seal faces), between the shaft sleeve and mechanical seal bellows, or through the gasket that seals the Seal Plate to the Bearing Frame. Minor drips are normal for a mechanical seal as leakage across the seal face is required for lubrication and cooling. Leakage of oil out of the tell tale indicates oil is leaking past the lip seal. Minor seepage across a lip seal is normal and typically wouldn't result in any visible drips.

In conclusion the tell-tale will normally show signs of minor seepage. Significant leakage reveals there is a problem in the mechanical seal area of the pump and/or the oil seal. Oil seal leakage across the lip seal is never a catastrophic failure. The oil fed to this area is by splash lubrication rather than a pressurized source.

Can I get a vendor drawing or vendor manual drawing of the jacket water cooling pump? Specifically, I am interested in the location of the tell tale drain?

The Jacket Water Pump parts exploded view is attached to the email. The first page has been marked up with explanatory notes. The tell-tale drain is a port in the bearing frame which connects to the annulus between the mechanical seal and the oil lip seal.

For pump 1-1 shaft sleeve corrosion noted – what caused the corrosion? Is this expected?

Years ago the Maintenance Engineer noted a correlation between jacket water seepage out of the tell-tale and finding corrosion on the shaft sleeve under the mechanical seal bellows. Also it was noted that this leakage typically occurred following maintenance where the JW System was drained below the JW Pump. It was determined that draining down the system to support maintenance allowed oxygen access to the shaft sleeve area. The crevices between the mechanical seal bellows and the carbon steel shaft sleeve support corrosion in the presence of oxygen. This was confirmed by the fact that this condition did not occur when the JW level was kept above the mechanical seal elevation. Once the shaft sleeves were converted to stainless steel, this problem did not recur even when the JW system was drained below the seal elevation.

What is the average life of the JW pumps if we remove the pump 2-1 July 1992 mechanical seal problem from the data? I assume this failure resulted from the maintenance error that we discussed?

13 years

Can I get a vendor drawing or vendor manual drawing of the jacket water cooling pump? Specifically, I am interested in the location of the tell tale drain?

Vendor manual parts drawing attached.

Copy of EPRI TR-107390, “Technical Basis of Treatment Chemicals Used for Corrosion Control”

Copy to be provided by others.