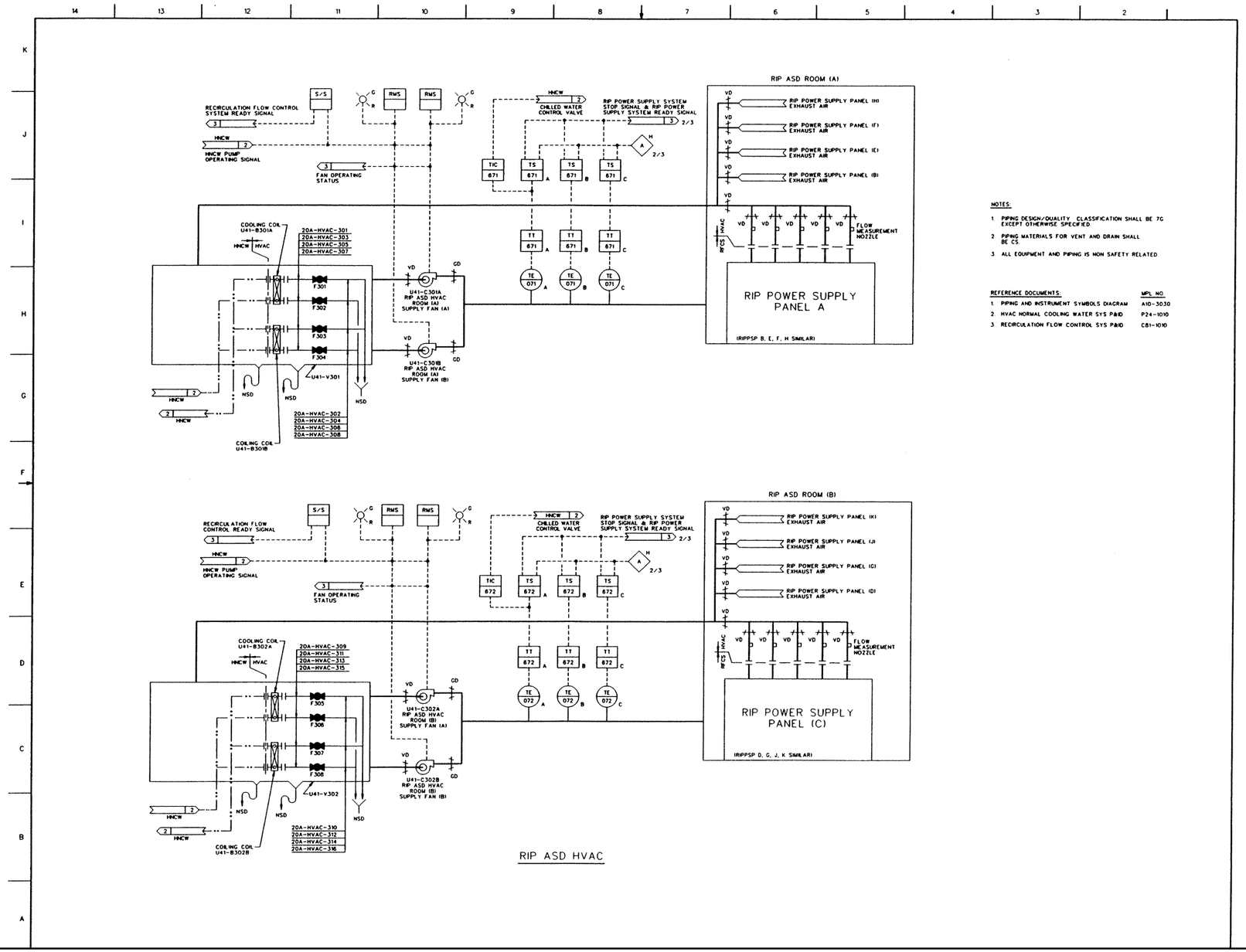

Figure 9.4-5 Reactor Internal Pump ASD HVAC System

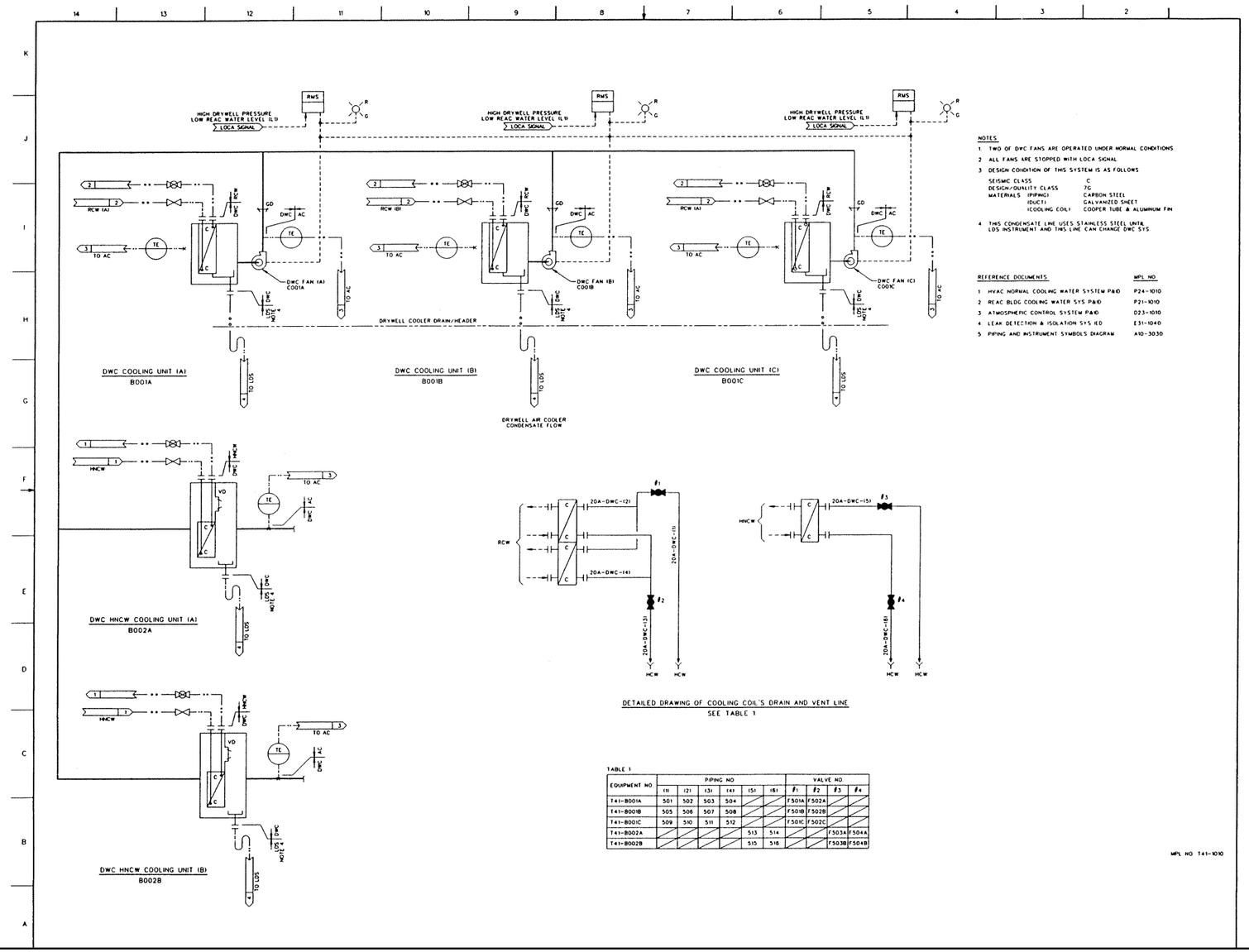

TABLE 1

EQUIPMENT NO	PIPING NO						VALVE NO			
	(1)	(2)	(3)	(4)	(5)	(6)	#1	#2	#3	#4
T41-B001A	501	502	503	504			F501A	F502A		
T41-B001B	505	506	507	508			F501B	F502B		
T41-B001C	509	510	511	512			F501C	F502C		
T41-B002A					513	514			F503A	F504A
T41-B002B					515	516			F503B	F504B

Figure 9.4-8 Drywell Cooling System P&ID (Sheet 1 of 1)

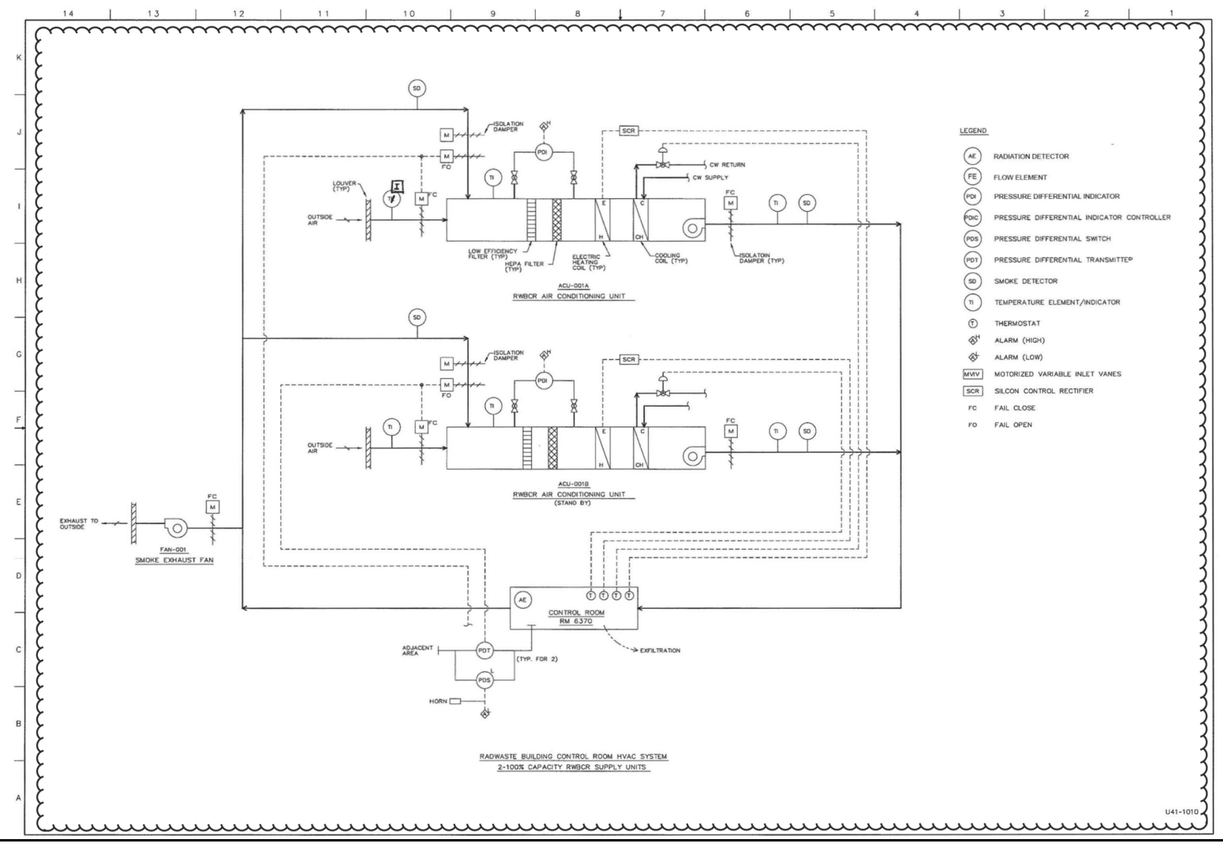

Figure 9.4-10 Radwaste Building HVAC P&ID (Sheet 1 of 3)

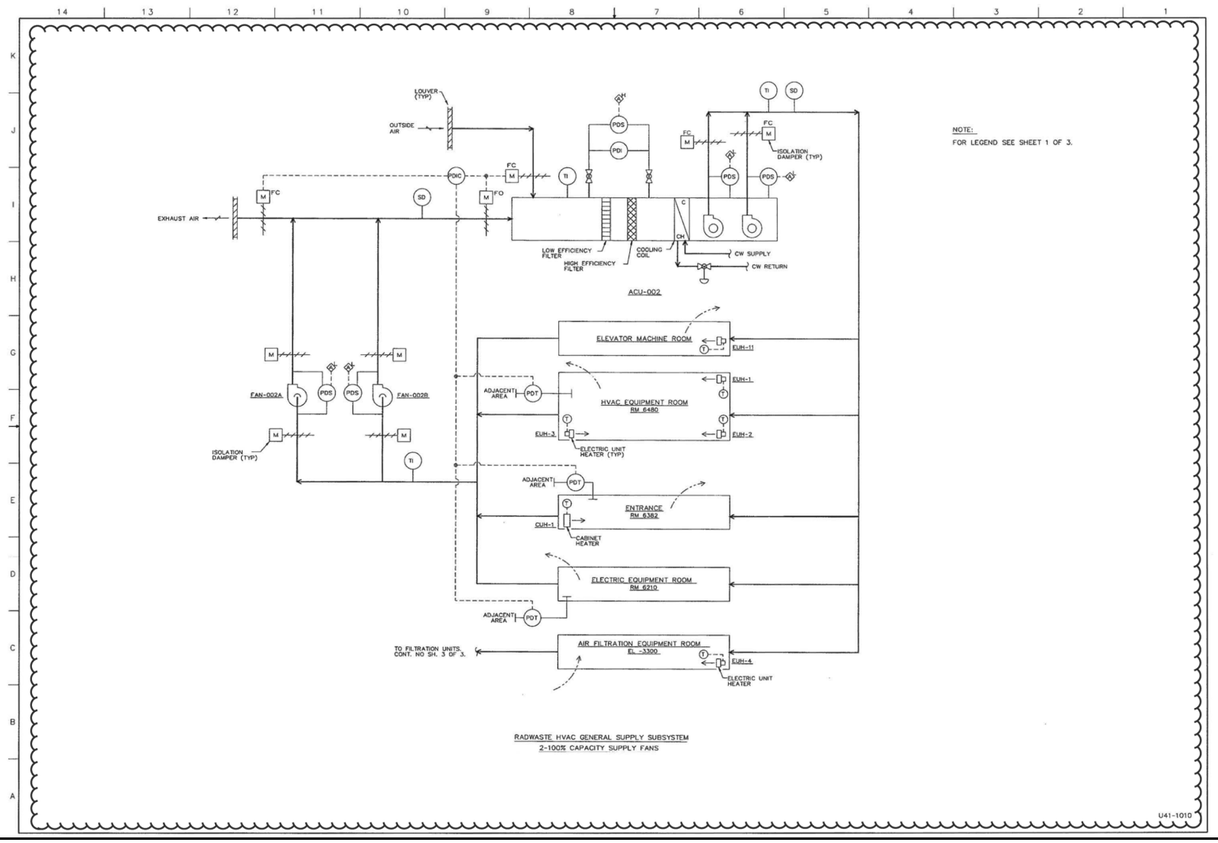

Figure 9.4-10 Radwaste Building HVAC P&ID (Sheet 2 of 3)

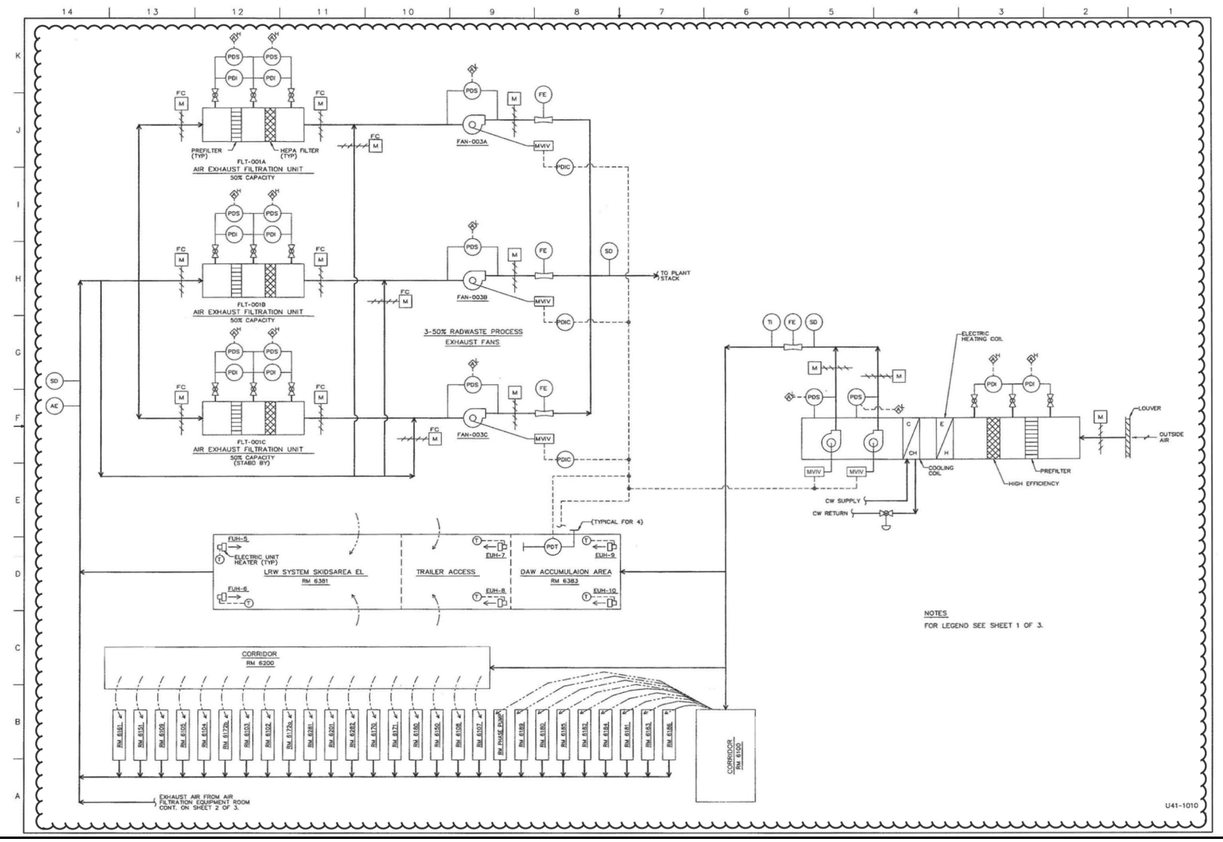

Figure 9.4-10 Radwaste Building HVAC P&ID (Sheet 3 of 3)

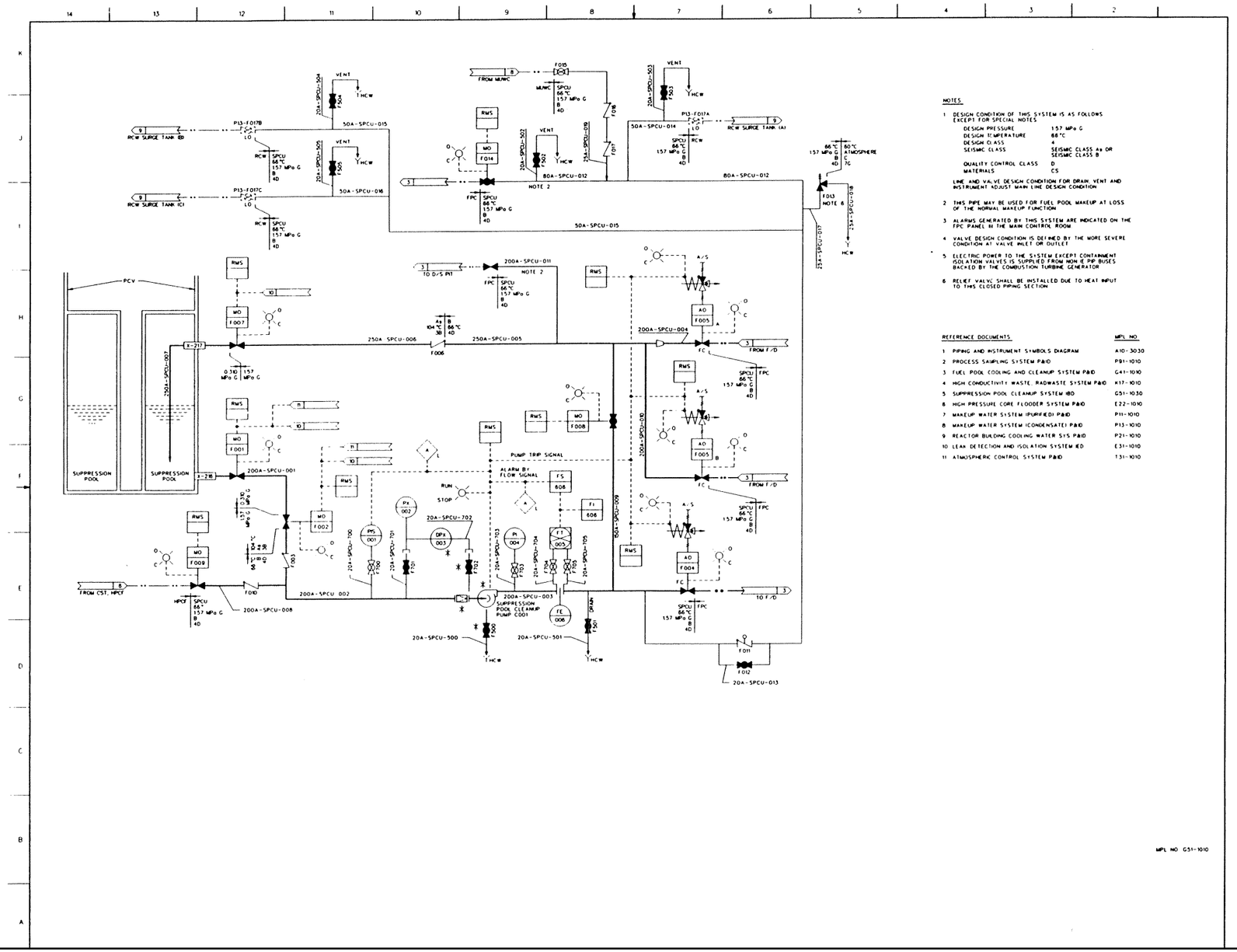

Figure 9.5-1 Suppression Pool Cleanup System P&ID (Sheet 1 of 1)

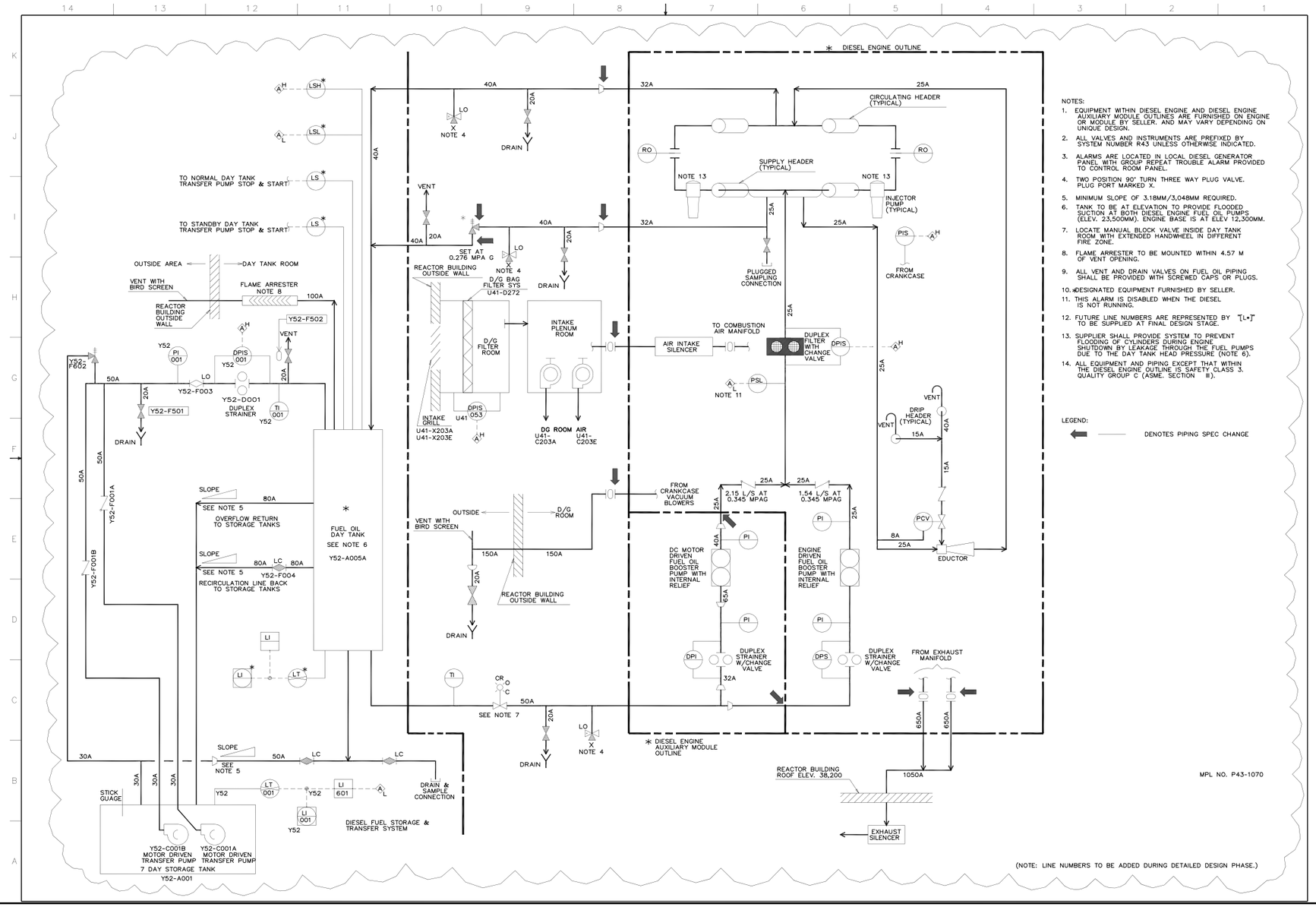

Figure 9.5-6 Standby Diesel Generator Fuel Oil and Intake and Exhaust System (Sheet 1 of 1)

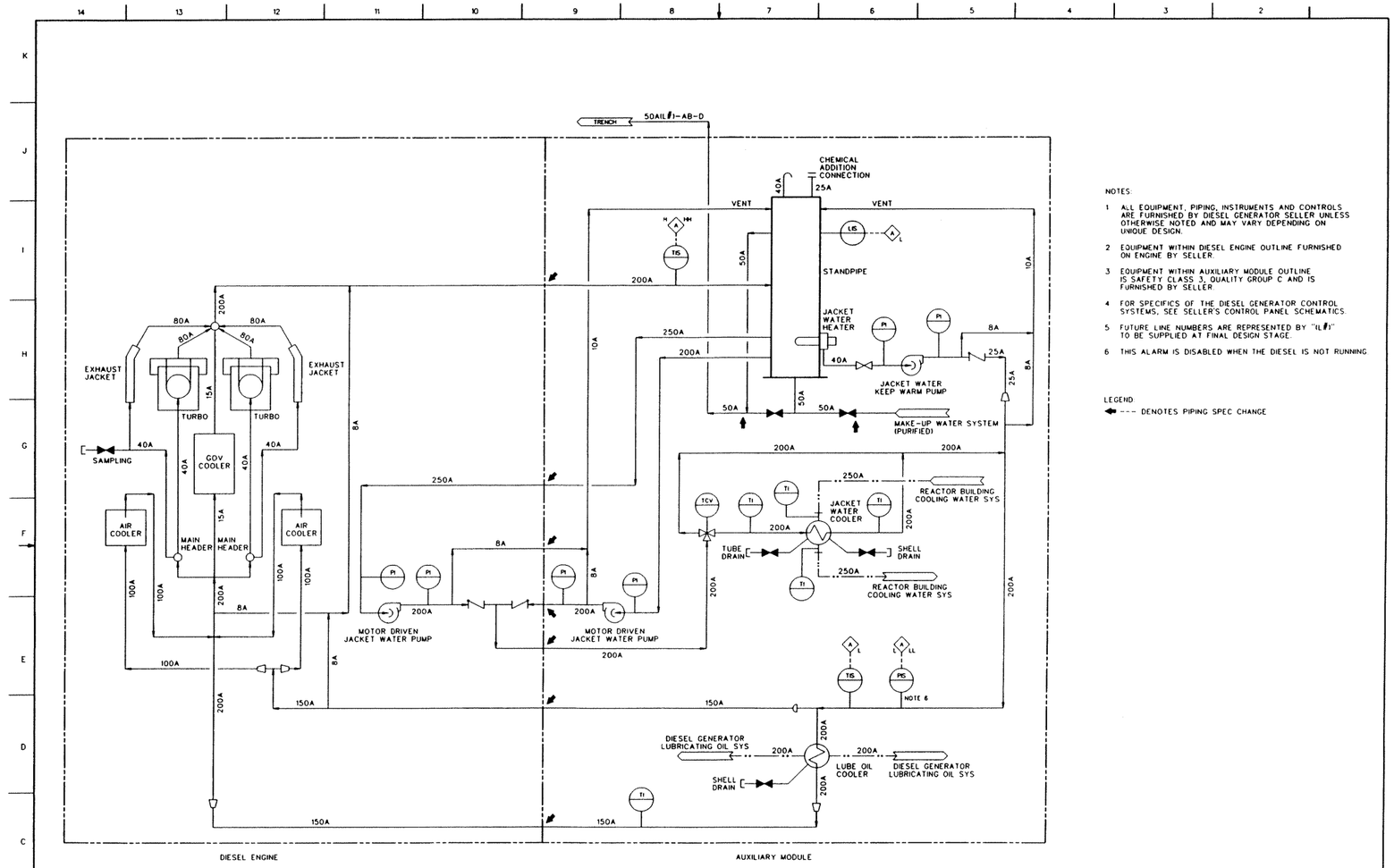

NOTES:

1. ALL EQUIPMENT, PIPING, INSTRUMENTS AND CONTROLS ARE FURNISHED BY DIESEL GENERATOR SELLER UNLESS OTHERWISE NOTED AND MAY VARY DEPENDING ON UNIQUE DESIGN.
2. EQUIPMENT WITHIN DIESEL ENGINE OUTLINE FURNISHED ON ENGINE BY SELLER.
3. EQUIPMENT WITHIN AUXILIARY MODULE OUTLINE IS SAFETY CLASS 3, QUALITY GROUP C AND IS FURNISHED BY SELLER.
4. FOR SPECIFICS OF THE DIESEL GENERATOR CONTROL SYSTEMS, SEE SELLER'S CONTROL PANEL SCHEMATICS.
5. FUTURE LINE NUMBERS ARE REPRESENTED BY "IL#1" TO BE SUPPLIED AT FINAL DESIGN STAGE.
6. THIS ALARM IS DISABLED WHEN THE DIESEL IS NOT RUNNING.

LEGEND:

--- DENOTES PIPING SPEC CHANGE

Figure 9.5-7 Standby Diesel Generator Jacket Cooling Water System

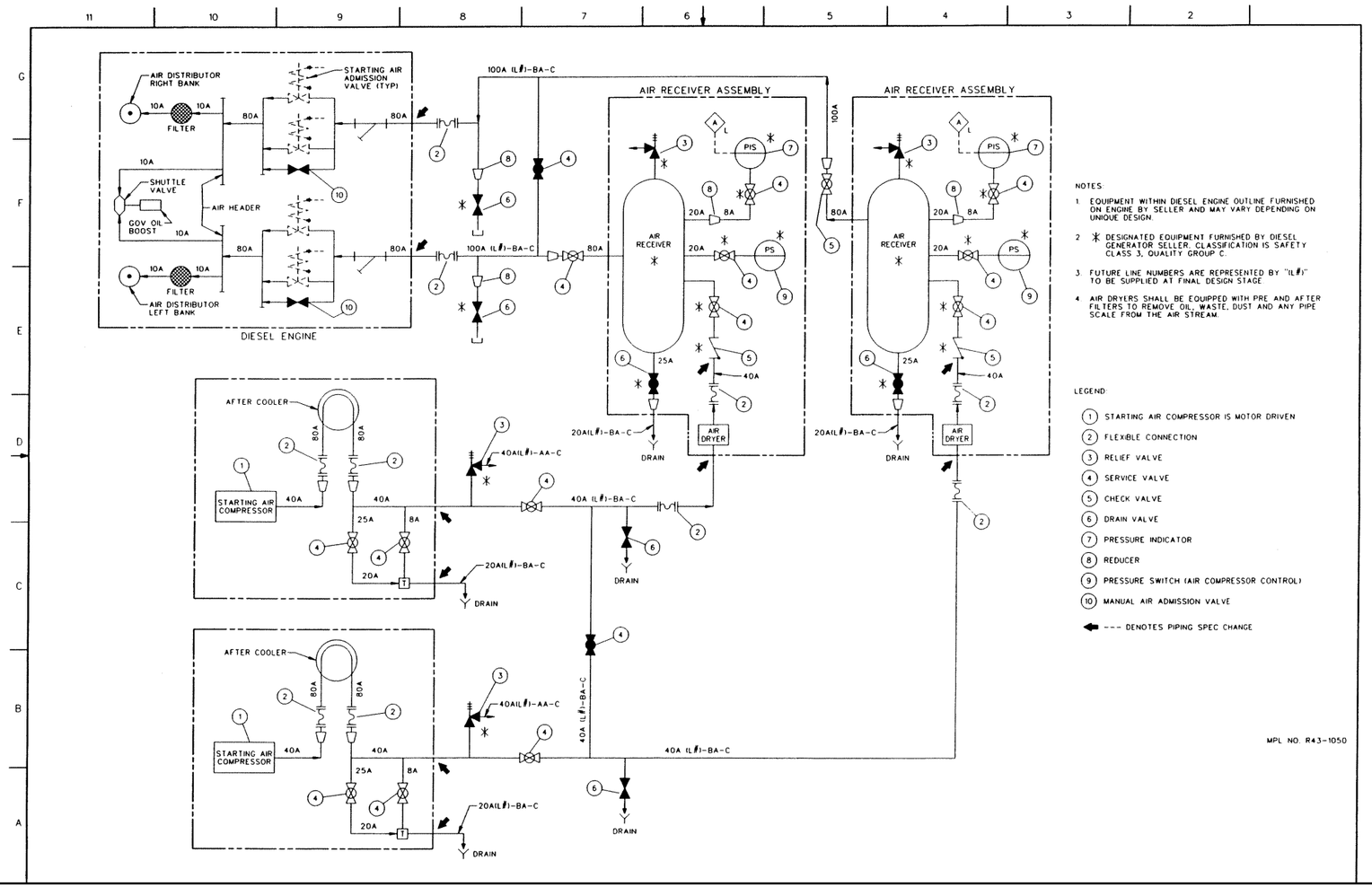

Figure 9.5-8 Standby Diesel Generator Starting Air System

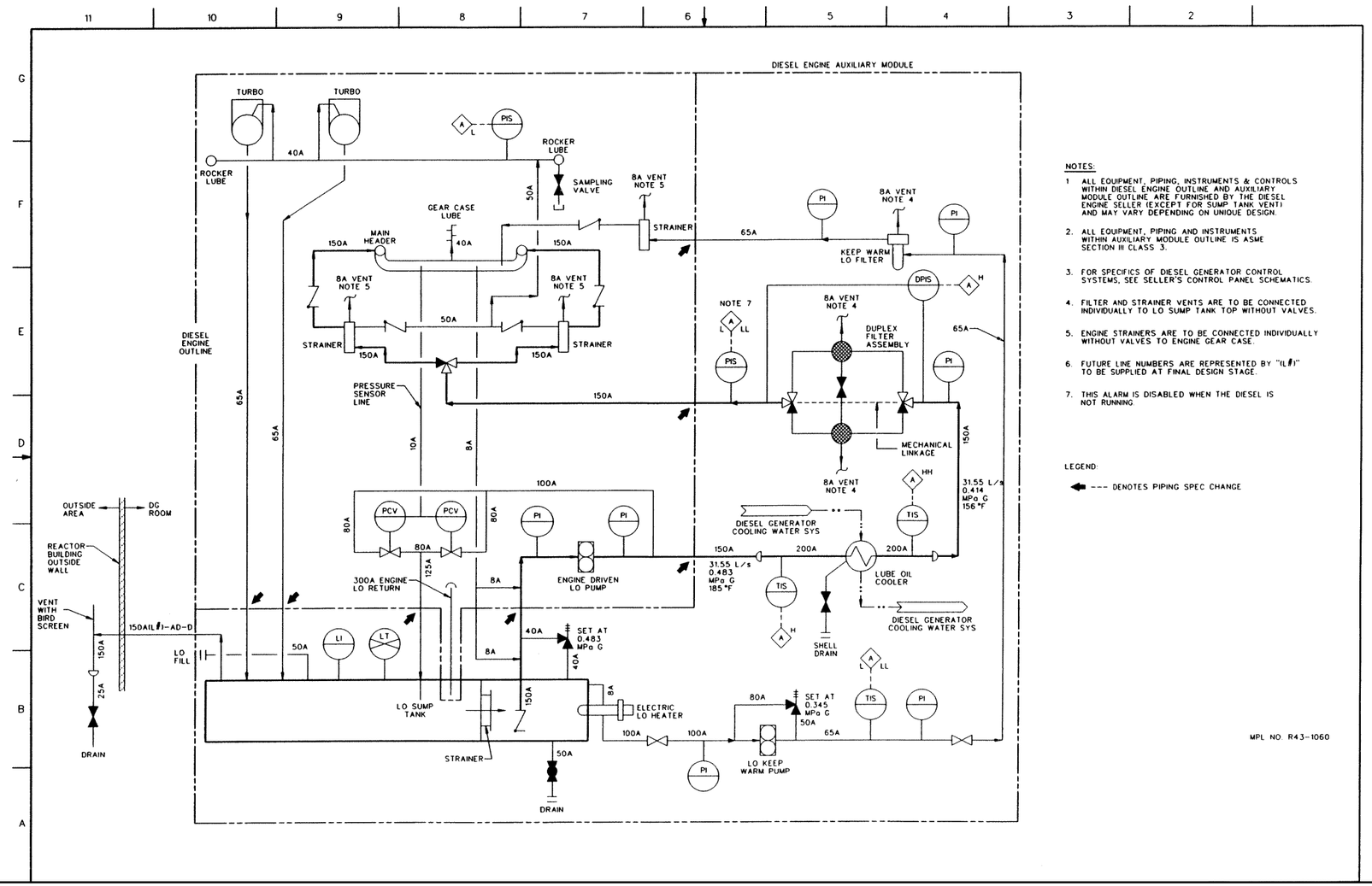

Figure 9.5-9 Standby Diesel Generator Lubricating Oil System

Redacted Security-Sensitive Information

Figure 9A.4-1 Reactor Building Fire Protection at El. -8200 mm

Redacted Security-Sensitive Information

Figure 9A.4-2 Reactor Building Fire Protection at El. -1700 mm

Redacted Security-Sensitive Information

Figure 9A.4-3 Reactor Building Fire Protection at El. 4800/8500 mm

Redacted Security-Sensitive Information

Figure 9A.4-4 Reactor Building Fire Protection at El. 12300 mm

Redacted Security-Sensitive Information

Figure 9A.4-5 Reactor Building Fire Protection at El. 18100 mm

Redacted Security-Sensitive Information

Figure 9A.4-6 Reactor Building Fire Protection at El. 23500 mm

Redacted Security-Sensitive Information

Figure 9A.4-7 Reactor Building Fire Protection at El. 27200 mm

Redacted Security-Sensitive Information

Figure 9A.4-8 Reactor Building Fire Protection at El. 31700/38200 mm

Redacted Security-Sensitive Information

Figure 9A.4-9 Reactor Building Fire Protection at Section A-A

Redacted Security-Sensitive Information

Figure 9A.4-10 Reactor Building Fire Protection at Section B-B

Redacted Security-Sensitive Information

Figure 9A.4-11 Control Building Fire Protection, Section B-B

Redacted Security-Sensitive Information

Figure 9A.4-12 Control Building Fire Protection at El. -8200 mm

Redacted Security-Sensitive Information

Figure 9A.4-13 Control Building Fire Protection at El. -2150 mm

Redacted Security-Sensitive Information

Figure 9A.4-14 Control Building Fire Protection at El. 3500 mm

Redacted Security-Sensitive Information

Figure 9A.4-15 Control Building Fire Protection at El. 7900 mm

Redacted Security-Sensitive Information

Figure 9A.4-16 Control Building Fire Protection at El. 12300 mm

Redacted Security-Sensitive Information

Figure 9A.4-16A Control Building Fire Protection at El. 17150 mm

Redacted Security-Sensitive Information

Figure 9A.4-16B Control Building Fire Protection at El. 22200 mm

Redacted Security-Sensitive Information

Figure 9A.4-17 Turbine Building Fire Protection at El. 2300 mm

Redacted Security-Sensitive Information

Figure 9A.4-18 Turbine Building Fire Protection at El. 6300 mm

Redacted Security-Sensitive Information

Figure 9A.4-19 Turbine Building Fire Protection at El. 12300 mm

Redacted Security-Sensitive Information

Figure 9A.4-20 Turbine Building Fire Protection at El. 19700 mm

Redacted Security-Sensitive Information

Figure 9A.4-21 Turbine Building Fire Protection at El. 27800 mm

Redacted Security-Sensitive Information

Figure 9A.4-28 Radwaste Building Fire Protection, Sections A-A and B-B

Redacted Security-Sensitive Information

Figure 9A.4-29 Radwaste Building Fire Protection at El – 1700 mm

Redacted Security-Sensitive Information

Figure 9A.4-30 Radwaste Building Fire Protection at El 5300 mm

Redacted Security-Sensitive Information

Figure 9A.4-31 Radwaste Building Fire Protection at El 12300 mm

Redacted Security-Sensitive Information

Figure 9A.4-32 Radwaste Building Fire Protection at El 18300 mm

Redacted Security-Sensitive Information

Figure 9A.4-33 Turbine Building Fire Protection at El. 38300 mm

Redacted Security-Sensitive Information

Figure 9A.4-34 Turbine Building Fire Protection at El. 47200 mm