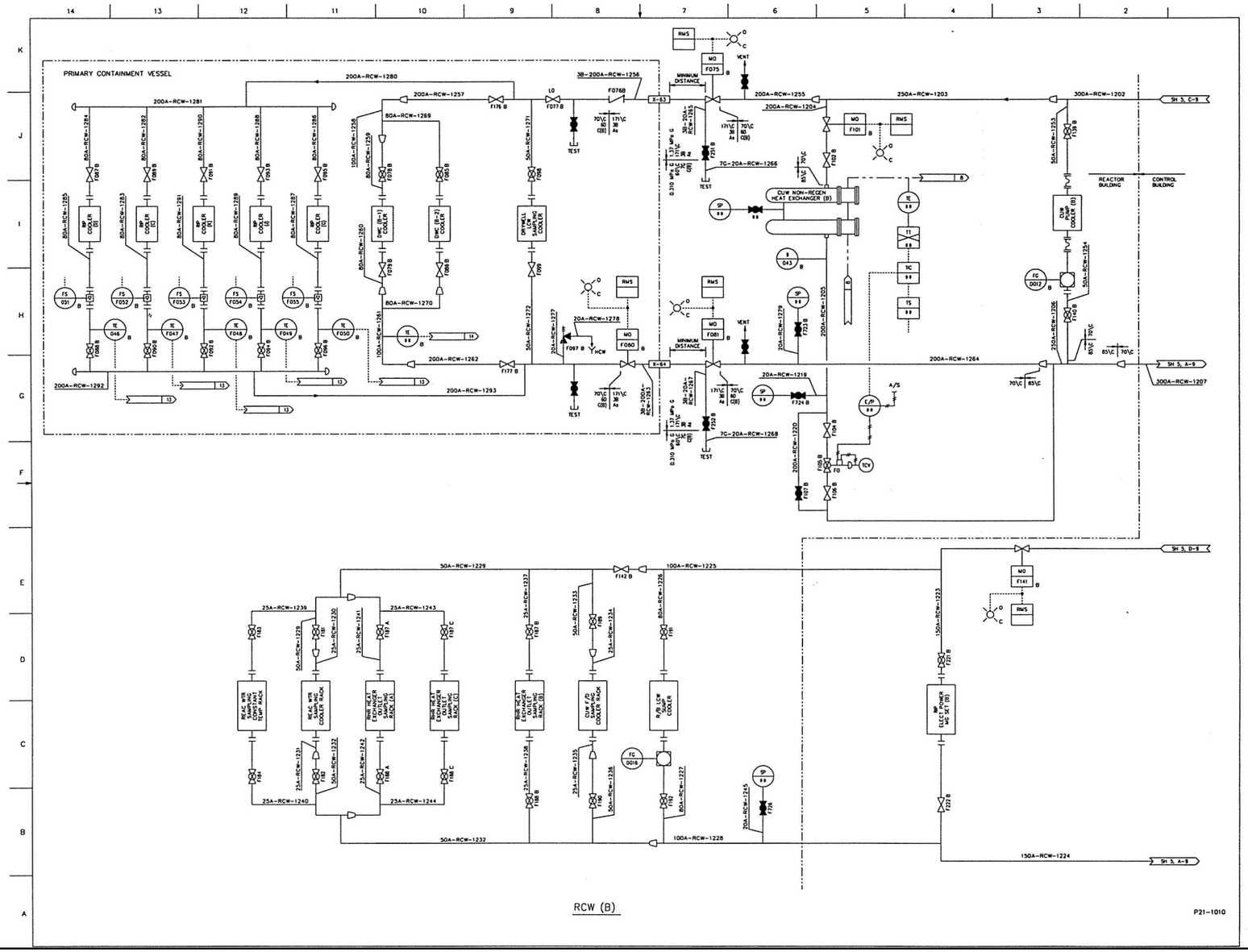

Figure 9.2-1 Reactor Building Cooling Water System P&ID (Sheet 6 of 9)

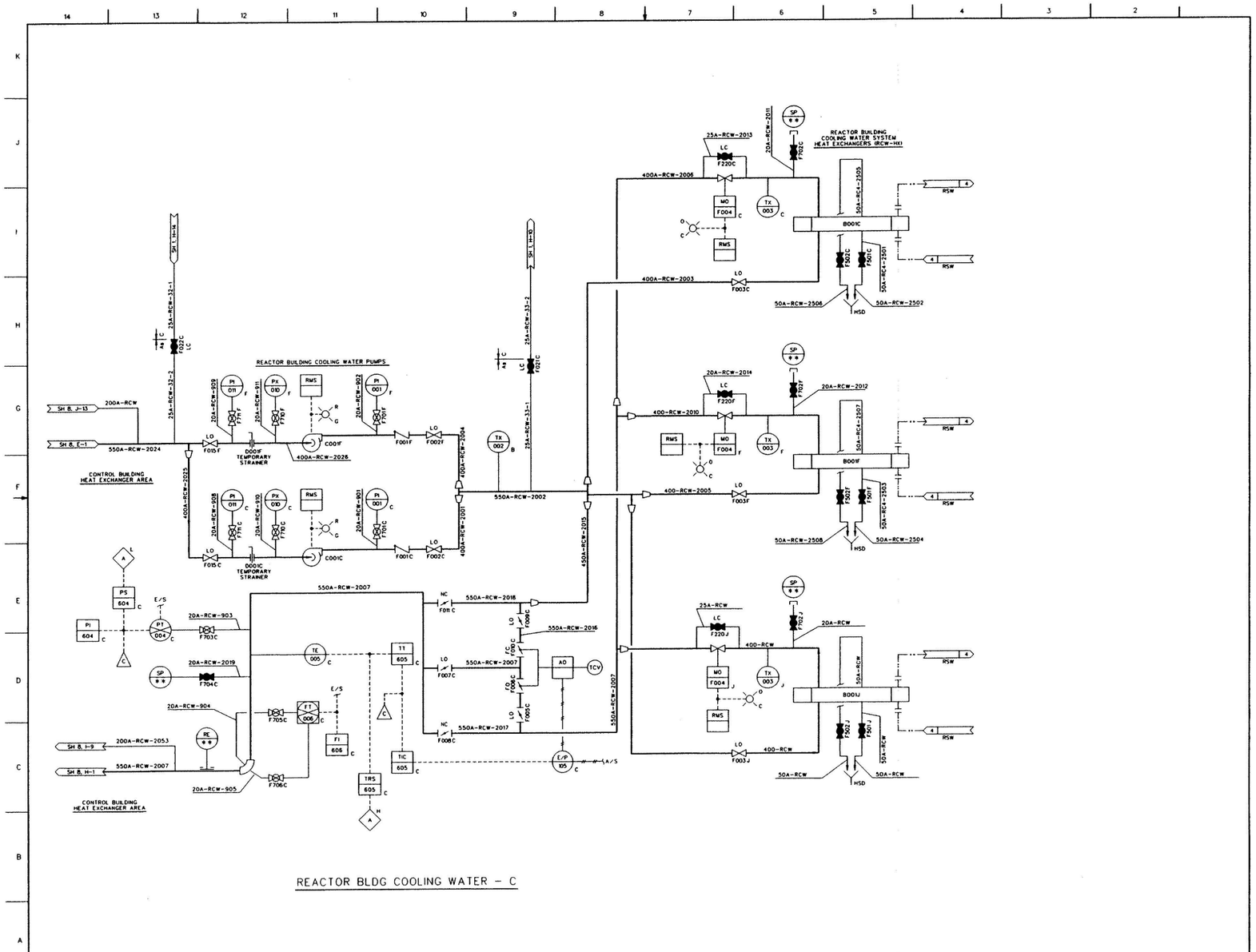

Figure 9.2-1 Reactor Building Cooling Water System P&ID (Sheet 7 of 9)

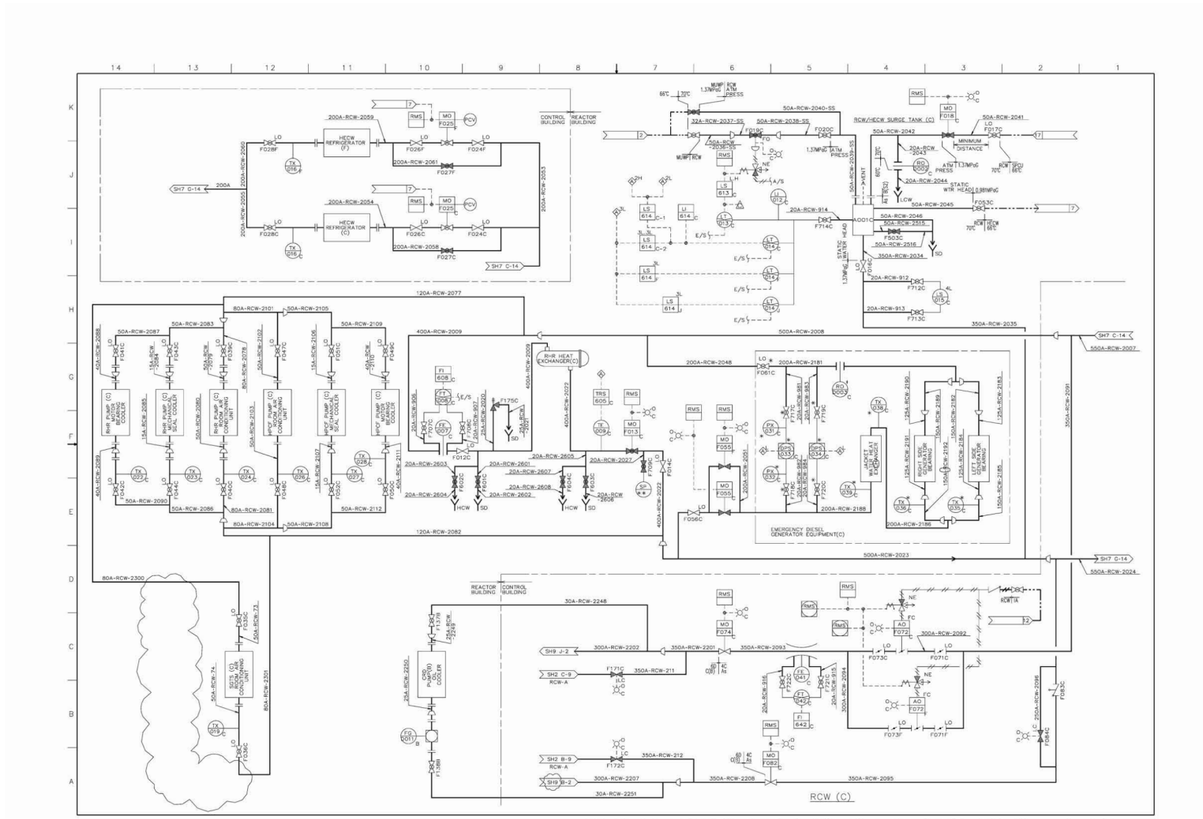

Figure 9.2-1 Reactor Building Cooling Water System P&ID (Sheet 8 of 9)

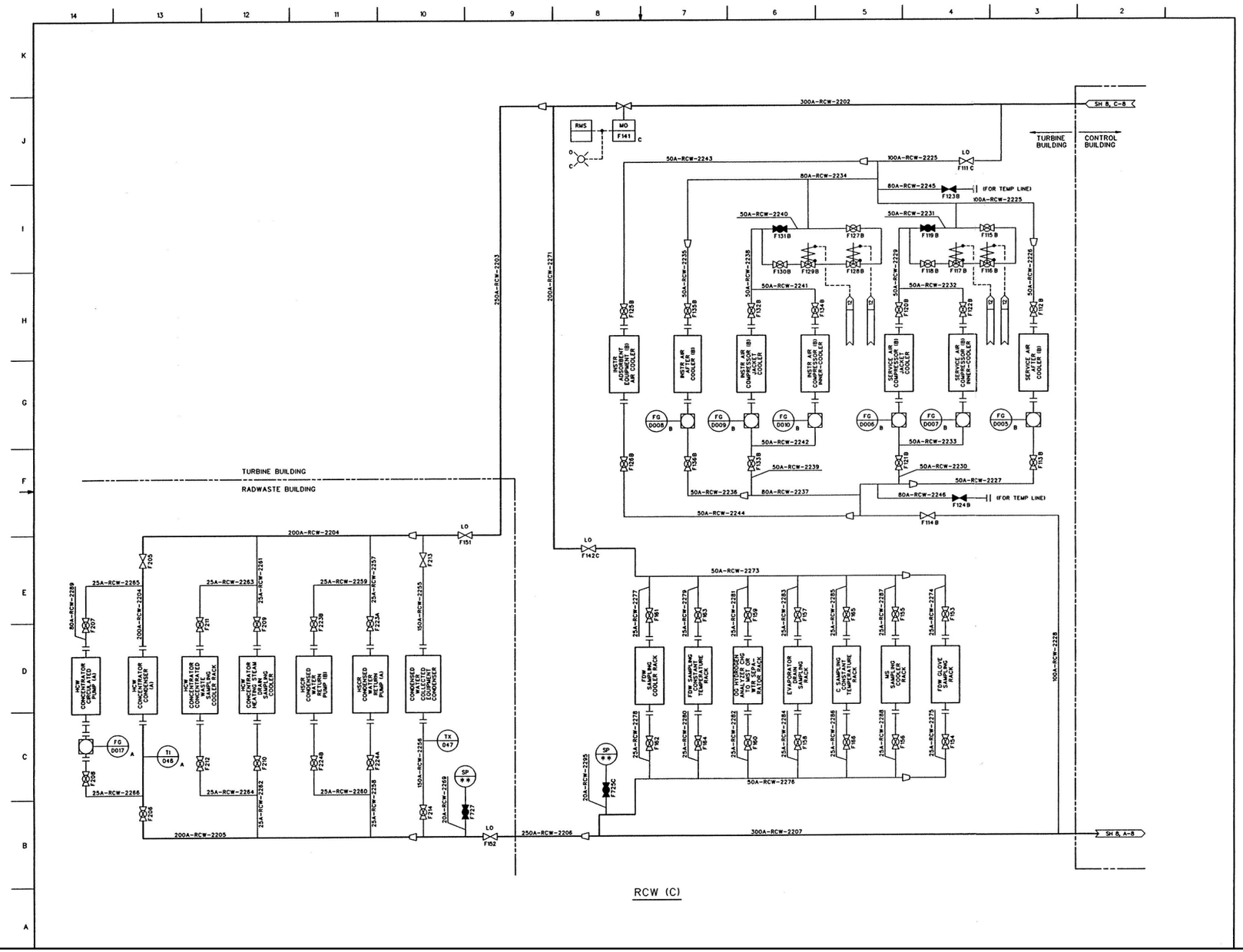

Figure 9.2-1 Reactor Building Cooling Water System P&ID (Sheet 9 of 9)

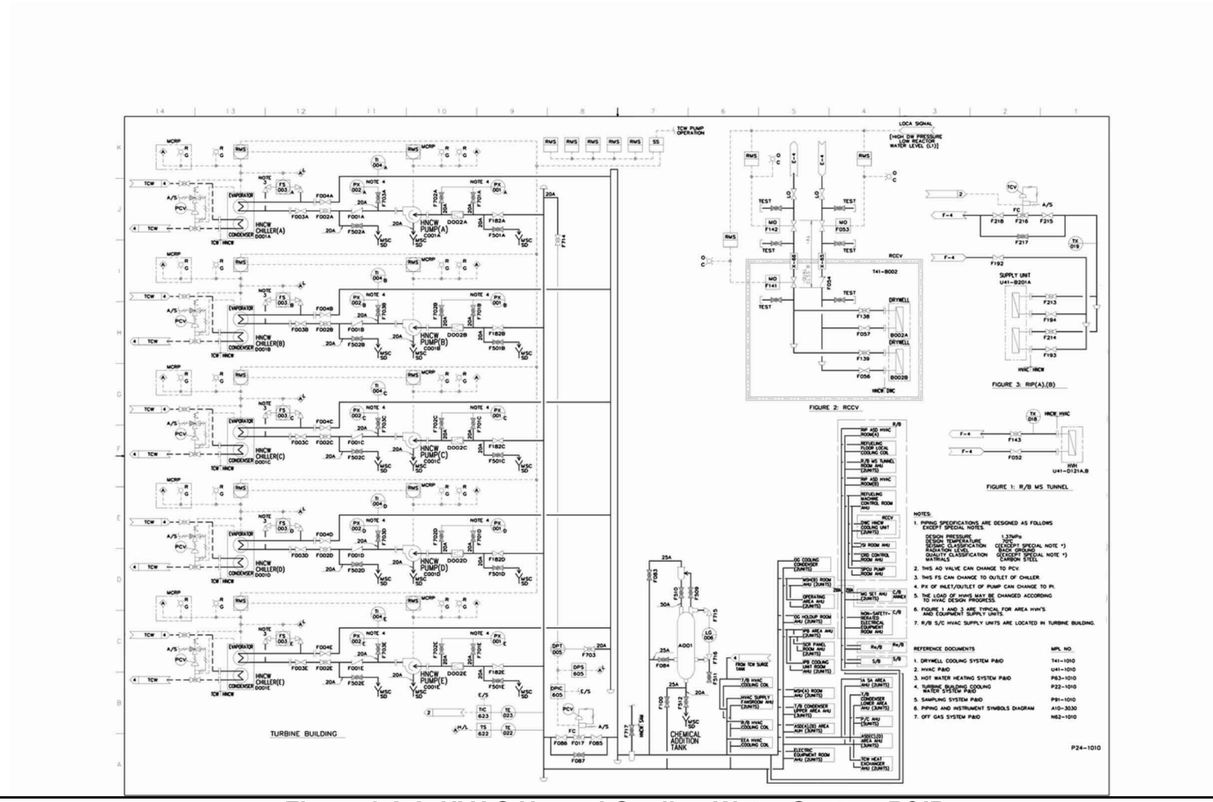

Figure 9.2-2 HVAC Normal Cooling Water System P&ID

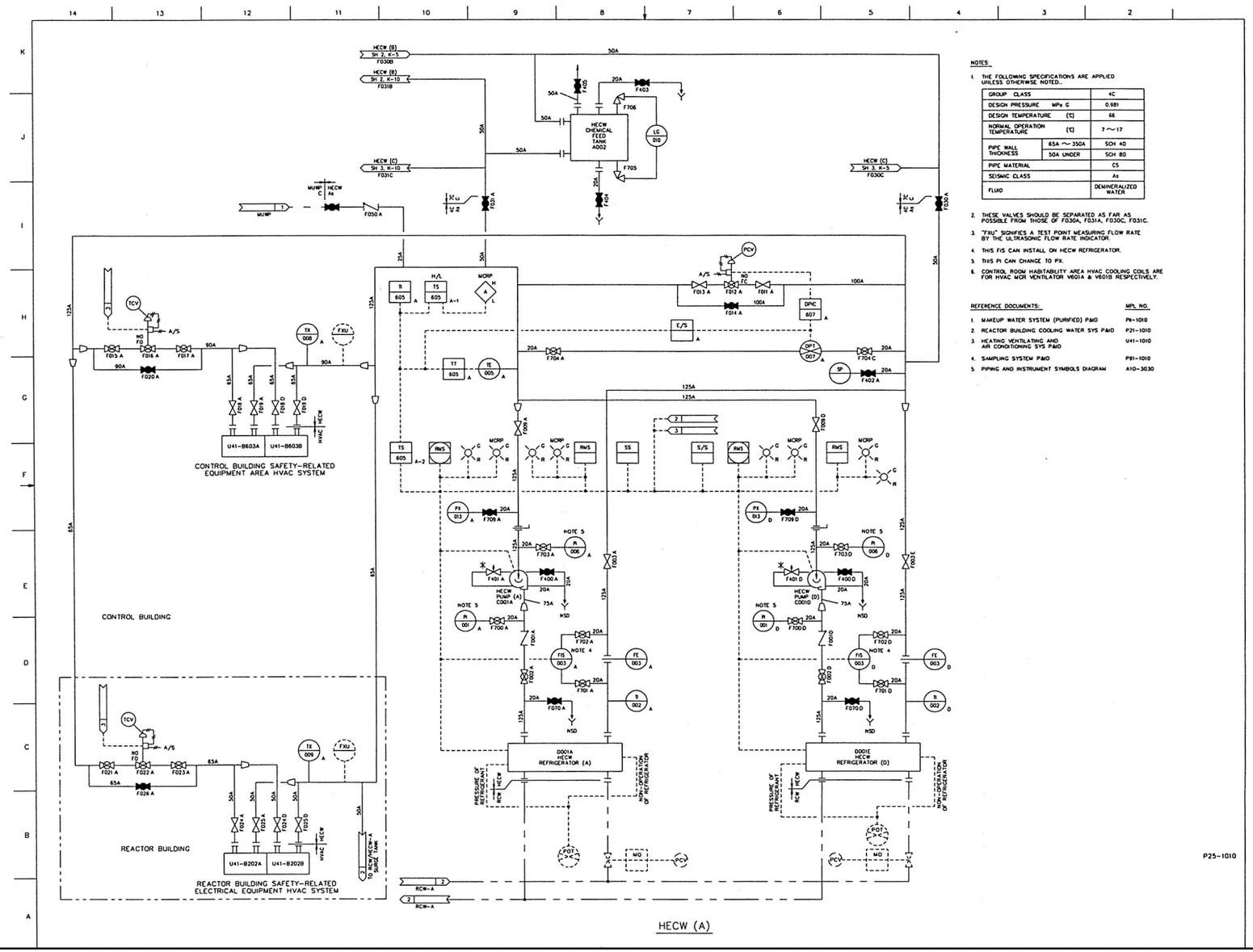

Figure 9.2-3 HVAC Emergency Cooling Water System P&ID (Sheet 1 of 3)

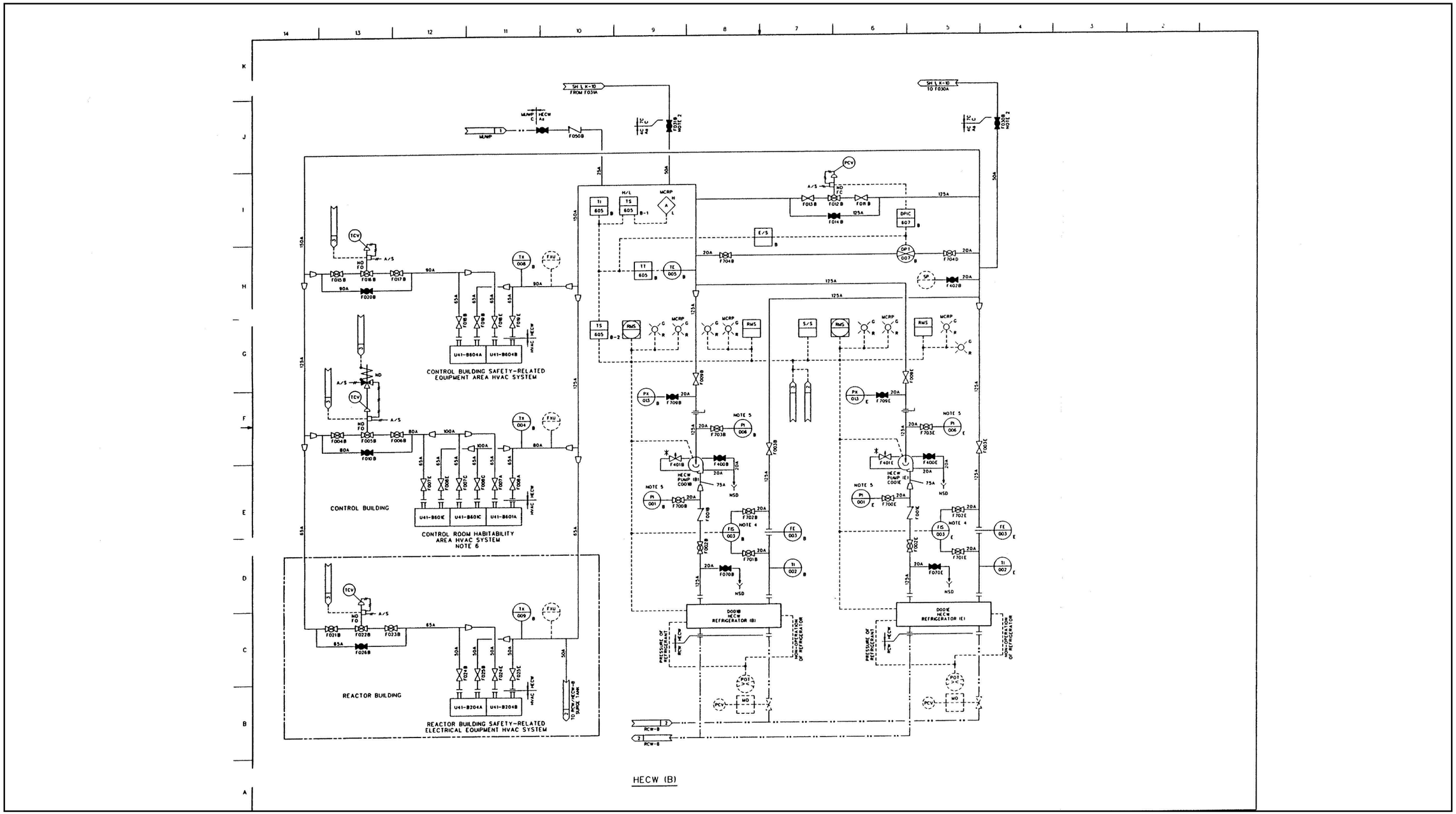

Figure 9.2-3 HVAC Emergency Cooling Water System P&ID (Sheet 2 of 3)

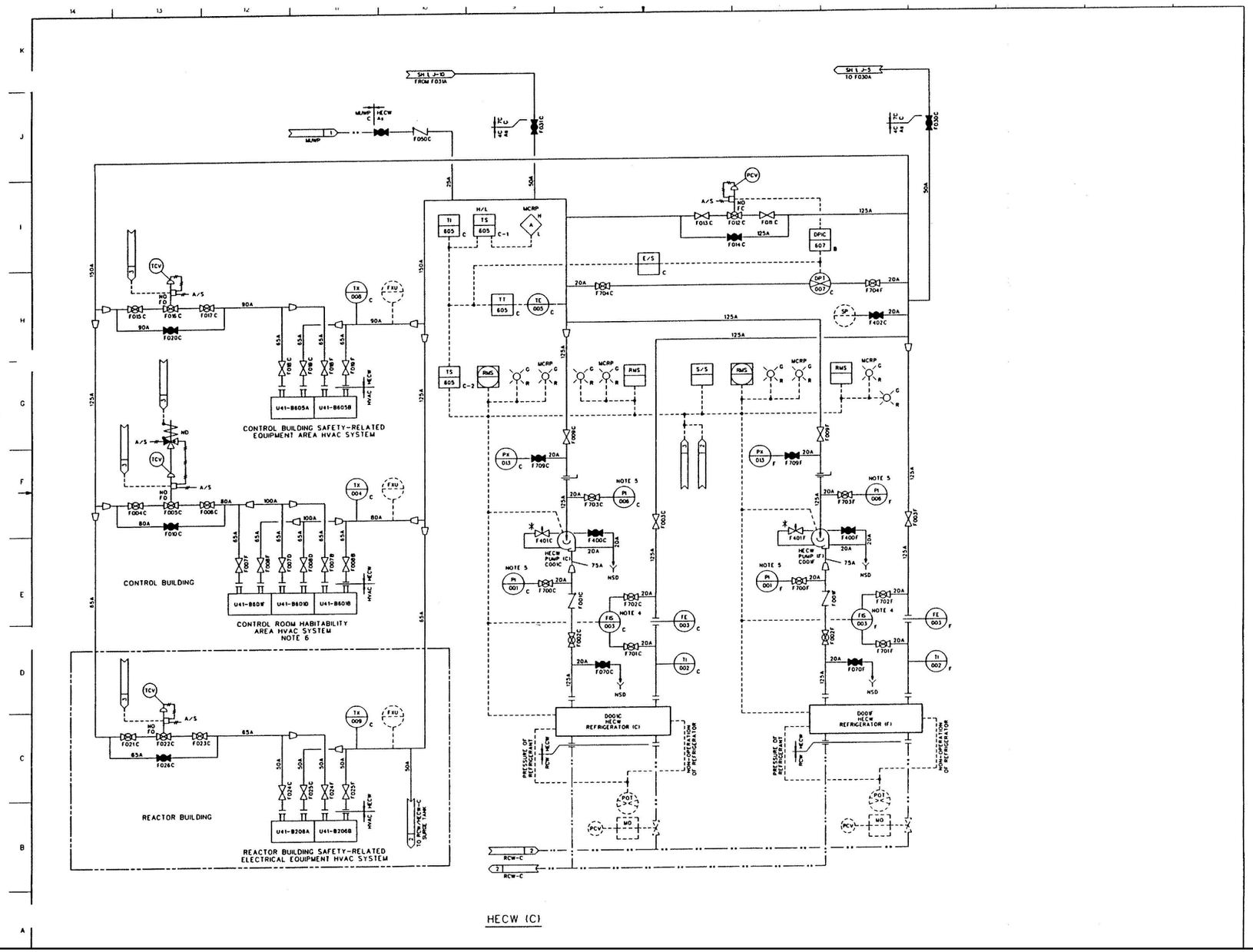

Figure 9.2-3 HVAC Emergency Cooling Water System P&ID (Sheet 3 of 3)

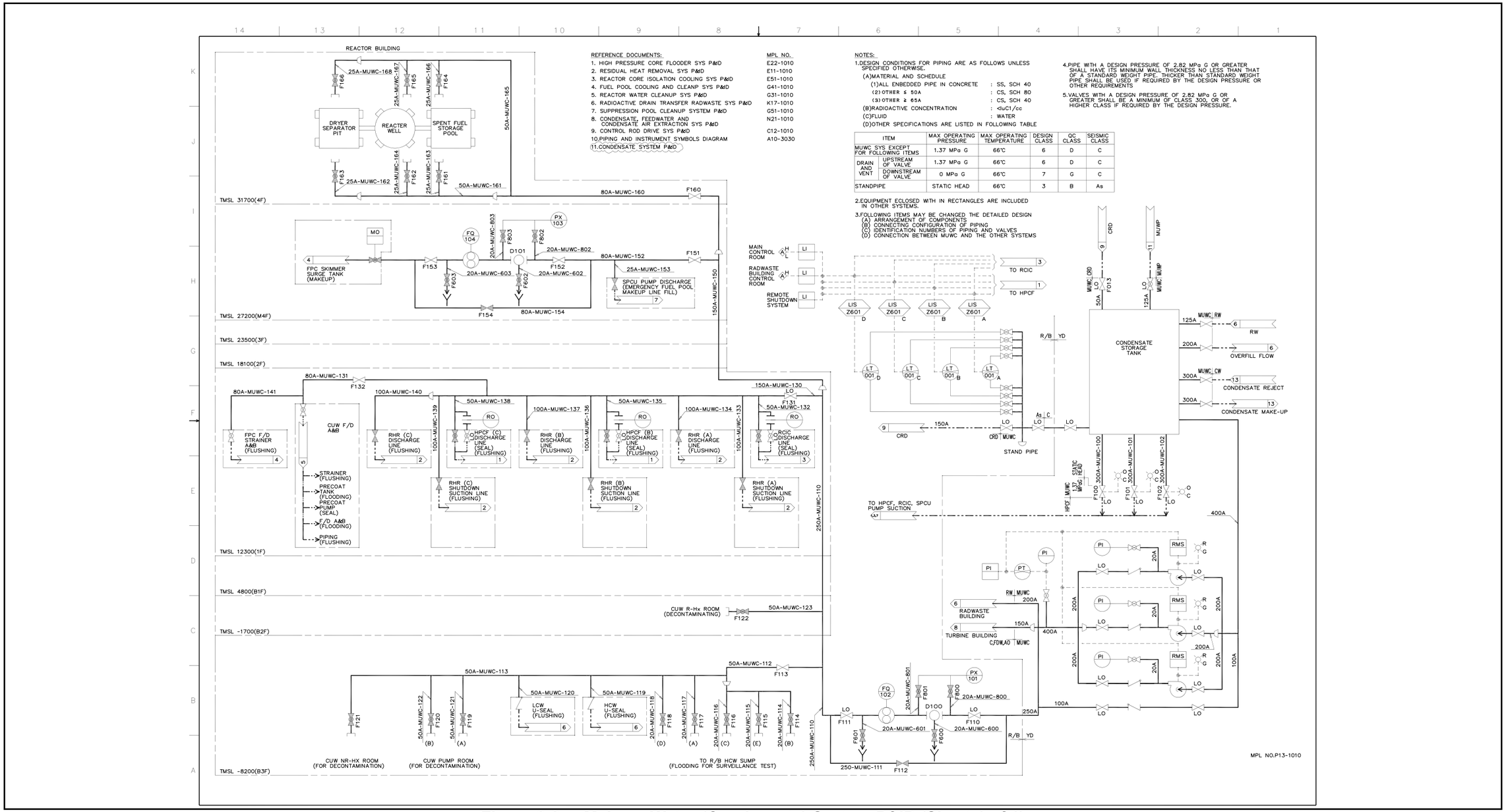

ITEM		MAX OPERATING PRESSURE	MAX OPERATING TEMPERATURE	DESIGN CLASS	QC CLASS	SEISMIC CLASS
MUWC SYS EXCEPT FOR FOLLOWING ITEMS		1.37 MPa G	66℃	6	D	C
DRAIN AND VENT	UPSTREAM OF VALVE	1.37 MPa G	66℃	6	D	C
	DOWNSTREAM OF VALVE	0 MPa G	66℃	7	G	C
STANDPIPE		STATIC HEAD	66℃	3	B	As

Figure 9.2-4 Makeup Water (Condensate) System P&ID (Sheet 1 of 1)

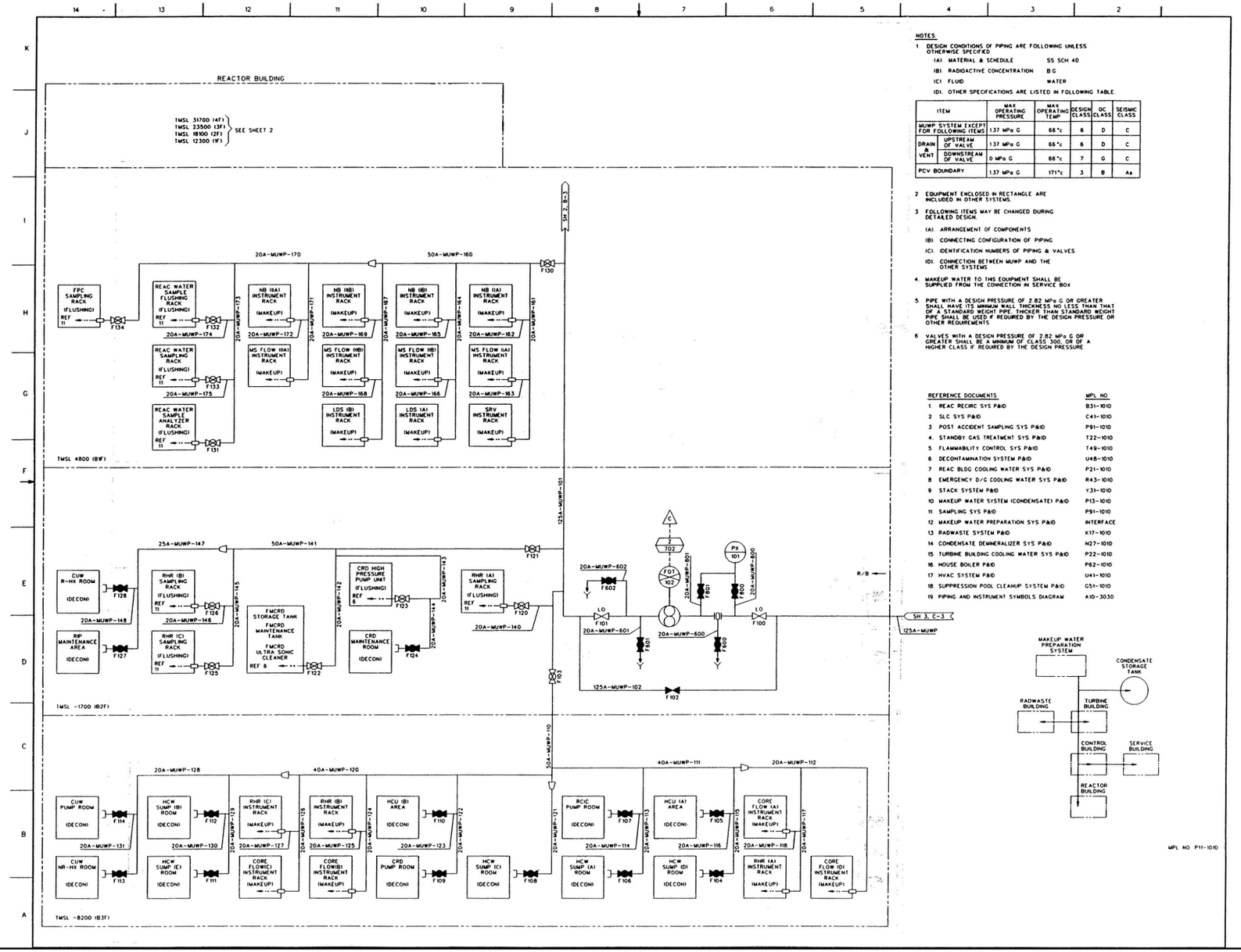

NOTES:

1. DESIGN CONDITIONS OF PIPING ARE FOLLOWING UNLESS OTHERWISE SPECIFIED
   - (A). MATERIAL & SCHEDULE — SS SCH 40
   - (B). RADIOACTIVE CONCENTRATION — B G
   - (C). FLUID — WATER
   - (D). OTHER SPECIFICATIONS ARE LISTED IN FOLLOWING TABLE.

ITEM		MAX OPERATING PRESSURE	MAX OPERATING TEMP	DESIGN CLASS	QC CLASS	SEISMIC CLASS
MUWP SYSTEM EXCEPT FOR FOLLOWING ITEMS		1.37 MPa G	66°c	6	D	C
DRAIN & VENT	UPSTREAM OF VALVE	1.37 MPa G	66°c	6	D	C
	DOWNSTREAM OF VALVE	0 MPa G	66°c	7	G	C
PCV BOUNDARY		1.37 MPa G	171°c	3	B	As

2. EQUIPMENT ENCLOSED IN RECTANGLE ARE INCLUDED IN OTHER SYSTEMS.
3. FOLLOWING ITEMS MAY BE CHANGED DURING DETAILED DESIGN.
   - (A). ARRANGEMENT OF COMPONENTS
   - (B). CONNECTING CONFIGURATION OF PIPING
   - (C). IDENTIFICATION NUMBERS OF PIPING & VALVES
   - (D). CONNECTION BETWEEN MUWP AND THE OTHER SYSTEMS
4. MAKEUP WATER TO THIS EQUIPMENT SHALL BE SUPPLIED FROM THE CONNECTION IN SERVICE BOX.
5. PIPE WITH A DESIGN PRESSURE OF 2.82 MPa G OR GREATER SHALL HAVE ITS MINIMUM WALL THICKNESS NO LESS THAN THAT OF A STANDARD WEIGHT PIPE. THICKER THAN STANDARD WEIGHT PIPE SHALL BE USED IF REQUIRED BY THE DESIGN PRESSURE OR OTHER REQUIREMENTS
6. VALVES WITH A DESIGN PRESSURE OF 2.82 MPa G OR GREATER SHALL BE A MINIMUM OF CLASS 300, OR OF A HIGHER CLASS IF REQUIRED BY THE DESIGN PRESSURE

REFERENCE DOCUMENTS	MPL NO
1. REAC RECIRC SYS P&ID	B31-1010
2. SLC SYS P&ID	C41-1010
3. POST ACCIDENT SAMPLING SYS P&ID	P91-1010
4. STANDBY GAS TREATMENT SYS P&ID	T22-1010
5. FLAMMABILITY CONTROL SYS P&ID	T49-1010
6. DECONTAMINATION SYSTEM P&ID	U48-1010
7. REAC BLDG COOLING WATER SYS P&ID	P21-1010
8. EMERGENCY D/G COOLING WATER SYS P&ID	R43-1010
9. STACK SYSTEM P&ID	Y31-1010
10. MAKEUP WATER SYSTEM (CONDENSATE) P&ID	P13-1010
11. SAMPLING SYS P&ID	P91-1010
12. MAKEUP WATER PREPARATION SYS P&ID	INTERFACE
13. RADWASTE SYSTEM P&ID	K17-1010
14. CONDENSATE DEMINERALIZER SYS P&ID	N27-1010
15. TURBINE BUILDING COOLING WATER SYS P&ID	P22-1010
16. HOUSE BOILER P&ID	P62-1010
17. HVAC SYSTEM P&ID	U41-1010
18. SUPPRESSION POOL CLEANUP SYSTEM P&ID	G51-1010
19. PIPING AND INSTRUMENT SYMBOLS DIAGRAM	A10-3030

Figure 9.2-5 Makeup Water (Purified) System P&ID (Sheet 1 of 3)

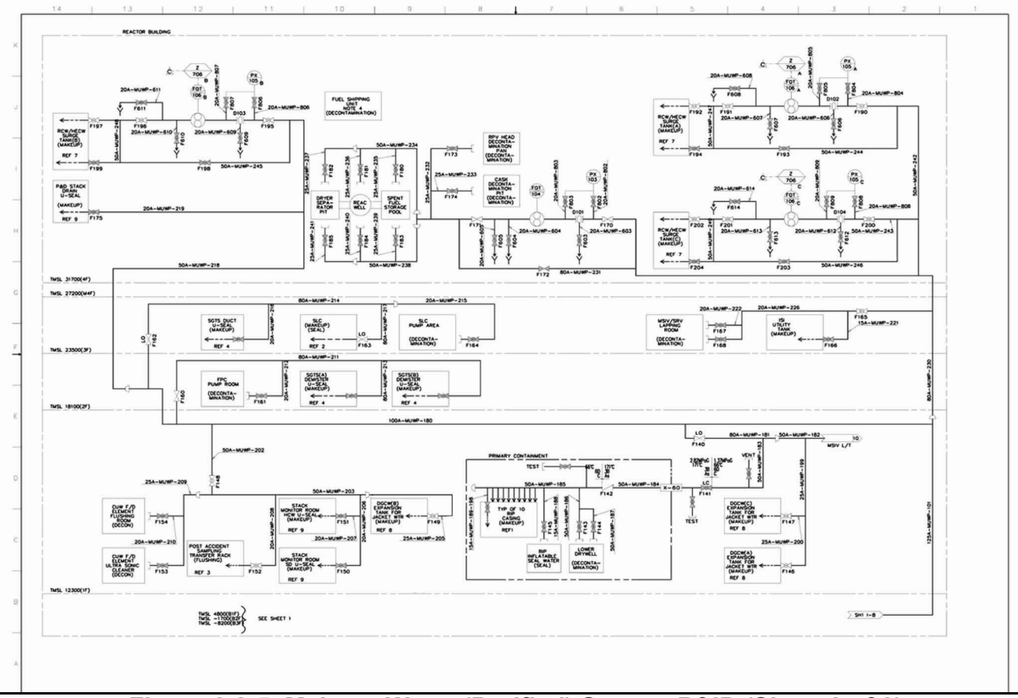

Figure 9.2-5 Makeup Water (Purified) System P&ID (Sheet 2 of 3)

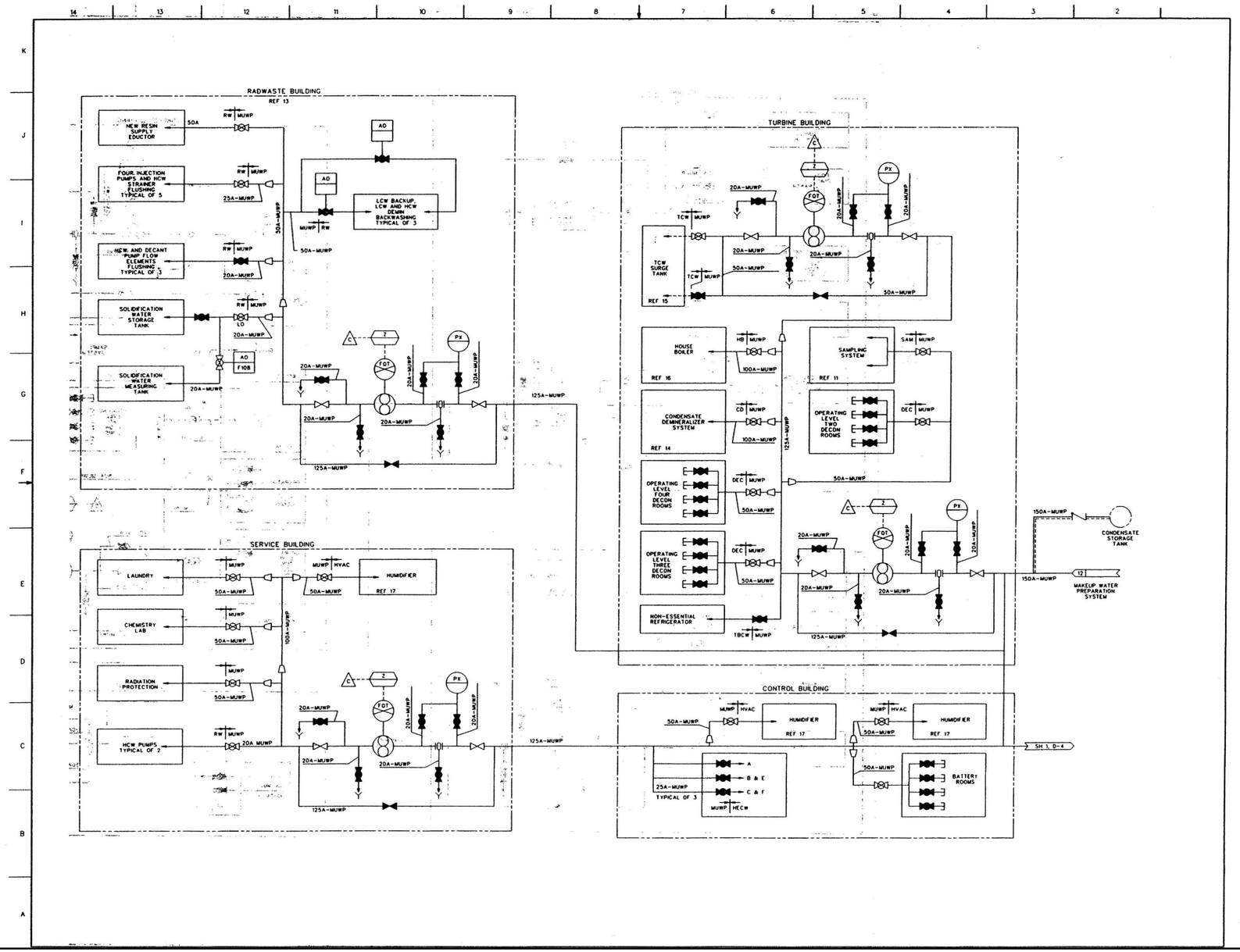

Figure 9.2-5 Makeup Water (Purified) System P&ID (Sheet 3 of 3)