NOTES:

1. LOCAL CONTROL ALLOWS THE OPERATOR TO EITHER MANUALLY MANIPULATE DEMAND SIGNALS OR PLACE THEM IN AUTOMATIC CONTROL AT MANUAL/AUTO STATIONS. POWER GENERATION CONTROL SYSTEM(PGC) CONTROL ALLOWS THE COMPUTER TO DIRECTLY MANIPULATE DEMAND SIGNALS AT THE M/A STATION OR PLACE THEM IN AUTOMATIC CONTROL.
2. MULTIPLE TRANSMITTER SIGNAL INPUTS FOR SIMILAR PROCESS SIGNALS ARE, IN GENERAL, COMBINED INTO SINGLE SIGNALS WITHIN EACH DMC CHANNEL BY THE SIGNAL VALIDATION ALGORITHMS. IN THE CASE OF FLOW RATES IN PARALLEL FLOW PATHS (SUCH AS INDIVIDUAL STEAM LINE FLOWS), THIS INVOLVES SUMMING THE FLOWS TO OBTAIN TOTAL FLOW. IN THE CASE OF REDUNDANT TRANSMITTER SIGNALS (SUCH AS REACTOR WATER LEVEL), THIS INVOLVES DETERMINATION OF A SINGLE VALID VALUE FOR THE PARAMETER. IN THIS DOCUMENT, THE COMBINED SINGLE VALIDATED SIGNAL IS SHOWN IN GENERAL. ONE EXCEPTION IS THE REACTOR WATER LEVEL SIGNALS USED FOR ATWS MITIGATION LEVEL 3 SIGNAL ISSUED TO THE RFCS SYSTEM (RPT). IN THIS CASE, ALL THREE LEVEL TRIP SIGNALS MUST BE SENT TO RFCS, AND RFCS COMBINES THE TRIP SIGNALS FOR THE ATWS RPT LOGIC. THEREFORE, ALL THREE LEVEL TRANSMITTER SIGNALS ARE SHOWN IN THE LOGIC DEPICTION.
3. THE TOUCH SCREEN BUTTON (TSB) SENDS A HIGH SIGNAL FOR AT LEAST ONE COMPLETE SAMPLING PERIOD.
4. THE STATUS INDICATOR (W) IS DISPLAYED ON FDWC DEDICATED SOFTWARE FACED DISPLAY.
5. LOGIC FOR ONE CHANNEL, TYPICAL OF ALL THREE CHANNELS, IS SHOWN FOR REFERENCE PURPOSES ONLY, ANNUNCIATORS AND COMPUTER POINT SYMBOLS ARE SHOWN HERE. THESE OUTPUTS ARE ACTUALLY IMPLEMENTED BY VOTERS AS SHOWN IN REFERENCE C31–1010.
6. DELETED
7. TRIP FUNCTION SHOWN WITHIN DASH LINES ARE PERFORMED BY INDEPENDENT MICROPROCESSOR NUMBER 2. ALL OTHER FUNCTIONS ARE PERFORMED BY MICROPROCESSOR NUMBER 1.
8. LOGIC FOR ATWS FEEDWATER RUNBACK SHOWN WITHIN DASHED LINES IS PERFORMED BY SAFTY SYSTEM LOGIC AND CONTROL (SSLC). LOGIC IS FOR SSLC DIV I AND TYPICAL FOR DIVISIONS II, III AND IV.

TABLE OF CONTENTS

SH	TITLE
1	NOTES,REFERENCE DOCUMENTS
2	FEEDWATER CONTROL SYSTEM INTERLOCKS
3	FEEDWATER CONTROL SYSTEM INTERLOCKS, MODE SELECTION LOGIC
4	RFP A INTERLOCKS AND CONTROLLER INTIALIZATION
5	RFP B INTERLOCKS AND CONTROLLER INTIALIZATION
6	RFP C INTERLOCKS AND CONTROLLER INTIALIZATION
6a	RFP D INTERLOCKS AND CONTROLLER INTIALIZATION
7	RFP A MANUAL/AUTO STATION LOGIC
8	RFP B MANUAL/AUTO STATION LOGIC
9	RFP C MANUAL/AUTO STATION LOGIC
9a	RFP D MANUAL/AUTO STATION LOGIC
10	LFCV MANUAL/AUTO STATION LOGIC
11	DUMP VALVE FLOW CONTROL MANUAL/AUTO STATION LOGIC
12	CUW DUMP VALVE LEVEL CONTROL MANUAL/AUTO STATION SETPOINT CHANGE LOGIC
13	GAIN CHANGE LOGIC
14	ACTUATOR LOCKUP LOGIC, LOCKUP RINGBACK LOGIC, DMC CONTROLLER FAILURE
14	LOSS OF FEEDWATER HEATING LOGIC

SUPPLEMENTAL DOCUMENTS UNDER THE FOLLOWING IDENTITIES ARE TO BE USED IN CONJUNCTION WITH THIS DRAWING.

		REFERENCE DESIGNATOR
1.	FEEDWATER CONTROL SYSTEM, IED	C31–1010
2.	RECIRCULATION FLOW CONTROL SYSTEM, IED	C81–1010
3.	CONDENSATE, FEEDWATER & CONDENSATE AIR EXTRACTION SYSTEM, P&ID	N21–1010
4.	CONDENSATE, FEEDWATER & CONDENSATE AIR EXTRACTION SYSTEM, IBD	N21–1030
5.	REACTOR WATER CLEANUP SYSTEM, P&ID	G31–1010
6.	REACTOR WATER CLEANUP SYSTEM, IBD	G31–1030
7.	NUCLEAR BOILER SYSTEM, P&ID	B21–1010
8.	NUCLEAR BOILER SYSTEM, IBD	B21–1030
9.	PLANT COMPUTER FUNCTIONS, IED	C91–1010
10.	RECIRCULATION FLOW CONTROL SYSTEM, IBD	C81–1030
11.	MAIN CONTROL ROOM PANEL, ARGMT	H11–4050
12.	TURBINE CONTROL SYSTEM, IED	N32–1010
13.	TURBINE CONTROL SYSTEM, IBD	N32–1030
14.	NEUTRON MONITORING SYSTEM, IED	C51–1010

MPL NO C31–1030

Figure 7.7-9 Feedwater Control System IBD (Sheet 1 of 14)

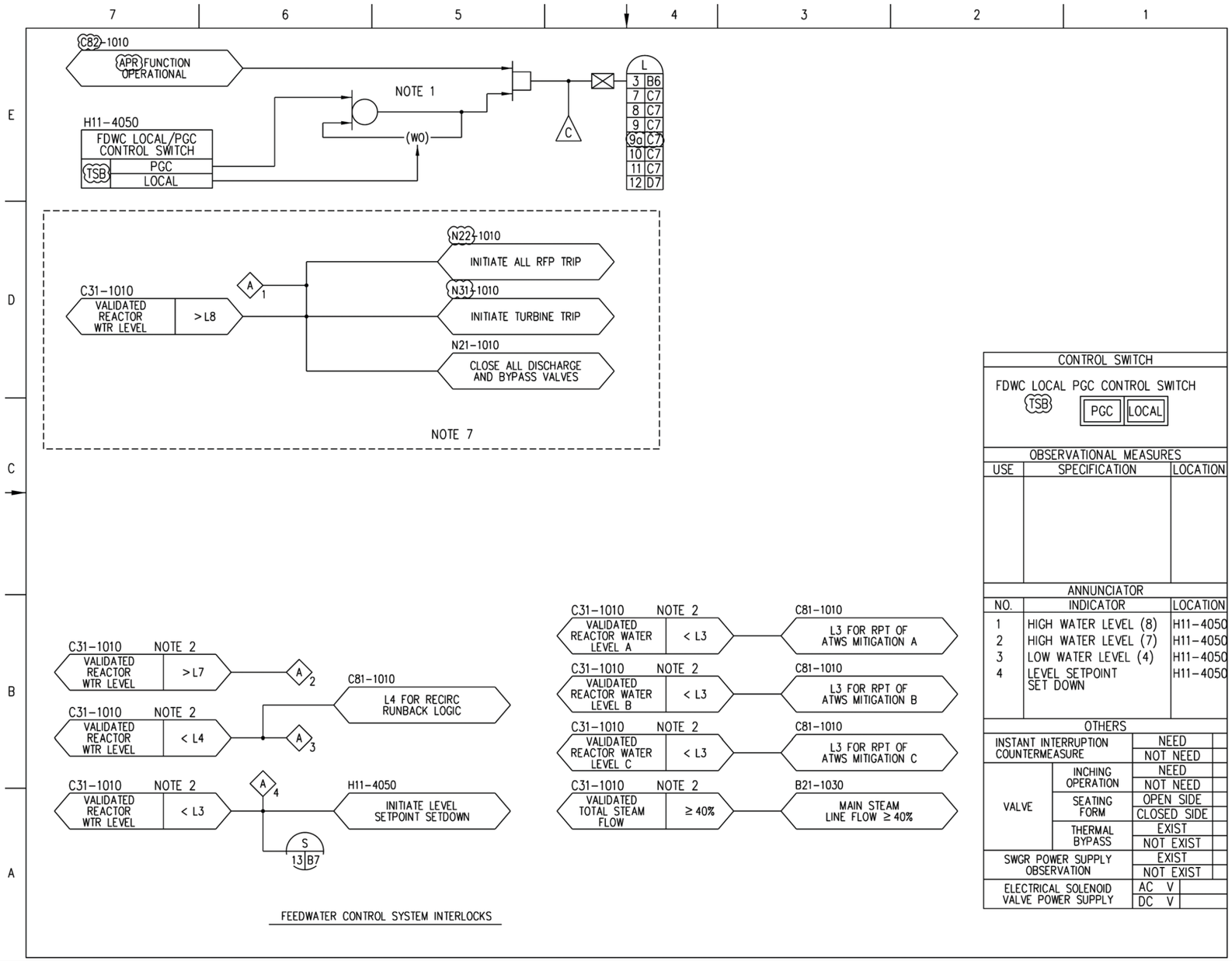

Figure 7.7-9 Feedwater Control System IBD (Sheet 2 of 14)

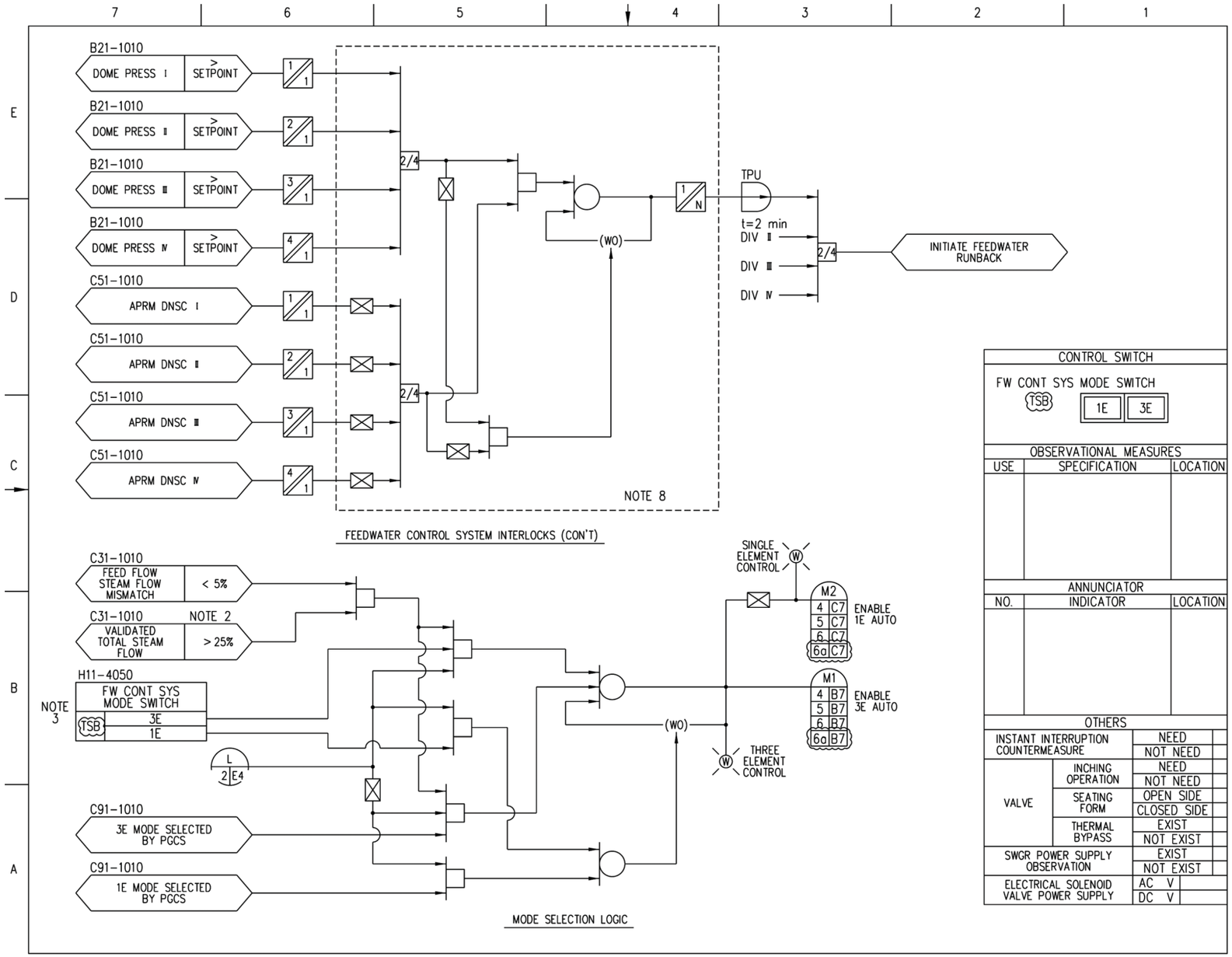

Figure 7.7-9 Feedwater Control System IBD (Sheet 3 of 14)

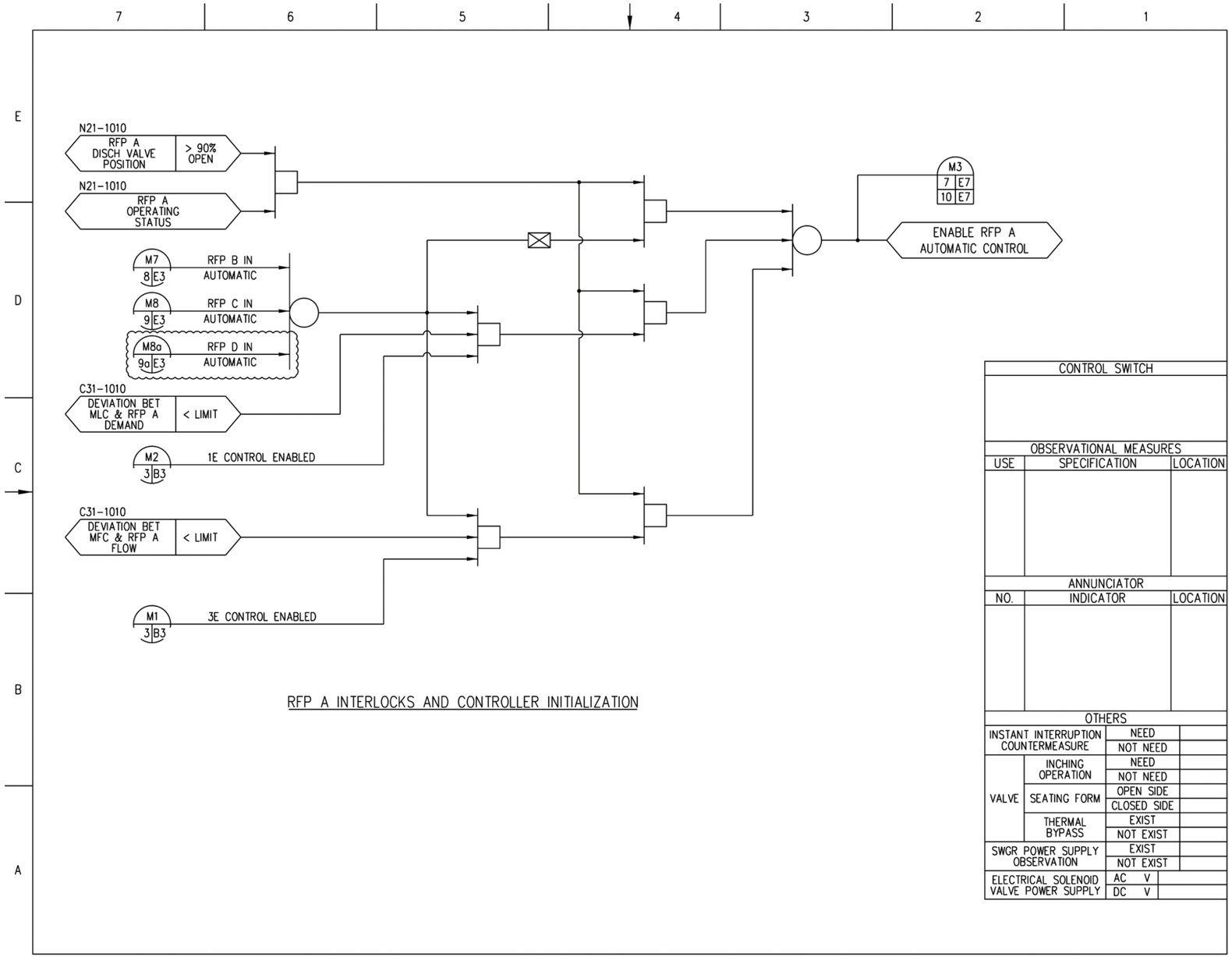

Figure 7.7-9 Feedwater Control System IBD (Sheet 4 of 14)

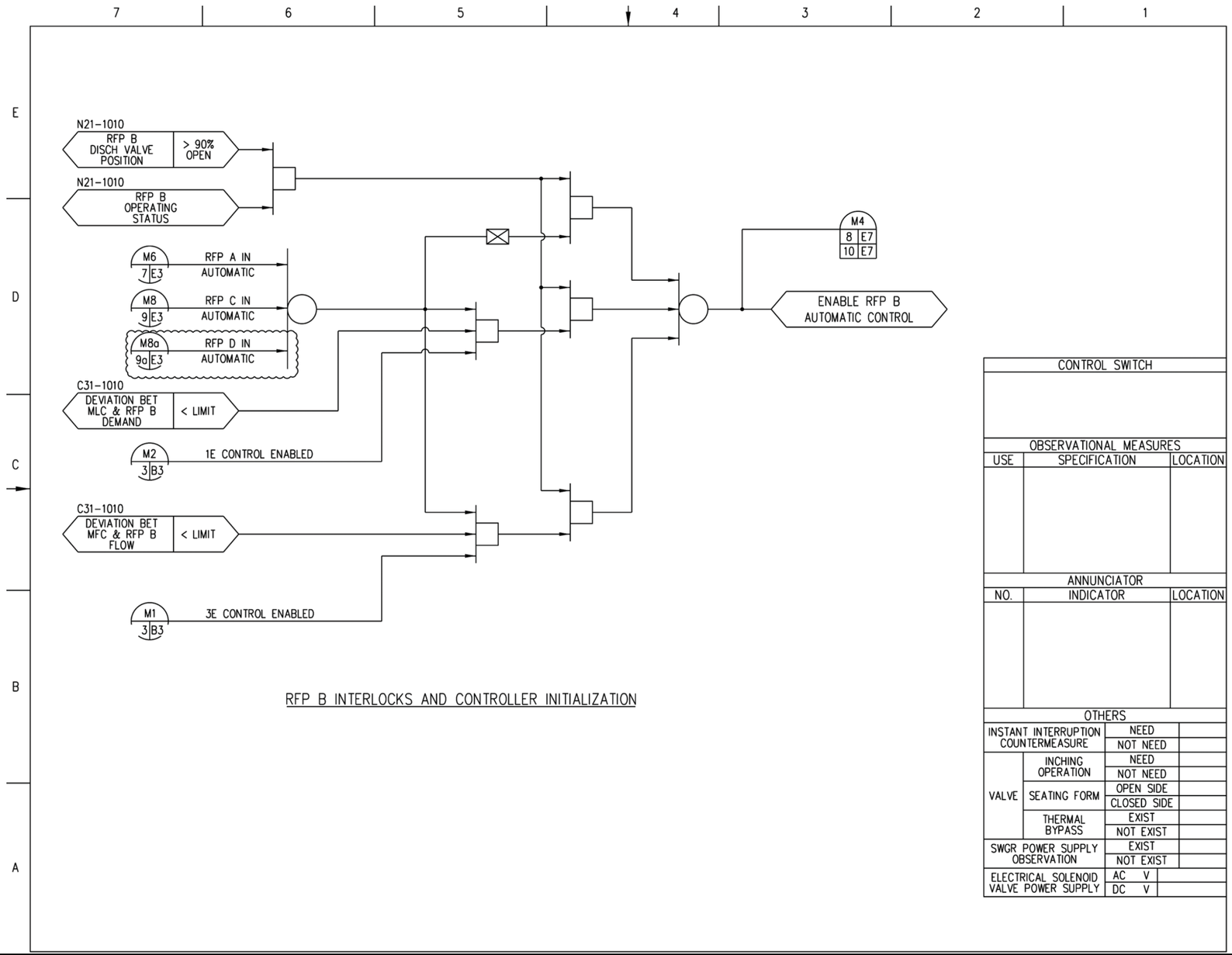

Figure 7.7-9 Feedwater Control System IBD (Sheet 5 of 14)

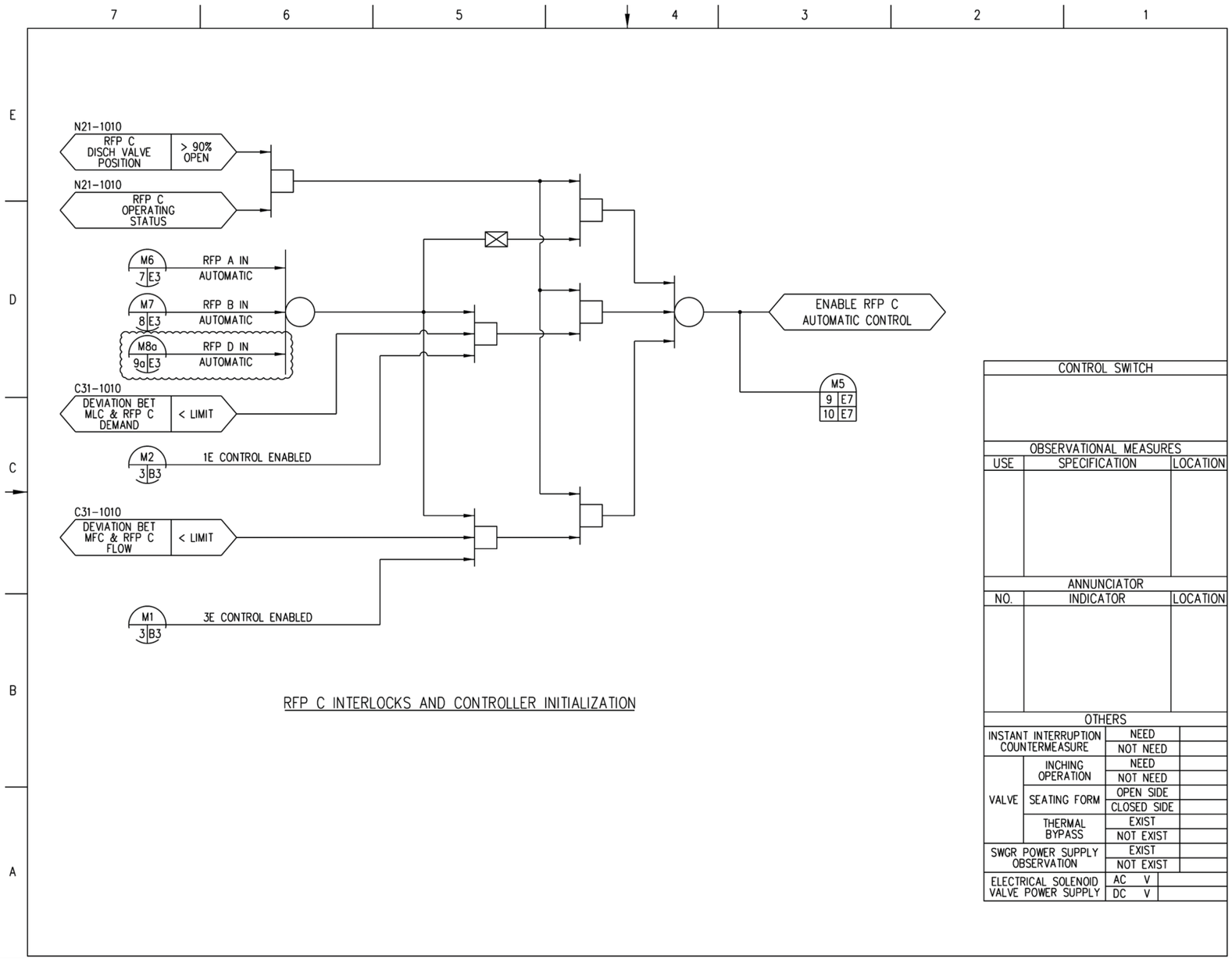

Figure 7.7-9 Feedwater Control System IBD (Sheet 6 of 14)

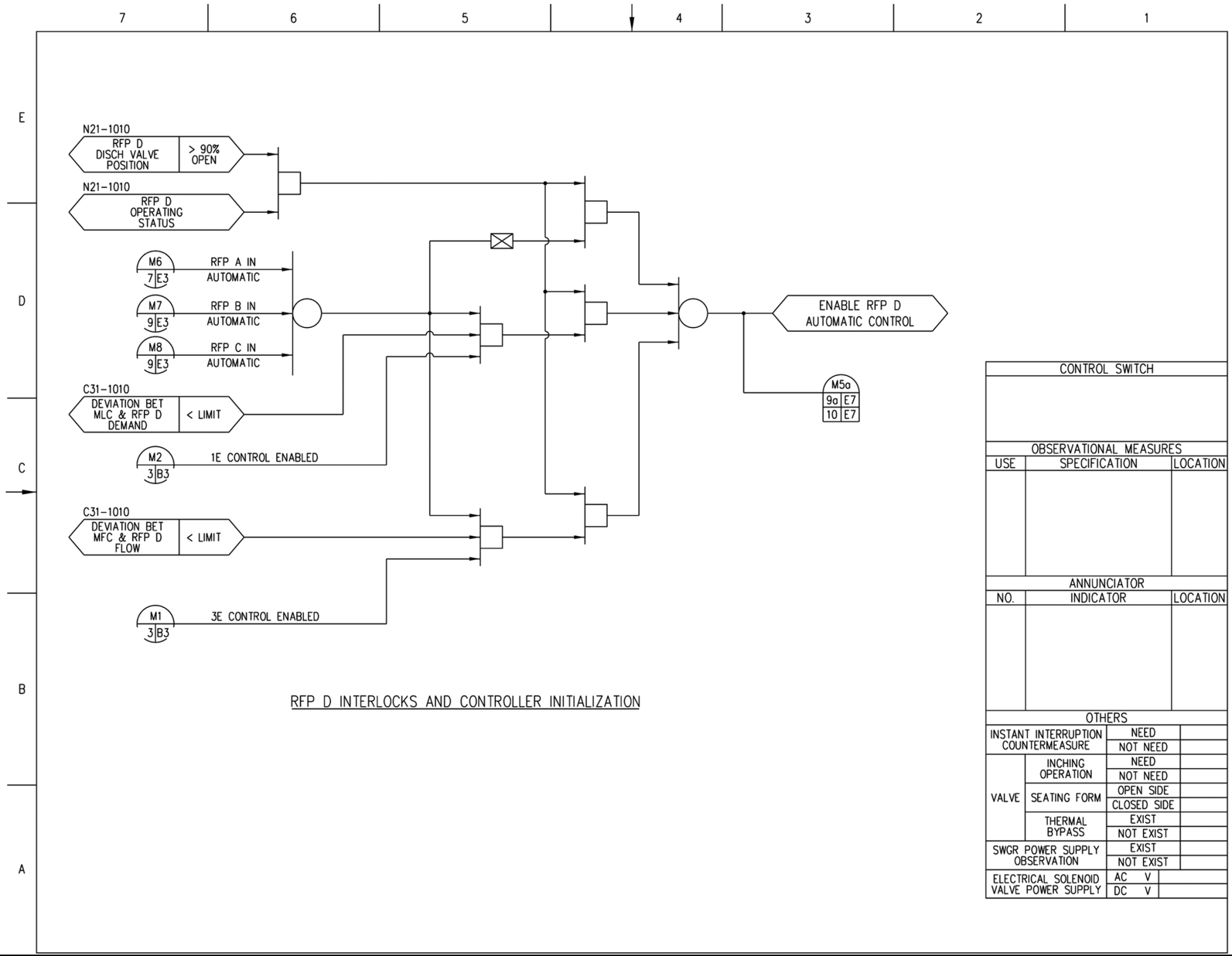

Figure 7.7-9 Feedwater Control System IBD (Sheet 6a of 14)

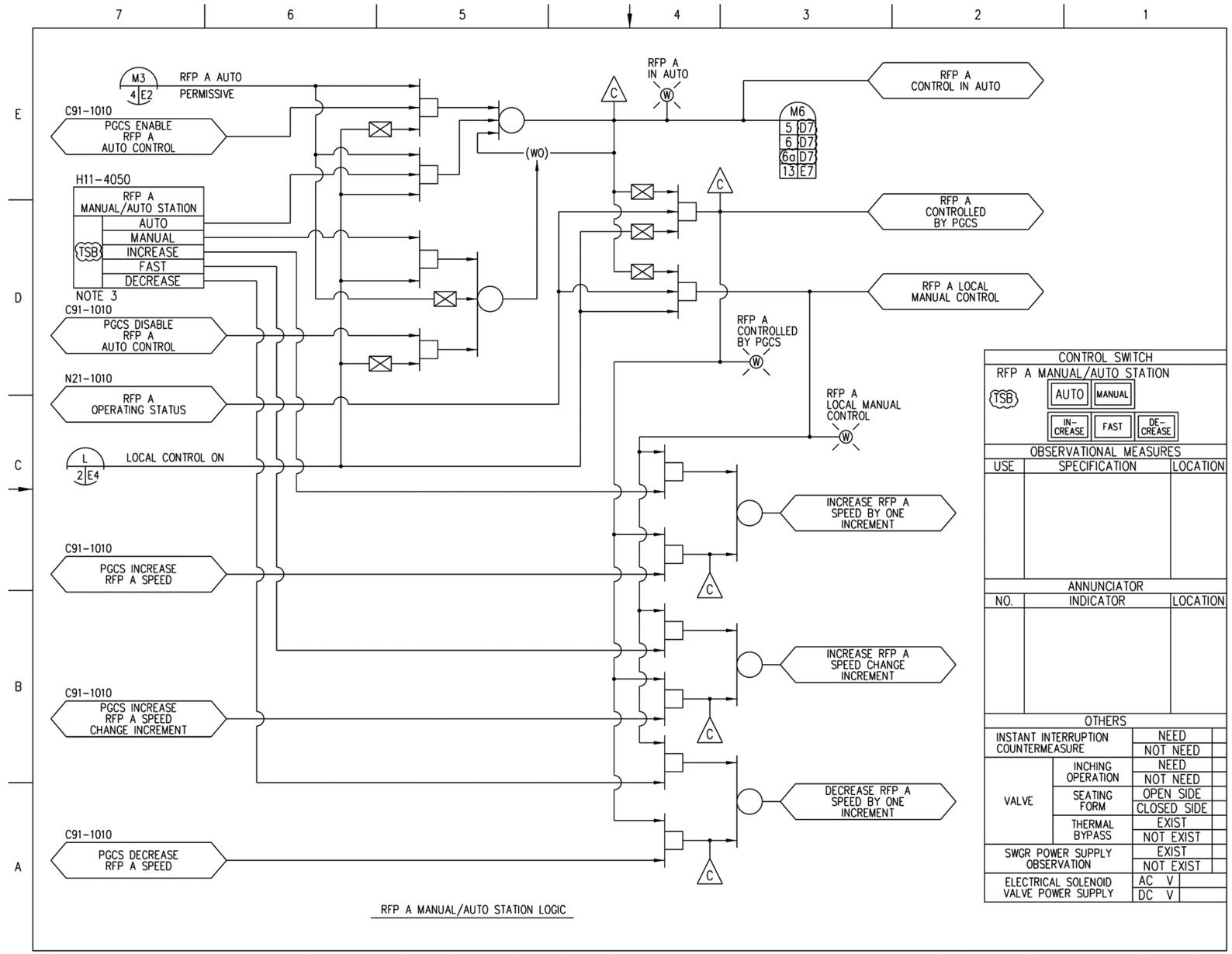

Figure 7.7-9 Feedwater Control System IBD (Sheet 7 of 14)

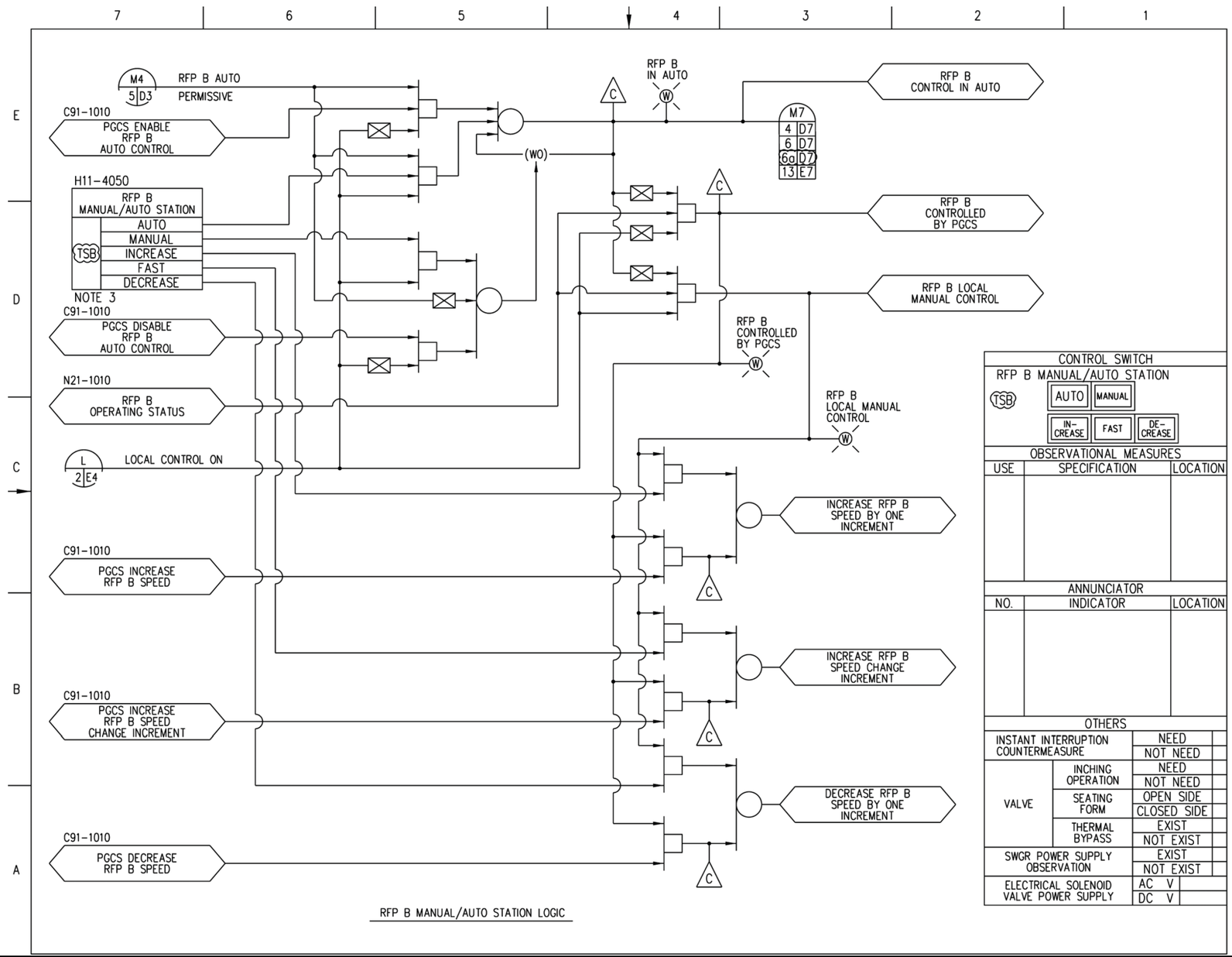

Figure 7.7-9 Feedwater Control System IBD (Sheet 8 of 14)

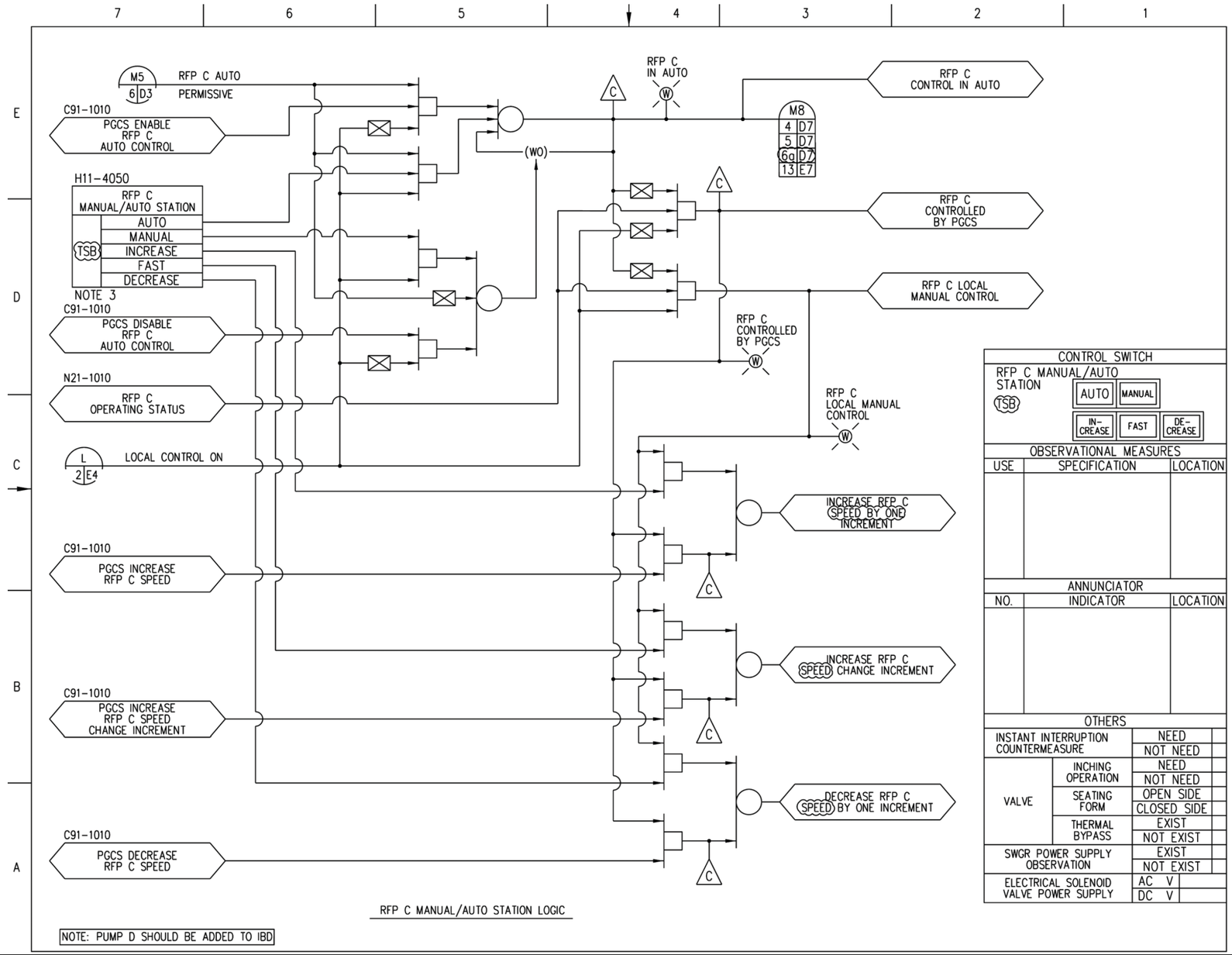

Figure 7.7-9 Feedwater Control System IBD (Sheet 9 of 14)

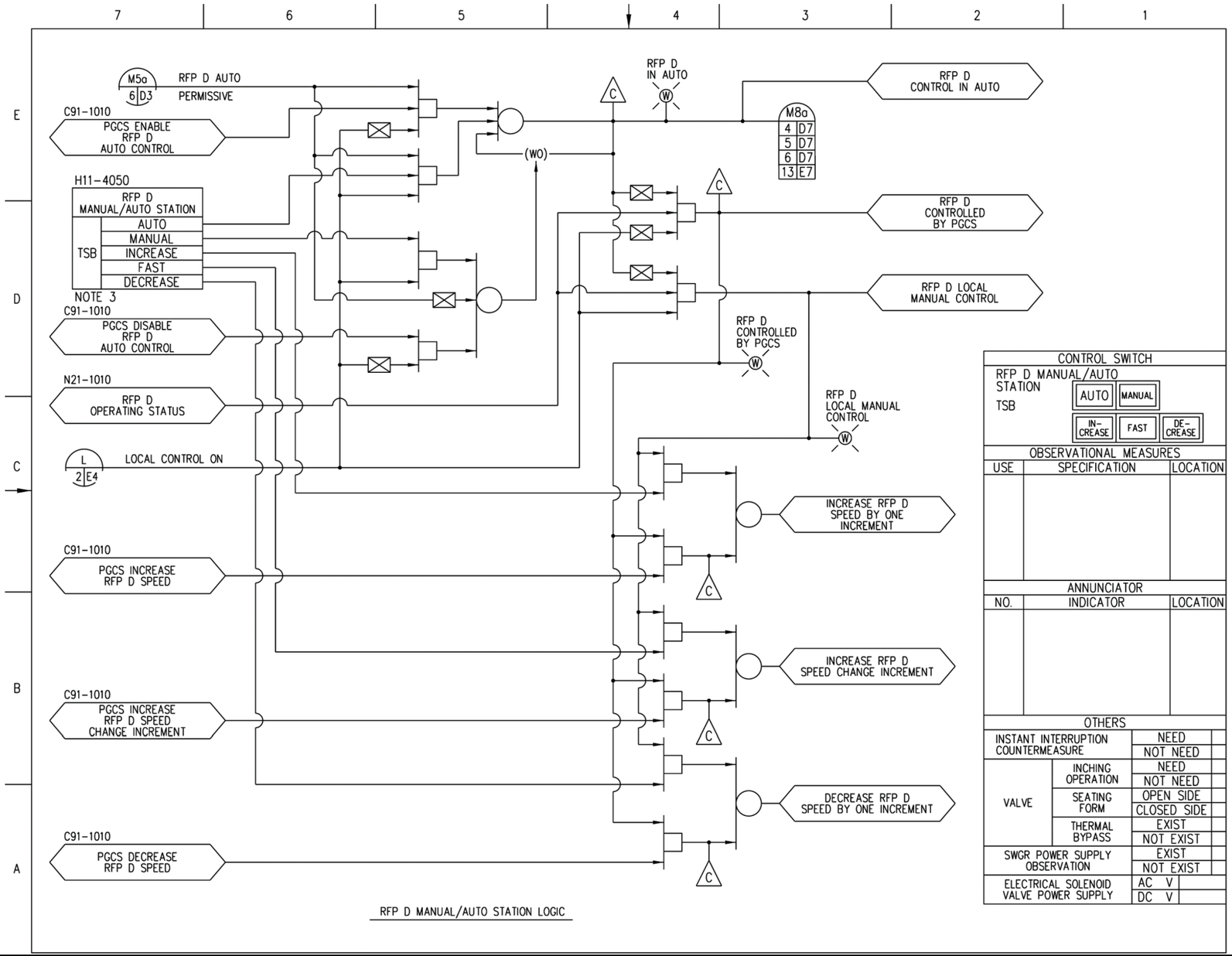

Figure 7.7-9 Feedwater Control System IBD (Sheet 9a of 14)

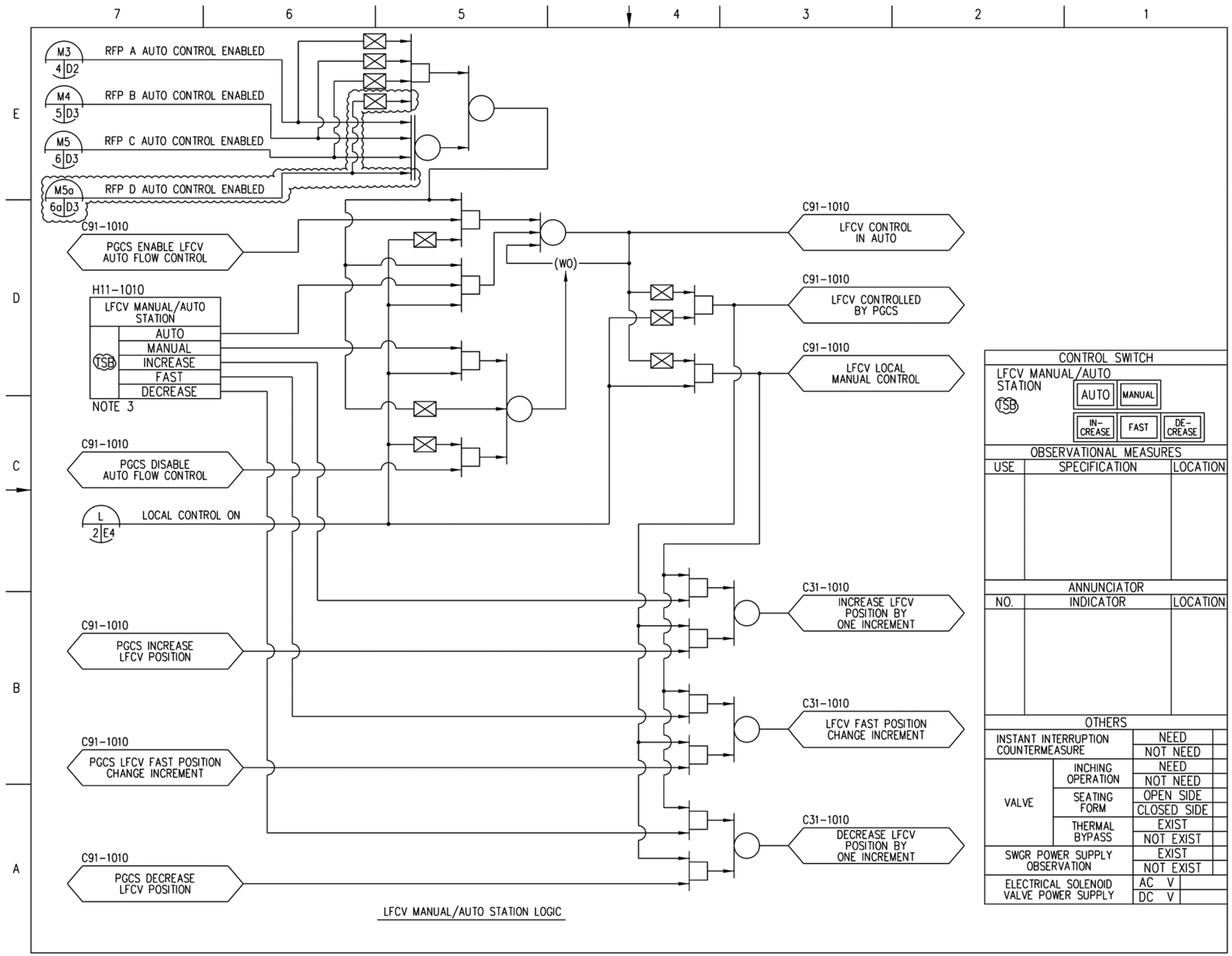

Figure 7.7-9 Feedwater Control System IBD (Sheet 10 of 14)

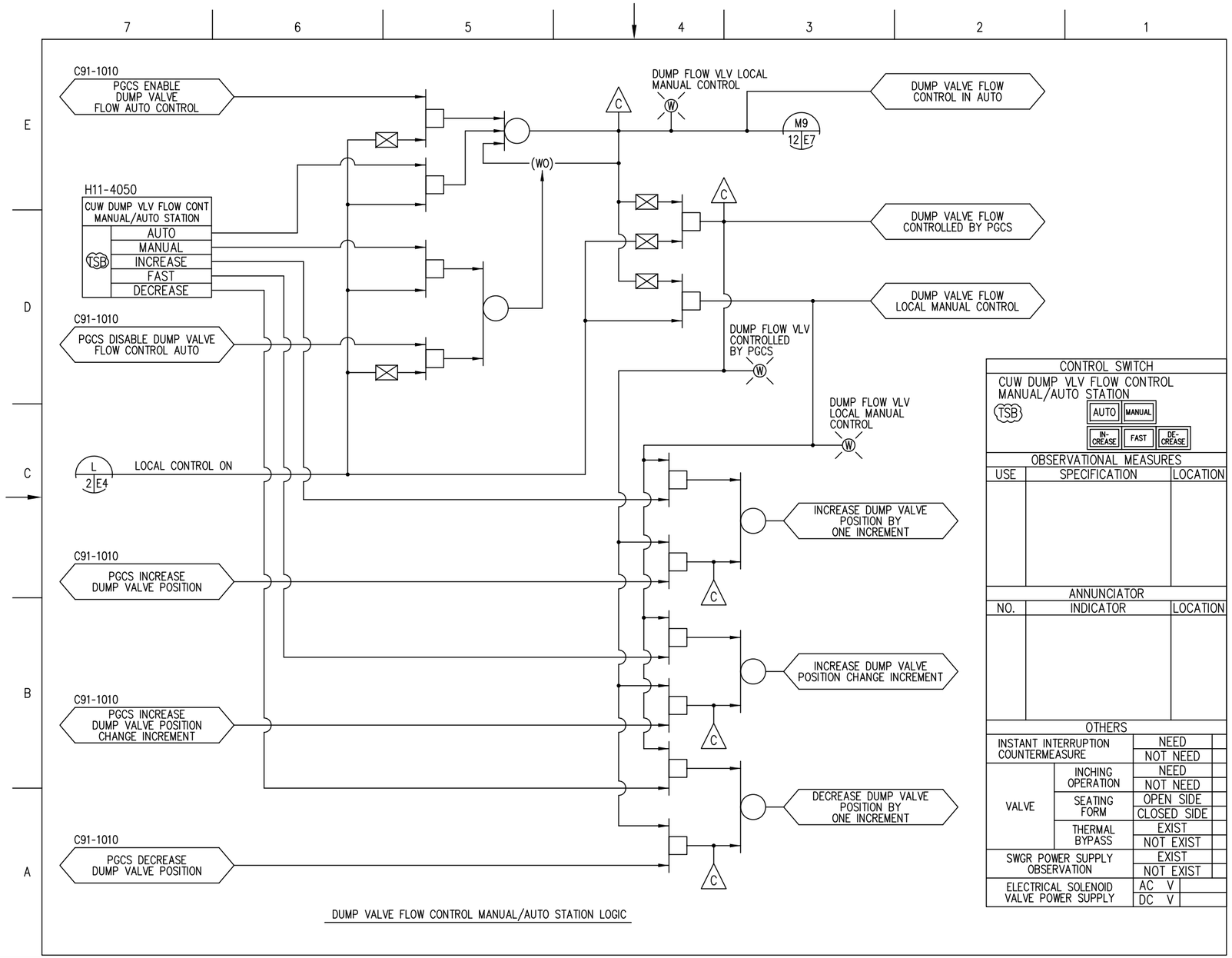

Figure 7.7-9 Feedwater Control System IBD (Sheet 11 of 14)

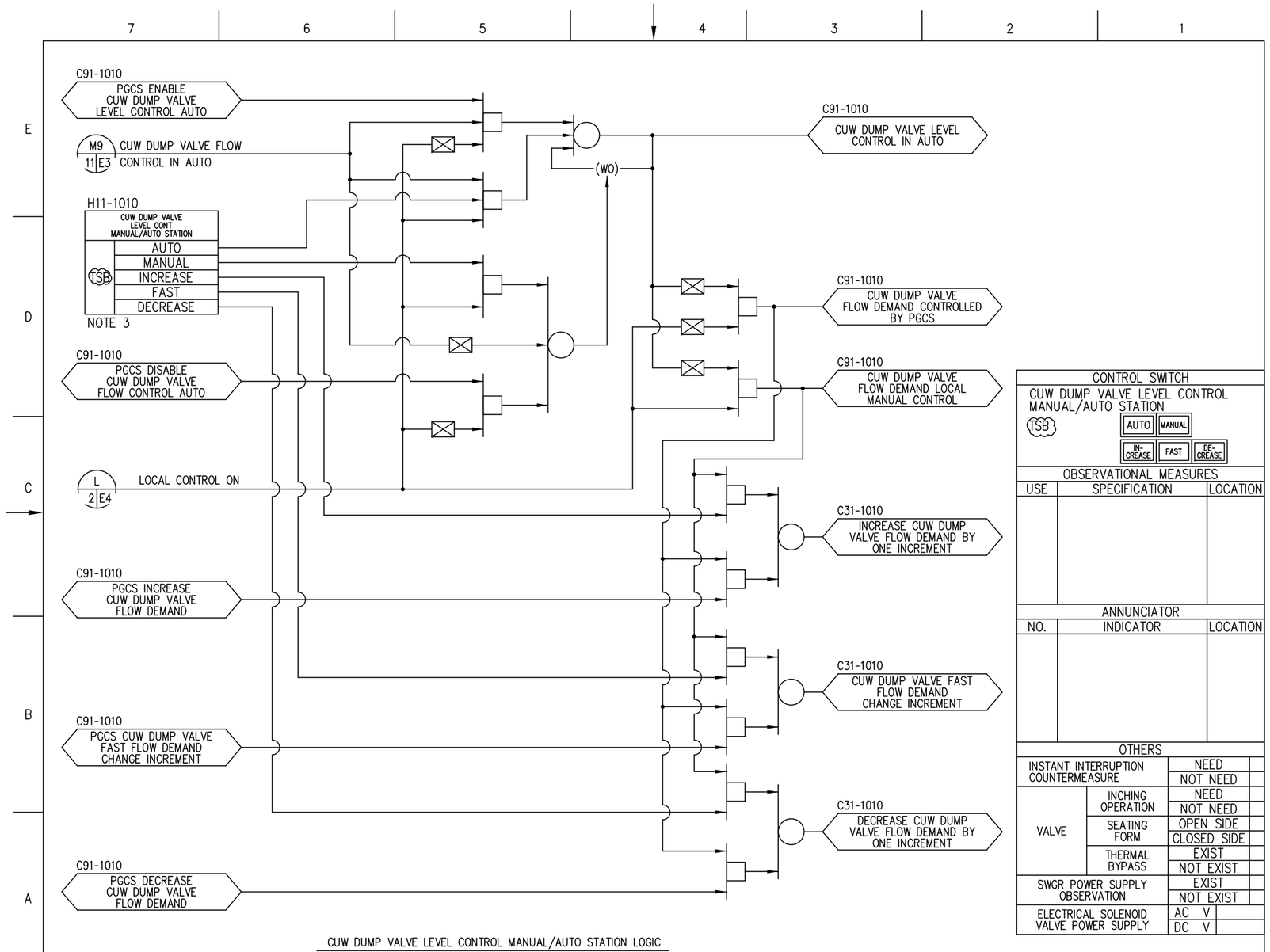

Figure 7.7-9 Feedwater Control System IBD (Sheet 12 of 14)

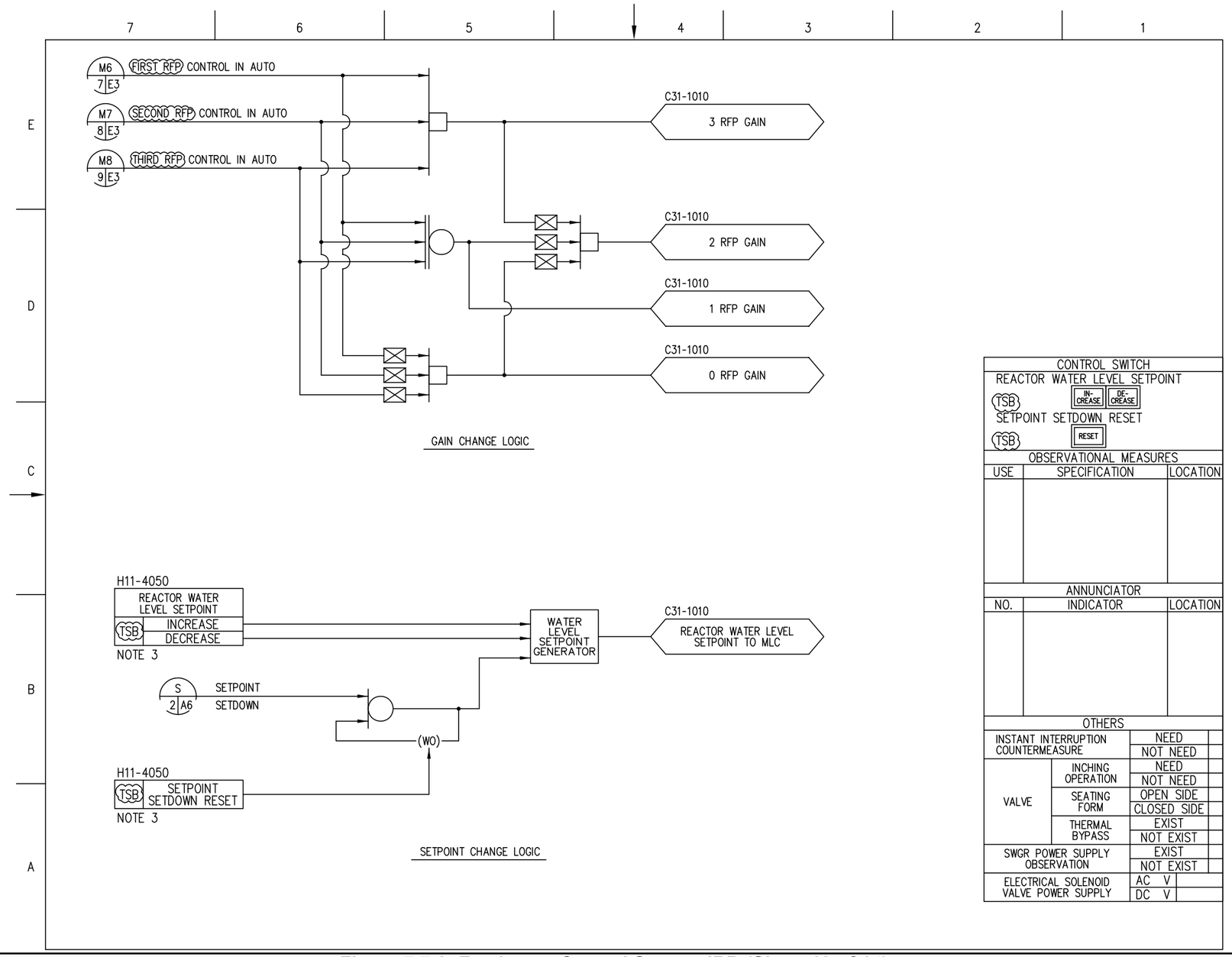

Figure 7.7-9 Feedwater Control System IBD (Sheet 13 of 14)

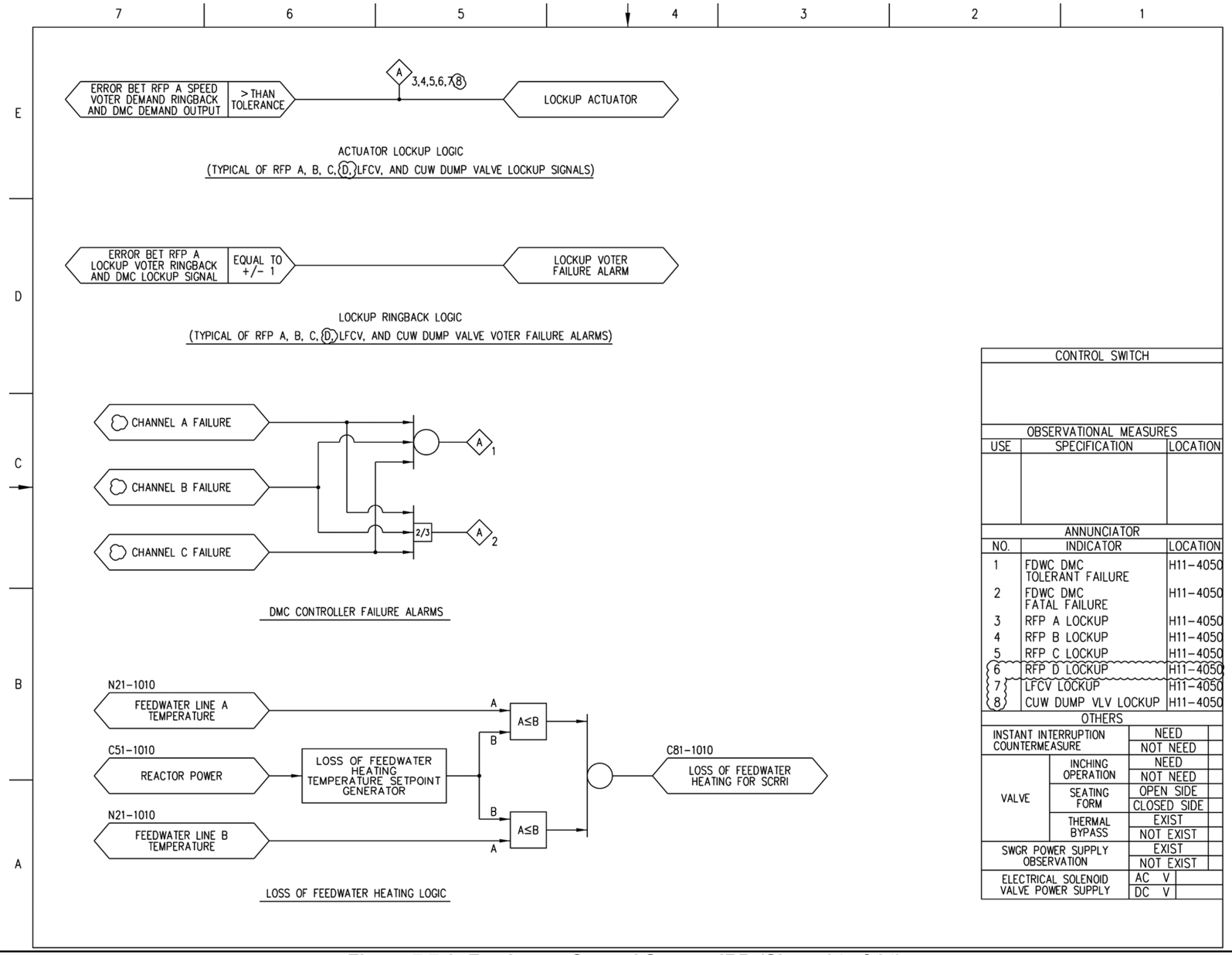

Figure 7.7-9 Feedwater Control System IBD (Sheet 14 of 14)

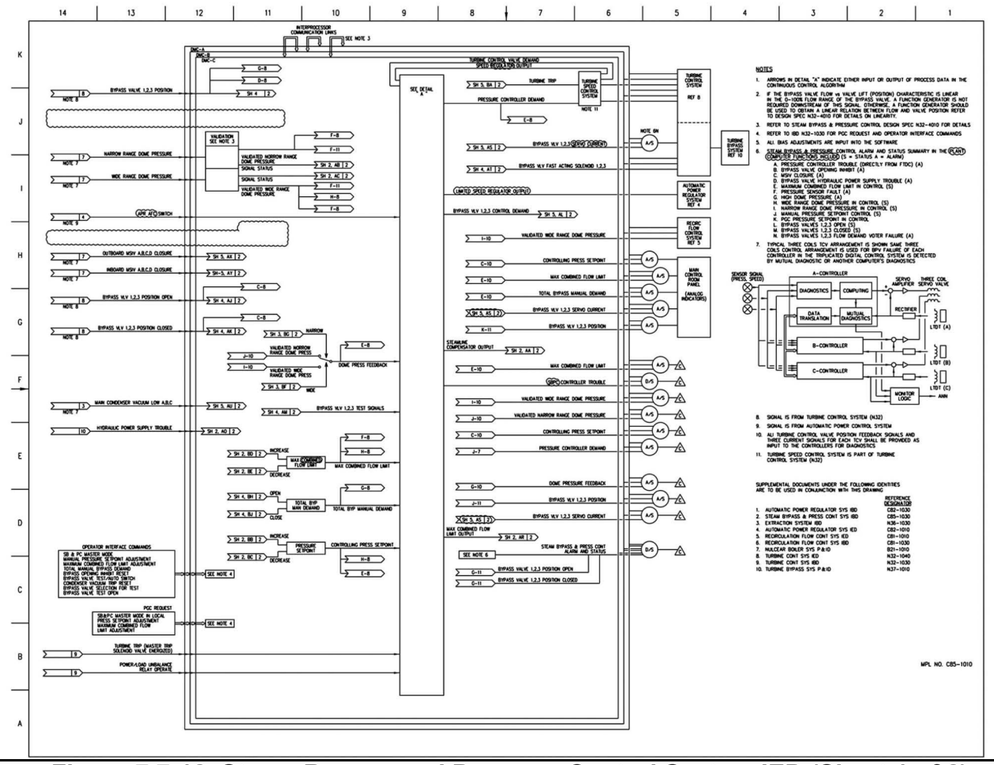

Figure 7.7-12 Steam Bypass and Pressure Control System IED (Sheet 1 of 2)

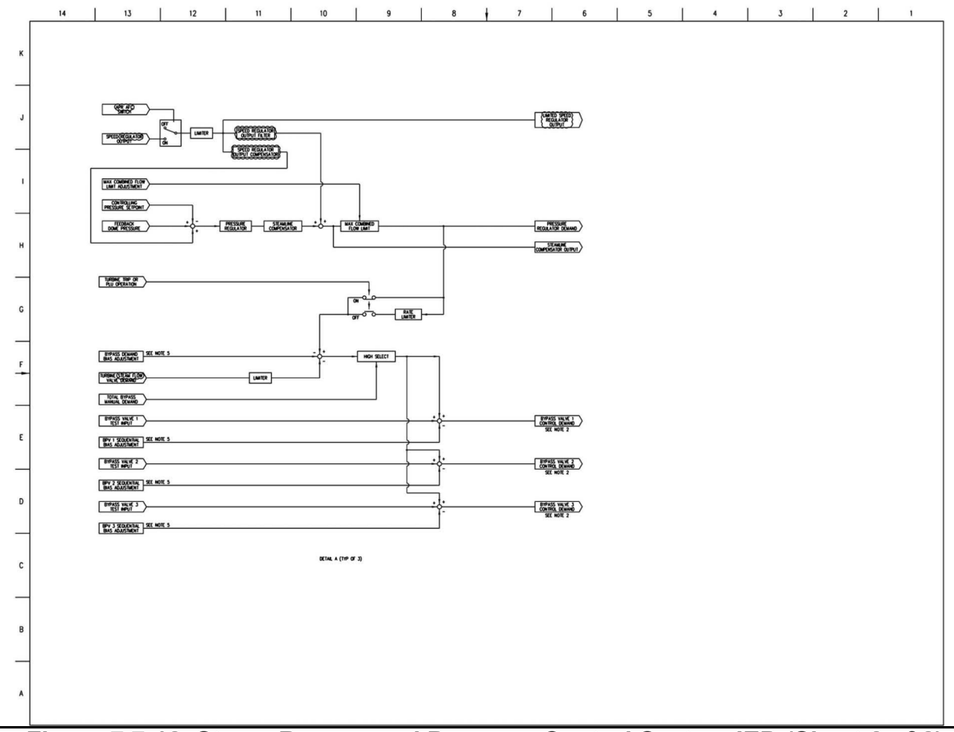

Figure 7.7-12 Steam Bypass and Pressure Control System IED (Sheet 2 of 2)

NOTES:

1. DELAY TIME IS TO BE DETERMINED BASED ON MSIV CLOSING TIME CHARACTERISTICS. REFER TO N32-4010 FOR RECOMMENDATION.
2. FOR THE SIGNAL SOURCE CHARACTERISTICS, REFER TO SB & PC DESIGN SPECIFICATION, N32-4010.
3. COMPLETION OF THE COLUMN OF THE OPERATING CONTROLS AND SUPERVISORY INSTRUMENTS ARE PENDING FOR THE DETAIL DESIGN.
4. EACH BPV POSITION FEEDBACK SIGNAL IS PROVIDED TO EACH CONTROLLER. A COMPARATOR TO INITIATE THE BPV POSITION ERROR "LARGE" SIGNAL IS INCLUDED IN EACH CONTROLLER. THEREFORE, THREE (3) BPV POSITION ERROR "LARGE" SIGNALS PER EACH BPV ARE PROVIDED TO TURBINE CONTROL SYSTEM. AFTER 2 OUT OF 3 LOGIC, EACH BPV FAST ACTING SOLENOID SHALL BE ENERGIZED. IF ONE OF THE THREE CONTROLLERS OR THREE COILS PER EACH BPV FAILS, THEN THE COMPARATOR SHALL INITIATE THE BPV POSITION ERROR "LARGE" SIGNAL BECAUSE OF AVOIDANCE FOR NO BPV AT TURBINE TRIP OR LOAD REJECTION.

SUPPLEMENTAL DOCUMENTS UNDER THE FOLLOWING IDENTITIES ARE TO BE USED IN CONJUNCTION WITH THIS DRAWING.

		REFERENCE DESIGNATOR
1.	STEAM BYPASS & PRESS CONTROL SYS IED	C85-1010
2.	RECIRCULATION FLOW CONT SYS IED	C81-1010
3.	RECIRCULATION FLOW CONT SYS IBD	C81-1030
4.	NUCLEAR BOILER SYS P&ID	B21-1010
5.	TURBINE CONTROL SYSTEM IED	N32-1010
6.	TURBINE CONTROL SYSTEM IBD	N32-1030
7.	TURBINE BYPASS SYS IED	N37-1010
8.	MAIN CONDENSER SYSTEM IBD	N61-1030

TABLE OF CONTENTS

SH NO	NAME
1	NOTES, REFERENCE DOCUMENTS, CONTENTS
2	PRESSURE CONTROL LOGIC (1/2)
3	PRESSURE CONTROL LOGIC (2/2)
4	BYPASS VALVE CONTROL LOGIC (1/2)
5	BYPASS VALVE CONTROL LOGIC (2/2)

MPL NO C85-1030

Figure 7.7-13 Steam Bypass and Pressure Control System IBD (Sheet 1 of 5)

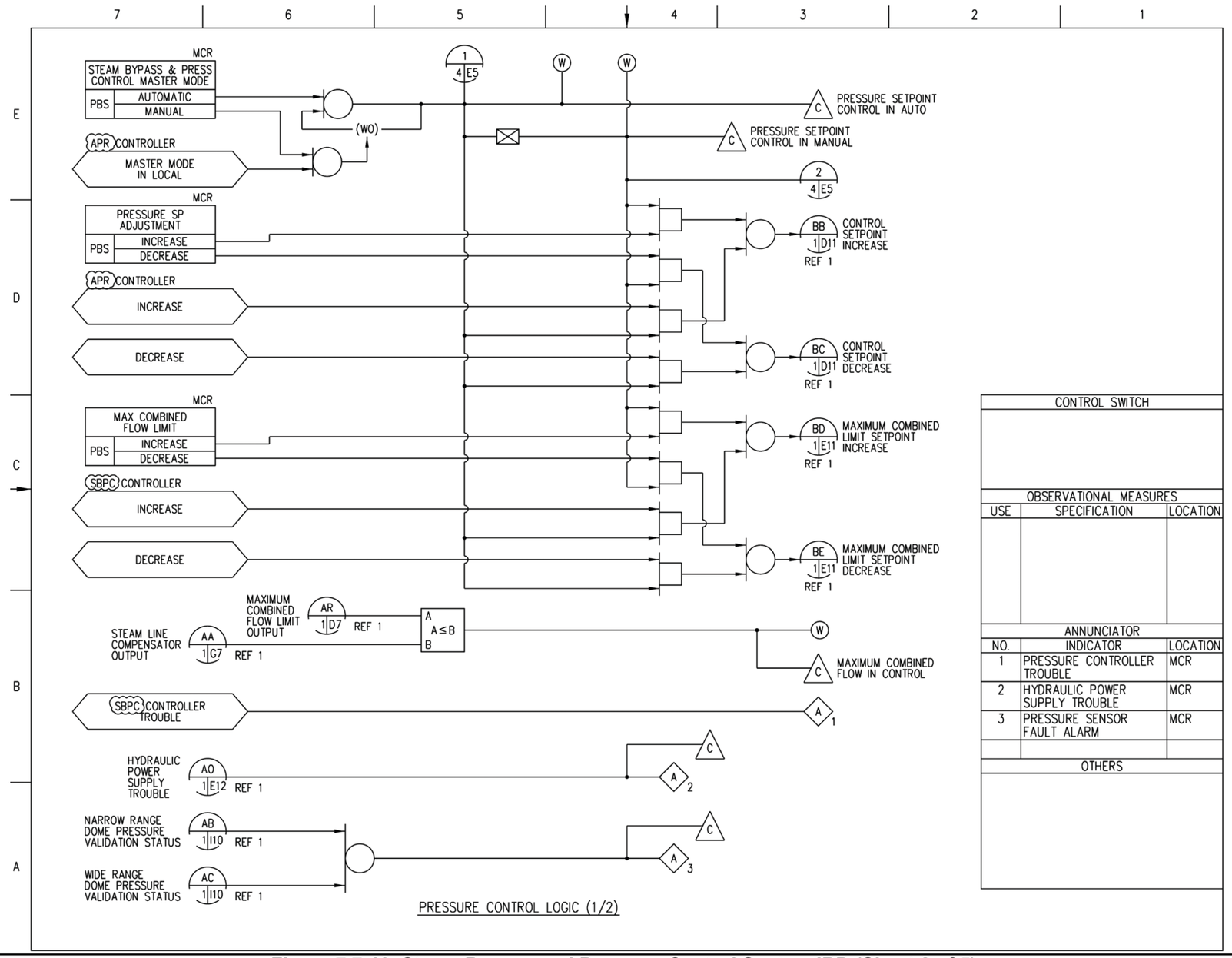

Figure 7.7-13 Steam Bypass and Pressure Control System IBD (Sheet 2 of 5)

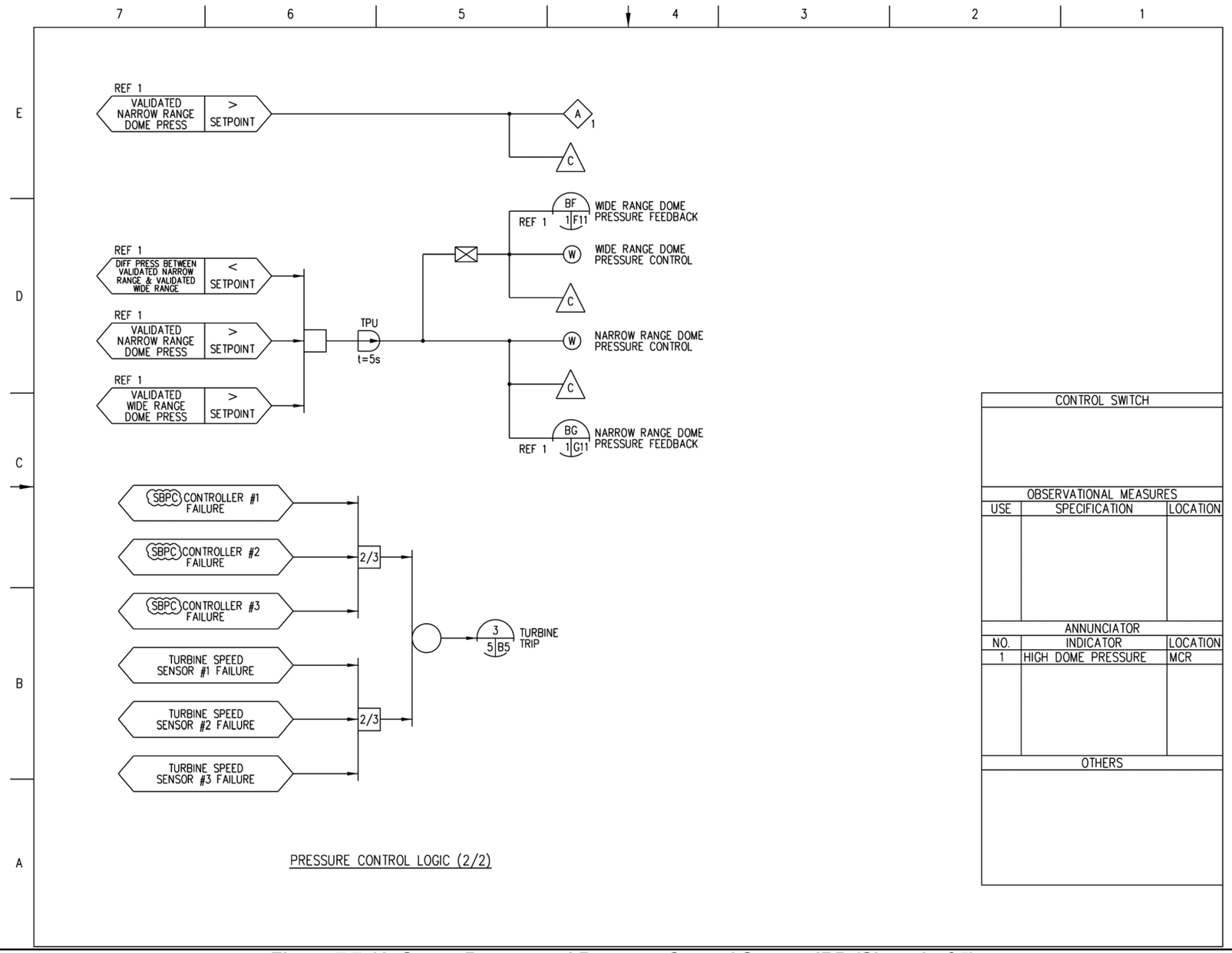

Figure 7.7-13 Steam Bypass and Pressure Control System IBD (Sheet 3 of 5)

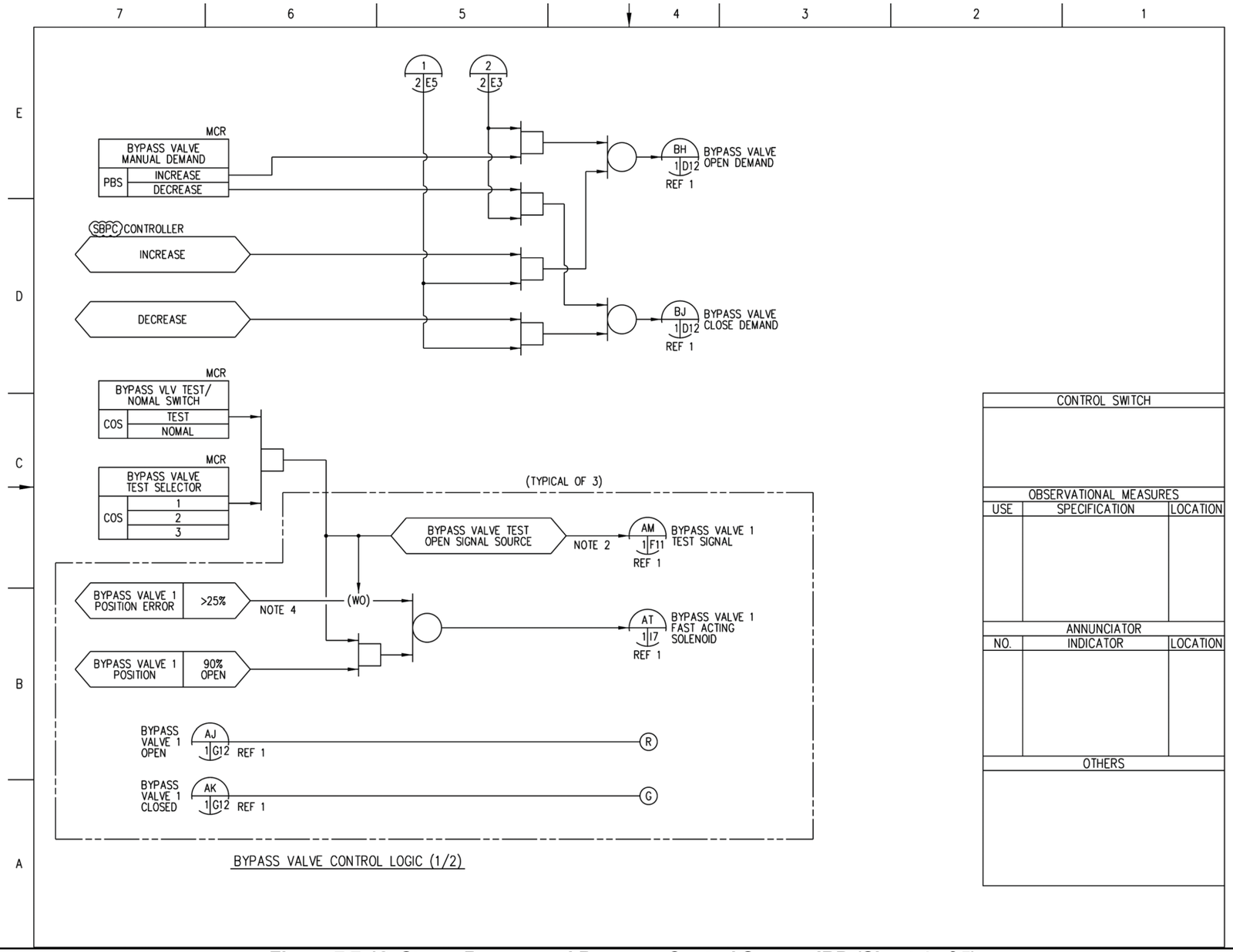

Figure 7.7-13 Steam Bypass and Pressure Control System IBD (Sheet 4 of 5)

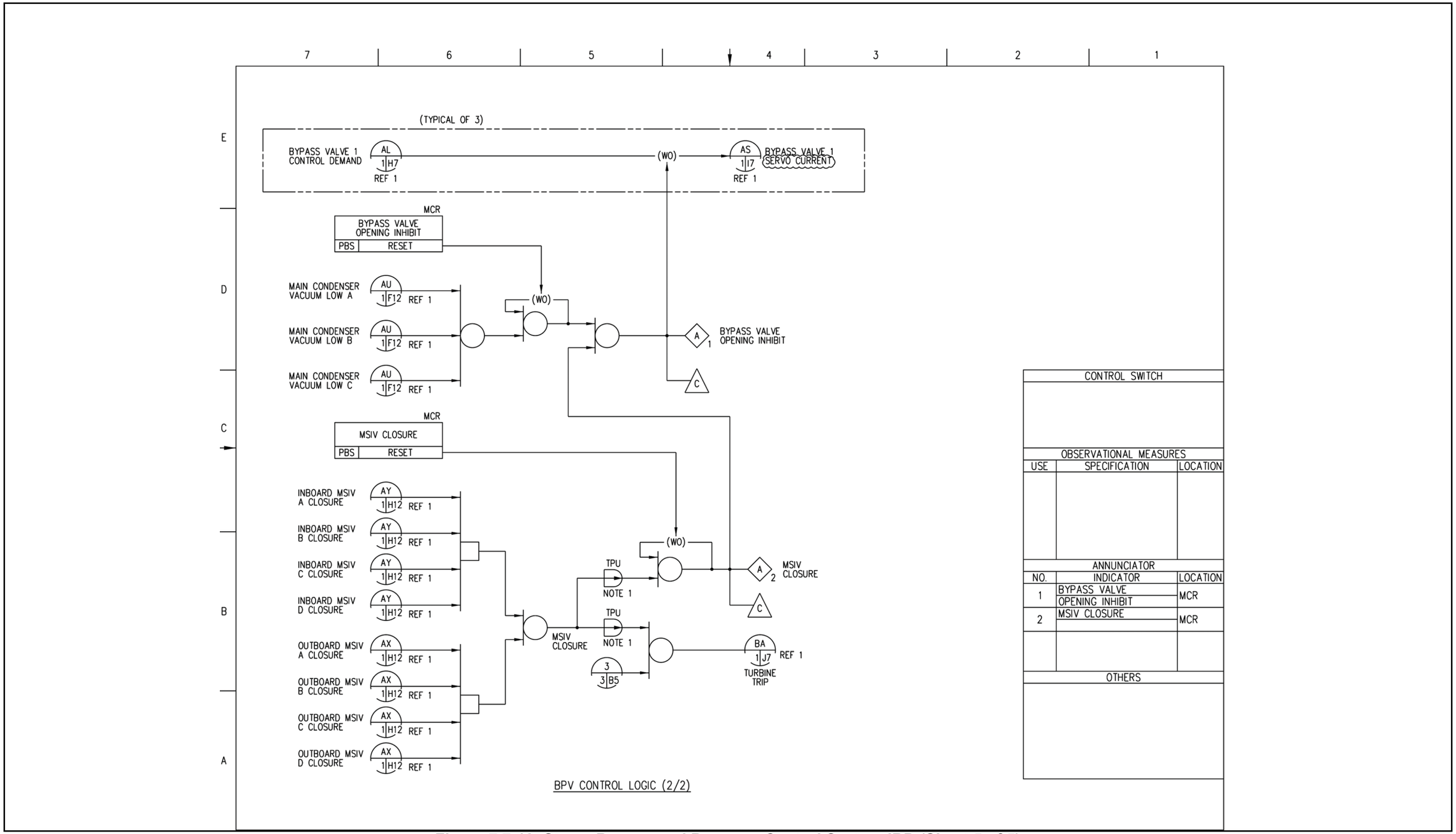

Figure 7.7-13 Steam Bypass and Pressure Control System IBD (Sheet 5 of 5)

NOTES:

1. UNLESS OTHERWISE INDICATED, THE DEVICE NUMBERS SHOWN ON THIS DIAGRAMS ARE PREFIXED WITH G41.
2. FUEL POOL COOLING AND CLEANUP SYSTEM IS POWERED FROM NON-1E BUSSES.
3. "#" FIXED NUMBERS IN THIS DIAGRAMS INDICATE THE SWGR FUNCTION NUMBERS.

SUPPLEMENTAL DOCUMENTS UNDER THE FOLLOWING IDENTITIES ARE TO BE USED IN CONJUNCTION WITH THIS DRAWING.

	REFERENCE DOCUMENT
1. FUEL POOL COOLING & CLEANUP SYS P&ID	G41-1010
2. FUEL POOL COOLING & CLEANUP SYS PFD	G41-1020

TABLE OF CONTENTS

SH	TITLE
1	NOTES, REFERENCE DOCUMENTS
2	FPC PUMP C001A
3	FPC PUMP C001B
4	F/D BYPASS VALVES MO-F021A,B
4	CONDENSATE MAKEUP VALVE MO-F038
5	F/D INLET ISOLATION VALVE MO-F005A,B
5	F/D OUTLET ISOLATION VALVE MO-F013
6	ANNUNCIATORS
7	ANNUNCIATORS
8	ANNUNCIATORS

MPL NO G41-1030

Figure 7.7-14 Fuel Pool Cooling and Cleanup System IBD (Sheet 1 of 8)

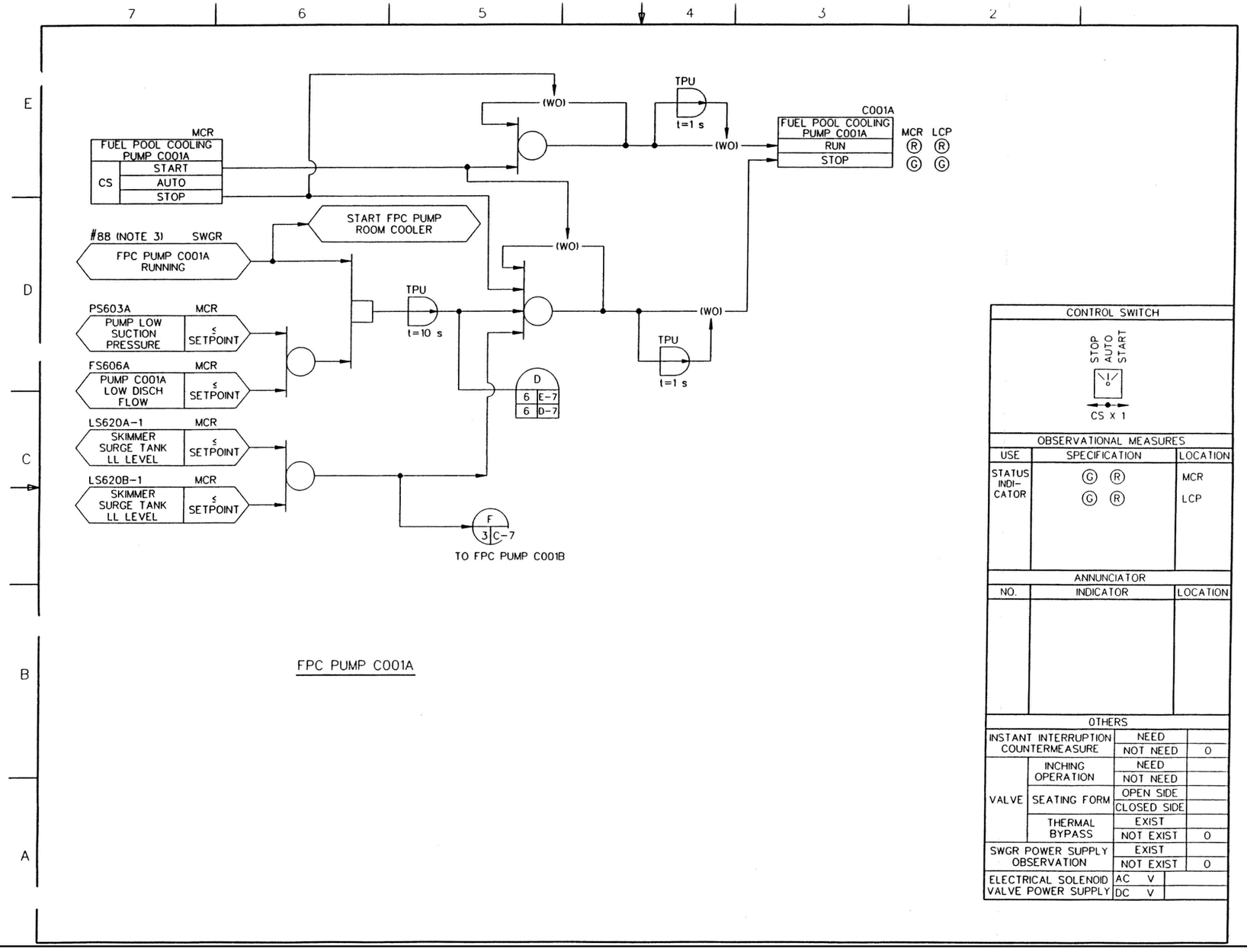

Figure 7.7-14 Fuel Pool Cooling and Cleanup System IBD (Sheet 2 of 8)

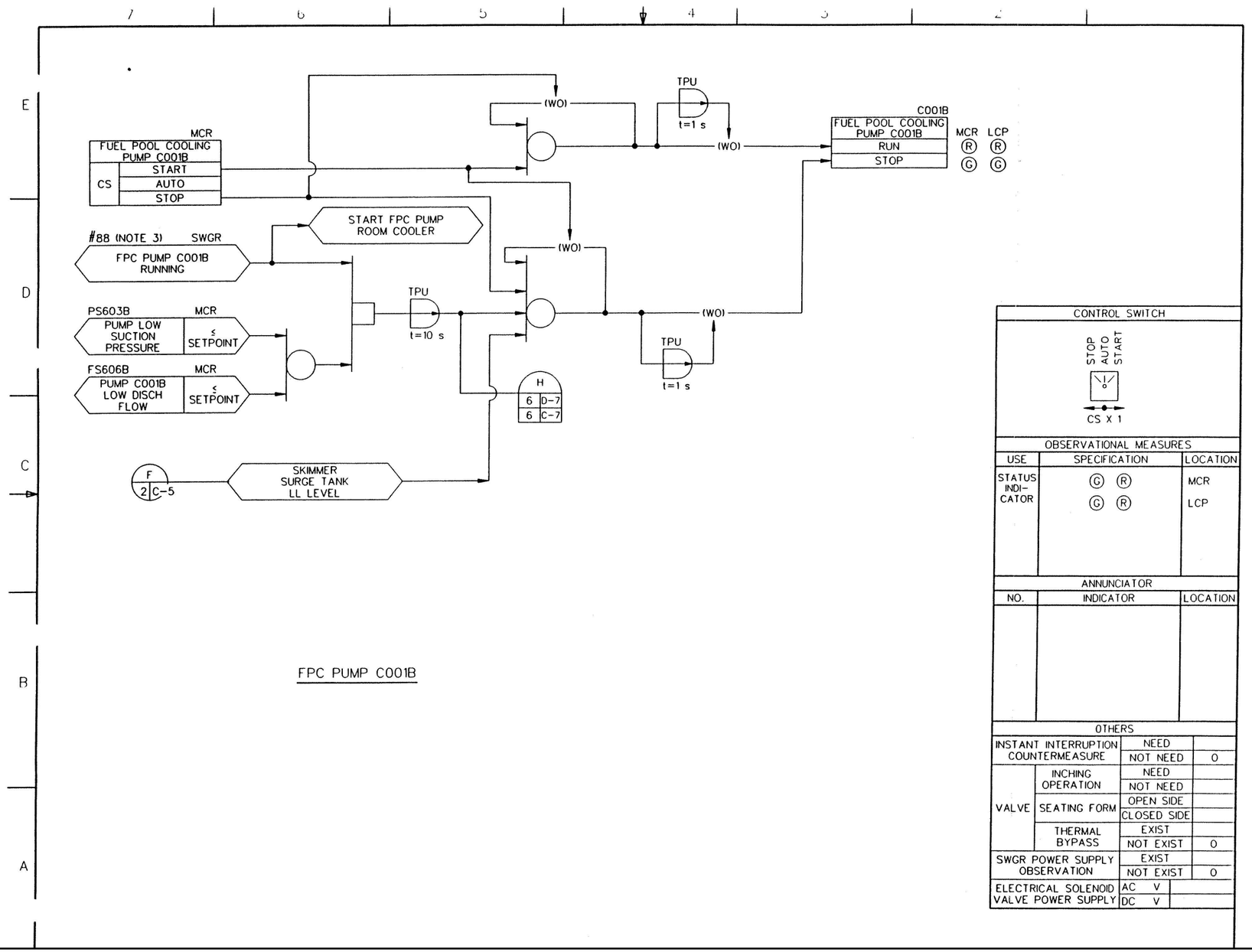

Figure 7.7-14 Fuel Pool Cooling and Cleanup System IBD (Sheet 3 of 8)

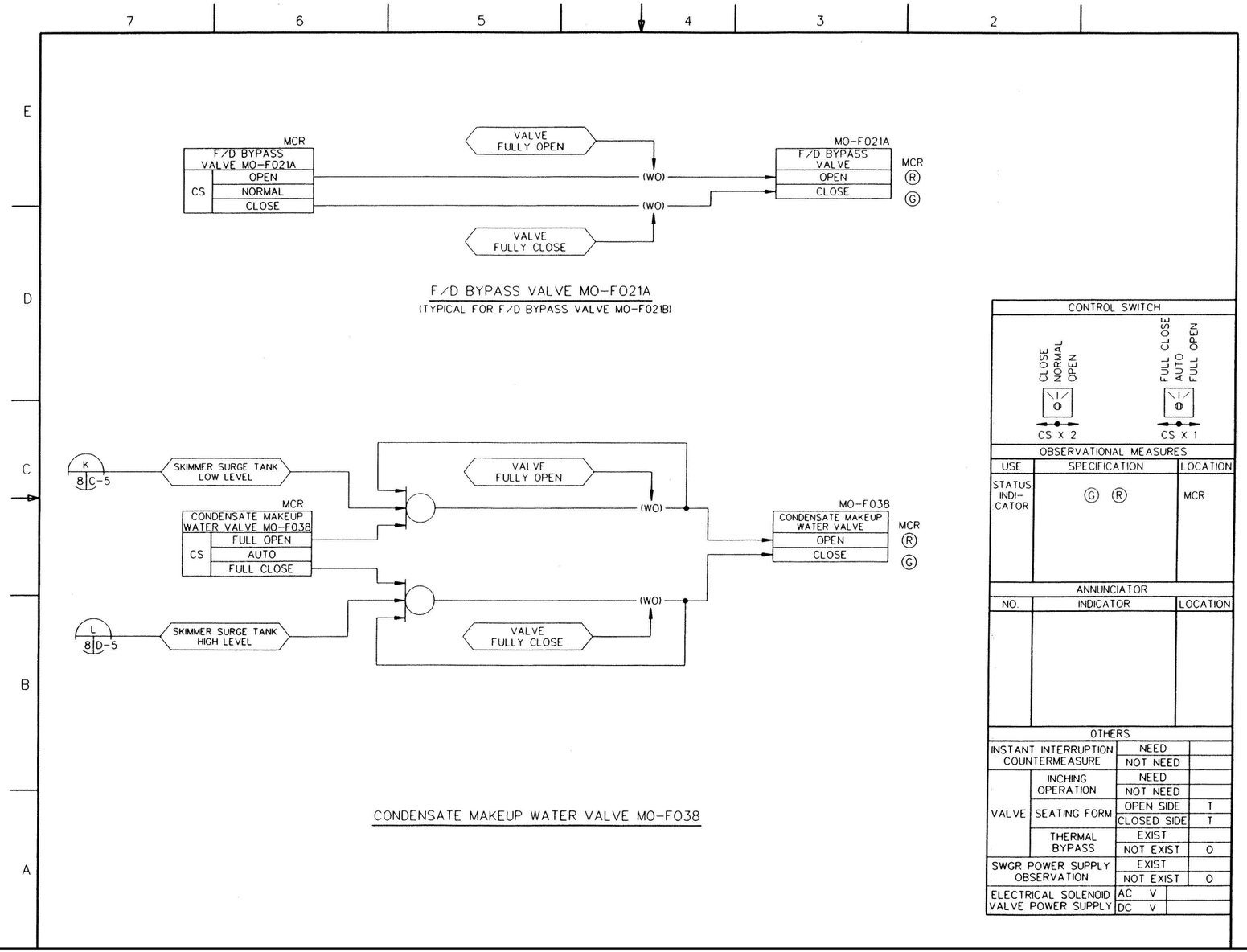

Figure 7.7-14 Fuel Pool Cooling and Cleanup System IBD (Sheet 4 of 8)

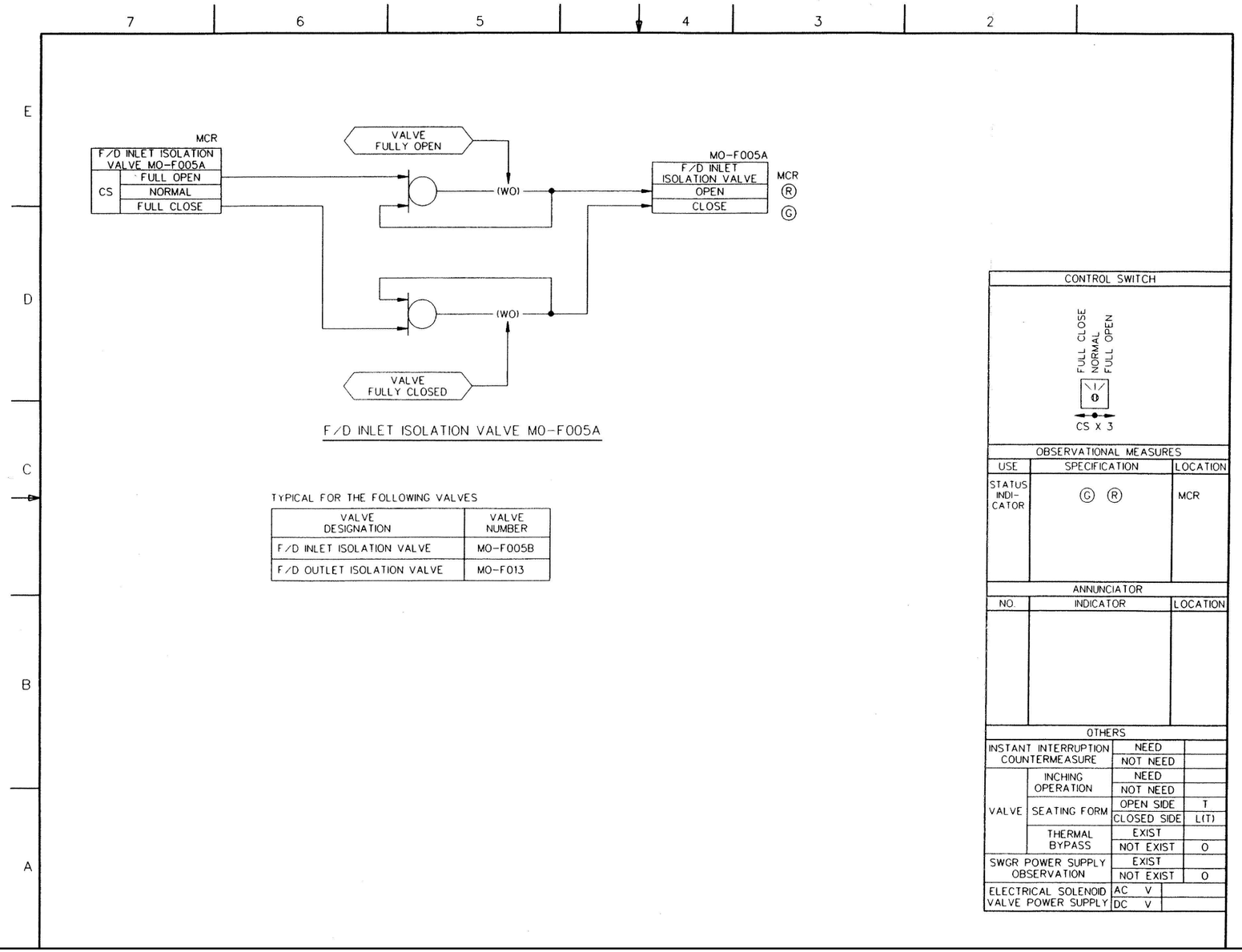

Figure 7.7-14 Fuel Pool Cooling and Cleanup System IBD (Sheet 5 of 8)

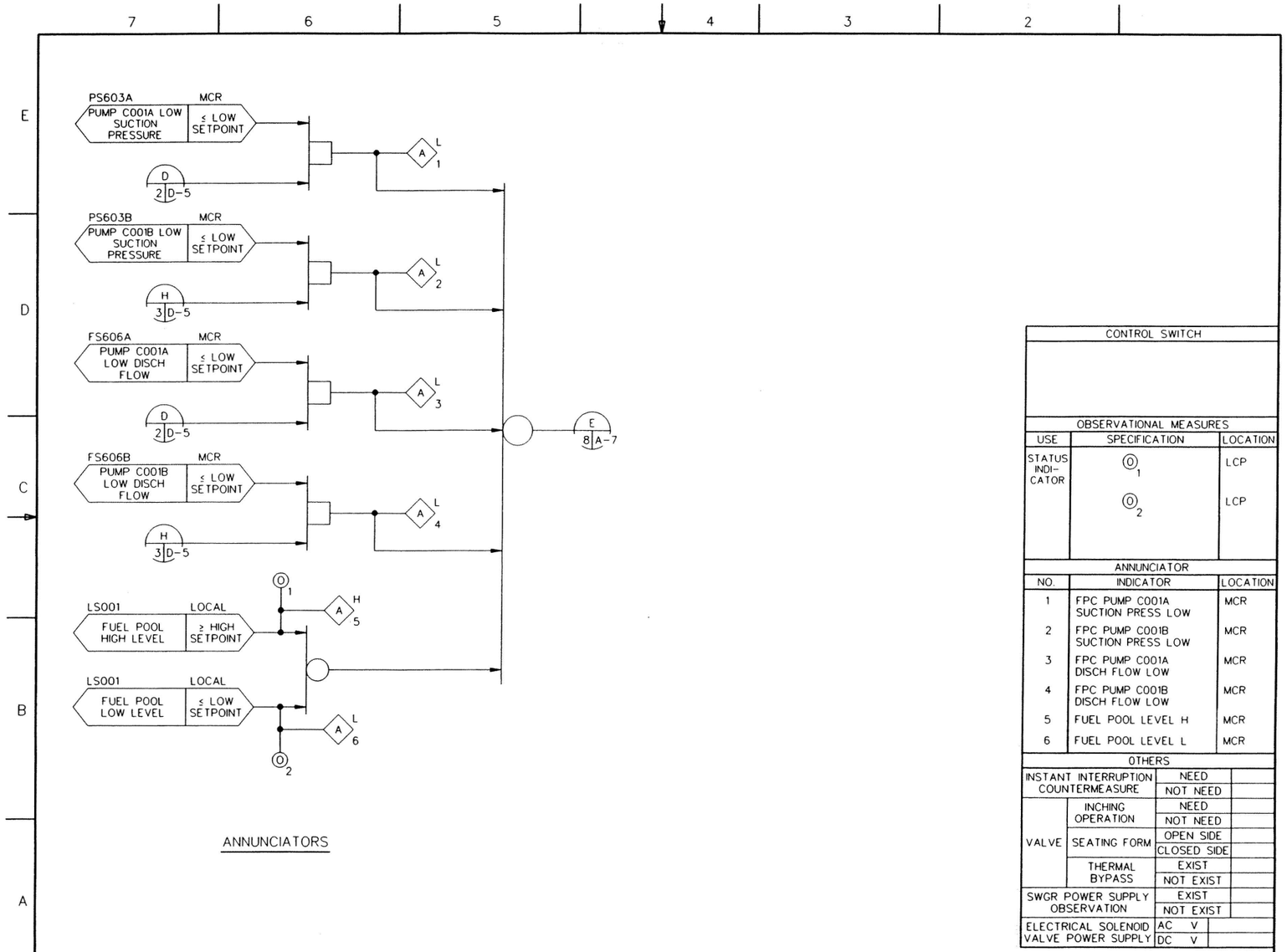

Figure 7.7-14 Fuel Pool Cooling and Cleanup System IBD (Sheet 6 of 8)

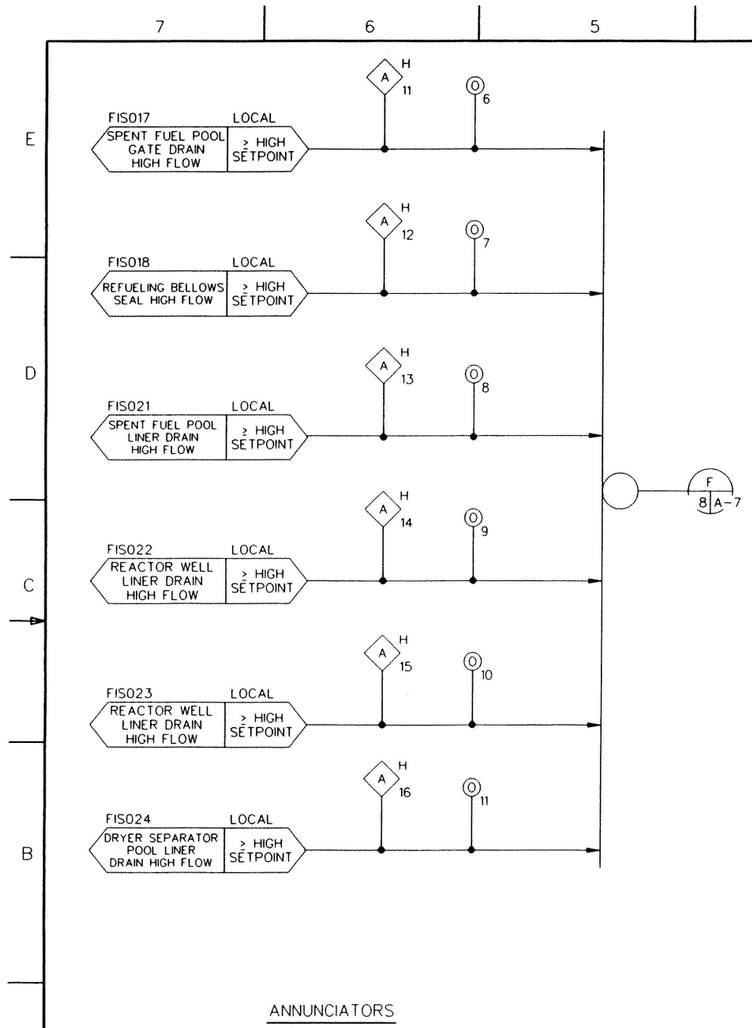

CONTROL SWITCH

OBSERVATIONAL MEASURES		
USE	SPECIFICATION	LOCATION
STATUS INDI-CATOR	O 6	LCP
	O 7	LCP
	O 8	LCP
	O 9	LCP
	O 10	LCP
	O 11	LCP

ANNUNCIATOR		
NO.	INDICATOR	LOCATION
11	SPENT FUEL POOL GATE DRAIN HIGH FLOW	MCR
12	REFUELING BELLOWS SEAL HIGH FLOW	MCR
13	SPENT FUEL POOL LINER DRAIN HIGH FLOW	MCR
14	REACTOR WELL LINER DRAIN HIGH FLOW	MCR
15	REACTOR WELL LINER DRAIN HIGH FLOW	MCR
16	DRYER SEPARATOR POOL LINER DRAIN HIGH FLOW	MCR

OTHERS			
INSTANT INTERRUPTION COUNTERMEASURE		NEED	
		NOT NEED	
VALVE	INCHING OPERATION	NEED	
		NOT NEED	
	SEATING FORM	OPEN SIDE	
		CLOSED SIDE	
	THERMAL BYPASS	EXIST	
		NOT EXIST	
SWGR POWER SUPPLY OBSERVATION		EXIST	
		NOT EXIST	
ELECTRICAL SOLENOID VALVE POWER SUPPLY		AC V	
		DC V	

Figure 7.7-14 Fuel Pool Cooling and Cleanup System IBD (Sheet 7 of 8)

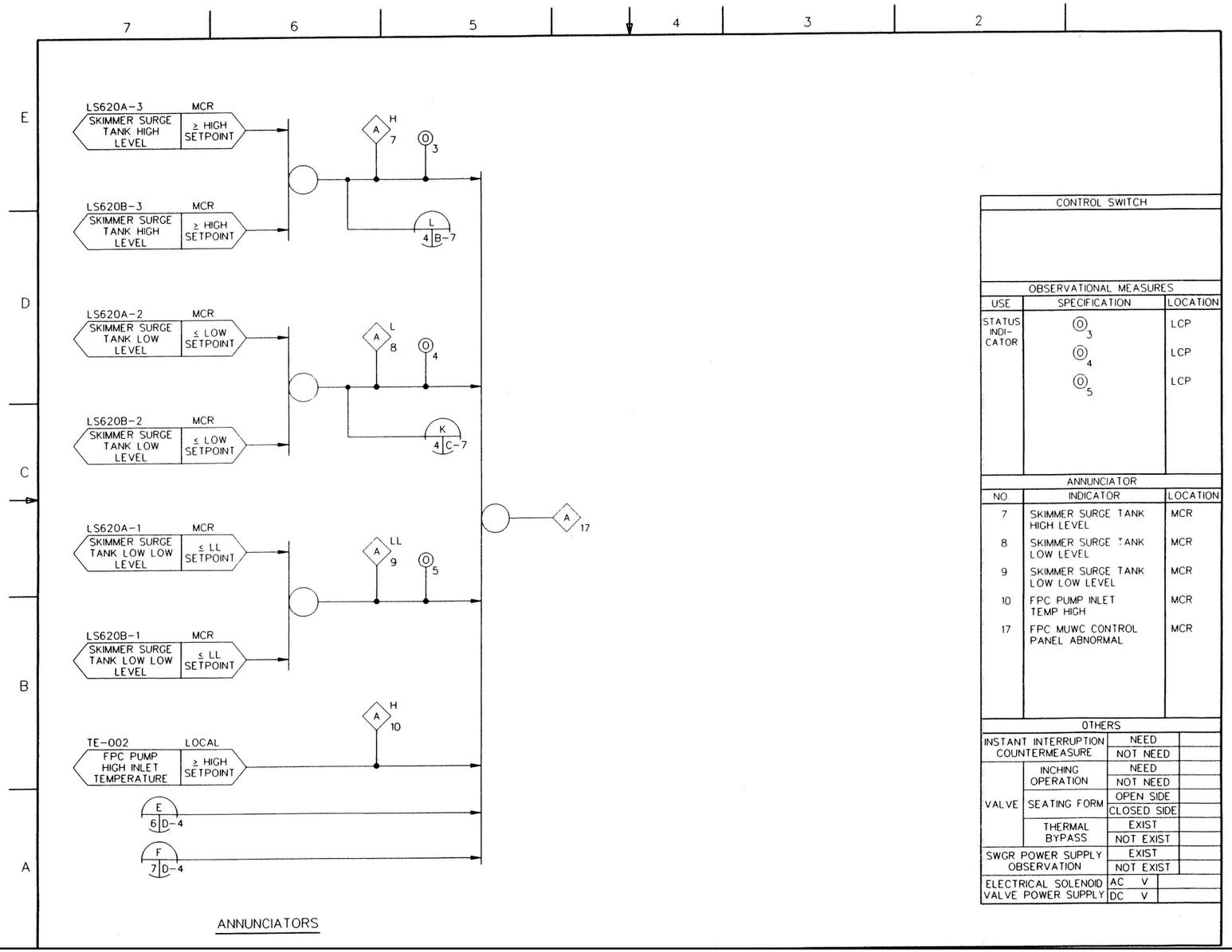

Figure 7.7-14 Fuel Pool Cooling and Cleanup System IBD (Sheet 8 of 8)