20.3 Questions/Responses

This subsection provides the responses for each of the NRC questions identified in Sections 20.1 and 20.2. For convenience, each question is repeated here before its corresponding response. These questions/responses are provided in groups corresponding to the NRC Requests for Additional Information (RAI) referenced in Section 20.4. Within each group, the questions/responses are presented in the numerical order of the question numbers. Tables and figures are provided at the end of each RAI group.

20.3.1 Response to First RAI — Reference 1

Question 210.1

In Subsection 5.2.1.2, the statement is made that Section 50.55a of 10CFR50 requires NRC staff approval of ASME Code Cases only for Class 1 components. Revise this statement to be consistent with the current (1987) edition of 10CFR50.55a which requires staff approval of Code Cases for ASME Class 1, 2, and 3 components.

Response 210.1

Response to this question is provided in revised Subsection 5.2.1.2.

Question 210.2

Revise Table 5.2-1 or provide additional tables in Subsection 5.2.1.2 which identifies all ASME Code Cases that will be used in the construction and in-plant operations of all ASME Class 1, 2, and 3 components in the ABWR. All Code Cases in these tables should be identified by Code Case number, revision and title. These tables should include those applicable Code Cases that are listed either as acceptable or conditionally acceptable in Regulatory Guides 1.84, 1.85 and 1.147. For those Code Cases listed as conditionally acceptable, verify that the construction of all applicable components will be in compliance with the additional Regulatory Guide conditions.

Response 210.2

Response to this question is provided in revised Subsection 5.2.1.2 and Table 5.2-1.

Question 250.1

Subsection 5.2.4.1 should state that the system boundary includes all pressure vessels, piping, pumps, and valves which are part of the reactor coolant system, or connected to the reactor coolant systems, up to and including:

(1) The outermost containment isolation valve in system piping that penetrates the primary reactor containment.

(2) The second of two valves normally closed during normal reactor operation in system piping that does not penetrate primary reactor containment.

(3) The reactor coolant system and relief valves.

Response 250.1

Response to this question is provided in revised Subsection 5.2.4.1.

Question 250.2

Subsection 5.2.4.2 should satisfy the requirements in ASME Code, IWA-1500.

Response 250.2

Response to this question is provided in revised Subsection 5.2.4.2.

Question 250.3
Subsection 6.6.8 should discuss the augmented inservice inspection for those portions of high energy piping enclosed in guard pipes.

Response 250.3
Augmented inservice inspection is not required for the ABWR design since there are no guard pipes enclosing high-energy piping between the containment isolation valves.

Question 251.1
Subsection 5.3.1.1 should state that the material will comply with the provisions of the ASME Code, Section III, Appendix I, and meet the specification requirements of 10CFR50, Appendix G.

Response 251.1
Response to this question is provided in revised Subsection 5.3.1.1

Question 251.2
Subsection 5.3.1.2 should state the specific subsection NB of ASME Code to which the manufacturing and fabrication specifications were alluded.

Response 251.2
Response to this question is provided in revised Subsection 5.3.1.2.

Question 251.3
Subsections 5.3.1.4.4 and 5.3.1.4.5 should be rewritten; the cross-reference is unacceptable.

Subsections 5.3.1.4.7, 5.3.1.5.2, 5.3.1.6.3, and 5.3.2.1.5; Revision 2 of Regulatory Guide 1.99 should be added in these subsections.

Response 251.3
Response to the first part of this question is provided in revised Subsections 5.3.1.4.4 and 5.3.1.4.5.

The GE ABWR Licensing Review Bases issued by the NRC on August 7, 1987 specifies a SRP effectivity date of March 30, 1987. Thus, the Regulatory Guides in effect as of that date are applicable to the ABWR. However, rather than providing the specific revision of each Regulatory Guide each time it is noted in the test of the SSAR, GE has chosen to provide the applicable revisions of the Regulatory Guides in SSAR Subsection 1.8.2.

Question 251.4
Subsection 5.3.1.6.1: the third capsule of the vessel surveillance program is designated as a standby; however, according to ASTM 185-82, the capsule should be withdrawn at the end of life. Provide justification for this deviation.

Response 251.4
Response to this question is provided in revised Subsection 5.3.1.6.1

Question 251.5
Subsection 5.3.1.6.3 states that according to estimates of worst-case irradiation effects, the adjusted reference temperature at end-of-life is less than 100°F, and the end-of-life upper-shelf energy exceeds 50ft-lb. Provide the calculation and analysis associated with the estimate.

Response 251.5
The calculation and analysis associated with the estimate is provided below:

Calculate RT_{NDT} Shift in Vessel Material

Ref.: Regulatory Guide 1.99 of May 1988.

A. I Weld Metal

Assume the following maximum values:

P = 0.020%, V = 0.05% Cu = 0.08%

Ni = 1.20% (Max Ni value considered in Regulatory Guide)

$\Delta RT_{NDT\ surface} = [CF]\ f^{(0.28 - 0.10 \log f)}$

k_1 = -0.20494 (Conversion Factor)
Chemistry factor CF = 42.22°C
Fluence: 4.0×10^{17} neutron/cm^2
$f = 4.0 \times 10^{17-19} = 4.0 \times 10^{-2}$
$\Delta RT_{NDT} = k_1\ 42.22 \times (4.0 \times 10^{-2})^{(0.28 - 0.10 \log 0.04)}$
= -2.24°C

II Plate: Cu = 0.05%, P = 0.015%, Ni = 0.73% (max)
k_2 = -448.33 (Conversion Factor)
CF = -0.56°C, Fluence 4.0×10^{17} neutron/cm^2

$\Delta RT_{NDT} = k_2\ (-0.56/42.22) \times -2.24 = -13.32°C$

III Forging: Cu = 0.05%, P = 0.015%, Ni = 1.0% (max)
CF = -0.56°C, Fluence 4.0×10^{17} neutron/cm^2
$\Delta RT_{NDT} = k_2\ (-0.56/42.22) \times -2.24 = -13.32°C$

B. For Fluence 6.0×10^{17} neutron/cm^2 after 60 years
$f = 6.0 \times 10^{(17-19)} = 0.06$

I Weld Metal

$k_3 = 0.11527$

CF = 42.2°C

$\Delta RT_{NDT} = k_3\ 42.2 \times (0.06)^{(0.28 - 0.10 \log 0.06)}$

= 1.57°C

II, III Forging and Plate

$k_4 = -568.82$

CF = –0.56°C

$$\Delta RT_{NDT} = k_4 1.57°C \times \frac{-0.56}{42.22} = (-12.22)°C$$

RT_{NDT} requirements per Vessel Specifications (Maximum Specified Values)

Shell courses, and nozzles	–6.67°C
Weld	–6.67°C

RT_{NDT} Shifts per new Regulatory Guide 1.99 (February 1986 Draft)

Material	ABWR Initial RT_{NDT}	Calculated Shift ΔRT at surface 4×10^{17} neutron/cm^2 after 40 years	Margin= $2\sqrt{\sigma_I 2 - \sigma_\Delta 2}$	Final RT_{NDT} ART
Weld	–6.67°C	–2.24°C	–2.24°C	2.22°C
Plate or Forging	–6.67°C	13.32°C	13.32°C	–20°C

Final RT_{NDT} = ART = Initial RT_{NDT} + ΔRT + Margin

The above projections are for the 40 year full power basis. The corresponding final RT_{NDT} for 60 years would be 10°C for welds and –17.78°C plates and forgings.

Drop in Upper Shelf Energy

Ref: Regulatory Guide 1.99 Rev 2

Material	% Cu	% Drop per Fig 2 of RG 1.99*
Weld	.08 max	14
Base Metal.	.05 max	11

* Based on cutoff fluence of 10^{18}

Initial Value 101.69 J

Final Values

Weld	101.69 x 0.86 = 87.45
Base	101.69 x 0.89 = 90.50

Question 251.6

Subsection 5.3.2.1 should clarify where "Reference 2" is located. Has the NRC staff reviewed and approved Reference 2? If not the staff needs to review Reference 2 in order to complete the review of this subsection.

Response 251.6

Reference 2, "Transient Pressure Rises Affecting Fracture Toughness Requirements for Boiling Water Reactors", January 1979, (NEDO-21778-A), is an NRC staff approved licensing topical report. This topical report was approved by letter to GE, dated November 13, 1978 according to NUREG-0390 Vol.7, No. 2 (October 15, 1984).

Question 251.7

Subsections 5.3.2.1.1, 5.3.2.1.2, 5.3.2.1.3, and 5.3.2.1.5 need to be rewritten. The level of detail must be comparable to that of Standard Review Plan 5.3.2 and Branch Technical Position MTEB 5-2.

Response 251.7

Response to this question is provided in revised Subsections 5.3.2.1, 5.3.2.1.1, and 5.3.2.1.5.

Question 251.8

Subsection 5.3.3 cited three GE documents:

(1) GE quality assurance program,

(2) Approved" inspection procedures, and

(3) NEDO-10029

Has the NRC staff reviewed and approved the above documents? The staff cannot satisfactorily review this subsection without reviewing the above three documents.

Response 251.8

The GE quality assurance program is contained in topical report NEDO-11029-04A, "GE BWR Quality Assurance Program", Revision 7, which has been approved by the NRC staff (May 1987).

"Approved inspection procedures" refers to GE approved inspection procedures which govern the manufacturing, fabrication, and testing operations of the reactor vessel fabrication process.

These inspection procedures are originated at the time the reactor vessel fabricator is selected, and, as has been the case in the past, the NRC staff will have review opportunities in accordance with 10CFR50 Appendix B.

NEDO-10029, "An Analytical Study on Brittle Fracture of GE-BWR Vessel Subject to the Design Basis Accident", July 1969, was also referenced in Subsection 5.3.3 of GESSAR, Docket No. STN-50-447. This information applies equally well to the ABWR.

Question 251.9

Subsection 5.3.3.1.1.1 discusses the 60-year life of the ABWR reactor vessel. The NRC requirements and calculations on the fracture toughness and material properties are based on a 40-year life. Provide justification for the applicability of the NRC's requirements on the 60-year life reactor vessel.

Response 251.9

Response to this question is provided in revised Subsection 5.3.3.1.1.1.

Question 251.10

Subsection 5.3.3.2 should include the following information: neutron fluence, shift in reference temperature RT_{NDT}, and upper shelf energy. The staff needs this information to compare to that of predicted values using Regulatory Guide 1.99.

Response 251.10

Response to this question is provided in revised Subsection 5.3.3.2.

Question 251.11

Subsection 5.3.3.6 should indicate that operating conditions should satisfy the pressure-temperature limits prescribed in Subsection 5.3.2.

Response 251.11

Response to this question is provided in revised Subsection 5.3.3.6.

Question 252.1

Subsection 4.5.1.1 (1) should state: "The properties of the materials selected for the control rod drive mechanism must be equivalent to those given in Appendix I to Section III of the ASME Code or parts A and B of Section II of the ASME Code or are included in Regulatory Guide 1.85, except that cold-worked austenitic stainless steels should have a 0.2% offset yield strength no greater than 90,000 psi."

Response 252.1

Response to this question is provided in revised Subsection 4.5.1.1 (1).

Question 252.2
Subsection 4.5.1.1 (2) should state: "All materials for use in this system must be selected for their compatibility with the reactor coolant as described in Articles NB-2160 and NB-3120 of the ASME Code."

Response 252.2
Response to this question is provided in revised Subsection 4.5.1.1 (2).

Question 252.3
Subsection 4.5.2.2: The first sentence should read, "Core support structures are fabricated in accordance with the requirements of ASME Code, Section III, Subsection NG-4000, and the examination and acceptance criteria shown in NG-5000."

Response 252.3
Response to this question is provided in revised Subsection 4.5.2.2.

Question 252.4
Subsection 4.5.2.3: The following statement should be added to the last sentence of the first paragraph, "The examination will satisfy the requirements of NG-5300."

Response 252.4
Response to this question is provided in revised Subsection 4.5.2.3.

Question 252.5
Subsection 4.5.2.4 should state: "Furnace sensitized material should not be allowed."

Response 252.5
Response to this question is provided in revised Subsection 4.5.2.4.

Question 252.6
Subsection 4.5.2.5 should state: "All materials used for reactor internals will be selected for their compatibility with the reactor coolant as shown in ASME Code Section III, NG-2160 and NG-3120. The fabrication and cleaning controls will preclude contamination of nickel base alloys by chloride ions, fluoride ions, or lead."

Response 252.6
Response to this question is provided in revised Subsection 4.5.2.5.

Question 252.7
Subsection 5.2.3.2.2 is mostly an academic discussion of BWR water chemistry effect on intergranular stress corrosion cracking (IGSCC) in sensitized stainless steels. The subsection should discuss the actual ABWR water chemistry effects on IGSCC. The subsection is vague about specific remedies or preventive measures to avoid IGSCC in ABWR. For example, the subsection failed to discuss how much hydrogen is needed for injection into the feedwater system or how the "tight conductivity control" would be implemented.

Also, provide references for the “Laboratory studies...” and “available evidence...” that were mentioned in this subsection.

Response 252.7
Response to this question is provided in revised Subsection 5.2.3.2.1.

Question 252.8
Subsection 5.2.3.2.3 should state that the requirements of GDC 4, relative to the compatibility of components with environmental conditions, are met by compliance with the applicable provisions of the ASME Code and by compliance with the recommendation of Regulatory Guide 1.44.

Specify the “very low limits” of the contaminants in the reactor coolant.

Response 252.8
Response to this question is provided in revised Subsection 5.2.3.2.3.

Question 252.9
Subsection 5.2.3.3.1 should clarify where and how the 45 ft-lb Charpy V value was obtained.

The ferritic material used for piping, pumps, and valves should comply with Appendix G, Section G-3100, of ASME Code Section III.

This subsection should indicate: “calibration of instruments and equipment shall meet the requirements of the code, Section III, Paragraph NB-2360.”

Response 252.9
Response to this question is provided in revised Subsection 5.2.3.3.1.

Question 252.10
Subsection 5.2.3.4.1.1 should be rewritten to include more detailed discussion on avoidance of significant sensitization and on how the ABWR design complies with the NRC regulatory requirements.

Response 252.10
Response to this question is provided in revised Subsection 5.2.3.4.1.1.

Question 252.11
Subsection 5.2.3.4.2.3 states that the ABWR design meets the intent of this Regulatory Guide (1.71) by utilizing the alternate approach given in Section 1.8. We cannot review this subsection because we have not received Section 1.8. In addition, this subsection should be rewritten because it lacks detailed discussion about welder qualification.

Response 252.11
Response to this question is provided in revised Subsection 5.2.3.4.2.3.

Question 281.1
In Section 5.1 (page 5.1-2) the function of the reactor cleanup system filter demineralizer should include the removal of radioactive corrosion and fission products in addition to particulate and dissolved impurities.

Response 281.1
Response to this question is provided in revised Section 5.1.

Question 281.2
In Subsection 5.2.3.2.2 (page 5.2-7) irradiation-assisted stress corrosion cracking (IASCC) of reactor internal components and its mitigation are not discussed. Present laboratory data and plant experience has shown that IASCC can be initiated even at low conductivity (< 0.3mS/cm) after long exposure to radiation.

Response 281.2
Response to this question is provided in the new Subsection 5.2.3.2.2.4, "IASCC Considerations."

Question 281.3
In Subsection 5.2.3.2.2 (pages 5.2-7 and 8) the ABWR standard plant design does not clearly incorporate hydrogen water chemistry to mitigate IGSCC. Since the plant design life is 60 years, hydrogen water chemistry may be of greater importance in reducing reactor coolant electrochemical corrosion potential to prevent IGSCC as well as IASCC. If hydrogen water chemistry is the referenced ABWR standard design, the following documents should be cited:

EPRI NP-5283-SR-A, "Guidelines for Permanent BWR Hydrogen Water Chemistry Installations" — 1987 Revision.

EPRI NP-4947-SR-LD, "BWR Hydrogen Water Chemistry Guidelines" — 1987 Revision (to be published).

Response 281.3
Response to this question is provided in revised Subsection 5.2.3.2.2.

Question 281.4
In Subsection 5.2.3.2.2 (page 5.2-9) the utilization of the General Electric zinc injection passivation (GEZIP) process for radiation buildup control for the ABWR is not discussed. GEZIP was identified as a required design feature in the ABWR presentation to NRC staff.

Response 281.4
The General Electric zinc injection passivation process (GEZIP) is not in the ABWR scope. However, an interface requirement has been added (see new Subsection 5.7.6) that requires the remainder of the plant to meet the water quality requirements of Table 5.2-5.

Question 281.5

In Subsection 5.2.3.2.2 (page 5.2-9) prefilming of stainless steel appears to be a promising method to reduce the buildup rate of activated corrosion products during subsequent plant operation. SIL No. 428 recommends preoperational testing of the recirculation system conducted at temperatures 230°F be done with the dissolved oxygen level controlled to between 200 and 400 ppb. Is control of radiation buildup through preoperational oxygen control being considered for the BWR standard plant? Are mechanical polishing and electropolishing of piping internal surfaces also being considered for reducing radiation buildup?

Response 281.5

Since the recirculation system piping has been eliminated from the ABWR design, SIL No. 428 does not apply. Preoxidation, mechanical polishing, and electropolishing are not being considered for other ABWR components at this time. However, these methods are available as promising techniques to reduce radiation buildup on all internal stainless steel surfaces.

Question 281.6

In Subsection 5.2.3.2.2.2 (page 5.2-9) cobalt 60 is identified as the principle contributor to shutdown radiation levels, especially the recirculation piping system of BWRs. Stellite contributes about 90% of the total cobalt 59 input to the reactor water (EPRI NP-2263, "BWR Cobalt Source Identification", February 1982). Since irradiation of cobalt 59 yields cobalt 60, reduction in the source of cobalt 59 is needed to reduce the buildup of shutdown radiation levels. Indicate Stellite surface areas (square feet) in nuclear steam supply system and balance of plant. Provide the criteria for selecting Stellite plant materials for the designed application. Provide evaluation of noncobalt-containing materials whose properties are adequate to replace Stellite in-plant applications.

Response 281.6

(1) Stellite Surface Area for BWR/6:

Total Nuclear Steam Supply System: 6.91m^2

Total Balance of Plant: 12.98m^2

For ABWR design, the above numbers are greatly reduced. Cobalt-based alloys have been eliminated from fuel assemblies, and control rod blades and drives.

(2) Criteria for Selecting Stellite Materials:

1. Wear resistance
2. Weldability
3. Experience and service history

4. Radiation level in area of application

(3) Evaluation of Noncobalt-containing Material to Replace Stellite:

The major source of cobalt from the reactor core has been Haynes 25 and Stellite 3 (cobalt-based alloys) for pins and rollers, respectively, in BWR control rods. Replacement of the cobalt alloy pins and rollers with noncobalt alloys has been extensively investigated under a joint GE-EPRI program (Project 1331-1). The results of this investigation are documented in the report, EPRI NP-2329, "Project" 1331-1, "Final Report", March 1982. The current design noncobalt materials are alloy X-750 for control rod rollers and 13-8 PH for the pins.

Question 281.7

Subsection 5.2.3.2.2.3(4) (page 5.2-10) states that control of reactor water oxygen during startup/hot standby may be accomplished by utilizing the de-aeration capabilities of the condenser. In addition, this section states that independent control of control rod drive (CRD) cooling water oxygen concentrations of < 50 ppb during power operation is desirable to protect against IGSCC of CRD materials. Are either one or both of the above dissolved oxygen controls incorporated in the ABWR standard plant design?

Response 281.7

In Subsection 5.2.3.2.2.3, control of reactor water oxygen by using the condenser and control of control rod drive water were mentioned as dissolved oxygen control methods. These two plant features are not in the Nuclear Island scope. However, an interface requirement has been added (see new Subsection 5.2.5) that requires the remainder of the plant to meet the water quality requirements of Table 5.2-5.

Question 281.8

In Subsection 5.2.3.2.2.3(13) (page 5.2-11) it states that the main steam line radiation monitor indicates an excessive amount of hydrogen being injected. An explanation of this occurrence should be discussed.

Response 281.8

Subsection 5.2.3.2.2.3(13) will be revised by September 30, 1988 to discuss the effects of excessive hydrogen injection upon the main steam line radiation monitor.

Question 281.9

Subsection 6.4.4.2 (page 6.4-6) discusses personnel respirator use in the event of toxic gas intrusion into the control room. However, the chlorine detection system is not discussed. Also, any control functions that are automatically triggered by a chlorine detector alarm (closing intake dampers, energizing control room HVAC system recirculation) should be identified.

Response 281.9

The ABWR control room habitability system does not include a chlorine detection system.

Question 281.10

In the October 1987 ABWR presentation to the NRC staff the design features and/or requirements to improve water chemistry for GE-ABWR were specified. Address each one of these design features and/or requirements listed in Table I in the ABWR Standard Safety Analysis Report.

Table 1: Comparison of Requirements in ABWR Standard Safety Analyses Report and ABWR Presentation to NRC Staff (October 21 and 22, 1987)

	ABWR Presentation to NRC Staff	ABWR Standard Safety Analysis Report
1. Selection of low cobalt materials to minimize radiation buildup	Required Design Feature	Not discussed in Subsection 5.2.3.
2. Hydrogen water chemistry to suppress IGSCC	Required Design Feature	Subsection 5.2.3.2.2 references normal water chemistry
3. Zinc injection to minimize radiation buildup	Required Design Feature	Not discussed in Subsection 5.2.3.2.2.2
4. Full flow deep bed condensate system to reduce feedwater impurities	Required Design Feature	Not discussed in Subsection 5.2.3.2.2.3
5. Improved online monitoring instrumentation to assure water quality	Ion chromatography electrochemical corrosion potential, and crack arrest verification system. Required design features	Only electrochemical corrosion potential discussed in Subsection 5.2.3.2.2.3.
6. Improved corrosion-resistant materials for steam extraction piping to minimize feedwater impurities	Required Design Feature	Not discussed in Subsection 5.2.3.2.2.3
7. Highly corrosion-resistant condenser tubes to minimize leakage into condensate system	Required Design Feature	Not discussed in Subsection 5.2.3.2.2.3.
8. Maintain electrochemical corrosion potential < 0.23 V to suppress IGSCC	Required Design Feature	Not listed in Table 5.2-5.
9. Erosion/corrosion-resistant materials in steam extraction and drain lines to minimize failures	Design Feature	Not discussed in Subsection 5.4.9.

Table 1: Comparison of Requirements in ABWR Standard Safety Analyses Report and ABWR Presentation to NRC Staff (October 21 and 22, 1987) (Continued)

	ABWR Presentation to NRC Staff	ABWR Standard Safety Analysis Report
10. Ease of leak detection in and repair of the main condenser	Design Feature	May be in Subsection 10.4.1 which has not been submitted yet.
11. 2% Reactor water cleanup system to improve water quality and occupational radiation exposure	Design Feature	Not discussed in Subsection 5.2.3.2.2.
12. Full flow recirculation to main condenser from cleanup outlet to reduce feedwater impurities	Design Feature	Not discussed in Subsection 5.2.3.2.2.3.

Response 281.10

Item 1—Response to Item 1 of this question is provided in revised Subsection 5.2.3.2.2.2.

Item 2—Response to Item 2 of this question is provided in revised Subsection 5.2.3.2.2.

Item 3—The system for adding zinc to the feedwater is discussed in new Section 9.3.11.

Item 4—The system which includes a full flow deep bed condensate treatment system is discussed in revised Subsection 5.2.3.2.2.3 and new Subsection 10.4.6.

Item 5—New and improved water quality monitoring instrumentation is being constantly developed and introduced for use in BWR plants. Several useful instruments have been developed and introduced within the past few years. GE will evaluate the state of the art when a BWR is undergoing detailed design and will incorporate such instruments that are necessary to assure proper water quality.

Item 6—Response to Item 6 of this question is provided in revised Subsection 5.2.3.2.2.3.

Item 7—Response to Item 7 of this question is provided in revised Subsection 5.2.3.2.2.3.

Item 8—Response to Item 8 of this question is provided in revised Subsection 5.2.3.2.2.2 and Table 5.2-5.

Item 9—Response to Item 9 of this question is provided in revised Subsection 5.2.3.2.2.3.

Item 10—Response to Item 10 of this question is provided in revised Subsection 5.2.3.2.2.3.

Item 11—Response to Item 11 of this question is provided in revised Subsection 5.2.3.2.2.

Item 12—The condensate treatment system which includes full flow recirculation to main condenser from condensate cleanup outlet is discussed in revised Subsection 10.4.6.2.

Question 470.1

Subsection 15.6.2 of the ABWR FSAR provides your analysis for the radiological consequences of a failure of small lines carrying primary coolant outside of containment. This analysis only considers the failure of an instrument line with a 1/4-inch flow restricting orifice. Show that this failure scenario provides the most severe radioactive releases of any postulated failure of a small line. Your evaluation should include lines that meet GDC 55 as well as small lines exempt from GDC 55.

Response 470.1

The analysis for failure of a small line carrying primary coolant was conservatively analyzed as a failure of an instrument line with full flow for a period of two hours. This analysis is deemed conservative for the reason given below.

Of all the lines carrying coolant penetrating the primary containment wall, only the instrument lines are exempt from GDC 55. All other lines use some form of check valve/motor-operated valve combination to stop the flow of primary coolant in the event of a line break. Typically, the motor-operated valves close at the rate of 5.08 cm per ten seconds. Considering a two-inch line and assuming that a flow of 79.4kg per second would result in operator action within 60 seconds, the total mass released over the 70 second period would be approximately 5442.2kg or about one half of the assumed release over two hours from the instrument line. Using this logic and these simplified calculations, it is found that a two-hour instrument line break bounds releases for small lines.

Question 470.2

Provide a justification for your assumption that the plant continues to operate (and therefore no iodine peaking is experienced) during a small line break outside containment (Subsection 15.6.2) accident scenario. Also provide the basis for the assumption that the release duration is only two hours.

Response 470.2

The analysis for failure of a small line carrying primary coolant was based upon considering the plant remaining at full power for a period of two hours at which time flow was stopped. For conservative purposes, the release was considered instantaneous in the actual computations. These parameters were chosen for conservatism and ease of computation. The actual case of the rupture of an instrument line is described in Chapter 8 of NEDO-21143-1 (Reference 15.6-2 of SSAR Subsection 15.6.7) and results in full flow for approximately ten minutes following operator action and gradual depressurization over a five-hour period. The total mass of liquid released is approximately 5442.2kg or one-half of the assumed release analysis. In addition, iodine spiking is considered on a release per fuel bundle basis. With the spiking term, which is estimated as a 15% initial release following release of the remaining 85% proportional to the

depressurization, it is found that the results are similar to those analyzed in Section 15.6 but slightly less conservative.

Question 470.3

Subsection 15.6.4.5.1.1 of the FSAR gives the iodine source term (concentration and isotopic mix) used to analyze the steam-line-break-outside-of-containment accident. The noble gas source term, however, is not addressed. Provide the noble gas source term used. Also the table in Subsection 15.6.4.5.1.1 seems heavily weighted to the shorter lived activities (i.e., I-134). Provide the bases for the isotopic mix used in your analysis (iodine and noble gas).

Response 470.3

Subsection 15.6.4.5.1.1 states that for case 1 the noble gas source term used was equivalent to an offgas release of 1.85 GBq/s and 11.1 GBq/s for case 2. In both cases, the source term is referenced to a 30-minute decay time. The isotopic distribution for such source terms are relatively standard throughout the industry and can be found in Table 2-2 of NUREG-0016. For the iodine isotopes the concentrations are technical specification limits of 7.4 kBq/g(case 1) and 148 kBq/g (case 2) dose equivalent to I-131. The isotopic breakdown is based upon evaluations of BWR iodine chemistry in the early 1970's and is given in Reference 2 of SSAR Subsection 15.6.7. The breakdown is as follows, and is similar to that found in Table 2-2 of NUREG-0016:

I-131	0.073
I-132	0.71
I-133	0.5
I-134	1.4
I-135	0.73

Question 470.4

Subsection 15.6.5.5 states that the analysis is based on assumptions provided in Regulatory Guide 1.3 except where noted. For all assumptions (e.g., release assumed to occur one hour after accident initiation, the chemical species fractions for iodine, the temporal decrease in primary containment leakage rates, credit for condenser leakage rates, and dose conversion factors) which deviate from NRC guidance such as regulatory guides and ICRP2, provide a detailed description of the justification for the deviation or a reference to another section of the SSAR where the deviations are discussed in detail. Provide a comparison of the dose estimates using these assumptions versus those which result from using the NRC guidance.

Response 470.4

The evaluation of the loss-of-coolant accident (LOCA) involved several assumptions which differ from those outlined in Regulatory Guide 1.3 and SRP 15.6.5. Each assumption is shown in Table 20.3-1 with an associated explanatory paragraph below. In addition, the estimated dose

for the two-hour site boundary dose at 300 meters and the LPZ 30-day dose at 800 meters is given in Table 20.3.1-1 for each assumption.

(1) **1 Hour Release Following Scram—** The ABWR incorporates a redundant emergency core cooling system (ECCS) to supply makeup water in the event of a LOCA. The ECCS is sized so that in such an event sufficient water is supplied to insure that core uncovery does not occur. Therefore, the assumptions as to fission product release under Regulatory Guide 1.3 for a LOCA with proper operation of the ECCS are not justified. However, given a potential spectrum of failure of equipment or operator error in conjunction with a LOCA, core uncovery is justified ranging on a time scale of a few tens of minutes for total failure of all systems, to several days for gradual deterioration of equipment. Based upon evaluations of ECCS responses to a wide variety of conditions, it is reasonable to assume that core uncovery would not proceed for a minimum of one hour given the single failure proof design of the system.

(2) **Primary Containment Leakage—** Following a LOCA case, Regulatory Guide 1.3 stipulated the containment leakage should remain constant for 30 days. Regulatory Guide 1.4 (PWR) permits a reduction by a factor of two 24 hours after a LOCA. Containment leakage is proportional to containment pressure assuming that design leakage is not significantly exceeded. The analysis of containment pressure given in Section 6.2 and long term studies under a variety of conservative assumptions show that the ABWR primary containment pressure is a factor of two below design pressure within 12 hours following a LOCA and decreases slowly after that. Based upon this type of evaluation, the reduction in leakage by a factor of two 24 hours after a LOCA is justifiable.

(3) **Iodine Release Fractions—** The release of substantial quantities (>10%) of iodine from the core of a nuclear reactor predicates significant damage to the fuel and the associated fuel assemblies. The only means by which such damage might be sustained is extended high temperatures leading to fuel melt. Such damage will result in core conditions resulting in the evolution of CsI rather than the I_2 assumed in the regulatory guide (Reference 20.3.1-1). The formation of organic iodides is based upon the release of I_2 in the presence of adequate concentrations of organic constituents to form organic iodides (References 20.3.1-2 and 20.3.1-3). Such conditions cannot be reasonably expected since the iodine will be bound as CsI. Therefore, it has been assumed that the formation of iodine species will result in primarily CsI with a minor fraction as is estimated in Reference 1 of organic iodides.

Two other points need to be considered. The first is production of organic forms by radiolysis in the suppression pool. Based upon Reference 20.3.1-4, with pH levels in the wetwell greater than 9, the evolution of iodine species is not expected. The second is consideration of accident situations leading to only minor fuel damage resulting in

primarily a fuel gap inventory release. Such a release due primarily to low temperature can be expected to consist of I_2 gas and result in some organic iodide formation. However, such releases are considered under the small line break accident case and control rod drop accident cases.

(4) **Suppression Pool Scrubbing—** The ability of the suppression pool in the BWR to remove particulate material and elemental iodine has in the past been prohibited under Regulatory Guide 1.3, due, it is thought, to a lack of adequate understanding of the phenomena involved. The ABWR is designed with safety/relief valves and horizontal downcomers integrated into the building to insure that any release of fission product material will be subject to transport to the wetwell via the suppression pool. Over the last several years a preponderance of both empirical and theoretical evidence has been gathered which adequately states the case for suppression pool scrubbing. This has culminated in the development of the GE DECON computer code for evaluation of suppression pool scrubbing and which, when evaluated against the empirical evidence, accurately predicts the empirical results better than any current simulation. Using the DECON code on the conditions expected in the ABWR under LOCA simulation results in overall decontamination factors far in excess of the 100 assumed in the analysis. Therefore, it was considered reasonable in light of the current knowledge to assume a conservative overall decontamination factor for the pool of 100.

(5) **MSIV Leakage—** The evaluation of potential leakage during a LOCA from the main steam lines has centered on the leakage of the MSIVs and potential for direct release to the environment. This has in the past resulted in the issuance of Regulatory Impact Issue C-8 by the NRC and the use of main steam leakage control systems. Over the past several years, considerable effort has been expended on this subject by the BWR Owners Group and the NRC and has resulted in a series of reports and maintenance procedures for utilities. The ABWR technical specification of MSIV performance recognized potential seating and leakage problems and therefore uses a graduated leakage performance criteria shown in Figure 15.6-2. The evaluation of radionuclide leakage from these valves were then made in accordance with the procedure given in Reference 20.3.1-5, except as noted below.

(a) The primary containment served as a single large repository for fission products from which leakage was derived for the pathways via the reactor building and the MSIVs. Material directly injected from the pressure vessel to the drywell were assumed over a short period of time to cycle into the wetwell. Following pressure suppression, the wetwell airspace would then be considered linked to the drywell airspace via the vacuum breakers. Therefore, a multiple flow path in primary containment was not evaluated.

(b) Flow through each steamline was considered independently at that line flow rate (see Figure 15.6-2). The transport time down each line was considered at

a rate three times the plug flow rate specified in Reference 20.3.1-5. This value is a rule of thumb derived from experience in flow through large pipes, and when compared to the results of Reference 20.3.1-6, is similar.

(c) Plateout in the steamlines was not considered for the first 48 hours after the LOCA to allow for line cooling. This was adopted as conservative, based upon the arguments found in Reference 20.3.1-6. The plateout model is found in Reference 20.3.1-5.

(d) The primary controlling factor for MSIV leakage is condenser plateout and leakage. For the condenser, a single mixed volume equal to one-half of the free air volume in the condenser was assumed. Leakage from the condenser assumed that the total in-leakage from the steam lines was non-condensible plus an additional leakage of 2.83 m^3 per hour based upon barometric pressure changes from Reference 20.3.1-6. Such a leakage is considered conservative since the leakage to the condenser would primarily be condensible and the barometric pressure change required to cause a 2.83 m^3 per hour change could be extremely large (a hurricane). The condenser plateout model used was that found in Reference 20.3.1-5.

(e) Following release from the condenser, the meteorology and the health effects model were those assumed in Regulatory Guide 1.3 and are described in SSAR References 20.3.1-2 through 20.3.1-4.

References for Response 470.4

20.3.1-1 "Technical Basis for Estimating Fission Product Behavior During LWR Accidents", NUREG-0772, June 1981.

20.3.1-2 Postma, A.K. and Zavadoski, R.W., "Review of Organic Iodide Formation Under Accident Conditions in Water-Cooled Reactors", WASH-1233, October 1972.

20.3.1-3 Malinauskas, A.P. and Bell, J.T., "The Chemistry of Fission Product Iodine Under Nuclear Reactor Accident Conditions", "Nuclear Safety", Vol. 28, No. 4, Oct-Dec 1987.

20.3.1-4 Lin, C.C., "Chemical Effects of Gamma Radiation on Iodine in Aqueous Solutions"," Journal of Inorganic and Nuclear Chemistry", Vol. 42 (1980) 1101–1110.

20.3.1-5 Careway, H.A. et al, "A Technique for Evaluation of BWR MSIV Leakage Contribution to Radiological Dose Rate Calculations", NEDO-30259, GE, Sept. 1985.

20.3.1-6 Ridgely, J.N. and Wohl, M.L., "Resolution of Generic Issue C-8", NUREG-1169, Aug. 1986.

Question 470.5

Provide a discussion of, or reference to, the analysis of the radiological consequences of leakage from engineered safety feature components after a design basis LOCA.

Response 470.5

Leakage from engineered safety features are not specifically analyzed. The total leakage from the primary containment is restricted to 0.5% per day for all leakage except that through the main steam line isolation valves. Leakage from engineered safety features is then included in the 0.5% per day such that all leakage from equipment external to the primary containment shall not result in an airborne release which when combined with the containment leakage shall result in an equivalent release greater than 0.5% per day.

The following is a first order estimation of the effect of ECCS Leakage on Total Primary Containment Leakage.

(1) Leakage was estimated from the ABWR ECCS systems including the RHR and HPCF. The RCIC was ignored as a minor contribution since the RCIC will cease to operate on decrease of steam flow prior to any fission product release. The leakages from the systems were:

(a) 35 RHR valves

10 HPCF valves

45 valves total, total valve steam leakage = 7.57E–08 m^3/s

(b) 3 RHR pumps

2 HPCF pumps

5 pumps total, total normal pump leakage = 2.78E–08 m^3/s

(c) Total ECCS leakage = 1.03E–07 m^3/s

(2) Primary Containment Leakage

0.5%/day * 25% core inventory = 0.00125 core fraction/day

(3) ECCS Leakage

0.5 core inventory/3,899 m^3 water = 1.28E–04 core frac/m^3

1.28E–04 * 1.03E–07 * 60 * 60 * 24 = 0.00000114 core frac/day

flashing = 0.4

Total airborne release from ECCS = 0.00000114 * 0.4 = 0.000000456 frac/day

Conclusion:

ECCS leakage is a small fraction of total primary containment leakage

Question 470.6
For the spent fuel cask drop accident, what is the assumed period for decay from the stated power condition? What is the justification for that assumption?

Response 470.6
Table 15.7-12 has been corrected by changing "core" to "storage" under item I.E. The cask drop accident assumes a 1000 day exposure prior to removal from the core with a radial peaking factor of 1.5. Decay time upon removal from the core is 120 days prior to the accident. This 120 day period was conservatively estimated at one-third of a year, since based upon current practice the minimum time to ship fuel to a long term storage facility is one year (in the case of the GE Morris facility) and 10 years in the case of government storage facilities.

Question 470.7
The tables in Chapter 15 should be checked and revised as appropriate. In several cases the footnotes contain typographical errors related to defining the scientific notation. Table 15.7-12 also appears to contain inappropriate references to Table 15.7-16, rather than Table 15.7-13.

Response 470.7
The response to this question is provided in revised Tables 15.7-10, 15.7-12, and 15.7-13.

Question 470.8
It is stated that Regulatory Guides 1.3 and 1.145 were used in the calculations of X/Q values. Based on the values presented, it appears as though a Pasquill stability Class F and one meter per second wind speed were assumed, with adjustment for meander per Figure 3 of Regulatory Guide 1.145. If this is not the case, describe the assumptions and justification used in calculating the X/Q values which are used in the Chapter 15 dose assessments.

Response 470.8
All meteorological calculations in Chapter 15 were made based upon the equations given in Regulatory Guide 1.145 and the tables in Regulatory Guide 1.3.C.2.g(3). Calculations have been encoded into a computer program for routine use and are detailed in report NEDO-20804, "Atmospheric Dispersion CHIQUO2 Function", Feb. 1979. In all cases, a ground level release was assumed, and where permitted by regulatory guide or SRP, building wake and plume meander accounted for. In addition, the basis for meteorological calculations is found in Appendix B of Reference 2, SSAR Subsection 15.6.7.

Question 470.9
The SGTS filter efficiencies of 99% for inorganic and organic iodine are higher than the 90% and 70% values, respectively, assumed in Regulatory Guide 1.25 if it can be shown that the building atmosphere is exhausted through adsorbers designed to remove iodine. Provide a justification for the use of the higher values.

Response 470.9

The ABWR incorporates a 6-inch charcoal bed in the SGTS filter train, and in accordance with Table 2 of Regulatory Guide 1.52 is permitted a removal efficiency for both elemental and organic forms of iodine of 99%.

Question 470.10

Dose related factors such as breathing rates, iodine conversion factors and finite vs. infinite cloud assumptions for calculating the whole body dose are not stated explicitly, although reference is made to Regulatory Guide 1.25 and another document. State these assumptions explicitly and justify the use of any values which deviate from Regulatory Guide 1.25.

Response 470.10

In all cases except the control room evaluation, a semi-infinite cloud model was used to calculate dose conversion factors. This model was based upon Regulatory Guide 1.3 and Slade's "Meteorology and Atomic Energy" -1968. A detailed explanation of the model with related factors is found in Appendix C in Reference 2 of SSAR Subsection 15.6.7. In the case of the control room dose, the dose model was a finite cloud model to account for the limited size of the control room and is given in Section 2.5 of Reference 3 of SSAR Subsection 15.6.7.

Table 20.3.1-1 Sensitivity Study of Parameters for LOCA Analysis (Response to Question 470.4)

	Site Boundary 24 Hr. Dose at 300 m (mSv)		LPZ Dose for 30 Days at 800 m (mSv)	
	Thyroid	Whole Body	Thyroid	Whole Body
1. LOCA Results	15	6.2	220	120
2. No Initial 1 Hr. Hold-up	15	9.0	220	130
3. No Pressure Reduction @ 24 Hrs	NC	NC	220	130
4. Iodine Species Consistent with Regulatory Guide 1.3	100	6.4	17000	130
5. No Suppression Pool Scrubbing	1400	9.2	9300	130
6. No Steamline Plateout	15	6.2	230	120
7. No Steamline Plateout or Hold-up	15	6.4	230	120
8. No Condenser Plateout	23	6.2	3400	120
9. No Condenser Plateout or Hold-up	2800	410	13000	700

Note: All evaluations are made independently of each other.

20.3.2 Response to Second RAI — Reference 2

Question 430.1

Provide a failure modes and effects analysis of the control rod drive system (CRDS) in tabular form with supporting discussion to delineate the logic employed. The failure analysis should demonstrate that the CRDS can perform the intended functions with the loss of any active single component. These evaluations and assessments should establish that all essential elements of the CRDS are identified and provisions are made for isolation from nonessential CRDS elements. It should be established that all essential equipment is protected from common mode failures such as failure of moderate-and high-energy lines. The failure mode and effects analysis of the control rod drives should include water, air and electrical failures to CRDs and how the CRD system operation is affected due to air contamination or water contamination. Before finalizing the scope of the analysis, refer to ACRS subcommittee meeting proceedings on the ABWR dated June 1, 1988. It is noted that the above information is to be included in Appendix 15B of the SSAR which will be submitted at a later date. However, the evaluation of the functional design of the reactivity control systems cannot be completed until this information is provided. (4.6)

Response 430.1

A FMEA for the CRDS was submitted by March 31, 1989. The scope of CRDS FMEA includes appropriate consideration of the June 1, 1988 ACRS subcommittee meeting proceedings.

Question 430.2

Regarding Reactor Coolant Pressure Boundary (RCPB) leakage detection systems, provide information on the following: (5.2.5)

(1) Describe how the leakage through both the inner and outer vessel head flange seals will be detected and quantified.

(2) List the sources that may contribute to the identified leakage collected in the Reactor Building Equipment Drain Sumps.

(3) Describe how potential intersystem leakages will be monitored for the 1) Low Pressure Coolant Injection System, 2) High Pressure Core Spray System, 3) Reactor Core Isolation Cooling System (RCIC)—Water side and 4) Residual Heat Removal System Inlet and discharge sides. Your response should include “all” the applicable (for the ABWR design) systems and components connected to the Reactor Coolant System that are listed in Table 1 of SRP Section 5.2.5 and other systems that are unique to ABWR (except those that you have already discussed in SSAR Subsection 5.2.5.2.2, Item 11).

Response 430.2a

Subsection 5.2.5.2.1 (7), describes the reactor vessel head flange seal monitoring. Leakage through both inner and outer seals will be detected by “other” dry well leak detection

instrumentation. Such leakage, through both the inner and outer head flange O-ring seals would be detected principally by increases in drywell floor drain sump pumping activities and in the water level of the floor drain sump. Also, increases in the drywell air cooler condensate flow and in the drywell ambient temperature will be indicated.

However, without any further data, none of these “other” drywell leak detection methods can specifically identify the leakage as coming from the failure of the O-rings at the vessel head flange seal. That is, these other methods would only indicate an increase of unidentified leakage into the drywell.

Leakage through only the inner reactor vessel head flange seal is detected and can be identified by monitoring the increase in pressure measured between the two O-ring seals. The leakage amount cannot, however, be quantified, as long as the outer O-ring seal maintains its integrity and the manual valve in the drain line to the drywell equipment drain sump remains closed.

Assuming that leakage through the inner O-ring seal has occurred prior to any subsequent leakage through both the inner and outer vessel head flange seals (a reasonable assumption), then the potential exists to both identify and quantify leakage through both seals of the reactor vessel head flange. The leakage through the inner seal would have been previously identified by the increase in pressure being monitored between the two O-ring seals. Both an alarm and measurement indication of pressure are provided in the control room.

Any subsequent loss of integrity of the outer O-ring seal (assuming that loss of integrity of the inner O-ring seal had previously occurred) should at this time result in additional alarms indicating an increase of unidentified leakage into the drywell. This new unidentified leakage can be quantified. Also, at the same time, these should be a marked, noticeable drop in the value of the pressure being monitored between the inner and outer O-ring seals and this pressure drop would be indicated in the control room.

Thus, by correlating past versus current drywell leakage information, leakage through both the inner and outer vessel head flange seals could be both detected, identified and quantified.

Response 430.2b

For the ABWR, the reactor building equipment drain sumps are also designated as reactor building low conductivity waste (LCW) sumps. Reactor building floor drain sumps are also designed as reactor building high conductivity waste (HCW) sumps.

Sources that may contribute to the identified leakage collected in the reactor building equipment drain sumps include the following examples:

(1) RCIC, RHR A, B&C and HPCF B&C pump shaft seal drains

(2) RCIC barometric condenser vacuum tank relief valve discharge

(3) RCIC turbine and pump lube oil cooling line relief valve discharge

(4) RHR A, B & C and HPCF B&C pump seal vent and pump suction vent discharges (upon opening valves to allow discharge)

(5) RHR heat exchanger drains

(6) Valve stem packing drains via return from valve gland leakage treatment system drain lines

(7) Process piping vent, leak tightness test and sample drain lines

(8) CRD system pumps drain and vent lines

(9) CRD System high point vent and low point drain lines

(10) CRD system filter drains and vents

(11) CRD system pump suction and purge water heater pressure relief valve drains

(12) HCU equipment drains

Response 430.2c

Items 5, 6, and 7 of Table 1.II (BWR) of SRP Section 5.2.5 were already discussed in Subsection 5.2.5.2.2(11). Item 4 of Table 1.II is not applicable to the ABWR.

For all other items (i.e., 1, 2 and 3) of Table 1.II of the SRP, any potential intersystem from the RCPB that might be applicable to the ABWR would have to be postulated to occur as leakage through closed check valves and/or closed containment isolation valves.

For the water side of the reactor core isolation cooling (RCIC) system of the ABWR, i.e., item 3 of Table 1.II of the SRP, RCIC inlet suction flow is drawn from the condensate storage tank (or from the suppression pool) and not from the reactor coolant system pressure boundary. During RCIC operations, the RCIC discharge flow would be through the low point check valve in the RCIC piping, through the RCIC injection valve, and then through another RCIC check valve before flowing into feedwater line B upstream of the outboard isolation check valve of feedwater line B.

When the RCIC turbine driven pump is not running, the RCIC discharge piping down to the lowpoint RCIC check valve is filled with water. Between the outlet of the low point check valve and the closed RCIC injection valve, the RCIC piping is maintained full of water from the condensate makeup water system through two check valves interfacing this section of RCIC piping. Any potential intersystem leakage into the RCIC piping system resulting from leakage through closed RCIC check valves or the closed RCIC injection valve would be from the feedwater system or condensate makeup water system and not from the RCPB.

Thus item 3 of Table 1.II of the SRP is also not considered as being applicable to the ABWR, as the RCIC-water side discharge is through feedwater line B and is not considered as being directly connected to the reactor system pressure boundary.

It should be noted, however, that there are test points and test valves that are provided in the RCIC system piping that are located both between the inner (low point) RCIC check valve and the RCIC injection valve and between the injection valve and the outer RCIC check valve, that are intended to be used to specifically test for the leak tightness of these three RCIC valves.

Item 2 of Table 1.II of the SRP addresses the inlet and discharge line components of the residual heat removal (RHR) system that are connected to the reactor coolant system.

For ABWR, the inlet RHR pump suction line of each of the three RHR subsystems, i.e., RHR subsystems A, B and C, is connected to the reactor coolant system by piping, through an RHR shutdown cooling line suction valve and through both an outboard and an inboard containment isolation valve. These suction lines, for each RHR subsystem, are used only the shutdown cooling mode of operation. During most reactor operations, the shutdown cooling mode suction line suction valves are keylocked in the closed position and the outboard and inboard containment isolation valves in the three shutdown cooling mode suction lines are all closed by high reactor pressure isolation signals.

For normal lineup of RHR suction, for all three RHR subsystems, the RHR suction lines are also connected by piping through normal RHR pump suction valves to the suppression pool. The three normal RHR pump suction valves are keylocked in the open position such that the normal suction for the RHR pumps is from the suppression pool and not from the reactor coolant system pressure boundary. This normal RHR lineup supports the low pressure core flooder (LPCF) mode of operation of the three RHR subsystems.

Potential intersystem leakage from the reactor coolant system into the inlet or suction side of the three RHR subsystems can thus only occur through the shutdown cooling mode suction piping. Such intersystem leakage can only be postulated to result from leakage through three closed valves in each of the three RHR subsystems shutdown cooling mode suction lines. That is, for each RHR subsystem, leakage through both closed inboard and closed outboard containment isolation valves and then through the keylocked closed shutdown cooling mode suction valve.

For each RHR subsystem, a test point and test valves are located between the inboard and outboard containment isolation valves of the shutdown cooling mode RHR pump suction lines to be used to specifically test for the leak tightness of the inboard containment isolation valves. Leakage through both containment isolation valves would be detected by pressure sensors located between the outboard containment isolation valve and the keylocked closed RHR shutdown cooling mode suction valve. High pressure in this section of piping would result in a control room alarm. Significant pressurization at this section of piping, resulting from

postulated intersystem leakage through the containment isolation valves, would be discharged to the suppression pool via pressure relief valves.

For the ABWR, the RHR system discharge or injection lines are used by all three RHR subsystems to return flow to the reactor for both the shutdown cooling mode of operation or the LPCF mode of operation. The discharge lines of the three RHR subsystems are normally kept full of water up to the injection valves by RHR discharge line fill pumps A, B and C. Suction flow for filling the discharge lines is drawn from the suppression pool and not from the reactor coolant system.

Only the RHR subsystem B and subsystem C discharge lines communicate directly with the Reactor Coolant System pressure boundary. The RHR subsystem A discharge is not directly to the reactor coolant system pressure boundary but rather such discharge (whether for shutdown cooling mode of operation or for the LPCF mode of operation) is through RHR subsystem A injection valve (normally closed) and through RHR subsystem A check valve (normally closed) into feedwater line A.

Thus potential intersystem leakage from the reactor coolant system is only postulated to occur into RHR subsystems B and C discharge lines resulting from leakage through normally closed discharge check valves and normally closed injection valves of RHR subsystems B and C. Test points and test valves are located between the discharge check valves and the discharge injection valves of RHR subsystems B and C to be used to specifically test for the leak tightness of the discharge check valves and injection valves (both normally closed). Substantial leakage through the discharge check valve and closed injection valve of either RHR subsystem B or C would result in pressurization of the discharge lines which would lead to a control room alarm. Significant pressurization of the discharge piping of RHR subsystems B or C, resulting from postulated intersystem leakage, would be discharged to the suppression pool via pressure relief valves.

Item 1 of Table 1.II of the SPR addresses the components of the safety injection systems that are connected to the Reactor Coolant System.

For the ABWR, the low pressure safety injection system is the low pressure core flood (LPCF) mode of the RHR system. The connections between the reactor coolant system and the discharge lines at the RHR subsystems were previously discussed above. In the LPCF mode of operation of the RHR subsystems, inlet suction flow is drawn from the suppression pool and not from the reactor coolant system.

For the ABWR, the high pressure safety injection system consists of the two high pressure core flood (HPCF) systems B and C (and also RCIC which was previously discussed). There is no connection between the reactor coolant system and the inlet suction of HPCF systems B and C. Both systems draw their suction flow from the condensate storage tank (or the suppression pool) and not from the reactor coolant system.

The discharge lines of HPCF systems B and C connect to the reactor coolant system through discharge check valves and injection valves. Potential intersystem leakage from the reactor coolant system is only postulated to occur into HPCF systems B and C discharge lines resulting from leakage through normally closed check valves and normally closed injection valves. Test points and test valves are located between the discharge check valves and the injection valves of HPCF systems B and C to be used to specifically test for the leak tightness of the discharge check valves and the normally closed injection valves.

Normal lineup for both HPCF systems B and C is through normally open suction valves connected to the condensate storage tank. These suction lines will be filled with water down to the condensate storage tank suction check valves. The discharge lines for HPCF systems B and C are maintained full of water with water sourced from the makeup water system (condensed). Substantial (potential) leakage from the reactor coolant system through closed discharge check valves and closed injection valves into either HPCF B or C discharge lines would result in pressurization of both the discharge line and the HPCF pump suction line which would lead to a control room alarm indicating high HPCF B (or C) pump suction pressure. Significant pressurization of the suction piping for either HPCF pump B or C, resulting from postulated intersystem leakage, would be discharged to the suppression pool via a pressure relief valve.

Question 430.3

Discuss compliance of reactor coolant leak detection systems with Regulatory Guide (RG) 1.45, “Reactor Coolant Pressure Boundary Leakage Detection Systems”, Positions C4, C5, C6, C8, and C9 with respect to the following items: (5.2.5)

(1) Indicators for abnormal water levels or flows in all the affected areas in the event of intersystem leakages.

(2) Sensitivity and response time of leak detection systems used for unidentified leakages outside the drywell.

(3) Qualification relating to seismic events for drywell equipment drain sump monitoring system and leak detection systems outside the drywell.

(4) Testing Procedures - Monitoring sump levels and comparing them with applicable flow rates of fluids in the sumps.

(5) Inclusion of reactor building and other areas floor and equipment drain sumps in ABWR Technical Specifications for leak detection systems.

Note that a few of the questions above arise because in Subsection 5.2.5.4.1 you state that the total leakage rate includes leakages collected in drywell, reactor building and other area floor drain an equipment drain sumps.

Response 430.3

As noted above, several questions arose because in Subsection 5.2.5.4.1 it was stated that:

> "The total . . . leakage rate consists of all leakage, identified and unidentified, that flows to the drywell, reactor building and other area floor drain and equipment drain sumps."

The italicized wording was incorrectly included with the text of Subsection 5.2.5.4.1. Subsection 5.2.5.4.1 has been revised accordingly.

Historically, total leakage rate limit, as established by Plant Technical Specifications, have been associated only with the potential leakage into the reactor primary containment (drywell) as collected by the drywell floor and equipment drain sumps and as monitored by different drywell leakage detection systems, e.g., drywell atmosphere (gaseous and/or particulate) radioactivity monitoring, drywell sump/level monitoring and drywell air coolers condensate flow monitoring. Also, the recommendations and regulatory positions of Regulatory Guide (RG) 1.45 have been interpreted in the past as applying only to reactor coolant leakage into the primary containment. RG 1.45 Positions C1, C2 and C3 specifically address leakage to the primary reactor containment and indication of leakage to the containment.

Response 430.3a

This questions addresses compliance with RG 1.45 Position C4 which recommends that provisions should be made to monitor systems connected to the RCPB for signs of intersystem leakage and also suggests that monitoring and indicators to show abnormal water level or flow in the affected areas. Specifically, this questions requests discussion of compliance with RG 1.45 Position C4 with respect to the "indicators for abnormal water level or flows in all the affected areas in the event of intersystem leakages."

As indicated in the Subsection 5.2.5.9 discussion that is related to RG 1.45: compliance, radiation monitoring of the reactor building cooling water coolant return lines from the RHR, RIP, CUW and FPC heat exchangers is the monitoring method used for determining potential intersystem leakage from the RCPB within these heat exchangers.

Also, in the discussion related to the response to part C of Question 430.2, it is indicated that pressure monitoring (i.e., alarming of abnormally high pressure) was the monitoring method utilized for determining potential intersystem leakage into the other systems connected to the RCPB that are listed in Table 1.II of the SRP.

Since all potential intersystem leakage from the RCPB for the ABWR would be into closed systems, normally filled with water (whether flowing or not), "indicators for abnormal water levels or flows" are not utilized in the ABWR leak detection systems.

Response 430.3b

This question apparently expands upon the RG 1.45 Position C5, which recommends that the sensitivity and response time of all leak detection systems addressed by RG 1.45 Position C3, i.e., those that are employed for unidentified leakage into the primary reactor containment, should be adequate to detect a leakage rate, or its equivalent, of one gpm in less than one hour.

This question requests discussion of the sensitivity and response time of leak detection systems used for unidentified leakage "outside" the drywell.

For the ABWR, where the monitoring methods of the leak detection systems that are used for defecting unidentified leakages outside the drywell are the same as or similar to the methods used for detecting unidentified leakages inside the drywell (primary reactor containment), it is intended that leak detection systems outside the drywell will be designed for the same sensitivity and response time requirements as recommended by RG 1.45 Position C5, i.e. adequate to detect a leakage rate, or its equivalent, of one gpm within one hour. The sizing requirements for the reactor building floor drain sumps and for the number and capacity of the associated sump pumps are exactly the same as those required for the drywell floor drain sump and equipment drain sump and pumps.

Response 430.3c

This question is related to compliance with RG 1.45 Position. Specifically, it addresses the qualification related to seismic events for the drywell equipment drain sump monitoring system and the leak detection system outside the drywell.

Note first that, in the response to Question 430.5, it was indicated that all elements of the leak detection systems (both inside and outside the drywell), which must accomplish a safety function or whose failure could prevent accomplishment accomodate a SSE and remain functional, and such elements will be designated as Seismic Category I equipment.

For the ABWR, the drywell equipment drain sump monitoring system will be qualified for OBE and this meets RG 1.45 Position C6 requirements.

Response 430.3d

This question requests discussion of the compliance of the reactor coolant leak detection systems with Position C8 of RG 1.45 with respect to "Test Procedures—Monitoring sump levels and comparing them with applicable flow rates of fluids in the sumps."

The recommendations of RG 1.45 Position C8 have usually been interpreted as the "Testability" requirements placed upon the leak detection systems, i.e., the requirements related to Paragraph 4.10 of IEEE-279; Capability for Test and Calibration as per the RG 1.45 Section B discussion of Signal Correlation and Calibration.

"Testability", i.e., the ability to test for operability and the ability to calibrate, differs from "Testing Procedures". As was indicated in Subsystem 5.2.5.7, the Position C8 requirements of RG 1.45 are satisfied, as, per the requirements, the leak detection systems of the ABWR are "equipped with provisions to readily permit testing for operability and calibration during plant operations." The SSAR text provides example testing methods to show how provisions had been made to permit testing for operability and calibration during plant operations.

In the context of this question, "Testing Procedures" are those viable methods which can be used during reactor operations to confirm the operability of specific leak detection systems, or are the methods which, because of design features or provisions, can be used to confirm that adequate calibration has been maintained, e.g., by the cross comparing or correlation of the signal outputs from two or more leak detection systems.

As an example of provisions in the design, the sump design for the ABWR requires that the sumps be configured such that the sump volume increases as a function of water level in the ratio of 24 L/cm. The sump level monitoring is compatible with this sump configuration. By using sump pump timers, the rate at which a sump fills with reference to sump pump operations can determine the degree of abnormal leakage collected in the sump. Also, the rate of actual sump level change, which is also being monitored can determine the degree of abnormal leakage. Because of the required sump configuration, these two measures of the degree of abnormal leakage have a known correlation. As another example, the measurement of drywell air coolers condensate flow can be checked against sump level rate of change.

Similar examples of such "Testing Procedures" are methods as provided in Subsection 5.2.5.7 to show satisfaction or compliance with Position C8 requirements.

Response 430.3e

Part e of Question 430 apparently requests discussion related to compliance with RG 1.45 Position C8 with respect to the possible inclusion of new limiting conditions in the ABWR Technical Specifications for the leakage collected outside the drywell, i.e., unidentified and identified leakage collected in the reactor building and floor drain (HCW) sumps and equipment drain (LCW) sumps.

Such inclusion for the ABWR Technical Specifications is not being proposed. As indicated at the outset of this response, the statement in Subsection 5.2.5.4.1 has been revised.

Question 430.4

Clarify whether the RCIC makeup capacity is sufficient to provide also for main turbine stop valves. Also, clarify whether this leakage is included in the total leakage mentioned in Subsection 5.2.5.4.1.

Response 430.4

The RCIC system has sufficient capacity to account for this leakage. The total leakage mentioned in Subsection 5.2.5.4.1 does not account for this leakage.

Question 430.5

Clarify how Position C.2 of RG 1.29, "Seismic Design Classification" is met for all applicable leak detection systems (also include the leak detection systems outside the drywell). (5.2.5)

Response 430.5

All elements of the leak detection and isolation system (LDS) and supporting systems that must accomplish a safety function or whose failure could prevent accomplishment of a safety function will be designed to accommodate a SSE and remain functional. All such equipment will be designated as Seismic Category I equipment.

All LDS equipment related to isolating functions and all equipment of interfacing systems, either providing input signals to the LDS, or which receive LDS isolation signals and accomplish the safety functions related to isolating the reactor coolant pressure boundary (RCPB) or the primary containment vessel (PCV) will thus conform to Position C.2 of RG 1.29. Such conformance shall be applied to the LDS itself and to all systems which support the LDS in monitoring for leaks from the RCPB, internal to the drywell or external to the drywell, e.g., the nuclear boiler system and the process radiation monitoring system provide such support.

The LDS and associated safety systems will also conform to the RG 1.100 position related to satisfying requirements of IEEE 344. Note that RG 1.100 effects interfacing mechanical systems (e.g., the isolation valves and motor control centers, etc., of these systems) to a greater degree than it effects the LDS.

The airborne particulate radioactivity monitoring system of the LDS will also meet the guidelines of RG 1.45, Position C-6 and will be designed to remain functional when subjected to a SSE.

Question 430.6

Identify all the interface requirements relating to RCPB leakage detection systems. (5.2.5)

Response 430.6

There are no RCPB leakage detection system safety-related interfaces for the ABWR Standard Plant.

Question 430.7

In the SSAR section devoted to containment functional design, identify clearly those areas that are not part of the ABWR scope and provide relevant interface requirements. (6.2)

Response 430.7

There are no containment safety-related interfaces for the ABWR Standard Plant.

Question 430.8

With respect to the design bases for the containment: (6.2)

Question 430.8a

Discuss the bases for establishing the margin between the maximum calculated accident pressure or pressure difference and the corresponding design pressure or pressure difference. This includes the design external pressure, internal pressure, and pressure between subcompartment walls.

Response 430.8a

The containment pressure response to a postulated accident is divided into three different time periods: vent-clearing; short-term; and long-term. The most dynamic processes occur during vent clearing and result in a very rapid rise in containment pressure and the maximum differential pressure across the diaphragm floor. Because these processes are so dynamic, a margin of 30% between the maximum calculated pressure and the design pressure is specified for design purposes. The peak containment pressures are reached during the short-term period. For this time period a margin of 15% to the maximum calculated pressure is specified. This 15% margin is judged to be adequate, since the blowdown and containment response are relatively stable and predictable. The short-term maximum calculated pressure will bound the long-term pressure response.

The 30 and 15% margins described above are the same as those recommended by the Standard Review Plan.

Question 430.8b

Discuss the capability for energy removal from the containment under various single-failure conditions. State and justify the design basis single failure that affects containment heat removal.

Response 430.8b

The containment heat removal system, which comprises of three independent loops, has energy removal capability to keep the suppression pool temperature within the acceptable limits and other guidelines. The design basis of the heat removal system assumes a single failure of a RHR heat exchanger which is the most limiting single failure.

Question 430.9

The Standard Safety Analysis Report (SSAR) states that the analytical models used to evaluate the containment and drywell response to postulated accidents and transients are included in the General Electric Co. report NEDO-20533 and its supplement 1, entitled “The G.E. Mark III Pressure Suppression Containment Analytical Model”. Provide justification that these references are appropriate to use for the ABWR Containment design which is not specified as Mark III. Discuss the similarities and differences of the ABWR design to previously approved Mark II and Mark III designs as they relate to the containment and drywell responses to the postulated accidents and the analytical model used for the analyses. Include in the discussion the conservatism used in the model and assumptions, the applicable test data that support the analytical models, and the sensitivity of the analyses to key parameters. (6.2)

Response 430.9

The analytical models described in the NEDO-20533 are appropriate to calculate the ABWR (containment and drywell) short-term responses to postulated accidents. Though originally written for prediction of Mark III transients, these models, which simulate from first principles the transient conditions in the containment, can be adapted for the ABWR containment configuration. These models have the capacity to model the reactor pressure vessel, drywell,

vent systems, and wetwell (suppression pool and airspace). They are, therefore, adaptable to other containment configuration having the same basic components. Comparison of these analytical models with test data is described and contained in NEDO-20533. In calculating the ABWR containment responses to postulated accidents, these models are used with conservative modeling assumptions. These assumptions are described in Subsection 6.2.1.1.3.3.

The ABWR design, basically, utilizes combined features of Mark II and Mark III design, with the exception of a unique feature of two drywell volumes (upper and lower). The vent system is a combination of vertical (Mark II design) and horizontal (Mark III design) vent system, and the wetwell (suppression pool and airspace) is similar to Mark II. The above models have capabilities to predict the containment and drywell responses to the postulated accidents. The vent system (combined vertical and horizontal vents) can be modeled by employing appropriate vent loss coefficient values. The unique lower drywell feature of ABWR can be modeled by taking credit for transfer of a conservative fraction of the lower drywell contents into the wetwell airspace. Because the lower drywell is connected to the drywell connecting vents, the inert atmosphere in the lower drywell would not transfer to the wetwell until the peak pressure in the drywell is achieved.

Question 430.10

With regard to the design features of the containment: (6.2)

Question 430.10a

Provide general arrangement drawings for the containment structure.

Response 430.10a

The general configuration and the major dimensions of the containment are shown in Figure 3.8-18. The nomenclature for various part of the containment and the internal structures are shown in Figure 3.8-17. The horizontal cross-sections of the reactor building and the containment are shown in Figures 3.8-1 through 3.8-7; the vertical cross-sections are shown in Figures 3.8-10 and 3.8-11. The code jurisdictional boundary for various codes is shown in Figure 3.8-12.

Question 430.10b

Provide appropriate references to Section 3 of the SSAR which includes the information on the codes, standards, and guides applied in the design of the containment and containment internal structures.

Response 430.10b

The applicable codes, standards, and specifications applied in the design of the containment and internal structures are provided in the following subsections of Chapter 3

Item	Subsection
Concrete Containment	3.8.1.2
Steel Components of the Reinforced Concrete Containments	3.8.2.2
Concrete and Steel Internal Structures of the Concrete Containment	3.8.3.2

Question 430.10c

Discuss the possibilities of water entrapment inside containment and its effect on the accident analysis.

Response 430.10c

The ABWR containment unique design feature - lower and upper drywell volumes - has potential for some water entrapment inside containment. Water could be trapped in the lower drywell cavity and the wetwell equipment and personnel tunnel from two possible sources: (1) from the suppression pool drawdown through the suppression pool return path (see Figure 3.8-18) or (2) directly from the reactor pressure vessel (RPV). Effect of this possible water entrapment was considered as described below.

For the short-term response analysis which determines sizing of the suppression pool, water entrapment was not considered in the analysis. It was found that the short-term blowdown is practically over before the spill-over from the suppression pool through the return path starts. Any drawdown directly from the RPV to the lower drywell cavity will result in reduced pool heatup which, in turn, will require a smaller pool volume. Therefore, for conservatism, no water entrapment was considered in determining the minimum suppression pool volume required. For the long-term response analysis which determines maximum pool temperature rise, water entrapment was considered in the pool temperature response analysis. This is conservative since water entrapment reduces the suppression pool heat sink capacity and therefore maximizes the pool temperature rise.

Question 430.10d

Provide information on qualification tests that are intended to demonstrate the functional capability of the containment structures, systems and components. Discuss the status of any developmental tests that may not have been completed.

Response 430.10d

The structural integrity pressure test is discussed in Subsection 3.8.1.7.1. The preoperational and inservice integrated leak rate test is discussed in Subsection 6.2.1.6. The shop tests related to reinforced concrete containment vessel which were performed in Japan between 1981 and 1987 are listed below:

(I) Fundamental Test

(1) Transverse Shear

(2) Openings in RCCV

(3) Rebar Joints

(II) Partial Test

(1) Top slab

(2) Liner and liner anchors

(3) Diaphragm floor slab joint

(4) Penetrations

(III)Total Test

(1) Large scale (1/6) model

All of the developmental tests are complete.

Question 430.11

Provide a detailed discussion of the likelihood and sensitivity to steam bypass of the suppression pool for a spectrum of accidents. Include in you discussion the following information: (6.2)

(a) A comparison of the ABWR pool bypass capability with that for Mark II and Mark III designs.

(b) The measures for minimizing the potential for steam bypass and the systems provided to mitigate the consequences of pool bypass. Discuss and demonstrate the conservatism of assumptions made in the analysis of steam bypass.

(c) Identify all lines from which leakage (or rupture) could contribute to pool bypass and wetwell air space pressurization.

(d) Identify all fluid lines which traverse the wetwell air space and identify those lines which are protected by guard pipe.

(e) Discuss the rationale and basis for the wetwell spray flow capacity.

Response 430.11

The ABWR design uses a pressure suppression-type containment which is similar to that used in the Mark I, II, and III containment designs. In a pressure suppression-type containment, any steam released from the primary system following a postulated LOCA will be condensed by the suppression pool. However, the potential exists for steam to bypass the suppression pool through leakage paths between the drywell and the wetwell airspace. The steam from the drywell leaking directly into the wetwell airspace would produce pressurization of the ABWR containment as is the case for the other (Mark II and III) containment designs.

Large primary system ruptures generate high pressure differentials across the assumed leakage path which, in turn, give proportionally higher leakage flow rates. However, large breaks also rapidly depressurize the reactor and terminate the blowdown. As the size of the assumed primary system rupture decreases, the magnitude of the differential pressure across any leakage path also decreases. Small breaks, however, result in an increasingly longer reactor blowdown period, which in turn, results in longer durations of the leakage flow. The limiting case is a very small reactor system break which will not automatically result in reactor depressurization. For larger breaks the maximum allowable area of the leakage path is larger, since leakage into the wetwell airspace is of limited duration.

The ABWR containment design has a steam bypass capability for small breaks of the order of 46.45 cm^2 $A/K^{1/2}$, same as for the Mark II plants.

For a given drywell-to-wetwell pressure differential, the steam bypass flow rate will depend only on $A/K^{1/2}$, where A is flow area of leakage paths and K is geometric and friction loss coefficient. Smaller breaks in the primary system piping are expected to result in more severe bypass flow rates compared to that from large breaks. Though large breaks generate high pressure differentials across the leakage paths (giving proportionately higher leakage flow rates), they also rapidly depressurize the reactor and terminate the blowdown. Once this has occurred, there will no longer be a pressure differential across the drywell leakage path, so that leakage flow and wetwell pressurization will cease. As the size of the assumed primary system rupture decreases, the magnitude of the differential pressure across any leakage path also decreases. However, smaller breaks result in an increasingly longer reactor blowdown period, which, in turn, results in longer duration of the bypass leakage flow.

To mitigate the consequences of any steam which bypasses the suppression pool, the ABWR containment design provides wetwell sprays to quench steam bypassing the suppression pool. The containment has a steam bypass capability of 46.45 cm^2 $A/K^{1/2}$ and the containment design requires a measured bypass leakage less than 10% of this bypass capability, consistent with guidelines provided in SRP 6.2.1.1.C. The fact that the measured leakage is not exceeded will

be verified by periodic tests in accordance with the guidelines and requirements in Appendix J of 10CFR50.

The ABWR containment structure design includes a steel liner on its primary containment boundary to minimize drywell-to-wetwell leakage path. Except SRV discharge lines, there are no other fluid lines which traverse the wetwell air space. The ABWR design will preclude rupture of SRV discharge lines inside the wetwell airspace and, hence, these lines will not be equipped with guardpipe.

The primary purpose of the wetwell spray system (manually operated) is to provide mitigation for adverse consequences of the steam bypass. The basis for wetwell spray flow capacity (31.5 L/sec) is to assure that the maximum containment pressure due to pool bypass does not exceed the containment design pressure.

The primary purpose of the wetwell spray system (manually operated) is to provide mitigation for the adverse consequences of the steam bypass. The basis for the wetwell spray flow capacity (31.5 L/sec) is to assure that the maximum containment pressure due to pool bypass does not exceed the containment design pressure.

Question 430.12

With regard to containment response to external pressure: (6.2)

Question 430.12a

Describe the wetwell-to-drywell vacuum breaker system and show the extent to which the requirements of Subsection NE of Section III of the ASME B&PV Code are satisfied. Discuss the functional capability of the system. Provide the design and performance parameters for the vacuum relief devices.

Response 430.12a

The wetwell-to-drywell vacuum breaker system (WDVBS) is safety-related consisting of eight (8) 50.8 mm vacuum breaker valves. Seven valves are required to open to provide an effective flow area adequate to keep the differential pressure between the drywell and wetwell within the negative design value of 13.7 kPa during all operating and accident transients. Therefore, the system design accounts for the single failure case in which one valve fails to open. Each vacuum breaker valve shall open fully within 1.0 second (start to open at a pressure differential of 13.7 kPa and fully open at 3.43 kPa.

The vacuum breaker valves shall be installed on the RPV pedestal in separate penetrations from the lower drywell to the suppression chamber airspace, with one valve per penetration. The vacuum breaker valves shall be swinging disk valves which will be actuated by the differential pressure across the valve ports. No external power shall be utilized to open the valves. Valves shall be capable of being manually operated and remotely operated with air operated piston to verify the movement of valve disk. The valve shall be supplied with a position indicator switch in the control room that will permit remote indication of valve position in control room.

Question 430.12b

Discuss the basis for selecting a low design capability for external pressure acting across the drywell to wetwell boundary. It is not apparent that the drywell negative design pressure of 2.0psid is desirable or sufficient.

Response 430.12b

The drywell negative design pressure of 13.7 kPa is specified mainly for designing the steel liner. The ABWR primary containment vessel (PCV) is a steel-lined reinforced concrete containment vessel (RCCV). The main purpose of steel liner is to provide the leaktightness required. This design value of 13.7 kPa, which has also been specified for the Mark II design, is judged to be adequate based on the experience for the Mark II plants.

Engineering analyses were performed (with no vacuum breakers) to calculate the negative differential pressure between the wetwell and the reactor building. All possible wetwell depressurization events which may result in the negative differential pressure were considered, and analyses were conducted for the limiting transient event. The negative differential pressure was determined to be 12.8 kPa, which is below (by 10%) the negative design pressure of 13.7 kPa.

Question 430.12c

The margin between the calculated wetwell-to-reactor building negative differential pressure (-1.8 psid) and the design differential pressure (-2.0 psid) is not considered adequate. A higher margin of 15% should be provided at this stage of the design. Further, given the reliance of the BWR pressure suppression design on containment venting to control pressure, discuss the basis for not providing wetwell to reactor building vacuum breakers.

Response 430.12c

Experience indicates that a margin of 10% between the calculated and the design differential pressure should be adequate. As noted in response to Part b of this question this design pressure is for the steel liner and this is not a load carrying component to provide structural integrity of the primary containment boundary. The reinforced concrete walls (about 1.8m thick) are the main load carrying components whose design is controlled by the internal design pressure 313.8 kPaG which is carried by rebar. The concrete walls (are not vulnerable) are subjected to compression under the 13.7 kPa negative design pressure. Therefore, it is not necessary to provide wetwell to reactor building vacuum breakers.

Question 430.12d

In the analysis of wetwell-to-reactor building negative differential pressure calculation, a 500 gpm wetwell spray flow rate was used. Provide the basis for the assumption and the design basis for the wetwell spray capacity.

Response 430.12d

See response to Question 430.11e.

Question 430.13

Section 6.2.1.1.3 of the SSAR states that the containment functional evaluation is based upon the consideration of several postulated accident conditions including small break accidents. Provide the assumptions, analysis and results of the small break accidents considered, and demonstrate that the identified (in the SSAR) feedwater line and steam line breaks are the limiting accidents.

Response 430.13

Figures 20.3.2-11a through 20.3.2-11f demonstrate that the maximum drywell pressure occurs during feedwater line break accident, and the maximum drywell temperature condition would result from a main steam line break accident. All of the analyses assume the primary system and containment system are initially at the maximum normal operating conditions.

Question 430.14

Provide analyses of the suppression pool temperature for transients involving the actuation of safety/relief valves. Provide the assumptions and conservatism employed in the analyses so that an assessment could be made for conformance to the acceptance criteria set forth in NUREG-0783, "Suppression Pool Temperature Limits for BWR Containments." (6.2)

Response 430.14

Suppression pool temperature analyses, for transients involving the actuation of safety relief valves (SRVs) to show conformance to NUREG-0783 are not required. Recent studies conclude that the pool temperature limit for SRV discharge is not necessary and may be eliminated. Results of these studies are documented in the GE Report NEDO-30832, Class I, December 1984. This report has been provided to the NRC Staff via BWR Owners Group letter, BWROG-8513, of March 21, 1985.

A temperature limit for BWR suppression pools during SRV discharge was specified in NUREG-0783. This limit was established because of concerns about unstable condensation and associated high loads on the containment structure at high suppression pool temperatures. The concern was raised because of experience in BWRs with prolonged SRV discharge without quencher devices. The NRC established the temperature limits in NUREG-0783 based on data available at the time it was issued in 1981. At that time sufficient data was not available to confirm that quenchers were effective in eliminating the unstable condensation loads.

Since NUREG-0783 was issued, scaling laws have been developed and confirmed for the discharge and condensation of steam in a suppression pool. Also, the subscale data base has been expanded over a range of pool temperatures up to saturation temperature with both straight pipe geometries and with quencher devices. The confirmation of the scaling laws and the expanded data base now provide strong support for the elimination of the pool temperature limit for SRV discharge with quenchers (T- and X- quenchers). For details, please refer to the GE Report NEDO-30832, Class I, December 1984, "Elimination of Limit on BWR Suppression Pool Temperature for SRV Discharge with Quenchers."

The ABWR design utilizes X- quencher discharge devices which are the same as that used for the Mark II and Mark III designs and evaluated in the recent study noted above. This study determined that the dynamic pressures (loads) due to SRV discharge decrease as the pool temperature approaches saturation temperature, and concluded that the pool temperature limit, specified in NUREG-0783, for SRV discharge is not necessary and may be eliminated.

Therefore, the acceptance criteria set forth in NUREG-0783 are not necessary and, hence, suppression pool transient analyses involving the actuation of SRVs are not needed.

Question 430.15
Provide the pressure at which the maximum allowable leak rate of 0.5%/day is quoted. (6.2)

Response 430.15
Response to this question is provided in revised Table 6.2-2.

Question 430.16
Provide engineered safety systems information for containment response analysis (full capacity operation and capability used in the containment analysis), as indicated in Table 6-7 of Regulatory Guide 1.70, Revision 3. (6.2)

Response 430.16
Response to this question is provided in revised Subsection 6.2.1.1.3.2 and new Table 6.2-2a.

Question 430.17
In the design evaluation section for containment subcompartments (Section 6.2.1.2.3), provide the information necessary to substantiate your assessment that the peak differential pressures do not exceed the design differential pressure. Guidance for the information required is provided in Regulatory Guide 1.70, Revision 3, Section 6.2.1.2., “Containment Subcompartments”, Design Evaluation.

Response 430.17
Response to this Question is provided in Table 6.2-3.

Question 430.18
Describe the manner in which suppression pool dynamic loads resulting from postulated loss-of-coolant accidents, transients (e.g., relief valve actuation), and seismic events have been integrated into the affected containment structures. Provide plan and section drawings of the containment illustrating all equipment and structural surfaces that could be subjected to pool dynamic loads. For each structure or group of structures, specify the dynamic loads as a function of time, and specify the relative magnitude of the pool dynamic load compared to the design basis load for each structure. Provide justification for each of the dynamic load histories by the use of appropriate experimental data and/or analyses.

Describe the manner by which potential asymmetric loads were considered in the containment design. Characterize the type and magnitude of possible asymmetric loads and the capabilities of the affected structures to withstand such a loading profile. (6.2)

Response 430.18

The pool dynamic loads such as vent clearing, pool swell, condensation oscillation, chugging, etc., resulting from postulated loss-of-coolant accidents and the pool dynamic loads associated with safety relief valve actuation during transients are to be found in Appendix 3B. The containment vessel, basemat, pedestal, access tunnels and quencher supports are subjected to these loads. In Appendix 3B, the time histories including magnitude and duration as well as spatial variation and distribution of these loads are specified. The seismic loads on the structures such as pedestal, containment vessel structure, etc., are to be found in Appendix 3G. The combinations of seismic loads OBE/SEE with pool dynamic loads for the containment design are in accordance with Tables 3.8-1, 3.8-5 and 3.8-6.

Question 430.19

Provide information to demonstrate that the ABWR design is not vulnerable to a safety relief valve discharge line break within the air space of the wetwell, coupled with a stuck open relief valve after its actuation as a result of the transient. (6.2)

Response 430.19

There is a high degree of assurance that the ABWR-SRVDL wetwell piping is not vulnerable to a safety relief valve discharge line break within the air space of the wetwell due to a stuck open relief valve. Pressure/temperature conditions in the discharge line during valve actuation have been analyzed and the calculated stresses and fatigue usage factors for all the load combinations which include the stuck open valve loads were within code allowables. This provides confidence that the combination of discharge line failure and valve actuation is a very low probability event and is not a significant issue for the containment. The design and analysis of the wetwell piping is briefly described below.

Materials—

(1) Corrosion Resistance

The material selected for the air space piping is 316 stainless steel with.05% max carbon. This material is resistant to corrosion in the high humidity of the wetwell and also has high resistance to intergranular stress corrosion.

(2) Non Ductile Fracture

Stainless steel is not subject to non ductile failure, a concern with some grades of carbon steel.

Design and Analysis—The wetwell piping was designed and analyzed to ASME class 3 requirements. All known (postulated) loading conditions were evaluated in the stress analysis.

Protection against some specific potential failure modes is discussed below.

(1) Fatigue Failure by Thermal Expansion

Class 3 piping is safe for 7000 cycles of thermal expansion when the stress ratio is 1.0 or below. The maximum expansion cycles for any valve is only 1790 cycles and the stress ratio is below 0.8 which assures no fatigue failure.

(2) System Collapse Due to Weight Stress

The weight of the upper wetwell 250 mm piping is supported by the heavier 300 mm piping extending vertically down to the quencher. The stresses are far below the code allowable.

(3) System Collapse due to Dynamic Loads

The anchors and the lateral supports control the stresses due to dynamic loads at every location in the piping location within the code allowable stress limits.

Fabrication and Installation—

(1) Welds and Welding

To guard against fabrication defects, all welding and welding nondestructive examination is done to ASME class 3 requirements. This provides 100% radiography of the welds in the wetwell air space.

The number of welds in the wetwell air space was minimized by using bent pipe wherever possible. There are no longitudinal pipe welds due to the use of seamless pipe.

(2) Hydrotest

Following installation, the piping is hydrostatic tested to assure no leaks and demonstrate structural integrity.

Question 430.20

Discuss suppression pool water makeup under normal and accident condition. (6.2)

Response 430.20

Under normal conditions, make-up water to the suppression pool can be added by the suppression pool clean-up (SPCU) system. Suction is taken from the condensate storage pool (CSP) through a line that primarily supplies the high pressure core flooder (HPCF) system and the reactor core isolation cooling (RCIC) system. The SPCU pump outlet is piped to the suppression pool.

Under loss-of-coolant accident conditions the ECCS systems (HPCF and RCIC) take primary suction from the CSP and secondary suction from the suppression pool. Suction from the CSP is the preferred source of water. The containment accident response (pressure and temperature) analyses neglect this source of make up water for conservatism.

For post-accident suppression pool makeup or containment flooding, the HPCF system can take suction from the CSP and pump water through the HPCF suppression pool return line. This will provide makeup to the suppression pool or fill the containment to a water level consistent with containment design pressure. For the extreme situation where containment flooding is desired, additional water can be added to the CSP using fire hoses or another alternate source of water. For containment flooding the suppression pool is completely filled and the drywell flooded to the desired level.

Question 430.21

With respect to mass and energy release analyses for postulated loss-of-coolant accidents identify the sources of generated and stored energy in the reactor coolant system that are considered in the analyses of loss-of-coolant accidents. Describe the methods used and assumptions made in calculations of the energy available for release from these sources. Address the conservatism in the calculation of the available energy from each source. Tabulate the stored energy sources and the amounts of stored energy. For the sources of generated energy, provide curves showing the energy release rates and integrated energy release. (6.2)

Response 430.21

The energy released for postulated loss-of-coolant accidents is comprised of (1) the energy generated by fission product decay, and (2) stored energy in the reactor system. For short-term response analyses, ANS-5 decay heat curve plus 20% margin is used for added conservatism. The rate of release of core decay heat is provided in Table 20.3-2 as a function of time after accident initiation, and Table 20.3-3 provides integrated decay heat release rate. For long-term analyses ANS-5 decay heat curve with no added margin is used.

The sensible stored energy in the reactor coolant system is made available to the reactor coolant by modeling the heat sources as heat capacity modes in the analyses. Following each postulated accident event, the total stored energy is made available for transfer to the reactor coolant. An estimated total amount of available stored energy is about 211 GJ.

Question 430.22

In the SSAR sections devoted to containment heat removal systems, identify clearly those areas that may not be part of the GE scope and provide relevant interface requirements. (6.2)

Response 430.22

There are no containment heat removal system safety-related interfaces for the ABWR Standard Plant.

Question 430.23

The SSAR states that the containment heat removal system is designed to limit the long-term temperature of the suppression pool to 207°F. The calculated peak pool temperature is 206.46°F for the feedwater line break. With respect to this analysis provide the following information: (6.2)

Question 430.23a

The justification that this is the limiting accident with respect to the maximum temperature in the suppression pool.

Response 430.23a

In determining energy removal capability of the containment heat removal system, various potential bounding transient and accident event were analyzed. The events analyzed are:

(1) Potential Bounding Transients on Suppression Pool Temperature

- Inadvertent Open Relief Valve (IORV)
- Loss-of-Coolant Accident (LOCA) (whole spectrum of LOCAs)

(2) Normal Shutdown Cooling

(3) Emergency Shutdown Cooling

(4) Anticipated Transients Without Scram (ATWS)

A feedwater line break (FWLB), which is the largest liquid break, was determined to be the most bounding event for pool temperature response. Liquid breaks are expected to be more bounding than steam breaks, since liquid breaks are expected to result in pool drawdown. Pool drawdown will substantially reduce the heat sink capacity of the suppression pool.

Question 430.23b

The bases for the design margin between the design and calculated temperatures.

Response 430.23b

The wetwell design temperature is 103.9°C (see Table 6.2-1). The long-term pool temperature of 97.2°C is to assure sufficient net positive suction head (NPSH) for the pumps. The calculated peak pool temperature of 96.9°C demonstrates that the containment heat removal system has adequate energy removal capability.

Question 430.23c

All assumptions used in the analysis and conservatism associated with each. Include the effects of potential temperature stratification in the suppression pool and its effects on heat removal capability of the system.

Response 430.23c

Analysis assumptions are listed in subsection 6.2.1.1.3.3.1.2.

During the LOCA blowdown, there exists a potential for temperature stratification in the suppression pool. During this period most of the mass and energy is release to the pool through the top horizontal vents. As a result, the top portion of the pool will be heated more than the lower portion. The temperature in the lower part of the pool where the RHR suction is located can be expected to be lower than the bulk pool temperature thus, the heat removal through the RHR heat exchanger may be less than that expected if a uniformly mixed pool temperature at the RHR suction is assumed.

The long-term pool temperature analyses assume a well mixed uniform suppression pool temperature. It is believed that the location of the RHR suction and return lines in the suppression pool, and other conservatisms in the analyses will more than offset the effect of potential pool stratification. The RHR suction and return line configuration will be designed (similar to Mark III design) to provide adequate pool mixing and reduce the pool thermal stratification. The long-term analyses conservatively model and use a lower than expected suppression pool volume; no credit for heat sinks in the drywell and wetwell; and no credit for the ECCS suction from the condensate storage pool. Furthermore, based on design practices, the RHR heat exchanger thermal performance is considerably better than the design minimum.

Question 430.23d

The identification of the decay heat curve used in the analysis.

Response 430.23d

ANS-5 decay heat curve.

Question 430.24

Provide the design bases for the spray features of the containment heat removal system. Provide the safety classification of the components associated with the spray feature of the system. (6.2)

Response 430.24

The drywell spray performs iodine removal which is not a NRC requirement. The drywell spray design is based on Japan Atomic Energy Research Institute (JAERI) testing. JAERI has tested the iodine capability of PCV spray with $0.1 < F/V < 0.4$ and have determined that, as a minimum, this range is acceptable,

where F = spray flow rate, m^3/h
V = free air volume (drywell), m^3

For ABWR $\frac{F}{V} = \frac{840}{7350} = 0.11$, which is within the acceptable range.

The design bases for the wetwell spray is provided in the Response to Question 430.11.

Both wetwell and drywell spray headers are located inside the primary containment vessel and are classified as Safety Class 3.

Question 430.25

Discuss the rationale for continued reliance on sprays as the sole active engineered safety feature for drywell atmosphere pressure and temperature. Discuss the merits of upgrading the design of drywell fan coolers to provide some capacity for pressure, temperature, and humidity control following an accident. (6.2)

Response 430.25

The ABWR containment design does not require nor does it rely upon sprays for controlling drywell pressure and temperature below their design values following design basis loss-of-coolant accident (LOCA) conditions. The primary design objective of the drywell sprays (initiated by operator action) is to provide removal of the fission products released in the drywell during LOCA. As an option, drywell sprays can be utilized in controlling equipment environmental conditions in the drywell.

The ABWR drywell cooling system design is non-safety grade. Upgrading the design to safety to provide some capacity for controlling drywell thermodynamic conditions following an accident is not regarded as cost effective. Control of drywell conditions through the suppression pool cooling (RHR heat exchangers) is an order of magnitude more effective in overall containment heat removal than the drywell cooling system. It is not necessary to have the drywell cooling system available for controlling conditions in the drywell following an accident. The RHR heat exchangers have adequate heat removal capability.

In order to upgrade the drywell cooling system to safety grade, extensive design modification will be required. The entire cooling system (cooling units, piping, ducts, source of cooling water, etc) design will be required to withstand seismic loads and other loads due to a high energy pipe break. In addition, this upgrading will require an increase in the emergency diesel generator capacity. Considering that it is not necessary to have the drywell cooling system available following an accident and the upgrading requires extensive design modifications, it is concluded that there is no technical merit in upgrading the drywell fan coolers.

Question 430.26

The time period assumed for initiation of the containment heat removal system after a LOCA is 10 minutes requiring operator action. It is the staff's position that this time period is too restrictive. In fact previous BWR designs (Grand Gulf's Mark III) use 30 minutes actuation time. Provide the reasons why the ABWR does not provide more flexibility with respect to the time required for actuation. (6.2)

Response 430.26

Response to this question is provided in revised Subsections 6.2.1.1.3.3.1.2, 6.2.2.2 and 6.2.2.3.1. In addition, the following clarification is provided.

For the RHR response to a LOCA, 10 minutes was assumed as the time following the LOCA initiation when containment cooling is initiated. The ABWR RHR is designed with its heat exchanger always in series with the pump. As soon as RHR injection flow initiates after depressurization the RHR heat exchanger is in the flow path and cooling the water. For a large break depressurization can occur in 3 to 5 minutes, at which time containment cooling begins as RHR injection starts. For the large break analysis, 10 minutes was conservatively assumed as the start of containment cooling.

The question mentioned the previous Grand Gulf design. Unlike the ABWR, the Grand Gulf design required operator action to perform valve alignment to bring the RHR heat exchanger into the flow path to initiate containment cooling.

The ABWR design requirement for core cooling is that the ECCS shall be completely automatic in operation (i.e., no operator action required) for at least 30 minutes following a LOCA.

Question 430.27

Describe the design features of the suppression pool suction strainers. Specify the mesh size of the screens and the maximum particle size that could be drawn into the piping. Of the systems that receive water through the suppression pool suction strainers under post accident conditions, identify the system component that places the limiting requirements on the maximum size of debris that may be allowed to pass through the stainers and specify the limiting particle size that the component can circulate without impairing system performance. Discuss the potential for the strainers to become clogged with debris. Identify and discuss the kinds of debris that might be developed following a loss-of-coolant accident. Discuss the types of insulation used in the containment and describe the behavior of the insulation during and after a LOCA. Include in your discussion information regarding compliance with the acceptance criteria associated with USI A-43 as documented in NUREG-0897. (6.2)

Response 430.27

The strainers are sized to satisfy pump NPSH pressure drop requirements while being 50% plugged.

The strainers and mesh are designed to prevent passage of particles larger than a certain size, as determined by the pump design requirements, to prevent clogging the ECCS main pump cyclone separators or seal cooling water orifices.

The ECCS suction strainers are designed to block passage of debris which could potentially degrade the performance of these systems while considering the potential plugging effects of suppression pool debris, especially under post-LOCA conditions.

The ECCS suctions strainers are designed and located so that, considering the type and amount of pool debris, they will not become so plugged during the post-LOCA operating period as to result in degraded performance of these systems.

Containment protective coatings are required to withstand radiation, temperature and pressure, and not flake to present problems of plugging ECCS suction strainers in the suppression pool.

Primary system piping and reactor vessel insulation are designed to minimize adverse effects on containment function following a LOCA.

For each postulated break location, the type and extent of insulation debris are estimated and evaluated for the debris' effect on the potential plugging of the drywell connecting vents and for potential suction strainer plugging in the suppression pool.

The mesh size to have a dimension on one side of approximately 1.5 mm. This size is to protect the ECCS pump cyclone separators.

Metal pipe insulation is used where ISI (in service inspection) of welds is performed. The metal insulation will sink in the pool.

The major pipe insulation material is potentially calcium silicate, which will float for a very short time and then sink in the pool.

The vents from the drywell to the wetwell are provided with screens to block pipe insulation or other debris from entering the wetwell.

Suppression pool suction strainer compliance with the acceptance criteria associated with USI A-43 is addressed in Appendix 19B.

Question 430.28

Provide analyses of the net positive suction head (NPSH) available to the RHR pumps in accordance with the recommendations of Regulatory Guide 1.1. Compare the calculated values of available NPSH to the required NPSH of the pumps. (6.2)

Response 430.28

Response to this question is provided in revised Subsection 6.2.2.3.1 and new Table 6.22b.

Question 430.29

In SSAR Section 6.2.3, identify clearly those areas that may not be part of the ABWR scope and provide relevant interface requirements.

Response 430.29

There are no secondary containment safety-related interfaces for the ABWR Standard Plant.

Question 430.30

Provide a tabulation of the design and performance data for the secondary containment structure. Provide the types of information indicated in Table 6-17 of Regulatory Guide 1.70, Revision 3. (6.2)

Response 430.30
Response to this question is provided in new Table 6.2-2d.

Question 430.31
Describe the valve isolation features used in support of the secondary containment. Specify the plant protection system signals that isolate the secondary containment and activate the standby gas treatment system. (6.2)

Response 430.31
The plant protection signals that automatically isolate the secondary containment and activate the SGTS are:

(1) Secondary containment high radiation signal.

(2) Refueling floor high radiation signal.

(3) Drywell pressure high signal.

(4) Reactor water level low signal.

(5) Secondary containment HVAC supply/exhaust fans stop.

Isolation of the secondary containment is accomplished by closure of the secondary containment HVAC supply/exhaust line ducts which pass through the secondary containment boundary. The HVAC isolation valves consist of two valves in series in each of the supply/exhaust lines. These valves are air-operated, normally-open, fail closed butterfly valves.

Further details are provided in Subsection 6.2.3, 9.4.5.1 and Section 6.5

Question 430.32
Identify and tabulate by size, piping which is not provided with isolation features. Provide an analysis to demonstrate the capability of the Standby Gas Treatment System to maintain the design negative pressure following a design basis accident with all non isolated lines open and the event of the worst single failure of a secondary containment isolation valve to close. (6.2)

Response 430.32
Response to this question will be provided in revised Subsection 6.5.1.3.1 and new Subsection 6.5.5.1.

Question 430.33
Discuss the design provisions that prevent primary containment leakage from bypassing the secondary containment standby gas treatment system and escaping directly to the environment. Include a tabulation of potential bypass leakage paths, including the types of information indicated in Table 6-18 of Regulatory Guide 1.70, Revision 3. Provide an evaluation of potential bypass leakage paths considering equipment design limitations and test sensitivities.

Specify and justify the maximum allowable fraction of primary containment leakage that may bypass the secondary containment structure. The guidelines of BTP 6-3 should be addressed in considering potential bypass leakage paths. (6.2)

Response 430.33

The secondary containment completely surrounds the primary containment except at the basemat. In addition the lower third of the secondary containment is surrounded by soil, thereby reducing leakage paths. No measurable leakage is expected through its walls except at penetrations. The secondary containment will be maintained at subatmospheric conditions to prevent leakage from bypassing the secondary containment. Only valve leakage through process piping can bypass the secondary containment. This leakage will be monitored via the containment leakage test type C on the outboard containment isolation valves. The secondary containment leak rate calculation is provided in the response to Question 430.52c.

Question 430.34

Provide a list of the secondary containment openings and the instrumentation means by which each is assured to be closed during a postulated design basis accident. (6.2)

Response 430.34

Response to this question is provided in revised Subsection 6.2.3.2 and new Table 6.2-9.

Question 430.35

Provide a table of design information regarding the containment isolation provisions for fluid system lines and fluid instrument lines penetrating the containment which are within the GE scope of the ABWR design. Include as a minimum the following information:

(1) General design criteria or regulatory guide recommendations that have been met or other defined bases for acceptability;

(2) System name;

(3) Fluid contained;

(4) Line size;

(5) ESF system (yes or no);

(6) Through-line leakage classification;

(7) Reference to figure in SSAR showing arrangement of containment isolation barriers;

(8) Location of valve (inside/outside containment);

(9) Type C leakage test (yes or no);

(10) Valve type and operator;

(11) Primary mode of valve actuation;

(12) Secondary mode of valve actuation;

(13) Normal valve position;

(14) Shutdown valve position;

(15) Post accident valve position;

(16) Power failure valve position;

(17) Containment isolation signals;

(18) Valve closure time; and

(19) Power source. (6.2)

Response 430.35
Response to this question is provided in new Table 6.2-7.

Question 430.36
For isolation valve design in systems not within the ABWR scope, identify the systems and the relevant interface requirements. Include a discussion on essential and non-essential systems per Regulatory Guide 1.141 and the means or criteria provided to automatically isolate the nonessential systems by a containment isolation signal. Also, include a discussion on the requirement that the setpoint pressure which initiates containment isolation for nonessential penetrations be reduced to the minimum value compatible with normal operations. (6.2)

Response 430.36
All isolation valves are within the scope of the ABWR Standard Plant.

Question 430.37
Specify all plant protection signals that initiate closure of the containment isolation valves. (6.2)

Response 430.37
A summary of the plant protection signals that initiate closure of the containment isolation valves is provided below:

(1) Reactor vessel water level (1-1/2, 2 or 3)

(2) Reactor pressure high

(3) MSL turbine area high amb temp

(4) MS tunnel ambient temperature high

(5) MS line high flow rate

(6) MS line low pressure (reac mode sw in “run” pos)

(7) MS line high radiation

(8) Drywell high pressure

(9) SLC switch in run start position

(10) RCIC steam press low

(11) Main condenser low vacuum

(12) RHR equipment area high amb temp

(13) RCIC equipment area high amb temp

(14) RCIC exhaust diaphragm pressure high

(15) RCIC steam supply diff pressure (high flow)

(16) CUW process piping high differential flow

(17) CUW equipment area high amb temp

Question 430.38

Describe the leakage detection means provided to identify leakage for the outside-containment remote-manual isolation valves on the following influent lines: Feedwater, RHR injection, HPCS, standby liquid control, CUW connecting to feedwater line, CUW reactor vessel head spray. (6.2)

Response 430.38

These valves will be tested periodically in accordance with the procedures of Appendix J of 10CFR50-type C tests to determine the leakage tightness across the valve seat. Gross valve leakage out of the system will be detected (depending on location) by radiation monitors, temperature sensors (main steam tunnel) or drain sumps.

Question 430.39

The containment isolation design provisions for the recirculation pump seal water purge line do not meet the explicit requirements of GDC 55 nor does the design satisfy the GDC on some other defined basis as outlined in SRP Section 6.2.4. It is our position that the isolation design in the instance is inadequate and should be modified to satisfy GDC 55 either explicitly or on some other defined basis, with the appropriate justification. (6.2)

Response 430.39

The ABWR RIP purge lines penetrating the primary containment are currently equipped with one check valve each inside and outside containment and are currently 15A pipe size. This size is less than the ABWR instrument line size of 20A. Therefore, the same design criteria (GDC 55, Reg. Guide 1.11, and SRP 6.2.4) apply to the RIP purge line design.

Paragraph C.1b(2) of Regulatory Guide 1.11 coolant loss must be within the reactor coolant makeup system capability. The ABWR RCIC system provides "normal" reactor coolant makeup and is capable of "making up" coolant to the reactor with a nominal 25A diameter broken pipe discharging reactor coolant. Therefore, due to the small 15A size of the RIP purge lines, the current containment isolation valve configuration is in accordance with current NRC requirements.

Question 430.40

With respect to Figure 5.2-38a:

(1) Include the isolation valve arrangement of the standby liquid control system line.

(2) Identify the line labeled in the figure as "WDCS-A" (it joins the RWCU line prior to its connection to the feedwater line), and discuss the isolation provisions for that line.

Response 430.40a

The standby liquid control system will be added to the next revision of Figure 6.2-38a. The valve configuration is shown in Figure 20.3.2-1.

Response 430.40b

"WDCS" is now "RHR" (this correction will be made to the next revision of Figure 6.2-38a). The isolation for this line is provided by the feedwater system outboard motor operated valve shown in Figure 6.2-38a.

Question 430.41

Provide a diagram or reference to figure(s) showing the isolation valve arrangement for the lines identified below. For the isolation valve design of each of these lines, provide justification for not meeting the explicit requirements of GDC 56, and demonstrate that the guidelines for acceptable alternate containment isolation provisions contained in SRP 6.2.4 are satisfied. The lines in question are:

- HPCS and RHR test and pump miniflow bypass lines
- RCIC pump miniflow bypass line
- RCIC turbine exhaust and pump miniflow bypass lines
- SPCU suction and discharge lines (6.2)

Response 430.41

GE is applying the same alternate criteria to the ABWR that has been reviewed and approved by the NRC on past licensing applications. Specifically, the ABWR design applies GE Safety Standard 20 No. 8 to No. 9 to the lines in question as shown in Table 20.3.2-3.

Question 430.42

Describe the isolation provisions for the containment purge supply and exhaust lines and discuss design conformance with Branch Technical Position CSB 6-4, "Containment Purge During Normal Operations."

Response 430.42

The containment purge supply and exhaust lines connect to both the drywell and the wetwell. There is one purge supply penetration for the drywell and one purge supply penetration for the wetwell. Similarly, there is one exhaust penetration from each the drywell and wetwell. The purge supply line connection to each or both of the drywell and wetwell has two inboard isolation valves in parallel, located outside of, but as close as possible to the primary containment. One of these valves is intended for use for (high volume) inerting and purge. The other, a 50A valve, is used for any necessary nitrogen makeup during power operation. The outboard isolation valves are located in each of the lines for purge supply, nitrogen inerting, and nitrogen makeup. The exhaust line has a similar parallel arrangement for the two valves located nearest to the wetwell penetration and the two valves located nearest the drywell penetration. The two 50A exhaust valves are used for any necessary venting (e.g., for pressure control during operation. Opening the large purge exhaust valves is not expected. Outboard isolation valves are located in each of the lines to the plant vent and the standby gas treatment system. All isolation valves are air operated and fail in the closed position, the signal sent from the leak detection and isolation system.

As described above, these isolation valves are in conformance to the supplemental guidance of Branch Technical Position CSB6-4 on containment purge during normal operation.

Question 430.43

Discuss the closure times of isolation valves in system lines that can provide an open path from the primary containment to the environment (e.g., containment purge system). Also discuss provisions of radiation monitors in these lines having the capability of actuating containment isolation. (6.2)

Response 430.43

The closure time for specific valves on those lines through which an open path from primary containment to the environment may be prescribed are based upon (1) minimizing radiological impact to the environment or (2) standard operating valve characteristics. In the first category, only the main steam isolation valves utilize a minimized closure time to reduce the radiological impact as is described in Section 15.6. All other valves close in times (a few minutes) significantly shorter than necessary to prevent any radiological impact (tens of minutes). As such then the only event and the limiting event for closure time becomes the main steam line

break accident. The radiation monitors on all lines from the primary containment are either a direct measurement from the process radiation monitors (see Section 11.5) or an indirect area measurement from the area radiation monitors (see Section 12.2).

Question 430.44

Identify the system lines whose containment isolation requirements are covered by GDC 57 and discuss conformance of the design to the GDC requirements. (6.2)

Response 430.44

GDC 57 addresses closed loop systems which penetrate the containment but do not communicate with the containment interior. The system lines shown in Table 20.3.2-4 have been identified and are considered to conform to GDC57 with the valve configuration as shown. The heavy lines denote an extension of the containment boundry.

Question 430.45

For the combustible gas control systems design, identify clearly those areas that may not be part of the ABWR scope and provide relevant interface requirements. (6.2)

Response 430.45

The combustible gas control systems, consisting of flammability control system (FCS-T49) and atmospheric control system (ACS-T31), are completely within the scope covered by the ABWR SSAR. As such, there are no interfaces with equipment or systems outside the scope of this submittal. Interfaces with systems or equipment within the scope of the SSAR are discussed, as necessary in Subsection 6.2.5.

Question 430.46

According to SRP 6.2.5 specific acceptance criteria related to the concentration of hydrogen or oxygen in the containment atmosphere among others are the following:

(1) The analysis of hydrogen and oxygen production should be based on the parameters listed in Table 1 of Regulatory Guide 1.7 for the purpose of establishing the design basis for combustible control systems.

(2) The fission product decay energy used in the calculation of hydrogen and oxygen production from radiolysis should be equal to or more conservative than the decay energy model given in Branch Technical Position ASB9-2 in SRP 9.2.5.

Provide justification that the assumptions used in the ABWR in establishing the design basis for the combustible gas control systems are conservative with respect to the criteria a. and b. above. (6.2)

Response 430.46

The analysis of hydrogen and oxygen production for ABWR combustible gas control design is based on the parameters listed in Table 1 of Regulatory Guide 1.7. The fission

product decay energy model used is that presented in SRP 9.2.5 Branch Technical Position ASB 9.2. Therefore, the ABWR design basis for combustible gas control system is conservative and appropriate for design.

Question 430.47

Provide an analysis of the production and accumulation of combustible gases within the containment following a postulated loss-of-coolant accident including *all* applicable information specified in Section 6.2.5.3 of Regulatory Guide 1.70, Revision 3.

Response 430.47

Figure 6.2-41 provides an analysis of the oxygen and hydrogen concentrations in the primary containment after the design basis accident. Inputs to the analysis are provided in a revised Subsection 6.2.5.3.

Question 430.48

Regarding Containment Type A leakage testing, (6.2.6)

Question 430.48a

Provide the values for P_a and P_t.

Response 430.48a

P_a approximately 275 kPaG and $0.5\ P_a < P_t < P_a$.

Question 430.48b

Include the acceptance criterion for L_t during preoperational leakage rate tests, i.e., $L_t - L_a\ (L_{tm}/L_{am})$, for the case when $L_a\ (L_{tm}/L_{am}) = 0.7$.

Response 430.48b

Response to this question is provided in revised Subsection 6.2.6.1.1.5.

Question 430.48c

Your acceptance criterion for L_{tm} (SSAR Subsection 6.2.5.1.2.2, Item 1) is at variance with the staff's current practice for acceptance of L_{tm}. Also, it does not comply with the 10CFR50, Appendix J, Section III, Item A.1.(a) requirement. Therefore, either provide sufficient supporting justification for the exemption from compliance with the above requirement or correct the criterion as appropriate to comply with the requirement. Also, correct the stated acceptance criterion (SSAR Subsection 6.2.6.1.2.2, Item 3) as appropriate to comply with Appendix J, Section III, Item A.6.(b) requirement.

Response 430.48c

Response to this question is provided in revised Subsection 6.2.6.1.2.2.

Question 430.48d and 430.48e

Regarding ILRT, identify the systems that will not be vented or drained and provide reasons for the same.

Response 430.48d and 430.48e

Table 3.6-1 lists essential systems that become available to shut down the reactor and mitigate the consequences of a postulated piping failure to acceptable limits. P&IDs and process flow diagrams for these systems are contained in their respective chapters. With regrad to integrated leak rate test (ILRT), the criteria described in Table 3.6-7 is applied to determine which systems will or will not be vented or drained. Provisions for venting/draining affected systems are shown on the P&IDs listed in Table 3.6-7.

Question 430.49

Regarding Type B test, (6.2.6)

Question 430.49a

Clarify how air locks opened during periods when containment integrity is required by plant's Technical Specifications will be tested to comply with Appendix J, Section III, Item D.2.(b).(iii).

Response 430.49a

Response to this question is provided in revised Subsection 6.2.6.2.3.

Question 430.49b

Provide the frequency for periodic tests of air locks and associated inflatable seals.

Response 430.49b

Response to this question is provided by revised Subsection 6.2.6.2.3.

Question 430.49c

Provide the acceptance criteria for lock testing and the associated inflatable seal testing.

Response 430.49c

Response to this question is provided in revised Subsection 6.2.6.2.2.

Question 430.49d

List all containment penetrations subject to Type B tests.

Response 430.49d

Response to this question is provided in revised Subsection 6.2.6.2.1 and new Table 6.2-8.

Question 430.49e

List all those penetrations to be excluded from Type B testing and the rationale for excluding them.

Response 430.49e

Response to this question is provided in revised Subsection 6.2.6.2.1 and Table 6.2-8.

Question 430.50
Regarding Type C tests (6.2.6)

Question 430.50a
Correct the statement (Subsection 6.2.6.3.1, Paragraph 1) as appropriate to ensure that the hydraulic Type C tests are performed only on those isolation valves that are qualified for such tests per Appendix J. The current statement implies that these tests are not necessarily restricted to the valves that qualify for such tests.

Response 430.50a
Subsection 6.2.6.3.1, Paragraph 1, has been corrected as requested.

Question 430.50b
List all the primary containment isolation valves subject to Type C tests and provide the necessary P&IDs.

Response 430.50b
Response to this question is provided in new Table 6.2-7.

Question 430.50c
Provide the list of valves that you propose to test in the reverse direction and justification for such testing for each of these valves.

Response 430.50c
Response to this question is provided in new Table 6.2-7.

Question 430.50d
Identify the valves that you propose to test hydrostatically based on their ability to maintain a 30-day water leg seal. Also, identify other valves which you propose to test hydrostatically and provide the basis for such tests. Provide the test pressure for all the valves mentioned above.

Response 430.50d
Response to this question is provided in new Table 6.2-7.

Question 430.50e
Indicate test pressures for MSIVs (with justification if it is less than P_a) and isolation valves sealed from a sealing system.

Response 430.50e
Response to this question is provided in revised Subsection 6.2.6.3.1.

Question 430.50f
Indicate how you will perform Type C leak tests for ECCS systems and RCIC system isolation valves.

Response 430.50f
Response to this question is provided in new Table 6.2-7.

Question 430.50g
Confirm that the interval between two consecutive periodic Type C tests will not exceed 2 years as required by Appendix J.

Response 430.50g
Response to this question is provided in revised Subsection 6.2.6.4.

Question 430.50h
State what testing procedures you will follow regarding the valves that are not covered by Appendix J requirements.

Response 430.50h
Valves not specifically tested by a Type C test will be tested as part of the Type A test.

Question 430.51
Identify the reporting requirements for the tests. Note that your response should address compliance with requirements in this regard as stated in Appendix J, Sections III.A(a), IV.A and V. (For example, regarding follow up tests after containment modification, you have not included Type C testing for affected areas). (6.2.6)

Response 430.51
Response to this question is provided in revised Subsection 6.2.6.4.

Question 430.52
Regarding Secondary Containment, (6.2.6)

Question 430.52a
Identify the special testing procedures you will follow to assure a maximum allowable in leakage of 50 percent of the secondary containment free volume per day at a differential pressure of -6 mm water gauge with respect to the outdoor atmosphere (see Section 6.5.1.3.2).

Response 430.52a
The testing procedures for determining secondary containment inleakage for the ABWR will be the same as that used in current plants. These tests are part of the technical specifications (TS) regarding secondary containment operability (see TS 3.6.4.1). No new testing procedures are necessary as a result of the reduction of the design basis inleakage from 100%/day to 50%/day at a differential pressure of –6 mm water guage with respect to atmosphere.

Question 430.52b
Identify all potential leak paths which bypass the secondary containment. (For such identification, see (BTP) CSB 6-3, “Determination of Bypass Leakage Paths in Dual Containment Plants”).

Response 430.52b
Response to this question is provided in revised Subsection 6.2.3 and new Table 6.2-10.

Question 430.52c
Identify the total rate of secondary containment bypass leakage to the environment.

Response 430.52c
A total leakage rate of 140 SCFH is considered as secondary containment bypass leakage to the environment. This leakage is via the main steam line through leakage in the main steam line isolation valves.

Question 430.53
Identify all the interface requirements relating to containment leak testing. (6.2.6)

Response 430.53
There are no containment leak testing safety-related interfaces for the ABWR Standard Plant.

Question 430.54
Regarding Control Room Habitability systems, (6.4)

Question 430.54a
Provide the minimum positive pressure at which the control building envelope (which includes the mechanical equipment room) will be maintained with respect to the surrounding air spaces when makeup air is supplied to the envelope at the design basis rate (295 CFM).

Response 430.54a
As stated in Subsection 6.4.2.1, the control building will be maintained at a positive pressure of +2.5 to 12.7 mm of water gage pressure at all times. The mechanical equipment room is maintained at +0.0 to +12.7 mm of water gage.

Question 430.54b
Provide the periodicity for verification of control room pressurization with design flow rate of makeup air.

Response 430.54b
Subsections 9.4.1 and 7.3.1.1.8 concerning instrumentation of essential HVAC provide this information.

Question 430.54c
Clarify whether all potential leak paths (to be provided in Section 9.4.1) include dampers or valves upstream of recirculation fans.

Response 430.54c
New Figure 9.4-1 shows that the control room HVAC system provides two motor operated valves between all vent openings and their respective fans.

Question 430.54d
Identify the action to be taken when there is no flow of the equipment room return fan and consequently the equipment room is overpressurized (Table 6.4-1 contains no information on the above).

Response 430.54d
Table 6.4-1 has been revised accordingly.

Question 430.54e
Provide the actual minimum distances (lateral and vertical) of the control room ventilation inlets from major potential plant release points that have been used in your control room dose analysis. Also, provide a schematic of the location of control room intake vents.

Response 430.54e
See response to Question 430.54g and 430.54n.

Question 430.54f
Provide Figure 6.4-5 (plan view) which you state shows the release points (SGTS vent).

Response 430.54f
Reference changed from Figure 6.4-5 and Figure 6.4-1 has been revised to show reactor building stack.

Question 430.54g
Section 6.4.2.4 and Figure 6.4-1 indicate “only one” air inlet for supplying makeup air to the emergency zone. However, Table 6.4-2 and 15.6-8 and Section 15.6.5.5.2 indicate that there are “two automatic” air inlets for the emergency zone. Correct the above discrepancy as appropriate. Also describe the characteristics of these inlets with respect to their relative locations and automatic selection control features. State how both flow and isolation in each inlet assuming single active component failure will be ensured.

Response 430.54g
Response to this question provided in revised Subsection 6.4.2.4.

Question 430.54h
Describe the design features for protecting against confined area releases (e.g. multiple barriers, air flow patterns in ventilation zones adjacent to the emergency zone).

Response 430.54h
Response to this question is provided in revised Subsection 6.4.2.4.

Question 430.54i
Describe the specific features for protecting the control room operator from airborne radioactivity outside the control room and direct shine from all radiation sources (e.g., shielding thickness for control room structure boundary, two door vestibules).

Response 430.54i

The control room structural boundary has been designed to provide the necessary shielding for control room operators from direct shine. The control building is located between the reactor and turbine buildings. The exterior walls and ceiling of the control building are 0.9m thick. In addition, extra shielding is provided by the reactor and turbine building exterior walls. The floor of the computer room is 2.0m thick for shielding between the control structure and the steam tunnel. The control room is maintained at positive pressure with respect to neighboring zones. In addition all doors are of the double door vestibule type.

Question 430.54j

Clarify what you mean by "Sustained occupancy" (See SSAR Section 6.4.1.1, Item 3) for 12 persons.

Response 430.54j

Food, drink, lavatory facilities are provided for in the emergency zone to provide life support for up to 12 operating personnel during an emergency for a period of 5 days.

Question 430.54k

Provide justification for not specifying any unfiltered infiltration of contaminated air into the control room in SSAR Table 15.6.8.

Response 430.54k

The control room is maintained at a positive pressure with respect to atmospheric pressure. The only leakage paths are the doors. Because of the positive pressure maintained in the control room all leakage will be outward resulting in no inleakage to the control room.

Question 430.54l

Provide Subsection 6.3.1.1.6 which you state (SSAR Section 6.4.6) contains a complete description of the required instrumentation for ensuring control room habitability at all times.

Response 430.54l

Reference changed from Subsection 6.3.1.1.6 to 7.3.1.1.8.

Question 430.54m

Give schematics for control room emergency mode of operation during a postulated LOCA (this is required for calculating control room LOCA doses).

Response 430.54m

For detailed information on the control room emergency zone HVAC operation see Subsection 9.4.1 and 7.3.1.

Question 430.54n

The source terms and control room atmospheric dispersion factors (χ/Q values) used in the control room dose analysis (see SSAR Tables 15.6-8 and 15.6-12) to demonstrate ABWR control room compliance with GDC 19 are non-conservative. Therefore, reevaluate control

room doses during a postulated LOCA using RG 1.3 source terms and assumptions and the methodology given in Reference 4 of SSAR Section 15.6.7. Include possible dose contributions from containment shine, ESF filters and airborne radioactivity outside the control room. Also check and correct as appropriate the recirculation rate in the control room (22.4 m^3/sec) given in Table 15.6-8.

Response 430.54n

The control room dose analysis has been revised. Along with the revision the control room minmum distances for dose evaluation have been added to Subsection 15.6.5.5.3 with a more complete description of meteorological parameter derivation. Vertical seperation was not considered since the releases were evaluated as ground level releases. Two release points were used, (1) the base of the reactor building (plant) stack and (2) the panel doors midway along the turbine building on the service building side of the turbine building. A schematic of the intakes was provided in Figure 15.6-2 but in this revision has been broken in a seperate Figure 15.6-5.

Question 430.54o

Section 6.4.7.1, External Temperature, “provides design maximum external temperature of 100°F and –10°F. How are these values used in the design and assessments related to the ABWR? What factors, such as insulation, heat generation from control room personnel and equipment and heat losses, are taken into account? Do these values represent “instantaneous” values or are they temporal and/or spatial averages?

Response 430.54o

These values represent the summer maximum dry bulb air temperature. They are used in sizing the HVAC essential chilled water system chillers and the control room HVAC system.

Question 430.54p

Clarify your position on potential hazardous or toxic gas sources onsite of an ABWR. If applicable, indicate the special features provided in the ABWR design in this regard, to ensure control room habitability.

Response 430.54p

Response to this question is provided in revised Subsection 6.4.7.3.

Question 430.54q

Identify all the interface requirements for control room habitability systems (e.g., instrumentation for protection against toxic gases in general and chlorine in particular; potential toxic gas release points in the environs).

Response 430.54q

The ABWR control room habitability system has no interface requirements.

Question 430.55

Regarding ESF Atmosphere Cleanup Systems, (6.5.1)

Question 430.55a

Provide a table listing the compliance status of the Standby Gas Treatment System (SGTS) with each of the regulatory positions specified under C of RG 1.52. Provide justifications for each of those items that do not fully comply with the corresponding requirements. In this context, you may note that the lack of redundancy of the SGTS filter train (the staff considers that filter trains are also active components—see SRP 6.4, Acceptance Criterion II.2.b) is not acceptable. Further, the described sizing of the charcoal adsorbers based on assumed decontamination factors for various chemical forms of iodine in the suppression pool is not acceptable (RG 1.3 assumes a decontamination factor of 1 for all forms of iodine and RG 1.52 requires compliance with the above guide for the design of the adsorber section). Therefore, revise charcoal weight and charcoal iodine loading given in SSAR Table 6.5-1 as appropriate.

Response 430.55a

The response to the first part of this question is provided in Appendix 6A. Two completely redundant filter trains are provided as described in Subsection 6.5.1.3.3 The iodine source term is discussed in Subsections 6.5.1.3.3 and 6.5.1.3.4. Tables 6.5-1 and 6.5-2 have been revised.

Question 430.55b

Specify the laboratory test criteria for methyl iodine penetration that will be identified as an interface requirement to be qualified for the adsorber efficiencies for iodine given in SSAR Table 15.6-8. Also, provide the depth of the charcoal beds for the control room emergency system.

Response 430.55b

The response to the first part of this question is provided in Appendix 6A which assesses compliance against Regulatory Guide 1.52, Positions C.3.i, C.6.a (2) and C.6.a(3).

Control room HVAC charcoal bed depth is discussed in Subsection 9.4.1.1.3.

Question 430.55c

Provide a table listing the compliance status of the instrumentation provided for the SGTS for read out, recording and alarm provisions in the control room with each of the instrumentation items identified in Table 6.5.1-1 of SRP 6.5.1. For partial or noncompliance items, provide justifications.

Response 430.55c

The response to this question is provided in Appendix 6B.

Question 430.55d

Clarify whether primary containment purging during normal plant operation when required to limit the discharge of contaminants to the environment will always be through the SGTS (See SSAR Section 6.5.1.2.3.3). Clarify whether such a release prior to the purge system isolation has been considered in the LOCA dose analysis.

Response 430.55d
The response to this question is provided in Subsection 6.5.1.3.6. Note that Subsection 6.5.1.2.3.3 has been renumbered to 6.5.1.2.3.2.

Question 430.55e
Provide the compliance status tables referred to in Items (a) and (c) above for the control room ESF filter trains. (The staff notes that you have committed to discuss control room ESF filter system under Section 9.4.1. However, since evaluation of the control room habitability system cannot be completed until the information identified above is provided, the above information is requested now.)

Response 430.55e
The response to this question is provided in Subsections 9.4.1.1.6.2 and 9.4.1.1.6.3.

Question 430.55f
Identify the applicable interface requirements for the SGTS and the control room ESF atmosphere cleanup system.

Response 430.55f
Both the SGTS and the control room ESF atmosphere cleanup system are completely within the scope covered by the ABWR SSAR. As such, there are no interfaces with equipment or systems outside the scope of this submittal. Interfaces with systems or equipment within the scope of the SSAR are discussed, as necessary, in Section 6.4 and Subsections 6.5.1 and 9.4.1.1. Testing requirements are described in the standards and Regulatory Guides referenced in these sections.

Question 430.56
Regarding Fission Product Control Systems and Structures, (6.5.3)

Question 430.56a
Provide the drawdown time for achieving a negative pressure of 0.25 inch water gauge for the secondary containment with respect to the environs during SGTS operation. Clarify whether the unfiltered release of radioactivity to the environs during this time for postulated LOCA has been considered in the LOCA dose analysis. (Note that the unfiltered release need not be considered provided the required negative pressure differential is achieved within 60 seconds from the time of the accident).

Response 430.56a
The response to this question is provided in Subsection 6.5.1.3.2.

Question 430.56b
Provide justification (See SRP Section 6.5.3, II.4) for the decontamination factor assumed in SSAR Tables 6.5-2 and 15.6-8 for iodine in the suppression pool, correct the elemental, particulate and organic iodine fractions given in tables to be consistent with RG 1.3, and incorporate the correction in the LOCA analysis tables. Alternatively, taking no credit for

iodine retention in the suppression pool, revise the LOCA analysis tables. Note that the revision of the LOCA analysis tables (this also includes the control room doses) mentioned above is strictly in relation to the iodine retention factor in the suppression pool (also, there may be need for revision of other parameters (s) given in the tables and these will be identified under the relevant SRP Sections questions).

Response 430.56b

Table 6.5-2 has been revised to be consistent with the assumptions of Regulatory Guide 1.3

With regard to Table 15.6-8, the LOCA analysis is performed in accordance with paragraph 8.9 of the Licensing Review Bases document. An evaluation of suppression pool scrubbing using the MAAP3B code for LOCA conditions shows a scrubbing factor of 600 to 1000 (Subsection 19E.2.1). Therefore the use of a scrubbing factor of 100 is sufficiently conservative. The variance between the current calculations and the prior evaluation methodologies is found in Table 20.3-1.

Question 430.56c

Identify the applicable interface requirements

Response 430.56c

The response to this question can be found in the response to Question 430.55f.

Question 430.57

Regarding SSAR Section 6.7, the staff notes that the Nitrogen Supply System has been discussed under this section, instead of the Main Steam Isolation Valve Leakage Control System (MSIV-LCS) as required by the Standard Format for SARS. The staff will review the material presented in SSAR Section 6.7 along with the material that will be presented in SSAR Section 9.3.1.

Regarding MSIV-LCS, the staff notes that you are committed to provide a non-safety related MSIV leakage processing pathway consistent with those evaluated in NUREG-1169, "Resolution of Generic Issue C-8," August 1986. Since the staff has not finalized its position so far on the acceptability of the NUREG findings with regard to the design of the MSIV-LCS, provide pertinent information on the system design including interface requirements to evaluate the to-be-proposed design against the acceptance criteria of SRP 6.7. (6.7)

Response 430.57

In accordance with Section 8.9 of the GE ABWR Licensing Review Bases (Murley to Artigas dated August 7, 1987) GE committed to a design that provides a non-safety related main steam isolation valve (MSIV) leakage process pathway consistent with those evaluated in NUREG-1169. Accordingly, the drains and vents are routed to the main condenser for leakage control to take advantage of fission product plateout and holdup in the main steam line, drain line, and the main condenser. Fission products are removed by plateout on the relatively cool condenser tubes. The earlier BWR designs, where the fission products are routed through the reactor

building to the standby gas treatment system, had the disadvantage of increasing the dose rate to plant personnel. In addition there was no holdup or removal of noble gases, so that dose rate to the public may be higher.

The earlier BWR designs also had the disadvantage of being ineffective if the MSIVs greatly exceeded the design leak rate (typically 0.326 m^3/h). Because of no uncovery in the ABWR design, the ABWR would have less fission product generation during a postulated loss-of-coolant accident than earlier BWR designs. As a consequence the ABWR design is better able to handle leakages beyond the technical specification limits.

The ABWR design is also passive requiring no operator actions. The valves on the drain lines open automatically when the reactor is at less than 40 percent steam flow to vent to the main condenser. In addition, the valves fail open on loss of air or electrical power to ensure that this pathway exists during an accident. These valves and drain lines are illustrated in the Nuclear Boiler system P&ID (Figures 5.1-3).

In conclusion, the ABWR design provides a passive non-safety related means for controlling and mitigating the release of fission product leakage through the MSIVs and meets the GE ABWR Licensing Review Bases.

Question 430.58

The accident analyzed under this section considers only the airborne radioactivity that may be released due to potential failure of a concentrated waste tank in the radwaste enclosure. The SRP acceptance criteria, however, requires demonstration that the liquid radwaste concentration at the nearest potable water supply in an unrestricted area resulting from transport of the liquid radwaste to the unrestricted area does not exceed the radionuclide concentration limits specified in 10 CFR Part 20, Appendix B Table II, Column 2, Such a demonstration will require information on possible dilution and/or decay during transit which, in turn, will depend upon site specific data such as surface and ground water hydrology and the parameters governing liquid waste movement through the soil. Additionally, special design features (e.g., steel liners or walls in the radwaste enclosure) may be provided as part of the liquid radwaste treatment systems at certain sites. The staff will, therefore, review the site specific characteristics mentioned above individually for each plant referencing the ABWR and confine its review of ABWR, only to the choice of the liquid radwaste tank. Therefore, provide information on the following: (15.7.3)

(1) Basis for determining the concentrated waste tank as the worst tank (this may very well be the case, but in the absence of information on the capacities of major tanks, particularly the waste holdup tanks, it is hard to conclude that the above tank both in terms of radionuclide concentrations and inventories will turn out to be the worst tank).

(2) Radionuclide source terms, particularly for the long-lived radionuclides such as Cs-137 and Sr-90 (these may be the critical isotopes for sites that can claim only decay during transit) in the major liquid radwaste tanks.

Response 430.58
The scope of the ABWR SSAR has recently been extended to include the radwaste facility. A new Subsection 15.7.3 analysis has been submitted. Only airborne releases will need to be considered since the radwaste tanks will be located in a Seismic Category I steel lined radwaste building substructure which will prohibit any liquid release.

Question 440.1
SRP 4.6 identifies the following GDCs 23, 25, 26, 27, 28, and 29 in the acceptance criteria. Confirm that the reactivity system, described in Section 4.6 of the SSAR, meet the requirements of the above GDCs.

Response 440.1
Section 4.6 has been revised to reference the evaluation of the reactivity system against the requirements of the above GDCs contained in Subsection 3.1.2.

Question 440.2
In Section 4.6.2.3.2.2 analysis of malfunction relating to rod withdrawal, it is stated, “There are known single malfunctions that cause the unplanned withdrawal of even a single control rod.” Confirm that this is a editorial mistake and correct it if so. Otherwise, explain in detail the basis for this statement and why this is acceptable.

Response 440.2
This editorial error has been corrected in Subsection 4.6.2.3.2.2.

Following the initial response to NRC Question 440.2, Section 4.6.2.3.2.2 was deleted in a subsequent amendment.

Question 440.3
In Section 4.6.1.2 it is stated that CRD system in conjunction with RC&IS and RPS systems provides selected control rod run in (SCRRI) for reactor stability control. Describe in detail how SCRRI works.

Response 440.3
Response to this question is provided in revised Subsections 4.6.1.2(10) and 7.7.1.2.2(2).

Question 440.4
In Figure 4.6-8, CRD system P&ID, sheet 1, piping quality classes AA-D, FC-D, FD-D, FD-B, etc. are shown. Submit the document which explains these classes and relates them to ASME code classes.

Response 440.4

This information is scheduled to be included in Section 1.7. Essentially, the first two letters of the codes specify the pipe primary pressure rating (10.6 kg/cm^2, 63.4 kg/cm^2, etc.) the type of service (condensate or reactor water, steam, etc.), and material (carbon or stainless steel). The symbols "A", "B" and "C" represent ASME Section III, code Classes 1, 2, and 3, respectively. The symbol "D" represents ASME Section 8, or ANSI B31.1 or other equivalent codes.

Following the initial response to NRC Question 440.4, an amendment to the SSAR was processed in which Figure 4.6-8 was replaced by a new version of the CRD System P& ID that uses a piping quality classification system based on Japanese (MITI) standards. The equivalence of these piping quality classes with Regulation Guide 1.26 Quality Groups is specified on the ABWR Certification Piping and Instrument Symbols Diagram (SSAR Figure 1.7-1).

Question 440.5

In Figure 4.6-8, the leak receiver tank is shown. What is the function of this tank? How big is this tank? Will a high level in the tank impact the operation of the control rod drive?

Response 440.5

This leakage collection tank is no longer part of the design. The intent of the leakage collection system was to assist the operator in identifying which drives were potential candidates for seal replacement during plant outages, which would facilitate plant maintenance planning. However, the design could not provide the level of differentiation of leakage between individual drives needed for this purpose and was therefore deleted. Figure 4.6-8 will be updated at its next revision to document this change.

In an amendment to the SSAR subsequent to the initial response to NRC Question 440.5 an FMCRD leak detection and collection subsystem was added back into the CRD System design (see SSAR Figure 4.6-8). It does not use a single leakage collection tank as shown in the previous design; rather it utilizes a series of small leakage flow sight glass boxes located in the lower drywell. These sight glass boxes allow visual observation of FMCRD seal leakage during plant outage. The leakage flow from the boxes is monitored by flow instrumentation and directed to the lower drywell equipment drain sump where it contributes to identified leakage. The FMCRD leak detection subsystem does not perform any safety-related function; it is provided to allow the operator to monitor the FMCRD seal performance to identify those drives in need of seal refurbishment and facilitate drive maintenance planning for plant outages.

Question 440.6

Identify the essential portions of the CRD system which are safety related. Confirm that the safety related portions are isolable from non-essential portions. (4.6)

Response 440.6

The essential portions of the CRD system which are safety-related are:

(a) The hydraulic control units (HCUs),

(b) The scram insert piping from the HCUs to the fine motion control rod drives (FMCRDs), and

(c) The FMCRDs (except the motors)

The non-essential portions of the CRD system interface with the essential portions at the following connections to the HCUs:

(1) The accumulator charging water line

(2) The FMCRD purge water line, and

(3) The scram valve air supply from the scram air header.

The safety related portions of the HCU and the scram function are protected against failure in the non-essential portions of the charging water and purge water lines by check valves. Also, instrumentation in the charging water line provides signals to the reactor protection system to cause reactor scram in the event of loss of charging water pressure. Loss of pressure in the scram air header causes the scram valves to actuate, resulting in reactor scram. This fail-safe feature is the same as provided on current BWR designs using locking piston-type control rod drive.

The FMCRD provides the following functions:

(1) Normal rod positioning in response to commands from the Rod control and information system.

(2) Rapid control rod insertion (scram)

(3) Scram follow function (post-scram electric motor run-in)

(4) ATWS FMCRD run-in, and

(5) Selected control rod run-in (for stability control).

Of these, only the hydraulic scram function (Item 2) is classified as a safety-related function. The other functions, all of which involve positioning the rods by means of the FMCRD electric motors, are designed for high reliability but are not classified as safety-related. Therefore, because the FMCRD motor does not preform a safety-related function, it is classified as non-Class 1E.

With respect to ATWS in particular, the FMCRD run-in function is considered an ATWS mitigating system. As such, the NRC design guidance regarding system and equipment specifications for 10CFR50.62, was applied. This guidance states that the ATWS mitigating systems are not required to be safety-related; therefore, the FMCRD motors are not required to be Class 1E.

However, the automatic FMCRD run-in function for ATWS is designed to provide high reliability. Some features to be noted are:

(1) FMCRD run-in provides means of control rod insertion that is diverse from the hydraulic insertion of both the normal scram (RPS generated) and ATWS ARI (venting of Scram air header). Both of these independent functions must fail before FMCRD run-in is needed to shut down the reactor.

(2) The automatic FMCRD run-in utilizes initiation signals (high reactor pressure or low water level 2) which are diverse from the RPS.

(3) The FMCRD run-in controls and instrumentation are powered from non-divisional, non-interruptible DC power independent from RPS power.

(4) The FMCRD motors are connected to the divisional power buses which are connected to the emergency diesel generators. This allows FMCRD run-in during any loss-of-offsite power event. The divisional power assignments throughout the core for the FMCRD motor power supplies are in a “checkerboard” pattern. This arrangement provides the capability to achieve hot shutdown even with failure of offsite power and one of the diesel generators (a degraded ATWS condition beyond the design basis). Under these circumstances the operator would have time to reestablish offsite power or startup of the failed diesel generator to achieve cold shutdown. As a last resort, manual initiation of the SLCS would always be available to achieve cold shutdown.

(5) Continuous self-test features provide assurance that the FMCRD run-in logic is capable of functioning as designed. No single logic failure can result in the failure of more than one rod to insert.

The above features contribute to the high reliability of the ATWS FMCRD run-in feature of the ABWR design. Classification of the motors as safety-related (Class 1E) is not warranted, either by current regulatory requirements or from a reliability standpoint.

In the original response to NRC Question 440.6, it was described that the power to the FMCRD motors was divided between the three divisional power buses in a “checkerboard” pattern. Subsequent to this response, a design change to the FMCRD motor power assignments was made by direction of the NRC. The FMCRD motors are now divided into three groups that are connected separately to same safety-related bus with automatic transfer to the energized Plant

Investment Protection (PIP) switchgear on loss of voltage to the safety-related bus. The FMCRD motors are assigned to these three groups in a "checkerboard" pattern.

Question 440.7

In the old CRD system, the major function of the cooling water was to cool the drive mechanism and its seals to preclude damage resulting from long term exposure to reactor temperatures. What is the function of purge water flow to the drives? (4.6)

Response 440.7

The function of the purge water flow to the fine motion control rod drives is to prevent reactor water from entering the drive housing during operation. This will minimize crud buildup in the drive housing and reduce operator exposure during drive maintenance.

Question 440.8

We understand that the LaSalle Unit 2 fine motion control rod drive demonstration test is still in progress. Submit the test results as soon as it is available.

Response 440.8

At the current time, the LaSalle Unit 2 fine motion control rod drive demonstration test is expected to be terminated in October 1988. The final report for the FMCRD In-Plant Test Program, which will include the LaSalle Test results, will be formally issued in September 1989.

The final report for the LaSalle FMCRD In-Plant Test Program was formally issued and submitted by letter D.J. Robare to Charles L. Miller, "Submittal of Final Report on FMCRD In-Plant Test Program," dated October 19, 1989.

Question 440.9

In the present CRD system design, the ball check valve ensures rod insertion in the event the accumulator is not charged or the inlet scram valve fails to open if the reactor pressure is above 42.3 kg/cm^2g. Confirm that this capability still exists in the ABWR design. (4.6)

Response 440.9

The ABWR control rod design does not have the capability of the locking control rod design to insert hydraulically using reactor pressure in the event of a failure in the hydraulic control drive units (i.e., scram valve fails or accumulator is not charged). However, the fine motion control rod drive (FMCRD) has a diverse means of inserting the control rod using electric motor run-in if hydraulic scram fails. This feature provides the FMCRD with the capability to insert the control rod over the entire range of operating pressures.

Question 440.10

In section 4.6.2.3.1, it is stated the scram time is adequate as shown by the transient analyses of Chapter 15. Specify the scram time. (4.6.2.3.2.1)

Response 440.10

The average maximum scram time of all control rods in the core under the reactor conditions with accumulator available and reactor steady state pressure as measured at the vessel bottom below 76.3 kg/cm^{2}g shall meet the following requirements: (all times are after deenergizing of scram solenoids)

Insertion%	Time (seconds)
10	≤ 0.42
40	≤ 1.00
60	≤ 1.44
100	≤ 2.80

Question 440.11

For both the low ("zero") and operating power region describe the patterns of the control rod groups that are expected to be withdrawn simultaneously with the new rod system, and estimate the maximum for the total and differential reactivity worth of these groups. What sort of margin to period scram will exist in the low power range. (4.6)

Response 440.11

(1) Summary of rod withdrawal strategy

The ABWR rod groups are assigned as shown in Figures 20.3.2-2 and 20.3.2-3. The FMCRD step size is 18.3 mm (0.5% of full CRD stroke), with a nominal speed of 30mm/sec. The number of rods per gang for rod groups #1, 2, 3, 4 is 26, i.e., the whole group of 26 rods will be moved simultaneously as one gang. Group 1 and 2 will be moved continuously from full in to full out. Group 3 and 4 which cover the rod pattern condition from cold critical to hot critical, will be moved in jog cycle in one step at a time. The peripheral rods of group 5 and 6 will be moved as one gang. For the remaining 7, 8, 9, 10 groups, rods are divided into 4-rod gangs and 8-rod gangs.

ABWR/6 type banked position withdrawal sequence (BPWS) constraint, called grouped withdrawal sequence (GWS), is applied in ABWR as the rod withdrawal sequence guideline. It is in effect up to the low power setpoint (LPSP), or 25% power. Above LPSP, the rod withdrawal sequence is based on core-management pre-developed rod withdrawal sequence in 4 and 8 rod gangs.

(2) Typical rod patterns at various power level

(a) Hot criticality after hot recovery (EOIC, rated condition Xe)

Rod pattern: Figure 20.3.2-4 (quarter core only, same for all Figure 20.3.2-5 thru 20.3.2-10)

Rod position of each group: Table 20.3.2-5

(b) 5% power*, Cold Startup, equilibrium Xe, BOEC

Rod pattern: Figure 20.3.2-5

(c) 10% power*, Cold Startup, equilibrium Xe, BOEC

Rod pattern: Figure 20.3-6

(d) 25% power*, Cold Startup, equilibrium Xe, BOEC

Rod pattern: Figure 20.3-7

(e) 40% power*, Cold Startup, equilibrium Xe, BOEC

Rod pattern: Figure 20.3-8

(f) 53% power*, Cold Startup, equilibrium Xe, BOEC

Rod pattern: Figure 20.3-9

(g) 100% power 100% flow, Cold Startup, equilibrium Xe, BOEC

Rod pattern: Figure 20.3-10

*minimum core flow

(3) Estimates of maximum reactivity worth

Reactivity Worth Estimates

Group	Whole Group	Max. Worth 1st Rod	Max.Worth 1st Gang
1	---		
2	---		
3	2.1%		
4	1.5%		
5	---		

Reactivity Worth Estimates

Group	Whole Group	Max. Worth 1st Rod	Max.Worth 1st Gang
6	---		
7 } max	3.2%	≤ 1.2%	≤ 1.5%
8 } max			
9 } max			
10			

(4) Margin to period Scram estimates

For 3% total rod worth (full in to full out), the shortest period per step is ~60 seconds. For 2% total rod worth, the shortest period per step is ~100 seconds.

So, for step-wise withdrawal, there is plenty of margin to period scram (10 second scram setpoint)

Question 440.12

Describe the relative core location of control rods sharing a scram accumulator. Can a failure of the scram accumulator fail to insert adjacent rods? If so, discuss the consequences of that failure. (4.6)

Response 440.12

The grouped HCU to control rod drive assignment and their relative core locations are shown in Figure 20.3-11. As can be seen, the two control rods sharing a scram accumulator are separated by several core cell locations. A failure of an HCU cannot result in the failure to insert adjacent rods.

Subsequent to the original response to NRC Question 440.12, the following changes were made to the grouped HCU to control rod drive assignments:

- At core location 47-6, changed the assigned HCU from 92 to 103
- At core location 35-18, changed the assigned HCU from 103 to 92
- At core location 35-50, changed the assigned HCU from 77 to 66
- At core location 23-62, changed the assigned HCU from 66 to 77

Table 20.3.2-1 Core Decay Heat* Following LOCA Short-Term Analyses (Response to Question 430.21)

Time (sec)	Normalized Core Heat†
0	1.084
2	0.5566
6	0.5501
10	0.3859
20	0.1239
30	0.0772
31	0.0771
60	0.0472
100	0.0427
120	0.04
121	0.039
200	0.0358
600	0.0279
1000	0.0245

* Based on 1973 ANS Standard with 20% margin.

† Normalized to 102% of rated thermal power.

Table 20.3.2-2 Integrated Core Decay Heat Values* Short-Term Analysis (Response to Question 430.21)

Time t_s (s)	Integrated Decay Heat in Full Power Seconds†
0.0	0.0
0.1	0.1155
1	1.0732
2	1.8028
4	2.997
6	4.312
8	5.602
10^1	6.779
2	10.648
4	13.245
6	14.492
8	15.509
10^2	16.426
2	20.515
4	27.479
6	33.618
8	39.284
10^3	44.621

* Based on 1973 ANS Standard with 20% margin.

† Full Power = 4.006 GW

Table 20.3.2-3 Isolation Valve Arrangements Not Meeting the Explicit Requirements of GDC56 (Response to Question 430.41)

Lines	Containment Isolation Valves	Applicable GESS 20
RHR Test Line And Minimum Flow Line	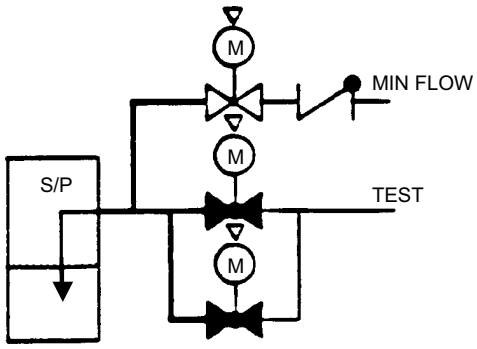	NO.8
HPCF/RCIC Test line and Minimum Flow Line	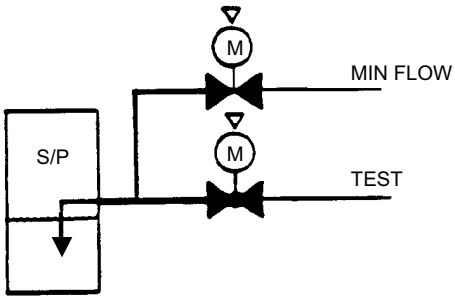	NO.8
RCIC Turbine Exhaust Line and RCIC Vacuum Pump Discharge Line	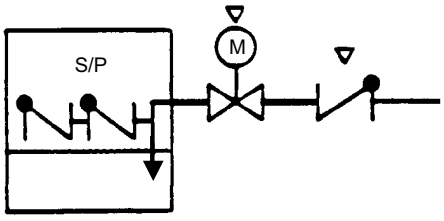	NO.8
SPCU Suction/Return Line	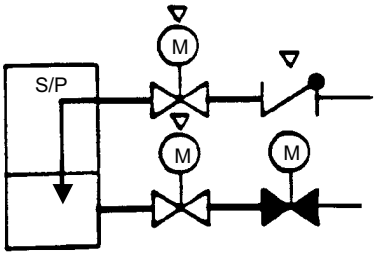	NO. 9 (SUCTION) NO.8 (RETURN)

Table 20.3.2-3 Isolation Valve Arrangements Not Meeting the Explicit Requirements of GDC56 (Response to Question 430.41) (Continued)

GE Safety Standard 20 No. 8

This criterion applies to a line with the following characteristics.

a. Penetrates containment;

b. Communicates with containment interior;

c. Is not an instrument line; and

d. Is not a suppression pool effluent line.

Each of these lines shall be provided with two isolation valves. At least one valve shall be located outside of the containment, the other valve may be located either inside or outside the containment. Alternatively, one isolation valve outside the containment which is normally closed (or a blind flange) and which does not receive a signal to open subsequent to an accident may be used. On influent lines having two valves, one may be a check valve, and the valve outside the containment must be capable of automatic, or remote-manual closure, or should be normally locked closed. On effluent lines or where a second valve is not provided on an influent line, these valves shall be capable of automatic and remote manual closure, or should be normally locked closed. The valves shall be located as close as practicable to the containment.

GE Safety Standard 20 No. 9

This criterion applies to a line with the following characteristics:

a. Penetrates containment;

b. Communicates with suppression pool;

c. Is not an instrument line; and

d. Is an effluent line.

Effluent lines shall be provided with one remote-manual valve outside the containment. The valve shall be located as close as practicable to the containment.

Table 20.3.2-4 Line Whose Containment Isolation Requirements are Covered By GDC57 (Response to Question 430.44)

LINES	CONTAINMENT ISOLATION VALVE
TIP SEAL PURGE LINE	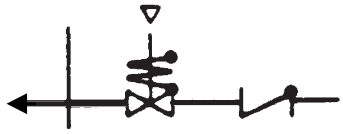
TIP GUIDE LINE	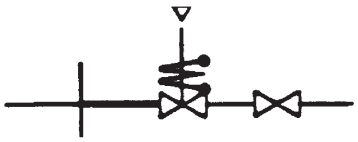
REACTOR BUILDING COOLING WATER AND HVAC NORMAL COOLING WATER SUPPLY LINE	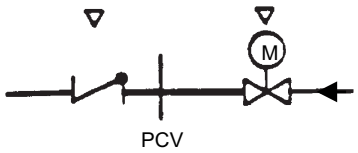
REACTOR BUILDING COOLING WATER AND HVAC NORMAL COOLING WATER RETURN LINE	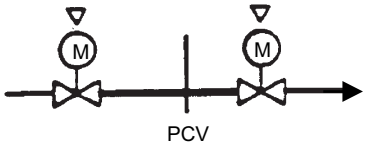
SUPPRESSION POOL VACUUM BREAKER TEST AIR SUPPLY LINE	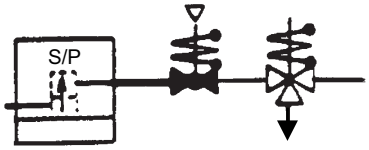
SERVICE AIR SUPPLY LINE	
INSTRUMENT AIR SUPPLY LINE	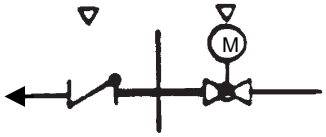
HIGH PRESSURE NITROGEN SUPPLY	

Table 20.3.2-5 Hot Startup Criticality Rod Sequence (Response to Question 440.11)

Group #	Gang #	Rod Withdrawn To Notch Position
1	(1)	0 – 48 (3.66m)
2	(2)	0 – 48
3	(3)	0 – 48
4	(4)	0 – 48
5	(5)	0 – 18 (1.37m)
6	(6)	0 – 18
7	A (7)	0 – 12 (0.91m)
	B (8)	0 – 12
	C (9)	0 – 10 (0.76m)
	D (10)	0 – 12
8	A (11)	0 – 12
	B (12)	0 – 10
	C (13)	0 – 10
9	A (14)	0
	B (15)	0
	C (16)	0
10	A (17)	0
	B (18)	0
	C (19)	0
	D (20)	0
	E (21)	0

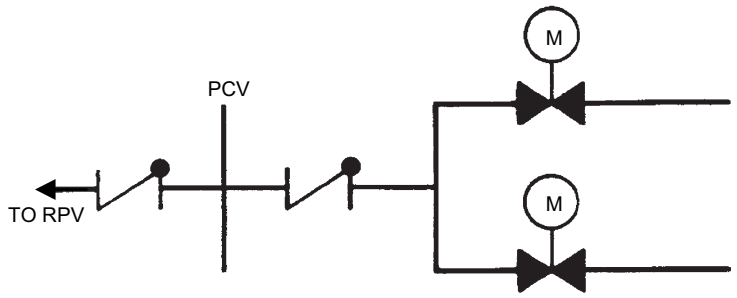

Figure 20.3.2-1 Isolation Valve Arrangement of Standby Liquid Control System Line (Response to Question 430.40)

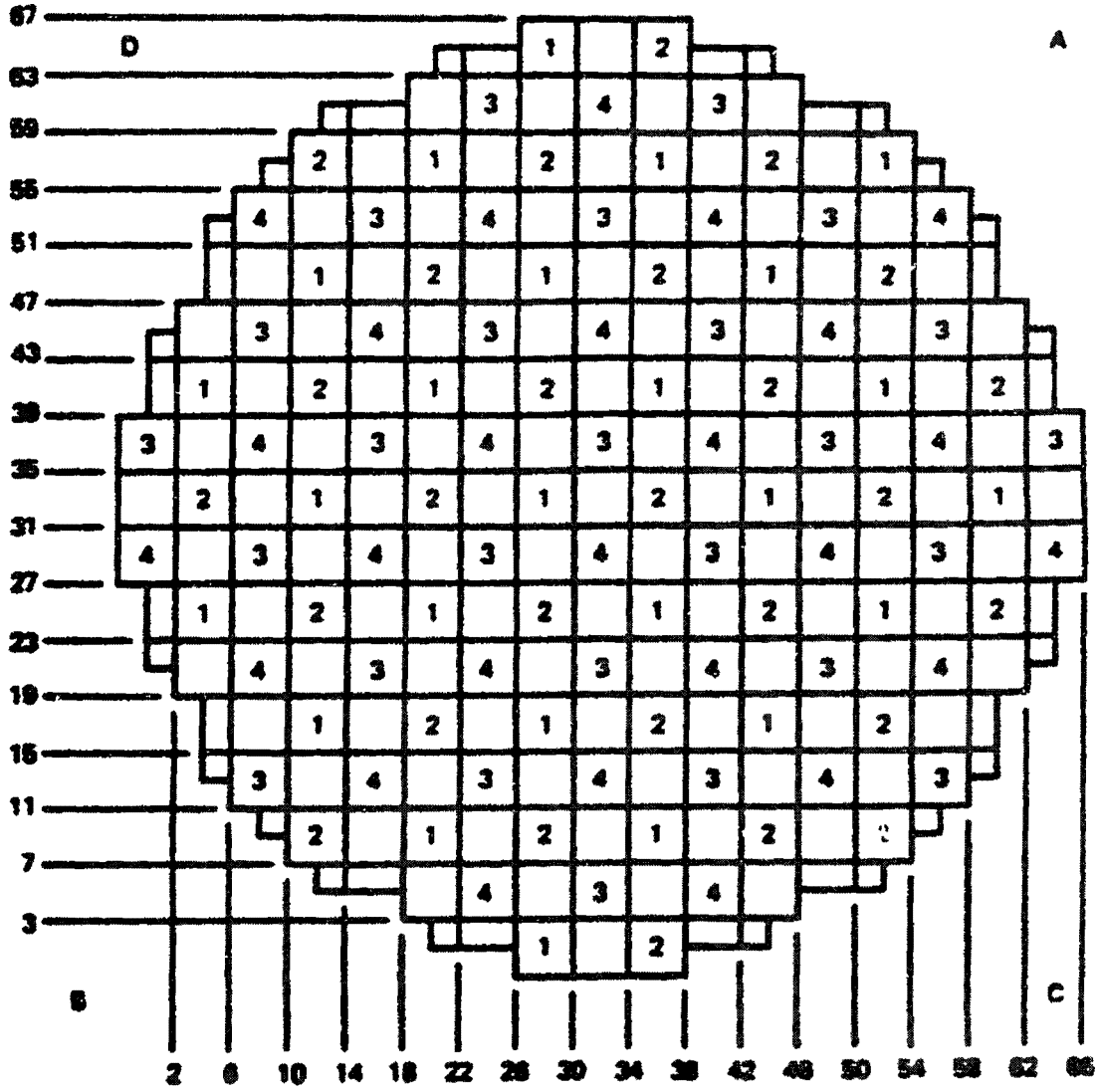

Figure 20.3.2-2 Rod Groups 1 – 4, Sequence A (Response to Question 440.11)

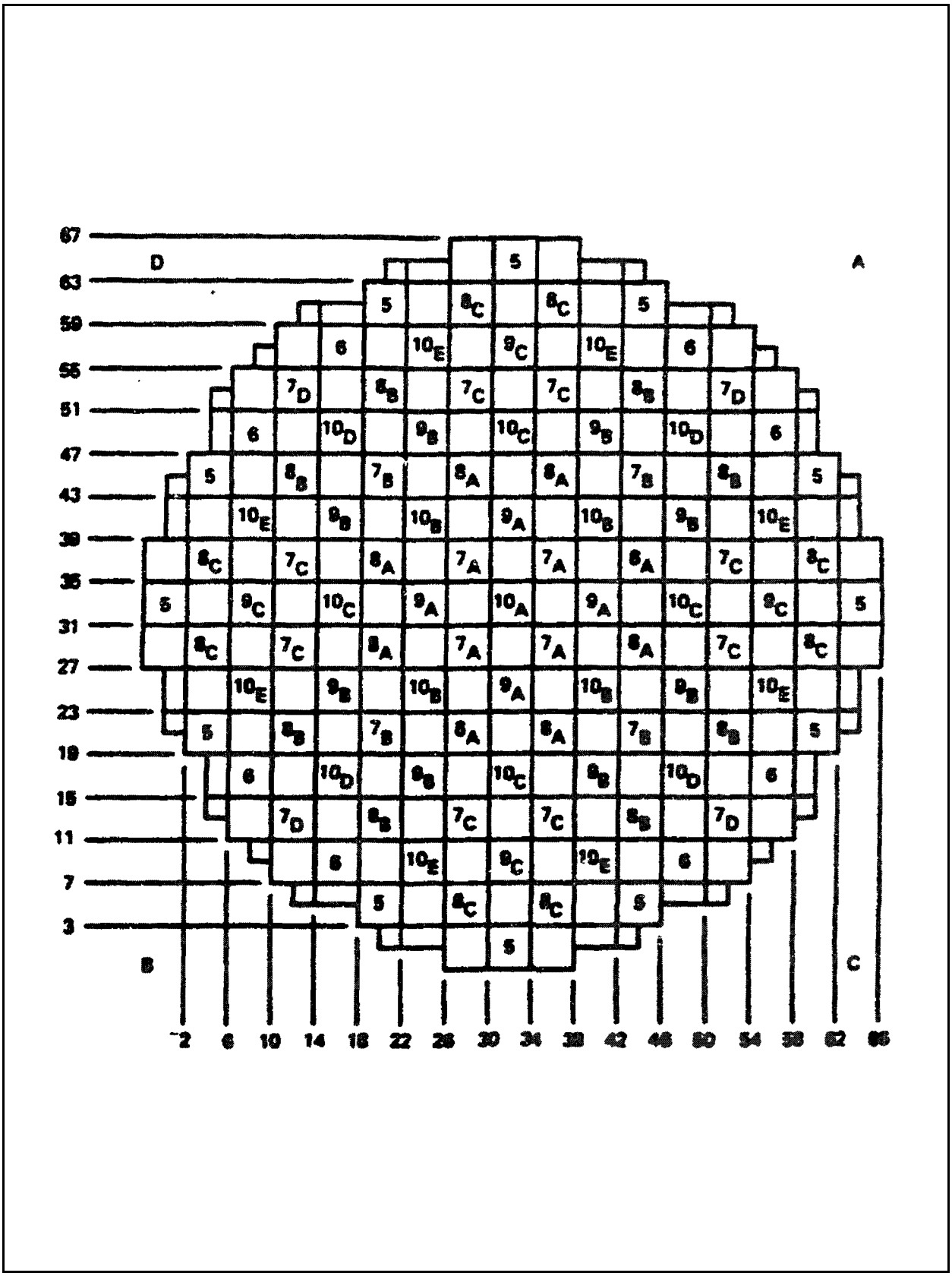

Figure 20.3.2-3 Rod Groups 5 – 10, Sequence A (Response to Question 440.11)

CONTROL ROD CONFIGURATION
IN NOTCHES WITHDRAWN

	1	3	5	7	9	11	13	15	17	19	21	23	25	27	29	31	33	
67									18									1
63						18		10										3
59					18		0		0									5
55				12		10		10										7
51			18		0		0		0									9
47		18		10		12		12										11
43			0		0		0		0									13
39		10		10		12		12										15
35	18		0		0		0		0									17
31																		19

Figure 20.3.2-4 Hot Recovery Criticality Control (Response to Question 440.11)

CONTROL ROD CONFIGURATION
IN NOTCHES WITHDRAWN

	1	3	5	7	9	11	13	15	17	19	21	23	25	27	29	31	33	
67									0									1
63						0		8										3
59					0		0		0									5
55				6		8		6										7
51			0		0		0		0									9
47		0		8		6		8										11
43			0		0		0		0									13
39		8		8		8		6										15
35	0		0		0		0		0									17
31																		19

Figure 20.3.2-5 5% Power Control Rod Pattern (Response to Question 440.11)

CONTROL ROD CONFIGURATION
IN NOTCHES WITHDRAWN

	1	3	5	7	9	11	13	15	17	19	21	23	25	27	29	31	33	
67									12									1
63						12		8										3
59					12		0		0									5
55				8		8		8										7
51			12		0		0		0									9
47		12		8		8		8										11
43			0		0		0		0									13
39		8		8		8		8										15
35	12		0		0		0		0									17
31																		19

Figure 20.3.2-6 10% Power Control Rod Pattern (Response to Question 440.11)

CONTROL ROD CONFIGURATION
IN NOTCHES WITHDRAWN

	1	3	5	7	9	11	13	15	17	19	21	23	25	27	29	31	33	
67																		1
63								20										3
59							0		0									5
55				20		20		20										7
51					0		0		0									9
47				20		20		20										11
43			0		0		0		0									13
39		20		20		20		20										15
35			0		0		0		0									17
31																		19

Figure 20.3.2-7 25% Power Control Rod Pattern (Response to Question 440.11)

CONTR L ROD CONFIGURATION
IN NOTCHES WITHDRAWN

	1	3	5	7	9	11	13	15	17	19	21	23	25	27	29	31	33	
67																		1
63																		3
59							8		10									5
55																		7
51					8		10		6									9
47																		11
43			8		10		6		10									13
39																		15
35			10		6		10		6									17
31																		19

Figure 20.3.2-8 40% Power Control Rod Pattern (Response to Question 440.11)

CONTROL ROD CONFIGURATION
IN NOTCHES WITHDRAWN

	1	3	5	7	9	11	13	15	17	19	21	23	25	27	29	31	33	
67																		1
63																		3
59							10		22									5
55																		7
51					10		22		8									9
47																		11
43			10		22		10		22									13
39																		15
35			22		8		22		8									17
31																		19

Figure 20.3.2-9 53% Power Control Rod Pattern (Response to Question 440.11)

CONTROL ROD CONFIGURATION
IN NOTCHES WITHDRAWN

	1	3	5	7	9	11	13	15	17	19	21	23	25	27	29	31	33	
67																		1
63																		3
59																		5
55																		7
51					8				10									9
47																		11
43							8											13
39																		15
35					10				8									17
31																		19

Figure 20.3.2-10 100% Power Control Rod Pattern (Response to Question 440.11)

Division	HCU NO	CR
A	1–25	50
B	26–51	51
C	52–77	52
D	78–103	52

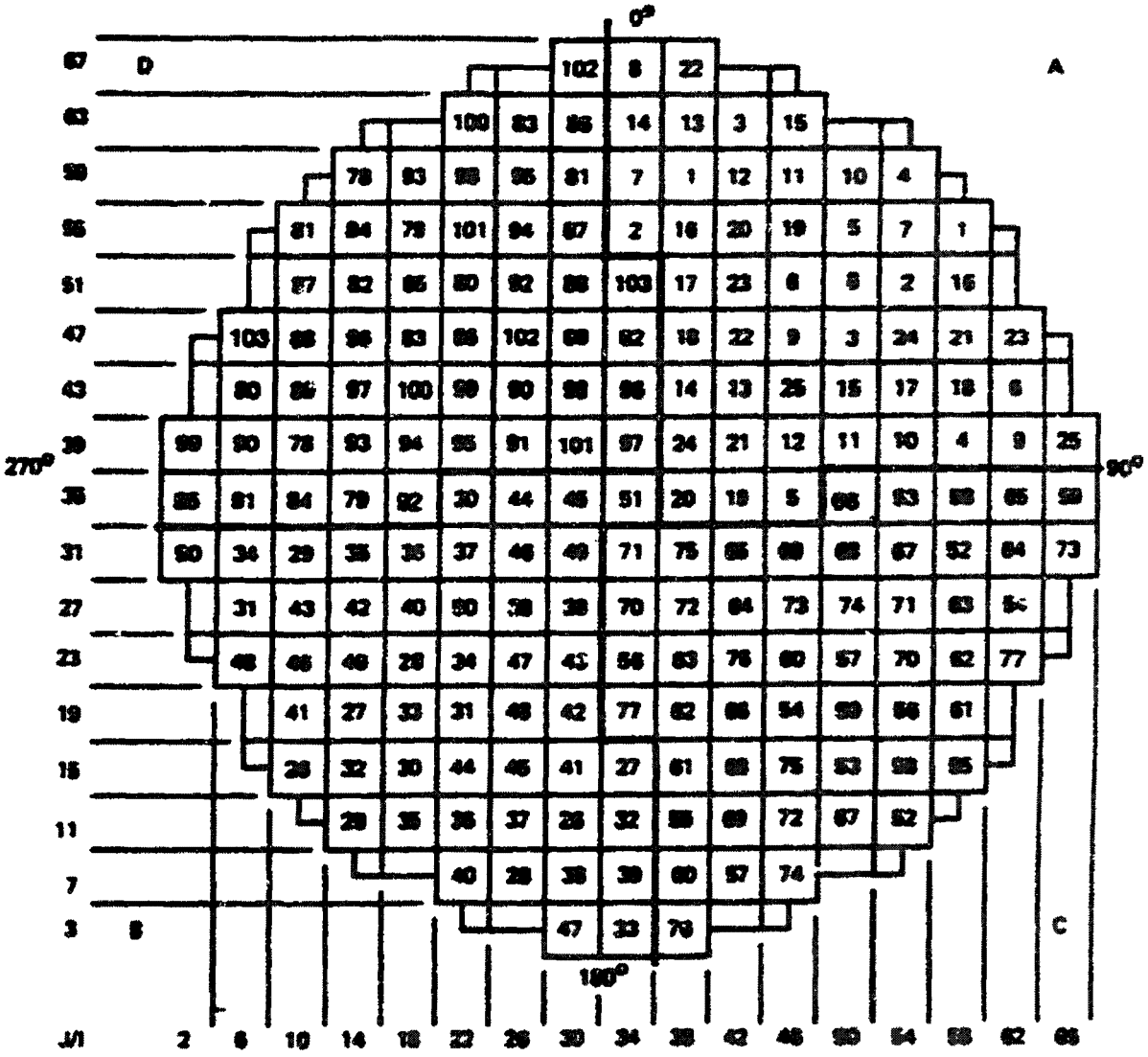

Figure 20.3.2-11 Grouped HCU to Control Rod Drive Assignments (Response to Question 440.12)

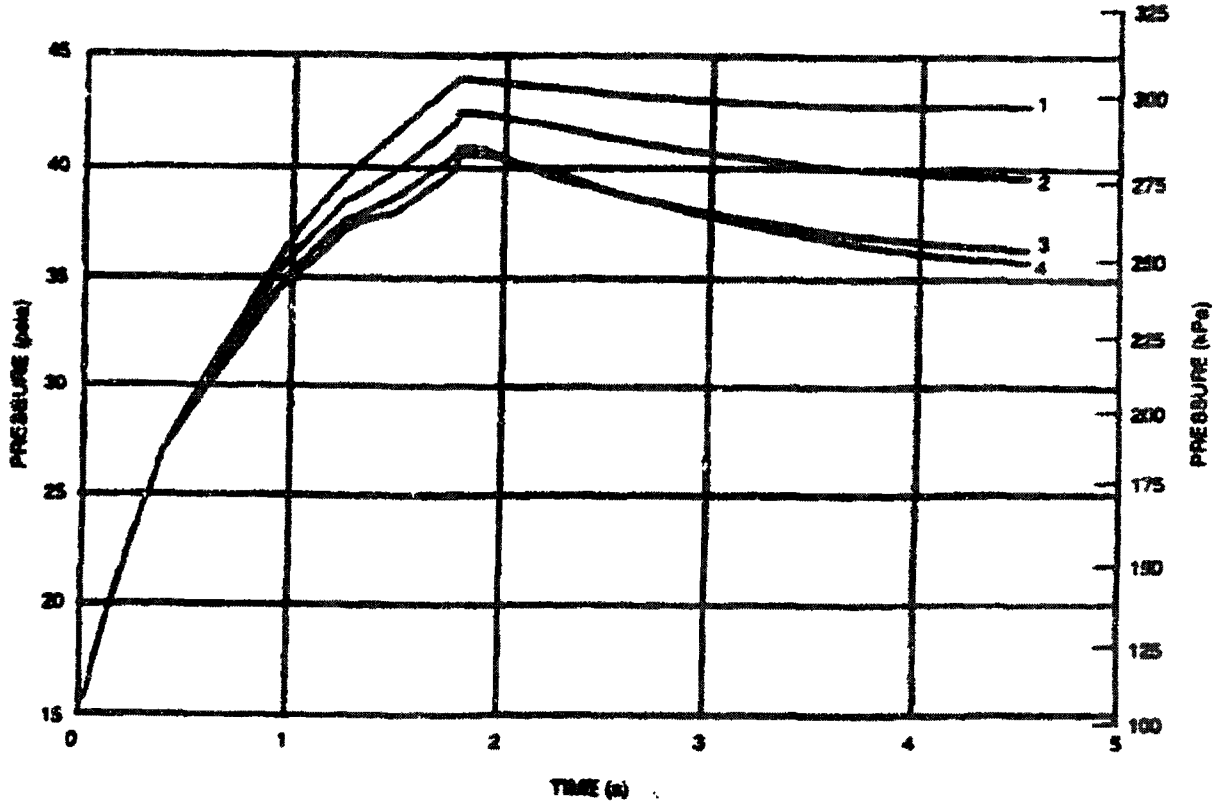

Break Area 1: DBA; 2: 465 cm^2; 3: 93 cm^2; 4: 9.3 cm^2

Figure 20.3.2-11a Drywell Pressure Versus Time (Response to Question 430.13)

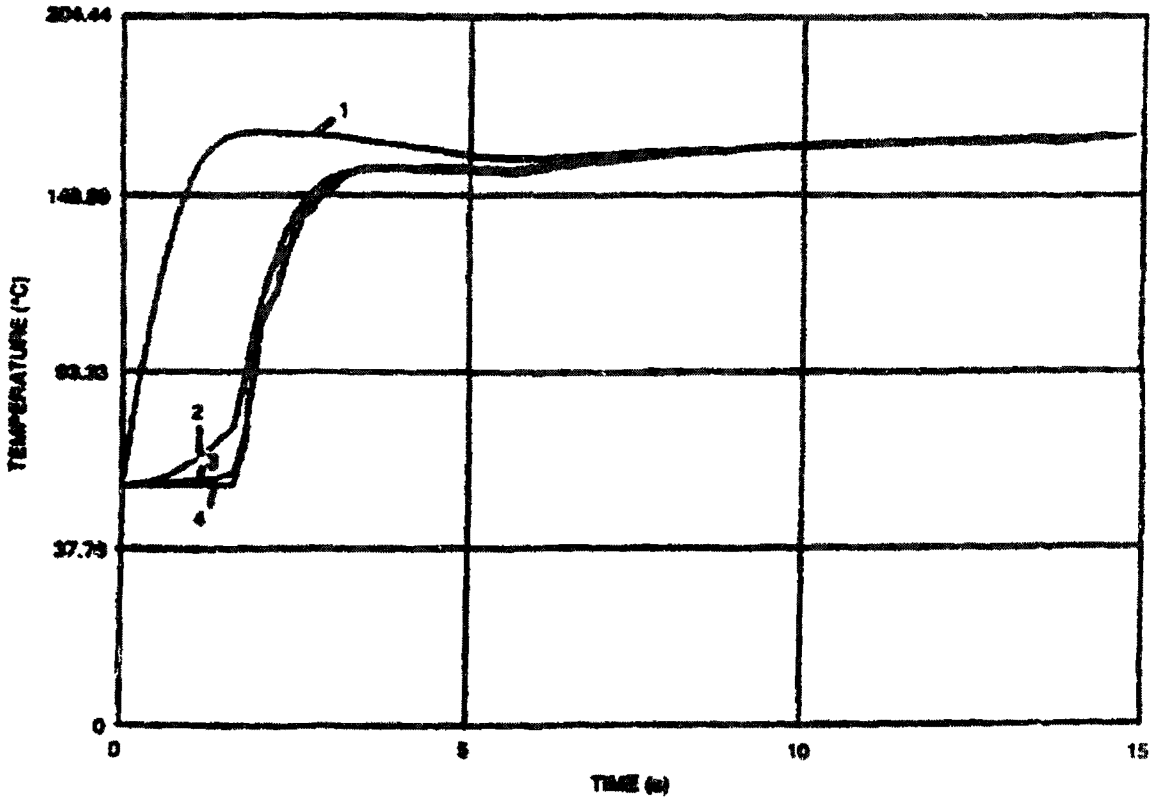

Main Steamline Break Area 1: DBA; 2: 465 cm^2; 3: 93 cm^2; 4: 9.3 cm^2

Figure 20.3.2-11b Drywell Temperature Versus Time (Response to Question 430.13)

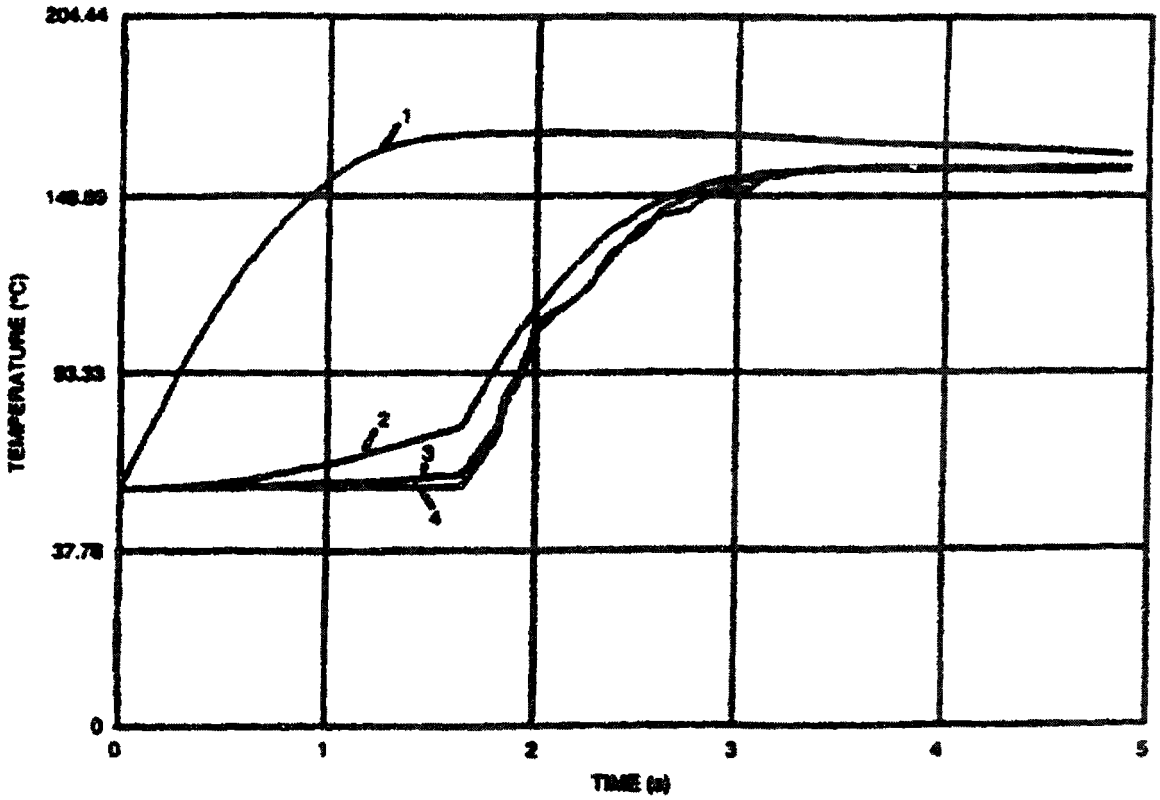

Main Steamline Break Area 1: DBA; 2: 465 cm^2; 3: 93 cm^2; 4: 9.3 cm^2

Figure 20.3.2-11c Drywell Temperature Versus Time (Response to Question 430.13)

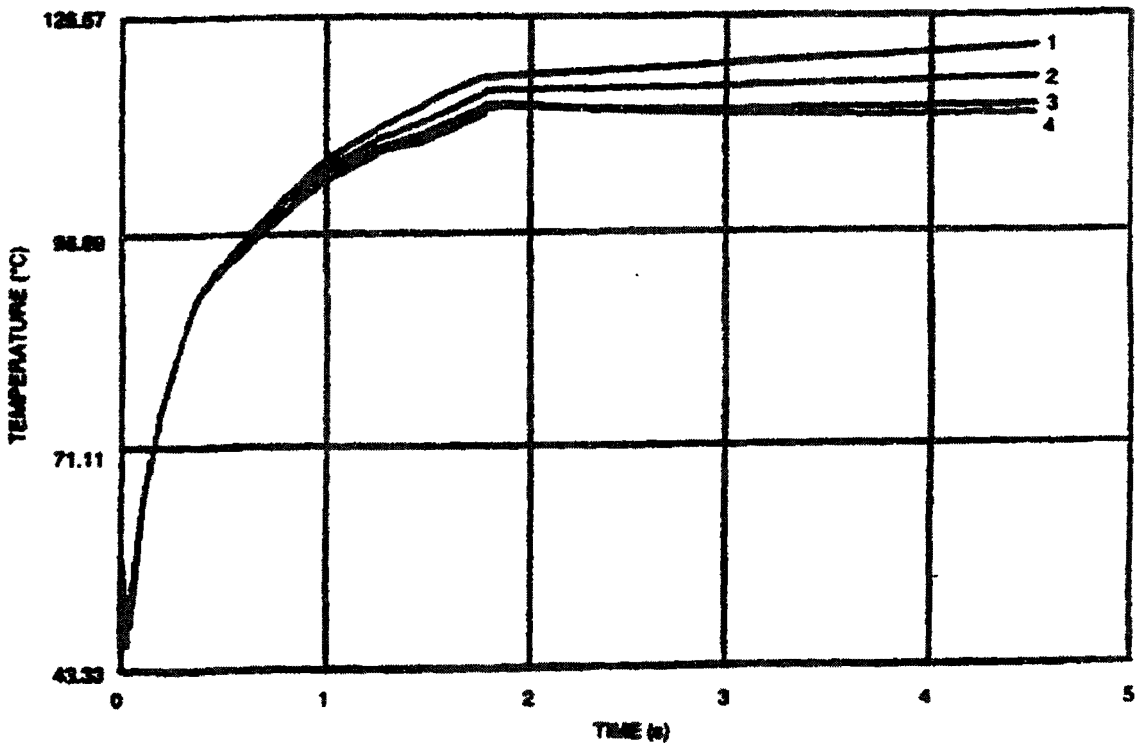

Break Area 1: DBA; 2: 465 cm^2; 3: 93 cm^2; 4: 9.3 cm^2

Figure 20.3.2-11d Drywell Temperature Versus Time (Response to Question 430.13)

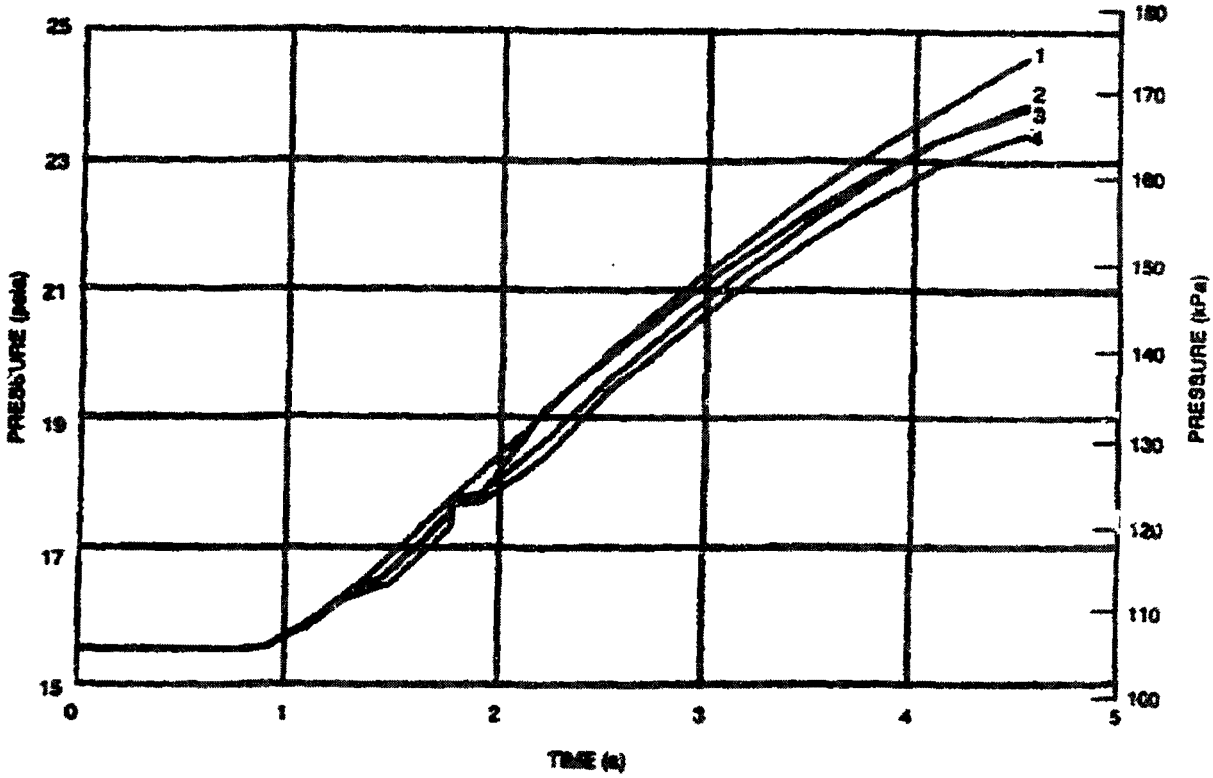

Break Area 1: DBA; 2: 465 cm^2; 3: 93 cm^2; 4: 9.3 cm^2

Figure 20.3.2-11e Wetwell Pressure Versus Time (Response to Question 430.13)

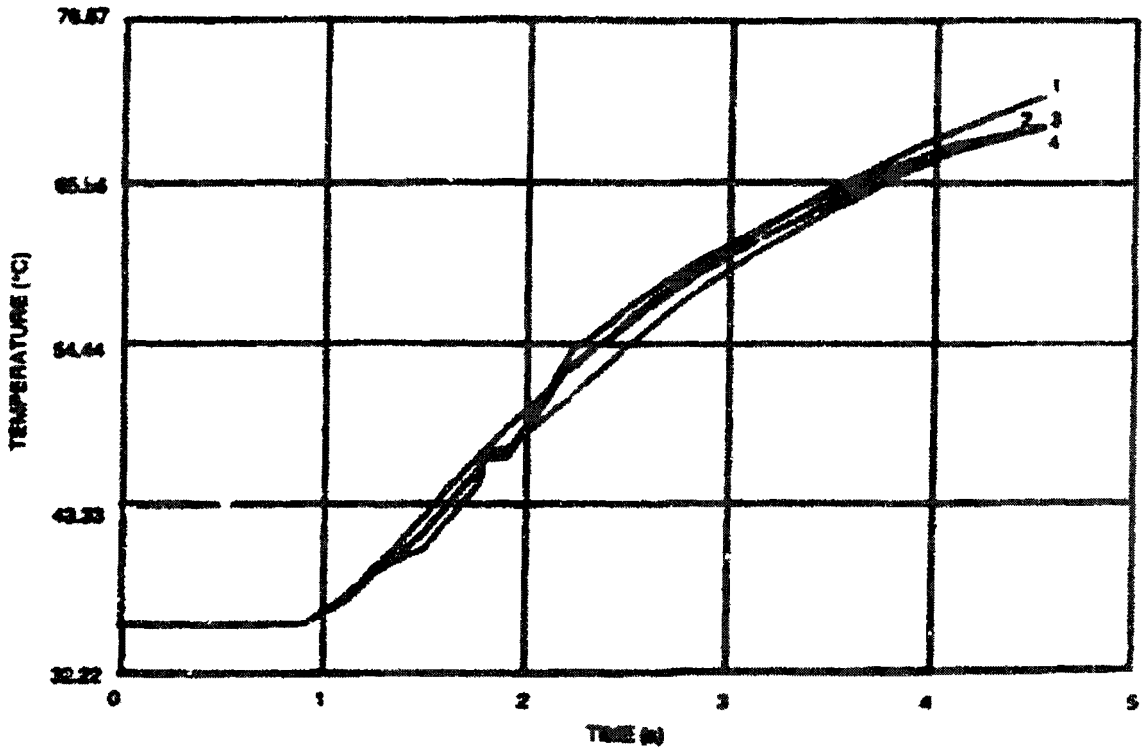

Break Area 1: DBA; 2: 465 cm^2; 3: 93 cm^2; 4: 9.3 cm^2

Figure 20.3.2-11f Wetwell Pressure Versus Time (Response to Question 430.13)

20.3.3 Response to Third RAI — Reference 3

Question 220.1

In Subsection 3.5.3 for local damage prediction of concrete structures and barriers, the concrete wall and roof thicknesses determined should be less than those listed for Region II in Table 1 of SRP Subsection 3.5.3 unless justification is provided

Response 220.1

The ABWR meets the acceptance criteria defined in Subsections 3.5.3 and 3.5.1.4 except for Regulation Guide 1.76. The Design Basis Tornado and the Design Basis Tornado Missiles are based on the requirements of SECY-93-087. The concrete wall and roof thicknesses are larger than those listed for Region II in Table 1 of SRP 3.5.3.

Question 220.2

The soil-structure interaction (SSI) analyses of the reactor building (RB) discussed in Section 3.7 of the ABWR SSAR are based on Revision 2 of SRP Sections 3.7.1 and 3.7.2 as provided for by the Licensing Review Bases dated August 7, 1987. It should be noted that Revision 2 is currently in the process of public comments and to this date has not been finalized. Consequently, there may be changes to Revision 2 which may require further discussion of this topic at a later date.

Response 220.2

GE agrees that significant differences between Draft Revision 2 of SRP Section 3.7.1 and 3.7.2 as delineated in the ABWR Licensing Review Bases and their final issued form may require further discussions.

The ABWR SSI analysis is consistent with the final versions of Revision 2 of SRP Sections 3.7.1 and 3.7.2 issued in August, 1989.

Question 220.3

It is indicated that computer programs SASSI and CLASSI/ASD will be used to perform SSI analyses. Indicate how these programs are validated. In CLASSI the contribution of radiation damping cannot be determined on a mode by mode basis and it can have a substantial impact on building response. Provide results of sensitivity studies.

Response 220.3

The Bechtel IBM version of the SASSI computer program is used for the ABWR analysis. The features/options of the program are validated by executing 22 validation problems. The validation problems validate the major capabilities of SASSI in terms of scattering, impedance, SSI analysis capabilities including element mass/stiffness and response computation capabilities of SASSI. Table 20.3.3-1 shows the validated capability of SASSI versus the respective validation problem number. Depending on the complexity of the validation problem, the SASSI results are compared to hand calculations, solutions from other computer programs,

or solutions in published technical literature. The results of all validation problems are in good agreement with the reference solutions.

The CLASSI/ASD computer program is no longer used for the ABWR analysis.

Question 220.4

Since the response due to SSE are obtained in ratio to the response from the OBE analysis, indicate what is the purpose of establishing response spectra with .07 and 0.10 damping.

Response 220.4

The OBE analysis has been eliminated from design consideration for the ABWR. The SSE analysis is performed using SSE damping values.

Question 220.5

In Section 3.7.2.9, a number of conservative assumptions are listed in the calculation of floor response spectra. Some of the assumptions listed are not relevant to the generation of the floor response spectra, but to the overall design of the equipment. It is stated that the floor response spectra obtained from the time-history analysis of the building are broadened plus and minus 10% in frequency. In view of the fact that response spectra for all site-soil cases are combined to arrive at one set of final response spectra (Section 3.7.2.5), indicate how the ±10% broadening is accomplished.

Response 220.5

The procedures used to arrive at site-envelope floor response spectra are described in Subsection 3A.10.2. Note that spectral peak broadening has been increased to ±15%.

Question 220.6

In section 3.7.3.2.2, for fatigue evaluation it is indicated that only 10 peak OBE stress cycles are taken into account which appears to be very low, considering the fact that the reactor building may also be subjected to SRV loadings. As indicated in the SRP Section 3.7.3 larger number of cycles should be considered.

Response 220.6

Subsection 3.7.3.2 has been revised to comply with SECY-93-087.

Question 220.7

In appendix 3A.6 the following statement is made in the first paragraph:

> "The behavior of soil is nonlinear under seismic excitation. The soil nonlinearity can be conveniently separated into primary and secondary nonlinearities. The primary nonlinearity is associated with the state of deformations induced by the free-field ground motion. The secondary nonlinearity is attributed to the SSI effects. The secondary effect on structural response is usually not significant and is neglected in the appendix."

Indicate if the secondary effect includes the radiation damping. If it does not, indicate how it is considered in the analysis.

Response 220.7

Both the primary and secondary soil nonlinearities affect the soil material damping only. The effect of radiation damping is considered in computing frequency-dependent foundation impedances in the SSI analysis. In computing these foundation impedances, the strain-compatible soil properties which account for the primary soil nonlinearity, are used.

Question 220.8

In Appendix 3A.6 the computer program SHAKE is used to perform free-field site response analysis. To staff's knowledge, analysis based on SHAKE under certain site conditions may give unrealistic results and it cannot be used indiscriminately. In view of this observation, indicate what control or cause has been exerted in your use.

Response 220.8

Seismic free-field analyses were performed using the computer program SHAKE and the generic soil profiles defined in Section 3A. Strain-dependent soil properties were obtained from generic soil degradation properties. The soil material damping was limited to 15% as stipulated in SRP 3.7.2. In all cases, SHAKE deconvalution analysis was performed by specifying the design time history at the grade level. For the soft soil profile, the cut-off frequency was controlled for the purpose of obtaining strain-compatible soil properties. The results of analysis in terms of strain-compatible shear wave velocity and the maximum acceleration for the soft UB and the medium stiff VP3 profiles using horizontal H1 design time history are shown in Figures 20.3.3-1, 20.3.3-2, respectively. These results show that with the properties considered and with the control of cut-off frequency, the free-field responses obtained are reasonable.

Question 220.9

It is noted that ABWR is designed for 60-year life versus the 40-year life for plant design in current regulation. From the point of view of structures, provide your justification for the longer plant life.

Response 220.9

The limiting factors on a structures life are external events that exceed the plant design basis.

For external events, the ABWR design uses a minimum of a 100 year return period for all safety related structures and a 50 year return period for all non-safety related structures. This will provide adequate coverage for a 60-year life.

Question 220.10

Since the containment is integral with the reactor building, the following are staff's concerns:

(1) The thermal and pressure effects of the containment on the reactor building, especially under severe accident conditions.

(2) The restraint effects of the reactor building floor slabs on the behavior of the containment, especially on the ultimate capacity of the containment. (The staff has not received Chapter 19 which is believed to contain the estimate of the ultimate capacity).

(3) The behavior of small and large penetrations which span between containment and reactor building, especially under severe accident conditions.

Your approaches to resolve these concerns should be provided. If the resolution is to be accomplished through testing, provide a description of the tests to be performed.

Response 220.10

The response to this question is provided in Appendix 19F.

Question 220.11

In section 3.8.4.3.1.2 it is noted that the main reinforcement in the containment wall consists of inside and outside layers of hoop and vertical reinforcement and radial bars for shear reinforcement. It appears that no diagonal seismic reinforcement is used. Indicate how the tangential shear due to horizontal earthquake is to be resisted.

Response 220.11

The tangential shear will be resisted by the hoop and vertical reinforcement bars as per ASME Code Section III Div 2, Subsection CC.

Question 220.12

In section 3.8.4.3.1.2, for the same loads considered the first load combination under item (1), if compared with the first load combination under the (2), should obviously be the governing one. It appears that a re-examination of the load combinations in this section should be made to weed out load combinations which are obviously not controlling the design unless there are errors in the combinations. Furthermore since the RB is integral with the containment, effects due to such integration should be reflected in the load combinations of structural elements or components outside the containment unless considered otherwise.

Response 220.12

(1) GE agrees that not all the load combinations under (1) and (2) of 3.8.4.3.1.2 need to be analyzed and examined if a simple comparison can weed out the load combinations which are obviously not controlling.

(2) Since the reactor building (RB) is integral with the containment, the finite element model as shown in Figure 3H.1-12 for structural analysis has integrated with RB structure, pedestal, basemat and the containment vessel as a complete model. The load combinations for the containment design have been applied for this integral model. The critical sections for various parts of the RB and the containment vessel

are shown in Figure 3H.1-21. The effects due to structural integration are included in the finite element model as well as in the load combinations. The detailed structural evaluation is given in Section 3H.1.

Question 220.13

The terms, G1, Gr and G all as defined in section 3.8.1.3.1 are not listed in Table 3.8-1 while the terms 1v and ALL listed in Table 3.8.1 are not defined. Clarification of the table is requested.

Response 220.13

Tables 3.8-1, 5 and 6 have been revised to make the notations consistent with those defined in Subsection 3.8.1.3.1.

Question 220.14

In Table 3.8-5 for load combination No. 3, it appears the acceptance criterion should be changed to S from U unless justified otherwise.

Response 220.14

The U for load combination No. 3 was a typographical error and it has been changed to S in revised Table 3.8-5.

Question 220.15

Discuss the potentials for severe accident that can be caused by external initiators such as high wind, tornado, tsunami, and earthquakes, and specifically flood since the reactor building has a standard soil embedment of 85 feet.

Response 220.15

The response to this severe accident question is provided with the responses to the Chapter 19 RAI.

Question 241.1

Table 2.01 in the Advanced BWR Standard Safety Analysis Report (SSAR) gives an envelope of ABWR plant site design parameters. This table gives the minimum bearing capacity and the minimum shear wave velocity of the foundation soil. The table also gives the values of SSE and OBE and indicates (a) that the SSE response spectra will be anchored to Regulatory Guide (RG) 1.60, and (b) that the SSE time history will envelope SSE response spectra. The following additional information/clarification should be provided in the SSAR:

(1) While the SSE (PGA) of 0.3g anchored to RG 1.60 could, in general, be considered conservative for many sites in the Central and Eastern United States, the SSAR should recognize and reflect the fact that localized exceedances of this value cannot be ruled out categorically and that adequate provisions will be made in the seismic design to consider site-specific geological and seismological factors.

(2) The SSAR gives an OBE (PGA) value of 0.10g and states that, "for conservatism, a value of 0.15g is employed to evaluate structural and component responses in Chapter 3." The staff, however, considers the OBE valve to be 0.15g as per criterion 2 of 10CFR50 Appendix A and paragraph V of 10CFR100 Appendix A which require, in part, that for seismic design considerations the OBE shall be no less than one-half of the SSE.

(3) The SSAR should indicate the procedures that would be adopted to evaluate the liquefaction potential at selected soil sites. It is not sufficient to say that the liquefaction potential will be "none at plant site resulting from OBE and SSE."

Response 241.1a

In conjunction with a SSE of 0.3g anchored to Regulatory Guide 1.60 response spectra, the ABWR seismic design bases includes site acceptance criteria (see Subsection 2.3.1.2) to be satisfied by utility applicants referencing the ABWR design. In addition to satisfying these criteria, at any site where the ABWR Standard Plant is to be used, site-specific geotechnical data will be developed by the applicant referencing the ABWR design and submitted for review by the NRC staff to demonstrate comparability with the design analyses assumptions. Satisfying the site acceptance criteria and the review and acceptance of the site-specific geotechnical data by the NRC staff will provide assurance that the site-specific geological and seismological factors are consistent for the ABWR seismic design bases.

Response 241.1b

The OBE is no longer a design requirement for the ABWR in accordance with SECY-93-087.

Response 241.1c

The COL applicant will perform site-specific liquefaction evaluation according to Subsection 2.3.2.31.

Question 251.12

Criterion 51, "Fracture Prevention of Containment Pressure Boundary", is only applicable for containments made of ferritic materials. Since the ABWR containment is made of concrete, this section should clarify the applicability of Criterion 51 to the ABWR containment. (3.1.2.5.2.1)

Response 251.12

The primary containment vessel (PCV) for the ABWR plant is a reinforced concrete structure with ferritic parts. Criterion 51, "Fracture Prevention of Containment Pressure Boundary", is applicable for containment made of ferritic materials. Thus Criterion 51 is applicable to the removable drywell head, personnel locks, equipment hatches and penetrations which are made of ferritic materials. Subsection 3.1.2.5.2.2 has been clarified accordingly.

Question 251.13
This section must include a discussion of all potential turbine missiles and mechanisms of missile generation. The turbine missile discussion should include failure of turbine discs and blades. (3.5.1.1.1.3)

Response 251.13
Response to this question is provided in revised Subsections 3.5.1.1.3, 3.5.1.4 and 3.5.4 and new Figure 3.5-2.

Question 251.14
This section must include a discussion of a favorable turbine orientation or provide a discussion on maintenance of the main steam turbine to protect against turbine missiles. (3.5.4.2)

Response 251.14
As discussed in the response to Question 251.13, the turbine generator placement and orientation of the ABWR Standard Plant now meets the guidelines of Regulatory Guide 1.115.

Question 251.15
Leak-Before-Break (LBB)—The staff considers LBB evaluations to be plant specific because parameters such as potential piping degradation mechanisms, piping geometry, materials, fabrication procedures, loads and leakage detection systems are plant specific. Therefore, the detailed LBB analysis should be provided when an application references the ABWR design (3.6.3)

Response 251.15
A detailed piping design is not part of the ABWR Standard Plant Scope. The overall layout of the plant is based on the postulated rupture approach which maximizes the piping related spacing requirements. GE is seeking NRC approval of Appendices 3E and 3F which encompass the leak-before-break (LBB) methodology that an applicant referencing the ABWR design will utilize in his detailed piping design. The NRC staff will review the applicants piping design to ensure that complies with the pre-approved LBB methodology.

Question 410.1
Section 3.5.1, “Missile Selection and Description,” states: “The missile protection criteria to which the plant has been analyzed comply with the intent of 10CFR 50 Appendix A, General Design Criteria for Nuclear Power Plants.” Provide a list of those instances where the protection criteria are in strict compliance with 10 CFR 50 Appendix A, and those instances where the protection criteria comply only with its “intent.” Provide an explanation of and justify the acceptability of those missile protection criteria which are in compliance only with “intent” of 10 CFR 50,
Appendix A. (3.5.1)

Response 410.1

As stated Subsection 3.1.2.1.4.2, "Evaluation Against Criteria 4", the design of essential structures, systems, and components are meets the requirements of Criterion 4 of the General Design Criteria (GDC). The phrase "the intent of" included in the second paragraph of Subsection 3.5.1 was included in recognition that the GDC are subject to a variety of interpretations and conformance to a particular criterion is not directly measurable (See Subsection 3.1.1 for further discussion). The ABWR design does in fact meet the requirements of Criterion 4 and Subsection 3.5.1 has been revised accordingly. The revised subsection also appropriately limits it compliance statement to Criterion 4, "Environmental and Missile Design Bases."

Question 410.2

Section 3.5.1 states: "A statistically significant missile" is defined as one which could cause unacceptable plant consequences or violation of the guidelines of 10 CFR 100." Provide an explanation of "unacceptable plant consequences." (3.5.1)

Response 410.2

Unacceptable plant consequences are those consequences that could lead to one of the following:

(1) Loss of containment function.

(2) Interfere with achieving and maintaining safe plant shutdown conditions.

(3) Leading to offsite exposures exceeding 10 CFR 100 guidelines.

These consequences are implicit in the criteria given in Subsection 3.5.1 adopted to provide an acceptable design basis for the plant's capability to withstand the statistically significant missiles postulated inside the reactor building.

Question 410.3

Section 3.5.1.1, "Internally Generated Missiles (Outside Containment)" states: "Failure rates (P1) for value bonnets are in the range of 10^{-4} to 10^{-5} per year." Provide a reference or analysis in support of the above statement. (3.5.1.1)

Response 410.3

Response to this question is provided in revised Subsection 3.5.1.1(1), and Subsection 3.5.5.

Question 410.4

Regarding the physical separation requirements, provide a list of all systems (required for safe shutdown, accident prevention or mitigation of consequences of accidents) whose redundant trains do not have missile-proof barriers, and include the minimum separation distances. Provide, for the limiting case of the minimum separation distance, an analysis demonstrating the acceptability of the approach of not calculating P2, and instead relying on the "extremely

low" probability of a missile strike to both trains, or a missile from one train striking the redundant train. (3.5.1.1)

Response 410.4

Physical separation of divisions is provided for all safety-related systems required for safe shutdown, accident prevention or mitigation of consequences of accidents. The loss of a system or a division would not impair operation of the redundant trains in the other divisions.

Question 410.5

Explain how safety-related systems or components are protected from missiles generated by non-safety-related components. It is the staff's position that missiles generated from non-safety-related components should not impact safety related components since a single active failure is assumed concurrent with the missile. (3.5.1.1)

Response 410.5

Physical separation of divisions is employed to isolate each of the safety-related divisions. No non-safety component or system that can generate a missile can with that missile prevent safe shutdown (cause an accident or prevent mitigation of consequences of accident).

Question 410.6

Discuss the means by which stored spent fuel is protected from damage by internally generated missiles. (3.5.1.1)

Response 410.6

There is no credible missile generating equipment on the refueling floor except for the load drop from the reactor building crane. The reactor building crane will not be allowed to travel over the spent fuel pool when carrying heavy loads (see Section 9.1.5 for details).

Question 410.7

Section 3.5.1.1.1.4, "Other Missile Analysis," discusses the example of analysis of a containment high purge exhaust fan for a thrown blade. Provide the details of this analysis, such as the maximum penetration of the blade and the thickness of the fan casing. Discuss whether this analysis is conservative with respect to other rotating equipment missile sources. (3.5.1.1)

Response 410.7

Because the ABWR is a standard plant, the specific details will only be available following procurement of equipment on a specific application referencing the ABWR design. Therefore, when performing potential missile assessment analysis, representative equipment is selected with judgement applied for worse case analysis. The containment high purge exhaust fan is judged to represent a worst case analysis.

The containment high purge exhaust fan from the standard BWR 6 plant was analyzed for a thrown blade at rated speed conditions as stated in Subsection 3.5.1.1.1.4. It was determined that the maximum thickness this blade could penetrate was conservatively 0.30 cm. Since the

fan casing is 0.3404 cm, the blade would not escape and consequently P_1 is less than 10^{-7} per year.

Question 410.8

Regarding Section 3.5.1.1.2.2, "Missile Analysis," provide the details of the rack, strap and cover assemble design for the pneumatic system air bottles, showing the thickness of the steel cover and the distance to the concrete slab. (3.5.1.1)

Response 410.8

Because the ABWR is a standard plant most of the specific details requested will only be available following procurement of equipment on a specific application referencing the ABWR design. The statement under item (3), Pressure Vessels, of Subsection 3.5.1.1.2.2 indicating that the bottles are not considered a credible source of missiles is based on a qualitative rather than a quantitative analysis. Item (3) of Subsection 3.5.1.1.2.2 has been revised accordingly.

Question 410.9

Regarding Section 3.5.1.1.3, "Missile Barriers and Loadings," provide a list of all local shields and barriers outside intended to mitigate missile effects, giving their specific locations and design data. Provide an example of an analysis showing that the design of the shield or barrier will withstand the most energetic missile which could credible impact it. (3.5.1.1)

Response 410.9

No local barriers or shields outside the containment are used for mitigating missile effects. Each safety-related system is contained in its own room of a Seismic Category I building. The walls, floor and ceiling of this room act as the missile barrier or shield from missiles generated outside this room.

For non-safety related components, no local shields or barriers are required. Non-safety-related components are arranged in such a way that any missile generating component is in a separate room away from safety-related components.

Question 410.10

Section 3.5.1.2.1, "Rotating Equipment" (which can contribute to internally generated missiles inside the containment, states: "By an analysis similar to that in 3.5.1.1.1, it is concluded that no items of rotating equipment inside the containment have the capability of becoming potential missiles." Provide the details of this analysis. (3.5.1.2)

Response 410.10

The similar analysis referred to in Section 3.5.1.1.1 is the breaking apart of a fan blade driven at constant speed by a synchronous motor in the containment high purge exhaust fan of a standard BWR 6 plant. Refer to the response for Question 410.7 for the details of this analysis.

Question 410.11

Regarding Reactor Internal Pump (RIP) motors and impellers which can contribute to internally generated missiles inside the containment, explain the bases for concluding that the RIPs are incapable of achieving an overspeed condition and that the motors and impellers are incapable of escaping the casing and the reactor vessel wall (SSAR Section 3.5.1.2.1). Your response should explain how the provision of an anti-rotation device at the bottom of the RIP motor which prevents backward rotation of the RIP will prevent its overspeed during the course of a LOCA or during normal plant operation when one RIP is stopped and the other RIPs are operating (see SSAR Section 5.4.1.5). (3.5.1.2)

Response 410.11

The potential for overspeed and generation of missiles by the ABWR reactor internal pumps (RIPs) has been studied and concluded that overspeed does not impact the safety of the plants as explained below.

The reverse overspeed is prevented by a mechanical backstop, antireverse rotation device, (ARD). This backstop functions like a one-way clutch. Should these devices not function, the maximum achievable speed is limited by the differential pressure (HEAD) across the RIPs and the hydraulic design of the pumps.

In the event of the normal operation, with one pump out of service, the idle pump is exposed to a differential pressure of 1.0 times the pumps rated head. This differential pressure would try to rotate the idle pump backward. The corresponding runaway speed of the idle pump (in absence of the ARD) is limited to 100% of the rated speed. Since the rotational stresses vary as square of the speed, one can estimate the stresses in the rotating part would increase by 225%. This value is well within the safety factor for pumps and motors which are designed for deflection and high cycle fatigue. Consequently, fracture and bursting of the pump impeller and motor rotor and missile generation are unlikely.

In the event of a large LOCA (pipe rupture and blowdown) the RIP will be exposed to a momentary pressure differential which is 1.38 times the RIP normal operating head. This peak pressure differential decays in 200 seconds. The average differential pressure which would force the RIPs to rotate backward is 81% of the pumps rated head. The backward driving head is less than the head for the condition of the one-pump idle, described above.

Despite the above justifications an “Impeller Missile” study has been performed and it has been demonstrated that missiles from the impeller do not have the capability to penetrate the reactor pressure vessel or the shroud walls.

In summary, the RIPs are equipped with ARDs which mitigate backward overspeed. Even if the devices were ignored the maximum achievable overspeeds do not impose a safety problem, because of the duration of the events, inherent strength of the pump, RPV and shroud, and the hydraulic characteristics of the pumps.

Question 410.12
Regarding pressurized components, provide justification for the statement, "FMCRD mechanisms are not credible missile sources," made in Section 3.5.1.2.2.

Response 410.12
As explained in Subsection 3.5.1.1.2.1 the pressure boundary containing the FMCRD mechanisms has been evaluated against the design criteria in Subsection 3.5.1. The pressure boundary including the bolted flange connections are stressed below the ASME Code limits and meet all its requirements. Furthermore, for conservativeness and to prevent the control rod drop accident, internal restraints are provided to support the FMCRD housing in the hypothetical event that the housing-to-the-nozzle weld fails or the housing fails. Therefore, it is concluded that the failure of the pressure boundary containing the FMCRD mechanisms is incredible and the FMCRD mechanisms are not credible missile sources.

Question 410.13
Regarding Section 3.5.1.2.3, "Missile Barriers and Loadings", provide the same data for internally generated missiles inside the containment, as that requested under Question No. 410.8 above. (3.5.1.2)

Response 410.13
As indicated in the responses to Question 410.8, because the ABWR is a standard plant most of the specific details requested will only be available following procurement of equipment on a specific application referencing the ABWR design. The statement that penetration of the containment walls, floors and slabs by potential missiles is not credible is based on previous BWR licensing applications.

Question 410.14
Clarify whether secondary missiles generated as a result of the impact of primary missiles have been considered. Explain how protection against credible secondary missiles is provided. (3.5.1.2)

Response 410.14
The only credible source of secondary missiles is from the formation of concrete fragments on the impact of primary missiles with structural walls and slabs. This consideration has been added to Subsection 3.5.1.2.3. In addition, an interface requirement (referenced in Subsection 3.5.1.2.3) has been added as Subsection 3.5.4.4 requiring that protection against such missiles be demonstrated.

Question 410.15
Regarding Section 3.5.1.2.3, "Evaluation of Potential Gravitational Missiles Inside Containment" Item 3, "Equipment for Maintenance," describe any interface requirements imposed by this item on applicants referencing the ABWR. (3.5.1.2)

Response 410.15
There are no interfaces requirements imposed by Item 3 of Subsection 3.5.1.2 on applicants referencing the ABWR design since all of the equipment for maintenance is within the scope of the ABWR Standard Plant. Refer to Subsections 9.1.4 and 9.1.5 for additional information.

Question 410.16
Regarding missiles generated by natural phenomena, provide the details of the tornado-missile analysis performed, identifying the tornado region (as defined in RG 1.76) and the missile spectrum. Discuss the compliance of the analysis with NUREG-0800, Section 3.5.1.4 acceptance criteria; Regulatory Guide 1.76, Positions C.1 and C.2; and Regulatory Guide 1.117, Positions C.1 through C.3 (3.5.1.4)

Response 410.16
Tornado-missile analysis was performed using ANSI/ANS-2.3-1983. Details of the missiles employed are contained therein. Since ANSI/ANS-2.3 was used instead of Regulation Guide 1.76 to determine the design basis tornado, Regulation Guide 1.76 is not being followed. Using the design basis tornado, and missile spectrum as defined in ANSI/ANS-2.3 all category I buildings meet the acceptance criteria stated in Regulation Guide 1.117.

Question 410.17
Provide specific descriptions of all provisions made to protect the charcoal delay tanks against externally generated tornado missiles. Discuss any interface requirement imposed by these design provisions.

Response 410.17
The charcoal delay tanks are protected from tornado missiles by the exterior walls of the reactor building. They are additionally protected from any secondary missiles of a tornado by placing the charcoal delay tanks in a interior room of the reactor building. There are no interface requirements imposed by these design provisions.

Question 410.18
Regarding SSC to be protected from externally generated missiles, discuss compliance with NUREG-0800, Section 3.5.2 acceptance criteria; Regulatory Guide 1.13, Position C2; Regulatory Guide 1.27, Positions C2 and C3; and Regulatory Guide 1.117, Positions C1 through C3. (3.5.2)

Response 410.18
Compliance with Regulatory Guide 1.13, Position C2; Regulatory Guide 1.117, Positions C1 through C3 and the corresponding portions of NUREG-0800, Section 3.5.2 acceptance criteria are assured by housing all ABWR Standard Plant safety-related systems and components in buildings or structures which are designed as tornado resistant. It should be noted that the new and spent fuel storage system and the diesel generators are located in the reactor building. Since the ultimate heat sink is not within the scope of the ABWR Standard Plant, compliance with Regulatory Guide 1.27, Positions C2 and C3 and the corresponding portion of NUREG-0800,

Section 3.5.2 acceptance criteria will be demonstrated by the applicant referencing the ABWR design. This has been added as a specific interface requirement in Subsection 3.5.4.1.

Question 410.19

Clarify whether all non-safety-related SSC, that may adversely impact (as a result of their failure due to an external missile) the intended safety function (i.e. achieving and maintaining safe shutdown, mitigating the consequences of an accident or preventing an accident) of a safety related SSC, are protected from external missiles. Describe how such SSC are protected. (3.5.2)

Response 410.19

All safety-related equipment are located within Category I structures. These structures are tornado and missile protected. No missile or secondary missile can reach a safety-related system without first penetrating a missile barrier of either earth (due to embedment) or thick exterior building wall.

Question 410.19a

SSAR Section 3.5.1.3.2.2, "Separation," relies on physical separation between redundant essential systems including their related auxiliary systems as the basic protective measure against the dynamic effects of postulated pipe failures. The general arrangement drawings (e.g., Figure 1.2-2) are scheduled to be submitted in December 1988. Note that additional information on Section 3.6.1 may be requested as a result of the review of the above drawings. (3.6.1)

Response 410.19a

The general arrangement drawings have been submitted. It is anticipated that additional information on Section 3.6.1 regarding physical separation may be requested by the NRC staff following review of these drawings.

Question 410.20

Section 3.6.1.1.1, "Criteria," states that the overall design generally complies with BTP ASB 3-1. Specify those criteria which are in strict compliance, and those which are not in strict compliance with the BTP. Also, provide justification for the items that are not in strict compliance. (3.6.1)

Response 410.20

The design for pipe break event protection is now in compliance with NRC Branch Technical Positions ASB 3-1 and MEB 3-1 with the commitment to the non-mandatory Appendix B of ANSI/ANS-58.2. The first paragraph of Subsection 3.6.1.1.1 has been revised accordingly.

Question 410.21

Provide a listing of all the moderate-energy piping outside the containment, but within the scope of ABWR. Also, describe how safety-related systems are protected from jets, flooding

and other adverse environmental effects that may result from pipe failures in moderate energy piping systems. (3.6.1)

Response 410.21

New Table 3.6-6 lists all of the moderate-energy piping outside the containment within the scope of the ABWR Standard Plant. Subsection 3.6.1.2 has been revised to reference this table.

The overall approach of evaluating pipe failures, high-energy and moderate-energy piping systems, is discussed in Subsection 3.6.1.3. As indicated in Subsection 3.6.1.3.1, piping failures involving moderate-energy fluid systems are evaluated for wetting from spray, flooding, and other environmental effects. Evaluation of reactor building and control building flooding events is treated in Subsections 3.4.1.1.2.1 and 3.4.1.1.2.2, respectively. The protection methods are described in Subsection 3.6.1.3.2.

The direct effects associated with a particular pipe failure must be mechanically consistent with the failure. Thus, to properly apply the protection methods, the actual pipe dimensions, pipe routings, material properties, equipment (such as valves and valve operators) and the detailed piping stress analyses must be available to define the specific measure for protection against the associated consequences of the postulated piping failure. For the ABWR Standard Plant, the nominal piping diameters and the overall pipe routings are specified. However, the actual piping dimensions, material properties and the equipment, and the associated piping stresses are dependent on the specific applicant referencing the ABWR design. Hence, the applicant referencing the ABWR design will describe how safety-related systems are protected from jets, flooding and other adverse environmental effects that may result from pipe failures in moderate-energy piping systems. An interface requirement has been added to Subsection 3.6.4.1 requiring that the applicant referencing the ABWR design provide descriptions on how safety-related systems are protected from jets, flooding and other adverse environmental effects that may result from pipe failures in moderate-energy piping listed in Table 3.6-6.

Question 410.22

Justify the non-inclusion of pipe failure analyses for the Process Sampling System, Fire Protection System, HVAC Emergency Cooling Water System and the Reactor Building Cooling Water System as related to the Ultimate Heat Sink. Provide a summary table listing the protective measures provided against the effects of postulated pipe failures in each of the above systems and the systems listed in SSAR Tables 3.6-2 and 3.6-4. (3.6.1)

Response 430.22

Tables 3.6-1 and 3.6-2 have been updated to the process sampling system, fire protection system, HVAC emergency cooling system and the reactor building cooling water system as related to the ultimate heat sink.

As noted in the response to Question 410.22, to properly apply the protection methods, the actual pipe dimensions, pipe routings, material properties, equipment and the detailed piping stress analyses must be to define the specific measure for protection against the associated

consequences of the postulated piping failure. Since this information will not be available until applicant references the ABWR design in a specific licensing application, the applicant referencing the ABWR design will submit the requested listing of the protective measures provided against the effects of postulated pipe failures in each of the systems listed in Tables 3.6-1, 3.6-2 and 3.6-4. This has been added as an interface requirement to Subsection 3.6.4.1.

Question 410.23

Give details for the worst case flooding arising from a postulated pipe failure and include the mitigation features provided. Note that for flooding analysis purposes, the complete failure of non-seismic Category I moderate-energy piping systems should be considered in lieu of cracks in determining the worst case flooding condition. (3.6.1)

Response 410.23

Subsection 3.4.1.1.2 contains descriptions and evaluations of compartment flooding from postulated pipe failures, and provides a description of measures for protecting safety-related systems and components. Consistent with ANSI/ANS 58.11-1988 (American National Standard Design Criteria for Protection Against Compartment Flooding in Light Water Reactor Plants) and ANSI/ANS 58.2-1988 (American National Standard Design Basis for Protection of Light Water Reactor Nuclear Power Plants Against the Effects of Pipe Rupture), these flooding evaluations assume leakage cracks with a flow area equal to the product of one-half the pipe inside diameter and one-half the pipe wall thickness.

Question 410.24

Identify all the high-energy piping lines outside the containment (but within the ABWR scope), the adverse effects that may result from failures of applicable lines among them, and the protection provided against such effects for each of such lines (e.g., barriers and restraints). (3.6.1)

Response 410.24

The high-energy lines outside the containment are provided in Table 3.6-4. The adverse effects that may result from failures of applicable lines among them, and the protection provided against such lines is addressed in response to Question 410.22.

Question 410.25

Clarify whether the reactor building steam tunnel is part of the break exclusion boundary. Also, provide a subcompartment analysis for the steam tunnel. Discuss how the structural integrity of the tunnel and the equipment in the tunnel are protected against failures in the tunnel. (3.6.1)

Response 410.25

A subcompartment analysis for the reactor building steam tunnel is provided in Subsection 6.2.3.3.1. The steam tunnel has been designed for the worst case line break plus other appropriate loads per ACI349. The valves and pipes in the steam tunnel will be qualified for the environment, plus shielded from jet loads. All safety-related pipes and valves will be protected from whipping pipes.

Question 410.26
State how the MSIV functional capability is protected. (3.6.1)

Response 410.26
As noted in the response to Question 410.22, to properly apply the protection methods, the actual pipe dimensions, pipe routings, material properties, equipment and the detailed piping stress analyses must be available to define the specific measure for protection against the associated consequences of the postulated piping failure. Since this information will not be available until an applicant references the ABWR design in a specific licensing application, the applicant referencing the ABWR design will submit the details of how the MSIV functional capability is protected. This has been added as an COL license information requirement and added to Subsection 3.6.5.1.

Question 410.27
Provide a summary table of the findings of an analysis of a postulated worst-case DBA rupture of a high or moderate-energy line for each of the following areas: 1) RCIC compartment, 2) CUW equipment and valve room, 3) other applicable areas outside the containment (e.g., housing RHR piping). (3.6.1)

Response 410.27
The compartment pressurization effects of postulated worst-case DBA ruptures in the areas above are described in Subsection 6.2.3.3.1. Findings of analyses of other postulated pipe rupture effects on these areas will be provided by applicant referencing the ABWR design as specified in Subsection 3.6.4.1.

Question 410.28
Clarify whether protection for safety-related systems and components against the dynamic effects of pipe failures include their enclosures in suitable design structures or components, drainage systems and equipment environmental qualification as required. If so, give typical examples for the above type of protection.

Response 410.28
The ABWR plant arrangement provides physical separation to the extent practicable to maintain the independence of redundant essential systems (including their auxiliaries) to prevent the loss of safety function due to any single postulated piping failure. Redundant trains and divisions are located in separate compartments. Physical separation between redundant essential systems, therefore, is the fundamental protective measure incorporated in the ABWR design to protect against the dynamic effects of postulated piping failures. The ABWR design employs a radioactive drain transfer system which drains floor areas to prevent structural over loading. Also, all safety-related equipment must be qualified to the regionalized environmental conditions specified in Section 3.11 (and Appendix 3I). While localized special enclosure structures are not anticipated for the ABWR design, a few such structures may result in the detailed implementation of the protection criteria. An interface requirement has been added to Subsection 3.4.6.1 requiring the applicant referencing the ABWR design to provide typical

examples of protection for safety-related systems and components against the dynamic effects of pipe failures including their enclosures in suitable designed structures or compartments (including any additional drainage system or equipment environmental qualification needs).

Question 410.29

Regarding interfaces (Section 3.6.4.1), include results of analyses of moderate-energy piping failures (currently, the interface requirements address only the high-energy piping failures analyses). (3.6.1)

Response 410.29

The information required by Subsection 3.6.2.5 of Regulatory Guide 1.70 pertains to dynamic analyses applicable to high- and moderate-energy piping systems resulting from pipe breaks and cracks. However, Branch Technical Positions ASB 3-1 and MEB 3-1 only require dynamic analyses of high-energy piping system postulated pipe breaks. The leakage cracks postulated for moderate-energy piping systems are included to evaluate concerns associated with such events such as flooding and compartment pressurization. Therefore, there are no applicable dynamic analyses applicable to moderate-energy piping systems.

Question 410.29a

Appendix 3I, “Equipment Qualification Environmental Design Criteria,” is scheduled to be submitted in December 1988. Note that additional information may be requested based on review of the above appendix. (3.11)

Response 410.29a

Appendix 3I was submitted March 31, 1989.

Question 410.30

Although there are no detailed equipment qualification requirements for safety-related mechanical equipment in a harsh environment, GDC 1, “Quality Standards and Records,” GDC 4, “Environmental Missile Design Bases,” and Appendix B to 10 CFR 50, “Quality Assurance Criteria for Nuclear Power Plants and Fuel Processing Plants” (Sections III, “Design Control,” and XVII, “Quality Assurance Records”) contain the following requirements related to equipment qualification:

(1) Components shall be designed to be compatible with the postulated environmental conditions, including those associated with LOCAs.

(2) Measure shall be established for the selection and review for suitability of application of materials, parts, and equipment that are essential to safety-related functions.

(3) Design control measures shall be established for verifying the adequacy of design.

(4) Equipment qualification records shall be maintained and shall include the results of tests and material analyses.

Clarify whether the design complies with all the above requirements for safety-related mechanical equipment in a harsh environment within the ABWR scope. Provide justification for the non-compliance items above and identify any interface requirements needed to comply with the above. (3.11)

Response 410.30

The ABWR design complies with all the above requirements for safety-related mechanical equipment in a harsh environment within the ABWR scope.

While there are no formalized NRC equipment qualification requirements for safety-related mechanical equipment in a harsh environment GE has successfully supported numerous NTOL applicants in developing a mechanical equipment qualification program which is consistent with the NRC's position on mechanical equipment as stated in SRP 3.11. The mechanical equipment qualification program to be applied to the ABWR will use applicable portions of the NRC approved Licensing Topical Report NEDE-24326-1-P and Regulatory Guide 1.89, Revision 1; and will be consistent with the program for qualification of mechanical equipment in a harsh environment described in the NRC approved GESSAR II design. The ABWR program scope looks not only at the metallic components of the equipment but also the nonmetallic components. Metallic components which form a pressure boundary are considered to be qualified by the nature of their pressure retention capability as demonstrated by the application of an ASME Boiler and Pressure Vessel Stamp. Nonmetallic, such as greases, gaskets, lubricants, etc., will be shown to be capable of performing their intended functions under accident environments. The design of safety-related mechanical equipment associated with the ABWR will be performed under the same internal procedural controls as that used for the design of mechanical components associated with the GESSAR II design. These controls assure that components are designed to be compatible with their postulated operating environments, that measures are established for the selection and review of the suitability of application of the material, parts, and equipment that are essential to safety-related functions, and that there are design control measures for verifying the adequacy of the design. As stated in NEDE-24326-1-P a complete set of qualification records are developed for each safety-related component.

Since the ABWR Standard Plant comprises the entire scope of safety-related equipment there are no interface requirements in this area.

Question 451.1

What are the bases (including references) for the site envelope of the ABWR design meteorological parameters listed in Table 2.0-1? Are these values intended to reflect the indicated maximum historical values for the contiguous USA? What is the combined winter precipitation load from the addition of the 100-year snow pack and the 48-hour probable maximum precipitation? What is the duration of the design temperature and wind speed values? What gust factors are associated with the extreme winds? Are any other meteorological factors (e.g., blowing dust) considered in the ABWR design?

Response 451.1

A detailed description of all site characteristics is not practical for a standard design which is not based on a specific site location. However, it is possible to define an envelope of selected site-related parameters which will blanket the majority of potential nuclear sites in the conterminous United States. This envelope of site-related parameters establishes the conditions of phenomena which the ABWR Standard Plant is designed to accommodate. These characteristics and the specific bounding values were chosen after reviewing the corresponding parameters used in recently licensed plants and potential nuclear sites, provide the bases for design of the ABWR Standard Plant. There are no other meteorological factors considered in the ABWR design except for the determination of atmospheric dispersion factors which follow the guidance of Regulatory Guides 1.3 and 1.145 as described in the response to Question 451.2.

Question 451.2

Short-term dispersion estimates for accidental atmospheric releases are not provided explicitly in Section 2.4.3. If your X/Q values which are listed in Chapter 15 represent an upper bound for which the ABWR is designed; what are the bases for their selection?

Response 451.2

The X/Q values found in Chapter 15 do not necessarily form an upper basis for evaluation of design basis accident conditions. Since there is no detailed regulatory guidance on standard plant site parameters, recourse was made to existing regulatory guides. The X/Q values found in Chapter 15 for offsite dose analysis were calculated using a subroutine of the CONAC03 code (Reference 2, Subsection 15.6.7) using the methodology found in the Murphy/Campe paper (Reference 4, Subsection 15.6.7).

Table 20.3.3-1 Verification Matrix for SASSI Ver. 1.0 (Response to Question 220.3)

Area of Verification	Verification Problems																					
	1	2	3	4	5	6	7	8	9	10	11	12	13	14	15	16	17	18	19	20	21	22
A) Finite Element Library																						
1. 3D spring element								x	x													
2. 3D beam element								x	x													
3. 3D solid element								x	x													
4. Plate/shell element								x	x													
5. Stiffness/mass element								x	x													
6. 2D plane strain element								x	x													
7. Response								x	x													
B) Impedance Analysis																						
1. Rigid Surface Foundation on Uniform Halfspace																						
1.1 Circular Foundation		x										x			x							
1.2 Strip Foundation														x								
2. Rigid Surface Foundation on Layer Soil System																						
2.1 Circular Foundation				x																		
2.2 Strip Foundation														x								
3. Flexible Surface Foundation on Uniform Halfspace																						
3.1 Rigid-Flexible Foundation						x																
3.2 Totally Flexible Foundation													x									
C) Scattering Analysis																						
1. Vertically Propagating Body Waves																						

Table 20.3.3-1 Verification Matrix for SASSI Ver. 1.0 (Continued) (Response to Question 220.3)

Area of Verification	Verification Problems																					
	1	2	3	4	5	6	7	8	9	10	11	12	13	14	15	16	17	18	19	20	21	22
1.1 Free-Field	x																					
1.2 Embedded Foundation					x						x					x						x
2. Inclined Body Waves																						
2.1 Surface Foundation																	x					
2.2 Surface Foundation							x														x	
D) SSI Analysis																						
1.1 Single Foundation		x	x															x	x	x		
1.2 Multiple Foundation																						
1.2.1 3-D Analysis										x												
1.2.2 2-D Analysis										x												

Table 20.3.3-2 Not Used

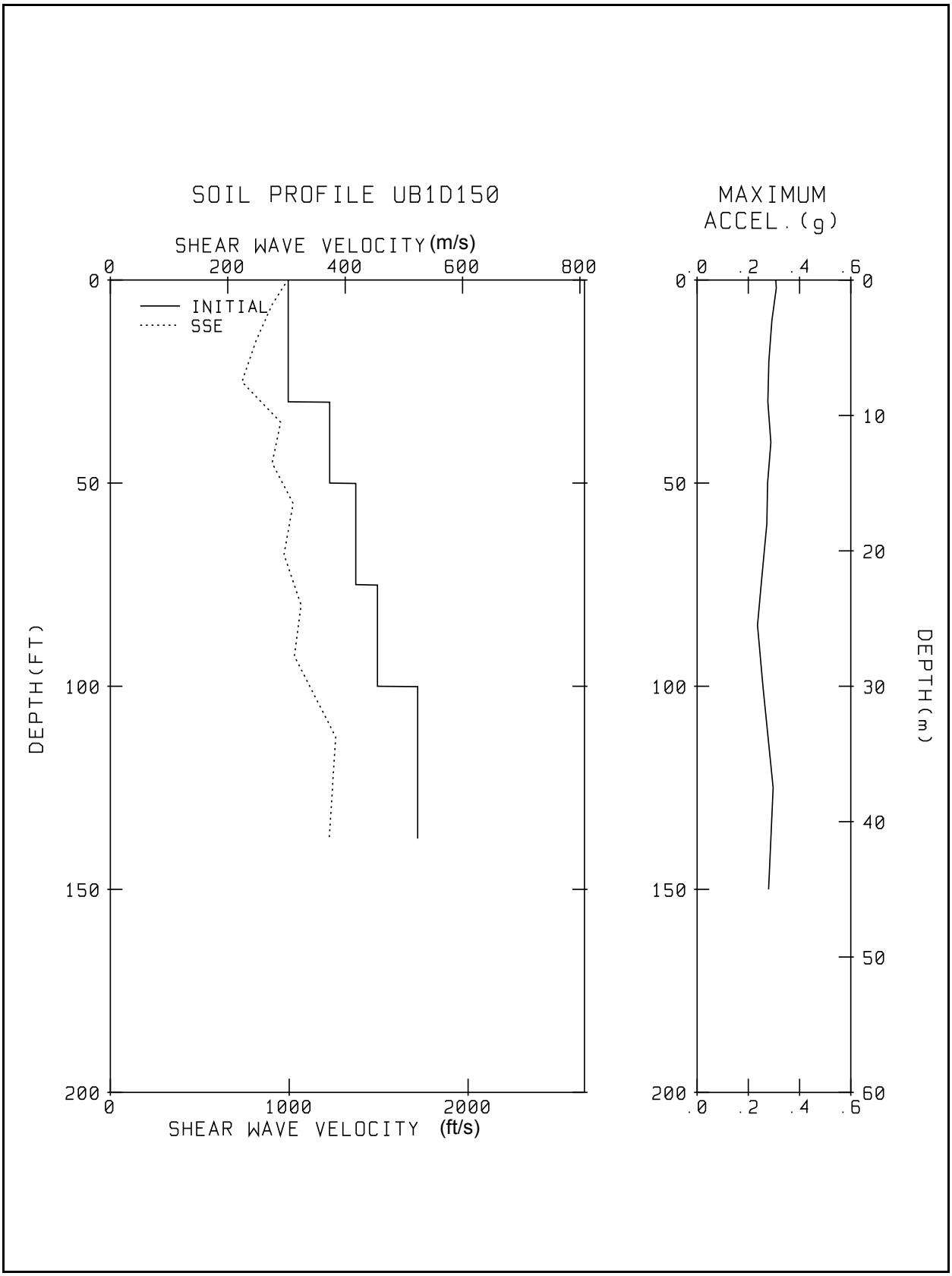

Figure 20.3.3-1 Shake Analysis Results – Soil Profile UB1D150 (Response to Question 220.8)

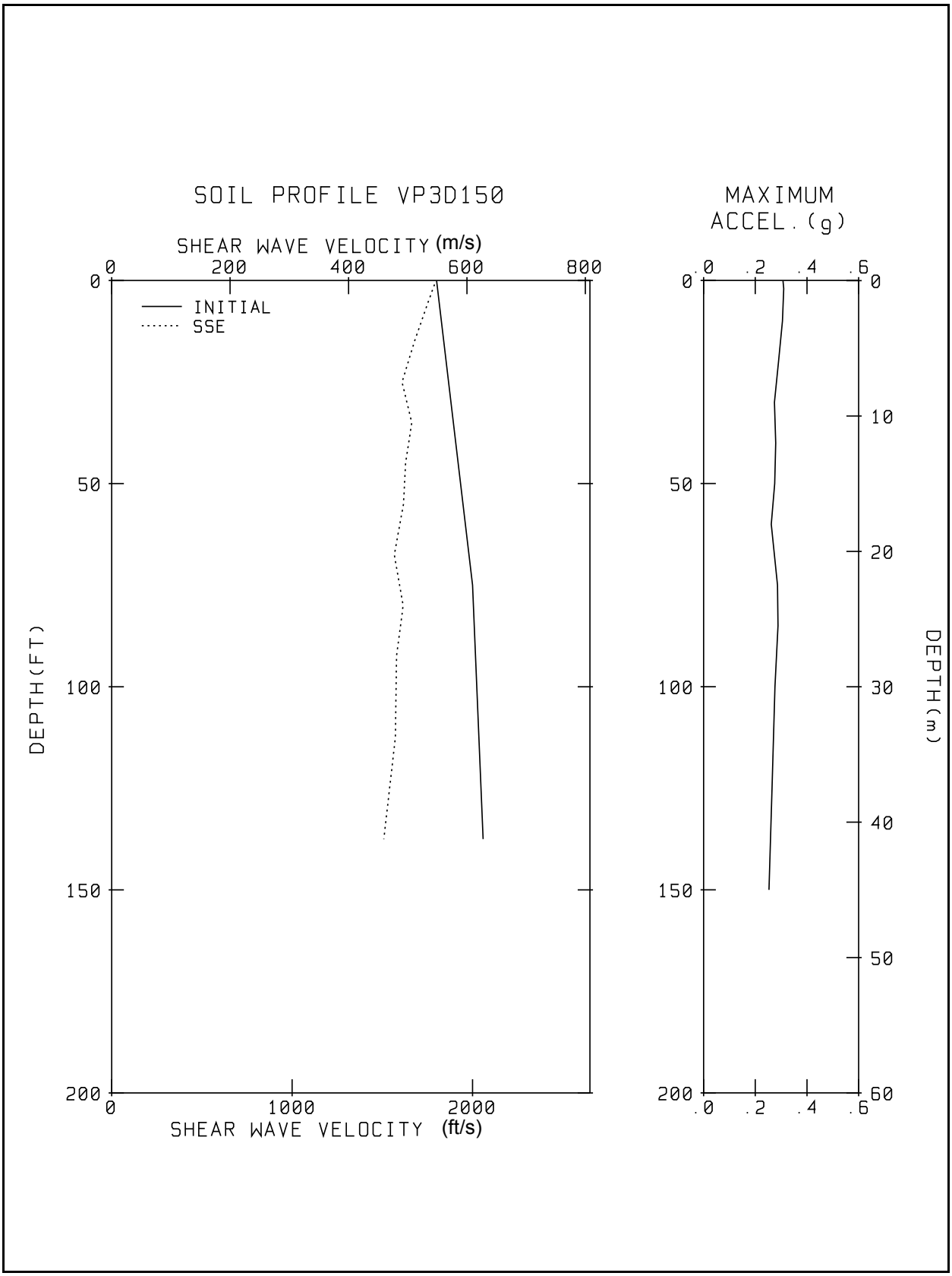

Figure 20.3.3-2 Shake Analysis Results – Soil Profile VP2D150 (Response to Question 220.8)

20.3.4 Response to Fourth RAI — Reference 4

Question 440.13

ODYNA and REDYNA are the improved versions of NRC approved ODYN and REDY Codes. Describe the changes made in the codes. The staff requires approval of these codes before the final design approval.

Response 440.13

The response to this question is provided in Appendix 20A.

Question 440.14

Information given in NEDE-24011-P-A is not sufficient to demonstrate compliance with the ASME code. The ASME Code Section III, Article NB-7200, requires that an overpressure protection report be prepared. Provide this report for the staff review.

Include the following items in the report:

(1) Provide all system and core parameter initial values assumed in the overpressure analyses. Include their nominal operating range with uncertainties and Technical Specification limits.

(2) Scram time characteristics.

(3) Safety/relief valve characteristics.

(4) Demonstrate available safety margin considering the most limiting transients.

(5) Peak vessel bottom pressure versus time for the limiting transients.

(6) Provide graphical representation for peak vessel bottom pressure versus safety/relief valve capacity and number of safety/relief valves used for the most limiting transient.

(7) Identify conservatisms used in the overpressure transient analyses.

Response 440.14

An overpressure protection report will be submitted during the application of a construction permit. However, transient analysis for vessel overpressure protection has been documented in Subsection 5.2.2.2. The following are responses to specific questions:

(1) The initial values of system and core parameters assumed in the overpressure analysis are listed in Subsection 5.2.2.2.2.1 are:

	Value Analysis	Nominal Value
(a) Operating Power		
- MWt	4005	3926
- % NBR	102	100
(b) Vessel Dome Pressure		
- MPaG	7.17	7.07
(c) Steamflow		
- kg/h	34.12	37.13
- % NBR	102.7	100

The operating power and steamflow will be limited by the operating license to their nominal values. It is not necessary to have a technical specification on the operating dome pressure, since it is limited by the pressure scram setpoint. As shown in the response to Question 440.16, the overpressure protection system has enough margin to account for variation in the operating pressure up to the pressure scram setpoint.

(2) The scram time characteristics are shown in Table 15.0-6.

(3) In the overpressure protection analysis, only the operation of the safety mode of all safety/relief valves is assumed. The safety mode characteristics are shown in Figure 5.2-1.

(4) The most limiting transient (i.e. MSIV closure with flux scram) has been analyzed and its results summarized in Subsection 5.2.2.2.3.1 and Figure 5.2-2.

(5) The peak vessel bottom pressure versus time for the limiting transient (i.e., MSIV closure with flux scram) is shown in Figure 20.3.4-1.

(6) The peak vessel bottom pressure versus safety/relief valve capacity and number of safety/relief valves for the most limiting transient (i.e. MSIV closure with flux scram) is shown in Figure 20.3.4-2.

(7) The conservatisms in the following areas are included in the overpressure transient analysis:

(a) Initial conditions:	See (1) above.
(b) Nuclear conditions:	EOEC conditions are used.
(c) Scram Characteristics:	Technical Specification Limits are used.
(d) Safety Setpoints:	Analytical limits are used.
(e) Safety/Relief Valves:	Only the safety mode is assumed.
(f) Scram initiation:	Flux scram instead of position scram

Question 440.15

Confirm that the overpressure analysis includes the effects of the ATWS reactor recirculation pump trip on high reactor pressure.

Response 440.15

Yes, the effects of the ATWS reactor recirculation pump trip on high reactor pressure are included in the overpressure analysis.

Question 440.16

Provide the sensitivity study which shows that increasing the initial operating pressure (up to the maximum permitted by the high pressure trip setpoint) will have a negligible effect on the peak transient pressure.

Response 440.16

The overpressure analysis shown in Subsection 5.2.2.2 assumed the plant is initially operating at 102% NBR power with a maximum vessel dome pressure of 7.17 MPaG. The expected maximum operating pressure at 100% power is to be 7.07 MPaG. Therefore, the assumed initial operating pressure is conservative relative to expected actual operation. In addition, the operating pressure will be momited by the pressure scram setpoint, whose analytical limit is 7.62 MPaG. A study has been performed for BWR/3 to investigate the effects of increasing the initial reactor pressure relative to the initial value used in the overpressure protection analysis on the peak system pressure. The conclusion was that increasing the initial operating pressure results in an increase of the peak system pressure, which is less than half the initial pressure increase as shown in Figure 20.3.4-3 for the overpressure limiting transient (i.e., MSIV closure with flux scram). The same general trend is expected to exist for ABWR. For ABWR, the analytical limit for the pressure scram is 7.62 MPaG. Therefore, the maximum increase in the

initial pressure would be limited to only 7.62 - 7.17 MPaG, and the maximum peak vessel pressure increase during the overpressure transient would be limited to less than 0.173 MPaG. Hence, the peak vessel pressure would be less than 8.96 MPaG, which still satisfies the overpressure criteria.

Question 440.17

The performance of essentially all types of safety/relief valves has been less than expected for a safety component. Because of reportable events involving malfunctions of these valves on operating BWRs, the staff is of the opinion that significantly better safety/relief valves performance should be required of new plants. Provide a detailed description of improvements between your plant and presently operating plants in the areas listed below. In addition, explain why the noted difference will provide the required performance improvement.

(1) "Weeping" of SRVs is a generic problem. The following table explains the seriousness of the problem.

Comparison of BWR/6s "Weeping" SRVs

Plant	"Weeping" SRVs Total No.
Clinton	3/16
River Bend	12/19
Grand Gulf	11/20
Grand Gulf (after all valves changed during 1st refueling)	6/20
Perry	18/19

The continuous "weeping" of the SRV has the potential to degrade SRVs and increase the frequency of use of RHR heat exchangers.

How will the ABWR SRVs resolve the generic problem stated above?

(2) **Valve and valve operator type and/or design**—Include discussion of improvements in the air actuator, especially materials used for components such as diaphragms and seals. Discuss the safety margins and confidence levels associated with the air accumulator design. Discuss the capability of the operator to detect low pressure in the accumulator(s). Provide detailed description of safety and relief mode of operation/function of the SRV.

(3) **Specifications—**What new provisions have been employed to ensure that valve and valve actuator specifications include design requirements for operation under expected environmental conditions (esp. temperature, humidity, and vibration)?

(4) **Testing**—Prior to installation, safety/relief valves should be proof tested under environmental conditions and for time period representative of the most severe operating conditions to which they may be subjected.

(5) **Quality Assurance—**What new programs have been instituted to assure that valves are manufactured to specifications and will operate to specifications.

(6) **Valve Operability—**Provide a summary of the surveillance program to be used to monitor the performance of the safety/relief valves. Identify the information that will be obtained and how these data will be utilized to improve the operability of the valves.

(7) **Valve Inspection and Overhaul—**Operating experience has shown that safety/relief valve failure may be caused by exceeding the manufacturer's recommended service life for the internals of the safety/relief valve or air actuator. At what frequency do you intend to visually inspect and overhaul the safety/relief valve? For both safety/relief and ADS modes, what provisions exist to ensure that valve inspection and overhaul are in accordance with the manufacturer's recommendations and that the design service life would not be exceeded for any component of the safety/relief valve?

Response 440.17

(1) **SRV Performance (Leakage)**—Requirements for SRV production testing in the ABWR SRV specification include extremely low limits on leakage rate (zero leakage using cold bar method). The testing is required to be conducted at 90% of set pressure which is a higher inlet pressure than that which will be applied to the SRV inlet during normal plant operation. Spring design includes requirements to minimize spring relaxation.

Temperature elements are mounted in the SRV discharge lines, thereby permitting identification of any valves which are beginning to leak.

Additionally, the maintenance interval has been reduced from five years (as required by ASME Code) to three years. This will assure more frequent refurbishment of the SRVs, including lapping as necessary to keep leakage to a minimum.

(2) **SRV Performance (Valve Operator)—**Environmental (including dynamic) qualification of the ABWR SRV, including the actuator system for ADS function, will be in accordance with IEEE-323, IEEE-344, and IEEE-382 requirements. This

qualification will be performed on the entire actuator system, not just on the electrical components, to assure that pneumatically active portions of the system are also adequate to perform as required.

Air accumulator volume for ADS function is sufficient to open the ADS SRVs without makeup air/N2 at least once under even the most severe conditions of postulated drywell pressure. The same volume is also sufficient to provide multiple openings of each ADS SRV at lower pressures (at least two openings at seventy percent of drywell design pressure, 5 at normal drywell conditions). If the drywell temperature increased from normal to postulated severe accident maximum and the SRVs were not operated, pneumatic pressure could increase beyond the maximum operating pneumatic pressure. Accumulator and SRV actuator system pneumatic design pressure is high enough that it exceeds the highest pneumatic pressure that would occur under these drywell conditions.

Pressure transmitters and alarms are mounted in the normal and emergency pneumatic supply lines to the ADS SRV accumulators.

Detailed descriptions of the requirements for safety and relief functions of the SRV are provided in the SRV equipment specification. The functional requirements are similar to those for direct acting SRVs used on current GE BWR/6 plants. In the relief mode of operation, the stem is required to be guided to prevent galling. Interference with the safety mode of operation from relief actuation components or position indication hardware is strictly prohibited.

(3) **SRV Performance (Valve Specifications)**—The environmental qualification testing program to which the ABWR SRV model will be subjected is described in the above response (first paragraph of the response Item (2)). In addition to the environmental qualification requirements of the SRV specification, GE has prepared a new generic environmental qualification requirements document for ABWR. This document provides detailed qualification guidelines for all safety-related ABWR equipment. This document provides for NUREG-0588 type equipment qualification.

(4) **SRV Performance (Testing)**—Proof testing is contained in the SRV specification. It consists of both engineering tests (called “Design Confirmation Tests” in the SRV spec.) and “Environmental Qualification Tests”.

(5) **SRV Performance (Quality Assurance)**—The GE quality assurance programs and controls which apply to all safety-related nuclear work are applicable to the design of the ABWR SRV. In addition, the engineering tests required for the SRV include tests for operability and operating characteristics in both the relief and safety modes of operation. For example, to meet capacity requirements for overall plant blowdown, the valve model is tested and a rated capacity is established for each valve at 103% of the nameplate set pressure. Rated capacity is established in accordance

with ASME requirements. The number of SRVs required in the main steam lines is determined on the basis of the analysis of the limiting overpressure transient. Variance in blowdown characteristics of individual SRVs and blowdown response to backpressure are among the operability topics to be tested. Unless the SRV supplier can demonstrate a high degree of predictability in SRV blowdown adjustment, the SRVs will be required to be individually adjusted for blowdown on a full flow steam facility based on expected backpressure, as adjusted by restricting the test facility exhaust line). When used in conjunction with individual SRVs, the term "blowdown" represents the difference between the actual set and reset pressures of the valve.

(6) **RV Performance (Operability)**—Each ABWR SRV will be supplied with an LVDT, which will indicate when it is actuated in either the safety or relief mode. This LVDT is planned to be used as an open/close monitor, but it also provides the capability for position monitoring. It gives the plant operator the capability to identify the operating history of each SRV. This information can be used in many ways to improve SRV performance. For example, it can indicate which valves have been operated frequently and may therefore be candidates for early maintenance, or it can identify need for refurbishment based on failure to operate as expected or changes in operating characteristics.

Operating surveillance of SRV reliability to operate in the relief mode is performed at intervals in most plants. This is done by stroking the valve using the actuator system. Vendor recommendations, test results, and operating history and experience form the basis for this kind of operational surveillance.

Also, surveillance and refurbishment at regular maintenance intervals is expected to include leakage test and set point check, and parts replacements.

(7) **SRV Performance (Valve Maintenance)**—The maintenance interval currently specified for the ABWR SRV is three years. Monitoring of the stem position and discharge line temperature will provide indications of any SRVs that should be refurbished at the next outage, rather than at the planned interval.

It is ultimately the owner's responsibility to ensure that qualified life is not exceeded and manufacturer's recommendations are followed. GE will assure to the best of our ability that adequate provisions and recommendations for inspection and overhaul, consistent with qualification program results, are included in the suppliers documentation and instructions provided to the owner with the SRVs.

In addition, programs are currently in place at GE to alert owners of equipment events and concerns occurring at other plants with similar equipment. These programs will be extended to ABWR customers as well.

Question 440.18
Address the following TMI-2 action items related to SRVs.

(1) II.K.3.16

(2) II.B.1

(3) II.D.3

(4) II.K.3.28

(5) II.D.1

Response 440.18
The response to this question is provided in Appendix 1A.

Question 440.19
Explain in detail how the spring and relief modes of the SRV works. Are they an difference from the SRVs currently used in operating BWRs?

Response 440.19
It is currently anticipated that the basic ABWR SRV configuration will be very similar to that of direct acting SRVs used on BWR/6 plants. The spring is used to provide the force to the SRV stem, which in turn forces the disk down on the valve seat, capturing the steam on the inlet side of the valve. When the steam pressure increases so that its force is equal to the downward force provided by the spring, the disk and stem begin to lift. As this happens, the steam pressure acts over a larger area of the disk and the valve opens quickly. This actuation using pressure to overcome spring force is safety mode actuation. In relief mode actuation, an actuator system uses a large pneumatic piston to lift a lever which in turn lifts the valve stem against the force of the spring. This system is driven by one or more solenoid operated pneumatic valves and normally has an intermediate stage pneumatic valve (one driven by each solenoid valve) to provide the required pneumatic flow rate to the piston. This pneumatically driven method of operating the SRV (the relief mode of operation) must never interfere with operation of the SRV in the safety mode.

The main spring of the ABWR SRV may be a double spring configuration or a set of Belleville washers. The main spring(s) will be controlled by specification requirements and manufacturing standards to provide smooth operating and relative motion characteristics and to minimize SRV set point drift due to spring relaxation. The valve stem will be guided to preclude any tendency to cock or gall.

The ABWR could use a pilot operated valve. This type of valve has a pilot stage which acts as a small direct acting valve. When the pilot stage opens, steam is redirected inside the valve so that the main disk opens. The relief mode actuator is connected to the pilot stage.

Question 440.20
What ATWS considerations have you given for sizing SRVs?

Response 440.
The most limiting ATWS event (i.e., MSIV closure) has been analyzed. The peak vessel bottom pressure for this case is 8.96 MPaG, which is well below the ATWS overpressure criterion of 10.34 MPaG.

Question 440.21
In Subsection 5.2.2.2.2.3 the reclosure pressure setpoint (% of operating setpoint) for both modes are given as 98 and 93. Explain the significance of these numbers.

Response 440.21
Subsection 5.2.2.2.2.3 has been revised to reflect SRV safety mode reclosure points consistent with new ABWR requirements. These new requirements are 96% of nameplate opening setpoint (4% blowdown) to 90% of nameplate setpoint (10% blowdown). The lower reclosure limit (10% blowdown) is based on JIS Standard B8210-1986 and reflects a requirement imposed by MITI on plants built in Japan. It is a reasonable lower limit for two reasons: (1) It makes sense, economically, not to let more steam escape from the reactor system than is necessary to protect the system within a reasonable safety margin. (2) It provides an effective lower limit from a system standpoint so that SRV opening and reclosure in the safety mode occur at a higher pressure than the respective "normal" opening and reclosure in the relief mode (i.e., as normally initiated by pressure sensors in the steam lines).

The upper reclosure limit (reclosure point at 96% of opening setpoint) is a reasonable upper limit which will serve to limit the number of times the SRV will open and reclose in case of a pressure transient causing valve operation in the safety mode. It permits the valve to remain open longer and cycle less often (as compared with prior allowed upper reclosure limits, which were set at 97% and 98% of opening setpoint in the past).

The 96% upper limit also provides an extra measure of insurance that deviations in manufacturing tolerances, actual back-pressure in service, and other such variables do not result in an SRV with negative blowdown, in which buildup of backpressure would reclose the valve before it could perform its pressure relief function.

Question 440.22
In Figure 5.1.3a the SRV solenoid valves are not shown as DC powered as they should be. Note 8 states that "valve motor operators and pilot solenoids are ac operated unless otherwise specified."

Response 440.22
At the next revision, Figure 5.1.3a will be revised to show that the SRV solenoids are DC powered.

Question/Response 440.23
This question number not used.

Question 440.24
Confirm that SRVs are designed to meet seismic and quality standards consistent with the recommendations of Regulatory Guides 1.26 and 1.29.

Response 440.24

(1) The SRVs are classified as Quality Group A and Seismic Category I as shown in Table 3.2-1. The SRVs are designed to meet Regulatory Guides 1.26 and 1.29. Tests required by ASME Code Section III for Class I valves are imposed in the ABWR SRV equipment specification. Analyses equivalent to those required by ASME III are performed in accordance with the requirements of MITI-501 (the Japanese equivalent of ASME III).

(2) SRVs are Class IE (active, safety related, electrically driven). It is currently planned to impose a complete environmental qualification program on the entire SRV, including both electrically and pneumatically driven components of the actuator system. This program includes dynamic qualification of operability following the Japanese equivalent of an SSE. This program will be in compliance with NUREG-0588 requirements.

Questions/Responses 440.25 through 440.27
These questions numbers not used.

Question 440.28
In SSAR Table 1.8-19, it is stated that branch technical position RSB 5-2 is applicable for ABWR. How does the ABWR design comply with BTP RSB 5-2?

Response 440.28
The entry for BTP RSB S-2 in Table 1.8-19 was in error and has been corrected to show “not applicable” to the ABWR.

Question 440.29
Describe the methods planned for performing hydrostatic tests on ABWR RPV vessel after the initial start-up. Can you perform hydrostatic tests and leak tests without using critical heat?

Response 440.29
System leakage and hydrostatic pressure test will be performed in accordance with IWB-5000 as stated in Subsection 5.2.4.7. It is expected that testing for ABWR RPV will be done similarly to that of currently operating BWRs without critical heat. Typically, this involves using the developed head of the CRD and/or RWCU pumps to pressurize the reactor water against a small pocket of air at the top of the bottled up vessel. Pumping heat from the reactor internal pump (RIPs), supplemented by reactor decay heat, will be used to maintain the vessel temperature

above the applicable minimum temperature limit of Figure 5.3-1. For the ABWR, with its expected lower initial RT_{NDT} and its lower fluence at the vessel wall, the minimum temperature curve is not expected to shift significantly, if at all, over the life of the plant. Therefore, because the total pumping heat of the RIPs is on the same order of magnitude as that from the recirc pumps of current BWRs, it is anticipated that hydrostatic testing can be fully supported without reliance on critical heat.

Question 440.30

In SSAR Section 7.7.1.2, Section 4, it is stated that: "The Rod Control and Information System (RCIS) is not classified as a safety related system, it has a control design basis only and is not required for the safety and orderly shutdown of the plant. A failure of RCIS will not result in fuel damage. The Rod block Functions of the RCIS, however, are important in limiting the consequences of a rod withdrawal error during normal plant operation. An abnormal operating transient that might result in local fuel damage is prevented by the rod block enforcement functions of the RCIS."

If credit for RCIS is assumed in the analysis of the rod withdrawal transient to meet the GDC 10 requirement that "specified acceptance fuel design limits (SAFDL) will not be exceeded," the staff requires that RCIS satisfies GDC-1 which states that "structures, systems and components important to safety must be designed, fabricated, erected and tested to quality standards commensurate with the safety function to be performed."

Response 440.30

Subsection 7.7.1.2 (4) states that "A failure or the RCIS will not result in GROSS fuel damage." Certain MULTIPLE failures of the RCIS can be postulated that could result in LOCAL fuel damage. However, such multiple failures are not considered credible for the following reasons:

(1) The rod control and information system (RCIS) is designed with highly reliable components and provides for a high availability. The system is completely redundant except for the final motor control logic for each fine motion control rod drive (FMCRD). All normal rod movement commands are subject to an agreement between the two independent RCIS channels. Disagreement between the two channels results in rod withdrawal inhibit.

(2) The rod block functions, which are important in limiting the consequences of a rod withdrawal error during normal plant operation, consist of RCIS redundant automated thermal limit monitor (ATLM) subsystem and the rod block function of the redundant multi-channel rod block monitor (MRBM) subsystem of the neutron monitoring system (NMS). These subsystems are responsible for monitoring and entering fuel operating and safety thermal limits by initiating rod blocks whenever such thermal limits are approached during normal plant operations.

The MRBM uses local power range monitor (LPRM) signals to monitor for any abnormal operating transient that might result in local fuel damage. In the manual mode of operation, the MRBM function prevents fuel assembly safety thermal limit violation if both channels of the ATLM subsystem are inoperative. This is similar to the RBM function of BWR/5 plants. The ATLM subsystem receives LPRM, APRM and core flow signals directly from the NMS, and performs thermal limit calculations on the inputs independently to enforce rod blocks. Multiple failures are required before the ATLM function is disabled.

(3) The ATLM subsystem is designed so that no credible single failure or single operator error shall prevent its intended function. The ATLM function is to prevent a rod withdrawal error (RWE) from occurring. As such, there is no basis for occurrence of the RWE in the power range.

(4) The RCIS acts on signals received from either the ATLM or the MRBM to issue rod blocks. The signals that are generated to allow rod withdrawal are serialized data transmission too complex for credible failures to duplicate; particularly on two independent and separate data transmission channels.

(5) Non-safety power generation components of both the RCIS and the NMS are completely independent of the scram function. Other components, associated with monitoring power and initiating a reactor scram, are qualified in accordance with safety criteria.

(6) There is complete independence of the RCIS FMCRD motors from the FMCRD hydraulic scram function. No failure of an individual motor control logic affects or impairs the reactor scram. The RCIS and the active run-in function of the FMCRD are power generation components and are not required for safety.

(7) The control rod drive (CRD) system components that are required for the safe and orderly shutdown of the plant and/or whose failure can result in gross fuel damage are qualified as safety related. The components that are required for positioning the control rods to control power generation meet the design requirements of a power generation system. Those mechanical FMCRD components and other CRD system mechanical and electrical components that must function to accomplish the reactor scram function are qualified in accordance with safety criteria (e.g. Class 1E criteria for CRD electrical components).

(8) The CRD control rod brake is designed to “fail safe” in that if the RCIS fails to send any signals to the CRD system, the control rod brake is engaged and no further rod movement can occur. Also, loss of power maintains brake engagement. The engagement of the brake aborts rod withdrawal, but has no affect on the hydraulic scram function.

The failure modes and effects analyses shown in Tables 20.3.4-1 and 20.3.4-2 demonstrate the high reliability inherent in the RCIS functions for both the automatic and manual modes.

Question 440.31

Selected control rod run in (SCRRI) is provided for thermal-hydraulic stability control. Describe in detail how SCRRI controls stability.

Response 440.31

The SCRRI function is automatically initiated to control stability, based on power level and core flow level, when a trip of two or more RIPs occurs. The SCRRI function is bypassed when the power is below a specified setpoint. The bypass power level setpoint (percent of rated thermal power), has an analytical limit setpoint and a nominal limit setpoint established. Also, the bypass core flow setpoint (percent of rated flow), has an analytical limit and a nominal limit setpoint established.

When a trip of two or more RIPs occurs, (concurrent with core flow less than or equal to 36% AND power level greater than or equal to 30%), automatic initiation of the SCRRI takes place. This is to assure the power level is below 80% rod line at natural circulation, and to assure the flow rate is higher than that of eight RIPs operating with the minimum pump speed.

Based on previous operations, the operator initially calculates the rod worth and associated preselected control rods necessary to maintain stability in the event of multiple RIP trips. The preselections are stored in the SCRRI function memory in the RCIS circuitry.

If the described conditions occur which initiate SCRRI, the preselections are recovered from memory and utilized to maintain stability, bringing the reactor power down from the 100% rod line to the rod block setpoint.

Question 440.32

We understand that the control rod has no velocity limiter. Discuss in detail the reason for velocity limiter elimination.

Response 440.32

The locking piston control rod drive mechanism used in current BWRs cannot detect separation of the control rod from the drive mechanism during normal rod movements. In order to prevent damage to the nuclear system process barrier by the rapid reactivity increase which would result from a free fall of a control rod (rod drop accident) from its fully inserted position to the position where the drive mechanism is withdrawn, a velocity limiter is provided on the control rod to restrict the control rod free-fall velocity to acceptable limits.

In contrast to the locking piston control rod drive, the fine motion control rod drive (FMCRD) is designed to detect separation of the control rod from the drive mechanism. Two redundant and separate Class 1E switches are provided to detect the separation of either the control rod from the hollow piston or the hollow piston from the ball nut (refer to Subsection 4.6.1.2.2.6

for a discussion of the principle of operation of the separation detection switches). Actuation of either of these switches will cause an immediate rod block and initiate an alarm in the control room, thereby preventing a rod drop accident from occurring.

As discussed in Subsection 15.4.9, for a rod drop accident to occur with the FMCRD design, it is necessary for multiple, highly unlikely independent failures to occur simultaneously with the occurrence of a struck rod on the same FMCRD. This is displayed in Figure 20.3.4-4, which shows the various failure paths leading to a control rod drop on the FMCRD. As a consequence of the low probability of the simultaneous occurrence of these multiple independent events in each failure path, there is no basis to postulate a rod drop accident for the FMCRD design.

By designing the FMCRD to prevent a rod drop accident, the need for the velocity limiter is eliminated. It is on this basis that the ABWR control rod design does not include a velocity limiter.

Question 440.33

In SSAR Section 7.7.1.3, Section 7, 3 trips are described in the RPT logic. Do these 3 trips include the ATWS RPT trip or is the ATWS RPT trip separate?

Response 440.33

The 3 trips described in Subsection 7.7.1.3 have already included the ATWS RPT function. They are described as the “high dome pressure” RPT.

Question 440.34

In SSAR Chapter 5.4.1.4, it is stated “During various moderately frequent transient, various Reactor Internal Pump (RIP) operating modes will be required such as: Bank of five RIPs runback to 30% speed; trip from current speed conditions; or runback to 30% speed and subsequent trip. These control actions are all produced through control actions of the Recirculation Flow Control System (RFCS).”

Even though credit is taken for RFCS to mitigate transients as above, RFCS is not classified as a safety grade system. (See SSAR Chapter 7.7.1.3, Section 2). The staff has the same concern as given in Question No. 440.30.

Response 440.34

All control actions produced through the recirculation flow control (RFC) system, except the one to be discussed below, have no significant effects on thermal margin or pressure margin during transients.

The one control action which has some effect on the transient severity is the tripping of four reactor internal pumps (RIPs) following a fast closure of turbine control/stop valves. Although the recirculation pump trip is not classified as a safety-related function, its design is based on triplicated hardware and is highly reliable. No single failure can cause the trip function to fail completely. The worst single failure in this design can only cause one of the four RIPs not to

trip on demand. Our analysis results showed that the effect of this single failure on load rejection/turbine trip transients is an increase of delta CPR of about 0.01. Since the load rejection/turbine trip transients are not the most limiting transient, the CPR criterion would still be met. In fact, the SRP does not require the cases with additional single failure to meet the CPR criterion. Therefore, the ABWR RPT design is acceptable.

Question 440.35

In SSAR Chapter 5.4.1.5, it is stated "The recirculation system has sufficient flow coastdown characteristics to maintain fuel thermal margins during an abnormal operation transient." What are the coastdown characteristics? Explain in detail why they are sufficient.

Response 440.35

Although the reactor internal pump (RIP) inertia is significantly less than the pump inertia for operating BWRs (i.e. about 0.7 seconds inertia time constant for ABWR vs. about 3–5 seconds for operating BWRs), the power supplies to RIPs are so designed that no single failure could cause more than 3-RIPs to trip at the same time as described in Subsection 15.3.1. The evaluation of a trip of 3-RIPs as shown in Subsection 15.3.1 concludes that sufficient thermal margin is maintained during this event.

Question 440.36

RCIC is taken credit in the LOCA analysis. What "upgrade" has been made to the ABWR RCIC system which is different from the BWR/6 RCIC system?

Response 440.36

Because of its status as an engineered safety feature (ESF) in BWR/6 no significant upgrade was required in order to include RCIC as part of the ECCS network for ABWR. As described in Subsection 5.4.6.2.5.2 the initiation logic was diversified by adding a high drywell pressure input and the already good historical system reliability was improved by including a bypass start feature to provide for a smoother turbine start transient and significantly reduce the possibility of an overspeed trip. Also, the capability for full flow testing utilizing the safety related suction source (i.e., suppression pool), without having to inject to the vessel, has been included.

Additionally, in support of its inclusion as part of the ECCS, the RCIC system design meets the requisite criteria for such considerations as divisional separation and seismic, essential, and environmental qualification. Such features as its diverse power source (i.e. steam driven, DC powered/controlled) and its Level 2 auto-restart logic (i.e., auto-reset of Level 8 trip) further justify RCIC's ECCS status.

Question 440.37

Traditionally, RCIC can be started with only reactor steam and DC power and it is independent of AC power for start up. Is this true for the ABWR RCIC?

Response 440.37
Yes, the RCIC can be started with only steam and DC power. The steam supply valves powered from AC source are normally open and therefore loss of AC power will not prevent RCIC operation.

Question 440.38
In SSAR Chapter 5.4.6.1, Section 5, it is stated that "should a complete loss of AC power occur, RCIC is designed to operate for at least 30 minutes." Typically, in current operating BWRs, the batteries (DC power) are available for at least 4 hours after station blackout. If the batteries are available for at least 4 hours, why is RCIC designed to operate for only 30 minutes?

Response 440.38
The ABWR plant is being designed to be capable of maintaining core cooling and containment integrity for at least 8 hours following the loss of offsite and onsite ac electrical power. This capability assessment follows the general criteria of:

(1) Assuming no additional single failures

(2) Realistic analytical methods and procedures

The design basis of 30 minutes considers design (vs. realistic) analytical methods and procedures with the final plant design established using both criteria.

Question 440.39
Some of the recent BWRs licensed to operate have gland seal compressor instead of the gland seal condenser. Why the switch now to gland seal condenser? Is the ABWR gland seal condenser design the same as the old design? Describe in detail the operation of condensate and vacuum pumps.

Response 440.39
Barometric condenser applied for ABWR is the same design applied to older operating plants. The barometric condenser works on negative pressure (vacuum) principle. The vacuum pump maintains a negative pressure in the condenser such that the leakage is being sucked and collected in the vacuum tank in the form of condensate. The condensate is then pumped out and being returned to the RCIC pump suction line.

The gland seal compressor type applied to most BWR/6 design works in the principle of positive pressure. The compressor pressurizes the seal such that the leakage flows inward as opposed to the barometric condenser.

Barometric condenser is no longer applied in later U.S. plants since no more U.S. vendor manufactures this equipment for nuclear application. On the other hand, barometric condenser is still being manufactured in Japan.

Question 440.40

In SSAR Chapter 5.4.6.2.1.3, Section 2, it is stated "the F031 limit switch activates when fully open and closes F022 and F059." This interlock is not applicable when the system is in the test mode. During test mode the RCIC pump takes suction from the suppression pool and returns to the pool. Therefore, all the 3 valves will be open simultaneously. Correct the interlock description for F031, F022 and F059.

Response 440.40

The response to this question is provided in the revised Subsection 5.4.6.2.1.3(2). Figure 5.4-8 has revised valve designations from F031, F022 and F059 to F006, F008 and F009, respectively.

Question 440.41

In the ABWR design, RCIC is tested by taking suction from the pool and returning to the pool. This new testing, unlike current plants where RCIC is tested from the condensate storage tank (CST), is a requirement to take credit as an ECCS system. But from an operational point of view, it is better to provide the test flow path from CST and to CST also. Normally, suppression pool water is a low quality water and hence, draining, flushing and filling of the system is required before putting the system back on standby after testing. (Normally, the system is lined up from CST). This may add unnecessary radiation exposure to operations personnel. We suggest that you consider adding a test return line to CST also. Since a suction line form CST is already provided, addition of new test return line to CST at the pump discharge should not be major change.

Response 440.41

At an earlier state in the design, retention of the CST test return line was considered. However, this idea was rejected due to the increase in cost and complexity versus the questionable benefit. Since a test return line to the suppression pool could be combined with the existing RCIC pump minimum flow line, the addition of full flow test return to the CST would involve considerable cost. System logic would be complicated by the required additions ensuring this line was isolated and flow rerouted to the vessel should system initiation be required during CST to CST testing. There would also be additional interlocks needed to prevent pumping suppression pool water to the CST. Complexity and cost would also increase from the required maintenance of the additional hardware, instrumentation and logic.

Suppression pool water quality will be maintained by the suppression pool cleanup system which is designed to be operated continuously. Although this quality may be somewhat less than that of the CST, it will be consistent with infrequent filling of RCIC piping during testing and possible injection to the RPV and therefore the reference draining, flushing and filling of the system is not necessarily required. Additionally, and decrease in personnel exposure realized by performing CST to CST testing (assuming draining, flushing and filling were required) might be fully or partially offset by an increase from the additional maintenance considerations.

Question 440.42
Why are the power supply for valves F063, F064, F076, and F078 standby AC instead of DC?

Response 440.42
For the ABWR RCIC, only the steam supply inboard isolation valves F035 and F048 are powered from AC source. F036 and all other MOVs are DC powered. Figure 5.4-8 has been updated and indicates the correct power supply; also, valves F063, F064 and F076 have been re-designated F035, F036 and F048, respectively.

Valves F077 and F078 have recently been removed from the ABWR RCIC design. The line where these valves were located performed a vacuum breaking function of the turbine exhaust line and had a separate containment penetration. The current ABWR RCIC configuration eliminated F077 and F078 since the vacuum breaking function is now inside containment and has no separate penetration that mandates provision for F077 and F078.

The use of AC power source for F035 and F048 is considered technically acceptable for the following reasons:

(1) DC motors require considerably more maintenance than AC motors. Since they cannot be maintained during plant operation if they are located inside the drywell, DC MOVs would be far less reliable than AC.

(2) During loss of AC power RCIC system will remain operable since these valves are normally open.

Question 440.43
Address the following TMI-2 action Items related to RCIC

(1) II.K.1.22

(2) II.K.3.13

(3) II.K.3.15

(4) I.K.3.22

(5) II.K.3.24

Response 440.43
Response to this question is provided in Appendix 1A.

Question 440.44
Confirm that the RCIC system meets the guidelines of Regulatory Guide 1.1 regarding pump Net Positive Suction Head (NPSH).

Response 440.44

The key requirement of Regulatory Guide 1.1 is that no credit be taken for containment pressurization when establishing the NPSH conditions for ECCS pumps. The RCIC meets this requirement. New Table 5.4-1a provides the numerical evaluation of RCIC NPSH conditions assuming no containment pressurization and 77°C suppression pool water temperature In summary, the RCIC pump will have over 0.85 meter NPSH margin at the most limiting condition.

Note that NPSH calculation is based on suppression pool temperature of 77°C. This is the maximum temperature RCIC is expected to operate.

The following summarizes the transient/accident events which can result in increasing suppression pool water temperature. It summarizes the basis for concluding that RCIC NPSH conditions (0.101 MPaA containment pressure, 77°C suppression pool water) are acceptable.

Event	RCIC NPSH Assessment*
Reactor Isolation Event	Maximum pool temperature well below 77°C (approx. 49°C)
Large Break LOCA	Rapid vessel depressurization. RCIC not required.
Intermediate Size LOCA	Rapid vessel depressurization. Reactor pressure less than 1.03 MPaG before pool temperature reaches 77°C.
Small Break LOCA	RCIC operation not required when pool temperature reaches 77°C.
Station Black Out Event (8 hours capability)	RCIC suction is taken from the condensate storage tank (CST) with a capacity of 8 hour operation. Suppression pool (S/P) water is not expected to be used during this event. However, if the automatic transfer of suction from the CST to S/P were to occur due to high S/P water level, a manually controlled override switch is operated to continue taking suction from the condensate storage tank.

* RCIC design basis requires 100% system flow only for reactor pressure >0.049 MPaG.

Question 440.45

SRP 5.4.6 identifies GDCs 5, 29, 33, 34 and 54 in the acceptance criteria. Confirm that the RCIC system, described in Chapter 5.4.6 of the SSAR, meets the requirements of the above GDCs.

Response 440.45
Evaluations of the reactor core isolation system against the applicable General Design Criteria (GDC) are provided in Subsection 3.1.2 (statement to this effect has been added to Subsection 5.4.6). Based on the evaluations in Subsection 3.1.2 it is concluded that the RCIC system meets the requirements of the applicable GDCs.

Question 440.46
In SSAR Chapter 5.4.6.3, it is stated "The analytical methods and assumptions in evaluating the RCIC system are presented in Chapter 15 and Appendix 15A." Identify the section in Chapter 15 where the analytical methods and assumptions evaluation the RCIC systems are given.

Response 440.46
This is given in Subsection 15.6.5.3 which, in turn, makes reference to Section 6.3.

Question 440.47
Normally the RCIC pump takes suction from the condensate storage tank (CST). But the CST is not seismically qualified or safety related. Confirm that the system piping and level transmitters, which interface with CST, will be designed and installed such that the automatic switchover to the suppression pool takes place without failure.

Response 440.47
Four redundant Class 1E level transmitters are seismicall installed in the condensate storage tank (CST). One level sensor in each electrical Division (Div. 1, Div. 2, Div. 3 and Div. 4) provides input signal and is processed in 2-out-of-4 logic configuration. If the amount of water in the CST decreases below the setpoints of the level sensors, on the CST failed seismically, a signal will be sent to perform the automatic switchover to the suppression pool. The system piping from the suppression pool to the RCIC pump is seismically qualified.

Question 440.48
The equipment and component description given in 5.4.6.2.2 is very brief. What type of turbine is used in the ABWR? Is it the same type as the Terry Turbines used in current BWRs? Is the turbine testing done by Terry Co. with water applicable to the ABWR? Describe in detail the components, especially the turbine and the pump.

Response 440.48
The ABWR RCIC equipment specification does not specify the type of turbine, rather, its performance requirements. Performance testing will be performed with water applicable to the ABWR Standard Plant design. The equipment and component description given in Subsection 5.4.6.2.2 is commensurate with a standard design. The depth of information provided in this subsection is the same as that provided for GE's standard BWR/6 Nuclear Island design. This information is reflected in the RCIC equipment specification. The amount of information provided is sufficient to delineate the performance requirements of the RCIC without restricting its supply by qualified equipment vendors.

Question 440.49

To the best of our knowledge, the steam isolation valves F063 and F064 in currently operating BWRs are not tested with a steam pipe break downstream and with actual operating conditions (pressure 1000 psig and temperature 546 degrees F). There is no guarantee that the steam isolation valves will close during a break. We require that a proper testing of the valves be performed before the final design approval. (Reference Generic Issue GI-87 "Failure of HPCI Steam Line Without Isolation.")

Response 440.49

The ABWR RCIC equipment specification requires that the valves in question close within a specified time under actual operating conditions. Since this is a standardized design it is not possible to indentify a specific equipment vendor and test the valve before the final design approval. However, GE will closely follow the current valve testing in support of GI-87 and, if necessary, will make appropriate modifications to the equipment specification prior of issuance of the final SER. Figure 5.4-8 has revised designation of valves F063 and F064 to F035 and F036 respectively.

Question 440.50

Steam isolation valves F063 and F064 are to be opened in sequence to reduce water hammer and for slow warm-up of the piping. F064 and F076 are opened first. The valves logic should prevent the operator from opening the valves out of sequence. Confirm that the valves control logic includes an interlock.

Response 440.50

The inboard (F035) and outboard (F036) isolation valves are provided with keylock switches as protective features in addition to several administrative constraints. Administratively, the valve control switch key must be obtained, then (1) the key must be inserted into the lock to enable the maintained contact switch and (2) the switch must be turned from OPEN to CLOSE to enable reset of the sealed-in isolation signal from the leak detection system. (An interlock for the isolation valve to be in CLOSE position before the leak detection system isolation signal can be reset is in compliance with NUREG-0737. NUREG-0737 Item II.E.4.2 Position 4 requires that isolation valves must not open automatically upon reset of the isolation signal and must only be opened by a deliberate operator action).

Upon reset of the leak detection system, the outboard isolation valve (F036) is allowed to open by placing the control switch in the OPEN or STOP (intermediate position for throttling) position to drain trapped condensate between the inboard and the outboard isolation valves. Then the inboard bypass valve (F048) is opened to drain trapped condensate upstream of the inboard isolation valve (F035) at the same time slowly equalizing the pressure across inboard valve (F035) and warming-up the downstream piping. Finally, the inboard isolation valve (F035) is opened by placing the control switch key in the OPEN position to allow full pressurization of the steam line. This opening sequence procedure is delineated in the RCIC

system design specification and RCIC system operating procedure. (Figure 5.4-8 has revised designations of valves F063, F064 and F076 to F035, F036 and F048, respectively.)

GE considers that an interlock between the inboard and outboard valves is not necessary. The addition of an interlock will only complicate the logic without an offsetting benefit. Even if an interlock is provided, the potential for water hammer is still likely to exist if the operator failed to drain, equalize and warm-up the line before opening the inboard valve.

Another complication to an interlock is that the outboard valve (F036) is a throttling type. Once the inboard valve is opened, the interlock prevents inching of the outboard valve (F036).

It is GE's position that strict administrative and procedural control is adequate. The same administrative and procedural control is being practiced on all GE BWRs and to date no such problem has been reported.

Question 440.51

Describe how the system design reduces water hammer. Confirm that a condensing sparger will be provided at the turbine exhaust to reduce water hammer. Add a necessary not in the P&ID to indicate that the steam supply and exhaust lines are to be sloped to reduce water hammer.

Response 440.51

The RCIC steam supply piping is sloped downwards with drain pots and steam traps upstream and downstream of the turbine. During normal reactor operation steam condensate are continuously drained and the steam traps automatically isolated when RCIC is initiated. Also, in the turbine exhaust line a condensing sparger is provided to reduce water hammer, minimize line vibrations and reduce noise levels.

In addition, the turbine exhaust line is installed above the maximum water level of the suppression pool. It is also provided with vacuum breakers to relieve the exhaust line from pressure instability that can cause water hammer.

Addition of notes in the P&ID is not required since these requirements are part of the ABWR RCIC design specification as given below:

"System piping shall be arranged to provide a continuous downward slope as follows:

(1) Steam supply line—from the main steam line to the drain pot, just ahead of the turbine. RCIC steam inboard isolation valves "Bypass, Drain and Warm-up Line" shall be sloped parallel with section of line and valve it is bypassing to prevent a dead leg from occurring.

(2) Turbine exhaust line—from the upstream side of the check valve to the turbine exhaust drain pot and downstream of the check valve to the wetwell.

(3) Vacuum pump discharge line—from the upstream side of the check valve to the vacuum pump and downstream of the check valve to the suppression pool.

(4) The gland seal equipment shall be located such that there are no water pockets between this equipment and the turbine. Piping between the turbine and the gland seal equipment shall be kept to a minimum."

Question 440.52

The RCIC operation from the suppression pool may be limited by an increase in suppression pool water due to lube oil cooling done by suppression pool water. What is the maximum suppression pool temperature at which RCIC can be operated safely.

Response 440.52

RCIC can be safely operated at a range of 10°C to 60°C for continuous operation. However, it can be operated for short term at higher temperatures not to exceed 77°C. Long term operation above this limit will degrade lube oil viscosity and possibly damage the turbine. However, for all design basis accidents, RCIC operation above 77°C is not required. Consequently, the RCIC lube oil cooling system is considered fully adequate.

Question 440.53

How is thermal shock prevented at the feedwater line injection point.

Response 440.53

The effects of thermal shock at the feedwater line injection point is accounted for by the following manner:

(1) The thermal cycle conditions at the RCIC-to-FW injection point have been identified as shown on the Feedwater piping cycles diagram.

(2) Thermal stress and fatigue analysis is done using the thermal cycle conditions of Item 1 to show that the fatigue usage is <1.0.

(3) If fatigue usage exceeds 1.0, then special design and construction features, such as thermal sleeves, will be provided to reduce the fatigue usage to <1.0.

(4) The thermal cycle diagram of Item 1 also identifies thermal temperature stractifications between the top and bottom of the horizontal runs of feedwater piping. The stress effects of the pipe restraints in limiting the top-to-bottom thermal expansion are included in the thermal stress and fatigue analysis of Item 2.

Question 440.54

What is the minimum quantity of water required in the condensate storage tank (CST) for RCIC operation? Give the basis for the required quantity of water in the CST.

Response 440.54

Table 9.2-3 states that 570 m^3 of water is stored for use during station blackout. This volume is that required for eight hours operation of the RCIC. However, it is not a dedicated volume and the RCIC can use water from the suppression pool.

Question 440.55

In the LOCA analysis (SSAR Table 6.3) 800 gpm is taken credit for the RCIC system. Due to pump degradation and flow controller measurement inaccuracies, the system may not deliver 800 gpm. The required system flow should be increased, accounting for uncertainties, to meet the LOCA analysis required flow.

Response 440.55

The flow controller will compensate for pump degradation. However, the flow controller measurement inaccuracy is specified as% 2.5% and this decrease of 4.5 m^3/h in flow delivery should have been used in the LOCA analysis. To bound the impact of this flow controller measurement inaccuracy, the limiting LOCA case was reanalyzed assuming an RCIC flow rate of 177.5 m^3/h.

The limiting LOCA case from the ECCS performance analyses in Subsection 6.3.3 (in terms of minimum water level) is the HPCF injection line break. This case assumes the single failure of the emergency diesel generator which provides electrical power to the intact HPCF system. The ECC systems remaining are the RCIC, 2 RHR/LPFL and 8 ADS valves. For this case, since there is a minimum number of ECCS available, the RCIC flowrate is more significant. The transient minimum water levels within the reactor are compared for RCIC flow rates of 182 and 177.5 m^3/h are compared below:

HPFL Injection Line Break
(RCIC + 2RHR/LPFL + 8 ADS)

Minimum Water Level (m)

RCIC Flowrate (m^3/h)	Hot Bundle	Bypass	Upper Plenum	Outside Shroud
182	9.39	8.3	9.5	6.4
177.5	9.36	8.3	9.5	6.4

This limiting analysis demonstrates that this small difference in the RCIC flowrate has an insignificant affect on the LOCA analysis results, and the ECCS performance analyses assuming a RCIC system delivery of 182 m^3/h is sufficiently accurate.

Question 440.56
In SSAR Chapter 5.4.6.2.1.3, Section 1, it is stated "there are two key-locked valves (F068 and F069) and two key-locked isolation resets." Change the description to state that the valves F068 and F069 are key-locked "open."

Response 440.56
Subsection 5.4.6.2.1.3 (1) has been revised accordingly. Figure 5.4-8 has revised designation of valves F068 and F069 to F039 and F047 respectively.

Question 440.57
What is the closing time of test return valves F022 and F059? They should close earlier than 15 seconds to prevent any flow diversion to the suppression pool during a LOCA.

Response 440.57
The test return line valves are standard speed closing valves (5 mm per second). This will result in closing times of 20 seconds since the valves are 100 mm. Fast closing valves are not necessary due to the following reasons and therefore existing design is considered adequate:

(1) The probability of LOCA occurring while in test is very small.

(2) Test return valves will close on high drywell pressure before water level reaches Level 2. By the time water level have dropped to Level 2, the test return valves would have closed. And if they are not, only 5 seconds of flow diversion to the suppression pool will take place which is practically insignificant.

(3) Slow closing valves are far more reliable than fast closing valves.

Figure 5.4-8 has revised designation of valves F022 and F059 to F008 and F009 respectively.

Question 440.58
Since RCIC is part of the ECCS network, the RCIC pump minimum flow line should be designed to operate for a reasonable length of time. How long can RCIC run in minimum flow mode?

Response 440.58
The piping and valves of the RCIC pump minimum flow line are specified such that they have capabilities consistent with the full range of pressures and flows that this line can be anticipated to encounter. It is more likely that minimum flow duration will be restricted by the pump itself and will depend on the specific make and model of the installed equipment which is beyond the scope of this document. Previous RCIC pump suppliers have recommended that extended operation at low flows be avoided. However, there is no known reason for requiring the RCIC system to run at minimum flow for any period longer than what it takes to establish full flow in either the vessel injection line or the test return line.

With other motor driven ECCS pumps it is sometimes desirable to be able to operate for extended periods at low flows, with the discharge valve closed, so that cycling of the pump motor on and off can be avoided when multiple restarts of a hot motor is potentially damaging and not recommended. The RCIC system, with it steam driven pump, does not share this concern and therefore, the capability for extended low flow operation is not as advantageous. Additionally, a full flow test return line is supplied, with a throttleable valve, to support RCIC system operation with the vessel injection valve closed.

Question 440.59

What is the difference between Low Pressure Flooder System and Low Pressure Core Spray System? Describe in detail why "flooder" system is better than core spray. Submit detailed drawing showing the "flooder" inside the vessel.

Response 440.59

The basic difference between a flooder system and core spray system is the design and location of the sparger used to distribute the water within the reactor pressure vessel.

A core spray system has a distribution sparger used to distribute the water within the reactor pressure vessel.

A flooder system has a distribution sparger which is designed to promote mixing of the flow with the vessel inventory. The sparger can be located inside or outside the shroud. If the sparger is located inside the shroud, good mixing will minimize the fatigue usage on the reactor internal structures. If the sparger is located outside the shroud, good mixing will minimize the possibility of brittle fracture of the reactor pressure vessel.

For the ABWR there is no core uncovery for any LOCA. Therefore the simpler flooder sparger design was adopted for all emergency core cooling systems. This includes both full-pressure range (high pressure) and low-pressure only (low pressure) systems. Compared to the core spray design, the flooder design reduces possible personnel exposure. This is due to the peripheral location of the flooder design which minimizes the need for work over the fuel. Also, the simpler flooder sparger requires less time for inspection and maintenance. The LOCA analyses presented in Subsection 6.3.3 demonstrates that all licensing requirements in 10CFR50.46 are met with this ECCS configuration.

The distribution sparger drawings for both the low pressure and the high pressure core flooders are shown in Figures 20.3.4-5a, 20.3.4-5b and 20.3.4-5c.

Question 440.60

In SSAR Table 1.3.2, it is stated that the RHR heat exchanger duty for suppression pool cooling is based on assuming they are placed in operation 20 hours after reactor shutdown.

This statement is not consistent with the normal assumption that suppression pool cooling is stated within ten minutes after a LOCA. What is the basis for sizing the RHR Hx? In SSAR

Chapter 5.4.7.3.2, it is stated that ATWS was considered for RHR heat exchanger sizing. But a Feedwater Line Break (FWLB) is the most limiting event. Describe in detail why FWLB is the limiting event and not ATWS.

Response 440.60

The note at the bottom of page 1.3-13 of Table 1.3-2 is incorrect. It has been corrected to read: "...Heat exchanger duty at 20 hours following reactor shutdown."

The basis for sizing the RHR heat exchanger is to limit the long term pool temperature to a maximum of 97°C for the most limiting events. Analyses show that the feedwater line break (FWLB) is the most limiting event with the assumption of a 10 minute operator action time to start pool cooling. The ATWS event is less limiting than the FWLB because the ATWS high-pressure signal causes the electrical insertion of the fine-motion control rod drives which leads to a hot shutdown condition within less than 3 minutes. With 10 minute operator action time to initiate pool cooling, the maximum pool temperature is much less than 93°C.

Question 440.61

In SSAR Chapter 5.4.7.3.2, Section 2, it is stated "because it takes 4 to 6 hours to reach the peak pool temperature, shutdown cooling will be initiated before peak pool temperature. The energy release from the reactor will be controlled by the shutdown cooling system, and there is no need to release the reactor energy to the pool."

Which scenarios are postulated for the assumption stated above? For most scenarios, suppression pool cooling is started within a short time. Shutdown cooling is started at a much later stage. Describe in detail the assumptions made for sizing the RHR heat exchangers.

Response 440.61

The assumption stated in Subsection 5.4.7.3.2(2) is not used in any of the analyses for determining the required heat exchanger capacity. It is a statement which points out one of the conservatisms of the analyses by not accounting for this effect. As stated in the response to Question 440.60, the analyses use the assumption that suppression pool cooling is initiated 10 minutes after start of the event. Other assumptions utilized in the FWLB analyses (which is the limiting event for the heat exchanger sizing) are:

(1) Reactor power is 102% of rated

(2) One RHR heat exchanger failure

(3) ANS 5.1 decay heat

(4) 164% rated feedwater flow for 120 seconds

(5) MSIV closure 3.5 seconds following scram

(6) Reactor Water level at normal operating level

(7) Suppression pool water level at minimum level

(8) Initial suppression pool temperature at the maximum operating value of 35°C

(9) Maximum service water temperature at 35°C

(10) Maximum pool temperature limit of 97°C

Question 440.62
SRP 5.4.7 identifies GDCs 2, 5, 19 and 34 in the acceptance criteria. Confirm that the RHR system, described in Cahpter 5.4.7 of the SSAR, meets the requirements of the above GDCs.

Response 440.62
In addition to Subsection 5.4.7.1.4 which address GDC 5, eveluations of the residual heat removal (RHR) system against the applicable General Design Criteria (GDC) are provided in Subsection 3.1.2 (a statement to this effect has been added to Subsection 5.4.7). Based on the evaluations in Subsection 3.1.2 it is concluded that the RHR system meets the requirements of the applicable GDCs.

Question 440.63
Confirm that the RHR system satisfies the requirements of TMI-2 Action item III.D.1.1.

Response 440.63
Response to this question is provided in Appendix 1A.

Question 440.64
Confirm that the RHR system meets the guidelines of Regulatory Guide 1.1 regarding pump Net Positive Suction Head.

Response 440.64
As demonstrated by the response to Question 430.28, the RHR system meets the guidelines of Regulatory Guide 1.1 regarding pump Net Positive Suction Head.

Question 440.65
In Section 5.4.7.2.3.1 (3) it is stated that “redundant interlocks prevent opening the shutdown connections to and from the vessel whenever the pressure is above the shutdown range.”

RSB 5-1 requires that the suction and discharge valves interfacing with the RCS shall have independent “diverse” interlocks to prevent the valves from being opened unless the RCS pressure is below the RHR design pressure.

Confirm that the high/low pressure interface with RCS satisfies the requirements of RSB 5-1.

Response 440.65

The valves that interface with the RCS are the shutdown cooling valves on the suction side and the injection valves on the discharge side. RSB 5-1 has different requirements for the suction and discharge conditions. Diverse interlocks are mentioned for the suction side valves. The ABWR RHR design does not explicitly meet this requirement for diversity; it does meet the intent of the requirement to provide high reliability against inadvertent opening of the valves. The pressure signal that provides the interlock function is supplied from 2-out-of-4 logic, which has four independent pressure sensor and transmitter inputs. The independence is provided by each being in a separate instrument division. The 2-out-of-4 logic provides equal or better reliability than the existing licensed BWR plants. Furthermore, the inboard and outboard valves of a common shutdown cooling suction line are operated by different electrical divisions.

The discharge side requirements of RSB 5-1 allow a choice between four different configurations. ABWR utilizes the second selection, which is one or more check valves in series with a normally closed power-operated valve.

Questions/Responses 440.66 through 440.71

These question numbers not used.

Question 440.72

NRC Bulletin 88-04 dated May 5, 1988, discusses the potential safety related pump loss. The first concern involves the potential for the dead-heading of one or more pumps in safety related systems that have a miniflow line common to two or more pumps or other configurations that do no preclude pump-to-pump interaction during miniflow operation. A second concern is whether or not the installed miniflow capacity is adequate for even a single pump in operation.

In the ABWR design, HPCF pump miniflow lines and test return lines to the suppression pool are routed through the RHR “C” loop test and minimum flow lines. How does the ABWR design satisfy the concerns given in NRC Bulletin No. 88-04?

Response 440.72

The ABWR RHR and HPCF systems use a common minimum flow return line to the suppression pool, which is one of the topics addressed by NRC Bulletin No. 88-04. The ABWR design has a very low pressure drop associated with the pipe down stream of the junction where the RHR and HPCF begin to share the common pipe. Because of this, a pressure cannot be created in the down stream shared line that could result in either one of the pumps discharging into a pressure that could dead head a pump. When both RHR and HPCF pumps are running simultaneously at minimum flow the flow losses are approximately 6.86 kPa and the static head for the discharge pipe’s submergence in the suppression pool is approximately 49.03 kPa. Even for the case (which is unplanned) where both pumps are simultaneously operating at rated flow, the total pressure drop down stream of the junction is approximately 172.6 kPa. The RHR and HPCF approximate pressure heads at rated flow are 1.23 MPa and 1.86 MPa respectively, which are significantly above the common down stream pressure that could potentially dead head a pump.

The other concern related to NRCB 88-04 is the minimum flow percentage of rated flow. The ABWR values are 15.5% and 10% for RHR and HPCF respectively. BWR/6 plants have specified ECCS pumps at 10% minimum flow and operational problems have not been encountered.

Question 440.73

In RHR process diagrams 5.4-11b, RHR heat exchanger removal capacity for different modes is not given. Revise the process diagram to include the heat removal capacity.

Response 440.73

Figures 5.4-11b and 6.3-3b have been revised to show the RHR heat exchanger removal capacities for the different modes.

Question 440.74

In Figure 5.4-10b, (I-12) flammability system (T-49) is cross-tied to the RHR system. What is the purpose of this cross-tie to the RHR system?

Response 440.74

The cross-tie to the RHR System is an interface connection that obtains cooling water after a LOCA for the Flammability Control System's recombiners as needed by manual initiation.

Table 20.3.4-1 Automatic Rod Movement (Response to Question 440.30)

# Failures	Type	Results
0	No Failures	ARBM rod withdrawal block enforces OLMCPR.
1	One ARBM channel fails but self-test detects the failure.	Automatic rod movement prevented with other ARBM channel.
2	One ARBM channel fails and is not detected.	Other ARBM channel provides rod block to enforce OLMCPR.
3	One ARBM channel fails and is not detected. Other ARBM fails but is detected.	No automatic rod movement allowed.

Table 20.3.4-2 Manual Rod Movement (Response to Question 440.30)

# Failures	Type	Results
0	No Failures	ARBM rod withdrawal block enforces OLMCPR.
1	One ARBM channel fails but self-test detects the failure.	Manual rod movement prevented by self-test logic.
2	One ARBM channel fails and is not detected.	Other ARBM channel provides rod block to enforce OLMCPR.
3	One ARBM channel fails and is not detected. Other ARBM fails but is detected.	No automatic rod movement allowed.
4	Both ARBMs fail and neither is detected.	With operator supervision to enforce OLMCPR, dual channel MRBM provide backup prevention to enforce SLMCPR.
1	A failed ARBM channel is bypassed.	Other ARBM channel provides rod block to enforce OLMCPR.
2	A failed ARBM channel is bypassed and other channel fails but is detected.	Manual rod movement is prevented by the self-test logic.
3	A failed ARBM channel is bypassed and other channel fails and is not detected.	With operator supervision to enforce OLMCPR, dual channel MRBM provide backup prevention for not exceeding SLMCPR.

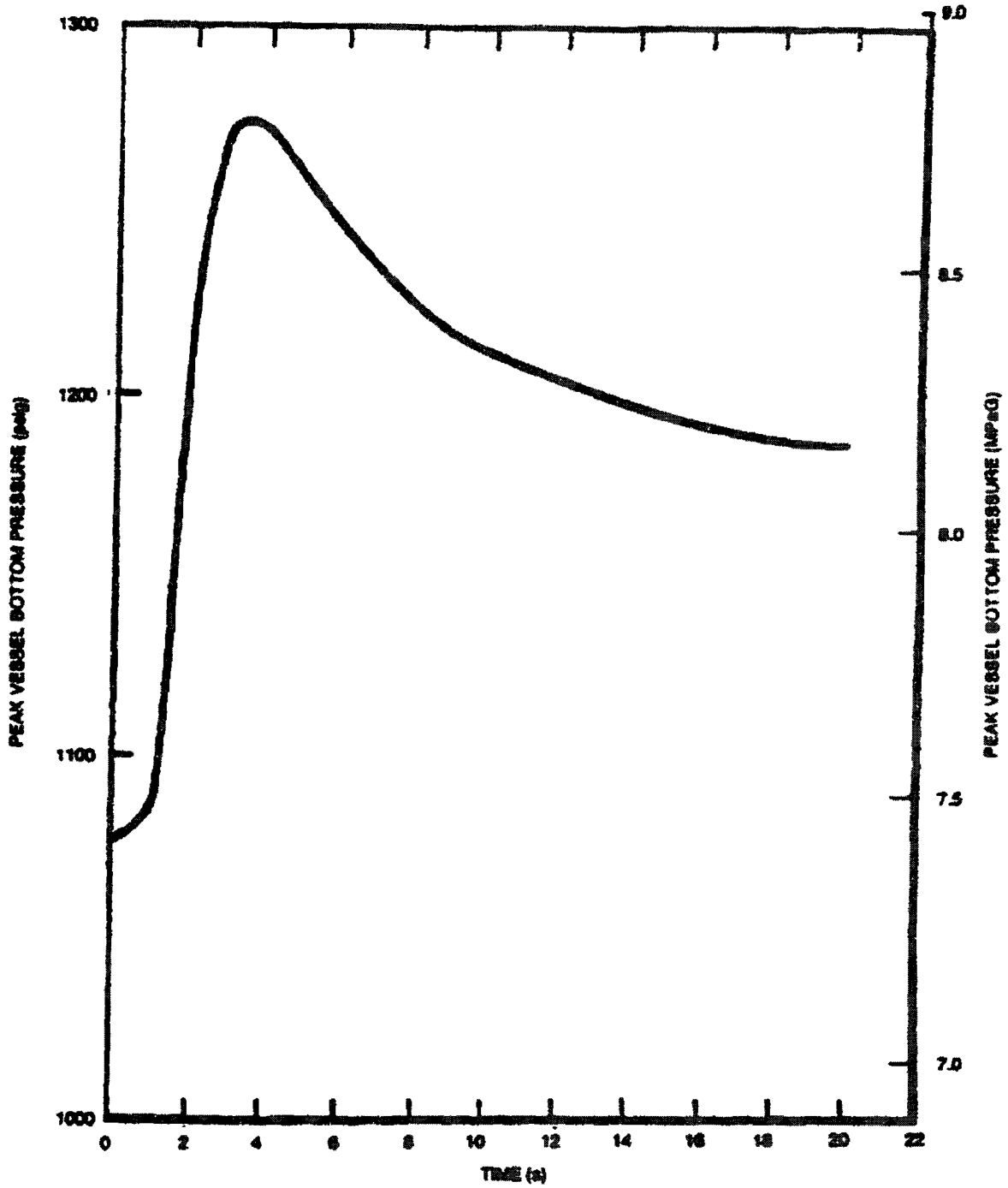

Figure 20.3.4-1 MSIV Closure with Flux Scram (Response to Question 440.14)

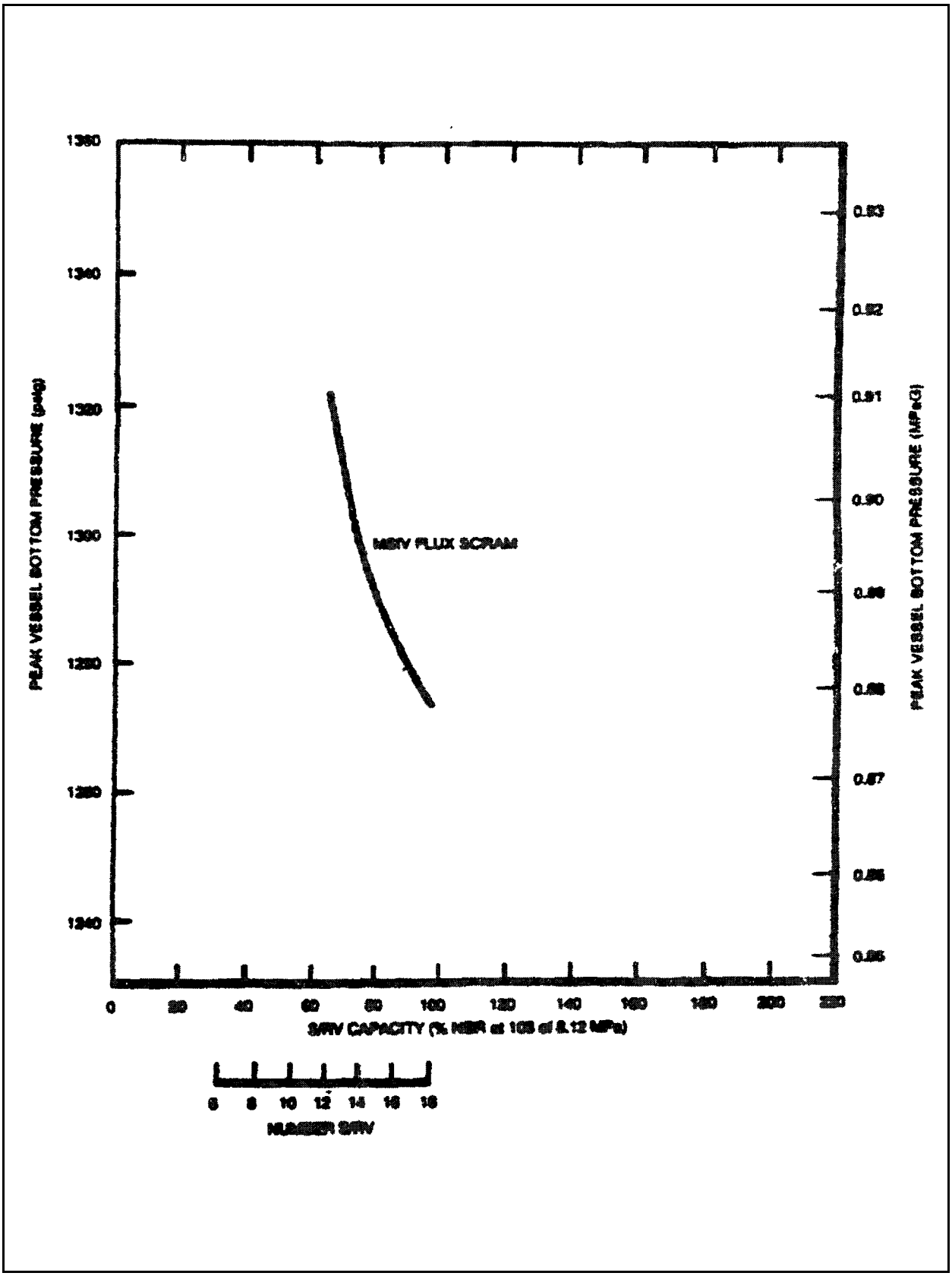

Figure 20.3.4-2 Peak Vessel Pressure Versus Safety/Relief Valve Capacity (Response to Question 440.14)

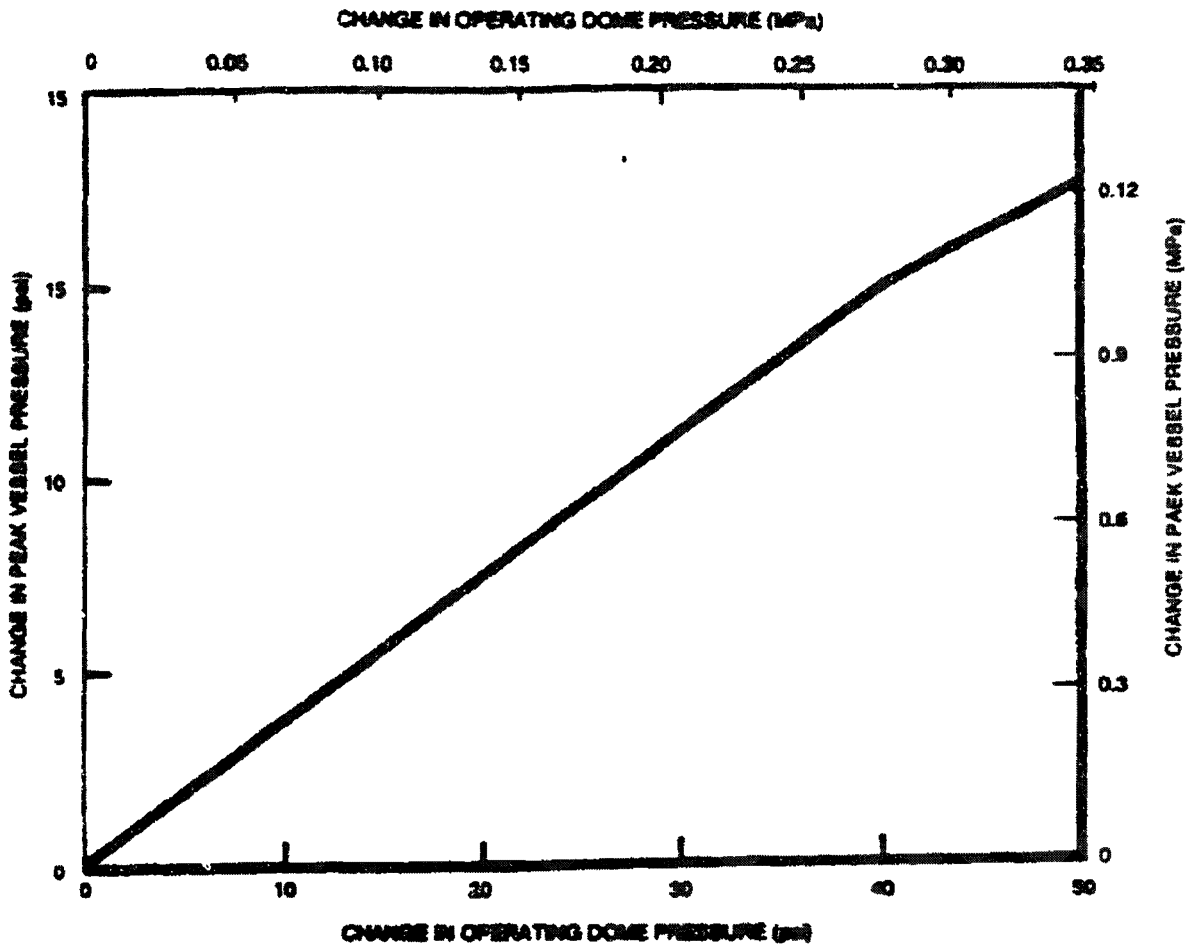

Figure 20.3.4-3 MSIV Closure-Flux Scram (Response to Question 440.16)

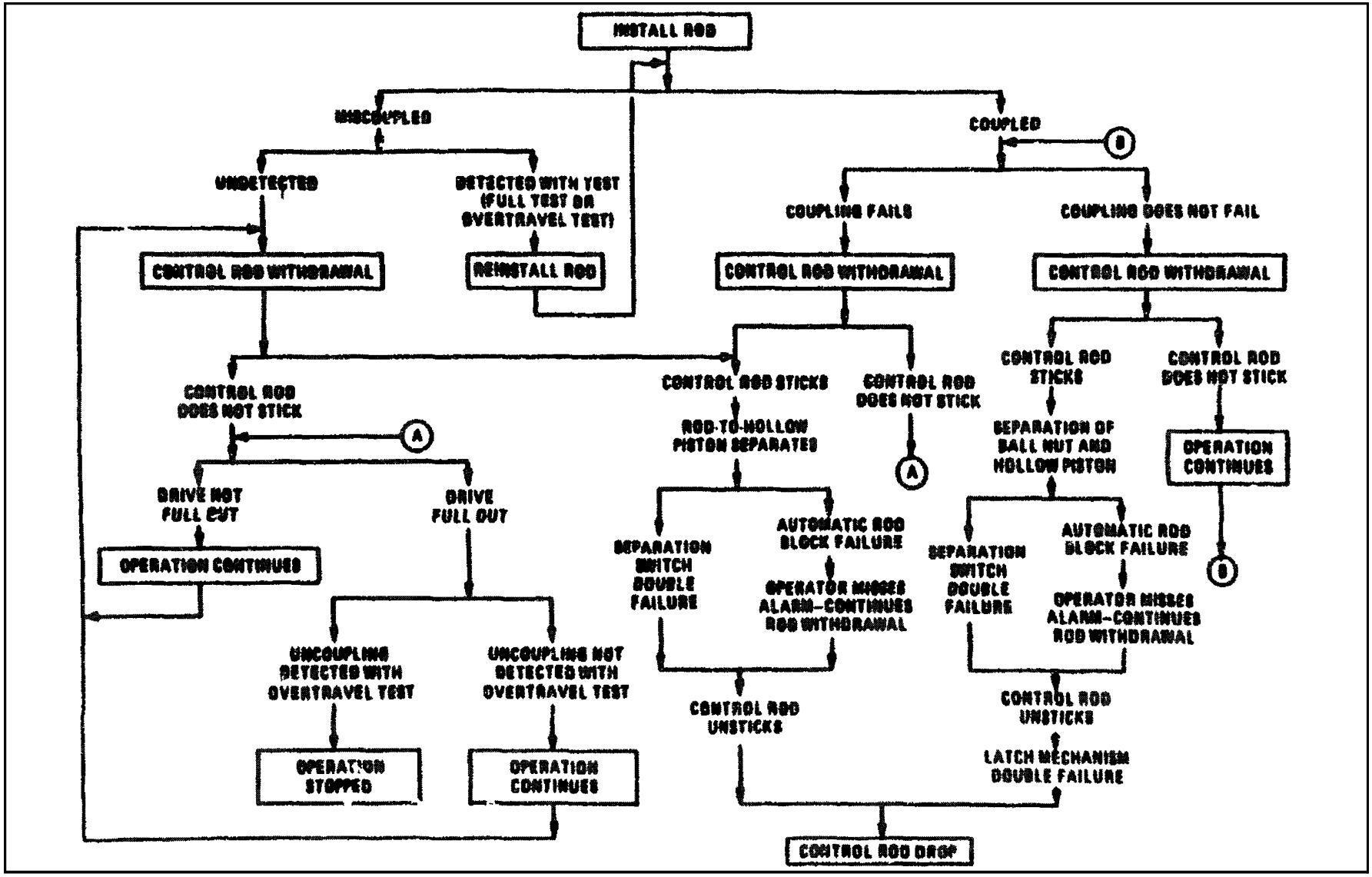

Figure 20.3.4-4 Control Rod Drop Accident Scenario for FMCRD (Response To Question 440.32).

The following figures are located in Chapter 21:

Figure 20.3.4-5a Low Pressure Core Flooder Sparger

Figure 20.3.4-5b Low Pressure Core Flooder Sparger

Figure 20.3.4-5c High Pressure Core Flooder Sparger (Response to Question 440.59)

20.3.5 Response to Fifth RAI — Reference 5

Question 210.3

In Subsection 3.1.2.1.1.2, “Evaluation Against Criterion 1", a footnote states that “important-to-safety” and “safety-related” are considered equivalent in this SSAR. The staff does not agree with this definition. The staff's position on this issue remains as stated in NRC Generic Letter 84-01, “NRC Use of the Terms “Important to Safety” and “Safety-Related”, dated January 5,1984. The staff used this position as guidance in its reviews of applications for operating licenses of nuclear power plants for a number of years prior to the issuance of GL 84-01. During these reviews, the staffs' evaluations of the quality assurance requirements in 10CFR50, Appendix B generally applied to the narrower class of “Safety-related” equipment as defined in 10CFR50.49(b)(1). 10CFR100, Appendix A and in Section 3.2 of this SSAR. This implied that normal industry practice for quality assurance was generally acceptable for most equipment not covered by the “safety-related” definition. However, as pointed out in Generic Letter 84-01, there have been specific situations in the past where the staff has determined that quality assurance requirements beyond normal industry practice were needed for components and equipment in the more broad “important to safety” class.

It is the staff's opinion that a strict interpretation of the ABWR position on this issue could result in an unacceptable classification of structures, systems and components for Table 3.2-1 in this SSAR.

Revise the footnote in Subsection 3.1.2.1.1.2 and the discussion in Section 3.2 to be consistent with the staff's position as stated in Generic Letter 84-01. It should be made clear that the staff's position will not result in a broadening of the staff's review. Rather, it provides the basis which the staff has been using and continues to use as guidance in its reviews of Quality Group Classification for certain components and equipment which are not included in the “safety-related” definition.

Response 210.3

Subsection 3.1.2.1.1.2 has been revised and the footnote deleted. The ABWR is consistent with the definition of important to safety as defined in 10CFR50, Appendix A, General Design Criteria, as specified in the Nuclear Regulatory Commission's Memorandum and Order dated June 6, 1984 (CLI-84-9). The Commission identified the definition of important to safety as a generic issue to be resolved by rule making. The Commission also stated that in the interim, past practice should be followed.

The past practice for all GE Nuclear Energy BWR design has been that all equipment has been identified as either safety-related or non-safety-related. For certain non-safety-related equipment, the pertinent requirements (including quality assurance requirements) have been specified on a case-by-case basis commensurate with the functional importance of the equipment (e.g., fire protection and radioactive waste treatment systems). All prior GE BWR designs have been licensed on that basis. (This includes Shoreham for which this issue was specifically addressed and resulted in the Commission's June 6, 1984 Memorandum and Order.)

The ABWR is consistent with this prior practice as specified by the Commission's Memorandum and order.

Question 210.4

In Subsection 3.2.3 “Safety Classifications”, ANSI/ANS 52.1-1983, “Nuclear Safety Criteria for the Design of Stationary BWR Plants” is referenced for the definitions of safety classes. The guidance in this document for components which are not within the scope of Regulatory Guide 1.26 has not been endorsed by the staff. Therefore, the staff does not completely accept ANSI/ANS 52.1 for the definitions of all safety classes. Questions 210.5, 210.13, 210.15, 210.17, 210.44, and 210.45 are based on this position. To assure that Table 3.2-1 will be consistent with similar tables in recently licensed BWR/6 plants, such as Perry and River Bend, the reference to ANSI/ANS 52.1-1983 should be either eliminated or revised.

Response 210.4

The safety classification methodology used to classify the ABWR equipment is the same as that used for previous GE BWR designs. The safety class definitions for ABWR while based on AISI/ANS 52.1-1983 are consistent with this classification methodology and past designs. ANS adopted the GE BWR safety classification criteria and expanded them into LWR classification criteria. The ANS LWR classification criteria were reviewed by the NRC staff during development and resolutions for all substantive comments were developed at a meeting between the NRC staff and representatives of ANS on October 12, 1982. AISI/ANS 52.1-1983 incorporated those resolutions. In addition, AISI/ANS 52.1-1983 is specified by the EPRI ALWR Requirements Program.

Question 210.5

In Table 3.2-1, Items B1.7, “Control Rods” and B1.9, “Fuel Assemblies” are classified as Safety Class 3, which is consistent with the criteria in the ANSI/ANS 52.1-1983 Standard. As stated in Question 210.4, the staff does not agree with all of the recommendations in that Standard. The staff position is that Control Rods and Fuel Assemblies should be Safety Class 2 and Quality Group B. To be consistent with this position and with staff reviews on recent BWR/6 plants, such as Perry and River Bend, revise Table 3.2-1 to change the classifications of the Control Rods and Fuel Assemblies from Safety Class 3 to 2 and add Quality Group B.

Questions 210.44 and 210.45 provides similar staff positions for Item B1.5 Safety-Related Reactor Internal Structures and Core Support Structures.

Response 210.5

The safety requirements for non-piping components such as control rods and fuel assemblies are the same whether they are designated Safety Class 2 or Safety Class 3. The Safety Class 3 designation for such items is based on a comprehensive, systematic rational. Designating the items Safety Class 2 instead of Safety Class 3 would not change the safety requirements applied to them but would cause inconsistencies with the rational. To maintain consistency, the Safety Class 3 designation will be retained.

Question 210.6

In Table 3.2.1, Item B2.5 identifies Main Steam Line (MSL) piping from the outermost isolation valve to and including the seismic interface restraint as being Safety Class 1 and Quality Group A. Figure 5.1-3b, “Nuclear Boiler System P&ID, Sheet 2" identifies the same portion of the MSL as Quality Group B. Beyond the seismic interface restraint, the MSL piping is quality Group D, which is not acceptable to the staff. To be acceptable, the MSL should be classified as recommended in Standard Review Plant 3.2.2, “System Quality Group Classification”, Appendix A, i.e., Quality Group B from the outermost isolation valve to the turbine stop valve. This staff position is based on the assumption that the ABWR MSL design differs from the BWR/6 design in that it does not contain a shutoff valve in addition to the two containment isolation valves. Revise Table 5.1-3b, Table 3.2-1, Subsection 3.9.3.1.3 and Subsection 5.4.9.3 to be consistent with the above staff position.

Response 210.6

Table 3.2-1, Subsection 3.9.3.1.3 and Subsection 5.4.9.3 are corrected. The MSL piping beyond the seismic interface restraint will be changed from Quality Group D to Quality Group B at the next revision of Figure 5.1-3b.

Question 210.7

Item B2.5 in Table 3.2-1 does not appear to agree with Figure 5.1-3c, “Nuclear Boiler System P&ID, Sheet 5", Item B2.5 states that piping in the Feedwater (FW) Systems from the outermost isolation valve to and including the seismic interface restraint is Safety Class 1 and Quality Group A. Figure 5.1-3c shows the FW line as Quality Group A up to the first spring closing check valve outside containment (F262A). The FW piping is Quality Group B between valves F262A and F282A and Quality Group D beyond F262A. There does not appear to be a seismic restraint in Figure 5.1-3c. Assuming that the ABWR FW line is similar to the BWR/6 designs, i.e., valve F282A is a shutoff valve in addition to the two containment isolation valves, the Quality Group classification of this line does not appear to be consistent with the guidelines of Standard Review Plan 3.2.2, Appendix B. Revise Table 3.2-1, Figure 5.1-3c and Subsection 5.4.9.3 to be consistent with the staff position on Quality Group in SRP 3.2.2, Appendix B. The transition from Quality Group B to D should be at the seismic interface restraint rather than shutoff valve F282A.

Response 210.7

Table 3.2-1 and Subsection 5.4.9.3 have been corrected. Figure 5.1-3c will be revised accordingly at its next revision as indicated in Figure 20.3-20.

Question 210.8

In Table 3.2-1, Item B3.1, the primary side recirculating motor cooling system piping is classified as Safety Class 3 and Quality Group C. In Subsection 3.9.3.1.4, this piping is described as being designed to the ASME Code, Section III, Subsection NB 3600, which is comparable to Safety Class 1. In Figure 5.4-4, “Reactor Recirculation System P&ID”, this piping is identified as Quality Group A. The staff's position is that this piping should be, as a

minimum, Safety Class 1, Quality Group A and meet the requirements of 10CFR50, Appendix B from the interface of the piping with the pump motor casing to and including the first pipe support. The remainder of this piping, should be the same Safety Class as the supported piping. Revise Items B3.1 and B3.2 in Table 3.2-1 to be consistent with the staff position.

Response 210.8

The Recirculation Motor Control System (RMCS) is classified Quality Group B and Safety Class 2 which is in accordance with the requirements of 10CFR50.55a. The RMCS, which is part of the reactor coolant pressure boundary (RCPB), meets 10CFR50.55a(c)(2). Postulated failure of the RMCS piping cannot cause a loss of reactor coolant in excess of normal makeup (CRD return or RCIC flow), and the RMCS is not an engineered safety feature. Thus, in the event of a postulated failure of the RMCS piping during normal operation, the reactor can be shutdown and cooled down in an orderly manner, and reactor coolant makeup can be provided by a normal make up system (e.g., CRD return or RCIC system). Thus, per 10CFR50.55a(c)(2), the RMCS need not be classified Quality Group B or Safety Class 2, however, the system is designed, fabricated and constructed in accordance with AMSE Boiler and Pressure Vessel Code, Section III, Class 1 criteria as specified in Subsection 3.9.3.1.4 and Table 3.2-1, Item B3.1, “Piping-primary side, motor cooling”, has been corrected.

Question 210.9

In Table 3.2-1, and the classification summary for the Control Rod Drive Mechanism and the Low Pressure Core Flooder System or provide a justification for not including this information. The staff position on the Safety Class of these systems is as stated in Questions 210.5 and 210.45.

Response 210.9

The classification summary for the control rod drive mechanism has been added to Table 3.2-1. Portions of the control rod drive mechanism that are part of the reactor coolant pressure boundary are Safety Class 1. All other portions of the control rod drive mechanism are Safety Class 3 (see response to Question 210.5). The low pressure core flooder system is a subsystem of the residual heat removal system and its classification summary is included in Items E1.1 through E1.15 of Table 3.2-1.

Question 210.10

Provide the basis for all Control Rod Drive System valves (Item C1.1 in Table 3.2-1) to be classified as Non-Nuclear Safety and Non-Seismic.

Response 210.10

Item C1.1 of Table 3.2-1 has been clarified. All valves required to provide the scram function are part of the hydraulic control unit which is Safety Class 2. The hydraulic control unit is Item C1.4 in Table 3.2-1. All other valves do not perform a safety-related function and are Non-Nuclear Safety.

Question 210.11
Provide the basis for portions of piping systems with the outermost isolation valves in the Residual Heat Removal System and the Reactor Core Isolation Cooling System (Items E1.3, E4.1, and E4.6 in Table 3.2-1) to be classified as Safety Class 2 and 3.

Response 210.11
Portions of piping of the residual heat removal system, high pressure core flooder system, and reactor core isolation cooling system within the outermost isolation valve which are not part of the reactor coolant pressure boundary but are part of an engineered safety feature are Safety Class 2. Examples are the suppression pool suction piping and containment spray piping. Portions of piping of the residual heat removal system, high pressure core flooder system, and the reactor core isolation cooling system which are part of the reactor coolant pressure boundary but are one 25A or less in diameter are Safety Class 2. Examples are instrument lines and drain lines. Items B1.5, E1.3, E2.1, E2.2 and E2.5 of Table 3.2-1 have been clarified; Figures 5.4-10a and 6.2-38a will be corrected at their next revision (as indicated in Figures 20.3-20b and 20.3-20c) and Subsections 9.5.1.2.4, 3.9.5.1.2.5, and 3.9.5.1.2.6 have been corrected.

Question 210.12
Items E2.1 and E2.5 in Table 3.2-1 classifies some pumps and valves within the outermost isolation valves in the High Pressure Core Flooder System as Safety Class 2. Provide the basis for this classification.

Response 210.12
See response to Question 210.11.

Question 210.13
In Table 3.2-1, Item F4.1, “Refueling Equipment Platform Assembly” is classified as Non-Nuclear Safety. To be consistent with the staff position as stated in Question 210.4 and with staff reviews on recent BWR/6 plants, such as Perry and River Bend, revise Table 3.2-1 to change this classification to Safety Class 2 and Quality Group B.

Response 210.13
Item F4.1 of Table 3.2-1, Subsection 9.1.4.1, and Table 9.1-2 have been revised to show that a quality assurance program will be applied to ensure that the design, construction and testing requirements for the refueling equipment platform assembly are met. This quality assurance commitment is similar to the commitments made for other non-safety-related equipment such as fire protection equipment, radwaste equipment and ATWS equipment.

The Non-Nuclear Safety designation for the refueling equipment platform assembly is consistent with ANSI/ANS-57.1-1980 (that has been endorsed by SRP Section 9.1.1) ANSI/ANS-52.1-1983, the EPRI ALWR Requirements Program and past industry practice. Also, in accordance with past industry practice, the assembly is Seismic Category I to prevent catastrophic collapse onto the reactor core during a seismic event. The consequences of failure of this assembly are within acceptable limits for such an event.

Question 210.14
If a Fuel Transfer System or Tube is applicable to the ABWR, add the Classification Summary for this system under Item F4, "Refueling Equipment" of Table 3.2-1.

Response 210.14
The ABWR design does not include a fuel transfer system or tube. The refueling arrangement and process for the ABWR is the same as for BWR/3, BWR/4, and BWR/5. The spent fuel storage pool is at the refueling floor level. During refueling the reactor vessel is flooded up to the spent fuel storage pool level, a gate in the spent fuel storage pool is removed connecting it to the flooded reactor vessel, and fuel is transferred underwater via the refueling platform.

Question 210.15
In Table 3.2-1, Items F5.1, "Fuel Storage Racks—New and Spent" and F5.2, "Defective Fuel Storage Container" are classified as Non-Nuclear Safety. Item F5.2 is also classified as Non-Seismic. To be consistent with the staff position as stated in Question 210.4 and with staff reviews on recent BWR/6 plants, such as Perry and River Bend, revise Table 3.2-1 to change the classification of Items F5.1 and F5.2 to Safety Class 3 and Quality Group C. In addition, change the seismic classification of Item F5.2 to Seismic Category I and add "B" in the Quality Assurance column for F5.2.

Response 210.15
Items F5.1 and F5.2 of Table 3.2-1 and Subsection 9.1.2.1.3 have been revised to show that a quality assurance program will be applied to ensure that the design, construction and testing requirements are met. Since the equipment is not required to prevent or mitigate a design basis event, 10CFR50 Appendix B quality assurance requirements are not required.

The Non-Nuclear Safety designation for fuel storage racks (new and spent) and the defective fuel storage container is consistent with AISI/ANS-57.1-1980 and ANS-57.2/ANSIN210-1976 (that have been endorsed by SPP Sections 9.1.1 and 9.1.2), AISI/ANS-52.1-1983, the EPRI ALWR Requirements Program, and past industry practice. The fuel storage racks are Seismic Category I commensurate with their functional importance. The consequences of a credible failure of the racks and container are within acceptable dose limits.

Question 210.16
In Table 3.2-1, the following components in the Reactor Water Cleanup System are correctly classified as Quality Group C, but are also classified as Non-Nuclear Safety:

G1.1—Vessels

G1.2—Regenerative Heat Exchangers

G1.3—Cleanup Recirculation Pump

G1.5—Pump suction and discharge piping beyond containment isolation valves

G1.8—Non-regenerative heat exchanger tube inside and piping and valves carrying process water

G1.11—Filter demineralizer holding pumps, valves and piping

To be consistent with the discussions in Subsections 3.2.2 and 3.2.3 and with the information in Tables 3.2-1 and 3.2-3, the staff is of the opinion that all of the above components should be classified as Safety Class 3 in addition to Quality Group C. Revise Table 3.2-1, Items G1l1, G1.2, G1.3, G1.5, G1.8, and G1.11 to change the Safety Class from "N" to "3" or provide a justification for not doing so.

Response 210.16

The piping portions of the reactor water cleanup system out to and including the outermost isolation valves are Safety Class 1. In accordance with past practice, the portions of the reactor water cleanup system beyond the outermost isolation valves are Quality Group C, Non-Seismic, Category I, and Non-Nuclear Safety. These latter portions are not part of the reactor coolant pressure boundary or primary reactor containment and do not perform a safety-related function. The consequences of failure of those latter portions are within acceptable dose limits. The classification summary for electrical equipment required for isolation has been added to Table 3.2-1.

Question 210.17

In Table 3.2-1, Items G2.3, "Heat Exchangers", G2.4, "Pumps and Pump Motors", G2.5, "Piping, Valves", and G2.7, "RHR Connections" in the Fuel Pool Cooling and Cleanup System are all classified as Non-Nuclear Safety, which is consistent with the criteria in the ANSI/ANS 52.1-1983 Standard. As stated in Question 210.4, the staff does not agree with all of the recommendations in that Standard. The staff position is that all of the above items should be Safety Class 3, Seismic Category 1 and listed under Quality Assurance requirements of 10 CFR 50, Appendix B. Regulatory Positions C.2 in Regulatory Guide 1.26 and C.1 in Regulatory Guide 1.29 includes this position. To be consistent with this position and with staff reviews on recent BWR/6 plants, such as Perry and River Bend, revise Table 3.2-1 to change the classification of Items G2.3, G2.4, G2.5, and G2.7 from Non-Nuclear Safety to Safety Class 3, add Seismic Category I and add "B" under Quality Assurance Requirement.

Response 210.17

The fuel pool cooling and cleanup system is Non-Nuclear Safety, Quality Group C in accordance with the SRP Section 9.1.3, AISI/ANS 52.1-1983, the EPRI ALWR Requirements Program and past industry practice. The spent fuel pool is Safety Class 3, has a Seismic Category I makeup water system and source (i.e., the RHR System) is housed in the Safety Class 3 secondary containment, and has a Safety Class 3 ventilation system. Item G2.7 of Table 3.2-1 has been corrected to show that the RHR Connections are Safety Class 3.

Question 210.18
A staff position is that piping and valves forming part of primary containment boundary should be Seismic Category 1. In Table 3.2-1, piping and valves in the Reactor Building Cooling Water System which form part of the primary containment boundary are classified as Non-Seismic. Revise Table 3.2-1 to add Seismic Category I to the classification of Item P2.1 or provide a justification for not doing so.

Response 210.18
Item P2.1 of Table 3.2-1 has been corrected.

Question 210.19
In Table 3.2-1, the following items are classified as Seismic Category I without a commitment to the Quality Assurance Requirement:

B3.1—Reactor Recirculation System piping, primary side, motor cooling

F4.1—Refueling equipment platform assembly

F5.1—Fuel storage racks, new and spent

The staff position, as discussed in Position C.1 and C.4 of Regulatory Guide 1.29 is that quality assurance requirements of 10 CFR 50, Appendix B should be applied to all structures, systems and components which are classified as Seismic Category 1. Revise Table 3.2-1 to add “B” in the Quality Assurance Requirement column for Item B3.1, F4.1, and F5.1.

Response 210.19
Item B3.1 of Table 3.2-1 has been corrected. See responses to Questions 210.13 and 210.15 for discussion of the refueling equipment platform assembly and the fuel storage racks (new and spent).

Question 210.20
One of the staff positions relative to component supports is that the Safety Class, Quality Group, Quality Assurance and Seismic Category classifications shall be identical for the supports and the supported component. Provide a commitment to this position in Table 3.2-1 and, if applicable, in Subsection 3.9.3.4, “Component Supports”.

Response 210.20
Table 3.2-1 has been revised to show that fluid system supports are the same classification as the components they support. Other supports that provide a safety-related support function are Safety Class 3.

Question 210.21
In Subsection 5.2.1.1, Table 3.2-4 is referenced to show the ABWR compliance with the rules of 10 CFR 50, Codes and Standards. Subsection 3.2 in the SSAR does not contain a reference to Table 3.2-4. In either Subsection 3.2 or 5.2.1.1, provide the information requested in

Standard Review Plan, Section 5.2.1.1, “Compliance With the Codes and Standards Rule, 10 CFR 50.55a”. This information should include the component Code, Code Edition and Code Addenda which will be applicable to ABWR pressure vessels, piping, pumps, valves, tanks, component supports and equipment.

Response 210.21

Subsection 5.2.1.1 has been corrected. The reference to the non-existent Table 3.2-4 has been deleted. As stated in Subsection 5.2.1.1, the Code edition, applicable addenda and component dates will be in accordance with 10 CFR 50.55a. The Code applicable to components is specified in Table 3.2-3.

Question 210.22

Regulatory Guide 1.151 “Instrument Sensing Lines”, dated July, 1983 conditionally endorses the Instrument Society of America Standard ISAS67.02, “Nuclear Safety-Related Instrument Sensing Line Piping and Tubing Standards for Use in Nuclear Power Plants”, 1980 as a basis acceptable to the NRC staff for the design and installation of safety-related instrument sensing lines in nuclear plants.

In addition to the commitment in Table 1.8-20, provide a statement in either Section 3.2 or 3.9 of the SSAR, that the design of safety-related instrument lines for the ABWR will be in conformance with Regulatory Guide 1.151. Footnote g to Table 3.2-1 is related to this issue, but does not provide an explicit commitment to R.G. 1.151.

Response 210.22

Note (g) of Table 3.2-1 has been revised to specify that safety-related instrument lines shall be in conformance with Regulatory Guide 1.151.

Question 210.23

Subsection 3.6.1.1.3(2) states that a pipe break event will not occur simultaneously with a seismic event. This does not agree with Standard Review Plan, Section 3.6.1, Branch Technical Position ASB 3-1, Paragraph B.2.b(1) or with the staff's interpretation of Plant Event 8 in Table 3.9-2 of the SSAR. Revise Section 3.6.1.1.3(2) to be consistent with the staff position in SRP 3.6.1 or provide a justification for not doing so.

Response 210.23

Subsection 3.6.1.1.3(2) was incorrect and has been revised to read “A pipe break event may occur simultaneously with a seismic event, however, a seismic event does not initiate a pipe break event. This applies to Seismic Category I and non-seismic Category I piping.” This is now consistent with the pipe failure methodology accepted in NUREG-0979 (GESSAR II Safety Evaluation Report).

Revised Subsection 3.6.1.1.3(2) is a declaration that, for the purpose of determining protection requirements, one postulated piping failure (Seismic Category I or non-Seismic Category I) and its direct consequences are evaluated one location at a time occurring simultaneously with a

seismic event. In other words, it is not necessary to assume that a seismic event produces multiple piping failures. This is consistent with the definition of a pipe break event given in Section 3.6. Although it is assumed that a seismic event does not initiate a pipe break event, the rules governing postulated failure locations are more favorable to seismically analyzed piping and therefore, it is normally beneficial to design non-Seismic Category I piping to withstand the SSE to avoid jeopardizing adjacent Seismic Category I piping when it is not feasible or practical to isolate non-Seismic Category I systems (see Subsection 3.7.3.13).

Question 210.24

The discussion in Subsection 3.6.2.2.1 (a) through (e) relative to the methodology used to determine blowdown forcing functions requires more detailed information. Either revise this subsection to provide a commitment to the non-mandatory Appendix B of ANS 58.2, "Design Basis for Protection of Light Water Nuclear Power Plants Against the Effects of Postulated Pipe Ruptures", or provide the following:

(1) Provide a detailed discussion of the basis for the 0.7 thrust coefficient in Subsection3.6.2.2.1(c).

(2) In Subsection 3.6.2.2.1 (e) provide a discussion (including references) of the methodology used to reduce the thrust coefficient factors of 1.26 and 2.0 by accounting for friction.

Response 210.24

Subsections 3.6.2.2.1(a) through 3.6.2.2.1(e) have been revised to provide a commitment to Appendix B of ANSI/ANS-58.2.

Question 210.25

Subsection 3.6.2.3.3 states that piping integrity does not depend on pipe whip restraints for any piping design loading combination including earthquake. Subsection 3.2.1 states that pipe whip restraints need not remain functional in the event of a Safe Shutdown Earthquake. The staff agrees that pipe whip restraints do not have to be classified as Seismic Category I, however, they should be designed to remain functional during a seismic event. Provide assurance that pipe whip restraints and their supporting structure cannot fail during a seismic event. If Subsection 3.8.3.3.2 is applicable to pipe whip restraints as well as their supporting structures, provide a reference to this Subsection in Subsection 3.6.2.3.3. Revise Subsections 3.2.1 and 3.6.2.3.3 to be consistent with the response to this question.

Response 210.25

Subsections 3.2.1 and 3.6.2.3.3 have been revised.

Question 210.26

In Subsections 3.7.2.1.3, 3.7.3.3.1.3, and 3.7.3.8.2.1, the multiple support excitation analysis method is referenced as an alternative to the envelope response spectrum method when

calculating inertial responses of multiply-supported piping and equipment. This alternate method is acceptable to the staff only under the following conditions:

(1) The multiple support input responses spectrum method may be used only when support group responses are combined by the absolute sum method.

(2) The multiple support input response spectrum method may not be used in analysis which also use the damping values from ASME Code Case N-411, “Alternate Damping Values for Seismic Analysis of Classes 1,2, and 3 Piping Sections, Section III, Division 1." This position is one of the conditions listed in Regulatory Guide 1.84, Revision 24 for using Code Case N-411.

Provide a commitment to the above conditions in an appropriate Section in the SSAR and cross reference this commitment in Subsection 3.7.2.1.3, 3.7.3.3.1.3, 3.7.3.8.2.1 and any other subsection which discusses the multiple support excitation analysis alternative.

Response 210.26

Condition (1) is not supported by the results of various independent studies performed within the industry and by national laboratories in recent years. The Independent Support Motion (ISM) Task Group of the Pressure Vessel Research Council (PVRC), Technical Committee on Piping Systems (TCPS), has reviewed the pertinent and applicable literature of recent studies, and is proposing the following technical position regarding condition (1):

(1) The responses due to motions of supports in two or more different groups are combined by the SRSS procedure.

GE endorses this position and plans to adopt it in the ABWR analysis using the multiple support input response spectrum method as an alternative approach to the envelope response spectrum method. A support group is defined by supports which have the same time history input. This usually means all supports located on the same floor, or portions of a floor, of a structure.

Condition (2) is met by committing to Regulatory Guide 1.84 in Subsection 3.7.1.3.

Question 210.27

The information in Subsection 3.7.3.4, “Basis of Selection of Frequencies” does not appear to be consistent with the guidelines in Standard Review Plan, Section 3.9.2, Paragraph II.2.C. Revise Subsection 3.7.3.4 to include a commitment that, to avoid resonance, the fundamental frequencies of components and equipment should be selected to be less than 1/2 or more than twice the dominant frequencies of the support structure.

Response 210.27

Response to this question is provided in revised Subsection 3.7.3.4.

Question 210.28
In Subsection 3.7.3.10, the statement is made that the vertical ground design response spectrum is used for equipment vertical seismic load determination if it can be shown that the structures supporting the equipment are rigid or quasi-rigid in the vertical direction. Provide definitions of "rigid", "quasi-rigid" and "support structure" in Subsection 3.7.3.10.

Response 210.28
The response to this question is provided in revised Subsection 3.7.3.10.

Question 210.29
Subsection 3.9.2.2.2.1 states that preliminary dynamic tests are conducted to verify the operability of the control rod drive (CRD) during a dynamic event. Provide a more detailed description of these tests and, if applicable, discuss how the results of the tests are correlated with the analysis of the CRD housing (with the enclosed CRD) which is mentioned in the first sentence of this subsection. If the fine motion control rod drive system is not included in these tests, describe how that system is seismically qualified.

Response 210.29
A more detailed description of the tests and the corresponding channel deflection has been added to Subsection 3.9.2.2.2.1.

The fine motion control rod drive system is not included in these tests. The equipment in the control rod drive hydraulic system, other than the control rod drives, which are classified as Seismic Category I are the hydraulic control unit (HCU) and the scram insert piping. The HCU is seismically qualified in accordance with the methods and procedures described in Subsections 3.9.1.4.1.2 and 3.9.2.2.2.3. The scram insert piping is qualified by analysis in accordance with the procedures of Section III of the ASME Code for Class 2 piping. See Subsections 3.9.1.4.12 and 3.9.3.1.19.

Question 210.30
Revise the discussion Subsection 3.9.1.4.4 to be consistent with the information in Subsection 3.9.3.4.3 for the reactor pressure vessel stabilizer and Subsection 3.9.3.5 for the supports for the fine motion control rod drive and in-core housings.

Response 210.30
Subsection 3.9.1.4.4 has been revised accordingly.

Question 210.31
In Subsection 3.9.2.1.1, ANSI/ASME OM3-1987, "Requirements for Preoperational and Initial Startup Vibration Testing of Nuclear Power Plant Piping Systems" is referenced for vibration testing of ABWR piping systems. However, in Subsections 3.9.2.1.2 and 14.2.12.1, there is no reference to OM3 for preoperational thermal expansion and dynamic testing and the information in these subsections on these phases of preoperational testing is not presented in sufficient detail for the staff to evaluate. Revise Subsections 3.9.2.1.2 and 14.2.12.1 to either

include a reference to ANSI/ASME OM3-1987 or present information similar to that for the Main Steam Line piping which is discussed in Subsections 3.9.2.1.3, 3.9.2.1.4, 3.9.2.1.5 and 3.9.2.1.6.

Response 210.31

The response to this question is contained in revised Subsection 3.9.2.1.

Question 210.32

In Subsections 3.9.2.1.1 and 14.2.12.1, there is no mention of preoperational vibration testing of safety-related instrumentation lines. It is the staff's position that all essential safety-related instrumentation lines and small borepiping should be included in the vibration monitoring program during preoperational or start-up testing. We require that either a visual or instrumented inspection (as appropriate) be conducted to identify any excessive vibration that could result in fatigue failure. Generally, this includes the portion up to and including the first support away from the connection to large bore piping or component. If observations suggest that other spans are being excited, further inspection would be conducted on a case by case basis. Revise the above Subsections to provide a commitment to this position.

Response 210.32

The response to this question is provided in revised Subsection 3.9.2.1.1.2.

Question 210.33

The discussions in Subsection 3.9.2.5 and 3.9.5.2 relative to the dynamic system analysis of reactor internals under faulted conditions does not provide enough detailed information for the staff to evaluate. Standard Review Plan, Section 3.9.2.11.5 provides the acceptance criteria which the staff uses to evaluate this issue. Information in sufficient detail to implement this criteria is required before the staff can complete its evaluation. Revise Subsection 3.9.2.5 to include this information either in the form of references or an additional appendix in Section 3.2 of the ABWR SSAR.

Response 210.33

Response to this Question is provided in revised Subsection 3.9.2.5.

Question 210.34

In Table 3.9-2, the acceptance criteria for the stresses resulting from the service loading combination of normal loads plus the most limiting safety-relief valve loads plus turbine stop valve closure induced loads is identifies as ASME Level D Service Limits. If this is a typographical error, replace Level D with Level B in this table. If it is not an error, provide the justification for using Level D Service Limits for this loading combination.

Response 210.34

Responses to this question is provided in revised Table 3.9-2

Question 210.35

Provide the basis for assuring that the feedwater isolation check valves can perform its intended function and satisfy GDC 54 and 55 following a feedwater line break outside containment. Additionally, discuss what actions have been taken to preclude the possibility of a feedwater pump trip transient causing a feedwater line break outside containment.

Response 210.35

Satisfaction of GDC 54 and 55—The check valve outside of containment and next to the penetration has an actuator that applies an additional force to the disc when the disc of the check valve in the closed position. This additional force applied to the disc when the disc of the check valve is in the closed position results in a positive leakage seal. This positive leakage seal is independent of the force of gravity or the pressure developed by the reverse flow of water from the reactor. When the disc is in the open position, the additional force is not applied.

The check valve actuator consists of an air cylinder and a solenoid. When the disc of the check valve is in the opened position, the solenoid is normally energized and ports air pressure to the air cylinder. In this state, the internal spring within an air cylinder is compressed by the air pressure applied to a piston within a cylinder.

Upon the loss of feedwater flow to the reactor, the disc of the check valve will move to a closed position. The spring remains in a compressed state with no force being applied to the disc other than the forces resulting from the reverse flow from the reactor and gravity.

A control room signal de-energizes the solenoid and shuts off air pressure to the cylinder and vents the air pressure within the cylinder to ambient pressure. The loss of air pressure to the cylinder allows the spring to expand and apply a force to the disc through the linkage of the check valve. This force results into a sealing force being applied directly to the disc. The applied spring force insures that the disc remains closed and that the leakage remains within the required limits.

Feedwater Pump Trip Transient—The dynamic characteristics of the feedwater control system specify that the feed pump discharge gate valves shall have a maximum opening/closing rate of at least 10 times slower than that of the low flow control valve. Control of the main feed pump discharge flow rate is by turbine speed control, so large flow control regulating valves which can rapidly close against the inertia of full flow are not needed or included in the feedwater system design. Instead, relatively slow closing gate valves are used for isolation, thus avoiding water hammer effects due to rapid flow throttling by quick closing regulating valves.

In addition, minimum flow recirculation lines are provided on the discharges of feedwater and condensate pumps. A rapid reduction in feedwater flow, resulting from a pump trip or valve closure would result in increased recirculation flow. Specifically, minimum flow recirculation flow control valves would open in response to the reduced feedwater flow. This action would serve to reduce the pressure transient in the piping upstream of the tripped pump.

Question 210.36

The discussions of ASME Class 1, 2 and 3 safety-related code components in Subsections 3.9.3.1.3 through 3.9.3.1.7 and 3.9.3.1.9 through 3.9.3.1.19 use the terms "designed and evaluated" in accordance with ASME Section III rules for Class 1, 2 and 3 components. In discussions of this nature, the word "constructed" should be used rather than "designed and evaluated" where construction is defined in accordance with the ASME Section III, Subsection NCA 1100 definition, i.e., "an all inclusive term comprising materials, design, fabrication, examination, testing, inspection and certification required in the manufacture and installation of items". Revise all of the above Subsections to state that all of these components are constructed in accordance with the ASME III NCA 1100 definition.

Response 210.36

Subsections 3.9.3.1.3 through 3.9.3.1.7 and 3.9.3.1.9 through 3.9.3.1.19 have been revised as requested.

Question 210.37

Subsection 3.9.3.2 contains several references to IEEE-344, "IEEE Recommended Practices for Seismic Qualification of Class IE Equipment for Nuclear Power Generating Stations" with no issue date. To be consistent with current staff positions on this issue, revise each of these references to read "IEEE STD. 344-1987" and add a commitment to NRC Regulatory Guide 1.100, Revision 2, "Seismic Qualification of Electrical Equipment in Nuclear Power Plants" to each reference. The staff considers these two documents to be applicable to mechanical as well as electrical equipment.

Response 210.37

The revisions and issue dates for Regulatory Guides and Industrial Codes and Standards applicable to the ABWR design are provided in Tables 1.8-20 and 1.8-21, respectively. The Regulatory Guide 1.100 entry in Table 1.8-20 has been updated to Revision 2, June 1988. The corresponding 1987 issue of IEEE Standard 344 will be included in Table 1.8-21 when this table is provided by March 31, 1989.

Question 210.38

Subsection 3.9.3.3.2, "Other Safety-Relief Valves" references ASME Section III, Appendix 0 for the safety-relief valve opening and pipe reaction loads which will be used in the design of ABWR safety-relief valves. The staff's position on this issue is that if Appendix 0 is used, the additional criteria in Standard Review Plan, Section 3.9.3, Paragraph II.2 is applicable. Revise Subsection 3.9.3.3.2 to include a commitment to this position.

Response 210.38

Subsection 3.9.3.3.2 has been revised to include a commitment to include the additional criteria of SRP, Section 3.9.3, Paragraph II.2.

Question 210.39

Subsections 3.9.3.4.1 and 3.9.3.5 both state that the jurisdictional boundary between component supports designed to ASME Section III, Subsection NF and the building structive shall be as defined in the project design specifications. The project design specifications may or may not agree with the definitions of jurisdictional boundaries which are in ASME Subsection NF. Therefore, revise Subsections 3.9.3.4.1 and 3.9.3.5 of the ABWR SSAR to provide a commitment that the 1987 Addenda to the 1986 Edition of ASME Section III, Subsection NF will be used to define the jurisdictional boundary between Subsection NF component supports and the building structure.

Response 210.39

Subsections 3.9.3.4.1 and 3.9.3.5 have been revised by eliminating the phrase "shall be as defined in the project design specifications" in the first sentence. GE commits to the 1989 edition of ASME Code Section III, Table 1.8-21 has been revised accordingly.

Question 210.40

The information in Subsections 3.9.3.4.2 and 3.9.3.5 relative to analysis for buckling of the reactor pressure vessel support skirt and other ASME III component supports needs to be updated and clarified as follows:

(1) Paragraph 1370 (c) of ASME III, Appendix F, which is referenced in both of the above subsections was deleted in the Summer, 1983 Addenda to ASME III, Division 1 Appendices. ASME Appendix XVII, which is referenced in Subsection 3.9.3.5 was deleted in the Winter, 1985 Addenda. Revise Subsections 3.9.3.4.2 and 3.9.3.5 to provide references which are applicable to the latest edition of ASME, Section III.

(2) Provide a more detailed description of how the critical buckling strength of the RPV support skirt and other ASME III component supports will be determined.

Response 210.40

Response to this question is provided in revised Subsections 3.9.3.4.2 and 3.9.3.5.

Question 210.41

The following information is required in Subsection 3.9.3.4 relative to the design of bolts for component supports:

(1) Provide the allowable stress limits and/or safety factors which are applicable to bolts used in equipment anchorage, component supports and flanged connections.

(2) Specifically provide a discussion of the design methods applicable to expansion anchor bolts and cast-in-place used in component supports and equipment anchorage.

Response 210.41

Response to this question is provided in revised Subsection 3.9.3.4.

Question 210.42

In Subsection 3.9.3, provide the design basis which will be used in the ABWR to insure the structural integrity of safety-related heating, ventilation and air conditioning ductwork and its supports.

Response 210.42

Safety-related HVAC ducts are Class 3 ASME components per Tables 3.2-1, 3.2-2 and 3.2-3. To insure the structural integrity of safety-related HVAC ductwork and its supports, they will be designed in accordance with Section 8.2.1 of Chapter 9 of the EPRI ALWR Requirement document.

Question 210.43

Subsection 3.9.4 outlines seven types of tests which will be used as a basis for the ABWR Control Rod Drive (CRD) Performance Assurance Program. The first type, “Development Tests” are discussed in Subsection 4.6.3.1. According to this discussion, at least three different prototype designs of the Fine Motion Control Rod Drive (FMCRD) have been subjected to various test programs. The staff's Question 440.8 requested the results of the tests of the inplant FMCRD prototype which are currently being conducted at LaSalle, Unit 2. In addition to a response to Question 440.8, provide a description of the differences between the initial, implant and reference FMCRD designs and, if applicable, a discussion of any correlation that may exist between the accumulated test data from all three designs and the design criteria discussed in Subsections 3.9.1.1, 3.9.1.4 and 3.9.3 and Table 3.9-2.

Response 210.43

Comparison of the Various Test Drives—The early testing was first performed on FMCRDs that were basically the same as those that have been used in German reactors for many years but with the induction motor that was used in Europe, replaced with a stepping motor. The stepping motor which is normally used in robots and other precision positioning applications was adopted to provide improved fine positioning.

As the requirements for ABWR developed, the need for other features was identified. These features were the permanent full in indication, failed buffer detection, redundant separation switches and the bayonet coupling. Each of these features were added to the test program and tested.

The Inplant test item incorporated all those features except the failed buffer detection and permanent full in indication.

The Inplant test drive used a position probe more like that used in the existing locking piston drives which have indication every 10% of stroke whereas the final design has 0, 10, 40, 60 and 100% switches. This difference was for compatibility with the plant.

Another difference is the scram porting. In the Inplant test, the existing insert and withdraw lines were converted to both be scram lines. In the final design there is a single larger scram line.

As the ABWR design developed the need for extremely fine (5mm) step sizes became superfluous and the fine synchro position indicators were eliminated from the design leaving only the redundant coarse synchros. The Inplant drive had already been built when this change was made therefore, it retained the fine synchros.

There are the major differences between the various test units and the final design.

As previously stated in the response to Question 440.8, the summary of the Inplant test will be provided in September, 1989.

Applicability to the Design Criteria—The test program has no direct applicability to the design criteria stated in Subsections 3.9.1.1, 3.9.1.4 and 3.9.3 and Table 3.9-2. The testing was functional and life testing whereas the mentioned sections contain design criteria that will be satisfied by quantified analysis.

Question 210.44

Subsection 3.9.5.1.1 states that the core support structures in the ABWR are classified as Safety Class 3. The staff's position is that these structures are necessary to help maintain core geometry and should therefore be classified as Safety Class 2 to obtain a higher level of quality assurance than Safety Class 3. Revise Tables 3.2-1 and 3.2.3 and Subsection 3.9.5.1.1 to agree with this position.

Response 210.44

The safety requirements applied to non-piping components such as the core support structures are the same whether they are designated Safety Class 2 or Safety Class 3. The Safety Class 3 designation for such items is based on a comprehensive, systematic rational. Designating the core support structures Safety Class 2 instead of Safety Class 3 would not change the safety requirements applied to them but would cause inconsistencies with the rational. The rational is endorsed by AISI/ANS 52.1-1983 and the EPRI ALWR Requirements Program. To maintain consistency, the Safety Class 3 designation will be retained for the core support structures.

Question 210.45

In Subsections 3.9.5.1.2.4, 3.9.5.1.2.5 and 3.9.5.1.2.6, the feedwater spargers, RHR/ECCS low pressure flooder spargers and the ECCS high pressure core flooder spargers and piping are all classified as Safety Class 3. The staff's position is that these reactor internal components are necessary to help accomplish the safety function of emergency core cooling and should therefore be classified as Safety Class 2 to obtain a higher level of quality assurance than Safety Class 3. Revise Table 3.2-1 and Subsections 3.9.5.1.2.4, 3.9.5.1.2.5 and 3.9.5.1.2.6 to agree with this position.

Response 210.45

Table 3.2-1 and Subsection 3.9.5.1.2.4, 3.9.5.1.2.5 and 3.9.5.1.2.6 have been revised to show that the feedwater spargers, RHR/ECCS low pressure flooder spargers, and the ECCS high pressure core flooder spargers and piping are Quality Group B and Safety Class 2.

Question 210.46
Portions of the stress, deformation and buckling limits for safety class reactor internals which are listed in Tables 3.9-4, 3.9-5 and 3.9-6 requires additional review by the staff. If either Equation b in Table 3.9-4, Equations e, f, and g in Table 3.9-5 or Equation c in Table 3.9-6 will be used in the design of safety class reactor internals for the ABWR, provide a commitment in each of these tables that supporting data will be provided to the staff for review.

Response 210.46
A commitment to provide supporting data for NRC review has been added as requested.

Question 210.47
The information in Subsection 3.9.6 infers that only ASME Class 1, 2 and 3 pumps and valves will be included in the inservice testing (IST) program for the ABWR. It is the staff's position as stated in Standard Review Plan, Sections 3.9.6.II.1 and 3.9.6.II.2 that all pumps and valves which are considered as safety-related should be included in the IST program even if they are not categorized as ASME Class 1, 2 or 3. Revise Subsection 3.9.6 to agree with this position.

Response 210.47
Response to this question is provided in revised Subsection 3.9.6.

Question 210.48
The first paragraph in Subsection 3.9.6 states that accessibility for inservice testing of applicable pumps and valves is provided in the plant design. However, the second paragraph and Subsection 3.9.6.3 infers that relief from ASME Section XI inservice testing will be submitted for some pumps and valves.

Response 210.48
GE is aware that there may be a need for exceptions in cases where access or configuration prohibits some types of NDE or where operability of certain equipment must be tested indirectly rather than by direct operation (based on the type of equipment). However, it is not GE's intention to take deliberate exception to Section XI requirements on the basis of inappropriate design. Therefore, Subsection 3.9.6.3 has been removed.

Question 210.49
In Subsection 3.9.6, "Inservice Testing of Pumps and Valves," provides a commitment to perform periodic leak testing of all pressure isolation valves in accordance with the applicable sections of the technical Specifications for recently licensed BWR/6 plants. Normally, this information includes a list of all pressure isolation valves which will be leak tested. If such a list is not available for the ABWR, a commitment to provide the list of valves as a part of the ABWR Technical Specifications will be acceptable.

Response 210.49
Response to this question is provided in revised Subsection 3.9.6.

Question 210.50

In accordance with NRC Bulletin 88-08, "Thermal Stresses in Piping Connected to Reactor Coolant Systems," the staff is currently requesting licensees and applicants to review systems connected to the reactor coolant system to determine whether any sections of such piping which cannot be isolated can be subjected to stresses from temperature stratification or temperature oscillations that could be induced by leaking valves. If this phenomenon was not considered in the design analysis of the ABWR piping, submit a response to action Item 3 in Bulletin 88-08 which will be applicable.

Response 210.50

In the ABWR design, the systems connected directly to the reactor coolant system (or the reactor pressure vessel (RPV) are the nuclear boiler system and the emergency core cooling systems. In the nuclear boiler system, the feedwater subsystem which supplies makeup water to the RPV has been thoroughly reviewed from the point of view of temperature stratification. The design requirements for temperature stratification of feedwater piping has been satisfactorily defined in system specification and piping cycle diagrams.

In the emergency core cooling systems, both the residual heat removal (RHR) system and high pressure core flooder (HPCF) have piping that is directly connected to RPV.

In the RHR system, the unisolatable sections of piping connected to RPV are in two areas:

(1) The low pressure flooder (LPFL) injection line; section of the pipe between the RPV nozzle and the upstream check valve.

(2) The shutdown cooling suction line; section of pipe between RPV nozzle and the normally closed inboard isolation valve.

In (1) above, temperature stratification during normal plant operation will not occur because the second upstream isolation valve (normally closed gate valve) does not leak cold water towards the reactor side. This is because the pressure is always higher on the reactor side during normal plant operation when the upstream pumps are not operating. Also during periodic testing of the loop, when the pump are operating, the maximum pressure at the upstream of the valve is less than the reactor pressure. Moreover, the LPFL design and operating pressure is less than the reactor pressure so that there is no chance of cold water leakage towards the reactor side during normal plant operation.

In (2) above, due to similar reasoning as for (1), i.e., higher pressure in the reactor side of the valve, the cold water leakage in the unisolatable section of pipe is not possible.

In the HPCF system the only unisolatable piping connected to RPV is the section of pipe between the reactor nozzle and the upstream isolation check valve. Cold water in this system is at the upstream of the injection valve (gate valve) which is outside the primary containment. The region upstream of the injection valve operates at a pressure lower than reactor pressure

except when the HPCF safety function is required. Therefore, cold water flowing to the unisolatable pipe section does not occur and stratification is not a problem in the HPCF system.

Question 271.1

Subsection 3.10.1.3 states that the ABWR program for dynamic qualification of Seismic Category 1 electrical equipment meets the criteria contained in IEEE-344 as modified and endorsed by Regulatory Guide 1.100. To be consistent with recent staff positions on this issue, revise Subsection 3.10.1.3 to read “IEEE-344-1987 as modified and endorsed by Regulatory Guide 1.100, Revision 2”.

Response 271.1

As discussed in the response to Question 210.37, the revisions and issue dates for Regulatory Guides and Industrial Codes and Standards applicable to the ABWR design are provided in Tables 1.8-20 and 1.8-21, respectively. The Regulatory Guide 1.100 entry in Table 1.8-20 has been updated to Revision 2, June 1988. The corresponding 1987 issue of IEEE Standard 344 is included in Table 1.8-21.

Question 271.2

Subsection 3.10.1.3, “Dynamic Qualification Program” states that Section 4.4 of GE's Environmental Qualification Program (NEDE-24326-1-P) will be used for dynamic qualification of Seismic Category 1 electrical equipment and that this report is referenced in Subsection 3.11. The reference in Subsection 3.11.7 is to the January, 1983 version of NEDE-24326-1-P. The staff's approval of this report is based on the January, 1986 Revision. Revise Reference 2 in Subsection 3.11.7 to change the date of NEDE-24326-1-P from January, 1983 to January, 1986.

Response 271.2

NEDE-24326-1-P has only undergone one revision since it was originally published and that is dated January, 1983. The staff's SER for that revision is dated October 23, 1983.

The methodology in NEDE-24326-1-P conforms to the requirements of IEEE-323 (1983) as modified and endorsed by Regulatory Guide 1.89 (Revision 1) and meets the criteria contained in IEEE-344 (1987) as modified by Regulatory Guide 1.100 (Revision 2).

20.3.6 Response to Sixth RAI — Reference 6

Question 440.75

In the ABWR design, the HPCF is tested by taking suction from and returning water to the suppression pool. Normally the suppression pool water is a lower quality than that of the CST; therefore, draining, flushing and refilling the system is required prior to returning the system to standby after testing. Please discuss the pros and cons of using the CST for testing the HPCF system. (6.3)

Response 440.75

The arguments supporting this design decision for the HPCF system are similar to those for the RCIC system. Please refer to Response to Question 440.41 for that discussion. In addition it is even more unlikely that marginally less clean suppression pool water would be injected to the vessel with HPCF since its initiation set point on low water level has been lowered to Level 1-1/2 as compared to Level 2 for RCIC.

Question 440.76

Address the following TM1-2 action items related to ECCS. (6.3)

(1) II.K.1.5

(2) II.K.1.10

(3) II.K.3.17

(4) II.K.3.18

(5) II.K.3.21

(6) II.K.3.25

(7) II.K.3.30

(8) II.K.3.31

Response 440.76

These TM1-2 action items will be addressed in Appendix 1A scheduled to be submitted by January 30, 1989.

Question 440.77

Confirm that the HPCF system meets the guidelines of Regulatory Guide 1.1 regarding pump Net Positive Suction Head (NPSH). (6.3)

Response 440.77

Response to this question is in revised Subsection 6.2.2.3.1 and new Table 6.2-2C.

Question 440.78
SRP 6.3 identifies GDCs 35, 36 and 37 in the acceptance criteria. Confirm that the HPCF system, described in Chapter 6.3 of the SSAR, meets the requirements of the above GDCs.(6.3)

Response 440.78
The HPCF system, as described in Section 6.3, meets the requirements of GDCs 35, 36 and 37 as discussed in Subsections 3.1.2.4.6, 3.1.2.4.7 and 3.1.2.4.8, respectively.

Question 440.79
Normally, the HPCF pump takes suction from the Condensate Storage Tank (CST). But, the CST is not seismically qualified or safety-related. Confirm that the system piping and level transmitters, which interface with CST, will be designed and installed such that the automatic switchover to the suppression pool takes place without failure. (6.3)

Response 440.79
The redundant CST level transmitters that input to the HPCF suction source swapover logic are Class 1E. The HPCF suppression pool and CST suction valves are seismically qualified and safety-related, as is the HPCF suction piping to a boundary interface upstream of the CST suction valve. This will ensure that the automatic swapover takes place without failure.

Question 440.80
What is the minimum quantity of water required in the condensate storage tank (CST) for HPCF operation? Give the basis for the required quantity of water in the CST. (6.3)

Response 440.80
There is no minimum CST water volume specifically reserved for HPCF makeup to the reactor. As stated in the response to Question 440.54, the 2,108,32 liters (Table 9.2-3) of water in the CST are stored for use during station blackout. This volume is then required for eight hours operation of the RCIC. There is no minimum quantity of water required in the CST for HPCF operation. The RCIC and HPCF share in the CST water and both can use water from the suppression pool.

Question 440.81
What is the closing time of test return valves F009.01C, F011.01C, F015B and F016B? They should close earlier than 36 seconds to prevent any flow diversion to the suppression pool during a LOCA. (6.3)

Response 440.81
The HPCF test return valves are specified as manufacturers standard with a nominal closing speed of 30.5 cm. For an eight inch line, this will result in a closing time of about 40 seconds which is reasonably consistent with the required system initiation time. The present design is considered adequate given the very low probability of a LOCA occurring while the system is lined up in the test mode. Additionally, standard valves of this design are known to be more reliable than special fast closing valves.

Question 440.82
Since HPCF is part of the ECCS network, the HPCF pump minimum flow line should be designed to operate for a reasonable length of time. How long can HPCF run in minimum flow mode? (6.3)

Response 440.82
The piping and valves of the HPCF system minimum flow line(s) have specified capabilities consistent with the full range of anticipated pressures and flows. It is likely that minimum flow duration restrictions, if any, would be dictated by the HPCF pump(s). Any such restrictions would depend on the exact make and model of the installed equipment which is beyond the scope of this document. However, there is a significant amount of operating history with similar pumps in this type of application and the traditional assumption is indefinite operation at minimum flow. The currently specified minimum flow (approximately 10% of rated) for HPCF is consistent with the historical data. The equipment purchase specification will require performance constant with the specified operating conditions.

Question 440.83
In the resolution of TMI-2 Action Item II.K.3.13, the BWR Owners' Group decided and the staff agreed to keep the initiating RPV level setpoint L2 for starting RCIC and HPCI systems. In ABWR design RCIC is still started at RPV level L2, but the HPCF is started at level 1.5. What is the basis for the initiating level 1.5 for HPCF? (6.3)

Response 440.83
Since the ABWR has higher high-pressure makeup water capacity than operating BWRs (i.e., 2 HPCFs and RCIC vs. HPCS/HPCI and RCIC), the water level setpoints for ABWR are determined to meet the following requirements:

(1) During anticipated abnormal transients, including a loss of all feedwater flow event, the RCIC system shall prevent the minimum water level from dropping below Level 1.5. This requirement is to minimize the challenge of HPCFs

(2) No ADS should be initiated during any abnormal transient with a failure of RCIC. That means the reactor isolation and two HPCFs initiated at Level 1.5 shall prevent the water level from dropping below Level 1 during a loss of all feedwater flow transient with RCIC failure.

Evaluations show that the selected water level setpoints for ABWR meet the above requirements. This item is one of design improvements for ABWR. It is difficult for operating plants with only RCIC and one high pressure system to meet the above requirements.

Question 440.84
In Section 7.3.1.1.1.2(3) (9) it is stated that HPCF pump discharge pressure is used as a permissive to start ADS automatically. If HPCF is available, ADS may not be required. In the

current BWR designs, only low pressure pumps discharge pressures, not HPCS, are used as permissive to start ADS. What is the basis for this change in ADS logic? (6.3)

Response 440.84

The initiation signals for the ADS are low water Level 1 and high drywell pressure. Therefore, the HPCF systems which initiate on low water Level 1.5 or high drywell pressure, will already be in operation before the ADS initiation signals are reached. If the HPCF systems are unable to prevent the water level from going below Level 1, this would indicate a substantial break. In this event, the initiation of ADS would only serve to help the situation by reducing the vessel pressure which will increase the flow of the full-pressure range HPCF systems and also allow injection by the low pressure flooders (LPFL).

Since pump discharge pressure ADS permissive is on any of the HPCF systems or the LPFL systems, the above scenario is true whether the HPCF pump discharge pressure is used as an ADS permissive signal or not. Once low water Level 1 is reached, all 3 LPFL systems will initiate any one of which will give the pump discharge pressure permissive signal. Only in the severely degraded case where no LPFL systems are available does it make any difference. However, in this case it is still better to initiate the ADS and maximize the HPCF flow by depressurizing the vessel.

Question 440.85

In SSAR Section 7.3.1.1.1.2, it is stated that ADS timer will be set at 29 seconds. Submit the analysis to support the 29 seconds time delay. (6.3)

Response 440.85

For the ABWR the ADS timer setting is chosen to insure that no core uncovery occurs for any design basis LOCA. This is accomplished with an ADS timer setting of 29 seconds which minimizes the time from level 1 initiation to low pressure flooder injection for small and intermediate breaks. The LOCA analysis in Section 6.3.3 of the SSAR assumes an ADS timer setting of 29 seconds (refer to Table 6.3-1). These results show that both the design goal of no core uncovery and all 10CFR50.46 acceptance criteria for LOCA analysis are met.

Question 440.86

SSAR Section 6.3.1.1.4, “ECCS Environmental Design Basis” refers to SSAR Section 3.11 for Qualification of ECCS Equipment. However, Section 3.11 does not provide the required information. Provide the necessary equipment qualification information. (6.3)

Response 440.86

Correct, Section 3.11 (more specifically Subsection 3.11.1) makes reference to Appendix 3I which has not yet been provided. Appendix 3I, “Equipment Qualification Environmental Design Criteria”, is currently scheduled to be provided by March 31, 1989. This appendix will provide the necessary ECCS equipment qualification information.

Question 440.87
Confirm that there are provisions for equipment maintenance during long-term coolant recirculation in the post LOCA environment for ECCS equipment. (6.3)

Response 440.87
The ABWR ECCS systems are configured as three independent divisions. Each ECCS division is configured to one quadrant of the reactor building. The RHR pumps, valves and heat exchangers etc. within each division are inside the secondary containment. Approximately one day after a LOCA, one RHR heat exchanger is capable of removing the reactor decay heat. Thus, system heat capacity should not limit any desired maintenance.

From a personnel access point of view, the secondary containment is provided with interlocked and alarmed double doors which are automatically closed post LOCA to limit air leakage to the SGTS. Personnel access will be under procedural control.

The key issue for ECCS maintenance is the spread of radioactive contamination between divisions within the secondary containment. The ABWR design does not specifically isolate air flows between divisions. However, the SGTS requirement for duct work is to arrange inlets and outlets to minimize the spread of contamination within the reactor building. This duct work configuration should make the post accident maintenance of ECCS equipment possible.

Question 440.88
Confirm that long-term cooling capacity is adequate in the event of failure of any single active or passive component of the ECCS. (6.3)

Response 440.88
Long-term cooling capacity of the emergency core cooling system (ECCS) is indeed adequate in the event of failure of any single active or passive component of the ECCS.

Question 440.89
In SSAR Section 6.3.6, References 1 and 4, latest approved revisions of NEDE-29011-P-A are given as references. Identify the latest revisions which are used for ABWR. (6.3)

Response 440.89
These references have been deleted (note that the reference section is now 6.3.7).

Question 440.90
In Table 6.3-6 “Plant variables with nominal and sensitivity study values,” Item #5 metal water reaction rate, nominal value is given as “EPRI coefficients.” Confirm that the EPRI coefficients are the same as used in the model already approved by the staff or identify the EPRI report which discusses these EPRI coefficients. (6.3)

Response 440.90
The following report discusses the “EPRI coefficients” used to define the metal water reaction rate in Table 6.3-6:

"Zircaloy Cladding ID/OD Oxidation Studies", EPRI NP-525 Project 251-1, Final Report, November 1977."

Question 440.91

SSAR Sections 6.3.3.5 and 6.3.3.6 refer to Reference 4 instead of addressing the subjects "use of dual function components for ECCS" and "Limits on ECCS system parameters." Briefly describe the above subjects in the SSAR. (6.3)

Response 440.91

Subsections 6.3.3.5 and 6.3.3.6 have been modified as requested.

Question 440.92

List all computer codes used in the LOCA analysis and give a brief description of each code. (6.3)

Response 440.92

Four General Electric computer codes are utilized to evaluate the performance of the ABWR ECCS following a LOCA. They are LAMB, SCAT, SAFR and GESTR. The following is a brief description of each code.

The LAMB code is a model which is used to analyze the short-term thermodynamic and thermal-hydraulic behavior of the coolant in the vessel during a postulated LOCA. In particular, LAMB predicts the core flow, core inlet enthalpy and core pressure during the initial phase of the LOCA event (i.e., the first 5 seconds).

The SCAT code is used to evaluate the short-term thermal-hydraulic response of the coolant in the core during a postulated LOCA. Using the LAMB results identified above as input, SCAT analyzes the convective heat transfer process in the thermally limiting fuel bundle during the initial phase of the LOCA event. In particular, SCAT predicts the departure from nucleate boiling at any one of 24 axial nodes within the fuel bundle.

The GESTR code is used to provide best-estimate predictions of the thermal performance of GE nuclear fuel rods experiencing variable power histories. For LOCA analysis, the GESTR code is used to initialize the fuel stored energy and fuel rod fission gas inventory at the onset of a postulated LOCA.

The SAFR code is used to calculate realistic long-term thermal-hydraulic behavior of the coolant in the vessel during a LOCA. Some important system parameters calculated by SAFR are vessel pressure, vessel water level and ECCS flow rates. The SAFR code also employs a heatup model with a simplified radiation heat transfer correlation to calculate peak cladding temperature (PCT) and local maximum oxidation.

The above analytical models are documented in Reference 1 of Subsection 6.3.3.

Question 440.93

Section 6.3.3.7.2 accident description refers to Reference 4. Provide a brief description of the accident. For details Reference 4 can be used. (6.3)

Response 440.93

A short description of the major events occurring during the limiting HPCF injection line break is provided below.

Immediately after the postulated doubled-ended break of the HPCF injection line, the reactor is scrammed and the vessel pressure begins to decrease. However, it is maintained at about 6.73 MPaG by the pressure controller.

Offsite power is assumed to be unavailable. The reactor internal pumps (RIPs) have power supply diversity which prevents all pumps from being tripped simultaneously on loss of offsite power. Furthermore, 6 of the 10 RIPs have M/G sets which significantly increase the rotating inertia of those pumps. However, in order to simplify the analysis, it is conservatively assumed that all RIPs are tripped at the start of the LOCA event, even though the All Pump Trip event is considered an accident in its own right. This results in a rapid core flow coast down and loss of nucleate boiling in the upper part of the high powered bundles. The cladding temperature in these bundles rises quickly to about 537.8 °C due to the stored energy in the fuel. Thereafter, the cladding temperature gradually decreases due to the continued reduction in decay heat generation.

There is an initial rapid drop in the reactor water level due to the collapsing of the core voids following scram. Therefore the water level continues to drop due to the vessel inventory loss through the break. The RCIC is initiated on low water level 2 and begins injecting at about 50 seconds into the event. However, the RCIC makeup flow is insufficient to maintain the water level. Closure of the main steam isolation valves occurs on low water level 1.5 at about 80 seconds into the event.

The vessel pressure increases almost to the safety-relief valve setpoint before the ADS actuation occurs on low water level 1 at about 160 seconds into the event. The vessel pressure decreases rapidly causing water level swell due to void formation within the fluid. As the depressurization rate lessens the water level drops due a corresponding drop in the void formation rate and continued mass loss through the ADS valves and the HPCF break.

Once the vessel pressure drops below the shutoff head of the LPFL systems at about 350 seconds, LPFL injection begins. This flow is sufficient to quickly restore the water level to within normal limits.

Question 440.94

Why is there no discharge line fill pump provided for the HPCF system? How does the system design reduce water hammer during the pump startup? (6.3)

Response 440.94

The discharge line fill function for the HPCF system is provided statically by connection to the makeup water system (i.e., CST) as described in the last sentence of Subsection 6.3.2.2.5.

Question 440.95

List the capacity and settings of all relief valves provided for the ECCS to satisfy system over pressure. (6.3)

Response 440.95

The ECCS relief valve capacities and settings are provided below:

(1) RHR

Valves F031A, B, C - Discharge Line
Capacity: 25A pipe size
Setting: 3.45 MPaG

Valves F008A, B, C - Near Heat Exchanger
Capacity: 25A pipe size
Setting: 3.45 MPaG

Valves F068A, B, C - Suction to Reactor
Capacity: 25A pipe size
Setting: 1.38 MPaG

Valves F015A, B, C - Suction to Suppression Pool
Capacity: 25A pipe size
Setting: 1.38 MPaG

Valves F035A, B, C - Heat Exchanger Secondary Inlet
Capacity: 25A pipe size
Setting: 1.38 MPaG

(2) HPCF

Valves F018B, C - Discharge Line
Capacity: 25A pipe size
Setting: 10.79 MPaG

Valves F014B, C - Suction to Suppression Pool
Capacity: 25A pipe size
Setting: 1.38 MPaG

(3) RCIC

Valves F017 - Pump Suction
Capacity: 50A pipe size
Setting: 1.38 MPaG

Valves F018 - Cooling Water
Capacity: 50A pipe size
Setting: 0.52 MPaG

Valves F033 - Vacuum Tank
Capacity: 25A pipe size
Setting: 0.034 to 0.048 MPaG

Question 440.96
Revise SSAR Section 6.3.2.2.1 HPCF to include a description of relief valves provided in the suction and discharge of the HPCF pump. (6.3)

Response 440.96
Subsection 6.3.2.2.1 has been revised to include a reference to the HPCF pump suction line relief valve. An HPCF discharge line relief valve is not required nor provided.

Question 440.97
SSAR Table 5.4-2 gives the design parameters for RCIC system components. Provide similar information for RHR and HPCF systems. (6.3)

Response 440.97
Response to this question is provided in Subsection 6.3.2.2 and new Tables 6.3-8 and 6.3-9.

Question 440.98
Confirm that 0.099 ft^2 is the lower limit of pipe break size for which ECCS operation is required. (6.3)

Response 440.98
The feedwater system alone can maintain the reactor vessel water level for a large range of pipe break sizes. Specifically, it can maintain the level for a pipe break of 0.0092 m^2 for over an hour at full reactor pressure. However, the 0.0092 m^2 pipe break size is the effective break area of an HPCF injection line break and is not intended to be any design limit. Given this break and assuming an additional single failure in the ECCS network, analysis in Section 6.3.3 of the SSAR confirm that there is still sufficient ECCS remaining to meet all 10CFR50.46 acceptance criteria for LOCA analysis.

Question 440.99
In the RCIC system description (Ref. 5.4.6.1.1.1) it is stated that the mixture of the cool RCIC water and the hot steam quenches the steam. Since RCIC is injected to the reactor through the feedwater system, this statement may not be true. (6.3)

Response 440.99

When the feedwater sparger is submerged, it is assumed in both LOCA and transient analysis that the RCIC makeup flow does not quench steam in the vessel steam space. However, for many LOCAs and transients the two-phase level in the vessel annulus drops below the feedwater sparger during some portion of the event. It is during this time that the RCIC flow condenses steam as it falls from the feedwater sparger to the two-phase mixture below.

Question 440.100

In the remote shutdown system RCIC controls are replaced by HPCF controls. Traditionally, RCIC was used for remote shutdown because the system will be available during station blackout. Describe the basis for replacing RCIC controls with RPCF controls in the remote shutdown panel (6.3).

Response 440.100

The basis for replacing RCIC with HPCF controls in the remote shutdown system (RSS) panel was simplification of the operator interface. The RCIC system requires a more complex control interface with the operator than the HPCF system. This is particularly true with the ABWR RCIC design which includes a bypass start system involving the coordination of two valves for initial acceleration of the turbine. Control of the HPCF system requires only startup of the HPCF pump and flow control by a regulating valve.

The question asserts that RCIC has traditionally been used for remote shutdown because of its availability during station blackout. This premise is correct. Station blackout is not a design basis for the RSS. Station blackout at the RSS is beyond the traditional single failure design basis, because it assumes station blackout failure in addition to the failure that necessitated control room evacuation (fire, etc.).

Question 440.101

SSAR Table 9.3-1 is not complete. Include pump flow and other parameters for all modes of operation. The existing Table 9.3-1 gives only test modes. (9.3.5)

Response 440.101

Response to this question is provided in revised Table 9.3-1.

Question 440.102

In current BWRs explosive valves are used at SLCS pump discharge. Why are they deleted? How is boron leakage into the reactor vessel prevented during testing? (9.3.5)

Response 440.102

The explosive valves were not “deleted” but were replaced by two motor operated injection valves. Eliminating the explosive valves from the SLCS was based on system design improvements. On earlier plants, the SLCS piping is not completely isolated from the SLCS storage tank and it is possible for boron to be present in the SLCS piping. Consequently, it was decided to provide leak proof explosive valves in early BWRs so that boron can not leak into

the reactor during SLCS testing. In the ABWR SLCS design, the boron storage tank is provided with normally closed isolation valves and a suction pipe fill system to keep boron solution in the storage tank and prevent it from entering the SLCS piping. Because of this design change, GE concluded that the leaktight explosive valves are not required in the ABWR pump discharge piping. This is also believed to be a design improvement because using motor operated valves instead of explosive valves has the following advantages:

(1) Simplifies piping design and thus avoid additional pipe protection design for thermal expansion and possible hydrodynamic loads during initiation.

(2) Cuts down radiation exposure to the operators during testing and maintenance of the system because less maintenance work at the valves will be required.

(3) Enhances the post-injection containment isolation capability without degrading system reliability. (This is because the ABWR valves can be closed following boron injection; explosive valves cannot be closed to provide containment isolation.)

Boron leakage into the reactor vessel is prevented during testing by using demineralized water. For the injection test mode the motor operated injection valves are operated and demineralized water is injected into the reactor from the test tank. The injection test mode can only be performed during plant shutdown periods. For the circulation test mode demineralized water is circulated from the test tank through the pump back to the test tank during normal plant operation. For both tests the motor operated valves at the SLC tank outlet are closed to prevent boron solution from reaching the reactor vessel.

Question 440.103

The ATWS rule states that “Each Boiling Water Reactor must have a Standby Liquid Control System (SLCS) with a minimum flow capacity and boron content equivalent in control capacity to 86 gpm of 13 weight percent sodium pentaborate solution.” (251 vessel, Ref: NEDE 31096-P-A) How does the ABWR design with 278 diameter vessel meet the requirements of the ATWS rule, 10CFR50.62? (9.3.5)

Response 440.103

The ATWS rule contained in 10CFR50.62 specifies that:

(1) Each BWR must have an ARI system that is diverse (from the reactor trip system) from sensor output to the final actuation device.

(2) Each BWR must have a SLCS with a minimum flow capacity and boron content equivalent in control capacity to 86 gpm of 13 weight percent sodium pentaborate solution for a 251 inch RPV. For new plants, the SLCS initiation must be automatic.

(3) Each BWR must provide equipment to trip the reactor coolant circulating pumps automatically under conditions indicative of an ATWS.

In summary, the following table shows compliance with specific aspects of the ATWS rule, 10CFR50.62, for the ABWR design:

ATWS Rule	ABWR Design
1. Diverse scram system	1. Diverse ARI is provided.
2. Automatic SLCS injection	2. Automatic SLCS injection is provided.
3. Automatic RPT	3. Automatic RPT is provided.

The capacity of the SLC pumps for ABWR has been increased to yield an equivalent flow rate to the requirements.

Question 440.104

In the ABWR design, SLCS pump is started manually. But the ATWS fuel 10CFR50.62 states that "the SLCS initiation must be automatic and must be designed to perform its function is a reliable manner for plants granted construction permits after July 26, 1984." How does the ABWR design satisfies the ATWS rule? (9.3.5)

Response 440.104

See response to Question 440.103.

Question 440.105

We understand that boron mixing tests were performed for optimizing the location of boron injection. Describe the test criteria and the test results. (9.3.5)

Response 440.105

Boron mixing tests were performed in a 1/6 scale three dimensional model of ABWR with reactor internal pumps. In these tests, the overhead type high pressure core spray sparger was used as the primary injection location. Injection at the reactor internal pump suction was examined as a backup location. The objective of the tests was to understand the mixing phenomenon when a boron solution is injected into the reactor coolant, and to determine the mixing coefficient, n, which is a measure of the mixing efficiency or effectiveness as defined as:

$$n = \frac{\text{Concentration of injection solution at a measured location (region of the model)}}{\text{Concentration if well mixed with entire model inventory}}$$

A coefficient of unity thus represented the equivalent of a completely mixed solution. Incomplete mixing was characterized by coefficients less than unity in some regions of the

model and greater than unity in others. Transit time is defined as the time required for the injected solution to travel from the point of injection to the region of interest.

Based on the data analyses, the following conclusions were drawn:

(1) Boron injected through HPCF will reach the core in all conditions including time after hot shutdown. No stratification was found anywhere in the vessel for all the tests.

(2) HPCF is the recommended injection location. If HPCF were not the design basis, injection through four recirculation pump suction locations will also provide good mixing.

Question 440.106

In SSAR Section 9.3.5.3, under criterion 26, it is stated that "The requirements of this criterion do not apply within the SLCS itself." Elaborate on this assumption. (9.3.5)

Response 440.106

The identified statement has been removed.

Question 440.107

In SSAR Section 9.3.5.3, under criterion 27, it is stated that "this criterion applies no specific requirements onto the SLCS and therefore is not applicable." Describe in detail the justification for the above statement. (9.3.5)

Response 440.107

Criterion 27 (Combined Reactivity Control Systems Capability) states the requirements for the reactivity control systems to operate "in conjunction with poison addition" to maintain core cooling. Since the SLCS is the means for "poison addition", Criterion 27 gives requirements for other systems to work with the SLCS. In addition, Subsection 3.1.2.3.8.2 states that there are no credible events applicable to the ABWR which require combined capability of the control rod system and poison additions by the emergency core cooling network. Therefore, Criterion 27 "applies no specific requirements onto the SLCS."

Question 440.108

Provide further justification for the fact that the input parameters and initial conditions for analyzed events are conservative. Provide a list of what parameters will be checked at startup and which will be in the Technical Specifications. You should define the range of operating conditions and fuel types for which your input parameters will remain valid. For example, would these parameters remain valid for 9x9 or 7x7 fuel or for a similar large change in the fuel lattice. (15)

Response 440.108

The input parameters and initial conditions used in the analysis can be divided into three categories: (1) Initial operating conditions, (2) Equipment performance characteristics, and (3) Safety setpoints. Conservative values are used for all input parameters as described below:

(1) Initial Operating Condition

A Comparison of analysis values and nominal values is shown below:

	Analysis Value	Nominal Value
a. Operating Power		
- MWE	4005	3926
- % NBR	102	100
b. Vessel Dome Pressure - MPaG	7.17	7.07
c. Steam Flow - kg/h - % NBR	7.84×10^6 102.7	7.64×10^6 100

The operating power and steam flow will be limited by the operating license to their nominal values. Therefore, the analysis conditions are conservative.

(2) Equipment Performance Characteristics

In the analysis, the specified limiting equipment performance characteristics are used. These include maximum delay time, maximum response time, fastest/slowest valve spring/closing characteristics. These characteristics will be checked at startup. Therefore, the analysis is conservative.

(3) Safety Setpoints

All safety setpoints used in the analysis will be treated as analytical limits. Then the setpoint methodology approved by the NRC will be used to determine the allowable valves and nominal setpoints. These valves will be included in the technical specifications.

Regarding the nuclear conditions used in the analysis, current ABWR core and fuel design with 8x8N fuel lattice as described in GESTAR II is used. If the core and fuel design changes in the future ABWR application, limiting events will be reanalyzed to determine the operating limits as described in Subsection 15.0.4.5. Since margins have been provided in signing ABWR equipment, it is expected that ABWR can accommodate any new fuel designs.

Question 440.109
Provide an analysis of the loss of instrument air (nitrogen). (15)

Response 440.109
Loss of instrument air systems does not result in any transient more severe than MSIV closure occurs. After the MSIV closure, the reactor pressure is regulated by the safety/relief valves.

Loss of air to SJAE steam valves results in loss of condenser vacuum, which is covered in the SSAR. Availability of safety/relief valve helps reduce severity of any transient that may occur as a result of loss of air.

Primary containment purge isolation valves are not safety-related, and their closure due to loss of air does not result in any NSSS transient more severe than MSIV closure. This is also true for the closure of the ventilation supply and exhaust isolation valves for the reactor building secondary containment, closure of all other air operated isolation valves, and the stoppage of control room exhaust fan.

The most severe results of loss of instrument air, as evidenced from the above discussion, are reactor scram and isolation. This MSIV closure with concurrent scram is a transient which is bounded by the MSIV closure trip scram transient, as analyzed in the SSAR, with respect to thermal and pressure limits. Since the loss of air could, at worst, result in reactor scram and isolation, there is no potential for causing or compounding more severe events.

Question 440.110
In SSAR Table 15.0-2, the following transients are not categorized as moderate frequency event [Category (a)]

(1) Runout of two feedwater pumps (Cat.c)

(2) Opening of all Control and Bypass Valves (Cat.c)

(3) Pressure Regulator Downscale failure (Cat.c)

(4) Generator Load Rejection, Failure of One Bypass Valve (Cat.b)

(5) Generator Load Rejection with Bypass Off (Cat.c)

(6) Turbine Trip with Failure of One Bypass Valve (Cat.b)

(7) Turbine trip, Bypass Off (Cat.c)

(8) Loss of Aux. Power Transformer and one S/up transformer (Cat c)

(9) Trip of all Reactor Internal Pumps (Cat.c)

(10) Fast Runback of all Reactor Internal Pumps (Cat.c)

(11) Inadvertent HPCF pump startup (Cat.b)

Category b refers to Infrequent event and Category c refers to limiting faults.

The above categorization of transients is a significant deviation from the SRP and hence sufficient justification must be submitted to support the change in the categorization. (15)

Response 440.110

According to Regulatory Guide 1.70, Rev. 3, each initiating event should be categorized according to its expected frequency of occurrence. Each initiating event should be assigned to one of the following frequency groups:

(1) **Incidents of moderate frequency**—these are incidents that may occur during a calendar year to once per 20 years for a particular plant. This event is referred to as an "anticipated (expected) operational transient".

(2) **Infrequent incidents**—these are incidents that may occur during the life of the particular plant (spanning once in 20 years to once in 100 years). This event is referred to as an "abnormal (unexpected) operational transient".

(3) **Limiting faults**—these are incidents that are not expected to occur but are postulated because their consequences may result in the release of significant amounts of radioactive material. This event is referred to as a "design basis (postulated) accident".

The frequency of occurrence of each event is traditionally based on the nuclear safety operational analysis (NSOA) and currently available operating plant history for the transient event. The event categorization contained in the standard review plan (SRP) is based on operating experience of current BWR design with single-channel analog control systems. Since ABWR uses triplicated digital control systems, transient events caused by complex control system failures are expected to be less frequent. (See Chapter 7 for the description of control systems.) Therefore, the event frequency for ABWR transients is reevaluated based on improved ABWR system design. This evaluation is documented in subsections entitled "Identification of Causes" and "Frequency Classification" for each initiating event in Chapter 15. For example, the frequency of occurrence of the feedwater controller failure - maximum demand event is discussed in Subsection 15.1.2.1.1 and 15.1.2.1.2. For some events, conservative categorization is assigned.

Question 440.111

Provide a table similar to 15.0-2 showing your evaluation of anticipated transients with single failure. List the single failure chosen for each event and provide a justification for why the chosen failure is the most limiting. (15)

Response 440.111

Anticipated transients with additional failures are discussed and evaluated in Chapter 15. Usually, initiating events with additional multiple failures are analyzed to bound this type of event. These results are summarized in Chapter 15 of the SSAR and also in Table 15.0-2. The following is a tabulation of these events:

	Initiating Event	Bounding Event with Additional Failures
15.1.2	Runout of one FW Pump (Figure 15.1.2)	Runout of Two FW pump (Figure 15.1-3)
15.1.3	Opening of One Bypass Valve (Figure 15.1-4)	Opening of All Control and Bypass Valves (Figure 15.1-5)
15.2.1	Closure of One Turbine Control Valve (Figure 15.2-1)	Pressure Regulator Downscale Failure (Figure 15.2-2)
15.2.2	Generator Load Rejection (Figure 15.2-3)	Generator Load Rejection with Failure of One Bypass Valve (Figure 15.2-4)
		Generator Load Rejection with Failure of All Bypass Valves (Figure 15.2-5)
15.2.3	Turbine Trip (Figure 15.2-6)	Turbine Trip with Failure of One Bypass Valve (Figure 15.2-7)
		Turbine Trip with Failure of All Bypass Valves (Figure 15.2)
15.2.6	Loss of Auxiliary Power Transformer (Figure 15.2-11)	Loss of Auxiliary Transformer and One Startup Transformer (Figure 15.3-12)
15.3.1	Trip of 3 RIPs (figure 15.3-1)	Trip of All RIPs (Figure 15.3-2)
15.3.2	Fast Runback of one RIP (Figure 15.3-3)	Fast Runback of All RIPs (Figure 15.3-4)
15.4.5	Fast Runout of one RIP (Figure 15.4-1)	Fast Runout of All RIPs (Figure 15.4-2)

For events not listed in the table above, initiating events with additional failures are not quantitatively analyzed because:

(1) No additional active single failure would cause the event to become more severe:

15.1.1 Loss of FW Heating

15.2.4 Inadvertent MSIV closure

(2) They are not limiting transients:

other transients not listed above

Question 440.112

Provide the following:

(1) A listing of all equipment which is not classified as safety-related but is assumed in FSAR analyses to mitigate the consequences of transients or accidents.

(2) Justification for the assumption of operability of this equipment based upon equipment quality, reliability, and proposed surveillance requirements.

(3) Discuss the consequences of those events concerning (i) number of fuel failures, (ii) delta CPR and (iii) delta perk pressure that would result if only safety grade systems or components were considered in the specific transients analyses taking credit of non-safety grade systems or components. (15)

Response 440.112

(1) Normal operation of the following non-safety-related equipments is assumed in the analysis of anticipated transients:

(a) Relief function of safety/relief valves

(b) High water level (Level 8) trips

(c) Turbine bypass valves

(d) Recirculation pump trip (RPT) on load rejection/turbine trip

(2) The equipments listed in (1) above are also used in currently operating BWRs. Operating experience from operating BWRs show these equipments are highly reliable. For ABWR, trip logics for these equipments are designed with redundant or triplicated design, which is a design improvement for ABWR. No single failure can cause a function to fail completely. Therefore, the availability of these equipments during ABWR transients is far better than those in operating BWRs. This high availability will also be maintained and enhanced by standard surveillance programs that are already implemented in current operating BWRs.

(3) The standard review plan (SRP) requires that an incident of moderate frequency in combination with any single active component failure, or single operation error, shall be considered an event for which an estimate of the number of potential fuel failure shall be provided for radiological dose calculations. These evaluations for ABWR transients are discussed in Chapter 15 and in the response to Question 440.111. There is no requirement that non-safety-related equipment should be assumed to fail

completely. Therefore, the evaluation requested in this question is far beyond the scope of transient analysis. However, in order to show the design margins available in the ABWR design, the following are provided for your information only:

(a) Effect of Relief Function of Safety/Relief Valves

Since the relief function of safety/relief valves is initiated after the MCPR occurs during the transient, its impact on thermal margin (i.e. delta CPR) is insignificant. The major impact of this relief function is on the peak pressures during transients. However, overpressure protection analysis, which takes credit of the spring function of safety/relief valves only, shows that a large margin to ASME code upset limit exists even if a delayed scram is considered. (See Subsection 5.2.2) Therefore, transients with a failure of the relief function of all safety/relief valves meet not only criteria for accidents, but also criteria for transients.

(b) Effect of Other Non-Safety-Related Trips

The trip logic design in ABWR assures no single failure can cause any trip function to fail completely. In order to show ABWRs capability of in-depth protection, the most limiting pressurization event (i.e. load rejection) is analyzed to evaluate the effect of additional failures on the thermal margin. The evaluation with an assumed initial CPR operating limit of 1.16 is summarized below:

	No of Additional Failures	Failed Component	MCPR	% of Rods in Boiling Transition
(a)	0	—	1.10	Meet transient criteria
(b)	1	1 Bypass valve fails to open	1.10	Meet transient criteria
(c)	1	1 RIP fails to trip on RPT	1.10	Meet transient criteria
(d)	≥3	All bypass valves fail to open	1.07	Meet transient criteria
(e)	>3	RPT fails	1.04	0.3
(f)	>6	All bypass valves fail to open and RPT fails	0.97	3.0

Events (b) to (f) above meet all criteria for limiting faults. In fact, no fuel failure is expected since the time in the boiling transition is very short (<5 seconds), and the

peak clad temperature (PCT) would be less than 593 °C even without rewetting credit.

Question 440.113

You have classified the trip of all reactor internal pumps as a limiting fault. This is based on your assumption that the loss of greater than three reactor internal pumps is 10^{-6} per year. Provide operating experience data to justify this failure rate. (15)

Response 440.113

There is no U.S. operating experience data for plants with reactor internal pumps (RIPs). The following data are obtained from an European reactor vendor:

(1) With 6 BWRs having 44 RIPs in operation of about 40 operating years, there is no event involving trip of more than one RIP. All trips involve only one RIP.

(2) All single-RIP trips were caused by faulty trips in adjustable speed drive (ASD) due to noise in ASD protective circuits.

From these data, it is concluded that a trip of more than one RIP simultaneously is extremely unlikely. The ASD design has also been modified to reduce the probability of occurrence much less than once per plant life. So it is proper to classify the trip of all RIPs as an accident, and it is conservative to treat a trip of 3-RIPs as a moderate-frequency event.

Question 440.114

The ABWR feedwater control system and the steam bypass and pressure control system use a triplicated digital system. You claim that no single failure in these systems will cause a minimum demand to all turbine control valves and bypass valves or the runout of two feedwater pumps. (15)

Question 440.114a

What is the reliability of the system?

Response 440.114a

The systems are required to have a Mean Time Between Failure (MTBF) of greater than $1x10^5$ hours. This requirements is on the failure rate of the system function, not single components.

Question 440.114b

What design feature of these systems prevent common mode failure to more than one channel?

Response 440.114b

The source of any common mode failure would be a design error in the hardware or processor software. Design procedures for control and instrumentation design were designed to preclude such design errors. These procedures specify requirements for all stages of software design, verification and validation. Specifically, requirements for the verification and validation of hardware and software specify procedures required to exhaustively test hardware and software

prior to use. Through this process, common mode failures due to hardware and software design errors shall be avoided.

Question 440.114c

What protection is provided in these systems against a technician disabling a second channel while performing maintenance on the first.

Response 440.114c

There are many features of the process control systems which protect against errors propagating between channels regardless of the cause of the initial error. The following discussion focuses on interfaces between channels and the features that provide protection against the propagation of faults.

The process control system channels operate independently using separate hardware components, different power supplies and separate, independent input signals. Interprocessor communication links are used to detect faults and avoid divergence of integrator states in each processor. The process of selecting the appropriate integrator state to use in all 3 processing channels is accomplished through the use of middle value voters included in each channel's software. This assures that a failure in one channel cannot adversely affect the operation of the other 2 channels. In addition, the interprocessor communication paths are required to have adequate transient protection to prevent propagation of faults between processors. For these reasons the interprocessor communication feature of the fault tolerant digital controllers cannot be the source of common mode failures.

Each of the three channels generates its own control signal. The three resulting control signals (1 from each channel) are converted to a single control actuator signal, locally, by a fault tolerant, middle value voter. The output of the voter (the final control signal) is fed back to each of the three processors for validation. This allows the controllers to detect a voter failure. If 2 of the 3 channels determine that a voter has failed, a lockup signal is sent to the control actuator, which locks the control actuator at its last position. This feature prevents the possibility of the final output voter failure causing a failure of the system function.

While a technician is performing maintenance on an out of service channel, the other 2 channels will recognize that the out of service channel is faulted. The technician, at worst could cause the out of service channel to generate faulty signals on the interprocessor communication links or output control signal voters, these faulty signals would be detected as faulty and ignored.

The modular design of the digital control units provides physical separation of the 3 channel's circuitry sufficient to prevent the technician from physically disturbing the circuitry of another channel.

Question 440.114d

What are the most limiting events for the case where two channels are lost in these systems?

Response 440.114d

A failed processor channel may generate output control signals of any value (high, low or in between) or it may fail to provide a signal of any kind. In the extremely unlikely event that two channels fail simultaneously, there is no assurance that the two channels would fail in the same manner. Depending on the output signals of the failed channels relative to each other and relative to the remaining good channel, the final control signal generated by the final output voter may take on the value of any one of the two failed signals or the one good signal. Therefore, the controller may fail at maximum or minimum demand.

It should be noted that the failure of one channel will not result in any deterioration of the output control signal from the voter to the control actuator. The voter selects the middle value of the three control signals generated by the three processing channels. Therefore, a single channel which fails high or low, would not be selected by the voter, because it would not be the middle value. It would require the simultaneous failure of two processing channels to effect the final output control signal.

It should also be noted that a single failure can not cause more than one processing channel to fail. Each processing channel receives triplicated input signals. The processing channel performs validation checks on the input signals to detect possible signal failures. In the event that one of the triplicated input signals fails, the processing channel would continue to generate valid control signals based on the remaining two signals. Therefore, multiple input signal failures are required to cause failure of any processing channel. Furthermore, diverse and redundant power supplies are used for the processing channels, requiring multiple failures to cause loss of any one processing channel. The only credible single failure that can cause failure of a processing channel is a hardware failure within the channel itself. This type of failure cannot propagate to the other two channels because the channels operate independently. A failure of two channels at the same time requires multiple failures to occur at the same time. Consequently, these events should be classified as accidents.

Question 440.115

Provide further analysis and numerical justification for your assertion that FMCRD design is equivalent to an ARI system and that the SLCS is not required to respond to an ATWS. (15)

Response 440.115

As described in the response to Question 440.103, the automatic electrical insertion of FMCRDs is another ATWS prevention/mitigation function in addition to the ARI system. The electrical insertion of FMCRDs provides a backup to the ARI system. Therefore, the SLCS is not required to respond to an ATWS event. However, the SLCS is still available, if both ARI and FMCRD electric insertion fail, which is extremely unlikely.

Question 440.116

For each transient and accident, identify the computer code used in the analysis in the respective section of Chapter 15. (15)

Response 440.116

The computer codes used in the analysis of transients and accidents are shown below:

Sub Section I.D.	Figure I.D.	Event	Analysis Code
15.1		Decrease in core coolant temperature	
15.1.1	15.1-1	Loss of Feedwater heating	PANACEA
15.1.2	15.1-2	Runout of one feedwater pump	ODYNA
15.1.2	15.1-3	Runout of two feedwater pumps	ODYNA
15.1.3	15.1-4	Opening of one Bypass Valve	REDYA
15.1.3	15.1-5	Opening of all Control and Bypass Valves	REDYA
15.2		Increase in Reactor Pressure	
15.2.1	15.2-1	Closure of One Turbine Control Valve	ODYNA
15.2.1	15.2-2	Pres. Regulator Downscale Fail.	ODYNA
15.2.2	15.2-3	Generator Load Rejection, Bypass on	ODYNA
15.2.2	15.2-4	Generator Load Rejection, Failure of One Bypass Valve	ODYNA
15.2.2	15.2-5	Generator Load Rejection with Bypass Off	ODYNA
15.2.3	15.2-6	Turbine Trip Bypass On	ODYNA
15.2.3	15.2-7	Turbine Trip w/Failure of One Bypass Valve	ODYNA
15.2.3	15.2-8	Turbine Trip Bypass Off	ODYNA
15.2.4	15.2-9	Inadvertent MSIV Closure	ODYNA
15.2.5	15.2-10	Loss of Condenser Vacuum	ODYNA
15.2.6	15.2-11	Loss of Aux. Power Transformer	ODYNA
15.2.6	15.2-12	Loss of Aux. Power Transformer and One Startup Transformer	ODYNA

Sub Section I.D.	Figure I.D.	Event	Analysis Code
15.2.7	15.2-13	Loss of All Feedwater Flow	REDYA
15.3		Decrease in Reactor Coolant System Flow Rate	
15.3.1	15.3-1	Trip of Three Reactor Internal Pumps	REDYA
15.3.1	15.3-2	Trip of All Reactor Internal Pumps	REDYA
15.3.2	15.3-3	Fast Runback of One Reactor Internal Pump	REDYA
15.3.2	15.3-4	Fast Runback of All Reactor Internal Pumps	REDYA
15.3.3	15.3-5	Seizure of One Reactor Internal Pump	REDYA
15.4		Reactivity and Power Distribution Anomalies	
15.4.1.1		RWE-Refueling	APEX
15.4.5	15.4-1	Fast Runout of One Reactor Internal Pump	REDYA
15.4.5	15.4-2	Fast Runout of All Reactor Internal Pumps	REDYA
15.5		Increase in Reactor Coolant Inventory	
15.5.1	15.5-1	Inadvertent HPCF Startup	REDYA
15.6		Decrease in Reactor Coolant Inventory	
15.6.5		Steam System Pipe Break Outside Containment	See Response to Question 440.92
15.6.5		LOCA Within RCPB	See Response to Question 440.92
15.6.6		Feedwater Line Break	See Response to Question 440.92

20.3.7 Response to Seventh RAI — Reference 7

Question 100.1

In light of the recent interest in BWR thermal hydraulic stability following the LaSalle instability event, it appears to be highly desirable to assure that in an advanced BWR design the possibility of instability is precluded, both in normal and anticipated abnormal operating conditions; this should be the case without requiring the prompt intervention of the operator. If actions are required, they should be automatic. If operator attention is required, suitable monitoring capability should be readily available. Please discuss the extent to which this is provided for in the ABWR. This discussion should consider (1) the various potential problem areas which have been identified in the current BWR stability review (particularly asymmetric oscillations), (2) the relevant stability related characteristics of the ABWR core such as fuel entrance loss coefficients, void reactivity coefficients, fuel conductivity, and including extremes of conditions in both the initial core and potential reload cores with different fuel, (3) accessible stability significant regions of the power-flow map, involving both normal and abnormal events (including multiple out of service or tripped recirculation pumps), (4) the Selected Control Rod Run-In (SCRRI), describing its relevant characteristics including provisions for automatic initiation, speed of operation compared to need for rapid action, boundaries of operation (on power-flow map), flexibility of these boundaries as need for change may arise, (5) the existing relevant instrumentation and the possible need for improved or augmented instrumentation such as on line stability measurement or easily available relevant LPRM readings and automatic action based on these measurements, (6) the need for frequent mapping of boundaries of operational map regions to be avoided. (Chapter 4)

Response 100.1

General ABWR Design—The stability design for ABWR follows the same design and licensing philosophy outlined in “Thermal Hydraulic Stability Amendment to GESTAR II,” NEDE-24011-P-A, Rev. 6, Amendment 8 (Reference 20.3.7-1), and “Compliance of the GE BWR Fuel Design to Stability Licensing Criteria,” NEDE-22277-P-1 (Reference 20.3.7-2). Both of these two references have been approved by the NRC (Reference 20.3.7-3). Specifically, the ABWR design assures the stability performance in the normal operating region (Regions I and IV in Figure 4.4-1) is more stable than the current operating BWRs by incorporating the following design features:

(1) Smaller inlet orifices, which increase the inlet single-phase pressure drop, and, consequently, improve the core and channel stability.

(2) Wider control rod pitch, which increases flow area, and, consequently, reduces the void reactivity coefficient and improves both core and channel stability.

(3) More steam separators, which reduce the two-phase pressure drop, and improve the stability, and

(4) Automatic logics which prevent plant operation in the region with the least stability margin.

Furthermore, automatic startup logic may be programmed to avoid the region with the least stability margin. (See the startup path in Figure 4.4-1) Therefore, it is expected that the ABWR operation in the normal operating domain (which is currently defined only below the rated rod line) is always stable.

In addition, regional (LPRM) and core-wide (APRM) neutron flux time histories are available for display to enable the reactor operator to detect any neutron flux oscillations. This capability is an addition to current conventional design. Therefore, the operator can easily detect any flux oscillations, which are very unlikely in ABWR.

Specific ABWR Stability Prevention Features—Operation in the high power/low flow region, which the system is the least damped (Region III of Figure 4.4-1) is precluded by the selected control rod run-in (SCRRI) logic. This automatic logic is shown in Figure 20.3.7-1. The setpoints shown in this figure are analytical limits determined from conservative fuel nuclear characteristics. The nominal setpoints will be determined based on the approved setpoint methodology (e.g., nominal setpoint for the flow setpoint is about 48% of rated).

The SCRRI function is automatically initiated to avoid stability concerns when a trip of two or more RIPs occurs. The SCRRI function is bypassed when the power is below a specified setpoint, or when the core flow is above a specified setpoint. The automatic initiation of the signal when a trip of two or more RIPs occur, takes place when core flow is less than or equal to 36% “AND” when the power level is greater than or equal to 30%. This is to assure power level below 80% rod line at natural circulation and to assure flow rate is higher than that of eight RIPs operating with the minimum pump speed.

The SCRRI stability control function is accomplished by the automatic initiation of electrical insertion of selected control rods and the total rod worth for the selected control rods to bring the reactor power from the 100% rod line to below 25% power to assure stable operation following a trip to two or more RIPs.

An operator has the capability in the control room to make calculations based on previous operations and determine the rod worth necessary and to preselect control rods for the SCRRI function. The preselected control rods for the SCRRI function are stored in memory in the RCIS circuitry.

The initiation of the SCRRI function controls the stability concern region based on the power level and the core flow level. Since no single failure in any trip logic, including RPT logic, can cause more than one reactor internal pump (RIP) to trip, the probability of initiating the SCRRI logic is very low.

For further protection, a scram trip based on core flow coastdown rate is implemented. Currently, a setpoint is chosen such that a simultaneously trip of more than 5 RIPs with the initial power higher than about 80% of rated power would initiate an automatic scram trip. Therefore, operation in Region III is highly unlikely.

In addition, a control rod withdrawal block is also implemented as shown in Figure 20.3.7-1to prevent the plant operation in Region III during startup. The operator can clear this block only by increasing the core flow.

In summary, the ABWR design assures stable operation in the normal operating domain. Automatic logic is also provided to prevent the plant operation in the region with the least stability margins. Therefore, the ABWR design meets the stability design and licensing criteria.

ABWR Features which Preclude LaSalle-Type Event Initiators—A question has arisen whether the LaSalle type of event could occur in the ABWR design. Specifically, could a single failure in one reference leg, cause the plant to initiate trips or take control action based on false water level indications? The answer is no, this type of event is not possible in the ABWR design because of the two-out-of-four (2/4) trip logic adopted in ABWR for all water level related trips, and the use of triplicated water level signals for use in control algorithms.

The design of the water level trip logic at LaSalle is such that the actuation of a single pressure switch can cause the trip to occur. This is complicated by the fact that a common reference leg is used for both of the ATWS recirculation pump trip switches (i.e., the pressure switch that causes pump A to trip uses the same reference leg as the pressure switch that causes pump B to trip). Therefore, the single failure in one reference leg caused both recirculation pumps to trip. The feedwater control system responded to the false level indication, because it derives its water level signal from a single sensor on the same reference leg also.

The ABWR design precludes this type of event by ensuring that all water level related trips and control signals are derived from multiple sensors using different reference legs. The feedwater control system controls level based on a reactor water level signal which is derived from three different transmitters using three different reference legs. The middle value of the three signals is used in the control algorithm. Therefore, if one reference leg fails, causing an erroneous level signal, it will have no effect on the control process, because the controller will be using other signals. Similarly, the recirculation pump trip logic on low reactor water level is derived from four different level transmitters using four different reference legs. The trip occurs only if two of the four signals indicate low level. Therefore, the failure of one reference leg cannot cause the recirculation pump trip to occur.

The type of event which occurred at LaSalle cannot occur with the ABWR design.

Specific Response to Question 100.1—

(1) The relationship between various stability modes in terms of conventional core and hot channel decay ratios is shown in Figure 20.3.7-2. Regional oscillations are possible only when both core and hot channel decay ratios are high and close to the limit of 1.0. For ABWR design, the hot channel decay ratio is reduced by incorporating small inlet orifices, whose loss coefficient is about double of that for ABWR/5/6s, and wider control rod pitch. The hot channel decay ratio is less than 0.45 even with a very bottom-peaked axial power shape (e.g., 2.0 peaked at node 3) at the intercept of minimum pump speed line and the 102% rod line (Point 1 of Figure 4.4-1). Therefore, regional oscillations are not very likely to occur in ABWR.

(2) The design target for ABWR is to have a calculated core decay ratio less than or equal to 0.8, taking into consideration model uncertainties, future core design and possible operating modes with at least 9 RIPs in operation. This design target is achieved by incorporating smaller inlet orifices, wider control rod pitch and more steam separators. These design changes result in less negative void reactivity coefficients for both initial core and reload cores and consequently enhance both core and channel stability. The calculated core decay ratio for current ABWR core design is less than 0.7 in the equilibrium cycle. The core decay ratio is estimated to be less than 0.8 for future core design. (The procedure used here is similar to that used for LaSalle post-event analysis, which calculated core decay ratio of 1.05 at the conditions of oscillations.)

(3) As discussed above, normal plant operation with all RIPs in operation, or even with one RIP out of service, is stable in the whole operating region. With more than one RIP out of service, the plant operation is automatically limited to be outside the SCRRI region by the SCRRI and rod block logics, and therefore the operation is stable. During transients, the reactor stays in the stable region if a reactor scram is immediately initiated during the event. Hence, the only transient which may lead the reactor into the SCRRI region, is a trip of two or more RIPs. In this case, the SCRRI logic is automatically initiated to prevent the plant from staying in the least stable region. Therefore, stable plant operation is assured during normal and abnormal operations.

(4) The selected control rod run-in (SCRRI) is automatically initiated when a trip of two or more RIPs occurs in which the plant enters the least stable region (see the setpoints in Figure 20.3.7-1). The preselected control rods are commanded to be inserted electrically with the normal speed. It takes about 2 minutes to insert these rods to the full-in position if these rods are in the full-out position. However, plant experience shows that an insertion of a few notches is sufficient to bring the plant to a stable condition when oscillations occur. Therefore, the effectiveness of the SCRRI initiation will start in a few seconds. The boundaries of operation are changeable.

Nonetheless, changes in setpoints are very unlikely since the ABWR stability design already takes all operating modes, conditions, and future core design into consideration.

(5) As described under "General ABWR Design" above, a new design is added to provide displays of regional and core-wide neutron flux time histories (i.e., APRM/LPRM histories) to enable the operator to detect any neutron flux oscillations.

(6) The ABWR stability design takes all operating modes, operating conditions and future core design into consideration as discussed above. Therefore, frequent mapping of boundaries of operational map is not necessary and is not needed.

References for Response 100.1—

20.3.7-1 NEDE-24011-P-A, "General Electric Standard Application for Reactor Fuel"

20.3.7-2 NEDE-22277-P-1, "Compliance of the General Electric Boiling Water Reactor Fuel Design to Stability Licensing Criteria," October, 1984

20.3.7-3 Letter, C.O. Thomas (NRC) to H.C. Pfefferlen (GE), "Acceptance for Referencing of Licensing Topical Report NEDE-24011, Rev. 6, Amendment 8, Thermal Hydraulic Stability Amendment of GESTARII," April 24, 1985.

Question 281.11

In Subsection 9.1.3.1.1, conductivity units of umhos/cm are used while in Subsection 9.2.9.1 units of uS/cm are used. These units should be consistent (9.1.3)

Response 281.11

Subsection 9.1.3.2 has been revised for consistency.

Question 281.12

In Subsection 9.1.2.1.1, the pH range of 5.6 to 8.6 should be at 25°C. (9.1.3)

Response 281.12

"At 25°C" has been added to the pH range in Subsection 9.1.3.2.

Question 281.13

Table 11.1-4 indicates that the N-16 concentration in the steam is four times the normal value when hydrogen water chemistry (HWC) is used. HWC tests conducted at BWRs have indicated that N-16 activities have increased in the range of 1.1 to 5 times the N-16 concentrations observed during normal water chemistry operations. What is the basis of the factor of four increase for the ABWR? Is it based on the model for predicting HWC that was reported in "U.S. Experience with Hydrogen Water Chemistry for Boiling Water Reactors," R.L. Cowan, C.P. Ruiz and J.L. Simpson, April 1988? (11.1)

Response 281.13

A value of 7.4 MBq/gm was given in Table 11.1-4 for the N-16 concentration (actually the N-16 equivalent of the combined N-16 and C-15 concentrations) in steam which is applicable to operation with hydrogen water chemistry. This was a current best estimate. It was obtained by determining the nominal N-16 source concentration which was necessary to reconcile the observed increase by a factor of 5 in the dose rate at the Dresden 2 main steamline radiation monitor during operation with hydrogen water chemistry and incorporating an additional factor for conservatism. The increase in main steamline monitor dose rate at Dresden 2 was at the upper bound of increases observed at the plants which have operated with hydrogen water chemistry. This value is under continuing review and may be adjusted as more definitive data becomes available. It is anticipated that further refinement of the number would not be expected to result in an increase of more than about 15% in the source term. (11.1)

Question 281.14

In Subsection 11.5.2.1.1, there is no discussion of a dual setpoint for the main steam radiation monitors (MSLRMs) when HWC is used. Below 20% power, the MSLRM setpoint is established to detect high radiation levels in the main steamlines and provide signals for reactor scram and MSIV closure to reduce the release of fission products to the environment in the event of a control rod drop accident. When hydrogen is injected into the feedwater at power levels above 20%, the MSLRMs may have to be reset due to the increased N-16 activity in the main steamline. (11.5.2)

Response 281.14

The dual setpoint methodology for the main steamline radiation monitor (MSLRM), when utilizing hydrogen water chemistry (HWC), is one of several ways to address the increase in N-16. An alternative approach, such as that proposed by Susquehanna Steam Electric Station, and accepted by the NRC (Docket No. 50-387), was to demonstrate that an increase in the trip setpoint would not mask the fission product release associated with a gross fuel failure. Thus, by raising the trip setpoint a considered amount, the need for a dual setpoint can be avoided. Additionally, it should be noted, that the MSLRM high trip setpoint is not considered in any accident analysis for the ABWR.

Question 410.31

Identify, in detail, the principal equipment that comprise the spent fuel pool cooling and cleanup system. Be specific to define its boundaries and safety-related portions. (9.1.3)

Response 410.31

The fuel pool cooling and cleanup system consists of two circulating pumps, two heat exchangers, two filter demineralizers, two skimmer surge tanks, piping, valves, controls and instrumentation. The classification of the fuel pool cooling and cleanup system discussed in the response to Question 210.17 and Table 3.2-1.

Question 410.32
Explain why, for the ABWR, two 50% rated spent fuel pool cooling trains are considered as sufficient (Note that for some of the operating BWRs, two 100% rated spent fuel pool cooling trains have been provided). (9.1.3)

Response 410.32
ABWR fuel pool cooling heat exchangers are sized to handle only normal heat load which is defined as the heat from the spent fuel stored in the fuel pool when the pool gate is closed at 21 days after the control rods are inserted.

The maximum heat load operation is when more than the normal refueling batches are drawn out from the reactor in the pool. Since decay heat in this mode exceeds the heat exchanger capacity, pool water shall be cooled by also using one of the loops of the residual heat removal (RHR) system.

Question 410.33
Explain why, for the ABWR, the minimum capacity of the spent fuel pool for storage of the spent fuel is only 270% of a full core. (9.1.3)

Response 410.33
The top level plant requirement for spent fuel storage is a minimum of 270%.

Question 410.34
In the design bases for the Fuel Pool Cooling and Cleanup System (FPCS), include the requirements for makeup water and radiation shielding. Provide appropriate discussion regarding the design compliance with Regulatory Position C.8 of Regulatory Guide 1.13 and Regulatory Positions C.2.f(2) and C.2.f(3) of Regulatory Guide 8.8. (9.1.3)

Response 410.34
Makeup water—Fuel pool cooling and cleanup system prevents excess radiation to plant personnel by maintaining a minimum water level over the spent fuel. Makeup water lines are provided to guard against evaporation, leakage and any loss during a seismic event. Piping from condensate makeup water system to the fuel pool surge tank provides normal makeup. Seismic makeup from the RHR system provides makeup on loss of the normal makeup water. As required, fire hoses may be used to replenish water inventory. The suppression pool cleanup (SPCU) system may also be used to add water into the fuel pool. Shielding and maintenance of spent fuel pool water level is addressed in 9.3.1(3).

Compliance with Regulatory Guide 1.13 Position C.8—The reactor building crane used for handling heavy objects over the fuel storage pool is designed to an appropriate quality. The crane is designed so that no single component failure (mechanical or electrical) will permit dropping or other uncontrolled hoisting or lowering of the load. An inspection program is required to assure continued integrity of items such as cables, load blocks, and drums. In addition, the Reactor Building crane is interlocked to prevent handling heavy loads over the fuel

pool. Subsection 9.1.5 provides additional description of the overhead heavy load handling systems.

New-fuel storage vault for storing about 40% core load of new fuel assemblies is located as close as practical to the fuel pool work area to facilitate fuel handling. However, the vault location is checked to assure that the vault is not in the transport path of any large objects whose drop could cause penetration of the vault and damage the fuel.

Compliance with Regulatory Guide 8.8 Positions C.2 f(2) and C.2 f(3)—Radiation exposure during maintenance and inspection is taken into account in the arrangement of the piping, FPC pumps, heat exchangers, and filter demineralizers. The FPC pumps, heat exchangers and filter demineralizers are located in separately shielded rooms. Each shielded room is arranged so as to be able to perform service as quickly as possible. Adequate space is provided such that temporary shielding may be erected if required to reduce personnel exposure during maintenance.

The piping and valves are arranged so that individual components can be isolated and serviced independently of other equipment. Lines are sloped to vent and drain freely to prevent accumulation of radioactive contaminants.

Before dismantling any equipment which normally holds or conducts radioactive water, the equipment will be flushed through connections shown on the P&ID to reduce radiation. Drains are piped to the radwaste system.

Question 410.35

Discuss the extent of the system's compliance with Regulatory Positions (9.1.3) C.1, C.2, and C.6 of Regulatory Guide 1.13, Regulatory Positions C.1 and C.2 of Regulatory Guide 1.29, and address the Quality Group requirements for the system in accordance with Regulatory Guide 1.26.

Response 410.35

Compliance with Regulatory Guide 1.13 Positions C.1, C.2, and C.6—The fuel pool cooling and cleanup system facility is located in the Seismic Category I reactor building. The reactor building is designed to withstand and protect equipment from tornadoes, missiles and other natural phenomena.

The fuel assembly drop accident is discussed in Subsection 15.7.4. In Subsection 15.7.4, the event assumed is the drop of a fuel assembly into the open RPV. This event bounds any drop accident over the spent fuel pool storage rack. Should a dry-loaded cask be filled with water, appropriate measures to control "vent gas" will be provided. Note that fuel brought into the plant comes in crates.

There are no piping connections which penetrate the fuel pool liner to the fuel storage pool below the bottom of the fuel transfer canal.

Fuel pool cooling system is designed such that no single failure or malfunction or misoperation of the active components will uncover the stored fuel or exceed the maximum pool temperature.

The fuel pool clean up system portion (filter demineralizer) of the fuel pool cooling system is designed to be isolated during seismic event or LOCA such that pool cooling can be accomplished.

Compliance with Regulatory Guide 1.26—The fuel pool cooling system is a Seismic Category I, Quality Group Class C design.

Compliance with Regulatory Guide 1.29 Positions C.1, and C.2—In accordance with Acceptance Criterion II.1.a of SRP Section 9.1.3, a Seismic Category I spent fuel pool makeup water source is provided from the suppression pool through the residual heat removal (RHR) system and then through a portion of fuel pool cooling and cleanup (FPC) system to which the RHR system connects. The suppression pool, the RHR system and the portion of the FPC system tat provides the makeup water flow path to the spent fuel storage pool are safety-related and Seismic Category I. The seismic Category I portion of the FPC system can be isolated, assuming a single active failure, from the non-safety-related, non-Seismic Category I portions of the FPC system and from the non-safety-related Category I suppression poll cleanup system.

Question 410.36

With respect to the cooling capacity of the system, demonstrate that on the bases of conservative assumptions relative to Branch Technical Position 9-2, “Residual Decay Energy for Light Water Reactors for Long Term Cooling,” and SRP 9.1.3 III.1.h, the total capacity of the heat exchangers with both pumps operating exceeds the maximum normal heat load, and that the fuel pool temperature can be maintained below the 140°F criterion, specified in SRP Section 9.1.3 for maximum normal conditions. Also, confirm that 140°F will not be exceeded if a single active failure and loss of offsite power is assumed. Describe the redundancy provisions in powering the two cooling pump motors. (9.1.3)

Response 410.36

The sizing basis of the fuel pool cooling heat exchangers is the removal of decay heat 21 days after shutdown. This 21 days reflects the time at which the gate between the spent fuel pool and the reactor well could be closed. The capacity of the spent fuel pool for the ABWR has been established as 270% of a core. The 270% includes 170% consisting of previous 35% refueling batches and 100% reflecting a potential complete defueling of the reactor vessel.

The fuel pool cooling heat exchangers are sized to remove the normal maximum heat load of 170% of a core. Should the reactor be defueled, the RHR system can be valved in to provide additional heat removal.

The May-Witt model with finite irradiation time with 10% margin is used to determine the loading on the heat exchangers. With the given inputs, 13.06 GJ/h at 21 days after rods in is used to size the fuel pool cooling heat exchangers. GE calculation using the method described

in BTP ASB 9-2 results in a decay heat of 12.39 GJ/h which is less conservative than that used for actual design. This BTP ASB 9-2 model calculation includes an uncertainty factor of 0.1 (margin=10%) as recommended in SRP 9.1.3 III.l.h.i.

If a single active failure occurs which results in a loss of one loop of fuel pool cooling, RHR can be used as necessary to limit the fuel pool temperature to below 60°C.

Question 410.37

Describe the emergency makeup water systems provided, and discuss redundancy and seismic requirements for the system. (9.1.3)

Response 410.37

The residual heat removal (RHR) system provides a Seismic Category I makeup water to the fuel pool following a seismic event. Water is drawn from the suppression pool and routed to the fuel pool via a Seismic Category I portion of the fuel pool cooling and cleanup (FPC) system. This portion of the FPC system can be acceptably isolated, assuming the presence of a single active failure, from the remaining portions of the system. Fire hoses are also available as backup makeup water.

Question 410.38

Discuss control-room-alarmed fuel pool water temperature, fuel pool water level and building radiation level monitoring systems provided to satisfy GDC 63. (9.1.3)

Response 410.38

Water level switch is provided to monitor the fuel pool water level. As shown on the FPCS P&ID, annunciators for high and low level are provided in the main control room.

Fuel pool, FPC pump suction and heat exchanger outlet temperatures are monitored and recorded.

Area radiation monitoring system monitors radioactivity in the fuel storage and handling areas (operating floor). Information is displayed, recorded and indicated in the main control room. High radioactivity level will initiate an alarm in the main control room.

Question 410.39

Discuss provisions for, or provide descriptions of, the following design features: (1) leakage detection system, (2) individual isolation capabilities for components and headers to assure system leakage control and maintenance, (3) capability to detect radioactivity and/or chemical contamination transfer from one system to another, and (4) protection of the various components of the fuel pool cooling system against failures of other applicable moderate and high-energy piping systems. (9.1.3)

Response 410.39

(1) Leakage detection for fuel pool cooling system is provided at the refueling bellows assembly; drywell to reactor well seal; and through the fuel pool reactor well and the dryer-separator pool liners. High flow will alarm in the main control room.

(2) Fuel pool cooling system is designed such that individual equipment can be isolated in case of single failure or maintenance. Cross-tie lines with isolation valves are provided at the suction and discharge lines of the two parallel FPC pumps. The heat exchangers are also arranged in parallel such that one can be placed out of service while the other in operation. This allows the system to be operated with one loop regardless which pump and heat exchanger are being used.

(3) Fuel pool cooling system is designed such that barriers, restraints, equipment compartments and the like protect fuel pool cooling components against failure of high energy pipings systems.

Question 410.40

A complete evaluation of the Overhead Heavy Load Handling System (OHLHS) cannot be performed without the descriptions of the new and spent fuel storage facilities to be provided in Subsections 9.1.1 and 9.1.2 of the ABWR SSAR. Also, Subsection 9.1.4 “Light Load Handling System” is needed, as it is extensively referenced in 9.1.5. All these Subsections, 9.1.1, 9.1.2, and 9.1.4, are scheduled to be submitted to the NRC in December, 1988. Note that on completion of review of the above sections, additional information on Subsection 9.1.5 may be requested. (9.1.5)

Response 410.40

See Subsections 9.1.1, 9.1.2, and 9.1.4.

Question 410.41

Provide the seismic category, safety class, and quality group for all components used in the OHLHS and discuss the system design in terms of conformance with the regulatory positions of Regulatory Guides 1.13 and 1.29. Discuss the system design in terms of conformance with the guidelines of NUREGs-0554 and 0612 as they relate to protection against natural phenomena. (9.1.5)

Response 410.41

Table 3.2-1 has been revised to contain all components in the OHLHS system. Conformance to NUREG-0554 and NUREG-0612, including a discussion on conformance to the regulatory guides was provided on Amendment 7 under Subsection 9.1.5.

Question 410.42

Identify all the individual heavy load handling systems (names and hoist trolleys) that have been designed to meet the single-failure-proof requirements in accordance with the guidelines

of NUREG-0554. Identify the safety factors provided for slings and strongbacks. Also provide the results of a failure mode and effects analysis demonstration that the individual subsystems and components including controls and interlocks are designed to meet the single-failure criterion without compromising the capability of the OHLHS to perform its safety function. (9.1.5)

Response 410.42

Response to this question is provided in new Table 9.1-10 and revised Subsection 9.1.5.2.9.

Question 410.43

Discuss compliance with GDC 4, "Environment and Missile Design Bases" and GDC 61, "Fuel Storage and Handling and Radioactivity Control" as it relates to handling the spent fuel cask. (9.1.5)

Response 410.43

The fuel storage pool is inside a tornado and missile protected building (reactor building). No additional protection from externally generated missiles needs to be provided. Internally generated missiles, such as crane load drop, are protected by electrical interlocks and single-failure-proof cranes and hoists.

The following safeguards have been incorporated into the reactor building crane for working with heavy loads.

(1) While carrying heavy loads, such as spent fuel cask, the reactor building crane is prohibited from moving the heavy load over the spent fuel portion of the spent fuel pool.

(2) The spent fuel cask pool is separate from the spent fuel storage pool by a water tight gate.

(3) Only the spent fuel cask is carried over the spent fuel pool. The cask is carried over the cask pit portion of the spent fuel pool.

Question 410.44

Provide P&IDs for the Condensate Storage Facilities and Distribution System (i.e., Makeup Water Condensate (MUWC) System). Also, provide a list of tanks (with capacity) and other requirements in the system. (9.2.9)

Response 410.44

The MUWC P&ID is provided as Figure 9.2-4. The only tank in this system is the condensate storage tank which has a capacity of approximately 2.120E+06 L. This tank is located outdoors adjacent to the turbine building. The other requirements of this system are provided in Subsection 9.2.9.

Question 410.45
Clarify which portion of the MUWC system is within the ABWR scope. Also, identify the system interfaces which include flow rates, supply pressure and temperature. (9.2.9)

Response 410.45
All of the MUWC system is within the ABWR scope.

Question 410.46
Clarify whether the distribution system includes any surge volume and, if so, how much and for suction of which pumps. Also, if applicable, describe how protection against the effects of flooding resulting from possible failure of the surge volume is ensured. Define what "HPCF pumps" means. (9.2.9)

Response 410.46
The surge volume of the system is within the condensate storage tank (CST). The capacity requirements of the CST are in Table 9.2-3. Section 3.4 demonstrates that failure of the CST will not lead to unacceptable results. "HPCF pumps" means the high pressure core flooder pumps.

Question 410.47
Describe the design features provided in the system and/or interfacing components to ensure automatic switchover of the suction of the applicable pumps to safety-related water sources, if so required. (9.2.9)

Response 410.47
Level sensing elements and transmitters are provided for the condensate storage tank (CST). Signals are sent to the HPCF, RCIC and SPCU pumps to provide automatic switchover to the suppression pool when sufficient water is not available in the CST.

Question 410.48
Discuss conformance of the MUWC systems design with the requirements 10CFR 50.63, "Loss of all Alternating Current Power." Specifically include the system's capacity and capability to ensure core cooling by removing decay heat independent of preferred and onsite emergency AC power in the event of a station blackout for the specified duration, in accordance with guidelines of Regulatory Guide 1.55, "Station Blackout," Positions C.3.2 through C.3.5, as applicable. (9.2.9)

Response 410.48
The condensate storage tank (CST) is designed to provide approximately 5.678E+05 L of water for use during station blackout. Other consumers of condensate are switched to other water sources so that this volume of water is always available during power operation. This volume of water is sufficient for operation of the RCIC system to remove decay heat during the first eight hours of station blackout.

Question 410.49
Discuss compliance of the system with Positions C1 and C2 of Regulatory Guide 1.29. (9.2.9)

Response 410.49
The normal secured source of water for decay heat removal is the suppression pool. The condensate storage tank (CST) is used in preference to the suppression pool because the water quality is normally better. As a result the CST is not required to be Seismic Category I.

Question 410.50
Provide P&IDs for the Demineralized Water Makeup System (i.e., Makeup Water System (Purified) (MUWP)). (9.2.10)

Response 410.50
The MUWP P&ID is provided as Figure 9.2-5.

Question 410.51
Clarify which portion of the MUWP is within the ABWR scope. Also, identify the system interfaces which include temperature, chemistry, system capacity (i.e., tank volume) and treatment. (9.2.10)

Response 410.51
See response to Question 410.52.

Question 410.52
Provide the water quality characteristics for the MUWP water (SSAR Subsection 9.2.10.1, Item 3, refers to Subsection 9.2.8 which in turn refers to Subsection 9.2.16. However, Subsection 9.2.16 does not give the water quality characteristics). (9.2.10)

Response 410.52
The response to this question is provided in new Table 9.2-2a.

Question 410.53
Discuss compliance of the system with Position C1 (e.g., containment penetration portions) and Position C2 of Regulatory Guide 1.29. (9.2.10)

Response 410.53
The MUWP line which enters primary containment has a locked closed manual valve outside of containment and a check valve inside of containment. The containment penetration is Seismic Category I and Quality Group B. (9.2.10)

Question 410.54
Verify that flooding analyses have been performed for a failure of the nonseismic Category I demineralized water makeup system where the piping runs through safety-related structures and tunnels containing safety-related equipment. (9.2.10)

Response 410.54

Section 3.4 studies of MUWP piping run failures through safety-related structures and tunnels containing safety-related equipment have shown that flooding will not have an adverse effect on these structures and equipment.

Question 410.55

With respect to the capability of the Reactor Building Cooling Water System for detection, control, and isolation of system leakage, and radioactive leakage: (9.2.11)

(1) Identify the isolation valves which isolate the non-essential loads from the essential supply headers and describe their isolation function in the event of a LOCA or in the event of a leak detected in the non-essential system piping.

(2) Identify and describe instrumentation used to detect leakage in the non-essential system piping.

(3) Identify the valves which are activated by the surge tank level switch to isolate a leaking system train.

(4) Identify all radiation monitors provided and describe their individual function. Also, clarify whether the system design includes any radiation monitor in the pump suction header to detect inleakage from radioactive systems.

Response 410.55

(1) In the event of a LOCA signal, valves F075, F080, F081, F101 and F141 shall close. If a pipe break occurs in the non-essential portion of the piping, valves F072, F074 and F082 shall be closed. These three valves are not directly closed by a LOCA signal. The operator may close these valves if desired.

(2) Leakage in the entire system can be detected by level monitors in the surge tank. To determine if the leakage is in the non-essential portion of the system, valve F082 is closed and the flow is monitored using F1642. If flow continues, this indicates that a leak is present. Then, valves F072 and F074 are closed.

(3) Valves F072 and F082 are closed by surge tank level switches.

(4) The radiation monitor is located after the RCW pumps and heat exchangers in each division. If detectable radioactivity is observed, grab samples will be obtained from sampling lines downstream of each heat exchanger cooling highly radioactive water.

Question 410.56

Identify the functional performance requirements associated with water hammer and address the design provisions and procedures provided to meet these requirements. (9.2.11)

Response 410.56
One of the functions of the surge tank is to provide adequate pressure for pump suction. Additionally, each isolatable portion of the system is provided with high point vents. The safety-related portions of the system are isolated by closing only one valve. Thus, these portions remain pressurized during normal operation. The operational procedures will require that isolated systems be filled and vented before being placed in operation to avoid water hammer.

Question 410.57
Identify the system requirements for water makeup, and address the capacity of the surge tanks to accommodate expected leakage from the system or that a seismic source of makeup water can be made available within a time frame consistent with surge tank capacity. (9.2.11)

Response 410.57
The surge tanks are sized to operate for thirty days without makeup at allowable leakage rates. During this period, adequate makeup water can be made available.

Question 410.58
Provide the design characteristics for the system pumps, tanks and heat exchangers. (9.2.11)

Response 410.58
The response to this question is provided in revised Subsection 9.2.11.2 and new Table 9.2-4d.

Question 410.59
Define the terms: FCS, CAMS, LWC, HSCR, HWH hot water heat exchanger, and HCW. (9.2.11)

Response 410.59
FCS = Flammability Control System

CAMS = Containment Atmospheric Monitoring System

LCW = Low Conductivity Waste

HSCR = Heating Steam Condensate Receiver

HWH hot water heat exchanger = Hot Water Heating System

HCW = High Conductivity Waste

Question 410.60
Discuss how the Reactor Building Cooling Water (RCW) system complies with Position C2 of Regulatory Guide 1.29 with respect to the non-safety-related portions, and with respect to GDC 2 for safety-related portions (e.g. physical location to protect against earthquakes and floods). (9.2.11)

Response 410.60
The safety-related portion of the RCW system is Seismic Category I up to and including the valves which isolate it from the non-safety-related portion of the RCW system. The RCW system meets the GDC 2 requirements as discussed in Subsection 3.1.2.1.2.2.

Question 410.61
Clarify whether the flows indicated for the components serviced by the RCW system in SSAR Tables 9.2-4a, 4b and 4c represent the minimum flow requirements at the inlet of each component. Also, specify the maximum allowable RCW temperature at the inlet of each component under different operating conditions. (9.2.11)

Response 410.61
The flows in Tables 9.2-4a, 4b and 4c are design values which include an allowance for instrument error. The design temperatures at the inlet of each component under different operating conditions are provided in Figure 9.2-1aa.

Question 410.62
Clarify whether availability of only one division of the RCW system is sufficient to provide cooling water to the drywell coolers and the RIP coolers (SSAR Tables 9.2-4a and 4b list only Division A and B servicing above. Further Table 9.2-4b lists only the Drywell B cooler as being serviced by Division B). (9.2.11)

Response 410.62
The availability of only one division of RCW system is sufficient to provide cooling water to the drywell coolers. Studies have shown that the increase in drywell temperature will not be sufficient to require shutdown of the plant. Division A of RCW system cools drywell coolers A and C and five of the RIP coolers. Division B of RCW system cools drywell cooler B and the other five RIP coolers. Revised P&IDs (Figure 9.2-1) for the system have been provided.

Question 410.63
Regarding the HVAC Normal Chilled Cooling Water System, provide information on the following: (9.2.11)

(1) Compliance with GDC 2 for safety-related components (i.e., physical location for complying with the GDC).

(2) Compliance with Position C2 of Regulatory Guide 1.29 for the non-safety-related portion.

(3) Automatic features to provide cooling water to the equipment serviced by the system in the event of its failure on loss of offsite power (specify the system that will provide cooling water in the above situation).

(4) Description of the turbine building cooling water system which provides condenser cooling (refer to SSAR Subsection 9.2.12.2) if it is within the ABWR scope. Otherwise, identify it as an interface requirement.

Response 410.63

(1) The HVAC normal chilled cooling water (HNCW) system meets the GDC 2 requirements as discussed in Subsection 3.1.2.1.2.2.

(2) The HNCW system is non-safety-related. Failure of this system to provide cooling water will not adversely affect any safety-related equipment.

(3) During loss of offsite power, cooling water will not be provided to the equipment serviced by the HNCW system.

(4) The description of the turbine building cooling water system is provided in new Subsection 9.2.14.

Question 410.64

Regarding the HVAC Emergency Chilled Cooling Water system, provide information on the following: (9.2.13)

(1) Compliance with GDC 2 for safety-related portion (i.e., physical location for complying with the GDC).

(2) Compliance with Position C2 of Regulatory Guide 1.29 for the non-safety-related portion, if there is any such portion.

(3) Compliance with GDC 4.

(4) System active component failure analysis.

Response 410.64

(1) The HVAC emergency cooling water (HECW system meets the GDC 2 requirements as discussed in Subsection 3.1.2.1.2.2.

(2) There are no non-safety-related portions of the HECW system.

(3) The HECW system meets the GDC 4 requirements as discussed in Subsection 3.1.2.1.4.2.

(4) See new Table 9.2-10.

Question 460.1

With respect to radioactive source terms and the calculations of subsequent release to the environment, discuss your position in terms of the regulatory guidance provided in NUREG-0800, SRP 11.1, such as NUREG-0016, "Calculation of Releases of Radioactive Materials in Gaseous and Liquid Effluents from Boiling Water Reactors," Revision 1 and Regulatory Guide 1.112, "Calculation of Release of Radioactive materials in Gaseous and Liquid Effluent from Light-Water-Cooled Power Reactors." (11.1)

Response 460.1

NUREG-0800, Section 11.1 and Regulatory Guide 1.112 identify the BWR-GALE computer code as an acceptable method of calculating releases of radioactive materials for demonstration of compliance with applicable regulatory requirements. GE does not use the BWR-GALE computer code per se; however, the methods and assumptions embodied in the code are used to evaluate expected releases in gaseous and liquid effluents except in those specific instances where alternate parameters or models are regarded as more appropriate.

Question 460.2

Clarify whether the radioactive source terms given in ABWR SSAR Tables 11.1-1 through 11.1-5 have been adjusted to the maximum core thermal power of the ABWR evaluated for safety consideration in the SSAR. (11.1)

Response 460.2

The data contained in Tables 11.1-1 through 11.1-5 are design basis source terms for use in plant design. As such they are not predicted source terms at a specified power level. These are intended to be conservative source terms chosen to provide substantial margin relative to expected average source terms for long-term operation at rated power. These tables have been revised in their entirety. The revised tables contain radionuclide mixes derived from the American National Standard Radioactive Source Term for Normal Operation of Light Water Reactors (ANSI/ANS-18.1-1984). The bases for the new tables include normalization of the magnitudes of the noble gas release rates to a total of 3.7 GBq/s as evaluated at 30 minutes decay and normalization of the magnitudes of reactor water radioiodine concentrations based on an I-131 release rate from the fuel of 25.9 MBq/s.

Question 460.3

Check and correct as appropriate the following: (11.1).

(1) Caption for Column 3 of SSAR Table 11.1-1.

(2) Kr-87 value are given in Column 4 of SSAR Table 11.1-1.

(3) N-16 steam and reactor water concentrations given in SSAR Table 11.1-4.

Response 460.3

The two items noted in Table 11.1-1 have been corrected. As indicated in response to Question 460.2, Table 11.1-1 has been revised in its entirety.

Table 11.1-4 has similarly been revised in its entirety, and now contains a revised concentration of N-16 in reactor water.

Question 460.4

The staff requires the values of some parameters for performing an independent evaluation of the ABWR Reactor Coolant System (RCS) radioactive source terms. These are used in conjunction with radwaste management systems applicable for specific plants referencing the ABWR to determine the adequacy of the specific radwaste management systems (see NUREG-0016, Rev. 1 Chapter 4). Therefore, provide information on the following parameters or provisions: (11.1)

(1) Thermal Power (Mwt)

(2) Total steam flow rate (lb/hr)

(3) Mass of water in the RCS (lbs)

(4) Steam/water concentration ratio, i.e., reactor vessel carry over factor for halogens and particulates

(5) Main condenser tubing material of construction (stainless steel or copper)

(6) Powdex or deep bed condensate treatment

(7) Air ejector offgas holdup time (hr)

(8) Charcoal delay system for treating offgases:

   (a) Operating and dew point temperatures of the delay system

   (b) Mass of Charcoal (lbs)

   (c) Dynamic absorption coefficients (cm^3/g) for Kr, Xe and Ar

(9) Clean or radioactive steam for gland seal

(10) Mechanical vacuum pump iodine release fraction if within the ABWR scope

(11) Provisions incorporated to reduce radioactivity releases through the ventilation or exhaust systems that come within the ABWR scope (e.g., HEPA filters, charcoal adsorbers and their thickness)

(12) Release points characteristics (see NUREG-0016, Rev. 1, Chapter 4, Section 4.7, Item 4); include description of the main stack

Note that Item Nos. 5 and 6 are required to determine the carry over factor for radiohalogens from reactor water to steam. Also, note that when a summary of building ventilation system and mechanical vacuum pump releases are provided in December 1988 (see SSAR Subsection 12.3.3), additional information on the releases may be requested.

Response 460.4

Two new tables have been added to revised Section 11.1 to better describe the basis for the liquid and gaseous source term. The remaining items requested are provided in revised Sections 11.2 and 11.3.

Question 460.5

Regarding Process and effluent Radiological Monitoring and Sampling Systems: (11.5)

Question 460.5(1)

Provide locations of plant vent, radwaste building vent(s), offgas exhaust vent, turbine building vent and all other exhaust vents through which all radioactive gaseous or airborne effluents are discharged directly to the environment. Also, provide individual gaseous or airborne radioactive effluents (i.e., drywell purge, release via SGTS, release from RCIC, CUW and ECCS equipment rooms, release from shield wall annulus, fuel area, battery rooms, CRD maintenance area, release from any other secondary containment area not listed above, release from mechanical vacuum pump, radwaste building control room and unit substation, release of treated offgases, release from turbine building, and any other effluent not listed above) discharged through each one of the vents directly to the environment.

Response 460.5(1)

The gaseous exhausts from the reactor building, radwaste building, offgas exhaust vent, turbine building and other exhaust vents through which radioactive gaseous or airborne effluents are discharged to the environment are dumped into the main stack and monitored continuously.

Releases from shield wall annulus and auxiliary building are not applicable to ABWR design. RCIC, CUW and ECCS equipment rooms are combined into the reactor building. The gaseous exhaust from these rooms and SGTS etc. is dumped into the main stack and monitored.

Question 460.5(2)

Provide the locations of all the process monitors for radioactive gaseous or airborne effluents (i.e., containment HVAC radiation monitors, fuel area ventilation exhaust monitors, battery room and CRD maintenance area radiation monitors, shield wall annulus monitors, RCIC, CUW and ECCS equipment rooms radiation monitors, any other secondary containment area radiation monitors not listed above, radwaste building control room and unit substation radiation monitors, and any other process monitor not listed above). Include all the process radiation monitors not currently listed in SSAR Section 11 Tables (e.g., shield wall annulus

monitors, RCIC, CUW and ECCS equipment rooms monitors, other secondary containment area radiation monitors).

Response 460.5(2)

The locations of process monitors for radioactive gaseous or airborne effluents from various sources, number of channels and their types are listed in the revised
Table 11.5-1 and 11.5-2.

Question 460.5(3)

Clarify which areas process monitors other than the fuel area ventilation exhaust monitors will initiate the startup of SGTS on detection of high airborne radioactivity level in the area (e.g., ECCS/CUW/RCIC equipment rooms, shield wall annulus, primary containment purge).

Response 460.5(3)

Startup of SGTS on detection of high airborne radioactivity level will be initiated by:

(1) High reactor building ventilation system exhaust radioactivity

(2) High fuel area ventilation exhaust radioactivity

Question 460.5(4)

Clarify whether all gaseous or airborne radioactive effluents from the plant are monitored and which among them are continuously monitored.

Response 460.5(4)

Yes, all the gaseous or airborne radioactive effluents from the plant, which are discharged through the main stack, are monitored continuously.

Question 460.5(5)

SSAR Tables 11.5-1 and 11.5-2 refer to plant vent discharge and plant vent elevated discharge respectively. Clarify whether ABWR has two different plant discharge vents. If so, provide the location of the plant vent for elevated discharge and the radioactive gaseous or airborne effluent discharge via that vent.

Response 460.5(5)

The ABWR design has only one main discharge vent for the gaseous effluents from different sources which are combined together in the main stack.

Question 460.5(6)

Explain why ABWR design has only one channel for offgas post-treatment monitoring (see SSAR Table 11.5-1).

Response 460.5(6)

The ABWR design has two channels for offgas post-treatment monitoring which is renamed as “Offgas charcoal vault exhaust.” See revised SSAR Tables 11.5-1 and 11.5-2.

Question 460.5(7)
Discuss how ABWR design complies with the requirements of NUREG-0737, "Clarification of TMI Requirements," Item II.F.1, Attachments 1 and 2 with regard to monitoring instrumentation for noble gases and sampling and analysis of plant effluents for radioiodine, during accident conditions.

Response 460.5(7)
See Subsection 1A.2.15

Question 460.5(8)
Clarify how the detergent and chemical wastes releases are monitored.

Response 460.5(8)
Please refer to Section 11.2, Liquid waste management system, regarding detergent and chemical waste releases monitoring.

Question 460.5(9)
Clarify the references to service water effluent, essential service water system-RHR, and component cooling water system made in SSAR Section 11.5 and the associated tables (this question arises since the above nomenclatures have not been used for the ABWR water systems—see SSAR Section 9). Correct the entries in SSAR Section 11.5 and the Tables 11.5-1, 2 and 3 as appropriate.

Response 460.5(9)
The ABWR reactor building cooling water system combines the service water effluent, essential service water system—RHR and component cooling water system and is monitored by three channels. See revised Section 11.5 and Tables 11.5-1 through 11.5-3.

Question 460.5(10)
Clarify whether ABWR design requires two condensate storage tanks (see SSAR Table 11.5-4).

Response 460.5(10)
The ABWR design requires only one condensate storage tank. Table 11.5-4 has been revised accordingly.

Question 460.5(11)
Identify all the interface requirements (e.g., expected activities, alarms and trips for a number of monitors (see SSAR Table 11.5-2), monitoring mechanical vacuum pump and turbine building exhausts, minimum dilution required for liquid radwaste effluent).

Response 460.5(11)
The scope of the ABWR SSAR has been expanded to include the turbine island and the radwaste facility, therefore, there are no longer any interface requirements pertaining to the turbine building and radwaste building.

Question 471.1

Subsection 12.1.1.2 of the submittal states that operational policies are out of the Nuclear Island scope. Following Subsection 12.1.1.3, the report states that "Compliance of the Nuclear Island design with Title 10 of the code of Federal Regulations Part 20 (10CFR20), is ensured by the compliance of the design and operation of the facility within the guidelines of Regulatory Guides (RG) 8.8, 8.10, and 1.8." Further, Subsection 12.1.1.3.2 states that RG 8.10 is out of the Nuclear Island scope and Subsection 12.1.1.3.3 states that RG 1.8 is out of the Nuclear Island scope. The applicant should clarify these statements by describing to what degree the guidance in RG 8.8, 8.10, and 1.8 is incorporated into the ABWR design.

Response 471.1

Section 12.1 has been revised. Regulatory Guide 8.10 deals solely with operational aspects and personnel and is not related to the design activity. Therefore since the designer has no authority over the training and operation of the facility, Regulatory Guide 8.10 is out of scope for purposes of this submittal. Likewise Regulatory Guide 1.8 concerns the qualification and training of operating personnel and is beyond the authority of the designer and therefore out of scope for this submittal. The intent of Regulatory Guide 8.8 has been met, but those areas concerning actual operational management, training, and procedures have not been discussed as out of scope.

Question 471.2

Subsection 12.1.2.2.1 indicates that in lieu of specific instructions, design engineers were instructed to incorporate the applicable design criteria in RG 8.8. What mechanism in the design process ensured that all applicable criteria were considered in the individual design.

Response 471.2

To insure that the criteria of Regulatory Guide 8.8 were followed during the design of the ABWR, a continuing review and analysis of occupational exposure was conducted throughout all design phases of the ABWR. These reviews consisted of a team of engineers from GE and its technical associates who during each phase established projected maintenance times and exposures based upon experience with similar tasks and equipment from BWRs throughout the world. From these reviews recommendations were made for changes in location, shielding, equipment, and automation to reduce overall occupational exposure. The word all has been removed from Subsection 12.1.1.3.1 since it implies that the design activity has authority over administrative procedures which is clearly in the domain of operation policies.

Question 471.3

Subsection 12.1.2.2.2, Paragraph (4) states "Past experience has been factored into current designs. The steam relief valves have been redesigned as a result of inservice testing. Access for inservice inspection has been changed." State in what respect the access has been changed, and what is the impact of this change on occupational radiation exposure (ORE).

Response 471.3
The SRVs employed are direct action SRVs as opposed to pilot valve operated SRVs. The SRVs have been placed circumferential around the pressure vessel in an access hallway with dedicated hoist for removal. The overall reduction in occupational exposure on SRV maintenance (due to all factors including lower radiation due to recirculation removal and pipe placement) is estimated at slightly less than a factor of four.

Question 471.4
Subsection 12.1.2.3, paragraph (4), last sentence is not completed. It states: “These systems are designed to limit the radioactive.” Complete the sentence.

Response 471.4
The paragraph has been completed.

Question 471.5
Subsection 12.1.2.3 should address the reduction of personnel exposure due to the elimination of external primary coolant recirculation loops in ABWR design.

Response 471.5
Response to this question is provided in new Subsection 12.1.2.2.3(5).

Question 471.6
Subsection 12.1.2.3.2, paragraph (5) refers to “packaged units”. State whether or not this includes skid mounted components; if not, define what is meant by “packaged units”.

Response 471.6
Packaged units refer to pieces of equipment or components which can be removed as a single unit from areas of higher radiation to maintenance areas for reconditioning. A good example would be the reactor internal pumps which can be removed for maintenance. Such components need not be skid mounted.

Question 471.7
Subsection 12.1.2.3.2, paragraph (8) refers to providing means for decontamination of service areas; clarify the statement by providing examples of means of decontamination and of service areas referred to.

Response 471.7
Specific areas of the reactor building are allocated for equipment maintenance. Those areas are provided with radwaste drains and sumps so that they may be decontaminated after use. Such an area would be the control rod drive maintenance area.

Question 471.8
Table 12.2-3 part A, shows gamma ray sources in the core during operation (MeV/sec-W) for various energy bounds (MeV). Provide the basis for these data.

Response 471.8
Table 12.2-3A has been updated to provide A33VIR gamma sources in the core. These gamma sources are core average calculated from 2-dimensional RZ evaluations of a ABWR equilibrium core. These calculations were performed using the DOT 4.4 (Table-12.3-1) computer code with a 26 group neutron and 36 group photon production library based upon ENDF/B-IV data.

Question 471.9
Table 11.1-4, Coolant Activation Products in Reactor Water and Steam, indicates that values in steam for N-13, N-16 and N-17 should be multiplied by a factor of four when hydrogen water chemistry is used. Explain why the concentrations of these isotopes remain unaffected in reactor water when hydrogen water chemistry is used. State whether the effect of hydrogen water chemistry on the nitrogen activation product concentration (increase by a factor of four) was incorporated into the plant shielding design.

Response 471.9
The design basis reactor water concentration is based on normal water chemistry. The concentration is somewhat reduced during operation with hydrogen water chemistry due to the increased steam carryover; consequently, use of the concentration for normal water chemistry is conservative for this condition.

Plant shielding is being designed to accommodate the increased coolant activation product source concentration in steam associated with the use of hydrogen water chemistry.

Question 471.10
Address in Subsection 12.1.2.2.3 the selection of materials and instrumentation with respect to radiation exposure damage, frequency of maintenance, and ALARA personnel radiation exposure (i.e., reactor coolant pump component and material selection).

Response 471.10
A radiation environment envelope is included as part of the purchase specification for the pump. This specification details the environment which the pump must survive along with a frequency of maintenance schedule. Evaluation of radiation exposure for this type of recirculation pump was based primarily on European experience as well as maintenance practice.

Question 471.11
Provide drawings of cross sections R4 (0°-180°) and RD (90°-270°) of the ABWR reactor building for better orientation of radiation zones.

Response 471.11
These drawings are provided as Figures 12.3-1 through 12.3-24.

Question 471.12
In Table 11.1-1, Noble Radiogas Source Terms (Steam), (page 11.1-9) revise the description of first column: Source Term (t=30 min) to Source Term (t=0 min).

Response 471.12
The indicated column description was erroneous. As noted in the Response to Questions 460.2 and 460.3, Table 11.1-1 has been revised in its entirety.

Question 471.13
In accordance with Subsection 12.2.2 of RG 1.70, provide a description of radioactive sources in the spent fuel pool. This description should include the expected radioactive concentrations in the spent fuel pool water, as well as contained sources within the pool.

Response 471.13
Sources in the spent fuel pool consist of spent fuel bundles, exposed control rod blades, and the radioisotopic concentration in the water due to migration of material from exposed surfaces and microcrack leakages from the fuel rods. Of these three sources, the first two are determined by plant history and operating procedures. The third source is estimated at 1% of the normal reactor water concentration for long lined fission products as is provided in Tables 11.1-3, and 5. During normal operations, the fuel pool does not serve as a significant contribution to airborne activity since the pool is cooled and the ventilation system is designed to remove evolving material from the pool boundary layer. For accident cases, an upper limit design basis is given in Section 15.7.

Question 471.14
In accordance with RG 1.70, Subsection 12.2.2, Airborne Radioactive Material Sources, provide average expected annual airborne concentrations, at normal operating and anticipated operational occurrences, in various areas of the plant normally occupied by operating personnel.

Response 471.14
See response to Question 471.13

Question 471.15
Provide the expected N-16 source strength increase in steam leaving ABWR pressure vessel due to the elimination of the external reactor coolant loops in comparison to BWR plant with external coolant loops of the same power level. Provide the method of calculation.

Response 471.15
The N-16 source concentration in steam leaving the ABWR pressure vessel is not expected to increase relative to existing BWRs as a direct consequence of eliminating the external recirculation loops. This is consistent with a model in which the volatile portion of the N-16 produced in a single pass through the core is stripped out and carried from the vessel with the steam. The source term provided in the American National Standard Radioactive Source Term

for Normal Operation of Light Water Reactors (ANSI/ANS-18.1-1984) is taken to be applicable.

Question 471.16

Address TMI issues in accordance with NUREG-0737 as it relates to ABWR design Section 12.

Response 471.16

TMI action plan items are addressed in Appendix 1A.This includes the following pertaining to Chapter 12: II.B.2, II.F.1(1) and III.D.3.3(3).

Question 471.17

Provide the missing Table 12.2-1,A,B,C,D; Table 12.2-3,C; and Table 12.2-4,B: Tables 12.2-5 through Tables 12.2-21; Subsection 12.3.3; Subsection 12.3.4; Table 12.3-3; Figures 12.3-8 through 12.3-23; and Section 12.4.

Response 471.17

All of the information has been provided.

Question 471.18

Describe the radiological impact of each of the advanced design features of the ABWR design. Show how ALARA considerations were engineered into these features by describing the source term, reliability, maintenance and surveillance associated with these components. Features discussed should include, but not be limited to, the internal reactor circulating pumps, the control rod drive mechanisms, hydrogen water chemistry and reactor vessel bottom head design.

Response 471.18

The ABWR employs a number of advanced features designed to improve plant operation and reduce operator exposure. The discussion below highlights those features which reduce exposure.

(1) **MSIV** maintenance is expected to be reduced by use of MSIV overhauling device, use of main steamline plugs, automatic MSIV lapping system, elimination of the external recirculation piping, and RHR return through the feedwater system. Use of automated systems will result in overall reduction in maintenance times of 40%. Removal of recirculation lines will reduce this contribution to zero while it is estimated that the average field will be 40 μGy/h for this activity.

(2) **SRV** maintenance will primarily be affected by better access to SRVs and a reduction in the radiation field by elimination of the recirculation piping. Improved access has not been accounted for in this estimate with the radiation field estimated at 55 μGy/h.

(3) **CRD** maintenance will be significantly reduced with an assumed maintenance schedule of 2 drive and spool pieces overhauled per year and 20 drive motors inspected per year. A semi-automated handling machine will be used with the maintenance crew reduced from five to four. An effective (averaged over all conditions) dose rate of 170 μGy/h is estimated.

(4) **RIP/RHR/Heat exchangers** assume 3 pumps and 1 heat exchanger will be serviced per year. Estimates are based upon European experience assuming an effective dose rate of 400 μGy/h.

(5) **Inservice Inspection** is reduced by removal of recirculation line, elimination of 2 nozzle inspections per year, elimination of shield penetrations and plug removal associated with lines, improved automation equipment, and reduced vessel welds.

(6) **General Drywell** work is reduced by removal of recirculation line, reduced inspection of snubbers, and associated components.

(7) **Vessel** access and assembly will be reduced by the use of stud tensioner over 96 volts. Estimated dose rate is 30 μGy/h.

(8) **Refueling** will be reduced by use of an automated refueling platform where no personnel are located on the platform itself. Overall reduction is estimated at 20%.

(9) **Fuel Sipping** is delete based upon improved fuels.

(10) **CRD rebuilding** is reduced based upon rebuilding 2 drives per year.

(11) **CUW** assumes 2 pump inspections per year with canned motors based upon use of an improved motor design.

The table below delineates projected occupational exposure for a nominal operating year (does not attempt to evaluate off nominal occurrences.)

Area	Item	Exposure (Person mSv/yr)
Drywell	MSIV	30
	SRV	20
	CRD	30
	LPRM/TIP	50

Area	Item	Exposure (Person mSv/yr)
	ISI	80
	RIP/RHRx	50
	Misc	40
	Instruments	20
	Other	70
R/B	Vessel	20
	Refueling	5
	Inspection	5
	CRD	10
	CUW	40
	RHR	40
	Values/pumps	70
	Instruments	50
	Other	90
T/B	Turbine overhaul	20
	Valves/pumps	30
	Condensate	20
	Other	20
RW/B	Radwaste	50
Work at Power		160
Total		950

Question 471.19
Provide scaled layout and arrangement drawings of the facility showing the location at all sources described in Chapter 11 and Section 12.2, for the entire Nuclear Island, including inside the drywell. Layouts should show major shield wall thicknesses, controlled access areas, personnel and equipment decontamination areas, contamination control areas, location at airborne radioactivity and area radioactivity monitors, location of Health Physics facilities, post-accident sampling station and counting room.

Response 471.19
All arrangement drawings have been provided.

Question 471.20
Specify the design basis radiation level in the counting room during normal operation and anticipated occurrences.

Response 471.20
The counting room and its design basis radiation level is part of Section 12.5 (Health Physics Program) which is out of ABWR Standard Plant scope.

Question 471.21
Provide plant layout drawings that detail the radiation zone boundaries for refueling outage and accident conditions, in addition to the normal operating conditions shown on Tables 12.3-1 through 12.3-7 of the submittal. Layouts should show access control features and traffic patterns for the entire nuclear island.

Response 471.21
The radiation drawings are provided as requested.

Question 471.22
Identify all plant areas where radiation levels of 100 rads/h, or more, could result from normal operations or anticipated operational occurrences and describe additional control measures to protect workers from these hazards.

Response 471.22
Areas where radiation levels > 1 Sv/h could be expected.

(1) Normal Operation

(a) Reactor Water Cleanup System Backwash Receiving Tank

(b) Radwaste System Backwash Receiving Tank

(c) Drywell

(d) Downstream of Offgas Air Recombiner

(e) Offgas System First Charcoal Tank

(f) Tip Room

(2) Shutdown Operation

(a) Reactor Water Cleanup System Backwash Receiving Tank

(b) Radwaste System Backwash Receiving Tank

(c) Offgas System First Charcoal Tank

(d) Tip Room

Items (d) and (e) under Normal Operations and (c) under Shutdown Operations could be expected to approach 1 Sv/h only under significant fuel failure conditions. In all cases, these areas are locked and alarmed to prevent unapproved entry.

Question 471.23

The last paragraph in Subsection 12.3.1.3 states that all areas with radiation levels greater than 100 mR/h will be locked. This implies that the ABWR design will not incorporate Standard Technical Specification 6.12 which allows areas to remain unlocked up to 1000 mR/h. If this is not the case the radiation zone maps should be revised to identify zones with radiation levels greater than 1000 mR/h.

Response 471.23

The cutoff for ABWR is 1 mSv/h.

Question 471.24

Figures 12.3-3 and 12.3-4 show two stairwells on the east side of valve rooms B and C where the access to and from the stairs is in a low radiation zone (< 5 mR/hr), but the stairwell itself is in a high radiation area (≥ 100 mR/hr). Justify why additional shielding in the stairwell to prevent an unwarranted high radiation traffic area is not reasonably achievable.

Response 471.24

Access in the stairwell to the valve rooms is via a labyrinth passageway. The revised radiation zone drawings show this passageway more clearly.

Question 471.25

Figure 12.3-2 also shows an arrangement where one would have to traverse a high radiation area to get to a low radiation area. The insert diagram in Figure 12.3-2 shows that access to the TIP drive room (< 5 mR/hr) is through a room on the south side which is a high radiation area. Justify the planned access to the TIP drive room. Also provide the zoning layout for the entire 1500 mm level.

Response 471.25

The figure has been corrected.

Question 471.26
The first paragraph at the top of page 12.3-13 states that in the event of a complete TIP retraction, egress from the TIP room is possible with less than 100 mR radiation exposure. What features has the ABWR design incorporated to ensure that exposures received from the recovery from this event are ALARA?

Response 471.26
The paragraph has been revised to more clearly indicate egress and the associated drawing revised.

Question 471.27
Page 12.3-13 of the submittal has a statement that a concrete CRD storage vault, used for storing CRD parts and assembled units, is provided in the CRD maintenance room. This design feature is not indicated in Figure 12.3-2. Provide a figure depicting this design feature. Discuss the anticipated source term within this vault and associated shielding requirements.

Response 471.27
The CRD storage tanks are now shown on revised Figure 12.3-2.

Question 471.28
Provide information on the shielding for each of the radiation sources identified in Chapter 11 and Section 12.2, including the criteria for penetrations, the material, the method by which the shield parameters (cross section, buildup factor, etc.) were determined and the assumptions, codes, and techniques used in the calculations. Describe how the guidance provided in RG 8.8 has been followed in special protection features.

Response 471.28
The shielding design for those components listed as radiation sources in Section 12.2 were based primarily on existing practice. For large sources, a concrete wall thickness of 1.31 was chosen decreasing to 0.33 for low radiation sources. The overall design of the plant consists of placing specific areas of equipment into separate shielded compartments with entry into high radiation compartments via labyrinth entry ways. Areas of penetration of the primary containment and high radiation areas were designed via non-accessible pipe chases which could be accessed only by removing stationary walls or via locked doorways. Validation of shielding design was primarily done using the QAD-F code (Table 12.3-1) using standard references for cross sections and material densities such as ANS-6.1.1, ANS-6.1.2, and ENDF/B-IV.

With respect to following the guidance of Regulatory Guide 8.8, the ABWR from its conception had as a primary goal reduction of radiation exposure and occupational exposure. Two specific techniques were used toward this end: (1) remove sources of existing exposure in BWRs, and (2) reduce existing sources by using the best available technology. As an example of applying the first method, the ABWR replaced the existing recirculation pumps and piping in the primary containment with canned internal pumps which removed the single most significant source of radiation in the BWR occupational pool. As an example of applying the second method, the

ABWR uses fine motion control rod drives rather than existing hydraulic drives and therefore will require less maintenance than existing plants. The ABWR also has taken effort to remove sources of crud in the plant components by reducing cobalt bearing materials, improving water chemistry and filtration systems, and mandating the use of titanium condensers. Finally the ABWR basic design of compartmentalizing basic components with specific design details for ease of maintenance by removable walls reduces both maintenance time and cross area radiation contamination.

Question 471.29

Table 12.3-1 lists five computer shielding codes used in the ABWR design. The last entry in the table states "Additional Codes to be added by Applicant". Identify these codes and give a full description of their application to the ABWR design, or clarify the use of the term "Applicant".

Response 471.29

Applicant refers to the A/E responsible for designing the balance of plant. In regards the ABWR submittal, this involves codes and procedures used primarily in the turbine building which will be submitted when available.

Question 471.30

Describe whether the concrete shielding of the ABWR design follows the guidance on fabrication and installation in RG 1.69 in all cases. If not, describe the specific alternative method used.

Response 471.30

As indicated in Section 1.8, the ABWR design will meet the requirements of Regulatory Guide 1.69.

Question 471.31

Subsections 12.2.2.1 and 12.3.2.2.2 state that the ABWR shielding design is based on a fission product release rate of 50,000 mCi/sec of noble gas after a 30 minute decay time. The standard assumption (see Standard Review Plan p.12.2-4) is 100,000 mCi/sec. Justify the use of this much lower source term.

Response 471.31

The noble gas release reference of 1.85 GBq per second was based upon improved fuel performance for BWRs employing only 8X8 improved fuel and is in closer agreement with NUREG-0016. However, to provide a more conservative basis for shielding, the reference has been revised to the older 3.7 GBq per second noted in SRP 12.2-4. This has been changed throughout the SSAR.

Question 471.32
Describe any temporary shielding required to assure protection of individuals present in the upper drywell during refueling and fuel transfer operations. The description should include shield thickness, and material required for both normal and anticipated operational occurrences.

Response 471.32
Temporary shielding will not be used in the upper drywell to provide worker protection during fuel handling. The upper drywell design was modified with additional shielding to provide permanent protection. See Subsection 12.3.2.3.

Question 471.33
The acceptance criteria for radiation streaming through reactor shield wall penetrations (on page 12.3-12) is unclear. Describe the radiation streaming through reactor shield wall penetrations during refueling operations for all feasible fuel configurations.

Response 471.33
The sentence referred to on page 12.3-12 has been modified from “dose rates and core midplane” to “dose rates at the core midplane.” Essentially the level of shielding at any penetration as is shown in Figure 20.3.7-3 shall be sufficient so that the gamma or neutron streaming dose is less than or equal to the dose found exterior to the shield wall at the level of core midplane.

Question 471.34
Subsection 12.3.5 of the submittal identifies areas requiring access to mitigate the consequences of an accident. Indicate whether this is a complete list of the vital areas (as described in item II B.2 of NUREG-0737) of the facility. If not, identify the vital areas of the facility; and if so, justify why the post-accident sampling station (PASS) and the counting rooms are not considered vital.

Response 471.34
The list provided is revised to incorporate the counting room and remote shutdown panel. Access to the post-accident sample station and remote shutdown panel is provided off corridors from the service building. The sample station has been referred to as a drywell sample station in the formal text. The counting room is located in the service building above the technical support center and is labeled the monitor room. Subsection 12.3.5 has been revised accordingly.

Question 471.35
Provide a description of the design features needed to assure adequate access to vital areas. The description should identify major sources of radiation considered and protective requirements (for example the Response should address the contribution to radiation exposure at the PASS location from the stack monitor room).

Response 471.35
Response to this question provided in revised Subsection 12.3.5.

Question 471.36
Between pages 12.3-6 and 12.3-12, it appears that the designators RWSC, CUW and CUW are all being used interchangeably to refer to the Reactor Water Clean Up System. Verify which is correct and delete or define the other acronyms used.

Response 471.36
These pages have been revised.

Question 471.37
The fourth paragraph at page 12.3-9 indicates that drains from the SGTS filter housing will be piped directly to a floor drain sump. Industry experience has shown that these housing drains can provide bypass pathways around filter/absorber beds. Provide a description of the ABWR SGTS and Control Room filter housing drains showing how filter bypass is prevented.

Response 471.37
The fourth paragraph on page 12.3-9 requires clarification, "A connection to the filter train is provided so that a water source may be connected in the event the charcoal catches fire. However, the design basis for the cause of the fire is not failure to remove decay heat, but rather accidental ignition during maintenance or other periods not coincident with a LOCA. Decay heat (from iodine) is removed by forced convection from the redundant process fans located upstream of the filter train. These process fans are powered from separate divisions of diesels."

As such there is no open line piped to a floor drain sump, as stated in Subsection 12.3.1, from the filter train. There are loop seals located in the drains from the moisture separators in the Dryer Units and also in the line at the base of the stack. The downstream loop seal is provided with redundant level instrumentation to provide assurance that a net flow out of the secondary containment is maintained.

Question 471.38
Subsection 12.3.1.1(3) states that connections are provided for decontamination at heat exchangers in "highly radioactive systems." Identify these systems and heat exchangers.

Response 471.38
Specific connections are provided for chemical decontamination on the reactor water cleanup system heat exchangers. At this time no other special connections are identified for other exchangers.

Question 471.39
Provide layout drawings of the control room showing radiation zones during normal operation, anticipated operational occurrences, and design basis accidents. Shield wall thickness, calculational parameters (and assumptions), and the models used to determine compliance with GDC 19 should be indicated.

Response 471.39
Layout drawings with radiation zone are provided for the control room for normal operation and design basis accidents. Anticipated operational occurrences do not vary from normal operation for the control building complex. Shield wall thickness can be measured from the layout drawings. Assumptions for shielding calculations and models are found in Subsection 12.3.2.

Question 471.40
Figure 12.3-7 indicates that the area above the spent fuel pool is a high radiation zone. Provide dose calculations for refueling and other anticipated operations above the pool. Calculations should include contribution from activity suspended in pool water as well as direct radiation from spent fuel and other components in the pool.

Response 471.40
The designation of the area as radiation level F is based on BWR operating experience, not specific calculations for the ABWR.

Question 471.41
Figure 12.3-6 shows several small A zones (≤ 0.6 mR/hr) completely surrounded by higher level zones (C zones). What are the purposes of these areas and justify why continuous A zones cannot be provided.

Response 471.41
Figure 12.3-6 has been revised.

Question 910.7
The ABWR Licensing Review Bases document states in its Section 7.1 that the importance of such potential contributors to severe accident risk as sabotage should be carefully analyzed and considered in the design of new plants. To permit our review of this analysis and considerations, please provide a discussion of the insider and outsider sabotage actions that would be necessary to cause significant core damage or Part 100 release levels. This discussion should include identification of the ABWR design features that decrease reliance on physical security programs for sabotage protection. (13.6.1)

Response 910.7
Response to this question is provided in Subsection 19B.2.4 which resolves the sabotage vulnerability USI A-29.

Question 910.8
The terminology used should not differ from terminology used in 10CFR73, such as “high-security areas” instead of “protected and vital areas”, and “clear areas adjacent to the physical barriers” instead of “isolation zones.” (13.6.3.7)

Response 910.8
Wording has been changed accordingly in revised Subsection 13.6.3.7.

Question 910.9

At many current generation BWRs, protection of essential service water systems, needed for support of emergency diesel generators and for suppression pool cooling, are among the most demanding security system requirements because of their components' locations at the peripheries of the protected areas. For the ABWR, these cooling functions may be performed by the reactor building cooling water system (RCW). If it is not intended that RCW be designated as a vital system, please provide justification for that position. If it is intended that RCW be designated as a vital system, please provide sabotage protection interface requirements for the RCW and any supporting systems required for it to support a safe reactor shutdown. In addition to protection of safety-related portions of the RCW system, these interface criteria should address prevention of sabotage of any non-safety-related parts of the RCW system from interfering with its safety-related functions. They also should address criteria on portions of the system, such as the sea water heat exchanger building, that may be site specific and not in the Nuclear Island scope. (9.2.11, 9.2.16 & 13.6.3)

Response 910.9

The RCW pumps and heat exchangers are located within the control building and are considered to be a vital system. In addition, the service water pumps and heat exchangers are considered to be a vital system. All supporting valves and piping are considered to be part of this vital system. The protection of these components is site unique and therefore out of scope of the ABWR Standard Plant design.

Question 910.10

In addition to measures for detection of the inoperability of vital equipment and for control of access to areas containing vital equipment, site specific requirements for certain security systems (e.g., uninterruptible security lighting and power, and in-plant security communications) might be more efficiently incorporated and avoid impacts on ABWR design scope safety systems if considered in the standard plant design stage. Discuss what provisions for these security systems have been provided in the standard design, and provide interface criteria that will allow the security requirements for these systems to be accomplished without adversely interfering with safety systems. Include criteria necessary to assure that:

(1) There are no areas within the Nuclear Island where communication with the central and secondary alarm stations is not possible

(2) Portable security radios will not interfere with plant monitoring equipment

(3) Minimum isolation zone and protected area illumination capabilities cannot be defeated by sabotage actions outside of the protected area

(4) Electromagnetic interference from plant equipment startups or power transfers will not create nuisance alarms or trip security access control systems (9.5.2, 9.5.3 & 13.6.3.7)

Response 910.10
These items are outside the scope of the ABWR Standard Plant design. The certification users referencing the ABWR Standard Plant design are responsible for meeting the requirements of 10CFR73.55(f). These requirements are imposed as interface criteria in Subsection 9.5.13.11.

Question 910.11
Submit the analysis that supports the vital areas results described in this section. Affirm that these areas include all of the reactor coolant pressure boundary, including appropriate motor control centers and power supplies, and systems required for mitigation of transients, and support systems (e.g., cooling water, instrumentation, control power) necessary for these systems to operate. Delineate which systems are included in paragraph (1)(a) of Subsection 13.6.3.3 as vital "core cooling systems," and which components in these system are vital components. Which vital systems would be out of the scope of the standard Nuclear Island and thus subject to plant specific review? (13.6.3.3)

Response 910.11
Response to this question is provided in revised Subsection 13.6.3.3.

Question 910.12
Localized alarmed doors and keyed cylinder lock doors are not acceptable for control of access to vital areas. 10CFR73.55(e) requires all vital area alarms to indicate in two alarm stations. #73.55(d)(7) requires all unoccupied vital areas to be locked and alarmed. It also requires provisions for rapid ingress or egress. All doors and hatches into or out of vital areas should have balanced magnetic switches with tamper-safe cabling. (13.6.3.4)

Response 910.12
Response to this question is provided in revised Subsection 13.6.3.4.

Question 910.13
The effectiveness of grills and grates, used to prevent access through ducts and air intake and exhaust systems, may depend on how isolated and hidden from view is the exterior of the vital area barrier at the opening under consideration. Steel grills and 3/4-in. steel bars can be cut with hand tools and may not provide sufficient protection in isolated locations. Regulatory Guide 5.65 provides some examples of alternative ventilation barriers with longer penetration times. Furthermore, ducting to the control room should also satisfy the bullet resistant requirement of 10CFR73.55(c)(6) for protection of the operators in the control room. (13.6.3.6)

Response 910.13
Response to this question is provided in revised Subsection 13.6.3.6.

Question 910.14
To prevent confusion with national security information usage of the term "confidential", please follow the directions in NUREG-0794, Protection of Unclassified Safeguards

Information, for appropriate marking, and handling, of sensitive but unclassified safeguards information. (13.6.3)

Response 910.14

The pages are now marked in accordance with NUREG-0794.

Question/Response 910.15

This question number not used.

Question 910.16

Replace references to “industrial sabotage” with “radiological sabotage”, as defined in 10CFR73.2(p). (13.6)

Response 910.16

“Industrial sabotage” changed to “radiological sabotage” in Subsection 13.6.3.1.

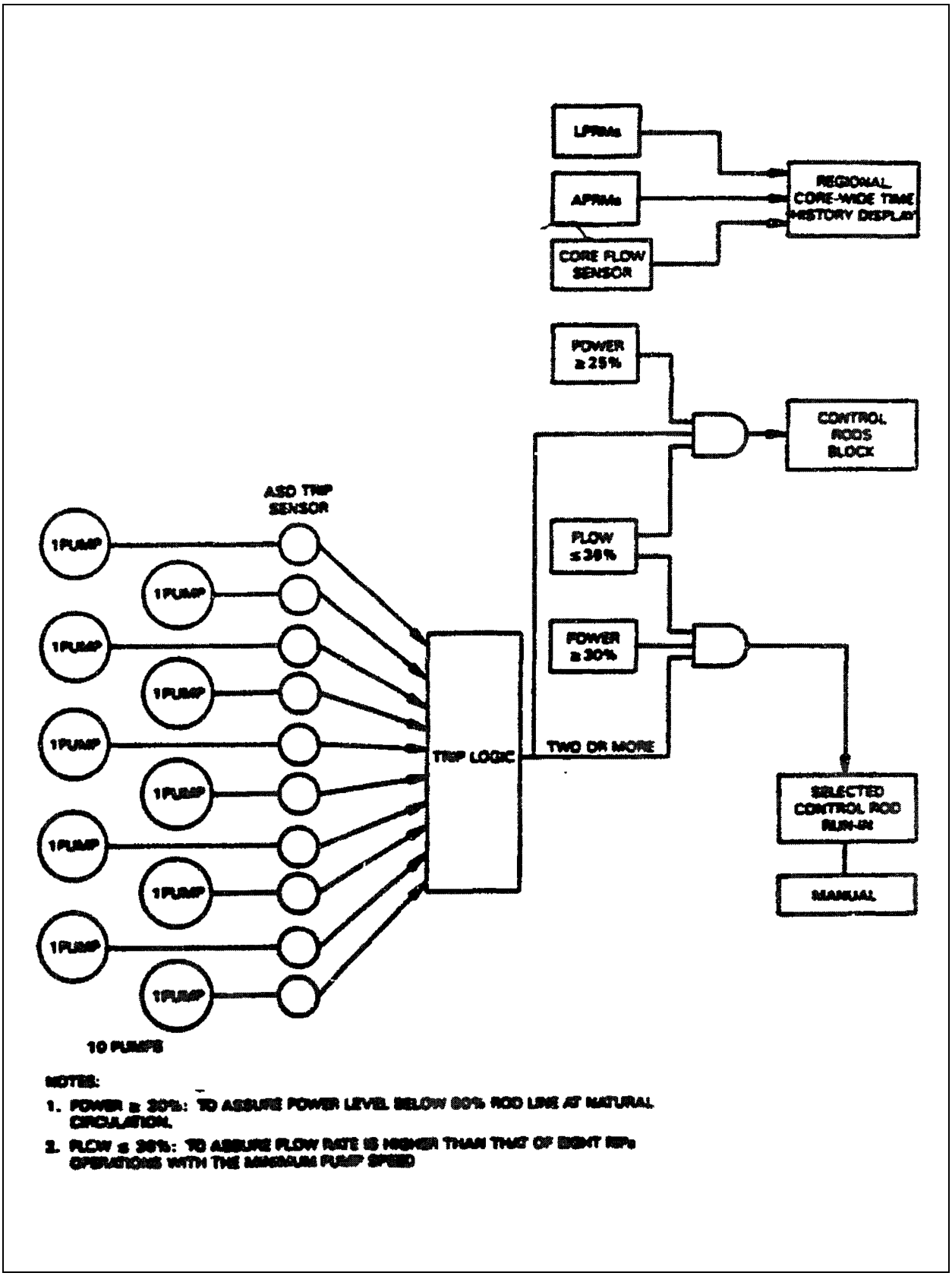

Figure 20.3.7-1 Stability Controls and Protection Logic (Response to Question 100.1)

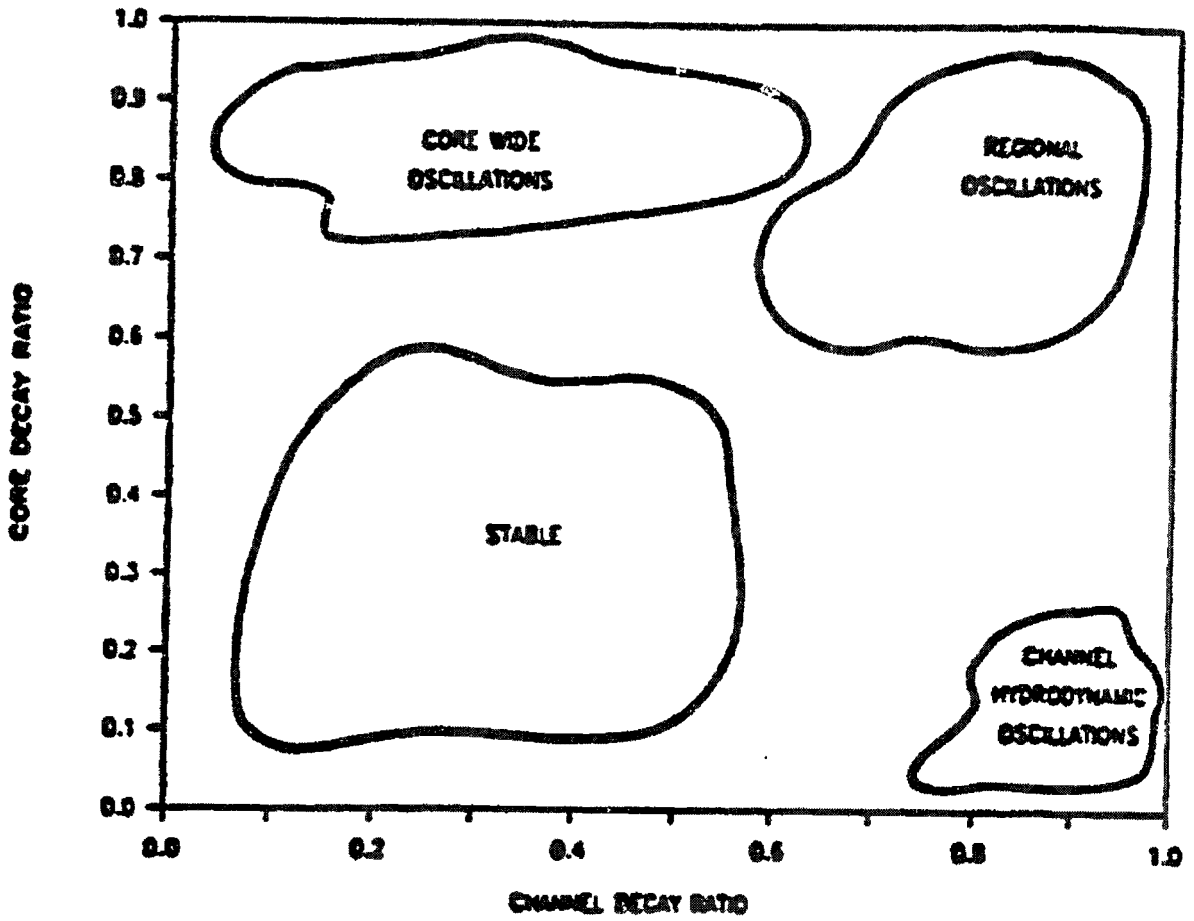

O	LOW CHANNEL/LOW CORE DR	STABLE
O	LOW CHANNEL/HIGH CORE DR	CORE WIDE
O	HIGH CHANNEL/LOW CORE DR	CHANNEL
O	HIGH CHANNEL/HIGH CORE DR	REGIONAL

Figure 20.3.7-2 Relationship Between Modes (Response to Question 100.1)

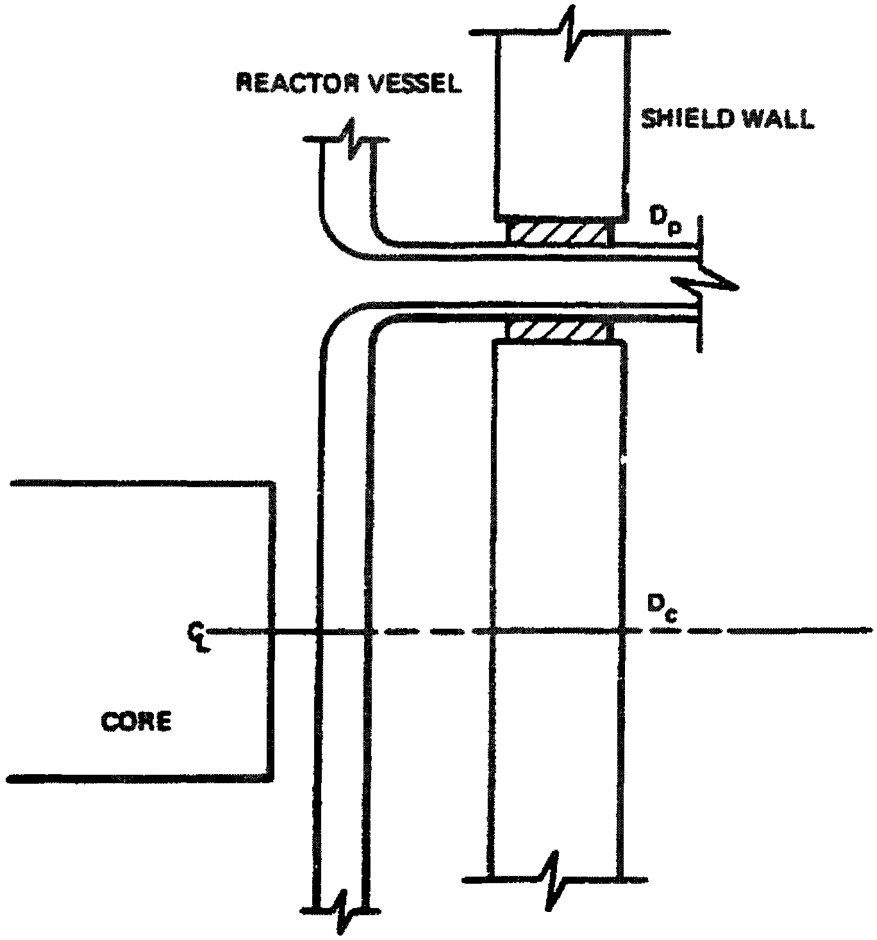

$D_p \leq D_c$

D_p = DOSE AT PENETRATION

D_c = DOSE AT CORE MIDPLANE

Figure 20.3.7-3 Penetration Shielding Relationship to Core Midplane Dose (Response to Question 471.33)

20.3.8 Response to Eighth RAI — Reference 8

Question 260.1

General Electric's commitment to QA-related Regulatory Guides (Rgs) is given in Table 17.0-1. In accordance with Chapter 17 of the Standard Review Plan (NUREG-0800), a commitment to RGs 1.8, 1.26, and 1.29 should also be made. This can be done by referencing another section of the Safety Analysis Report.

Response 260.1

Table 17.0-1 has been changed accordingly. Also references to Table 17.0-1 have been made in Table 1.8-20 for applicable Regulatory Guides.

Question 260.2

Clarify why Table 17.0-1 shows RG 1.94 as not applicable to the ABWR scope while similar RGs for installation, inspection, and testing (RGs 130 and 1.116) are shown as being applicable.

Response 260.2

Regulatory Guide 1.94 relates to the installation, inspection, and testing of structural concrete and structural steel and is applicable to the ABWR Standard Plant Scope without exception. Table 17.0-1 has been changed accordingly.

Question 260.3

Revision 3 of RG 1.28 states, "Applicants and licensees may commit to follow either the ANSI/ASME N45.2-series standards, but the third paragraph of SSAR Section 17.0 states that the terms and definitions of NQA-1 apply and SSAR section 17.1 refers throughout to NOA-1. Clarify whether GE commits to the N45.2-series standards referenced in RG 1.28 (As clarified in Reference 1), to the NQA-1 standard, or to both.

Response 260.3

GE will comply with the requirements of ANSI/ASME NQA-1-1983 and NQA-1a-1983. GE win implement these requirements using methods acceptable to the NRC and documented in NEDO-11209 and this SSAR.

Question 420.1

Identify the topical reports that will be provided to support any aspects of the design that are substantially different relative to designs previously reviewed by the staff. Subjects addressed in these topical reports should include but not necessarily be limited to the following:

Overall block diagram(s) and descriptions of the reactor protection and engineered safety features actuation system, showing the architecture of the system, the allocation of functions to modules, and the communication channels among modules. Digital and analog modules should be identified. Methods for assuring required independence should be clearly identified, as well as power supply dependencies, division boundaries and non-safety system interfaces. A description of the scope of on-line and diagnostic testing features for the proposed system

should be provided with reference to this diagram, to illustrate compliance with testability requirements. (7)

Response 420.1

The ABWR design is described in the SSAR and associated design documents referenced in Subsection 1.1.3. Table 7.1-1 provides a comparison of GESSAR II and ABWR I&C safety systems. No additional topical reports will be generated.

Several copies of the complete block diagram of the safety system logic and control (SSLC) system were provided to the NRC under proprietary agreement following the I&C Systems Branch meetings in San Jose,6/22/89. This diagram contains all of the requested information. An abbreviated version is provided in Appendix 7A, Figure 7A.2-1.

A detailed description of the reactor protection system (RPS), with accompanying block diagrams specific to the RPS logic, are provided in Section 7.2.

SSLC system architecture is discussed in Appendix 7A, particularly Section 7A.2, Responses (10) and (11).

A description of the diagnostic testing features inherent in the self-test subsystem (STS) is provided in the “sixth test” in Subsection 7.1.2.1.6. Additional information is provided in Appendix 7A, Subsection 7A.2, Responses (6) and (14).

Question 420.2

Identify the topical reports that will be provided to support any aspects of the design that are substantially different relative to designs previously reviewed by the staff. Subjects addressed in these topical reports should include but not necessarily be limited to the following:

The applicant's overall design verification program, covering development of the functional requirements, criteria, specifications, design, manufacture, test, and qualification methods and procedures; this should include a V&V plan for software design verification/validation. (7)

Response 420.2

In response to this question, refer to Appendix 7A, Section 7A.7, under the heading: “Items 7A.5(1) and 7A.5(2)”. Detail information may be found in the ABWR Design Specifications referenced in Subsection 1.1.3.

Question 420.3

Identify the topical reports that will be provided to support any aspects of the design that are substantially different relative to designs previously reviewed by the staff. Subjects addressed in these topical reports should include but not necessarily be limited to the following:

Failure modes and effects analysis for the I&C system.(7)

Response 420.3
The failure modes and effects analysis is contained in Appendix 15B, Section 15B.4. No separate topical reports will be provided.

Question 420.4
Identify the topical reports that will be provided to support any aspects of the design that are substantially different relative to designs previously reviewed by the staff. Subjects addressed in these topical reports should include but not necessarily be limited to the following:

A defense-in-depth analysis, demonstrating the diversity in the system that precludes the likelihood of common mode failures. (7)

Response 420.4
In response to this question, refer to Appendix 7A, Section 7A.7 under the heading: "Items 7A.5(4) and 7A.6(4)". Detail information may be found in the ABWR Specifications referenced in Subsection 1.1.3.

Question 420.5
Identify the topical reports that will be provided to support any aspects of the design that are substantially different relative to designs previously reviewed by the staff. Subjects addressed in these topical reports should include but not necessarily be limited to the following:

System (and significant component) reliability goals, assumptions, methodology, model, analysis, and evaluation. (7)

Response 420.5
No topical reports will be provided. However, the information is provided in the responses to other similar questions as follows:

- Reliability goals—(See response to Question 420.63)
- Model/Assumptions—(See response to Question 420.64)
- Methodology—(See response to Question 420.65)
- Test/Evaluation—(See response to Question 420.67)

Additional information may be found in Appendix 7A and the design specifications and analysis documents referenced in Subsection 1.1.3.

Question 420.6
Identify the topical reports that will be provided to support any aspects of the design that are substantially different relative to designs previously reviewed by the staff. Subjects addressed in these topical reports should include but not necessarily be limited to the following:

Methodology, basis and acceptance criteria for qualifying the system and equipment to the design basis electromagnetic interference (EMI) environment. (App 3I)

Response 420.6

No topical reports will be provided. However, system tolerance to EMI is discussed in the following sections of Appendix 7A: 7A.2, Response (4); 7A.2, Response (15); 7A.3, Response (6); and 7A.3, Response (8). Additional detail is provided in the design documents referenced in Subsection 1.1.3.

Question 420.7

(App 3I) Identify the topical reports that will be provided to support any aspects of the design that are substantially different relative to designs previously reviewed by the staff. Subjects addressed in these topical reports should include but not necessarily be limited to the following:

Methodology, basis, and acceptance criteria for qualifying the system and equipment to the design basis surge withstand capability (SWC). (App 3I)

Response 420.7

No topical reports will be provided. However, the system shall comply with standard surge withstand capability tests as defined by IEEE-472 (ANSI C37.90.1). This commitment, along with other information concerning SWC, is discussed in Sections 7A.2 [Response (4)] and 7A.3 [Response (8)] of Appendix 7A.

The use of fiber-optic cable greatly reduces the susceptability of the equipment to surges (other than power line surges) and other types of propagated electrical disturbances.

Question 420.8

Identify the topical reports that will be provided to support any aspects of the design that are substantially different relative to designs previously reviewed by the staff. Subjects addressed in these topical reports should include but not necessarily be limited to the following:

Methodology, basis, and acceptance criteria for qualifying the system and equipment to the design basis thermal environment established by localized heat transfer within electronic equipment, including in non-accident environments; this should also address requirements for humidity controls to preclude damage from electrostatic discharge. (App 3I)

Response 420.8

The environmental qualification methodology and requirements for systems and equipment are described in Subsection 3.11 and in the design documents referenced in Section 1.1.3 (in particular, Environmental Quality Requirements for Safety Grade Equipment, BWR Requirements - Equipment Environmental Interface Data and Safety System Logic & Control Design Specification). No additional topical reports will be provided.

The panel internal environment is maintained to ensure that reliability goals are achieved. Thermal margins are such that panel internal cooling by natural convection is sufficient. Fans

may be used to improve long term reliability, but no credit is taken for forced-air cooling in the qualification of safety-related functions.

Even heat load distribution is a design goal. Thermal design adequacy will be demonstrated by analysis of heat loads (per circuit module, per bay, per panel) as required by the design specifications. Thermal design will allow for addition of 15 percent more processing modules for future expansion. (See also the response to Question 420.92.)

Voltage potential buildup leading to damage from electrostatic discharge shall be limited by proper grounding of equipment and use of appropriated static control materials and dielectric barriers to ensure that high potentials cannot be coupled to sensitive semiconductor devices. Humidity controls are provided by the normal and emergency HVAC systems; when relative humidity is restricted to the ranges specified for the mild environment locations where the microprocessor equipment will be installed, there will be no unusual static charge buildup.

Question 420.9

Identify the topical reports that will be provided to support any aspects of the design that are substantially different relative to designs previously reviewed by the staff. Subjects addressed in these topical reports should include but not necessarily be limited to the following:

Methodology, basis, and acceptance criteria for qualifying electronic and fiber-optic systems and equipment to the design basis radiation environment, including in environments normally considered “mild” for insulation materials.(App 3I)

Response 420.9

The electronic and fiber optic systems used for ABWR safety systems are intended for use in a control room environment, whether used in the main control room or in a local area. Cables, either fiber optic or metallic, will not be routed through high radiation areas. There will be no fiber optic cable runs within the primary containment.

All electronic components and fiber optic cabling shall be designed to operate within the design basis radiation environments at the locations where they are installed, as specified in the BWR Requirements document, “Equipment Environmental Interface Data” (See Subsection 1.1.3).

Local safety system equipment includes load drivers for driven equipment, remote multiplexing units, and associated fiber optic cabling. This equipment will be installed in clean areas (emergency electrical equipment rooms) of the reactor building outside the secondary sontainment. The remaining safety system equipment, including load drivers for RPS and MSIV pilot valve solenoids, shall be located in the control building and main control room. Components located in these areas are assumed to be exposed to insignificant levels of radiation as shown by the data in the referenced spec; therefore, radiation exposure of components will not be required to establish qualification.

If significant radiation exposure were expected, then electronic components and fiber optic cabling would be qualified by test to the ABWR reference standard (Design Specification, "Environmental Quality Requirements for Safety Grade Equipment" (See Section 1.1.3). This document defines methods of radiation aging and specifies Reg. Guide 1.89, which endorses IEEE-323, as a required standard for implementing an acceptable qualification program.

Question 420.10

Identify the topical reports that will be provided to support any aspects of the design that are substantially different relative to designs previously reviewed by the staff. Subjects addressed in these topical reports should include but not necessarily be limited to the following:

Task analysis for the man/machine interface to the system. (7)

Response 420.10

Collectively, the instrumentation and controls for the plant systems form the man/machine interface for the plant. This man/machine interface is largely, but not completely, contained in the control room. In this SSAR, the subjects of the plant MMI and control room configuration are not dealt with in Chapter 7 but are covered in Chapter 18. MMI and other aspects of the design of the control and instrumentation are described in the design documentation. There are no topical reports which describe significant differences between the ABWR and previous BWR designs. However, Table 7.1-1 of the SSAR compares the ABWR I&C design with that of GESSAR II.

Question 420.11

Identify the topical reports that will be provided to support any aspects of the design that are substantially different relative to designs previously reviewed by the staff. Subjects addressed in these topical reports should include but not necessarily be limited to the following:

Wide Range Neutron Monitor design basis. (NEDO-31439, May 1987) If this system is not part of the ABWR (Section 7.6.1.1 indicates it is not) provide justification for its exclusion. (7.6.1.1)

Response 420.11

In the ABWR, the system "Wide Range Neutron Monitor" is implemented and is named the "Start-up Range Neutron Monitor" abbreviated as "SRNM". With reference to Subsection 7.6.1.1, the "SRNM" subsystem design description can be found in the topical report "The Nuclear Measurement Analysis & Control Wide Range Neutron Monitoring System (NUMAC-WRNMS)", NEDO 31439, May 1987. However, this topical report does not contain ABWR plant-specific design parameters, such as total number and locations of SRNM used in the reactor core, SRNM trip setpoints, etc. Such plant specific information can be found in the NMS design specification (see Subsection 1.1.3).

Question 420.12

Identify the topical reports that will be provided to support any aspects of the design that are substantially different relative to designs previously reviewed by the staff. Subjects addressed in these topical reports should include but not necessarily be limited to the following:

10CFR50.62 (ATWS) conformance. Specifically address the manually initiated SLCS conformance (7.4.2.2.2(1)) to the ATWS rule (50.62(4)) of automatic initiation. (7.4.2.2.2)

Response 420.12

No special topical reports will be issued to address the ABWR ATWS design. The conformance of 10CFR50.62 for the ABWR design is discussed in Section 15.8 of the SSAR. Additional discussions are provided in the responses to NRC Questions 440.103, 440.104 and 440.115.

Question 420.13

One of the goals of the ABWR is simplification. The October, 1987 presentation mentions a 60% reduction in instrumentation. Which plants is this referenced to? Provide a description of the instrumentation which is no longer considered necessary.

Response 420.13

The instrument reduction occured within the design phases of the ABWR itself. The basic configuration of the initial design of the ABWR nuclear boiler system (NBS) instrumentation and related systems' initiation logic is very similar to that of the BWR/5 and BWR/6 (and GESSAR II Standard).

As part of the ABWR cost analysis justification study, the number of transmitters required to provide the primary NBS instrumentation functions was reduced from 84 to 30. These substantial (i.e., 64%) reductions in the NBS instrumentation were accomplished without impairment of safety or compromise of reliability of any system and will result in both an inital savings in sensor, instrument rack and installation costs and, in the longer term, a saving in manpower to conduct periodic maintenance and calibration work.

These reductions in NBS instrumentation were primarily accomplished through the broad scope sharing of transmitters such that individual transmitters now provide inputs to a number of different systems and functions. This is possible because of the four independent divisions and two-out-of-four logic adopted for the RPS and ESF systems in the ABWR control and instrumentation design.

Question 420.14

Address the effects of Station Blackout on the HVAC required to maintain functional electronics. (7.1.2.3.9)

Response 420.14

No HVAC systems are operational during station blackout. Preliminary analysis has shown that the limited amount of equipment available and used during station blackout reduces the heat

generated to a point where temperatures remain within the qualified limits of the operating equipment. It is a COL license information requirement to perform a temperature heat rise analysis for the Station Blackout scenerio applied to the control room in consideration of the environmental temperatures unique to the plant location. (See Subsection 7.8.1)

Question 420.15

Address the redundancy and diversity of the power supplies for ARI. (7.4)

Response 420.15

Subsection 7.4.1.1 has been revised as shown in the attached mark-up of that section of the SSAR. Currently, the ARI function is implemented both hydraulically and electromechanically. The new design, in addition to the usage of the "FMCRD Run-In" function (i.e., electromechanical), also includes the ARI valves (i.e., hydraulic) that can cause reactor shut down, independently and diversely from the Reactor Protection System.

The design of the ARI function has therefore been expanded to meet all of the requirements of GE's Licensing Topical Report (LTR) NEDE-31906-P-A, titled "Response to NRC ATWS Rule, 10CFR50.62". Redundancy and diversity of power supplies are also addressed in this LTR.

Question 420.16

Address the decision to make the ARI non-1E instead of 1E system. (7.4)

Response 420.16

The question of non-1E vs. 1E has also been addressed in the GE LTR NEDE 31906-P-A. The design of the ARI function meets the requirements of this LTR, which is endorsed by the ABWR Standard Plant.

Question 420.17

Describe the trade-off analyses leading to the selection of an analog or digital approach for implementing the logic of the safety system. Describe the major criteria that the trade-off was based on. Show how the trade-off criteria is in accordance with applicable design criteria. (7)

Response 420.17

Design Criteria For ABWR Safety System Logic—In comparison with BWR/5 plant designs:

(1) Reduce control room equipment volume.

(2) Reduce quantity of system cabling.

(3) Reduce inadvertent reactor trips

(4) Permit proper interface with advanced operator benchboard design; i.e., high speed communication with CRT displays and flat screen touch panels.

(5) Improve man-machine interface.

(6) Improve availablity (reduce downtime).

Trade-off Considerations

Since the safety system logic is separated into four divisions, with 2-out-of-4 trip logic in each division, a digital design similar to the Clinton nuclear system protection system (NSPS) was considered advantageous. NSPS uses discrete solid-state logic for trip decisions, thus eliminating a large number of relays, but still has hardwired analog signals to the control room. NSPS also has a digital, on-line, self-diagnostic system that permits complete testability of the four logic divisions in a manner not practical for analog/relay systems. When multiplexing was considered as a means to reduce cable volume, it was decided to use microprocessor logic to permit proper interfacing to the multiplexing system and to integrate more system functions into a smaller quantity of equipment, eliminating all relay cabinets for RPS and ESF functions. Multiplexing also permits local digitizing of plant variables near their transmitters and digital transmission of encoded signals over a low noise, high speed, fiber optic cable.

A list of other trade-offs between analog and digital technologies is shown below:

Trade-offs

(1) Digital

- PRO:
  - Stable.
  - No drift.
  - Accurate setpoints
  - Precise hysteresis.
  - Low noise.
  - Serial communication (less cable).
  - Data multiplexing.
  - Easy implementation of bypassing.
  - Self-diagnostics (improves MTTR).
  - Auto-calibration.

- Improved man-machine interface (graphical displays, prompting help, digital data entry).
- Future updates made via software (no wiring changes or extra hardware).
- Less equipment (more functions integrated into software logic).
- Lower power requirements (CMOS logic, less equipment).

■ CON:

- Complex, safety-related software (V&V program required).
- Complex, subtle failure modes, difficult to identify.
- Complex testability, logic points not available to technician with simple measuring instruments.
- Complex equipment for troubleshooting, requiring skilled personnel (Interrelationships and responses of logic functions not obvious to technician unless source code and logic analyzer are available).
- Jumpering of logic for temporary testing not possible.
- Repair is limited to module replacements, which must be kept as spares, since repair of modules is not practical on-line.

(2) ANALOG

■ PRO:

- Simple, proven technology.
- Easy troubleshooting and repair.
- Analog displays are low cost and easily implemented.Status of analog signals or relay coils and contacts is readily determined at any point in instrument loop.
- Measurements possible with simple instruments by relatively unskilled technicians.
- Simple parts replacement.

■ CON:

- Signals and setpoints subject to drift.

- Constant calibration required.
- Electromechanical analog meters have low resolution and reliability and may become slow and inaccurate over time.
- Complex logic for interlocks and controls involving interdivisional signals requires large quantities of relays and wiring and is not easily testable automatically.

Conclusions—The complexities of a software-based, microprocessor-controlled system are compensated for by its higher performance, greater stability and accuracy, and reduced quantity of equipment. System inputs and outputs can be added or deleted without wiring changes. System functions can be changed in software ("firmware") without using extra hardware. These advantages, plus the availability of self-diagnostics, greater automation of functions, and improved man-machine interface, led to the selection of a digital system.

Question 420.18

For the proposed use of digital computers, show how the digital system is superior to analog alternatives to implementing the logic. Show how the analyses determined that the realiability of the digital computer based system was better than the reliability of the analog system. (7)

Response 420.18

The analysis showing the superiority of the digital system compared with the analog system is given in the response to Question 420.17.

With regard to reliability, the SSLC facilitates a full "any-2-out-of-4" digital logic for both RPS and ESF systems, which is inherently more reliable than (1/2)X2 logic typically used in the previous analog designs. Distributed microprocessors are used to perform simple logic decisions in much the same way relays were used in earlier designs. The SSLC is not dependent on a centrally located digital computer.

Question 420.19

This section states that automatic self-test is performed sequencially on all four divisions, to minimize common mode effects, and that a complete self-test sequence through all four divisions takes no more than 30 minutes. The original response to question 19 revised this section. What hardware and software design features are provided to allow sequencing the testing of the four divisions without violating independence/isolation criteria? The revised section appears to allow a common centralized test driver. Illustrate with a block diagram.(7.1.2.1.6(4))

Response 420.19

Please refer to the response to Question 420.73 and 420.127, which are closely related. Figure 7.1-1 was revised in accordance with the design change which eliminated the on-line interconnecting concept for the self-test function. This provides the requested block diagram.

The previous revision of Subsection 7.1.2.1.6 was incomplete and now been completely revised consistent with this philosophy.

The updated SSLC self-test program includes an on-line test and an off-line test. Both are independently conducted on each division. There are no common centralized test drivers. Details are described in the updated Subsection 7.1.2.1.1(6), and Section 7A.2 responses (6) and (14).

Question 420.20

Describe the fiber optic links in the safety systems. What signals are multiplexed on each link? Show how the independence criteria in accordance with IEEE-603 and IEEE-379 is satisfied with the proposed configuration of fiber optic links. (7)

Response 420.20

Figure 7A.2-1 of Appendix 7A to the ABWR Standard Plant SAR illustrates the safety system logic and control (SSLC) and its associated interface with the essential multiplexing system (EMS). Two types of fiber optic links are shown: (1) fiber optic links comprising the control data network of the EMS; and (2) fiber optic links providing interdivisional communication between SSLC units.

The fiber optic links comprising the EMS control data network of a given division of instrumentation and control are used to transmit data from process sensors and discrete monitors, as well as control output signals to actuators for that division. A list of equipment (sensors, switches, etc.) which interface with the EMS are provided in Table 7A.2-1 of Appendix 7A for the ABWR SSAR.

The fiber optic links between SSLC units in different divisions of instrumentation and control are used to transmit individual channel trip signals from the various divisional digital trip modules (DTMs) to the trip logic units (TLUs) where coincident trip logic voting is performed (e.g., 2/4) for given division (refer to Figure 7A.2-1).

The EMS of a given division of instrumentation and control is physically and electrically separated from EMS subsystems of other divisions. Furthermore, the EMS subsystems of different divisions operate asynchronously with respect to each other. A single failure of a component of the EMS in a given division, therefore, will not interfere with the proper operation of the independent and redundant EMS subsystems in other divisions, and the independence criteria of IEEE-603 and IEEE-379 are satisfied.

Fiber optic signal transmission between SSLC units in different divisions is also initiated in an asynchronous manner, and transmission circuitry in a given division is physically and electrically separated from that of other divisions. A single failure of a component in a given division, therefore, only affects transmission or reception of channel trip signals within that division. Divisional redundancy of safety systems and fault tolerance resulting from coincident voting to initiate safety related actions preclude any single failure from inhibiting a safety

function, and the independence criteria of IEEE-603 and IEEE-379 are also satisfied for these links.

Question 420.21

Describe the safety computer system's interface to any non-safety computer systems and other plant instrumentation. Describe if information transfer from 1E to N-1E computers is via broadcast or handshake. (7)

Response 420.21

The ABWR does not use a central “safety computer” to initiate any safety function. Individual Class 1E microprocessors are used in place of CMOS (GESSAR II design) in the logic. The important distinction is that the ABWR uses a modern form of digital computer device (i.e., microprocessors) for the same reasons relays and solid-state devices were used in earlier designs (i.e., making simple logic decisions); not for making complex calculations for which protective action is dependent.

Interactions between electrical divisions and with non-1E functions are performed via fiber-optic cable. Thus, electrical independence is maintained. Information transfer from 1E to non-1E devices is via broadcast only.

Question 420.22

Provide a table of conformance to IEEE-603 and ANSI/IEEE-7-4.3.2. (7)

Response 420.22

Conformance with IEEE-603 and ANSI/IEEE-7-4.3.2 is discussed in Appendix 7A, Section 7A.7.

Question 420.23

Provide a table of conformance to IEEE-384, indicating where credit is taken for isolation or separation, what devices or methods are used, and the basis of isolation device qualification. If specific types of components have not been chosen, provide specification level information including testing acceptance criteria. (7)

Response 420.23

IEEE-384 is addressed in Table 7.1-2, as endorsed by Regulatory Guide 1.75. Since the requirements of this guide envelope and endorse IEEE-384, it is not necessary to discuss IEEE-384 separately. Individual systems analysis sections discuss the degree of conformance, and exceptions (if any).

In general, electrical isolation is accomplished through the use of fiber-optic cable.

Question 420.24

Are any artificial intelligence features provided in the proposed system, whereby probabilistic judgements are made by the system, or whereby the system can “learn” during its operational life? (7)

Response 420.24
No. As explained in the response to Question 420.21, the microprocessors are used only for making simple logic decisions. Artificial intelligence features are not used in the ABWR safety system design.

Question 420.25
Is credit taken in the safety analysis for any rotating memory devices such as disk drives? (7)

Response 420.25
No. As indicated in the response to 420.21, no safety action is dependent on computations from the central processor. Therefore, no safety credit is taken for rotating memory devices. The control programs for SSLC are contained in ROM as firmware.

Question 420.26
What is the definition of “Safety Associated” as used in SAR Section 7.1.2.1.6? (7.1.2.1.6)

Response 420.26
The self-test subsystem (STS) is classified as “Safety Associated” because its function is not safety related, yet it is intimately interconnected with functions which are safety related (i.e., the safety system logic & control network which controls RPS and ESF functions). Since the STS hardware is qualified Class 1E, and receives its power from the divisional buses, the subsystem may be considered Class 1E so far as IEEE-384 is concerned.

Question 420.27
Specify which parameters are to be triplicated. At what point does the triplication start (flow orifice, sensor?) and end (transmitter, trip logic?). If there is triplication of sensors is there diversity between sensors? (7)

Response 420.27
Some of the non-safety-related process systems use triplicated logic; however, the safety systems, which are the subject of these questions, have sensors and logic in four protection divisions and will be addressed in this response.

The sensors are not diverse among divisions, but are powered separately by the divisional power sources. The logic for most parameters is 2-out-of-4 in each division. Thus, the output of the sensor trip logic for each variable in a division is sent to the other divisions of the particular system. The resulting 2/4 coincidence trip signal is applied to energize the driven equipment in each division. For ESF functions, the driven equipment within a division is not replicated, but the coincidence trips are processed in dual logic processors with a 2-out-of-2 voted output to prevent inadvertent initiation of pumps or valves. In case one processor fails, automatic bypass permits temporary 1-out-of-1 output until repair is accomplished.

For RPS and MSIV, input logic is 2-out-of-4 as above, but the output load drivers which energize various groups of solenoids are also arranged in a 2-out-of-4 grouping. This permits

bypassing a full division of logic while still maintaining control of all solenoids with 2-out-of-4 input logic and 2-out-of-3 output logic.

Question 420.28

Section 15.A.2.2 defines “Safety” and “Power Generation.” The staff did not locate definitions for “important to safety” and “safety related” which are used in Chapter 7. (Section 15A)

Response 420.28

“Safety-related” is the correct term in accordance with the explicit definition in 10CFR50.49(b)(1). “Basic component” defined in 10CFR21 and used in the potentially reportable condition process is equivalent to “safety-related”.

In the past, the term “important-to-safety” was used by GE Nuclear Energy as a synonym for “safety-related”. However, to avoid confusion, this term should not have been used in the ABWR SSAR. The staff did not indicate where this term was found, except that it was “...used in Chapter 7". GE will change such terms to “safety-related” as they become known. Meanwhile, expressions such as “safety essential,”, “essential,” “safety grade,” and “nuclear safety-related” should be considered synonymous with the term “safety-related”.

Question 420.29

For those systems where it has not already been done (example 7.1.1.3.5) clarify whether manual or automatic initiation will be used. (7.1.1)

Response 420.29

The following systems definitions in Section 7.1.1 have been modified to state manual or automatic initiation as indicated below:

Section	System	Initiation
7.1.1.3.1	ECCS	Automatic
7.1.1.3.2	LDS	Automatic
7.1.1.3.5	SGTS	Automatic safety portion
7.1.1.3.6	DG	Automatic
7.1.1.3.7	RCW	Automatic safety portion
7.1.1.3.8	HVAC	Automatic safety portion
7.1.1.3.9	HECW	Automatic safety portion
7.1.1.3.10	HPIN	Automatic safety portion

Section	System	Initiation
7.1.1.4.1	ARI	Automatic
7.1.1.4.4	RSS	Manual
7.1.1.6.1	NMS	Automatic trip to RPS
7.1.1.6.2	PRRM	Automatic trip to RPS
7.1.1.6.4	Not Used	
7.1.1.6.5	WDVBS	Automatic
7.1.1.6.6	CAMS	Continuous/Automatic
7.1.1.6.7	SPTM	Continuous

Question 420.30

Define the word “sufficient” used in section (j). (7.1.2.2)

Response 420.30

With regard to the reactor protection (trip) system (RPS), the statement “...sufficient electrical and physical separation between redundant equipment” means that the system design bases is such that a single event caused by the environment, an electrical transient, or physical event such as a missile, will not disable more than one division of the RPS. In reality, the ABWR RPS 2/4 voting logic could permit a loss of two divisions and still function correctly to scram the reactor.

The following description of the ABWR reactor building design illustrates the electrical and physical separation methods used to accomplish this design basis objective.

Each floor of the ABWR reactor building is sectioned with fire walls dividing the redundant mechanical divisions. The placement of electrical equipment, in general, corresponds to the mechanically separated division assigned to each section (i.e., mechanical divisions A1,B,C and A4 correspond with electrical divisions I,II,III and IV, respectively). Some exceptions are necessary where a given area requires more than one electrical division for sensors or other equipment. (For example, redundant leak detection system sensors may be required to be placed within the same partitioned area.) However, electrical separation is maintained between the redundant divisions.

Because of this partitioned design, it is highly unlikely a single event would affect more than one of the partitioned areas, and thus affect more than one of the redundant RPS divisions. Furthermore, it is not considered credible that a single event could effect more than two such partitioned areas in a manner that could disable more than two divisions of RPS.

Question 420.31
For section 7.1.2.3.2(1)(c,d,e) and (2)(a) define “sufficient”. (7.1.2.3.2)

Response 420.31
In this definition of safety design bases for leak detection & isolation system (LDS) for redundancy, “sufficient” means at least one redundant channel is required to satisfy the single failure criteria. However, for the ABWR design for LDS, at least 2 or more redundant channels are provided to satisfy this requirement.

Question 420.32
The listed design basis should include instrumentation necessary to inform the operator that isolation has been completed and control should provide ability for operator to reset (with adequate safeguards against inadvertently breaking isolation). (7.1.2.3.2)

Response 420.32
The following has been added to Subsection 7.1.2.3.2(1) safety design bases: “Provide interlocks to assure reset capability is only possible after clearence of isolation signals.”

The following has been added to Subsection 7.1.2.3.2(2) nonsafety-related design bases: “Provide status information to annunciator and process computer.”

Question 420.33
Add to 7.1.2.3.2(2)(c)..“without causing plant shutdowns” or reducing safety margins. (7.1.2.3.2)

Response 420.33
Response to this question is provided in revised Subsection 7.1.2.3.2(2)(c).

Question 420.34
For Section 7.1.2.3.7(1)(b) provide a listing of the nonessential parts of the cooling water system which should be isolated. List any nonessential parts for which isolation is not provided. (7.1.2.3.7)

Response 420.34
The non-essential parts of the cooling water system which are isolated are listed in Tables 9.2-4a, b and c. The non-essential cooling loads, which are not automatically isolated, are the CRD pump oil coolers, the CUW pump coolers, the instrument air system coolers and the service air system coolers. These groups of coolers which are not automatically isolated comprise less than 1% of the total heat load during LOCA.

Question 420.35
Is the wetwell to drywell vacuum breaker control manual or automatic? (7.1.2.6.5)

Response 420.35

The wetwell-to-drywell vacuum breaker system (WDVBS) is passive, in that no external power or control is used. When the pressure difference between drywell and wetwell reaches a predetermined setpoint, the WDVBS automatically opens allowing the flow of air back into the drywell thus slowing down its depressurization, and eventually reaching a steady state. For additional information, see Subsection 6.2.1.1.4.1.

Question 420.36

If the CAMS system is only a monitoring system, why is it not always on instead of waiting for a LOCA to monitor radiation? (7.1.2.6.6)

Response 420.36

The CAMS radiation monitoring subsystem continuously monitors the total gamma dose rate in both the drywell and the suppression chamber during normal plant operation, shutdown and accident (LOCA) conditions. This subsystem is manually turned on during normal plant operation for continuous monitoring. In the event that this subsystem has been turned off for any reason, the LOCA signal (high drywell pressure or low reactor water level L1) will automatically turn it back on. CAMS radiation monitoring subsystem is always continuously monitoring for radiation during all plant conditions. See subsection 7.6.1.6 for more information.

Question 420.37

What is the immediate safety action required by relief valve leakage and is it automatic? (7.1.2.6.7)

Response 420.37

SRV leakage can be detected by either (a) high SRV discharge line temperature alarm, (b) SRV not fully closed alarm, or (c) observing the SRV position indication. SRV position indication is provided by a qualified Class 1E position transmitter on each valve. Continuous SRV leakage will result in a rise in the suppression pool temperature.

SRV leakage does not require immediate safety control action and there is no automatic SRV control actions initiated. A high suppression pool temperature will cause the RHR system to automatically initiate suppression pool cooling. In addition, the operator monitors suppression pool temperature. High bulk average suppression pool temperature will be annunciated in the main control room. The operator can initiate supression pool cooling by operating the residual heat removal (RHR) system in the suppression pool cooling mode. If SRV leakages to the suppression pool exceed the cooling capability of the RHR, suppression pool temperature will increase. High suppression pool temperature condition will be annunciated and it would provide an entry condition to the symptom-based emergency operating procedures. According to the BWROG Emergency Procedure Guidelines, Revision 4, approved by the NRC, the operator actions for suppression pool temperature control can be summarized as follows:

(1) Operate all available RHR for suppression pool cooling,

(2) Before suppression pool temperature reaches the boron injection initiation temperature (a curve of suppression pool temperature vs. reactor power), scram the reactor, and

(3) When suppression pool temperature and RPV pressure cannot be maintained below the heat capacity temperature limit (a curve of suppression pool temperature vs. RPV pressure), perform a reactor depressurization.

Question 420.38

The table indicates RG 1.151 applies only to safety related display and Non-1E control systems. Section 7.1.2.10.11 refers to other safety systems including RPS and ECCS. Clarify which systems RG 1.151 is to apply to. (Table 7.1-2)

Response 420.38

Table 7.1-2 is formatted in accordance with the Standard Review Plan in conjunction with the Licensing Review Bases document for the ABWR.

Protection systems (including RPS and ECCS) instruments which require sensing lines are shared, and are contained within the nuclear boiler system (NBS). The NBS conforms with Regulatory Guide 1.151 as described in Subsection 7.7.2.1.2(2).

Question 420.39

The table lists few systems for which RG 1.97 is applicable. Address the RG 1.97 for all categories and variables. (Table 7.1-2)

Response 420.39

Table 7.1-2 is formatted in accordance with the Standard Review Plan and in conjunction with the ABWR licensing review bases document.

The post-accident requirements of Regulatory Guide 1.97 involve instrumentation from many systems within the plant. Signals from these many instruments converge into both safety-related and non-safety-related display systems in the control room. Since Regulatory Guide 1.97 involves only displays, (and the instruments which support them), it is appropriate to address its requirements from the vantage point of the monitoring displays, rather than from each of the C&I systems. We assumed this is why the SRP required that Regulatory Guide 1.97 only needed to be addressed in Section 7.5. We have therefore provided a full assessment of the guide for all categories and variables, in association with the displays and supporting instruments, in Section 7.5.

Question 420.40

The HPCF pump is interlocked (7.3.1.1.1.1(3)(c)) with the undervoltage monitor. If the breaker cannot close will it retry and what information is available to the operator if it doesn't close that would indicate an undervoltage problem? (7.3.1.1.1.1)

Response 420.40
The HPCF pump starting logic waits for the main bus voltage to be available. As soon as voltage is available the starting cycle is initiated, assuming all other requirements for starting the pump have been met. Bus undervoltage alarms are provided in the control room.

Question 420.41
Does the 36 seconds (7.3.1.1.1.1(3)(e)) include time for diesel generator to start? (7.3.1.1.1.1)

Response 420.41
Yes, the start time of the diesel is included in the 36 seconds.

Question 420.42
Section 7.3.1.1.1.1(3)(f) states that separation prevents a single design basis event from disabling core cooling. This section should note that this event must be considered in conjunction with an additional single failure. (7.3.1.1.1.1)

Response 420.42
Subsection 7.3.1.1.1.1(3)(f) has been revised to read: “Separation within the emergency core cooling system is such that no single design basis event, in conjunction with an additional single failure, can prevent core cooling when required.”

Question 420.43
Manual push-buttons are provided to initiate ADS immediately if required. Describe when manual action is required before the 29 second timer actuates ADS. (7.3.1.1.1.2(3)(c))

Response 420.43
Manual actuation of the ADS is not required. The manual actuation switches are included to meed the requirements of Paragraph 4.17 of IEEE-279. The emergency procedure guidelines (EPGs) call for operator action to depressurize the reactor under some conditions by using individual manual control switches which are provided for each of the 18 safety relief valves (SRVs). The manual push-buttons for ADS, which operate 8 SRVs simultaneously, can be considered to be a backup method to individual SRV operations when following EPGs.

Question 420.44
One pressure sensor is used to detect low RCIC system pump suction pressure. Explain the criteria used to justify a single pressure sensor. (7.3.1.1.1.3(4)(a))

Response 420.44
The RCIC is part of the emergency core cooling system (ECCS) network which consists of 3 high pressure systems and 3 low pressure systems. One RCIC and 2 HPCF loops comprise the high pressure ECCS while the low pressure ECCS are the 3 RHR loops.

The subject sensor is located on the pump suction to provide a turbine trip signal on low suction pressure (and eventually stop the RCIC pump).The intent of this instrument is to protect the pump from cavitation. Since RCIC is a single loop, redundant suction pressure instruments are

not necessary. The single failure is based on the loss of one ECCS loop. That is, if RCIC is lost, 5 more ECCS loops are available to perform core cooling. The same configuration is true for BWR6 designs.

Question 420.45

Define analog indication. Is this an analog system or digital simulation? (7.3.1.1.1.3(6))

Response 420.45

For the ABWR, the control room indications are digital. However, all primary sensors (pressure transmitters, level transmitters, flow transmitters, differential transmitters, etc.), are analog instruments. Output signals from the primary sensors are multiplexed and digitized, and then sent to the control room through fiber-optic cables.

Question 420.46

The injection valves cannot be opened at normal pressure. Is this because of interlocks or because of motor size? (7.3.1.1.1.4(3)(g))

Response 420.46

The RHR injection valves cannot be opened at normal reactor operating pressure 7.19 MPaA for both reasons. A pressure interlock prevents the valve from opening above a low pressure value (approximately 3.01 MPaG), and the specified valve operating differential pressure is approximately 3.80 MPaD.

Question 420.47

Is the suppression pool cooling automatically initiated? The SAR describes the system as being used to reduce the suppression pool temperature immediately after a blowdown. Section 5.4.7.1.1.5 indicates automatic initiation. (7.3.1.1.4)

Response 420.47

The suppression pool cooling mode of the RHR System is initiated automatically but may be manually initiated by the operator.

Subsection 5.4.7.1.1.5 of the SSAR has been rewritten and Subsection 7.3.1.1.4 has been revised to reflect both automatic and manual initiation.

Question 420.48

SAR 7.1.2.1.6(2) appears to define “fault” as the “...inability to open or close any control circuit.” Explain the basis for this definition and the extent of its use in the FMEAs. Are there any other potential failure modes excessive time to close a circuit? (7.1.2.1.6)

Response 420.48

There are two types of operations for the self-test subsystem (STS). Paragraph (1) of Subsection 7.1.2.1.6 describes the on-line STS and Subsection (2) describes the manually-initiated off-line STS.

The "fault" definitions in (1) and (2) differ slightly in that (2) also exercises the trip outputs. Neither definition specifically includes a time-delay test. However, any excessive time delays in either test would be detected as a fault since the test system must cycle from circuit-to-circuit very rapidly (i.e., in the order of milliseconds).

FMEAs for the reactor internal pump (RIP), the multiplex (MUX) and the fine-motion control rod drive (FMCRD) systems are included in Section 15B.4. Portions of the SSLC are included in the FMEA for the MUX. We do not intend to perform separate FMEAs for the STS alone.

Question 420.49

Describe the fault tolerant features of the digital design. Describe the types of faults that are tolerated by these design features. Show how these features would respond to various faults, and show that the effectiveness of the safety system is not compromised. (7)

Response 420.49
Fault Tolerant Features:

- Hardware:

  (1) Four-division replication of sensors and logic with 2-out-of-4 voting to confirm trip in each division.

  (2) Division-of-sensors bypass results in 2-out-of-3 voting.

  (3) Division logic bypass for de-energize-to-trip funtions results in 2-out-of-3 voting at trip channel outputs

  (4) Redundant (dual channel) multiplexing in each division with automatic reconfiguration and restart.

  (5) Energize to trip functions are implemented in redundant channels with 2-out-of-2 voting for confirmation; fails automatically to 1-out-of-1 to maintain availability.

  (6) Allocation of fail-safe (RPS, MSIV and other PCV isolations) and fail-as-is (ECCS, Aux. ESF) functions to separate microprocessors within each division.

  (7) Physical separation of divisional instruments prevents damage to redundant instrument loops.

- Software:

  (1) Empty memory filled with jump-to-reset instructions.

  (2) Error checking/correcting of inputs and outputs.

  (3) On detected fault, retry or roll-back to last known correct state.

(4) Continuous self-diagnostics with auto-switchover to good channel.

Types of Faults Tolerated

Hardware:

(1) Single failure in any division, including inadvertent trip and loss of power.

(2) Loss of digital trip logic in any division; can use maintenance bypass for on-line calibration or repair.

(3) Single failure of essential multiplexing system in any division with no effect on safety system operation.

(4) Single failure of logic channel in any division with no effect on system operation.

(5) Single failure without accidental trip.

(6) Failure of some system functions will leave others unaffected.

- Software:

(1) Restart without lockup on fault such as EMI.

(2) Detects and corrects data transmission errors with no effect on system operation.

(3) Attempts to continue operation through transient fault.

(4) Attempts to continue operation through permanent fault.

(5) Software transient in any single microprocessor will not cause or prevent reactor trip, nuclear system isolation, or ECCS initiation.

(6) Detects failures of plant variables produced by process transmitters or transducer elements through reasonability and range checking.

System Response to Faults

As described above, the safety system is not compromised by faults because of the multi-divisonal logic configuration and 2-out-of-four coincidence logic in each division. Therefore, single microprocessor instrument failures or some multiple failures within a single division, whether they result in tripped or untripped states, will not result in improper system response.

Question 420.50

Describe the self-diagnostic features of the computer-based safety system. Describe the diagnostics that are run on-line, in a background mode and in a maintenance mode. Describe what happens when an on-line diagnostic uncovers an error in the computer system. (7.1)

Response 420.50

The self-test subsystem (STS) is described as the "sixth test" in Subsection 7.1.2.1.6. Additional information is provided in Appendix 7A, Section 7A.2, Responses (6) and (14).

Question 420.51

Describe the data buses that are used in the multiplexers. Describe the features that are implemented to ensure that the bus or multiplexer is not cause of a single point failure. Describe what happens when a single card on a data bus fails. Show what design features prevent the error from propagating and not challenging the remainder of the safety system. If specific equipment has not been selected, please provide the interface criteria. (7.1)

Response 420.51

The data buses that are used in the multiplexers are of two types: (1) The fiber optic links between multiplexers, and (2) the data pathways from the multiplexer bus interface units to their associated input/output system or application processor for a remote multiplexer data station or control room multiplexer data station, respectively. For clarity, the bus interface unit is frequently referred to as the "node" of a data station of a control data network, while the input/output system or application processor is referred to as the "host" of the data station. The data buses therefore consist of (1) the network links between nodes, and (2) the links between nodes and their respective hosts.

As described in the response to question 420.20, divisional redundancy and electrical separation and independence design criteria prevent random failures of a control data network equipment reliability and availability.

These latter improvements are provided in each division through selected redundancy and system reconfiguration capability. Redundancy is provided for both the fiber optic links between multiplexers and the multiplexer bus interface units each division. Two control data networks, each with their own fiber optic links and bus interface units, therefore, are provided for transmission of intradivisional signals.

Redundancy is not required, however, for the links between the redundant bus interface units (nodes) and their associated input/output system or application processor (host). This is because the input/output system or application processor itself is not generally redundant (within a given division of instrumentation and control), and because of its higher parts count, has a lower reliability than the data bus connecting it to the bus interface units. The data bus is left to be specified during the detailed design of the procured equipment, and may be either redundant serial links or a shared parallel bus, as examples.

Because the data bus connecting the redundant multiplexer bus interface units to the input/output system or application processor is not necessarily redundant, there is potential, though of relatively small probability, for the failure of a card interfacing with this data bus to cause the loss of the entire data station. System reconfiguration is provided, however,

independently within both of the redundant control data networks to drop out the failed station. The control data networks continue to operate with all data stations except the failed one.

Failure of a card must therefore propagate through the data bus between the input/output system or application processor to the bus interface unit(s) to fail the entire data station, including functions of both the redundant nodes and their associated host. Furthermore, control data network reconfiguration must fail in order for the card failure to propagate to the entire intradivision multiplexing network. This is the most severe, but unlikely outcome of the initiating random card failure. In any event, however, it is not possible for the failure to propagate to another safety division, and capability to perform safety related functions is unaffected despite the single error.

The interface requirements, therefore, are those features described above; that is, redundancy of fiber optic links between multiplexers; redundancy of bus interface units with associated provision for each to communicate to and from the process input/output system or application processor; and capability for control network reconfiguration to drop out a failed bus interface unit (or data station). These requirements apply to each division separately. Furthermore, there are requirements for electrical independence and separation, as well as for autonomous and asynchronous control, of the multiplexing systems in the different divisions, as discussed in response to question 420.20.

Question 420.52

As indicated in the October 1987 ABWR presentation, the self-test sequence of the digital processor equipment is supposed to reduce the need for surveillance and monitoring by human personnel. Describe how it was proven that the old and new surveillance schedules are functionally equivalent.

Response 420.52

As indicated in the response to Question 420.72, the self-test system sends a signal to the annunciator and the process computer upon detection of failures within the hardware or software. Thus, the need for surveillance and monitoring by human personnel is reduced, in some areas within the technical specifications, compared with that required for systems not employing self-test.

The suggested surveillance technical specification intervals for the ABWR are based on studies with operating plants and the BWR Owner's Group. Where there are differences with respect to the “old” surveillance schedules, the rationale can be found in Chapter 16 in the bases to the technical specifications.

Question 420.53

Is a diverse (hardware implemented) watchdog timer provided in the design for detecting system stall? (7)

Response 420.53

A hardware watchdog timer is implemented in each controller of SSLC and the multiplexing system; the timer detects stall within that controller. Thus, a hardware or software fault can be detected and alarmed at a particular system unit without bringing down the entire system.

For example, an individual Trip Logic Unit can be taken out of service on a watchdog timer alarm (using the appropriate bypass function) without disrupting operation of the digital trip module and its communication with the other divisions.

The individual watchdog timer outputs permit differing responses to component failure. Certain timer outputs may cause automatic bypass of a logic channel; others result only in an alarm indication to the operator. Typical responses are as follows:

(1) RPS DTM—Alarm output to operator; manual division-of-sensors bypass reverts remaining logic to 2/3.

(2) ESF DTM—Same as above.

(3) RPS TLU—Alarm output to operator; manual bypass reverts ouput logic to 2/3, while input logic remains 2/4 (DTMs are all assumed operable).

(4) ESF SLU 1 & 2—Alarm output of either SLU 1 or SLU 2 results in automatic bypass of the failed channel at the 2/2 voter (load drivers). Bypass means that load driver of the failed channel is energized. Alarm output to operator is provided, with manual bypass as a backup to the auto function.

Question 420.54

Does the FMEA consider unusual failure modes and their effects such as system stall, interruption and restoration of power (or function), metastability, or timing errors? Provide a descriptive summary of the failure modes addressed in the FMEA or describe the interface criteria. (7)

Response 420.54

This response addresses the FMEA for the essential multiplexing system (EMS) (see Section 15B.4).

The only two failure modes that need be considered for the EMS are 1) corruption of the signal due to failure of EMS equipment, and 2) loss of signal due to failure of EMS equipment (or power). Such failures could also occur due to severed fiber optic cable and/or misalignment of junctions. These failure modes are analyzed in Section 15B.4.

Graceful degradation is a design feature of I&C microprocessor equipment that causes safe-state output responses to unusual failure modes such as system stall, interruption and restoration of power (or function), metastability and timing errors. This feature is implemented in both

hardware and software. Thus, unusual failure modes can be considered to be part of the hypothesized failure modes analyzed in the FMEA.

Watchdog timers detect system stall or timing errors and cause an INOP output for the failed channel. The same type of trip occurs on loss of power to any given channel. When the effects of these trips are propagated to the Safety System Logic & Control equipment, channel input trips will occur. These trips (fail-safe for RPS and fail-as-is for ECCS) force a “half-trip” condition of the 2-out-of-4 coincidence logic for the given channel and simultaneously alert the operator via the annunciators and process computer. The operator may then opt to bypass the failed channel, which causes the logic to revert to 2-out-of-3. Only one channel may be bypassed at any given time.

The power-on logic ensures known and acceptable initial conditions after restoring instrument or system power or inserting a card with power on. On interruption of power and restart, the microprocessor-controlled logic resets to the start of the control program. Time delays are not activated upon application of power. Outputs depend only upon sensed inputs. If downstream processors receive erroneous inputs (based on self-checking within each instrument), then the INOP trip described above will be generated by those processors.

Question 420.55

Provide a summary of any graceful degradation features provided in the I&C systems or describe the interface criteria. (7)

Response 420.55

Test facilities in the control room monitor data transmission of the essential multiplex system (EMS) to ensure that data transport, routing and timing specifications that are out-of-tolerance for a particular input signal will result in an INOP trip condition for that input into the trip logic processors of SSLC. The SSLC will cause protective function activation upon receipt of inoperative signals caused by hardware or software failure of system instruments. The SSLC Self-diagnostics also causes protective function activation when software or hardware failures are detected.

Upon loss of AC or DC power, functions which are normally energized, such as reactor trip and main steam line isolation, will provide fail-safe trip action. For such functions, loss of power to a sensor, its channel, or associated logic automatically produces a trip output. For normally de-energized functions, such as emergency core cooling, the same failures will leave the state of the actuated equipment unchanged. The system is also designed such that subsequent restoration of power does not introduce transients that could cause a change of state in the actuated equipment.

Additional information is available in Appendix 7A, and in the safety system logic and control system design specification (Subsection 1.1.3).

Question 420.56
Demonstrate that the effects of hardware and external failures on software performance have been sufficiently addressed in the FMEA or describe the interface criteria. (7)

Response 420.56
The answer to this question is included in the response to Question 420.054. In particular, a component failure (integrated circuit or passive part) will result in loss or corruption of data as described in the FMEA. Whether the erroneous data results from associated software failure or damage to the signal path, the effect on downstream processors is the same. External failures are also sensed as erroneous data and will be treated as described previously.

Question 420.57
What provisions have been made in the design process to preclude the introduction of a software virus that could affect the system when operational? (7)

Response 420.57
As indicated in the responses to Questions 420.25 and 420.21, no safety action is dependent on computations from the central processor. The control programs for SSLC are contained in ROM as firmware. Software instructions such as setpoints, etc., are not programmable in the field, but are burned on individual chips in the factory before shipment. This is considered to be adequate safeguard against the introduction of software viruses.

Question 420.58
Beyond the redundancy requirements levied by single failure criteria, provide information to demonstrate sufficient diversity in the I&C system to preclude common mode failures. (7)

Response 420.58
In response to this question, refer to Appendix 7A, Section 7A.7 under the heading: “Items 7A.5(4) and 7A.6(4)”.

Question 420.59
Describe the methods which are used to assure that equipment which is not qualified for all service conditions will not spuriously operate during exposure to conditions for which the equipment is not required to function to mitigate the effects of accidents or other events. (7)

Response 420.59
The non-safety feedwater, recirculation flow and turbine control systems utilize triplicated control channels with middle-value voting. This means that a spurious signal from one of the channels, which differs from the other two channel outputs, will be disregarded by the controller.

The Class-1E safety systems are entirely separated from the non-1E control systems such that spurious initiation of non-safety systems has no adverse impact on safety functions.

Question 420.60
Provide examples for section (g) which meet the design bases. (7.1.2.2)

Response 420.60
The origin for this design basis is Section 4.7.3 of IEEE-279. However, the statement in (g) was less conservative as originally written because it did not mention the degredation of a second random failure. Therefore, (g) has been revised to agree with IEEE-279 more precisely.

The ABWR reactor protection (trip) system is designed with 2/4 voting logic, and is electrically isolated and physically separated from the plant control systems [see Subsection 7.2.2.2.3.1(7)]. In addition, the feedwater, recirc flow, and turbine control systems utilize fault tolerant (middle value voting) triplicated instrument channels in their control schemes (see Section 7.7). As such, there are no single random failure scenerios which could cause a control system action that causes a plant condition that requires a reactor scram, but also prevents action by some RPS channels. (See Subsection 7.1.2.10.11 relative to instrument lines.)

The system has also been designed to protect against multiple failures resulting from a credible single event (Section 4.7.4 of IEEE-279). This scenerio is discussed in Subsection 7.2.2.2.3.1(7).

Question 420.61
Explain section (h) further. Does this mean one 480V bus, 4160 bus the generator? Same question at 7.2.3.2(2)(b). (7.1.2.2)

Response 420.61
[Assumption is made that second sentence should say "...4160 bus or the generator?" It is also assumed the reference to "7.2.3.2(2)(b)" should be "7.1.2.3.2(2)(b)".]

The electrical distribution system has three completely separate and redundant divisions of 6.9 kV buses. However, the fourth division 480 volt AC bus receives power from the Division I 6.9 kV AC bus. There are also four completely separate and redundant 125 Vdc battery buses.

The RPS logic actuates on any 2-out-of-4 "fail-safe"(logic "0") signals. Power for the RPS and other ESF systems comes from the 4-divisional safety system logic and control (SSLC) power buses. Thus, loss of any one bus or power source (i.e., 6.9kV bus, 480 bus, diesel generator, or battery) would not result in an inadvertant scram nor a failure to scram when required. This is further explained in Section 7.2.

The leak detection and isolation system (LDS) utilizes various portions of all four buses depending on the power supplies for the isolation valves with which it interfaces [See Subsection 7.3.1.1.2(2)]. No single failure of any power source will result in failure to isolate a pipe system when needed. See Subsection 7.3.1.1.2 for more details describing the LDS system and each of its individual isolation functions.

Question 420.62

Provide justification for going to a 2/3 scram instead of 1/3 when one is bypassed. (7.1.2.10.11)

Response 420.62

A degree of redundancy of one (e.g., 1-out-of-2, 2-out-of-3, 3-out-of-4, etc.) for scram voting logic has always been considered as acceptable and sufficient to provide compliance with the redundancy requirements necessary to satisfy the Single-failure Criterion.

During normal operating conditions, the reactor protection system (RPS) utilizes scram voting logic with a degree of redundancy of two, i.e., 2-out-of-4 (2/4). The use of 2/4 voting logic improves RPS reliability, i.e., the probability that the RPS will successfully initiate a reactor scram when required. Yet, because 2/4 scram voting logic is more reliable than 2/3 scram voting logic, there is a slight penalty attached. With 2/4 scram voting logic, the potential of inadvertent scram, due to random spurious events in the four instrument channels, is about twice as high as that with 2/3 scram voting logic. However, both the 2/4 and 2/3 voting logic methods have adequate spurious trip avoidance probabilities and no single failure can cause an inadvertent scram.

By design, any one of the four instrument channels may be bypassed for the purpose of instrument channel maintenance whenever there is a requirement for replacement, repair, test, or calibration of components of that instrument channel. Such bypass renders inoperable, as far as scram function is concerned, the entire set of sensor instruments associated with that instrument channel. Thus, the normal 2-out-of-4 RPS scram voting logic becomes 2-out-of-3 when a single instrument channel bypass condition exists. Three independent instrument channels are still operable and available during the single instrument channel bypass condition and, as indicated previously, 2/3 scram voting logic provides the minimum degree of redundancy of one, which is necessary and sufficient to satisfy the redundancy requirements arising from the Single-failure Criterion. By requiring trip conditions to exist in at least two of the three instrument channels also assures that, even during periods of maintenance bypass, no single failure can cause an inadvertent reactor trip. Plant availability is actually enhanced while 2/3 scram voting logic is in effect, and yet the RPS reliability is acceptable, that is, can be demonstrated to be adequate, during the periods of time of instrument channel maintenance bypass.

The alternative method, during the period of time necessary for maintenance bypass, of retaining the degree of redundancy of two, i.e., having normal 2-out-of-4 scram logic revert to 1-out-of-3, is not only unnecessary but would be imprudent. To convert to 1/3 scram logic, while the instrument channel bypass is in effect, would require the initiation of protective action trip signals for that bypassed channel for all variables associated with the bypassed instrument channel. Such action would significantly increase the risk of inadvertent scram to an unacceptable level as then any single failure associated with any parameter in any of the three operable instrument channels could result in reactor scram.

Such a requirement, i.e., to revert to 1/3 scram logic, should only be necessary if the period of time for individual channel maintenance becomes excessive and such maintenance is required to continue beyond some reasonably established time period.

It should be noted that only one of the four instrument channels is permitted to be bypassed at any given time. This is both administratively and automatically interlock controlled. Any potential faulted operational condition, where a degree of redundancy of zero, e.g., 2-out-of-2, might temporarily exist, must immediately be corrected such that a minimum degree of redundancy of one is reestablished.

Administrative controls regarding bypass of RPS channels may be found in the technical specifications in Chapter 16.

Question 420.63

What are the reliability/availability goals for the reactor protection and engineered safety features systems? (7)

Response 420.63

Reliability/Availability Goals—The ABWR RPS and ESF functions were to incorporate the performance features and equipment reduction advantages of the digital, multiplexed design while providing at least the reliability and availability of BWR/5 designs. Particularly with the RPS design, these goals were easily met because of four division, 2-out-of-4 configuration used.

For I&C equipment, studies have shown that the following reliabilities and availabilities are achievable when using equipment with the following failure characteristics (numbers for MTBF are meant to be very conservative figures; much higher MTBFs are known to be achievable in this type of equipment):

- Individual controller: MTBF - 100,000 hours
  Essential Multiplexing System: MTBF - > 100,000 hours per channel
  All equipment: MTTR - 4 hours
  Probability of detecting equipment failure - 0.95

- RPS
  Availability (4 div.) A = 0.999997
  Reliability an order of magnitude better than BWR/5 (extra degree of redundancy for A and B trips)

- ESF
  Availability A = 0.99881 per ESF division

Question 420.64

Describe the reliability model and assumptions used to demonstrate achievement of the reliability goals; this should include a description of the system architecture. (7)

Response 420.64
The reliability model and assumptions used to demonstrate achievement of the reliability goals are based on the principles and guidelines of IEEE-352.

The system architecture is described in Appendix 7A, Section 7A.2, Responses (10) and (11).

Question 420.65
What methodology is used in determining the system reliability/availability? (7)

Response 420.65
Reliability Methodology (follows ANSI/IEEE-352):

(1) FMEA for Essential Multiplexing System

(2) Probabilistic Risk Assessment (PRA) for Safety System

(3) Quantitative Analysis (assumed NUMAC-type instrumentation)

  (a) Manual Calculation

  (b) Computer Calculation (Markov Models for Essential Multiplexing System)

Question 420.66
Describe the data validation features in triplicated sensors. (7)

Response 420.66
The safety systems use quadruple and not triplicated sensors, one set in each of the four protection divisions. Within each division, data is first validated after the analog to digital conversion process in the remote multiplexing units. Converted signals must fall within the full scale analog range of 4-20 mA; otherwise a gross failure of the sensor is assumed. Digital inputs (contact closures) are filtered and de-bounced to eliminate transient signals.

The formatted digital words are assembled with parity bits and checksum or CRC bits before transmission from the local areas to the control room over the essential multiplexing system. The control room multiplexing units (CMUs) then check transmission quality over the dual channel multiplexing network, where one channel is considered the master channel (normally on-line) and the other, the standby channel. Transmission checks typically include frequency of checksum errors and hardware self-test results. At some predetermined error rate, data is taken from the standby channel instead of the master channel. Transfer of data from the CMUs to the SSLC logic processors is checked in essentially the same manner.

For a manual check of data plausibility, equivalent sensor data from the four divisions can be compared in the control room logic processors (data is exchanged among the divisions through isolated serial communication links).

Question 420.67

What testing will be done to demonstrate reliability? What is the specific scope of these tests? (7)

Response 420.67

Testing of safety system logic and control (SSLC) includes integration testing of the hardware and software of each controller and system testing of the interconnected network of controllers, including the fiber optic essential multiplexing system.

Specific testing will check conformity to the system design specifications. Both normal and abnormal responses to input stimuli will be monitored by injecting a defined sequence of test patterns. Test patterns will simulate the various modes of each processed systems as defined in its respective design specification and interface block diagram (IBD). Responses to trip conditions in each division will confirm 2/4 coincidence logic. Appropriate fail-safe and fail-as-is response will be noted, including response to power failure. (See Appendix 7A, Section 7A.2, Response 8, for dicussion of system response following power failures.)

Reliability testing: EMI/RFI/ESD, power transients, environmental (temp., RH), seismic, radiation, system burn-in, V&V of software.

Degraded mode testing will be performed. System response to multiplexing system failure will be monitored.

Response to manual control switch inputs will be tested.

Sequence of events monitoring will be verified.

Test inputs will include the full range of sensor types. Interlock permissives from motor control centers and valve limit switches will be simulated for testing under realistic conditions.

Question 420.68

What is the effect upon the number of spurious trips generated by the RPS if the digital design replaces the previous analog design? Provide comparison.

Response 420.68

The digital RPS reduces the number of spurious trips when compared to previous analog designs mainly because of the 2-out-of-4 input coincidence logic and 2-out-of-4 output coincidence logic required for a valid trip condition. This arrangement permits both a bypassed division due to a single failure and a single failure in another division to exist simultaneously without causing a trip.

Other factors for digital over analog:

(1) Low drift

(2) Low noise

(3) More accurate

(4) Fewer components

Question 420.69

Identify what limitation on application of new technology have been defined for the RPS design. Are all types of digital technology acceptable for this application? What limits the technology application and what are the performance parameters used to constrain the new technology application? (7)

Response 420.69

Advanced technology has been applied to RPS and overall safety system design for ABWR in order to produce a system that is more compact, more reliable, more accurate, and more responsive than analog/relay designs.

Previous experience with the Clinton Nuclear System Protection System (NSPS) proved that discrete, solid state, logic gates could provide a simple and testable replacement for RPS relay logic. However, this implementation required the use of several hundred printed circuit boards in the four protection divisions. The large quantity of equipment affected system reliability and required a complex, external, self-test system to ensure adequate availability (by fast detection and localization of circuit faults)

Investigations into the use of more advanced technology for ABWR RPS logic (part of Safety System Logic & Control) showed that significant cost savings and performance improvements were possible if locally digitized plant variables were multiplexed over fiber optic cables to the control room. The multiplexed data would be processed in microprocessor-based logic equipment controlled by software residing in non-volatile memory (“firmware”). Control signals would also be multiplexed from the control room to the actuators of driven equipment for many systems. This type of configuration would greatly reduce the amount of processing equipment and cabling by replacing hardware logic with a software-based design requiring fewer integrated circuits.

RPS and other safety systems for ABWR based on the above configuration remain independent of plant control or computer systems; digital processing of sensor data for possible trip action is contained within the safety-grade boundaries of the protection divisions. Control systems or the process computer do not provide inputs to safety system logic.

In addition to multiplexing and microprocessor-based logic processing, application of advanced technology is limited to fault-locating self-diagnostics, auto-calibration, manual (semi-automatic) surveillance functions, graphical operator displays, and flat panel touch screens that replace most hardware switch functions. Plant automation features using expert systems or other computer-controlled processes are not applied, since they are unnecessary for standby

systems that ordinarily do not require any operator action (automatic trip and initiation conditions are well-defined and do not change over time). Emergency operator action is provided by direct, hardwired switches external to software logic (for example, manual scram).

At the equipment level, the basic constraint on new technology application for safety systems is the need to provide advanced performance features while preserving long term reliability and availability of the basic trip functions (at least equal to that of the original designs). While almost any existing microprocessor or other VLSI technology can implement safety system functions,the following constraints on state-of-the-art technology were considered necessary to achieve a practical design:

Hardware/Software Constraints

(1) *[Proven technology—must have failure rate history to support reliability goals. Advanced component designs, such as reduced instruction set computer (RISC) processors, application specific integrated circuits (ASICs), gate arrays or programmable logic devices (PLDs) have a limited design history and unknown future support.]**

(2) Not obsolescent—reasonably expected to be supported by vendors for several years with upgrading possible.

(3) Second sources—affects availability of spare parts.

(4) Components should be available in high reliability versions.

(5) Maintainability—easily replaced modules, memory chips insockets for expansion or upgrading.

(6) Software support for hardware—appropriate development tools and compilers must be available for desired language and processor.

(7) Programming language chosen should permit top down, structured, modular design and should result in easily readable source code.

(8) Testability—automatic testability must be provided for logic inaccessible to manual surveillance and test methods.

(9) Heat dissipation—equipment should require lowest power for required speed, preferably lower than previous designs. Sufficient panel space is available such that the highest density electronic packaging is not required.

* See Section 7A.1(2).

Performance Constraints

(1) Robust design (power-on initialization without transients, power-down reset to safe state, immunity to noise and common-mode failures, operability in design basis thermal and seismic environments) is more important than the ability to support large memory arrays or perform complex calculations.

(2) Speed should be minimum needed to support data throughput; faster speeds result in noise problems and require complex error detection and correction methods.

This response addresses the question of developing an approach for determining equipment changes that can be made after design certification without changes to the certification and without NRC review.

The basis for reliable design of safety system components will be conformance to Regulatory Guide 1.152, which endorses ANSI/IEEE-ANS-7-4.3.2-1982 (Application Criteria for Programmable Digital Computer Systems in Safety Systems of Nuclear Power Generating Stations). The methodology described in this standard establishes a program of independent verification and validation (V&V) for confirming correct implementation of integrated hardware and software. The V&V program will be used after design certification during the actual hardware and software implementation phases to verify and document all steps of the design and testing process. During final validation testing, acceptance criteria shall confirm correct operation of the completed system with regard to design specification requirements.

Design certification addresses system level design down to the hardware/software system specification level. A vendor may implement these functional requirements using different combinations of hardware and software. For example, because of hardware response time requirements, a certain function shown as originally being a software process in the system documents may be designed using discrete logic. Many other changes will be made because of cost, component availability and prototype test results. The structured design process, including design reviews, the V&V program and the overall Quality Assurance program, will ensure adherence to the intent of the design specifications. This development process will include provisions for meeting independence, separation and defense-in-depth requirements no matter what technology is used. In addition, all safety-related components will be qualified to the appropriate standards.

In general, only system level changes that alter the inputs and outputs or modify basic parameters, such as trip levels and response times, should be changes to design certification or NRC review.

Question 420.70

Is there any system for in-service testing of the ARI? (7.1.2.1.6)

Response 420.70
Yes. The design of the ARI function incorporates testability, up to, but not including, the ARI valves, per the requirements of LTR NEDE 31906-P-A.

Question 420.71
Is the CRD scram discharge high water level used as the example of the fifth test valid given that there is no scram discharge volume?(7.1.2.1.6)

Response 420.71
The reference to scram discharge volume was in error. Subsection 7.1.2.1.6 has been revised accordingly.

Question 420.72
Section (1) of 7.1.2.1.6 states that normal surveillance can identify failures. Discuss whether this system has the capability of transmitting this information to the plant computer so that an immediate alarm can be given in addition to waiting for the scheduled surveillance. (7.1.2.1.6)

Response 420.72
The statement concerning “normal surveillance” applies to intermittent failures for which the STS is capable of detecting and logging without stopping system operation. All other self-test failures (except intermittent failures) are annunciated to the operator at the main control room console and logged by the process computer.

Question 420.73
Section (4) notes that the four divisions are tested in sequence. When the thirty minute sequence is complete does the test system start over again or is this an operator initiated test? (7.1.2.1.6)

Response 420.73
In the section referenced, the test starts over again automatically; testing is continuous.

Note that the concept of automatic self-test, as applied to ABWR safety systems, has changed since this section was written. The tests described are similar to the Clinton nuclear system protection system (NSPS) arrangement, which used an external test controller to periodically inject narrow pulses into the logic inputs and monitor the resulting outputs at the load drivers (the narrow pulses were too short to fully turn the load drivers off or on). NSPS functional logic was implemented with discrete logic gates and was static (not clock driven). The periodic, end-to-end, cross-divisional testing was necessary to confirm system continuity and verify the integrity of logic inputs and outputs and 2-out-of-4 interdivisional wiring.

The ABWR design for SSLC permits a different approach to testing of safety system logic:

(1) The real-time, microprocessor-based, software-driven controllers contain powerful, internal, self-diagnostics that perform continuous monitoring of program flow, voltage levels, and inputs and outputs.

(2) Serial, multiplexed, data communication allows continuous error checking and correcting of all transmitted and received data.

(3) System functions are distributed among several microprocessor-based chassis. Bypassing permits various controllers to be removed from service for maintenance without affecting system operation. Internal self-diagnostics permit continued testing of the remaining controllers. An external tester would require interruption or complex reconfiguration to continue operation.

(4) Experience with GE's NUMAC instruments has proven the reliability of software diagnostics running as a low controls which assure this.

Response 420.74

A separate manual keylock switch in each of the four divisions provides means to bypass that division. Isolated fiber-optic interface signals provide interlocks between the four divisions to prevent bypass of any two or more divisions at the same time. Once a bypass of one division has been established, bypasses of any of the remaining three divisions are inhibited.

Question 420.75

For section 7.1.2.2(j) clarify that the physical and electrical separation does not preclude the proper environmental qualification of redundant I&C equipment. (7.1.2.2)

Response 420.75

All I&C equipment associated with the reactor protection system scram function, and all other safety-related functions, is qualified both seismically and environmentally (Sections 3.10 and 3.11), to Class-1E standards. The qualification requirements of such equipment are independent of the separation requirements imposed on the redundant channels of the systems which utilize the equipment.

Question 420.76

For subsection 7.1.2.3.2(1)(c,d,e) and (2)(a) define “sufficient”. (7.1.2.3.2)

Response 420.76

This question should be deleted because it is the same as Question 420.31.

Question 420.77

One of the reasons stated for the utilization of microprocessors for the implementation of instrumentation and logic functions is that less uncertainty exists in the margins between actual safety limits and the limiting safety trips. The margins are stated to be set from experimental data on setpoint drift (see Section 7.1.2.1.4.1) and from quantitative reliability requirements for each system and its components.

Provide the documented bases for this procedure. (7.1.2.1.4.1)

Response 420.77

Setpoint drift does not exist, since the setpoints are programed digitally into non-volatile data storage memory in the digital trip module.

Accuracy is improved over analog systems since setpoints can be programmed precisely and in engineering units.

Trip point accuracy is improved since the digitized sensor signal is compared precisely with the digital setpoint.

Hysteresis is adjustable in small increments and is stable. Upscale and downstage trip points can be accurately programmed.

The digitized sensor signals are accurate to the appropriate linear or non-linear characteristics since the A/D converters and amplifiers use auto-zeroing and auto-calibration.

Question 420.78

One of the reasons stated for the utilization of microprocessors for the implementation of instrumentation and logic functions is that less uncertainty exists in the margins between actual safety limits and the limiting safety trips. The margins are stated to be set from experimental data on setpoint drift (see Subsection 7.1.2.1.4.1) and from quantitative reliability requirements for each system and its components. (7.1.2.1.4.1)

Will this procedure be a topical report used as a design tool?

Response 420.78

The ABWR utilizes the design specifications, integration procedures, implementation procedures and analysis reports as bases for the design, rather than topical reports. These documents are referenced in Subsection 1.1.3.

Question 420.79

One of the reasons stated for the utilization of microprocessors for the implementation of instrumentation and logic functions is that less uncertainty exists in the margins between actual safety limits and the limiting safety trips. The margins are stated to be set from experimental data on setpoint drift (see Subsection 7.1.2.1.4.1) and from quantitative reliability requirements for each system and its components.

What experimental data has been used to provide inputs to this design approach? (7.1.2.1.4.1)

Response 420.79

The term “experimental data” is misleading in this context, and Subsection 7.1.2.1.4.1 has been changed to “historical data”.

Section 4.4 of NEDC-31336 “General Electric Instrument Setpoint Methodology” discusses historical data accumulated from three operating plants amounting to approximately 9 reactor-

years of experience. The plants involved were Peach Bottom, Grand Gulf and Nine Mile Point 1. These plants utilize transmitters similar to those of ABWR. However, the data associated with analog trip devices of earlier plant designs is very conservative compared with the ABWR. This is because setpoint drift is non-existent in the Digital Trip Modules Question 420.77. The MUX system introduces a slightly lower accuracy than the hard-wired designs, but the overall uncertainties in the margins are significantly improved.

The details for setpoint methodology specific for the ABWR may be found in the "Instrument Setpoints Design Requirements" document identified in the reference in Subsection 1.1.3.

Question 420.80

Section 7.1.2.3.1(1)(c) states that no operator action is required for 10 minutes following LOCA. Section 6.3.1.1.1(3) states, that no operator action is required for 30 minutes after an accident. Section 6.3.2.8 also states 30 minutes. Clarify which statement is the design basis. Same question @ 7.3.1.1.1.4(3)(i) and 7.3.1.1.1.2(3)(i). (7.1.2.3.1)

Response 420.80

Subsections 7.1.2.3.1(1)(c), 7.3.1.1.1.2(3)(i), and 7.3.1.1.1.4(3)(i) of the SSAR have been revised from 10 minutes to 30 minutes.

Question 420.81

Section 7.1.2.3.1(1)(c) states that operator action is not required. Describe what operator actions are desired but not required for the first period of time (10 or 30 minutes) for various accident scenarios. (7.1.2.3.1)

Response 420.81

The 30 minutes that no operator action is required is a backup to expected operator actions performed normally in response to encountered events. Normally an operator would take actions in accordance with the symptom-based Emergency Operating Procedures. The following discussion outlines the expected operator response to the accidents identified.

For this discussion, accident scenarios can be classed in the general categories of large breaks or medium/small breaks inside containment or breaks outside containment.

Large Breaks Inside Containment—The drywell pressure will rise rapidly and all ECCS systems will automatically initiate on high drywell pressure within a few seconds, including diesel generator automatic start-up. RCIC and HPCF begin injection without reactor pressure vessel (RPV) depressurization. The RHR initiates by starting the pump, but RHR injection requires that the RPV be depressurized to below a specified pressure. The operator would confirm these events, and attempt manual starts for any subsystem that did not automatically start.

With a large break the RPV will depressurize rapidly, allowing the RHR in the flooding mode to automatically inject into the RPV along with the RCIC and HPCF. The operator should

monitor reactor water level and primary containment parameters such as suppression pool water level and temperature, drywell pressure and temperature, and containment pressure and temperature. If reactor water level increases as a result of ECCS injection, RCIC and HPCF injections will automatically shutoff when RPV level increases to level 8 if no operator action is taken. RHR does not have an automatic shutoff feature on a level 8 signal. To prevent filling the steamlines, the operator should stop some or all RHR injection prior to RPV water level reaching level 8.

Once a RHR loop is not required for RPV level control, it can be applied to other tasks. These tasks can be direct suppression pool cooling, drywell pressure/temperature control (drywell spray), containment pressure/temperature control (wetwell spray), and suppression pool level control, as directed by the symptom-based Emergency Operating Procedures.

Medium/Small Breaks Inside Containment— Drywell pressure will increase rapidly, but slower than for large breaks, and RCIC, HPCF and RHR will automatically initiate on high drywell pressure. RCIC and HPCF injection into the RPV begins without RPV depressurization, but for RHR, only the pump starts for initiation. The operator must confirm these high pressure systems are operating and try manual starts if they are not.

The operator must monitor the reactor water level to determine if the RCIC and HPCF can maintain or increase the reactor water level on their own. If the water level is decreasing and the operator does nothing, ADS valves automatically open to depressurize the RPV at level 1 (one) so the RHR can begin flooding. The operator should control RPV pressure and level in accordance with the symptom-based Emergency Operating Procedures to avoid automatic ADS initiation.

If reactor water level can not be maintained with RCIC and HPCF, the operator should use the SRVs to depressurize the RPV to a pressure where RHR can inject water into the RPV. As the RPV depressurizes, the HPCF will increase its flow rate which will slow or stabilize the dropping reactor water level. If the reactor water level continues to drop, the operator can increase the depressurization rate by opening more SRVs to permit low pressure RHR flooding injection.

Once a RHR loop is not required for reactor water level control, it can be applied to the same tasks identified for the large break description above. If the reactor water level should begin to rise, the operator should anticipate the reflooding possibility and respond as described in the large break description above.

If the reactor water level begins to increase after the initial high pressure ECCS response occurs, then the operator should stop flooding the RPV before the level 8 is reached to prevent filling the steamlines. Even to a lessor degree than for a large break, the drywell or wetwell sprays are not required during the first 30 minutes for medium/small breaks. If the RHR system is not required to maintain reactor water level, it can be used to control suppression pool water level,

suppression pool temperature, and containment pressure in accordance with the symptom-based EOPs.

Breaks Outside Containment—These breaks are detected by the Leak Detection and Isolation System and initiate various isolation responses and potentially a scram, depending on the established logic combinations for the many monitored signals. The drywell pressure will not increase to initiate the ECCS. For the cases where the leak detection and isolation system isolated the MSIVs, the decay heat will be vented to the suppression pool through the SRVs. Thus the event is reduced to a transient "isolation" event. If the level control system can not automatically makeup the reactor water level, the reactor water level will decrease due to steam venting to the suppression pool. The operator can manually initiate RCIC and HPCF, as required, to maintain reactor water level in accordance with the symptom-based Emergency Operating Procedures. As the RHR system is not required for RPV makeup for an isolatable break outside the containment and if either RCIC or HPCF is operable, RHR can be applied for suppression pool cooling.

Question 420.82

In section 7.1.2.3.3(1)(c) is manual control required only after 30 minutes? Why isn't automatic control also provided? (7.1.2.3.3)

Response 420.82

Drywell or wetwell spray is not required before 30 minutes for the postulated break sequences. Drywell and wetwell sprays are directed by the symptom-based Emergency Operating Procedures.

Automatic initiation of the containment sprays was judged to not be an effective approach.

Fast operator response time is not required. For comparison, the GESSAR BWR-6 containment design pressure of 0.11 MPaG resulted in a lower margin for steam bypass capability and required automatic containment spray. The ABWR has a higher 0.31 MPaG containment design pressure and, relatively, a lower steam bypass leakage area requirement which will allow more time for operator action. Manual initiation of drywell/wetwell sprays 30 minutes after the initiation of the event will be sufficient to control and limit the pressure rise below the design value.

The ABWR design allows for easy procedural valve alignment by the operator to achieve the containment spray modes. The heat exchanger is always in the flow path, and only the drywell and/or wetwell spray valves must be opened to initiate spray.

The design is simpler without automatic initiation.

Question 420.83

Is the suppression pool cooling also provided with automatic control? (7.1.2.3.4)

Response 420.83

The suppression pool cooling is provided with both automatic and manual control. Section 7.1.2.3.4 has been revised.

Non-automated suppression pool cooling is consistent with the GESSAR II design which was granted an FDA by the NRC (See GESSAR II FSAR, Subsection 7.3.1.1.5).

Question 420.84

What EMI coupling protection is to be provided for the I&C systems and how will its effectiveness for specific installed conditions be verified? (Examples of standards such as FCC docket 20780, Part 15, Subpart J, "Class A Computing Devices" have been identified by industry for computing devices as a source limitation for radiated and conducted noise. Also ANSI C63.12-1984 "Recommended Practice on procedures for Control of System Electromagnetic Capability," is available as a design guidance tool.) Address these effects, possible limitations, and the criteria and standards to be used by GE in the ABWR design for safety systems equipment. (App 3I)

Response 420.84

System tolerance to EMI, and associated testing, is discussed in the following sections of Appendix 7A: 7A.2, Response (4); 7A.2, Response (15); 7A.3, Response (6); and 7A.3, Response (8).

Units shall undergo standard surge withstand capability tests as defined in IEEE-472. The fiber-optic equipment will undergo EMI and surge testing to the standards identified in NUREG/CR-3453/EGG-2444.

Additional detail is provided in the design documents referenced in Subsection 1.1.3.

Question 420.85

How are the Class 1E circuits protected/isolated from the 1E and N-1E CRT high voltage circuits in the main control panels? (7)

Response 420.85

High voltages in the CRTs are normally isolated by the video driver circuits in the CRT controllers. If a catastrophic failure causes high voltage to appear in the low voltage signal processing circuitry, only local damage will occur, since signal transmission from Class 1E to both 1E and non-1E CRTs is always over fiber optic cables. Thus, propagation of electrical faults such as transients or short circuits cannot occur.

Question 420.86

If hardwired meters are used explain how the adjacent electronics in the control panels are protected from EMI and fault propagation from faulted current transformers. (7)

Response 420.86

Hardwired analog-type meters and current transformers are not used near sensitive electronics, either on the operator benchboard or back row panels. If hardwired meters are used for backup of a few critical functions, then they will be installed on a separate backup panel. Current transformers and hardwired meters will form instrument loops physically and electrically independent from the multiplexed, microprocessor-based data acquisition and control systems. As discussed in other responses, general EMI protection is provided by fiber-optic data transmission and proper grounding.

Question 420.87

The response noted that RIP trips have mostly been caused by noise in the adjustable speed drive (ASD). Describe the changes that have been made to reduce the susceptibility of the RIP's or the reduction in noise of the ASD's.

Response 420.87

The primary cause of faulty trips of Adjustable Speed Drives (ASD) in the European plants with Reactor Internal Pumps (RIPs) is due to electromagnetic interference (EMI) and harmonic effects on the improperly installed ASD power and control cables. Several preventive changes have been made to the ASD design and installation requirements to reduce their occurrence. These changes can be summarized as below:

(1) Interconnection cables within the ASD are designed with consideration for EMI effects. Factory tests will be performed on the ASD equipment to demonstrate that EMI effects are within the tolerance limits of the ASD control functions. Proper isolation between the power and the control cables is specified to eliminate propagation of EMI noises. Both the ASD equipment requirements specifications and the installation specification reflect the requirements of the "Special Wire and Cable Specification" (Subsection 1.1.3) for interconnection of static converter device.

(2) The ASD is designed to ensure that current and voltage distortions due to harmonics on the output power waveform is tolerable by both the connected loads and the input power distribution system. Phase-shifted isolation transformers are utilized to reduce harmonic contents on the power supply circuits. These specifications have been defined as interface requirements on the affected equipment designs.

Question 420.88

List the criteria or standards for surge withstand capability to be applied to the equipment. ANSI/IEEE-C62.45-1987 "Guide on Surge Testing Equipment Connected to Low-Voltage AC Power Circuits" is an example of criteria currently being applied to limit the possible affects from, line surges. (7)

Response 420.88

The answer to this question is included in the response to Question 420.7.

Question 420.89

List the design goals for the survivability and continued operation of safety systems equipment in the presence of line switching transients, lightning induced surges and other induced transients within the systems as installed. (7)

Response 420.89

Surge withstand capability, and associated testing criteria, is discussed in Sections 7A.2 [Response (4)] and 7A.3 [Response (8)] of Appendix 7A.

Question 420.90

Address the possible effects of electrostatic discharge (ESD) at keyboards, keyed switches and other exposed equipment components. (7)

Response 420.90

If appropriate countermeasures are not taken, then electrostatic discharge (ESD) can cause damage to electronic components. High impedance devices using MOS (metal-oxide semiconductor) technology are particularly subject to damage. The discharge from an electrically charged human body, when certain areas of electronic equipment are touched (keypads, switches), may open the junctions of CMOS devices or other semiconductors.

However, modern CMOS and other MOS components have internal protection against ESD in the form of diode clamping arrays and current limiting resistors that conduct the discharge away from the junction. In addition, good circuit design practices will include the use of other devices such as transient suppressors [for example, metal-oxide varistors (MOVs), Zener diodes] across critical circuit inputs and outputs that are directly exposed to external transients.

Other precautions against the effects of ESD take the form of adequate insulation or proper grounding. Keypads generally have insulating material in the form of a thick plastic covering over the metallic switch contacts. Toggle switches and other controls should have insulating knobs. Various metallic chassis components (front panel, handles, deck, connector shells) should be solidly grounded to each other (the effects of painted and plated surfaces should be considered), and the chassis should be grounded to the appropriate panel or instrument ground bus by metallic ground straps. Panel and instrument mounting hardware should not be depended upon for solid grounds. Printed circuit boards must have the signal commons and ground plane commons properly connected to the common busses and to the low voltage logic power supplies.

Microprocessor-based control equipment for ABWR is designed under the assumption that users will have taken no precautions against static charge buildup before attempting to operate the equipment. The equipment is designed to tolerate an electrostatic discharge without damage, partly by employing insulation (with no air gaps) over exposed metallic components, but primarily by providing an alternative path for current flow other than through sensitive circuit paths. As discussed previously, this means that all exposed metallic components of the

system must be grounded. Low inductance multipoint grounds are used where ESD current flow is desired and single-point grounds where discharge flow is not wanted.

The low power requirements of ABWR control equipment ensure that the integrity of the equipment enclosures is not compromised by large ventilating holes or slots. Special attention is given to hinges, joints, and seams so that the continuity of shielding is maintained.

In the system configuration, where shielded cables transfer data between the equipment enclosures, the cables must be prevented from propagating ESD currents and voltages between system units. For ABWR safety systems, the problem has been minimized by using fiber optic cables as the transmission medium for most critical signals. While the cables may contain metallic supporting members or protective shields, these will not be electrically connected to any equipment or circuit. For certain functions where hardwired cable is required, solid grounding of cable shields to the equipment chassis and bypass capacitors at all inputs and outputs shall be used to divert ESD currents to ground.

These hardware solutions shall be supplemented with firmware ESD solutions to protect against potential upsets such as system lockup if ESD noise causes memory or data flow errors. The methods used are discussed as part of the fault-tolerance issues.

The susceptibility of ABWR control equipment to electrostatic discharges shall be established using the test procedures included in IEC Publication 801-2, Electromagnetic Compatibility for Industrial-Process Measurement and Control Equipment. Part 2: Electrostatic Discharge Requirements. The test procedures of paragraph 8 of this document shall be performed up to and including Severity Level 4, as defined in the document. The following acceptance criteria shall be used:

(1) No change in trip output status shall be observed during the test.

(2) Equipment shall perform its intended functions after the test.

Note that the safety system control equipment for ABWR has inherent protection against transient ESD effects in that data is continually refreshed throughout the system, including trip, display and indicator status. Further protection is provided by the asynchronous, four-division, 2-out-of-4 channel configuration. Temporarily corrupted data in one division cannot cause an inadvertent trip or permanently disable a required trip. When bad data or equipment damage is detected, the affected division can be bypassed until repaired. In the reactor protection system (RPS) and main steam isolation valve (MSIV) channels, where the final trip outputs are also in a 2-out-of-4 configuration, both the sensor input and trip output sides of each equipment division can be bypassed, thus preventing failure from any cause in one channel from inhibiting or inadvertently causing a trip.

Question 420.91

Most of the I&C system microprocessor equipment is likely to be located in a mild environment, but survivability requirements or limitations on the voltage potential buildup by humidity control or other measures is not discussed. Also, the data concentrators are provided at remote locations where the environmental control is not clearly described. Identify the criteria, design limits and testing program for this area of ESD controls. (7)

Response 420.91

The environmental qualification requirements for systems and equipment are described in Section 3.11 and in the design documents referenced in Subsection 1.1.3 (in particular, BWR Requirements - Equipment Environmental Interface Data and the Safety System Logic & Control Design Specification).

Voltage potential buildup will be limited by proper grounding of equipment and use of appropriate static control materials and dielectric barriers to ensure that high potentials cannot be coupled to sensitive semiconductor devices (see the response to Question 420.90). Humidity controls are provided by the normal and emergency HVAC systems; when relative humidity is restricted to the ranges specified for the mild environment locations where the microprocessor equipment will be installed, there will be no unusual static charge buildup.

The thermal design environments for the SSLC panels themselves are discussed in the response to Question 420.008. The Remote Multiplexing Units (i.e., “data concentrators”) of the Essential Multiplexing System are located within the “clean” areas of the Reactor Building outside the secondary containment. The panels containing this equipment will be environmentally qualified and tested in accordance with Regulatory Guide 1.89 and IEEE-323 for the areas in which they are located.

I&C microprocessor equipment will be required to meet the requirements of IEC Standard Publication 801-2, “Electromagnetic Compatibility for Industrial Process Measurement and Control Equipment, Part 2 (Electrostatic Discharge Requirements)”. Test equipment shall have the following minimum capabilities:

- Output Voltage—2 kV to 16.5 kV
- Polarity—positive
- Energy Storage Capacitor—150 pF plus or minus 10%
- Discharge Resistor—150 ohms plus or minus 5%
- Charging Resistor—100 Megohms plus or minus 10%
- Rise time of discharge current—5 ns plus or minus 30% at 4 KV

- Operating Modes—(1) up to 20 discharges per second for approximately 5 seconds per test; (2) also single pulses with at least 1 sec between succesive discharges.

Acceptance criterion shall be no misoperation during or after test.

Question 420.92

The application of high technology semiconductor materials and related technologies to computing devices has resulted in high current densities in some portions of equipment used in non-nuclear applications. This type of equipment may be used for the ABWR.

Identify how these higher current densities, which can result in localized high heat spots, will be considered in the design described by Section 7.0. (7)

Response 420.92

Computing devices used for ABWR instrumentation are designed to utilize the lowest power components available for the task. Technologies such as CMOS and low power Schottky, including high speed and advanced versions, will be the standard device types used for all functions, including the microprocessor. The emphasis is on low stress design; when these components are operated within their voltage and current ratings and at their specified clock frequency, no unusual heat stresses will occur within the semiconductor materials. As much as possible, all components shall be of the high reliability type or adequately screened and burned-in to ensure high reliability.

The only likely areas of high current density will be in the power semiconductors of solid-state load drivers. The effects of these localized high spots will be mitigated by proper heat sinking and ventilation of the local area, following the component vendor's recommendations. High power devices will be physically separated as much as possible from lower power circuitry.

*[To ensure that adequate compensation for heat rise is incorporated into the design, a COL licensing information thermal analysis will be performed at the circuit board, instrument and panel design stages. The heat release by internal panel components shall not raise the internal temperature of a panel to greater than 15°C above external ambient temperature of the equipment room for electronic components within a chassis or within any printed circuit file structure. Convective cooling is assumed; cooling fans, particularly for safety-related equipment, are not recommended for mounting within instruments or panels. However, if fans are used to increase reliability of equipment located in high density panels or high temperature areas, no credit shall be taken for forced-air cooling in the thermal analyses. Since it is intended that all computerized instrumentation will be installed in the Main Control Room or in other areas with similar environmental conditions, adequate HVAC will generally be available for proper heat transfer. In case of loss of HVAC, the instrumentation is designed for operation to an ambient temperature of 50°C. Environmental qualification testing of safety-related equipment shall include adequate margin to ensure that this condition can be met under extreme conditions. The minimum margin shall be as stated in IEEE-323, Subsection 6.3.1.5. Additional margin will be determined by thermal analysis of the installed equipment areas.]**

All I&C designs shall meet the environmental criteria stated in the following ABWR requirements documents listed in Section 1.1.3:

(1) BWR Requirements—Equipment Environmental Interface Data,

(2) Environmental Quality Requirements for Safety Grade Equipment.

[*At the component design level, the methods of MIL-HDBK-217E (or latest revision) shall be used to include environmental stress as part of overall reliability prediction.*]* During the detailed design stage, the Part Stress Analysis Prediction method shall be applied to all parts, using an appropriate environmental factor such as Ground, Fixed (rack mounted, air-cooled, but uncontrolled environment) or Ground, Benign (control room-type conditions). [*Thermal analysis is an important part of this method; all analyses shall follow the methods described in MIL-HDBK-251, "Reliability/Design: Thermal Applications".*]*

Question 420.93

The application of high technology semiconductor materials and related technologies to computing devices has resulted in high current densities in some portions of equipment used in non-nuclear applications. This type of equipment may be used for the ABWR.

Does an analysis of these potential hot spots result in special thermal design constraints? (7)

Response 420.93

The answer to this question is included in the reponse to Question 420.92.

Question 420.94

The application of high technology semiconductor materials and related technologies to computing devices has resulted in high current densities in some portions of equipment used in non-nuclear applications. This type of equipment may be used for the ABWR.

What design criteria are to be applied and what will be the effects upon the microprocessor reliability? (7)

Response 420.94

The answer to this question is included in the response to Question 420.92.

Question 420.95

The application of high technology semiconductor materials and related technologies to computing devices has resulted in high current densities in some portions of equipment used in non-nuclear applications. This type of equipment may be used for the ABWR.

Since the plant environmental limitations only identify general area temperature ranges, what consideration will be given to localized cooling and heat transfer? (7)

---

* See Section 7A.1(2).

* See Section 7A.1(1).

Response 420.95
The answer to this question is included in the response to Question 420.92.

Question 420.96
The safety system auxiliaries (Figure 15A.6-1) should be modified to include any HVAC required to assure continued operation of the electronics.

Response 420.96
The electronics for safety systems are located in either equipment rooms or the control room. The cooling of safety systems equipment rooms is already shown in Revision B of Figure 15A.6-1. The boxes titled "REACTOR BUILDING COOLING WATER SYSTEM" appear in 5 places on the figure. They are accompanied with notes on the right designating the areas which they cool. The HVAC system for the control room is also shown in Figure 15A.6-2 (top center).

Question 420.97
This refers to Section 3.11 for EQ. Section 3.11 invokes IEEE-323 as a basis for qualification. IEEE-323 was written assuming 40 year life. Address how this standard is to be extrapolated to a 60 year design life for the ABWR. (7.3.1.1.4(h))

Response 420.97
IEEE-323 is a consensus national standard, endorsed by the NRC, which provides an acceptable approach to demonstrating that a component is capable of performing its intended safety function, in a given environment, for a given time. Since historically, most applicants have sought a 40-year operating license for their facility, associated qualification activities have been based on a need to demonstrate a 40-year operating life. However, IEEE-323 is not premised on a specific life; in fact, devices undergoing qualification using the approach presented in this standard often will show qualified life times less than 40 years while others will show a qualified life of significantly greater than 40 years.

With respect to the ABWR, the designed life is intended to be 60 years. It is intended that IEEE-323 will be used to demonstrate that IE devices in the plant will have a qualified life, with appropriate margin, equal to or greater than that period of time. Devices or components for which such a demonstration can not be made will either be made will either be redesigned to show this condition, or will (in the case of consumables) be administratively controlled for periodic changeout.

Question 420.98
The more extensive use of semiconductors and fiberoptic materials in the RPS identifies an area of design not previously discussed in the standard review plan. The radiation qualification for semiconductor and fiber-optic is an evolving part of the technology related to microprocessors and fiber-optic communication networks.

Since the semiconductor and fiber-optic materials are to be distributed throughout the plant, the staff requires that the criteria and design application details be identified in order that equipment reliability and operating life projections may be identified. Space, defense and airline applications have developed criteria and standards which may apply to the ABWR. The October 1987 presentation identified the airline industry as a source of established technology for intelligent multiplexing systems.

Identify the specific airline criteria and standards which will form a part of the design guidance and list any other sources that GE is using as guidance.

Response 420.98

Remote multiplexing units (RMUs) of the essential multiplexing system (EMS) are located in the clean area (emergency electric equipment rooms) of the reactor building where the proper environmental condition is maintained by safety related HVAC. Furthermore, cable routings from these RMUs to the control room avoid high radiation areas. Equipment specifications are established providing criteria and design application requirements which bound the design basis environmental conditions of these areas.

For the application of a given technology and associated components in the instrumentation and control systems for ABWR, vendor product specifications will be compared to requirements derived from the details of the equipment design and the known design basis ambient environmental conditions to confirm suitability. This is an activity which will be performed at the time of equipment procurement and in accordance with the Quality Assurance program.

At present, specific airline criteria and standards are not invoked for design purposes. However, the MIL-HDBK-217E has occasionally been used as a source to provide preliminary assessment or scoping information regarding reliability of components for proposed digital technology applications.

Question 420.99

While a computer-based system can provide more effective man/machine interface, the internal system operation is more complex, and can be more obscure to the operator or maintenance person if he is required to intervene at a complex level.

Have the operator tasks with regard to interfacing with the safety system been analyzed? What was the result of the analysis? How did the result of the analysis affect the requirements, design and implementation of the safety system? (7)

Response 420.99

Tasks analyses have been performed in support of the design of the man-machine interface. The purpose of the task analyses is to tabulate the controls, indications and alarms needed to monitor and operate the safety systems and to allocate the various tasks comprised among hardware, software and operators. The information is then used to help define man-machine interface requirements for the hardware and software to be incorporated in the detailed design of the main

control room and local area panels. The basis for task analysis includes normal system operating procedures and sympton-based emergency operating procedures. The results of the task analyses of the safety systems is contained in auditable design record files.

Based upon the results of the task analyses, the man-machine interface requirements for a specific system are specified in the system's design specification. The man-machine interface requirements specification for a specific system and interface requirements specified in the task analysis report for a specified system constitute the top level man-machine interface requirements for that particular system. These requirements are then integrated into the operator interface panel design. The man-machine interface requirement specifications for the safety systems are contained in auditable design record files.

Question 420.100

While a computer-based system can provide more effective man/machine interface, the internal system operation is more complex, and can be more obscure to the operator or maintenance person if he is required to intervene at a complex level.

Describe the hardware design features that provide administrative control of devices capable of changing the data or program in the computer-based safety system. (7)

Response 420.100

Data Security Features:

(1) Front panel keylock control to enable keypad input [places instrument in off-line (tripped) mode].

(2) Multi-level password control (factory and user settings).

(3) Control programs, algorithms, and data tables in PROM for protected storage.

Question 420.101

While a computer-based system can provide more effective man/machine interface, the internal system operation is more complex, and can be more obscure to the operator or maintenance person if he is required to intervene at a complex level.

What data or program elements are adjustable/selectable by the operator? (7)

Response 420.101

(1) Setpoints accessible from front panel for reading (can be changed through keylock/password control).

(2) Calibration inputs from front panel (accessible through keylock/password control).

(3) Manual self-diagnostics (off-line access through keylock control).

(4) Cross-channel check of sensor data (read only).

(5) Manual trip of inoperable instrument channel (single datavariable within a logic processing instrument).

The operator cannot access the program to change program flow or operation of any logic function shown on an IBD.

Question 420.102

While a computer-based system can provide more effective man/machine interface, the internal system operation is more complex, and can be more obscure to the operator or maintenance person if he is required to intervene at a complex level.

What capability of providing a permanent and current record of the system data base is provided in the system? (7)

Response 420.102

Each safety system controller is a real-time, computer-based device equipped with both permanent data storage capability and volatile program memory.

Permanent data storage within SSLC:

(1) The control programs, algorithms, and data tables of each system controller are in PROM.

(2) Setpoints are EEPROM (EAROM).

The contents of PROM and EEPROM can be downloaded to the process computer for archiving or analysis upon operator request. A system fault or internal controller fault, including power failure, that causes an inoperative condition will result in PROM, EEPROM, and RAM data being automatically downloaded to the process computer.

Question 420.103

While a computer-based system can provide more effective man/machine interface, the internal system operation is more complex, and can be more obscure to the operator or maintenance person if he is required to intervene at a complex level.

Provide the basis for assumed operator response times. (7)

Response 420.103

The safety systems are initiated automatically when required. There are no assumed operator response times used in the task analyses of the safety systems since they are initiated automatically. Manual actuation capability of safety systems is provided in accordance with Paragraph 4.17 of IEEE-279.

Question 420.104

While a computer-based system can provide more effective man/machine interface, the internal system operation is more complex, and can be more obscure to the operator or maintenance person if he is required to intervene at a complex level.

Discuss the range of possible scenarios for transferring the system from automatic to manual mode (and vice versa) and the potential for error or disturbance during such a transfer.

Describe any differences characterized by these transfers with respect to BWR designs previously reviewed by the staff. For example, discuss consideration of I&E Bulletin 80-06, “Engineered Safety Features Reset Controls”. (7)

Response 420.104

In the standby safety systems, automatic and manual modes coexist; no transfer is required. Manual control of reactor emergency shutdown or initiation of the emergency core cooling systems is always available to the operator. Manual control is implemented both at the system and individual equipment level. Manual functions do not require the 2-out-of-4 voting of the automatic signals. However, various interlocks from valve limit switches, pump status indicators, or other sensors limit the operator's responses to safe actions.

Question 420.105

The current criteria for ATWS capabilities is the NRC ATWS Rule 10CFR50.62. The existing BWR plant designs have been provided with a Safety Evaluation of the Topical Report (NEDE-31096-P) which contains an Appendix A “Checklist for Plant Specific Review of Alternate Rod Injection System (ARI). No topical reference was found in the submittal.

Indicate if this checklist is applicable to this design and how the compliance to the ATWS rule is to be achieved. (7.1)

Response 420.105

The Appendix A “Checklist for Plant Specific Review of Alternate Rod Injection (ARI)” contained in topical report NEDE-31096-P-A (Response to NRC ATWS Rule, 10CFR50.62) is applicable to the current ARI function. It was used as a guide in the development of the design.

As Discussed in the response to Question 420.15, the ARI design has been modified since the previous submittal to incorporate the ARI valves in compliance with the topical report.

Question 420.106

Define the logic by type and verify the diversity of the reactor internal pump trip circuits. If software is to be a part of this design, identify the form and diversity to be applied to this function. (7)

Response 420.106

Referring to Figure 20.3-24 on recirculation pump trip (RPT) logic, redundant inputs and diverse logic are provided in the RPT design. For example, the use of four sensors to monitor

turbine stop valve (TSV) positions and two-out-of-four trip logic in the reactor protection system insulates the RPT signal from the effect of either two sensor failures in the non-trip condition, or one sensor failure in the trip condition. Furthermore, a two-out-of-four trip logic is provided in the RFC system to protect the divisional failure in the reactor protection system (RPS). This same degree of tolerance is available to the TCV fast closure and wide range water level sensors. For the high dome pressure and L3 RPT trip, the failure of one of three sensors in either the trip or non-trip condition is tolerable by the two-out-of-three logic.

Since all trip logic will be performed by application software embedded in dedicated microprocessors, logic redundancy depends only on the voting algorithm for the processor outputs. With both the RPS and SSLC (Safety System Logic & Control) outputs being voted upon by two-out-of-four logic in the recirculation flow control (RFC) system, failure in two divisions of RPS or SSLC processing channels, multiplexer, or data bus in the non-trip condition (a very remote possibility), or one channel of the same in the trip condition can be tolerated. Similarly, with the voting of the RFC system, feedwater flow control (FWC) system and steam bypass & pressure control (SB&PC) system controllers' outputs being performed by two-out-of-three logic, failure in one processing node in each controller will not result in a loss of system function.

Trip diversification is accomplished by planned distribution of trip logic. Multiple failures in the TCV pressure sensors, TSV position switches, or RPS, SB&PC or FWC processors will not cause the loss of more than five RIPs, and multiple failures in the SSLC processors will not cause more than six staggered pump trips. By separating the L2, L3 and high pressure RPT trip logic from the RPS system, no common mode failure can cause a loss of both reactor scram and ATWS RPT functions upon command. Also, by delaying the pump trip in three RIPs with hardware built into the ASD, no multiple failures in the RPT trip logic could cause a simultaneous trip of more than 5 RIPs.

Question 420.107

Describe procedural controls considered adequate to control the keylocked SLCS. (9.3.5.2)

Response 420.107

The operation of the standby liquid control system (SLCS) is governed by the symptom-based emergency operating procedures (EOPs). NEDO-31331, “BWR Owners Group: Emergency Procedure Guidelines”, Rev. 4, March 1987, has been approved by the NRC. These guidelines (which were originally developed for general application for BWRs) have been incorporated for the SLCS system in the ABWR emergency procedure guidelines (See Subsection 1.1.3).

There are four entry conditions, any one of which would cause the operator to initiate emergency procedures. These are:

(1) RPV water level below Level 3

(2) RPV pressure above the high pressure setpoint

(3) Drywell pressure above the high pressure setpoint

(4) Reactor power greater than specified limits or unknown

It is the fourth entry condition which could cause a need for SLCS. Once the operator has entered the EOPs he is instructed to monitor and control the following:

(1) RPV water level

(2) RPV pressure

(3) RPV power

The EOP specifies numerous ways to lower power while continuing attempts to get the control rods in. The operator also monitors the suppression pool temperature during this procedure. Before the pool reaches a specified limit SLCS is initiated.

These symptom-based EOPs provide procedural controls that are adequate to control the keylocked SLCS.

Question 420.108
In section (m) consider replacing “obviate” with prevent or preclude. (7.1.2.2)

Response 420.108
“Obviate” has been replaced with “prevent” in Subsection 7.1.2.2 (m).

Question 420.109
In Section 7.1.2.3.1(c), describe how provision for manual control limits dependence on operator judgement in times of stress. (7.1.2.3.1)

Response 420.109
Strictly speaking, provision for manual control need not be mentioned under the heading “limit dependence on operator judgement in times of stress...”. However, the intent was that the operator would be less stressed knowing such provision was available, even though the ECCS initiation is fully automated.

Question 420.110
For Section 7.1.2.3.1(2), describe any precautions taken to prevent or minimize inadvertent initiation of non-safety systems during accidents. (7.1.2.3.1)

Response 420.110
The non-safety systems primarily consist of control systems that continuously operate during normal reactor power operation. These are described in Section 7.7. It is desirable, but not essential, that these systems continue to operate during postulated accident events in order to

preclude the need for (or reduce the load on) the protection systems. Therefore, the question is not applicable to these systems.

As indicated in Subsection 9.5.1.1, the fire protection systems are designed so that their inadvertent operation or the occurrence of a single failure in any of these systems will not prevent plant safe shutdown.

Question 420.111

Why isn't the requirement to meet the Seismic Category I design requirements (7.1.2.3.7(1)(c)) listed in the other applicable sections? (7.1.2.3.7)

Response 420.111

The Seismic Category I requirement is generally applied to all safety related instrumentation and control equipment as stated generically in Subsection 7.1.2.11.4 and in Section 3.10. It is usually not considered a design basis for each safety system since it is already imposed as a qualification requirement for the safety system's components. The statement in Subsection 7.1.2.3.7(1)(c) is therefore unnecessary, though it is true. To be consistent with the other sections, and avoid the erroneous implication that other safety systems may not meet such requirements. Subsection 7.1.2.3.7(c) has been deleted.

Question 420.112

Are the other sections to be revised to include the normal operation parameters similar to 7.1.2.4.3(1)(a)? (7.1.2.4.3)

Response 420.112

We do not anticipate such revisions for the following reason:

The safety design bases for the protection systems described in this section generally pertain to accident (abnormal) conditions. Few, if any, "normal" operation parameters are defined for such systems, other than to monitor for detection of an abnormal condition. An exception, as indicated, is the RHR shutdown cooling mode which has a safety function to remove residual heat from the reactor vessel during normal shutdown.

Normal operating parameters are generally handled by the control systems described in Section 7.7. These systems design bases are just the opposite, in that they generally have no safety design bases except to assure their functions do not preclude the operation of safety-related systems. [See Subsection 7.1.2.7(1).]

Question 420.113

Has consideration been given to providing the annunciators with backup diesel or battery power? (Ref. 7.1.2.6.1.1(2)(g)) (7.1.2.6.1.1)

Response 420.113

Yes. All control room annunciators shall be powered uninterruptably.

Question 420.114
The copy of Section 7 provided to the staff did not include Appendix 7A nor an indication that it was to be provided later. Provide this section or a schedule for providing it. (7A)

Response 420.114
Appendix 7A was submitted to the NRC Staff in March, 1989.

Question 420.115
In the discussion about torque switches and thermal overloads, there is a reference to Section 3.8.4.2 which is the applicable codes and standards for seismic qualification of the reactor and control buildings. What is the correct reference? (7.3.1.1.1.3(4)(e))

Response 420.115
Subsection 7.3.1.1.1.3(4) (e) has been revised to say "(for more information on valve testing, see Subsection 3.9.3.2)"

Question 420.116
The forth paragraph seems to imply that all three systems are needed to mitigate a LOCA. Is that accurate? (1.2.2.4.8.1.2)

Response 420.116
The previous text was misleading. Subsection 6.3.1.1 provides a more accurate and detailed discription of the redundant features of the ECCS network. The last sentence of the fourth paragraph of Subsection 1.2.2.4.8.1.2 has been replaced with the following:

"These high pressure systems, combined with the RHR low pressure flooders and ADS, make up the ECCS network which can accommodate any single failure and still safely shut down the reactor. (See Subsection 6.3.1.1 for detail description of ECCS redundancy and reliability.)"

Question 420.117
(Describe interlocks and indications used to prevent injection of the testing mode demineralization water instead of boron. 9.3.5.1.1)

Response 420.117
Control room indications in conjunction with the EOPs prevent the unlikely occurence of injecting the test tank demineralization water instead of boron.

When the SLCS has been initiated from the main control room, the injection valve and the pump suction valve will open to begin injection of the sodium pentaborate solution. In the unlikely event that the test tank suction valve were open, then neither the injection valve nor the pump suction valve would open and demineralization water would be circulated back to the test tank.However, the test tank suction valve is a manually operated valve whose position (full open or full close) is indicated in the control room. To inhibit boron injection under this condition, the plant operators would have had to have left the test tank valve open after testing,

and the control room operators would have had to ignore the valve position indicator.This is an extreme unlikely scenario.

In addition to the above, the operators operating under the EPGs (See response to Question 420.107) are instructed to confirm boron injection by monitoring the solution water level in the tank.

Therefore, the operating procedures and indicators will prevent the injection of the testing mode demineralization water instead of boron.

Question 420.118

Describe when appropriate operator action in seconds is required to prevent significant radiological impact. (15.2.4.5.1)

Response 420.118

The reference to "...operator action (seconds)..." in Subsection 15.2.4.5.1(1) was is in error and this subsection has been revised accordingly.

With respect to offsite radiological impact, there are no operator actions required within "seconds" to prevent significant radiological impact. Operator actions for transients are normally based upon (1) returning the plant to a normal condition or (2) are taken to prevent damage to the plant. Those actions necessary to prevent significant radiological impact are automated as part of the normal plant safely systems.

Question 420.119

Are there any other valves which must isolate upon initiation of the SLCS? (7.4.1.2(7))

Response 420.119

Only the reactor water cleanup isolation valve must close upon initiation of the SLCS the operator will be monitoring and controlling many functions of the plant, (See response to Question 420.107), such as managing the RPV water level, to bring the plant to a safe shutdown. These other actions may involve isolating other systems to maximize the benefits of the SLCS.

Question 420.120

List all exemptions to the requirement rather than providing an example. (7.3.2.1.2(3)(c))

Response 420.120

The list of specific devices which cannot be fully operated for test during plant operation, or tested by other than continuity tests without degrading plant operability or safety, includes (but is not necessarily limited to) the following:

(1) SRV solenoid pilot valves

(2) HP/LP interlocked valves for RHR

(3) Scram air header dump valves

(4) SLC injection valves

(5) Boron tank suction valves

Question 420.121

The first paragraph states that pipe break outside containment and feedwater line break are discussed below. The staff could not locate these items. (7.3.1.2(7))

Response 420.121

The following has been added to 7.3.1.2(7):

(f)Pipe Break Outside Containment and Feedwater Line Break

For any postulated pipe rupture, the structural integrity of the containment structure is maintained.In addition, safety/relief valves (SRVs) and the reactor core isolation cooling (RCIC) system steamline are located and restrained so that a pipe failure would not prevent depressurization. Separation is provided to preserve the independence of the low-pressure flooder (LPFL) systems.

For high energy piping systems penetrating through the containment, such as feedwater lines, isolation valves are located as close to the containment as possible.The pressure, water level, and flow sensor instrumentation for essential systems, which are required to function following a pipe rupture, are protected.

Pipe whip protection is detailed in Section 3.6"

Question 420.122

Is the instrumentation required for the operator to verify bypass valve performance and relief valve operation 1E or N-1E? (15.2.2.2.1.4)

Response 420.122

Bypass valve position sensing equipment is all non-1E.

The safety relief valves are designed with two methods of detecting their position. Linear variable differential transformers (LVDTs) are the primary sensors. These are mounted on the valves, and qualified along with the valves themselves as safety-related devices.Signals from the LVDTs are transmitted through the MUX interface to the annunciator and computer.Both of these devices are non-1E. However, SRV position is identified by Regulatory Guide 1.97 as a post-accident monitoring parameter, and is designated as Type D, Category 2, inTable 7.5-2. Thus, display instrumentation is provided in accordance with Regulatory Guide 1.97 for SRV position.

The other method of detecting SRV position (or leaking) is accomplished with temperature sensors in the tailpipes for each of the valves. Signals are routed to a common temperature recorder which continuously cycles through the full set of SRVs and records each's temperature on a moving chart. This instrumentation is all non-1E. The SRVs and associated instrumentation are shown on the nuclear boiler system P&ID, Figure 5.1-3.

In addition to the two methods described above, the Class-1E suppression pool temperature monitoring (SPTM) system provides an indirect method of detecting relief valve activity. The SPTM is described in Sections 7.6.1.7 and 7.6.2.7.

Question 435.1

The scope of the electrical systems that GE intends to provide under the ABWR design is poorly defined. In sections 1.2.2.5.1.1 and 8.1.2.1 a brief description of the Unit Auxiliary Power System is provided that states that this system supplies power to unit loads that are non-safety related and uses the main generator as the normal power source with the reserve auxiliary transformers as a backup source. It is not clear however whether this system will be provided under the ABWR design. No detailed description or single line diagrams of this system, the main generator, unit auxiliary transformer, or reserve auxiliary transformers are provided. Nor is this system identified as being outside the ABWR design with appropriate interface requirements provided. The staff requires that a clear distinction be made between the electrical systems that will be provided under the scope of the ABWR standard design and those that will be provided by others. This is necessary so that the staff can judge the completeness and adequacy of the electrical systems within the ABWR design and the completeness and adequacy of the interface requirements to those systems outside the ABWR design scope. Please provide this information.

Response 435.1

Subsequent to this question, Chapter 8 has been rewritten. A clear listing of scope definition is now found in 8.2.1.1.

Subsection 8.1.2.1 has been revised to include a more detailed interface definition.

Question 435.2

The ABWR SSAR does not address how the ABWR will cope with a station blackout event. The station blackout rule, 10CFR50.63, which became effective July 21, 1988, requires that each light-water-cooled nuclear power plant licensed to operate must be able to withstand for a specified duration and recover from a station blackout (loss of all alternating current power). Please provide details on the design aspects of ABWR systems and equipment that will be used to cope with a station blackout. In particular address the capabilities of the dc power systems to cope with a station blackout, the loading and endurance of the batteries used to cope with a station blackout, and the capabilities of any alternate ac (AAC) power sources used to cope with a station blackout. Identify any interface requirement needed on the offsite power system or other systems in order to support the station blackout design criteria. Additional information and guidance on station blackout can be found in Regulatory Guide 1.155 and NUMARC-8700.

Response 435.2

An alternate AC (AAC) power source is available from an on-site combustion turbine generator (CTG). The CTG meets the requirements of an AAC source per Regulatory Guide 1.155, and therefore no scoping analysis is required. See Appendix 1C for a detailed discussion on station blackout.

Question 435.3

Section 8.1.2.1 of the ABWR SSAR states that the transfer of the Class 1E buses to the alternate preferred power source is a manual transfer. This seems to contradict sections 3.1.2.2.9.2.1 and 3.1.2.2.9.2.2 which indicate that the transfer is automatic. Please clarify, and if the transfer is automatic provide details on the type of transfer (slow, fast, make-before-break, etc.), the signals used to initiate transfer, and how the transfer is accomplished.

Response 435.3

Subsection 3.1.2.2.9.2 has been revised in Amendment 7 to reference Chapter 8. The transfer from the normal preferred to the alternate preferred power source is manual.

Question 435.4

(1) In section 8.2.3 of the ABWR SSAR one of the Nuclear Island interfaces identified is four 6.9 kV feeders to four transformers powering ten RIP pumps. However Figure 8.3-1 and Figure 8.3-2 show motor generator sets between two of the 6.9 kV feeders and the RIP pumps. Please clarify whether the motor generator sets will be used in the ABWR design and if so, describe their function.

(2) Also, with regard to the same subject, section 15.3.1.1.1 states that since four buses are used to supply power to the RIPS, the worst single failure can only cause three RIPs to trip, and the frequency of occurrence of this event is estimated to be less than 0.001 per year. Further down in this same section a statement is made that the probability of additional RIP trips is low (less than 10^{-6} per year). Justify these figures in light of the fact that historically, a total loss of offsite power occurs about once per 10 site-years (NUREG/CR-3992). Also, has the effect of a fault on the common feeder upstream of the 6.9 kV feeders been considered with respect to the coastdown capability of the RIPS and motor generator sets (braking effect)?

Response 435.4

(1) Motor generator sets are used in the ABWR design. Their primary function is to provide additional mechanical inertia to extend the coastdown time of the connected RIPs during a bus failure transient. With the adoption of motor-generator set design, the probability of having an all RIPs trip is virtually eliminated.

(2) A RIP reliability analysis is included in. This analysis estimates the probability that exactly 1, 2,.... 10 out of ten RIPs will trip. The results are shown in the following:

# of Pump Tripped	Probability
1	5.57E-3
2	1.07E-4
3	1.64E-3
4	6.44E-6
5	4.36E-5
6	6.37E-7
7	1.41E-7
8	<<1.00E-6
9	<<1.00E-6
10	<<1.00E-6

This analysis includes the effect of a fault on the common feeder upstream of the 6.9 kV feeders. However, the effect of a total loss of offsite power is not included. This is because the reactor system response to a total loss of offsite power is more than a trip of RIPs. For example, a load rejection followed by a reactor scram will be initiated after a loss of offsite power. The complete discussion of the loss of offsite power event is contained in Subsection 15.2.6.

Question 435.5

(1) Section 8.2.3 identifies the nominal voltage and number of feeders interfacing between the Nuclear Island and remainder of plant power systems; but they do not specify any interface requirements such as voltage and frequency tolerances, available fault current, loading, availability, etc., that are necessary to completely define the required interfaces. Please provide the information.

(2) You also need to provide additional information on the power sources (Unit Transformer, Startup Transformer, etc.) and the way they are configured to provide power to the RIP pumps in order to support the availabilities claimed for these power sources in section 15.3.1. We suggest a one-line diagram similar to that which you provided in your presentation to the staff on September 14, 1988, be included in the ABWR SSAR to better define this interface.

Response 435.5

(1) Subsection 8.2.3 has been revised to provide the updated interface definition.

(2) The electrical system single line (Figure 8.3-1) has been revised (per attached) to provide additional information on the power sources (Main Transformer, Auxiliary Transformers, etc.) and the way they are configured to provide power to the RIP pumps in order to support the abilities claimed for these power sources in Section 15.3.1.

Question 435.6

Section 8.3.1.1.4.1 and Figure 8.3-4 briefly describe the 120 VAC Safety-Related Instrument Power System. This is interruptible power backed up by the divisional diesel generators. Please identify the major loads and type of instrument loads fed by this system.

Response 435.6

Loads with sufficiently important functions to warrant providing power to them during the time that there is no offsite power available are on these buses. They are loads which may have their power interrupted without unacceptable consequences for the time that it takes to restore power from the diesels.

A complete load list is provided in Appendix 20B, which is current as of September, 1989. There will be some shuffling of individual loads as the detail design progresses. The specific loads which will eventually be on the instrument power system buses have not been identified yet. They are presently included in the loads on the uninterruptible buses. They will be separated from the other loads during the detail design phase of the plant.

Question 435.7

Section 8.3.1.1.4.2.2 and Figure 8.3-6 briefly describe the Class 1E RPS Power Supply. They show a rectifier and inverter fed from the 480 VAC Class 1E power system which is backed up by the 125 VDC power system. They do not however show an independent electrical protection assembly (EPA) on the output of the RPS power supply. Redundant EPAs were required (September 24, 1980 letter to all operating BWRs) on the output of past non-Class 1E RPS power supplies in order to satisfy the single failure criteria for non-fail-safe type failures (undervoltage, overvoltage, underfrequency). Because a Class 1E RPS power supply is used on the ABWR, redundant EPAs are not required since failure of the Class 1E supply is the first random failure taken. However, because that failure could be a non-fail-safe type failure that could result in loss of the scram function, at least one independent EPA should be monitoring the output of the RPS power supply.

(1) Please describe the type of EPA that will be used and discuss its independence from the RPS power supply.

(2) Also provide the voltage and frequency setpoints and tolerances that will be used on the EPA.

Response 435.7

EPAs are provided as described in 8.3.1.1.4.2.2(7) and shown in Figure 8.3-3.

Question 435.8

Section 8.3 does not identify any interfaces between the Nuclear Island and the remainder of plant systems within the onsite power systems. Please verify that all of the onsite power systems are within the Nuclear Island scope, or identify the interfaces and the interface requirements.

Response 435.8

All onsite power systems are within the scope of the ABWR design. The single line drawings, Figures 8.3-1a through 8.3-8.

Question 435.9

Section 8.3.1.1.4.2.3 and Figure 8.3-5 briefly describe the Process Computer Constant Voltage, Constant Frequency Power Supply; but they do not state whether it is qualified Class 1E, although it is discussed under Section 8.3.1.1.4.2 entitled "120V AC Safety Related Uninterruptible Power Supplies (UPS)." The backup to this power supply is from the non-Class 1E 250 VDC battery, and Section 8.3.2.1 states that all of the 250 VDC loads are non-Class 1E.

(1) Please clarify whether the Process Computer Power Supply is qualified Class 1E

(2) If it is Class 1E, explain why a backup non-Class 1E 250 VDC supply is connected to it, and describe the Class 1E/non-Class 1E isolation provided

(3) If it is non-Class 1E, explain why a normal and backup Class 1E 480 VAC supply is connected to it, and describe the Class 1E/non-Class 1E isolation provided

Response 435.9

(1) The Process Computer Power Supply is non-Class 1E

(2) See response (1)

(3) The design has been modified such that these circuits have no direct connections to any Class 1E power source, and no isolation is required (Response 435.40)

Question 435.10

(1) Section 8.3.1.1.4.2.4 states that the function of the Vital AC Power Supply System is to provide reliable 120V uninterruptible AC power for important non-safety related loads that are required for continuity of power plant operation. However it does not identify the non-safety related loads that it supplies, nor is a one-line diagram of the

power supply systems provided. Please identify the non-safety related loads that this system supplies and include a one-line diagram of the power supply system in the ABWR SSAR identifying the power sources to it. If there are any 1E/non-1E interfaces identify the isolation provided.

(2) This section also states that an independent 125V DC system, including a battery and battery charger, is the normal source of power for the Vital AC Power System. However section 8.1.2.1 states that there are no non-Class 1E 125 VDC batteries supplied as part of the plant design. Please clarify this apparent discrepancy. Also, include this system in a one-line diagram to be provided for the Vital AC Power System.

Response 435.10

(1) Chapter 8 has been rewritten since the original question. The non-Class 1E Vital AC Power System is now described in 8.3.1.0.3. The single-line is provided as Figure 8.3-3. Both the loads and the sources for these constant-voltage-constant-frequency (CVCF) power supplies are non-Class 1E, including the batteries, so there are no 1E/non-1E interfaces.

An updated Table 20B-1 has been provided, which identifies the devices connected to the non-Class 1E CVCFs as having power sources beginning with CVCF AN, BN, and CN

(2) Each non-Class 1E CVCF has its own independent non-Class 1E 125 VDC power source, including its battery, as described above. This is also described in the second-to-last paragraph of 8.1.2.2. Statements indicating no non-Class 1E batteries have been removed.

Question 435.11

Section 8.3.1.1.5.1 describes the physical separation and independence of electric equipment and wiring. It seems to indicate that there is separation between the divisions but a statement is made that seems to imply that the separation may not in all cases be total. This statement says that electric equipment and wiring for the Class 1E systems which are segregated into separate divisions are separated so that no design basis event is capable of disabling any ESF total function. This statement could be interpreted to mean that in an area with three divisions, each with 100% capability, a single design basis event would be allowed to fail two of the divisions since 100% capability for the ESF function would still survive. Please clarify this point and indicate whether a single design basis event will ever be allowed to fail more than one division.

Response 435.11

The design objective is that no design basis event will disable the ability to safely shutdown the reactor with less than either of two divisions. Subsection 8.3.1.1.5.1 has been revised accordingly.

Question 435.12

Design criteria (4) in section 8.3.1.1.5.2 states that interrupting capacity of switchgear, load centers, motor control centers, and distribution panels is compatible with the short circuit current available at the Class 1E buses. Verify that this criteria ensures that the interrupting capacity of this equipment will be equal to or greater than the maximum available fault current to which it could be exposed.

Response 435.12

Final selection of the transformer impedances and calculation of the available fault currents is an aspect of the detail design which will be performed by an architect engineer during the detail design phase for a specific plant. The inclusion of the compatibility requirement in the SSAR makes it an interface requirement which the architect engineer must meet. The architect engineer's own calculation procedures would require that the interrupting capacity of the switchgear and circuit interrupting devices be compatible with the magnitude of the available fault current.

Question 435.13

The first statement in section 8.3.1.1.6.4 indicates that the only protective trips active on the diesel generators during LOPP or LOCA conditions are the generator differential relays and the engine overspeed trip device. Following statements indicate that the other protective relays are bypassed during LOCA conditions.

(1) Please clarify whether these other protective relays are bypassed only during LOCA or whether they are bypassed during both LOCA and LOPP conditions.

(2) Also verify that the diesel generator protective trips meet the other criteria specified in position C.7 and C.8 of RG 1.9, Rev. 2 (i.e., that they include the capability for (1) testing the status and operability of the bypass circuits, (2) alarming in the control room abnormal values of all bypass parameters, and (3) manually resetting of the trip bypass function (automatic reset not acceptable), and the surveillance system indicates which of the diesel generator protective trips is activated first).

Response 435.13

(1) The text of Section 8.3.1.1.6.4 has been revised (see attachment) to more clearly state the bypass conditions. The generator & bus differential relays, engine overspeed trip, low diesel cooling water pressure (two sensors out of two sensors) and low differential pressure of secondary cooling water (two out of two sensors) are not bypassed during LOCA conditions. All other engine trips are bypassed. No trips are bypassed during LOPP or testing.

(2) The design, installation and operation of the diesel generator will meet the requirements of Regulatory Guide 1.9, Revision 2.

Question 435.14

Section 8.3.1.1.7 states that, in general, non-Class 1E loads are tripped off and thereby automatically isolated from the Class 1E buses by a LOCA or LOPP signal. Please verify that LOCA and LOPP signals are used to trip non-Class 1E loads and the loads are not subsequently resequenced back on automatically.

Response 435.14

The design has been modified so that only LOPP signals are used to trip the loads on the bus.

The ABWR design has also been modified such that the FMCRD drive motors are the only non-Class 1E loads on the Diesel Generator bus (see Response 435.34). The diesels are sized to handle all of these automatically sequenced loads (8.3.1.1.7).

Question 435.15

(1) Section 8.3.1.1.7(1) states that should the Class 1E bus voltage decay to below 70% of its nominal rated value for a predetermined time a bus transfer is initiated and the signal will trip the supply breaker, and start the diesel generator. Please provide the value of “predetermined time” (time delay) associated with bus voltage below 70%.

(2) Also, the last sentence in this section states that large motor loads will be sequence started as required and as shown on Table 8.3-2. Table 8.3-2, however, is only a “D/G Load Table” that does not identify any load sequencing times. Table 8.3-4 on the other hand is entitled “Load Sequence”, but the table is “to be provided by December 31, 1988."Please identify the correct table that will contain load sequencing times.

Response 435.15

(1) The time delay is 0.4 seconds if a LOCA signal is present. It is 3 seconds if there is no LOCA signal.

(2) The correct reference is Table 8.3-4 for the D/G loading sequence. Subsection 8.3.1.1.7 and Table 8.3-4 have been revised accordingly.

Question 435.16

Section 8.3.1.1.7(2) states that if the bus voltage (normal preferred power) is lost during post-accident operation, transfer to diesel generator power occurs as described in (1) above. “(1) above” describes the normal sequence of operations following a LOPP). This, however, does not fully describe all the sequence of operations that need to occur for a LOCA followed by a LOPP.

(1) If the LOPP occurs near the beginning of the LOCA sequence before the diesel generator has accelerated to full speed and voltage on standby what occurs?

(2) If the LOPP occurs in the middle of the LOCA sequence after the diesel generator has accelerated to full speed and voltage on standby what occurs?

(3) If the LOPP occurs following completion of LOCA sequencing with the diesel running in standby at full voltage and frequency what occurs?

(4) How is residual voltage handled when making the transfer from preferred power to the diesel generator with the diesel generator running in standby?

(5) Are non-Class 1E loads sequenced onto the diesel generator when the LOPP follows a LOCA? The LOPP following LOCA sequence is important because, if a LOPP occurs as a result of a LOCA and the subsequent trip of the main generator, it may likely happen several seconds after the LOCA due to a sequence of events resulting in an unstable or overloaded grid.

Response 435.16

(1) If a LOPP occurs near the beginning of the LOCA sequence, before the diesel generator has accelerated to full speed and is on standby; the following events will take place:

(a) The diesel will continue to accelerate to full speed.

(b) When a LOCA signal is received, (before a LOPP) 6.9 kV emergency bus load sequencing timers will start and continue their timing sequence as long as the 6.9 kV emergency bus voltage remains at 70% or greater.

(c) When a LOPP occurs, near the beginning of a LOCA sequence, loss of 6.9 kV emergency bus voltage will cause: (A) The load sequencing timers to stop and reset, (B) The 6.9 kV emergency bus loads to be shed.

(d) When the 6.9 kV emergency bus voltage is greater than 70% (bus now automatically connected to the diesel generator) the load sequencing timers will start and apply appropriate loads to the 6.9 kV emergency bus at preset times.

(2) If a LOPP occurs in the middle of the LOCA sequence, after the diesel generator has accelerated to full speed and voltage and is on standby, the following events will take place:

(a) The 6.9 kV emergency bus loads will be shed.

(b) The diesel generator output will be connected to the diesel bus.

(c) The load sequence timers will start and apply appropriate loads to the 6.9 kV emergency bus at preset times.

(3) If a LOPP occurs following a completion of LOCA sequencing with the diesel generator running in standby at full voltage and frequency the following events will occur:

(a) The 6.9 kV emergency bus loads will be shed.

(b) The diesel generator output will be connected to the 6.9 kV emergency bus.

(c) The load sequence timers will start and apply appropriate loads to the 6.9 kV emergency bus at preset times.

(4) To assure that the residual voltage has decayed to an acceptable value, the loads will not be tripped from the 6.9 kV bus until the residual voltage is at or below 30% of its initial value. Loads will be tripped before a permissive signal is given to close the D/G breakers. This permissive is most important if a LOPP occurs during a LOCA, or any other time that the diesel is required to pickup a bus from the idling condition.

(5) Some non-Class 1E loads are sequenced on to the non-Class 1E sections of the 6.9 kV emergency buses as shown on Table 8.3-4. These are the 250 VDC battery chargers and associated constant voltage, constant frequency (CVCF) power supplies, lighting, and some non-Class 1E instrument transformers. The diesels have been sized to supply this equipment during a LOCA.

Question 435.17

Section 8.3.1.1.7 does not have a scenario addressing the sequence of events that occurs for a LOCA without a LOPP. Please address this scenario and add it to section 8.3.1.1.7. If LOCA loads are sequenced on to the offsite power system, the sequencer used should be separate from that used to sequence loads on to the onsite power system. If this is not the case provide a detailed analysis to demonstrate that there are no credible sneak circuits or common failure modes in the sequencer design that could render both onsite and offsite power sources unavailable. In addition provide information concerning the reliability of your sequencer and reference design detailed drawings.

Response 435.17

When a LOCA occurs, with or without a LOPP, the load sequence timers are started if the 6.9 kV emergency bus voltage is greater than 70% and loads are applied to the bus at the end of preset times.

Each LOCA load has an individual load sequence timer which will start if a LOCA occurs and the 6.9 kV emergency bus voltage is greater than 70%, regardless of whether the bus voltage source is preferred power or the diesel generator. The load sequence timers are part of the low level circuit logic for each LOCA load and do not provide a means of common mode failure that would render both onsite and offsite power unavailable. If a timer failed, the LOCA load could be applied manually provided the bus voltage is greater than 70%.

This information has been added to Subsection 8.3.1.1.7 as requested.

Question 435.18

Section 8.3.1.1.7(3) addresses the LOCA following LOPP scenario, however it provides few details.

(1) If the LOCA occurs just after the LOPP but prior to load sequencing of the LOPP loads what occurs?

(2) If the LOCA occurs in the middle of the LOPP sequence, what occurs?

(3) If the LOCA occurs following completion of the LOPP sequence, what occurs?

(4) Are any LOCA loads not already energized simply sequenced on to whatever LOPP loads are on-line or are some or all of the LOPP loads load-shed first?

(5) Are non-Class 1E loads tripped by the LOPP signal or the LOCA signal?

(6) Is the diesel generator circuit breaker tripped at any time to accomplish the LOCA following LOPP response?

Response 435.18

(1) If a LOCA occurs just after a LOPP but prior to load sequencing of the LOPP loads, the following events occur:

   (a) Following a LOPP the 6.9 kV emergency bus loads are shed and the diesel generator output is connected to the diesel bus. This function is not dependent upon a LOCA.

   (b) When a LOCA occurs (just after the LOPP) and when the 6.9 kV emergency bus voltage is greater than 70%, the load sequence timers start and apply the appropriate 6.9 kV emergency bus LOPP and LOCA loads at preset times.

(2) If a LOCA occurs in the middle of a LOPP loading sequence, sequencing of loads that are applied to the 6.9 kV emergency bus after a LOPP will continue without interruption. The drywell cooling fans will be tripped off the bus if they have been started. All other auto-loaded LOPP loads are required for LOCA and will remain on the buses. The diesel generators are capable of accepting the load blocks in any loading order.

(3) If a LOCA occurs following completion of the LOPP sequence, loads which are only applied to the 6.9 kV emergency bus in the event of a LOCA will be sequenced onto the bus. Loads not required for a LOCA are tripped off.

(4) In the event of a LOCA following completion of a LOPP sequence, LOPP loads remain on the bus. Additional loads required for a LOCA are sequenced onto the bus.

(5) Non-Class 1E loads are tripped by a LOCA signal and not by a LOPP.

(6) The diesel generator circuit breaker is not tripped to accomplish the LOCA loading following a LOPP response.

Question 435.19

Section 8.3.1.1.7(4) states that if a LOCA occurs when the diesel generator is paralleled with the preferred power source during test and the test is being conducted from the local control panel, control must be returned to the main control room or the test operator must trip the diesel generator breaker. Because the diesel generator is not available to automatically respond to the LOCA in this circumstance it is considered to be bypassed and automatic indication of the bypass should be provided in the control room in accordance with RG 1.47. Please verify that this is the case.

Response 435.19

Section 8.3.1.1.7(5) has been changed to read:

"If a LOCA occurs when the diesel generator is paralled with either the normal preferred power or the alternate preferred power source, the D/G will automatically be disconnected from the 6.9 kV emergency bus regardless of whether the test is being conducted from the local control panel or the main control room."

Question 435.20

In section 8.3.1.1.7(5) the description of what occurs following a LOPP during a diesel generator paralleling test with the normal preferred power source is different from that described for a paralleling test with the alternate preferred power source. In the first case it is stated that the diesel generator circuit breaker is automatically tripped if the normal preferred power supply is lost during the test, and in the second case it is stated that the diesel generator breaker will trip on overcurrent if the alternate source is lost during the test.

(1) If what occurs during the two scenarios are different describe the differences and why they are different.

(2) If the diesel generator breaker is automatically tripped identify what signal will trip it since an undervoltage condition may not be generated.

(3) If the diesel generator breaker is tripped on overcurrent verify that no lock-outs will be generated to preclude automatic sequencing of LOPP loads.

(4) Verify that in either case the diesel generator will be returned to the isochronous mode prior to load sequencing.

(5) Describe what happens if a diesel generator bus fault occurs during the paralleling test.

Response 435.20

(1) The events following a LOPP during diesel generator parralleling tests with normal preferred power source are essentially the same as those with alternate preferred power source. In the first case, the diesel generator circuit breaker should be automatically tripped by a signal from the main power transformer or high voltage breaker lockout circuits when there is a disturbance on the off-site source. If this trip does not occur, the DG breaker will be tripped by its overcurrent relay. In the second case, the diesel generator breaker is tripped by the lockout relays for the reserve auxiliary transformer or its high voltage breaker. If this trip does not occur, the DG breaker will be tripped by its overcurrent relay.

(2) During paralleling tests, if the alternate preferred power source is lost the diesel generator will be tripped as described in (a) above.

(3) If the diesel generator is tripped on overcurrent, lock-outs will not be generated to preclude automatic sequencing of LOPP loads.

(4) The diesel generator will be returned to the isochronous mode prior to load sequencing.

(5) If a 6.9 kV emergency bus fault occurs during the paralleling tests, all power supply breakers to the bus will be tripped and locked out by the bus differential current relays. This is true for a bus fault on any 6.9 kV emergency bus.

Question 435.21

(1) Section 8.3.1.1.8.2 is entitled “Ratings and Capability” but it provides no diesel generator ratings. Please provide the continuous load rating and short time overload rating of the diesel generators.

(2) In addition this section states that each diesel generator is capable of reaching full speed and voltage within 13 seconds after the signal to start. Does the diesel generator contain a ramp generator or some other circuitry to provide a controlled acceleration to operating speed during this 13 second starting period? If so, how will the reliability of this circuit be demonstrated?

Response 435.21

(1) The continuous load rating of the diesel generator is 6450 kVA. The overload rating of the diesel generator is 110% of the rated output for a two (2) hour period.

(2) The details of the diesel generator design are beyond the scope of the Licensing Review Bases (LRB)document.It is therefore an interface requirement that this response be provided by the applicant.

Question 435.22

Section 8.3.1.1.8.5 lists the diesel engine and its generator breaker protective trips and other off-normal conditions that are annunciated in the main control room and/or locally. Please identify which of these conditions are annunciated in the main control room and which are annunciated locally.

With regard to the diesel generator alarms in the control room: A review of malfunction reports of diesel generators at operating nuclear plants has uncovered that in some cases the information available to the control room operator to indicate the operational status of the diesel generator may be imprecise and could lead to misinterpretation. This can be caused by the sharing of a single annunciator station to alarm conditions that render a diesel generator unable to respond to an automatic emergency start signal and to also alarm abnormal, but not disabling, conditions. Another cause can be the use of wording of an annunciator window that does not specifically say that a diesel generator is inoperable (i.e., unable at the time to respond to an automatic emergency start signal.) when in fact it is inoperable for that purpose.

Review and evaluate the alarm and control circuitry for the diesel generators in the ABWR design to determine how each condition that renders a diesel generator unable to respond to an automatic emergency start signal is alarmed in the control room. These conditions include not only the trips that lock out the diesel generator start and require manual reset, but also control switch or mode switch positions that block automatic start, loss of control voltage, insufficient starting air pressure or battery voltage, etc. This review should consider all aspects of possible diesel generator operational conditions, for example test conditions and operation from local control stations. One area of particular concern is the unreset condition following a manual stop at the local station which terminates a diesel generator test and prior to resetting the diesel generator controls for enabling subsequent automatic operation.

Provide the details of your evaluation, the results and conclusions, and a tabulation of the following information:

(1) All conditions that render the diesel generator incapable of responding to an automatic emergency start signal for each operating mode as discussed above;

(2) The wording on the annunciator window in the control room that is alarmed for each of the conditions identified in (a);

(3) Any other alarm signals not included in (a) above that also cause the same annunciator to alarm;

(4) Any condition that renders the diesel generator incapable of responding to an automatic emergency start signal which is not alarmed in the control room; and

(5) Any proposed modifications resulting from this evaluation. For additional information and the staff position on this item see Branch Technical Position (BTP) PSB-2 in the Standard Review Plan (NUREG-0800). Describe how the ABWR design meets each position of BTP PSB-2.

Response 435.22

Subsection 8.3.1.1.8.5 has been revised to distinguish between the local and control room annunciations.

The diesel generator, auxiliary systems and circuitry are unique depending on the supplier. Likewise, conditions which could render the diesel generator unable to respond to automatic emergency start signals could vary, depending on the unique design of the units. Such a detailed analysis is hardware specific, and therefore beyond the generic intent of the Licensing Review Bases (LRB) for the ABWR Standard Plant. However, the requirements to meet Regulatory Guide 1.47 and BTP PSB-2 are committed in Subsection 8.3.1.2.1 [(2)(d) and (3)(e) respectively].

Question 435.23

Section 8.3.1.2.1 states that there are four 6.9 kV electrical divisions, three of which are independent load groups backed by individual diesel generator sets. Figure 8.3-2 entitled “6.9 kV System Single Line” however shows only the three divisions backed by diesel generators. It does not show the fourth 6.9 kV division referred to in section 8.3.1.2.1 Please clarify this discrepancy and show the fourth division, if it exists, in Figures 8.3-1 and 8.3-2.

Response 435.23

It is true that the reactor can be safely shut down from the control room with only one of the three load groups available. However, the time to reach shutdown temperatures in extended due to the availability of only one RHR heat exchanger. Also, there is a slight risk that one division may not be sufficient given a very low probability combination of certain postulated failures combined with redundant divisions being out of service. For these reasons, the SSAR statements conservatively commit to the single-failure criteria, with subsequent shutdown capability of the remaining divisions.

Question 435.24

In section 8.3.1.2.1 it is stated that the standby power system redundancy is based on the capability of any two of the four divisions (two of three load groups) to provide the mininum safety functions necessary to shut down the unit in case of an accident and maintain it in the safe shutdown condition. Why can't the unit be shut down in case of an accident with only one of the three load groups available? Identify the systems or loads needed that require that two of the three load groups be available.

Response 435.24

It is true that the reactor can be safely shut down from the control room with only one of the three load groups available. However, the time to reach shutdown temperatures is extended due to the availability of only one RHR heat exchanger. Also, there is a slight risk that one division may not be sufficient given a very low probability combination of certain postulated failures combined with redundant divisions being out of service. For these reasons, the SSAR statements conservatively commit to the single-failure criteria, with subsequent shutdown capability of the remaining divisions.

Question 435.25

In sections 8.1.3.1.2.3(6) and 8.3.1.2.1(3) it is stated that the undervoltage detection schemes for the 6.9 kV offsite power feeders is outside the nuclear island scope of supply, and BTP PSB-1 is therefore imposed as an interface requirement for the applicant. On the contrary however, the purpose of the undervoltage protection logic required by the BTP is to protect and ensure the adequate operation of safety equipment at the 6.9 kV safety buses and below.

It is required to be qualified Class 1E and should be physically located at and electrically connected to the Class 1E 6.9 kV switchgear. The undervoltage protection logic therefore protects equipment that is within the nuclear island scope, monitors voltage on the 6.9 kV safety buses that are within the nuclear island scope, and should be located in the Class 1E 6.9 kV switchgear that is within the nuclear island scope.

The setpoints of the undervoltage relays should be chosen to protect and ensure adequate operation of all safety loads down to the 120 volt level. The only connection between the requirements of the undervoltage protection and the 6.9 kV offsite feeders is that the feeders should be required to maintain adequate voltages to the safety buses under all operating conditions to ensure acceptable operation of safety equipment and to ensure that the undervoltage relays will not be unintentionally tripped. This should be accomplished by imposing appropriate interface requirements on the offsite feeders.

You should therefore provide the second level undervoltage protection required by the BTP and address the other positions of BTP PSB-1.

Response 435.25

The design meets the requirements of PSB-1. Subsections 8.1.3.1.2.3(6) and 8.3.1.2.1(3) have been revised accordingly. A new Subsection 8.3.1.1.7(8) has been added to describe the degraded voltage protection provided for the safety related buses.

Question 435.26

Clarify statement (1)(b) of section 8.3.1.2.2 regarding conformance of the SSLC power supply to GDC 2, 4, 17, and 18. If the SSLC power supply is not in conformance with any part of the GDCs, so state and justify.

Response 435.26

All conformance statements in the analysis sections of Chapter 8 have been modified to state full compliance without the applicability caveat.

There are no non-conformances with the GDCs. The “as applicable” statements were intended only to differentiate between those portions of the GDCs we interpreted to be applicable to the plant as a whole, rather than to individual components. However, it is better to delete such statements if they are construed to mean any degree of non-conformance.

Question 435.27

Section 8.3.1.2.2 states that the SSLC redundancy is based on the capability of any two of the four divisions to provide the minimum safety functions necessary to shut down the unit in case of an accident and maintain it in the safe shutdown condition. Why can't the unit be shut down in case of an accident with only one of the four divisions available? Identify the systems or loads needed that require that two of the four divisions be available.

Response 435.27

(See response 435.24).

Question 435.28

In section 8.3.1.2.4, item (1) states that certified proof tests are performed on cable samples to certify 60 year life by thermal aging. Subsequent items, (2) thru (5), identify various cable attributes such as radiation resistance, mechanical/electrical endurance, flame resistance, and level of gas evolution that are also demonstrated by certified proof tests performed on cable samples. Do the tests identified in items (2) thru (5) demonstrate that the cables have an acceptable level of the particular attributes at the end of their 60 year life? How is this demonstrated?

Response 435.28

The SSAR text for Chapter 8 has been rewritten, and this information on cables is now found in 8.3.3.8.1.

The thermal aging test provides a reasonable expectancy of a 60-year life for the cable. The other tests and specifications (8.3.3.8.1) assure that individual parameters such as flame resistance, radiation resistance, etc., have a reasonable expectance of remaining within acceptable limits of change for each parameter over the 60-year life of the plant. The method of reaching a conclusion is unique for each type of test. The details of each test are imposed as an interface requirement for the applicant (8.3.4.3).

Question 435.29

(1) Section 8.3.1.3.1 discusses the means used to physically identify safety related power systems equipment. It states that all cables for Class 1E systems and asociated circuits (except those routed in conduit) are tagged every 4.6m. In addition all cables

are tagged at their terminations with a unique identifying number. R.G. 1.75, Rev. 2 states that these cables should be marked at intervals not to exceed 1.5m and the preferred method of marking the cable is color coding. IEEE-384-1974 also states that these cable markings shall be applied prior to or during installation. Please verify that these recommendations are met or justify the differences. If exception is taken to position C.10 of R.G. 1.75, Rev. 2 regarding cable marking, the exception should be identified in section 8.1.3.1.2.2 and wherever the exception is applicable.

(2) Section 8.3.1.3.1 also describes the marking of conduit and cable trays. Please verify that in accordance with the requirements of IEEE-384-1974 these markings are applied prior to the installation of cables.

(3) The identification requirements for instrumentation and control system cables and raceways described in items (3) and (4) of section 8.3.1.3.2.1 should be the same as those for power systems provided in section 8.3.1.3.1 subject to the above comments.

Response 435.29

Chapter 8 has been revised. The identification criteria for cables and raceways is now contained in 8.3.3.5.1.2 and 8.3.3.5.1.3. The identification criteria fully complies with the requirements of R.G. 1.75, Rev. 2, and IEEE-384-1974 regarding marking of cables, conduit, cable trays and raceways.

Question 435.30

Provide a description of the ABWR cable spreading areas in the ABWR SSAR. Describe how the requirements specified in section 5.1.3 of IEEE-384-1974 (as modified by position C.12 of R.G. 1.75) are met.

Response 435.30

A description of the cable spreading areas is not applicable to the ABWR because the majority of the signals will be multiplexed to the control room. Therefore, a cable spreading area is not in the plant layout.

Question 435.31

(1) Item (7) of section 8.3.1.4.1.2 discusses electric penetration assemblies. It states that electric penetration assemblies of different Class 1E divisions are separated by distance, separate rooms or barriers and/or locations on separate floor levels. With regard to separation by distance, no specifics are given on what is the minimum distance provided between redundant penetrations. As required in IEEE-384-1974 the minimum physical separation for redundant penetrations should meet the requirements for cables and raceways given in section 5.1.4 of that standard. Please verify that this is the case.

(2) Item (7) of section 8.3.1.4.1.2 also states that power circuits going through electric penetration assemblies are protected against overcurrent by redundant overcurrent interrupting devices to avoid penetration damage. The use of redundant overcurrent interrupting devices should not be limited to only power circuits going through electric penetration assemblies. They should be used on all penetration electric circuits (including instrumentation and control circuits) where the available fault current is greater than the continuous rating of the electric penetration assembly. If the maximum available fault current is less than the continuous rating of the penetration, but is greater than the continuous rating of a device upstream of the penetration whose failure can result in fault current levels in excess of the penetration continuous rating (such as a control power transformer), then redundant overcurrent interrupting devices should be used. Please verify that this is the case.

(3) Provide the fault current clearing-time curves of the electrical penetrations' primary and secondary current interrupting devices plotted against the thermal capability (I^2t) curve of the penetration (to maintain mechanical integrity). Provide a simplified one-line diagram on this drawing showing the location of the protective devices in the penetration circuit, and indicate the maximum available fault current of the circuit.

(4) Where external control power is needed for tripping electrical penetration breakers, signals for tripping the primary and backup breakers should be independent, physically separated and powered from separate sources. Verify that your design complies and identify the power supplies to the redundant circuit breakers.

Response 435.31

(1) The physical separation between redundant penetrations meets the requirements for cables and raceways given in Section 6.1.5 of IEEE-384-1981.

(2) It is a design requirement that redundant overcurrent interrupting devices be provided for electrical circuits going through containment penetrations, if the maximum available fault current (including failure of upstream devices) is greater than the continuous current rating of the penetration.

(3) The detail design for the current interrupting devices for the electrical penetrations has not been performed and is beyond the scope of the Licensing Review Bases (LRB) document. It is an interface requirement for the applicant to supply this information.(See Subsection 8.3.4.4)

(4) In general, breakers and starters will be backed up by properly selected current limiting fuses. Smaller circuits will employ redundant fuses. Specific identification of power supplies for redundant breakers, if utilized, is an interface requirement to be supplied by the applicant.(See Subsection 8.3.4.4)

Question 435.32

Section 8.3.1.4.2.1 identifies the standards that are used for the separation of equipment for the systems referred to in subsection 7.1.1.3, 7.1.1.4, and 7.1.1.6 (safety-related control and instrumentation systems). IEEE-384-1974 however is not listed. The separation of equipment in these systems should comply with the requirements of this standard. Please verify that this is the case.

In addition, the listed standards and requirements are not identified as being applicable to subsection 7.1.1.5 (safety-related display instrumentation). Please verify that they are indeed applicable to this subsection.

Response 435.32

IEEE-384 is addressed in Tables 7.1-2 and 8.1-1, as endorsed by Regulatory Guide 1.75. Since the requirements of this guide envelope and endorse IEEE-384, it is not necessary to address IEEE-384 separately.

To be consistent with the Standard Review Plan format (SRP Tables 7-1, 7-2 and 8-1), and to avoid unnecessary redundancy in the text, we have not addressed the IEEE-standards separate from the Regulatory Guides which endorse them. However, since IEEE-379 was inadvertently mentioned in addition to RG 1.53, we have modified and clarified the paragraph per the attached mark-up.

Also, the separation requirements do apply to the Safety Related Display. Therefore, a reference to Subsection 7.1.1.5 has been added.

Question 435.33

Items (4) and (5) in section 8.3.1.4.2.2.2 state that spatial separation in general plant areas and in cable spreading areas shall equal or exceed the minimum allowed by IEEE-384. IEEE384-1974 however provides two means for establishing minimum physical separation distances. The first, which is specified in section 5.1.1.2 of the standard allows the minimum separation distance to be established by analysis based on tests of the proposed cable installation. The second, which is specified in sections 5.1.3 and 5.1.4 of the standard, specifies specific minimum physical separation distances that must be maintained.

Please clarify whether you intend to meet the specific distances specified in the standard or whether you intend to establish your own separation distances through analysis based on tests. The prefereble option is to meet the specific distances specified in IEEE-384-1974.

Response 435.33

In accordance with the Licensing Review Bases (LRB) document, the certification is based on IEEE-384-1981. The specific separation distances listed in IEEE-384-1981 will be met wherever possible and practical. In addition, the ABWR will provide separation by fire barriers sufficient to meet the requirements of letter SECY-89-013. Any exceptions are identified and justified in 9A.5.5.

Question 435.34

(1) Section 8.3.1.4.2.2.4 discusses the use of isolation devices in power circuits. It states that non-Class 1E instrument and control circuits will not be energized from a Class 1E power supply unless potential for degradation of the Class 1E power source can be demonstrated to be negligible by effective current or voltage limiting (i.e., functional isolation) under all design basis conditions. Please explain what this means. Does it imply that no isolation device will be used if no credible failure modes can be identified that will result in fault currents? Qualified isolation devices should be used in all cases where a non-Class 1E circuit is connected to a Class 1E power supply.

(2) It also states in Section 8.3.1.4.2.2.4 that Class 1E power supplies which interface non-Class 1E circuits are required to be disconnected or otherwise decoupled from the non-Class 1E circuits such that conditions of the non-Class 1E portion of the system cannot jeopardize the Class 1E portions (e.g., by a current limiting element). Verify that, if overcurrent interrupting devices such as fuses or circuit breakers are used as isolation devices, redundant qualified interrupting devices will be used at the Class 1E/non-Class 1E interfaces. List all the locations where there is an interface between a Class 1E power supply and non-Class 1E circuit. Identify the isolation device that is used at the interface.

(3) Where redundant Class 1E power circuits interface with a common non-Class 1E system such as a computer, the isolation devices used should ensure that a worst case abnormal occurence (fault, overvoltage, voltage surge or spike, etc.) on one of the Class 1E power circuits cannot migrate through the non-Class 1E system and affect the redundant Class 1E circuit. This is in addition to the normal criteria for isolation devices that require that any worst case occurences (maximum credible faults, etc.) in the non-Class 1E system not affect the Class 1E system.

Response 435.34

The design and Chapter 8 text has undergone extensive changes subsequent to this question. Most non-Class 1E loads (both AC and DC) now receive power from their own non-Class 1E load group, which does not have any interface with Class 1E power sources. Three independent non-Class 1E batteries are provided for these load groups. The only cases where non-Class 1E loads receive power from Class 1E sources are the FMCRD drive motors, which derive power from Division I via zone-select interlocked circuit breakers (8.3.1.1.1), and the standby/emergency lighting systems (9.5.3). Some non-power instrumentation interfaces exist for annunciators and data loggers (8.3.3.6.2.2.4).

With respect to questions (1), (2), and (3); the latest ABWR design does not allow non-Class 1E sources power loads to be connected to Class-1E sources except those items mentioned above. The FMCRD drive motor loads are limited to Division I only. The lighting circuits are considered Class 1E Associated because light bulbs cannot be qualified to operate throughout

a seismic event. Such bulbs can only fail “open-circuit” and therefore cannot jeopardize the upstream Class 1E power sources (9.5.3). Previous information in the SSAR text, which prompted these questions, is no longer part of the design and has been deleted.

Question 435.35

Item (4) of section 8.3.1.4.2.3.1 states that the scram solenoid conduits will have unique identification but no specific separation requirements, and the scram group conduits may run in the same raceway with other divisional circuits. If the scram group conduits are run in the same raceway with other divisional circuits or if they have less than the minimum separation from Class 1E circuits, they must be treated as associated circuits and must meet the requirements specified in section 4.5 of IEEE-384-1974. Please verify that this is the case, and identify the specific separation requirements that will be applied to the scram group conduits when they become associated circuits.

Response 435.35

The statement in item (4) related to “no specific separation requirements” was not correct. There are specific separation requirements for the conduits containing the RPS wiring associated with each of the four scram groups, i.e., the conduits required from the scram actuating devices to the scram solenoid fuse panels, and from the fuse panels to the two solenoids of each of the individual scram pilot valves. Subsection 8.3.3.6.2.3.1 (formerly 8.3.1.4.2.3.1) has been completely revised.

Individual grounded steel conduits will be provided to contain the scram solenoid wiring of each of the four scram groups to protect this wiring from hot shorts to any other wiring. Individual conduits will also be provided for the A solenoid wiring and for the B solenoid wiring in the same scram group.

The scram group conduits will have unique identification and will be treated essentially as if they are separate enclosed raceways, i.e., the conduits containing the scram solenoid group circuit wiring will be physically separated from raceways which contain either divisional or “non-divisional” (non-safety-related) circuits. Any scram group conduit may be routed alongside of any raceway containing either safety-related circuits (of any division), or any raceway containing non-safety-related circuits, as long as the conduit itself is not within the boundary of the raceway which contains either the divisional or non-safety-related circuits. Each scram conduit will be physically separated by at least one (1) inch from either metal enclosed raceways or non-enclosed raceways.

Question 435.36

Item (6) of section 8.3.1.4.2.3.2 states that any electrical equipment and/or raceways for RPS or ESF located in the suppression pool level swell zone will be designed to satisfactorily complete their function before being rendered inoperable due to exposure to the environment created by the level swell phenomena. This information is not sufficient for us to evaluate the effects on flooding of electrical equipment. Please identify all electrical equipment, both safety and non-safety, that may become submerged as a result of the suppression pool level swell

phenomena or as a result of a LOCA. For all such equipment that is not qualified for service in such an environment provide an analysis to determine the following:

(1) The safety significance of the failure of this equipment (e.g., spurious actuation or loss of actuation function) as a result of flooding.

(2) The effects on Class 1E electrical power sources serving this equipment as a result of such submergence, and

(3) Any proposed design changes resulting from this analysis.

Response 435.36

Electrical equipment that may be submerged as a result of suppression pool level swell phenomena, or as the result of a LOCA, is as follows:

(1) Suppression pool temperature monitors (48 each): Temperature monitors are required for safety. Electrical wiring for each sensor is to be terminated, for sensor replacement or maintenance, in the wetwell. The design specifications require that terminations be sealed such that operation would not be impaired by submersion due to pool swell or LOCA.

(2) Suppression pool level monitors (6 each) and suppression chamber pressure monitors (2 each): This equipment is required for safety. The level and pressure transmitters are located outside of the wetwell. Therefore, their operation will not be impaired by pool swell or LOCA.

(3) Suppression chamber free volume temperature monitors (4 each): Temperature monitors are required for safety. The design specifications require that terminations be sealed such that operation would not be impaired by submersion due to pool swell or LOCA.

Question 435.37

In the description of the DC power system in section 8.3.2.1 it is stated that the operating voltage range of Class 1E DC loads is 105 to 140 V. It is also stated that the maximum equalizing charge voltage for Class 1E batteries is 140 VDC, and the DC system minimum discharge voltage at the end of the discharge period is 1.75 VDC per cell.

For a 125 VDC lead acid battery with 60 cells, 1.75 VDC per cell equates to a final discharge voltage of 105 VDC at the battery terminals. This is the same as the stated minimum operating voltage of the Class 1E DC loads. There is therefore no allowance for voltage drop from the battery terminals to the terminals of the Class 1E loads at the final voltage value of 1.75 VDC per cell. Please address this discrepancy.

Also, provide the results of your DC voltage analysis showing battery terminal voltage and worst case DC load terminal voltage at each step of the Class 1E battery loading profile. See the following question with regard to the battery loading profile.

Response 435.37

The required operating range for DC loads is 100 to 140 VDC. This leaves 5 volts for the voltage drop from the battery terminals to the terminals of the Class 1E loads. The corrected range is now provided in 8.3.2.1.3.1.

A worst case DC voltage analysis is beyond the scope of the SSAR, as defined by the Licensing Review Bases (LRB) document. However, it is an interface requirement for this to be performed as part of the detail design of the plant.(See Subsection 8.3.4.6)

Question 435.38

Section 8.3.2.1 addresses the DC power systems in general and section 8.3.2.1.3.2 specifically addresses battery capacity. With regard to battery capacity, section 8.3.2.1.3.2 states that battery capacity is sufficient to satisfy a safety load demand profile under the conditions of a LOCA and loss of preferred power, and the batteries have sufficient stored energy to operate connected essential loads continuously for at least two hours without recharging.

(1) Provide the stated load demand profiles and a breakdown of the loading during this demand.

(2) Provide the manufacturer's ampere-hour rating of the batteries at the two hour rate and at the eight hour rate, and provide the one minute ampere rating of the batteries.

(3) Address station blackout with regard to battery capacity. If a station blackout coping analysis is being prepared for the ABWR, provide a battery load demand profile for the coping duration. Provide a breakdown of the loading during this demand.

Response 435.38

(1) Based on information available as of September, 1989, the load demand profile for the 125V batteries under LOCA conditions with loss of preferred power is estimated as follows:

Min.	Div I Amps	Div II Amps	Div III Amps	Div IV Amps	Total
0 - 1	1000	448	448	224	2120
1 - 2	573	248	248	124	1193

Min.	Div I Amps	Div II Amps	Div III Amps	Div IV Amps	Total
2 - 5	339	252	252	127	970
5 - 6	405	301	301	150	1157
6 - 10	338	252	252	126	968
10 - 11	405	301	301	151	1158
11 - 15	339	252	252	126	969
15 - 16	405	301	301	151	1158
16 - 20	339	252	252	126	969
20 - 21	405	301	301	151	1158
21 - 60	339	252	252	126	969
60 - 120	339	252	252	126	969
RatedAH	4000	3000	3000	1400	
AH/2 hrs	702.8	514.5	514.5	257.2	

(1) The manufacturer's ampere-hour rating of the batteries at the two hour rate, the four hour rate and the one minute ampere rating is beyond the License Review Bases (LRB) document definition. However, this information is requested as a COL action item (8.3.4.6).

(2) The Combustion Turbine Generator (CTG) is an alternate AC (AAC) power source. Therefore, no scoping analysis is required, per Regulatory Guide 1.155. However, Divisions II, III and IV could be powered down to an output of essentially zero. The load demand on Division I would be intermittant as the RCIC cycles on and off and would be equal to, or less than, the value shown above for Division I during any two hour period. For additional information related to dealing with a station blackout refer to Appendix 1C.

Question 435.39

In section 8.3.2.1 it is stated that each 125 VDC battery is provided with a charger and a standby charger shared by two divisions, each of which is capable of recharging its battery from a discharged state to a fully charged state while handling the normal, steady-state DC load.

(1) Provide the continuous and current-limited output ratings of the battery chargers.

(2) In accordance with position C.1.b of R.G. 1.32, Rev. 2 verify that the capacity of the battery charger supply is based on the largest combined demands of the various steady-state loads and the charging capacity to restore the battery from the design minimum charge state to the fully charged state, irrespective of the status of the plant during which these demands occur.

(3) Verify that the battery charger can operate stably as a battery eliminator (i.e., with the charger remaining connected to supply the loads while the battery is disconnected from the loads).

(4) Verify that no reverse DC current can flow into the battery charger output from the battery, during periods of low AC input battery charger voltage or during total loss of AC input voltage to the charger.

Response 435.39

(1) The rated output current rating of the Division IV charger is 200 amperes. The rated output of all the other chargers is 500 amperes. The current limited output of the chargers is 120% of their rating.

(2) The battery charger capacities meet the requirements of position C.1.b of Regulatory Guide 1.32, Rev. 2.

(3) The battery chargers will operate with the battery disconnected.

(4) No reverse DC current will flow in the chargers during periods of low or no AC input voltage to the charger.

Question 435.40

Section 8.3.2.1 and Figure 8.3-8 identify the connection of the non-Class 1E 250 VDC battery chargers to divisions 1 and 3 of the Class 1E system. Identify the isolation devices used at this interface. Are the Class 1E breakers shown at the interface,tripped on an accident signal? If not, they should be, or else redundant qualified breakers should be provided.

Response 435.40

The distribution system and the SSAR have undergone extensive design changes since this question was originally written. The 250 VDC battery chargers are fed from the non-Class 1E 480V AC buses, which are in turn fed from the plant non-Class 1E investment protection (PIP)

buses backed by the non-Class 1E combustion turbine generator (CTG). These sources have no direct connections to any Class 1E power source, and no isolation is required (8.3.2.1.3.3).

Question 435.41

Section 8.3.2.1.2 very generally identifies the type of loads fed from the 125 VDC Class 1E power system. Please provide a more specific breakdown of the loads fed from each division of the 125 VDC Class 1E power system.

Response 435.41

A complete load list is provided in Appendix 20B which is current as of September, 1989. There will be some shuffling of individual loads as the detail design progresses.

Question 435.42

(This question was later retracted by the NRC staff. Therefore, no response is required.)

Question 435.43

Section 8.3.2.1.3.3 states that battery rooms are ventilated to remove the minor amounts of gas produced during the charging of batteries. Verify that, in accordance with position C.1 of R.G. 1.128 the ventilation system will limit hydrogen concentration to less than two percent by volume at any location within the battery area.

Also, in accordance with position C.6.e of R.G. 1.128, verify that ventilation air flow sensors are installed in the battery rooms with their associated alarms installed in the control room.

Response 435.43

The ventilation system for the battery room will maintain the concentration of hydrogen to less than 2% as a design requirement. The airflow sensors are described in Subsection 9.4.1.2, which has been revised to reflect the 2% limit on hydrogen concentration.

Question 435.44

With regard to the DC power systems, section 8.3.2.2.1 states that all abnormal conditions of important system parameters such as charger failure or low bus voltage are annunciated in the main control room and/or locally. Please identify the specific meters and alarms used for monitoring the status of the Class 1E DC power systems and indicate whether they are located in the main control room and/or locally. As a minimum the following indications and alarms should be provided in the control room:

- Battery current (ammeter-charge/discharge)
- Battery charger output current (ammeter)
- DC bus voltage (voltmeter)
- Battery charger output voltage (voltmeter)

- Battery discharge alarm DC bus undervoltage and overvoltage alarm
- DC bus ground alarm (for ungrounded system)
- Battery breaker open alarm
- Battery charger output breaker open alarm Battery charger trouble alarm (one alarm for a number of abnormal conditions which are usually indicated locally)

Because the ABWR is an advanced reactor design, you should consider the use of a state-of-the-art battery and electrical system monitoring system to assure immediate notification of battery and electrical system problems and to provide for post event sequence analysis. This system should provide for the monitoring of at least the individual cell parameters of the batteries and the status of the various electrical system circuits, and ideally should provide for monitoring the status of all AC and DC system circuits down to and including all control circuits.

Response 435.44

As a minimum the following indications and alarms will be provided in the control room:

(1) Battery current (ammeter-charge/discharge)

(2) Battery charger output current (ammeter)

(3) DC bus voltage (voltmeter)

(4) Battery charger output voltage (voltmeter)

(5) Battery discharge alarm

(6) DC bus undervoltage and overvoltage alarm

(7) DC bus ground alarm (for ungrounded system)

(8) Battery breaker open alarm

(9) Battery charger output breaker open alarm

(10) Battery charger trouble alarm (one alarm for a number of abnormal conditions which are usually indicated locally)

The ABWR utilizes technology which has been proven by prior applications, where possible. It meets the applicable regulatory requirements. We do not plan to use the type of battery monitoring system suggested unless it becomes a manufacturer's standard.

Question 435.45

Section 8.3.3.1 states that conductors are specified to continue to operate at 100% relative humidity with a service life expectancy of 40 years. The following sentence states however that the Class 1E cables are designed to survive the LOCA ambient condition at the end of the 60-yr. life span. If the intent is to qualify the cables for the 60-year life of the plant, why is a service life expectancy of only 40 years specified for the 100% relative humidity condition?

Response 435.45

Subsection 8.3.3.1 has been revised to indicate that conductors are specified to continue to operate at 100% relative humidity with a service life expectancy of 60 years.

Question 435.46

The following questions pertain to Table 8.3-1 "D/G Load Table-LOCA," Table 8.3-2 "D/G Load Table - LOPP," and Table 8.3-3 "Notes for Tables 8.3-1 and 8.3-2:"

(1) Please provide a translation for the acronyms used in these tables.

(2) Please correct the numerous errors/discrepancies between Tables 8.3-1 and 8.3-2 regarding the ratings of the loads. There are many instances where the rating of an identical piece of equipment is different in Table 8.3-1 from that given in Table 8.3-2.

(3) Please explain why the loads shown on the diesel engine are larger than their rated values. If this is to account for losses through the generator please explain the advantage of calculating the loads on the diesel engine versus the more commonly used means of calculating the loads on the output of the diesel's generator. Provide the factors and their rationale used for increasing the various loads from their rated values, since the loads are not all increased a like amount.

(4) Provide a more complete breakdown of the loads identified in the category "Other Loads".

(5) Why is the load identified as "NPSS CVCF" listed as 31.8 kW for the D/G "c" LOCA load while it is listed as 37.9 kW for the D/G "c" LOPP load? In all other cases LOCA and LOPP loads are the same value if they are energized under both conditions.

(6) I do not understand note (5). It says, "Division III HPCF pump motor starts by L2 signal on the case of loss of preferred power (LOPP)." Table 8.3-2 however shows the HPCF pumps running on both divisions II and III (B and C) during a LOPP. Do one or both motors start and run during a LOPP? Note (5) also says "As HPCF pump motors has very large capacity, they are connected to Div. II, III to equalize the DG load capacity." What is the intent of this note? If the HPCF pumps are 100% redundant pumps, wouldn't you want to connect their motors to different divisions anyway to preserve their redundancy?

(7) Note (6) states that the CUW pump may operate under LOPP condition, but not operate with SLC pump operation. On this calculation, it states, CUW pump is not considered because SLC pump is included. Because the CUW pump operating load is greater than the SLC pump operating load, the CUW pump load should be used instead of the SLC pump load during LOPP, in order to provide the worst case loading on the diesel generator. Please justify or change the table accordingly.

(8) Note (7) states that the TCW/TSW pumps are connected to non-div. switchgears. Although these pumps are listed in tables 8.3-1 and 8.3-2, no loading on the diesels are identified for these pumps. If these pumps cannot be connected to the diesel generators why are they shown in tables 8.3-1 and 8.3-2? If they can be connected to the diesels, then a load should be identified for them on the diesels during the LOPP condition. This will provide worst case loading on the diesels during a LOPP.

(9) Note (9) states that the remainder of plant equipment are connected to div. I and, if A and B motors are provided, they are connected to div. I and II respectively. According to this note loads should only be shown on D/Gs “A” and “B” in the category (“Other Loads”) that the note refers to. There is, however, a load of 210 kW shown on D/G “C” under this category. Please clarify this apparent discrepancy.

(10) Note (10) says, “Only part of HNCW (HVAC normal cooling water system) will be considered under LOCA case.” This note, however, is provided in the LOPP table (Table 8.3-2). A note (note (3)) is provided in the LOCA table (Table 8.3-1) for this equipment which states, “Loads are shed with LOCA signal.” It appears then that note (10) should read, “Only part of HNCW (HVAC normal cooling water system) will be considered under LOPP case.” Please clarify whether this is the case. If the foregoing is the case, a load for the HNCW equipment should be shown on the diesels for the LOPP condition (Table 8.3-2). Presently, a load on the diesel generators during LOPP is not identified for this equipment.

Response 435.46

(1) A translation of the acronyms used in Tables 8.3-1 and 8.3-2 is provided in Table 8.3-3.

(2) Errors in Tables 8.3-1 and 8.3-2 have been corrected as requested.

(3) Loads on the diesel engine are larger than their rated value to account for the loss through the diesel generator and through the loads. The starting point of the calculation is the brake horse power required for the pump. The generator output requirement is then calculated from the motor output, motor efficiency (approximately 0.9 to 0.95 depending on motor capacity). The output of the diesel engine is then calculated based on a generator efficiency of 0.95.

(4) LOPP and LOCA loads listed as “Other Loads” are designations of spare capacity which may be identified in the unique plant application phase of the design.

(5) The load formerly identified as “NPSS CVCF” is now designated “VITAL CVCF” and has been corrected to read 20 kW for both the LOCA and LOPP loads.

(6) Note (5) was incorrect and is not used.

(7) Note (6) has been deleted and the CUW pumps have been deleted from the load lists. These loads are treated as plant investment protection, and are connected to non-Class 1E buses which are backed by the combustion turbine general.

(8) Note (7) has been deleted and the TCW and TSW pumps have been deleted from the LOCA and LOPP load lists. These loads are treated as plant investment protection. The CRD pumps have also been deleted from the LOCA and LOPP load lists, and placed on two non-Class 1E buses. However, these buses are respectively backed up with the combustion turbine generator and the alternate preferred power supply.

(9) Note (9) is not used.

(10) Note (10) is not used.

Question 435.47

The following questions pertain to Figure 8.3-1 “Power Distribution Single Line Diagram”:

(1) The division II 6.9 kV bus is shown broken into two separate buses. This is apparently an error. Please correct.

(2) The circuit between the Division III 6.9 kV bus and the 480V switchgear P/C 6E-1 does not show an intervening transformer. Please correct.

(3) Identify the ratings of the diesel generators and 6900/480V transformers on this drawing.

(4) Discuss the circuit from the Division I, II, and III 480V switchgear to the turbine island labeled as “To 480V Switchgear (Alternate Preferred Power).” If this is a power feed to loads in the turbine island identify the loads it feeds, the circumstances under which the loads are fed, and describe the 1E/non-1E isolation provided. If this is a power feed from the turbine island identify the source of power and the need for a second source of power to the 480V Class 1E bus. In either case identify the interface requirements for this circuit.

(5) On every bus shown in Figure 8.3-1 there is one circuit shown connected to ground through a circuit breaker. Describe the function of this circuit. If the circuit is used to provide a safety ground on the bus during maintenance operations describe the interlocks, controls, and alarms provided to assure it is not inadvertently energized during non-maintenance operations.

(6) Note 2 on this drawing says, "See 480V MCC one-line diagram for details." There is, however, no "480V MCC one-line diagram" provided in the SSAR. Please provide us this diagram and include it in the ABWR SSAR.

(7) The arrangement of the normal preferred and alternate preferred power sources to the 6.9kV buses does not agree with that shown on Figure 8.3-2. Please correct this discrepancy.

Response 435.47

(1) The Power Distribution Single Line Diagram, Figure 8.3-1, has been corrected to show the Division II, 6.9 kV bus as one bus.

(2) Figure 8.3-1 has been corrected to show intervening transformers between the Division III, 6.9 kV bus and the 480 VAC switchgear.

(3) The rating of the diesel generators and the 6900/480 V transformers are shown on the revised Figure 8.3-1.

(4) The circuit from the Divisions I, II and III 480 VAC switchgear to the turbine island labeled as "To 480 V Switchgear (Alternate Preferred Power)" has been deleted in Figure 8.3-1.

(5) The bus grounding devices are used to provide a safety ground on buses during maintenance operations. Interlocks for the bus grounding devices are as follows:

   (a) Undervoltage relays must be actuated.

   (b) Related breakers must be in the disconnect position.

   (c) Voltage for bus instrumentation available.

(6) The problem regarding Note 2 on Figure 8.3-1 has been corrected.

(7) The discrepancy between normal preferred and alternate preferred power sources to the 6.9 kV buses has been corrected on revised Figure 8.3-1. Question 435.48

Question 435.8

The offsite power circuits to the 6.9 kV Class 1E buses shown in Figure 8.3-2 "6.9kV System Single Line" should be appropriately labeled as "Normal Preferred Power" or "Alternate Preferred Power."

Also, the way the offsite circuits are arranged on this drawing makes it appear that they are connected to the same 6.9 kV High Voltage Switchgear as the RIPS. The offsite circuits to the Class 1E buses should be directly connected to a winding of the Offsite Power Transformers that is separate from that which feeds the non-Class 1E loads. The Offsite Power Transformers, however, should have the capability of feeding both Class 1E and non-Class 1E loads so the plant does not have to rely on only Class 1E loads when only one offsite power source is lost.

Also, the offsite power supply circuits to the Class 1E buses should be arranged so that all three Class 1E divisions are not simultaneously deenergized on the loss of only one of the offsite power supplies. These should be included as interface requirements. Please verify that this is the case.

Response 435.48

The single line diagram, Figure 8.3-1, has been revised to incorporate a low voltage generator breaker. The main power circuit to the switchyard is now the “Normal Preferred Power”. The “Alternate Preferred Power” is via the reserve auxiliary transformer and has been clearly marked on the single line.

If the main power connection to the grid is lost, the unit is shut down and power generation equipment is not needed. Investment protection loads remaining on buses A1 and B1 can be respectively assumed by the combustion turbine generator and the reserve auxiliary transformer. Investment protection requirements are met by the services on only one of these two buses.

Class 1E and non-Class 1E loads do not share normal auxiliary transformers. However, one of the windings of the reserve auxiliary transformer, which feeds the 6.9 kV Division III bus, can also be connected to provide an alternate power source to one of the non-Class 1E buses. This option provides the back-up power for the non-Class 1E investment protection loads as described in the previous paragraph. The shared winding does not significantly jeopardize the availability of the Division III bus, since it can also be fed from either the diesel generator or the combustion turbine generator if the normal preferred power and the connection to the alternate preferred power are lost.

As shown on the single line diagram, Divisions I & III buses each have three available sources of feeder power. Division II has the same sources with an additional feeder path from the normal preferred power. The design of the bus feeds and their controls is such that an operator may select any or all divisions to be fed from the same offsite power source. Only operating procedures would prevent him from doing this. It is therefore an interface requirement that operating procedures shall require one of the three divisional buses be fed by the alternate power source during normal operation; in order to prevent simultaneous deenergization of all divisional buses on the loss of only one of the offsite power supplies.(See Subsection 8.3.4.9)

Question 435.49

With regard to Figure 8.3-3 "480V System Single Line":

(1) Identify the feeds to 480V switchgear P/C 6A-1, P/C 6A-2, P/C 6B-1, and P/C 6B-2. Describe the purpose and function of these switchgear and the R/B MCCs they feed. Identify the type of loads they feed.

(2) Identify the location, purpose and function of P/C 6SB-1. Identify the type of loads it feeds. Why does it have feeds from all three divisions of 480V switchgear? Identify the isolation devices used, and provide a connection diagram of the three divisional feeds to P/C 6SB-1. If P/C 6SB-1 is outside the nuclear island provide its interface requirements.

(3) If the T/B MCCs are non-Class 1E identify the isolation devices used and the interface requirements.

Response 435.49

(1) The feeds for 480V switchgear P/C 6A-1, P/C 6A-2, P/C 6B-1, and P/C 6B-2 are shown on revised Figure 8.3-1. These are the non-class 1E 480V switchgear for the plant. They feed all of the 480V non-safety loads except those few non-Class 1E loads which are fed from Class 1E buses as indicated in revised Figure 8.3-3.

(2) P/C 6SB-1 (P/C SB-1) provides power to motor control centers which are primarily used for maintenance outages. The cross ties to the safety-related buses were for maintenance outages also. The cross ties have been removed.

(3) The motor control centers are spotted in the listed buildings to be accessible during maintenance outages. The motor control centers are non-Class 1E and are fed from non-Class 1E power centers.

Question 435.50

The non-safety related instrument power system shown in Figure 8.3-4 has two redundant Class 1E power feeds to it. Identify the isolation devices used between the Class 1E and non-Class 1E systems. A Class 1E circuit breaker tripped on a LOCA signal or two redundant Class 1E circuit breakers coordinated with the upstream MCC feeder breaker are acceptable isolation devices.

Response 435.50

The non-safety related instrument power supplies are fed from the non-Class 1E extensions of the Class 1E 480 V buses. See the revised Subsection 8.3.1.1.2.1 (see response to Question 435.9) for a description of the isolation between the Class 1E buses and the non-Class 1E extension buses.

Question 435.51
On Figures 8.3-5, 8.3-6, 8.3-7, and 8.3-8 describe the function and operation of the various devices that are identified by device numbers. Also, on Figures 8.3-7 and 8.3-8 define the acronym SID located next to the diode device. Describe the function and operation of this device.

Response 435.51
Figures 8.3-5, -6, -7 and -8 have been revised. However, the meaning to the numeric codes on the new figures are as follows:

- 27—AC undervoltage relay.Operates when AC voltage drops below predefined minimum value.
- 64—Ground overcurrent relay. Uses voltage to detect grounded circuit.
- 76—DC overcurrent relay.
- 80—DC undervoltage relay.
- 84—Voltage relay. Operates at a specified voltage for DC or AC circuits.

"SID" is the acronym for silicone diode. However, these diodes were removed in a design change subsequent to the question.

Question 435.52
On Figure 8.3-7 "125 VDC Power System" describe the function and operation of the various key interlocks shown on the figure.

Response 435.52
The key interlocks on the output of the standby chargers insure that a standby charger is only connected to one load at a time. The key interlocks on the inputs of the standby chargers insure that the standby charger is connected to only one input feed at a time.

The key interlocks on the output of the normal chargers prevent the normal charger and the standby charger from being simultaneously connected to the load.

Question 435.53
On Figure 8.3-8 "250 VDC Power System" describe the type of isolation provided between the Class 1E divisional power feeds and the non-Class 1E DC Power System. Also describe the type of isolation and separation provided between the power feed from P/C 6E-1 (Division III) and the power feed the P/C 6C-1 (Division I).

Response 435.53
See Response 453.40.

Question 435.54

With regard to the classification of structures, components, and systems in Table 3.2-1; item R1 "DC Power Supply - Nuclear Island" and item R2 "Auxiliary AC Power System" are very general in their present form. We have therefore determined that Table 3.2-1, items R1 and R2, should be expanded to include the following list of items. Please incorporate these items into Table 3.2-1 adding any additional items necessary to make it a complete list.

R1 DC Power Supply - Nuclear Island

- 125 volt batteries, battery racks, battery chargers, and distribution equipment
- Control and power cables (including underground cable system, cable splices, connectors and terminal blocks)
- Conduit and cable trays and their supports
- Protective relays and control panels
- Containment electrical penetration assemblies
- Motors

R2 Auxiliary AC Power System

- 6900 volt switchgear
- 480 volt load centers
- 480 volt motor control centers
- 120 VAC safety related distribution equipment including inverters
- Control and power cables (including underground cable systems, cable splices, connectors and terminal blocks)
- Conduit and cable trays and their supports*
- Containment electrical penetration assemblies
- Transformers
- Motors

* Raceway installations containing Class 1E cables and other raceway installations required to meet seismic Category 1 requirements (those whose failure during a seismic event may result in damage to any Class 1E or other safety related system or components).

- Load Sequencers
- Protective relays and control panels
- Valve Operators

Response 435.54

Table 3.2-1 has been restructured to be more consistent with the ABWR systems structure document. The electrical sections now encompass R1 through R17, which incorporate all of the requested expansions, plus many additional items.

Question 435.55

Section 8.3.1.1.8.9 states that the qualification tests are performed on the diesel generator per IEEE-387 as modified by Regulatory Guide 1.9 requirements. If the qualification tests have been performed please provide us the results of the tests. If the tests have not yet been performed please indicate at what point the tests will be conducted.

Response 435.55

The qualification tests for diesel generators have not been done. The schedule for their performance will not be known until a plant has been ordered and the purchase orders for the diesel generators placed. Such information is beyond the scope of the Licensing Review Bases (LRB) document, but shall be supplied by the applicant as an interface requirement. (See Subsection 8.3.4.10)

Question 435.56

There have recently been a number of problems identified with the electrical systems at nuclear power plants. Although a number of these arose as a result of modifications done on the electrical systems after the plants were licensed, some were or could have been the result of poor original design.

(1) Generic Letter 88-15 addresses a number of electrical system problems that have occurred primarily as a result of inadequate control over the design process. Some of these inadequacies have occurred in areas of electrical system design which have historically well established principles such as circuit breaker coordination and fault current interruption capability. As a result the staff has not normally undertaken a detailed review of these areas, relying instead on the designers exercise of these well established principles. It is important that these areas have comprehensive, detailed design criteria and guidelines established for the design engineer. Controls should exist to ensure that these criteria are followed during the design process. Please address the specific problems discussed in GL 88-15 identifying the criteria and guidelines used to ensure that these inadequacies will not be found in the ABWR design. Provide a general discussion of the controls that exist over the design process in the electrical system area of the ABWR design.

(2) NRC Information Notice No. 88-75 identifies a problem where the anti-pump circuitry on circuit breakers can, under certain circumstances, result in loss of manual or automatic control of the circuit breaker. Subsequent to this, engineering personnel at Zion identified a problem between the closing logic and anti-pump circuits of certain circuit breakers that would prevent the closing of these circuit breakers following a loss of offsite power. Please review the automatic and manual closing and tripping logic of the ABWR circuit breakers to determine if there are any conditions that could result in loss of manual or automatic control through interaction with the breaker anti-pump circuits. Provide us the results of your review.

(3) NRC Bulletin No. 88-10 and NRC Information Notice No. 88-46 identifies a problem with defective refurbished circuit breakers. Although the primary concern is with circuit breakers used in safety-related circuits, there is also a concern with non-safety-related breakers used for electrical penetration protection, since these also provide a safety-related function but undergo less scrutiny. Please identify how you ensure that non-Class 1E breakers purchased for use in containment electrical penetration circuits are high quality, new circuit breakers from the circuit breaker manufacturer, rather than refurbished circuit breakers.

Response 435.56

(1) The Generic Letter (GL) 88-15 discusses problems due to the lack of full compliance with, and implementation of, General Design Criterion (GDC) 17 on the original design and/or changes to the original design at a later date. The ABWR electrical power systems design complies with GDC 17 as specified in Subsection 3.1.2.2.8.

(2) NRC Information Notice number 88-75 discusses the problem of disabling of diesel generator output circuit breaker by anti-pump circuitry.

(a) The review of the automatic and manual closing and tripping logic of the ABWR circuit breaker reveals that there are no conditions that could result in loss of manual or automatic control through interaction with the breaker anti-pump circuit.

(b) The ABWR circuit breaker logic is designed such that all potentially sealed-in close circuits for the circuit breakers are broken by spring-return control switches, time delay drop-out circuits, or control interlocks. Removal of the close signal will drop out the anti-pump seal-in circuit which provides the condition for the breaker to respond to the next close signal.

(3) The NRC Information Notice number 88-46 discusses problems with defective refurbished circuit breakers. To ensure that refurbished circuit breakers shall not be used in safety related or non-safety related circuitry of the ABWR plant design, it is an interface requirement that new breakers be specified in the purchase specifications (See Subsection 8.2.3(10)).

Question 435.57

With respect to the application of single failure criterion to manually-controlled, electrically-operated valves, list all valves for which SRP Branch Technical Position ICSB 18 (PSB) may apply. Describe (1) how power is locked out to active and passive valves, (2) how power can be reinstated from the control room if valve repositioning (active valves) is required later, and (3) how the valve position indication meets the single failure criterion.

Response 435.57

There are no valves in the ABWR plant design which are required to meet the provisions of SRP Branch Technical Position ICSB 18 (PSB).

Valve operations have been evaluated in the design. If inadvertent open operation has unacceptable safety consequences, two valves are placed in series on the pipe with logic segregation such that no single electrical failure can open both valves. Likewise, if inadvertent close operation has unacceptable safety consequences, two valves are placed in parallel on the pipe with logic segregation such that no single electric failure can close both valves. The power disconnect option is therefore unnecessary and is not used.

Question 435.58

Experience with nuclear power plant Class 1E electrical system equipment protective relay applications has established that relay trip setpoint drifts with conventional type relays have resulted in premature trips of redundant safety related system pump motors when the safety system was required to be operative. While the basic need for proper protection for feeders/equipment agains perminent faults is recognized, it is the staff's position that total non-availability of redundant safety systems due to spurious trips in protective relays is not acceptable.

Provide a description of your circuit protection criteria for safety systems/equipment to avoid incorrect initial setpoint selection and the above cited protective relay trip setpoint drift problems.

Response 435.58

The ABWR design is such that there are no single failures of electrical protective devices which could cause loss of function of redundent systems. This will minimize the probability of simultaneous trips.

User devices such as motors will be purchased with sufficient overload margins for set points of protective devices to be set sufficiently above the operating point to allow for setpoint drift.

Question 435.59

Explicitly identify all non-Class 1E electrical loads which are or may be powered from the Class 1E AC and DC systems. For each load identified provide the horsepower or kilowatt rating for that load and identify the corresponding bus number and division from which the load is powered.

Also identify the type of isolation device used between the non-Class 1E load and Class 1E power supply.

Response 435.59

Please refer to Response 435.34. This explains the extensive changes in the ABWR design since the inception of this question. The FMCRD bus connections are shown on Sheet 3 of Figure 8.3-1. Each of the twelve FMCRD Power Distribution Panels shown applies a load of approximately 70 kVA.

Question 435.60

Section 8.3.1.2.1 states compliance with the recommendations of R.G. 1.106 “Thermal Overload Protection for Electric Motors on Motor-Operated Valves”. Describe the means used to bypass the thermal overload protection to Class 1E MOVs during accident conditions. Describe what type of indication for the bypass or lack of bypass is provided in the control room. Provide a schematic of the design or give MOV drawing references as specific examples of the design.

Response 435.60

Safety functions which are required to go to completion for safety have their thermal overload protection devices in force during normal plant operation but the overloads are bypassed under accident conditions per Position 1.(b) of Regulatory Guide 1.106. The overload bypasses meet the requirements of IEEE-603, and are capable of being periodically tested [see 8.3.1.2(2)(g) and 8.3.2.2.2(2)(f)].

A visual indication is provided in the MCR when a MOV is in test. A list of RCIC equipment with thermal overload bypasses is provided as table 20.3.8-1. Circuit details at the elementary drawing level are beyond the scope of the Licensing Review Bases (LRB) document.

Question 435.61

Experience with nuclear power plant Class 1E motor-operated valve motors has shown that in some instances the motor winding on the valve operator could fail when the valve is subjected to frequent cycling. This is primarily due to the limited duty cycle of the motor.

Provide the required duty cycle of the ECCS and RCIC steam and water line motor operated valves as they relate to their respective system modes of operation during various events. Demonstrate that the availability of the safety systems in the ABWR design will not be compromised due to the limited duty cycle of the valve operator motors.

Response 435.61

The ECCS and RCIC motor operated valves are not subjected to constant cycling during their various modes of operation. They are either driven full open or full closed and left in position until the system operating mode is changed. Throttle valves are not expected to be subjected to constant cycling because they are manually set for descrete positions by the control room operator and left until a position change is required. Design life requirements are provided in the ECCS specifications and equipment will be procurred to meet those requirements. Duty cycle information is derived from the system behavior during the events listed in Table 3.9-1 and are documented in the design specification as desribed in Subsection 3.9.1.1.

Question 435.62

Provide the minimum required starting voltages for Class 1E motors. Compare these minimum required voltages to the voltages that will be supplied at the motor terminals during the starting transient when operating on offsite power and when operating on the diesel generators.

Response 435.62

See 8.3.1.1.5(1) and 8.3.4.12.

Table 20.3.8-1 List of RCIC Equipment with Thermal Overload Relay Bypass (Response to Question 435.60)

Valve No.	Name	Power Supply
E51-F001	CST Suction Valve	Div 1 DC
E51-F004	Injection Valve	Div 1 DC
E51-F006	S/P Suction Valve	Div 1 DC
E51-F008	Test Return Valve	Div 1 DC
E51-F009	Test Return Valve	Div 1 DC
E51-F011	Minimum Flow Valve	Div 1 DC
E51-F012	Cooling Water Supply Valve	Div 1 DC
E51-F035	Steam Supply Inboard Isol Valve	Div 1AC
E51-F036	Steam Supply Outboard Isol Valve	Div 2 DC
E51-F037	Steam Supply Valve	Div 1 DC
E51-F039	Turbine Exhaust Valve	Div 1 DC
E51-F045	Steam Supply Bypass Valve	Div 1 DC
E51-F047	Vacuum Pump Disch Isol Valve	Div 1 DC
E51-F048	Steam Line Warm-Up Valve	Div 1 DC
*	Turbine Trip and Throttle Valve	Div 1 DC
*	Condensate Pump	Div 1 DC
*	Vacuum Pump	Div 1 DC

* Supplied with RCIC Turbine, E51-C002

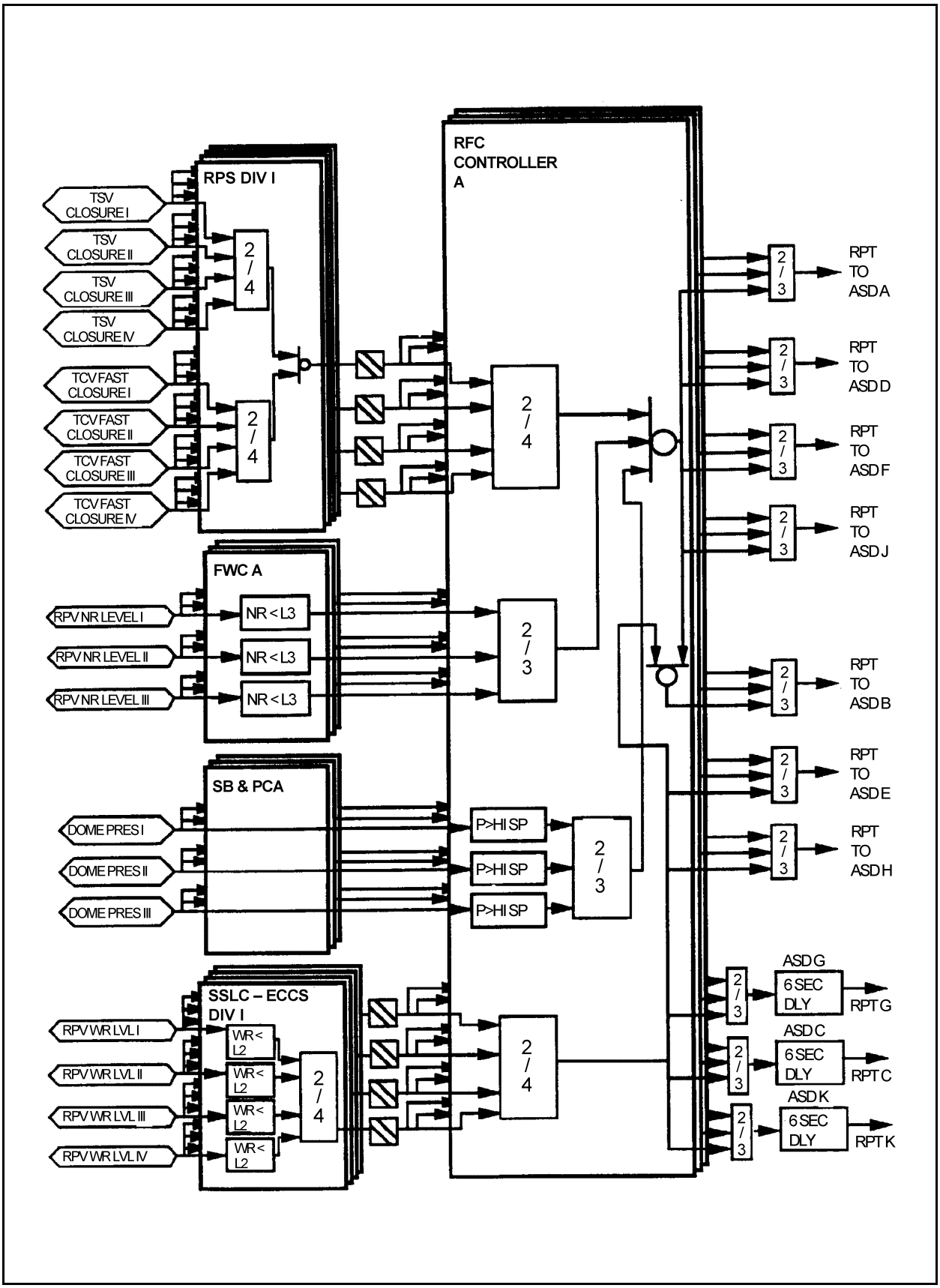

Figure 20.3.8-1 ABWR RPT Logic (Response to Question 420.106)

20.3.9 Response to Ninth RAI — Reference 9

Question 725.1

In most of the currently available BWR PRAs, the loss of offsite power sequence with successful recovery of offsite power within 30 minutes (i.e., TM sequence in Fig. 19D.4-4) is transferred to the MSIV closure (i.e., isolation events) event tree. Please provide the basis for transferring it to the reactor shutdown tree (i.e., Fig. 19D.4-1) instead.

Response 725.1

Response to this Chapter 19 question not part of DCD (See SSAR Subsection 20.3.9).

Question 725.2

Should not the event tree top event, Q (Feedwater), appearing in the reactor shutdown event tree (Fig. 19D.4-1) be replaced by "Feedwater and PCS"? Otherwise, a branch should be added to the uppermost sequence (with an end state of OK) to determine the success or failure of the top event, W. Note that condenser problems (hardware or others) can lead to a manual shutdown.

Response 725.2

Response to this Chapter 19 question not part of DCD (See SSAR Subsection 20.3.9).

Question 725.3

Please provide the basis of not crediting automatic depressurization for the safety function, X, in the reactor shutdown event tree (Fig. 19D.4-1).

Response 725.3

Response to this Chapter 19 question not part of DCD (See SSAR Subsection 20.3.9).

Question 725.4

Does ABWR have a design feature which allows the reactor operator to utilize RCIC in steam condensing mode to transfer reactor decay heat to the ultimate heat sink? If yes, why is no credit given to such a feature in evaluating the safety function W (containment heat removal)?

Response 725.4

Response to this Chapter 19 question not part of DCD (See SSAR Subsection 20.3.9).

Question 725.5

In essentially all of the event trees shown in Fig. 19D.4-1 through Fig. 19D.4-14, failure of the W function (long term heat removal) is assigned a probability of failing to run RHRA or RHRB or RHRC rather than failing to start and run RHRA or RHRB or RHRC, if the preceding V function (RHR injection or condenser) is a success. This would be correct if one of the RHR pumps was successfully started and run to accomplish the mission of the V function, and then switched to a long term heat removal mode. Notice, however that the success of the V function can also be achieved, as indicated in Table 19.3-2, by using one condenser pump and one condenser transfer pump. In such a case, the approach taken in the ABWR FSR will underestimate the failure probability of W since the RHR pump has to be started and then run

throughout the mission time. Also, can one RHR pump alone always accomplish the missions of both the V and the W functions for all the transients including a large LOCA?

Response 725.5
Response to this Chapter 19 question not part of DCD (See SSAR Subsection 20.3.9).

Question 725.6
In both the non-isolation event tree (Fig. 19D.4-2) and the isolation/loss of feedwater event tree (Fig. 19D.4-3), the uppermost sequence (with an end state of OK) should branch out at the top event, W, since success of Q (feedwater alone) does not automatically warrant the success of W. The same comment also applies to the IORV event tree (Fig. 19D.4-11).

Response 725.6
Response to this Chapter 19 question not part of DCD (See SSAR Subsection 20.3.9).

Question 725.7
In Table 19D.4-1 through Table 19D.4-17, the branch point value of the safety function V (LPFLA or LPFLB or LPFLC available) was assigned a value of 1.27E-03, with the source of the data given as Table 19D.4-1. No such data, however, can be found in Table 19D.4-1. Also, for the loss of offsite power event trees, failure of V (LPFLA or LPFLB or LPFLC or one condensate and one condensate transfer pump) is given a value of 7.37E-03. Again, no such data can be found in the tables. Please explain how this value was calculated.

Response 725.7
Response to this Chapter 19 question not part of DCD (See SSAR Subsection 20.3.9).

Question 725.8
For isolation/loss of feedwater events, successful RHR operation using the PCS requires reopening of the MSIVs and the recovery of feedwater if it is initially lost. In Fig. 19D.4-3, which event tree top event takes into consideration the reopening of MSIVs? Also, will the chance of reopening the MSIVs be smaller if there are stuck open SRVs?

Response 725.8
Response to this Chapter 19 question not part of DCD (See SSAR Subsection 20.3.9).

Question 725.9
In the loss of offsite power and station blackout event tree (Fig. 19D.4-4), the probability of failing all three diesel generators (7.99E-04) is used to sort out station blackout sequences (i.e., BE2, BE8, and BE0) from the loss of offsite power sequences (i.e., TE2, TE8, and TE0). Note, however, that “all DG not fail” could mean: (1) one DG is available, (2) two DGs are available, or (3) all three DGs are available. In Figs. 19D.4-5 and 19D.4-6, the unavailability of U_h (HPCF B or C with a probability of 1.58E-02) was computed based on the assumption that two diesel generators are available. If only one DG is available at the onset of loss of offsite power, this

unavailability could become larger. It appears that some kind of weight-averaging should be applied to modify this value based on the probabilities of having either one or two DGs when the loss of offsite power occurs. Also, in Fig. 19D.4-4, the failure probability of opening SRVs following an ATWS event was taken to be 1.0E-06. For ATWS events, a large number (15) of SRVs need to be opened for pressure relief, and hence, the failure probability of opening the required number of SRVs can be expected to be larger.

Response 725.9

Response to this Chapter 19 question not part of DCD (See SSAR Subsection 20.3.9).

Question 725.10

In all of the loss of offsite power event trees (Figs. 19D.4-5, 4-6, and 4-7), the failure probability of HPCF (U_h) is taken to be the same irrespective of the offsite power recovery time and regardless of whether there are stuck-open SRVs. Can the heating up of suppression pool for a prolonged period of time due to stuck-open SRVs adversely affect the availability of HPCF?

Response 725.10

Response to this Chapter 19 question not part of DCD (See SSAR Subsection 20.3.9).

Question 725.11

Please provide the basis of not considering stuck-open SRVs in the station blackout event tree (BE2, Fig. 19D.4-8).

Response 725.11

Response to this Chapter 19 question not part of DCD (See SSAR Subsection 20.3.9).

Question 725.12

In the same event tree cited above (Question 725.11), the failure probability of W (RHRA or RHRB or RHRC) is taken to be 5.19E-04, which does not correspond to that (1.59E-03) shown in Table 19D.4-1 for the case of loss of offsite power. Are the values shown in the column under the heading of "Loss of Offsite Power" in Table 19D.4-1 also applicable to station blackout? If not, please explain.

Response 725.12

Response to this Chapter 19 question not part of DCD (See SSAR Subsection 20.3.9).

Question 725.13

In the station blackout event tree (BE8, Fig. 19D.4-9), why does the sequence with success of RCIC need to be branched out for testing the success of HPCF? According to the success criteria listed in Table 19.3-2, successful core cooling using a high pressure system can be achieved by using either RCIC or one train of HPCF for all transients including loss of offsite power. Furthermore, both HPCF and LPFL require AC power which, in this case, is not available for nearly eight hours. Please explain why both HPCF and LPFL are included as event tree top events.

Response 725.13
Response to this Chapter 19 question not part of DCD (See SSAR Subsection 20.3.9).

Question 725.14
For IORV transients, there is no immediate automatic scram signal, and the operator may be required to manually scram the reactor and start the makeup system before the suppression pool temperature exceeds the heat capacity temperature limit. Please provide the basis of not including "timely manual scram" as an event tree top event in the IORV event tree (Fig. 19D.4-11).

Response 725.14
Response to this Chapter 19 question not part of DCD (See SSAR Subsection 20.3.9).

Question 725.15
Please explain why feedwater (Q) was not credited as a viable means of core cooling in the small LOCA event tree (Fig. 19D.4-12). Note that, according to the success criteria shown in Table 19.3-2, feedwater can be used to successfully cool the core in the event of a small steam LOCA.

Response 725.15
Response to this Chapter 19 question not part of DCD (See SSAR Subsection 20.3.9).

Question 725.16
Please explain why HPCF is given credit in the large LOCA event tree (Fig. 19D.4-14) despite the high degree of depressurization caused by the large LOCA.

Response 725.16
Response to this Chapter 19 question not part of DCD (See SSAR Subsection 20.3.9).

Question 725.17
Please provide justification of not considering vapor suppression in the large LOCA event tree.

Response 725.17
Response to this Chapter 19 question not part of DCD (See SSAR Subsection 20.3.9).

Question 725.18
In constructing the ATWS event tree (Fig. 19D.4-15), no distinction was made between ATWS events with MSIV closure (isolation) and those with bypass available (non-isolation), although the former is generally more severe and limiting. Please explain why the same branch point probabilities were used in quantifying the ATWS sequence frequencies despite differences in the success criteria, such as the time available for the operator to inhibit ADS or the unavailability of normal heat removal system for containment heat removal (see Table 19.3-3).

Response 725.18
Response to this Chapter 19 question not part of DCD (See SSAR Subsection 20.3.9).

Question 725.19

It appears that the low core damage frequency (9.1E-09/RY) found for ATWS sequences is mainly driven by the low initiating event frequency (9.34E-09/RY), which was obtained by taking scram failure probability, C, to be 1.0E-08. Please explain in detail how this scram failure probability was calculated. From the fault tree developed for a single control rod drive (Fig. 19D.6-17a, Figure 1), the probability of failure to insert an individual control rod can be estimated to be roughly 3.0E-06. No explanation, however is given as to how this probability is used to generate the probabilities of the basic events shown in the fault tree of control rod drive system (Fig. 19D.6-19a, Figure 1). Also, no probability data is given for the event RPS (RPS fails to initiate scram) appearing in the fault trees for reactivity control (Fig. 19D.6-16b).

Response 725.19

Response to this Chapter 19 question not part of DCD (See SSAR Subsection 20.3.9).

Question 725.20

In Table 19.3-3, the time available for the operator to initiate one train of SLC is given to be 10 minutes for both isolation and non-isolation ATWS events. Should not the time available for the former be shorter because the suppression pool is heated up sooner?

Response 725.20

Response to this Chapter 19 question not part of DCD (See SSAR Subsection 20.3.9).

Question 725.21

For an ATWS event which is initiated or accompanied by closure of all MSIVs or loss of condenser, can adequate core coolant inventory be maintained by RCIC alone (as indicated in Table 19.3-3)? For some BWRs of current design, such an event requires HPCI or a combination of HPCI and RCIC.

Response 725.21

Response to this Chapter 19 question not part of DCD (See SSAR Subsection 20.3.9).

Question 725.22

In quantifying ATWS sequence frequencies, the same branch-point value was used for W (containment heat removal) regardless of whether there are stuck open SRVs. Was suppression pool heating due to stuck-open SRVs taken into account in estimating the failure probability of W?

Response 725.22

Response to this Chapter 19 question not part of DCD (See SSAR Subsection 20.3.9).

Question 725.23

Is there any reason why the event tree top event “ADS Inhibit” in the ATWS event tree is placed before “Feedwater or HPCF” and “RCIC” although it appears more logically correct to place it after the latter top events?

Response 725.23
Response to this Chapter 19 question not part of DCD (See SSAR Subsection 20.3.9).

Question 725.24
Was any functional event tree or fault tree developed to analyze the unavailability of feedwater, condensate, and condenser system? How was the unavailability of feedwater (Q), for example, evaluated for different transient initiators?

Response 725.24
Response to this Chapter 19 question not part of DCD (See SSAR Subsection 20.3.9).

Question 725.25
In the event tree quantifications, the frequency of a particular accident sequence was obtained by multiplying together the initiating event frequency and the branch point probabilities of the failed safety functions, such as U, V, or W, appearing in the sequence description. This approach is proper if the branch point probabilities were evaluated by properly accounting for the common-mode failures among the event tree top events by linking together the relevant fault trees. Were these fault tree linkings done in the ABWR analyses to obtain the upper-bound of minimal cut sets for safety function failures such as UV, QUV, or UVW? If not, please explain how the branch-point probabilities were calculated for the individual safety functions such as U, V, or W.

Response 725.25
Response to this Chapter 19 question not part of DCD (See SSAR Subsection 20.3.9).

Question 725.26
Were all the system failure probabilities (except for RCIC) listed in Table 19D.4-1 obtained by quantifying the fault trees shown in Section 19D.6? Were the probabilities of failing all ECCS systems computed by linking the high pressure and low pressure system fault trees? If so, which mode of the low pressure system was used? Also, were these values actually used in the event tree quantifications?

Response 725.26
Response to this Chapter 19 question not part of DCD (See SSAR Subsection 20.3.9).

Question 725.27
Were the fault trees for the support systems, such as electric power system, service water system and instrumentation system individually quantified? Are the results of such fault tree quantifications (in terms of minimal cut sets) available for comparison with BNL calculations?

Response 725.27
Response to this Chapter 19 question not part of DCD (See SSAR Subsection 20.3.9).

Question 725.28
What modifications to the fault tree input data were made to obtain the system failure probabilities corresponding to loss of offsite power (last column of Table 19D.4-1)? Was the failure probability of switchgear taken into consideration when the failure probability of the W function (for example, in Figure 19D.4-7) was calculated?

Response 725.28
Response to this Chapter 19 question not part of DCD (See SSAR Subsection 20.3.9).

Question 725.29
Please briefly describe the possible impacts of omitting the development of system fault tree for plant air system on the frontline and the support systems.

Response 725.29
Response to this Chapter 19 question not part of DCD (See SSAR Subsection 20.3.9).

Question 725.30
It was noted that a very small fraction of the failure data shown in Table 19D.6-2 through 19D.6-7 are inconsistent with those shown in the relevant fault trees (for example, DIV2MUX, HMV14BHW, and HXV032CQ in Table 19D.6-2). Which values were actually used in the fault tree quantifications?

Response 725.30
Response to this Chapter 19 question not part of DCD (See SSAR Subsection 20.3.9).

Question 725.31
The break areas for the various LOCAs (large, medium, and small) are defined to be significantly larger than those used in, for example, the Limerick PRA. Do the initiating event frequencies used in the event tree quantification reflect these changes in the definition of break sizes?

Response 725.31
Response to this Chapter 19 question not part of DCD (See SSAR Subsection 20.3.9).

Question 725.32
How does the RWCU (reactor water cleanup) system work to remove decay heat? What suction lines are used? What is the heat sink? Does the non-generative heat exchanger have enough capacity to remove decay heat?

Response 725.32
Response to this Chapter 19 question not part of DCD (See SSAR Subsection 20.3.9).

Question 725.33
For RHR shutdown cooling mode, suction is taken from RPV. Where are the points of suction for the three suction lines? Also, where are the discharge points for the core cooling subsystem return lines?

Response 725.33
Response to this Chapter 19 question not part of DCD (See SSAR Subsection 20.3.9).

Question 725.34
Questions on Table 19D.4-1.

(1) What modifications were made to the fault trees to obtain the failure probabilities corresponding to large or medium LOCAs?

(2) Are the RCIC failure probabilities calculated by quantifying the revised fault trees in Amendment 8?

(3) What are the failure probabilities corresponding to station blackout?

Response 725.34
Response to this Chapter 19 question not part of DCD (See SSAR Subsection 20.3.9).

Question 725.35
What modifications were made to the fault trees to obtain the core damage frequency corresponding to incorporation of (a) gas turbine generator; and (b) fire system water connection?

Response 725.35
Response to this Chapter 19 question not part of DCD (See SSAR Subsection 20.3.9).

Question 725.36
Following loss of offsite power, feedwater pumps (motor driven) are tripped and MSIVs are likely to be closed. Are the FW pumps or the RWCU pumps connected to DG power source? Is re-opening of MSIVs considered in calculating the probability of NHR for the W function? In other PRAs, feedwater is considered unavailable following LOOP.

Response 725.36
Response to this Chapter 19 question not part of DCD (See SSAR Subsection 20.3.9).

Question 725.37
Class II sequence frequency was calculated to be 4.29E-06. The input to the Class II containment event tree, however, is 2.5E-06. Please explain the difference. Was the CDF for Class II sequences (4.29E-10) obtained by taking 0.01% of 4.29E-06?

Response 725.37
Response to this Chapter 19 question not part of DCD (See SSAR Subsection 20.3.9).

Question 725.38
ATWS transient scenarios vary significantly depending on whether MSIV are closed or whether offsite power is available. How can a single ATWS event tree properly handle all ATWS events of different initiators?

Response 725.38
Response to this Chapter 19 question not part of DCD (See SSAR Subsection 20.3.9).

Question 725.39
In the ATWS event tree, failure to initiate SLCS is given a probability of 0.2 (time available for the operator = 10 min.) A typical value used for this action in most other BWR PRAs is 0.87 (with time available for the operator = 8 min.). Please explain the difference.

Response 725.39
Response to this Chapter 19 question not part of DCD (See SSAR Subsection 20.3.9).

Question 725.40
In the ATWS event tree, the probability of failing to inhibit ADS is taken to be 0.1. A typical value used in other PRAs is 0.5 if high pressure core injection is a failure, and 0.005 if HPCI is a success. To be able to make such a distinction, the order of the event tree top events for "HPCI" and "failure to inhibit ADS" must be interchanged.

Response 725.40
Response to this Chapter 19 question not part of DCD (See SSAR Subsection 20.3.9).

Question 725.41
For loss of offsite power initiators, stuck open relief valves (SORVs) were considered in Amendment 4, but were eliminated in Amendment 8. Please explain why.

Response 725.41
Response to this Chapter 19 question not part of DCD (See SSAR Subsection 20.3.9).

Question 725.42
For isolation/loss of FW events, the unavailability of feedwater is taken to be 0.43 (= 40%(1) + 60%(0.05)). Is not the value 0.05 too optimistic for the MSIV closure initiators?

Response 725.42
Response to this Chapter 19 question not part of DCD (See SSAR Subsection 20.3.9).

Question 725.43
In order to expedite the staff's review, please provide a copy of the MAAP code and requisite input information that was used in the ABWR evaluation.

Response 725.43
Response to this Chapter 19 question not part of DCD (See SSAR Subsection 20.3.9).

Question 725.44
Please provide a copy of the magnetic medium containing all system level fault trees and functional level fault trees modeled for the initiating events applicable to the ABWR.

Response 725.44
Response to this Chapter 19 question not part of DCD (See SSAR Subsection 20.3.9).

Question 725.45
Please provide the input files for the MAAP calculations.

Response 725.45
Response to this Chapter 19 question not part of DCD (See SSAR Subsection 20.3.9).

Question 725.46
The probability of containment failure resulting from loss of heat removal is given as 3.4E-6 in Section 19.1.2. However, the frequency of containment structural failure resulting from loss of containment heat removal is given as 2.5E-7 per reactor year in Section 19D.5.12.4. Please clarify.

Response 725.46
Response to this Chapter 19 question not part of DCD (See SSAR Subsection 20.3.9).

Question 725.47
Is the failure pressure of the upper drywell (UDW) head above 500 F independent of the UDW temperature? If it is a function of temperature, please provide the function. Please also provide the leak area for the high temperature failure. Is high temperature failure considered to be P (penetration) or D (drywell head) failure in the release mode from containment when binning the accident sequences?

Response 725.47
Response to this Chapter 19 question not part of DCD (See SSAR Subsection 20.3.9).

Question 725.48
What are the locations and sizes of the passive flooders? Please describe the melting process of the passive flooder fuse including the temperature distribution in the fuse. What is the reliability of these flooders? Are there any examples of their use in other industries?

Response 725.48
Response to this Chapter 19 question not part of DCD (See SSAR Subsection 20.3.9).

Question 725.49
The CET for Class IV accidents was not developed because of negligibly low occurrence frequencies (Section 19D.5.11.1). However, CETs for accident classes with similar or lower frequencies (Classes IB-3 AND IIIA) were developed. Please explain.

Response 725.49
Response to this Chapter 19 question not part of DCD (See SSAR Subsection 20.3.9).

Question 725.50a
With respect to Firewater Addition (FA), is it necessary to have a separate "FA" category for a mitigating feature? It appears that "FA" is included in "IV" (e.g., Figures 19E.2-6 describe a sequence SBRC-FA-D0. However, this sequence is binned as SBRC-IV-D0 in CET IB-2, Figure 19D.5-8). The CETs do not show any sequences with "FA".

Response 725.50a
Response to this Chapter 19 question not part of DCD (See SSAR Subsection 20.3.9).

Question 725.50b
Withdrawn.

Question 725.50c
How is the firewater addition or spray handled in the CETs?. It appears that it is included sometimes in "ARV" (e.g., Seq. 3 of CET ID.2) and sometimes in "ARC" (e.g., Seq 6 of CET IA-1 (sic)). Would it not simplify and clarify the CETs if firewater is designated as a separate heading? Firewater spray appears to play a major role in reducing the release fractions by scrubbing in the case of containment failure. (A suppression pool loses its scrubbing function once the vessel fails). Therefore, it is important to know if firewater is available for a particular sequence.

Response 725.50c
Response to this Chapter 19 question not part of DCD (See SSAR Subsection 20.3.9).

Question 725.51
It is repeatedly stated that corium cools in the LDW after vessel failure by the water which was retained in the lower plenum in many of the accident descriptions. Why did this water not cool corium in the vessel before vessel failure? How much water is available in this manner? Would accidents progress differently if the water cooled the core in vessel?

Response 725.51
Response to this Chapter 19 question not part of DCD (See SSAR Subsection 20.3.9).

Question 725.52

Questions on Figures 19E.2-2 (Accident sequence LCLPPFDM)

(1) In Figure C, why does the upper drywell temperature continue to increase throughout the accident?

(2) In Figure E, why does the drywell water level change between the PF opening and the DW head failure?

(3) In Figure B, why does the drywell pressure decrease after water boils away? (The gas temperature does not show any corresponding drop during this period.)

Response 725.52

Response to this Chapter 19 question not part of DCD (See SSAR Subsection 20.3.9).

Question 725.53

Referring to Figures 19E.2-5 (Accident Sequence LCHPPFPH): Figure A shows a pressure drop at about 17 hours. This was explained in the text as being due to the flow of water from the suppression pool into the drywell (A similar phenomenon was shown in Figure 19E.2-11.). Please clarify. It appears that the DW pressure should be higher than the WW pressure during this period. This pressure drop appears to delay the DW head failure by about 10 hours. What impact will this have on the final release fraction?

Response 725.53

Response to this Chapter 19 question not part of DCD (See SSAR Subsection 20.3.9).

Question 725.54

The suppression pool bypass due to stuck open WW-DW vacuum breakers is of concern only for cases involving wetwell venting. Please explain the consequence ratio of 825 used in the equation on Page 19E.2-40. In the same equation, the fire water unavailability of 1.5% was assumed, which is considerably lower than 10% used elsewhere. Please explain.

Response 725.54

Response to this Chapter 19 question not part of DCD (See SSAR Subsection 20.3.9).

Question 725.55

The CET top event “ARC” (core melt arrest in containment) can occur if any of the following conditions exist, RHR is available, or RHR is recovered, or firewater is available, or PF operates.

Except for firewater, other features are already designated as top events of CETs (CHR, RCH, PF). Is it necessary to have “ARC” as a separate heading? It appears to be duplicative and confusing regarding how “ARC” occurred. (It is confusing since some of the top events are operation/availability of systems while some of them are events caused by operation of the same system.)

Response 725.55
Response to this Chapter 19 question not part of DCD (See SSAR Subsection 20.3.9).

Question 725.56
High temperature failure (HTF) occurs if corium is carried to the UDW and no spray is available. Does the probability 0.01 include the probability of both of these occurring? Wouldn't it be clearer if this heading is replace by "Corium in the UDW" and "Spray Available"? (See also Question 725.57a)

Response 725.56
Response to this Chapter 19 question not part of DCD (See SSAR Subsection 20.3.9).

Question 725.57
Questions on Class IA/IA.1 and IIIA/IIIA.1 CETs

(1) High temperature failure probability is identical whether RHR is available or not in these CETs. However, if RHR is available, the probability to have UDW spray appears to be higher and, therefore, the probability of high temperature failure smaller. (See the previous question.)

(2) Why isn't the probability for "ARC Yes" 1.0 when RHR is available (i.e., what does the probability of 1.E-5 represent in Sequence 4 of CET IA?)

(3) Sequence 3 of CET IA is binned as ..FSNN. Does this imply that core melt is arrested in the containment due to FW? Why not RHR?

(4) How is core melt arrested in the containment without RHR for Sequences 4 and 6? Is this due to FW?

(5) What is the basis for the containment failure probability at the time of vessel failure, 0.001, or high temperature failure probability, 0.01? What is the sensitivity of the final consequence to uncertainty in these numbers?

Response 725.57
Response to this Chapter 19 question not part of DCD (See SSAR Subsection 20.3.9).

Question 725.58
Questions on Class IB-1/IB-1.1 and IB-3/IB-3.1 CETs

(1) How is the core melt arrested in the containment for Sequences 2 and 4 of these CETs? Are these probability same for IB-1 and IB-3 because they are solely due to FW?

(2) Why isn't the RHR recovery probability 100% for Sequences 2 and 5 for IB-1?

(3) Why is probability of the RHR recovery failure significantly higher for Sequence 7 than for Sequence 4 in IB-1?

(4) Why is the probability of RHR recovery failure 5 times higher for Sequence 4 of IB-3 than Sequence 4 of IB-1, while they remain the same between Sequences 7 of IB-1 and IB3? (Incidentally, the "RCH No" branch probability for Sequence 7 of IB-3 appears to be misprinted. It should be 0.1, not 0.01.)

(5) Sequence 7 of IB-1 is binned as PFDH while Sequence 7 of IB1.1 as PSDN. This implies that the consequence of the low pressure vessel failure is more significant than that of high pressure. Please explain. (The same question for IB-3.)

Response 725.58

Response to this Chapter 19 question not part of DCD (See SSAR Subsection 20.3.9).

Question 725.59

Questions on Class IB-2 CET

(1) The core damage frequency for this class is not the same as that of Table 19.3-6. Please clarify which is correct.

(2) The probability of failure to depressurize the reactor is 3 times lower for Class IB-2 compared to Class IB-1/3 (0.002 vs. 0.006). Is this due to the time available before depressurization? Does this probability depend on how much time is available before the demand of this equipment? (i.e., what action can be taken to improve availability of this equipment before challenge regardless of how much time is available?)

(3) Please provide the basis for the "ARV No" branch probability of 0.006 for Sequences 4 to 7 and 0.6 for Sequence 12.

(4) Why is the "ARC No" branch probability of Sequence 7 significantly higher for this CET than others (0.05 vs. 0.01)? Why isn't this branch further divided depending on the RHR recovery? (This is done for cases which have even smaller probabilities.)

(5) Sequence 6 is binned as FSDH. This is the only place where a sequence is binned as "High" when FW scrubbing is available. Please explain.

(6) Why is RHR unavailability significantly lower for Sequence 11 compared to the similar sequences for other CETs (0.01 vs. 0.05 for IA)?

(7) Why isn't Sequence 12 further branched like the similar sequences of IB-3.1?

Response 725.59

Response to this Chapter 19 question not part of DCD (See SSAR Subsection 20.3.9).

Question 725.60

Questions on Classes ID and IIID CETs.

(1) How is core melt arrested in RPV? In this solely due to FW? (This branch existed in Amendment 4 which did not have FW.)

(2) Why is the probability of RHR recovery failure significantly higher in this CET than in others?

Response 725.60

Response to this Chapter 19 question not part of DCD (See SSAR Subsection 20.3.9).

Question 725.61

Questions on CET II.

The “CC No” branch fraction is significantly reduced from Amendment 4 to Amendment 8 (0.001 from 0.1). Besides the availability of firewater, what else contributed to this reduction?

Responses 725.61

Response to this Chapter 19 question not part of DCD (See SSAR Subsection 20.3.9).

20.3.10 Response to Tenth RAI — Reference 10

Question 430.59

Provide information on the following items, figures and tables: (10.1)

(1) Figure 10.1-2, Heat Balance for Guaranteed Reactor Rating

(2) Figure 10.1-3, Heat Balance for Valves-Wide-Open

(3) Table 10.1-1, Summary of Important Design Features and Performance Characteristics of the Steam and Power Conversion System, with regard to:

- Condensate pumps: total head (ft.) and motor hp.
- Low pressure heaters: Stage pressure (psia) and duty per shell (Btu/hr) for heaters Nos. 1,2,3, and 4.
- High pressure heaters: Stage pressure (psia) and duty per shell (Btu/hr) for heaters Nos. 5 and 6.
- Low pressure turbine exhaust pressure to condenser.

Response 430.59

The above information was provided in Amendment 7. The low pressure turbine exhaust pressure to the condenser reported under item C is included on the heat balance Figure 10.1-2 and Figure 10.1-3.

Question 430.60

Specify the value for time “T” in Figure 10.2-2. (10.2)

Response 430.60

Figure 10.2-2 has been revised to indicate T(sec) = 0.0008 x% NBR Power.

Question 430.61

Provide a description of the bulk hydrogen storage facility mentioned in Section 10.2.2.2. (10.2)

Response 430.61

This is a project (site) specific facility and is not within the scope of ABWR Standard Plant. For reference purposes, the standard design assumes a high pressure cylinder storage facility housed in a weather protected light structure having open top natural ventilation.

Question 430.62

Provide a description of the speed control unit, the load control unit and the flow control unit of the electrohydraulic (EHC) system. Your description should include how they perform their intended functions. Clarify whether the EHC system will fully cut off steam at 103 percent of rated turbine speed. (10.2)

Response 430.62

The main turbine EHC control system is now referred to as turbine digital control and monitoring (DCM) system. The DCM system, in conjunction with the reactor pressure control system, will provide manual and automatic control, protection and monitoring for the turbine-generator during normal operation of the unit. Specifically, the DCM will measure critical unit parameters, make and implement decisions, and regulate the position of the turbine main steam control valves to startup, load, unload and shutdown the unit. The system also includes built-in features to automatically protect the turbine-generator against abnormal operating conditions of overspeed, loss of oil, overheating, etc., which can be monitored and tested while the turbine-generator unit is in normal operation.

Triple-redundant digital control processors and protective logic circuitry is used to implement the closed loop control and protective functions necessary for safe operation of the turbine-generator. This redundant circuitry provides fault-tolerant operation of the turbine-generator unit for malfunctions within the control hardware, and allows on-line maintenance without need for shutting down the unit.

Inputs from redundant sensors are examined for validity and voted to protect against drift or other potential malfunctions. The voted inputs are provided to each of the three controllers where independent control calculations are performed. The controller outputs are also voted to eliminate control commands that may be erroneous to the component failure. Logic outputs are voted via two-out-of-three contact arrangements. Control action of the main control valve actuators is the result of the sum of the output currents from the triply redundant controllers. Process variable voting is thus extended to the triple coil servovalve with the first possible single failure being the mechanical servovalve itself.

The triply redundant architecture, with total independence between control channels (including input sensors and output drivers), therefore allows uninterrupted operation in the presence of one main channel malfunction. The triply redundant controllers of the DCM are identical, with the components of each being fully interchangeable. Any one controller can be shut down and removed from the system without affecting system operation. Individual power sources are provided for each controller. Furthermore, cabinet arrangement facilitates system maintenance by providing sufficient space for on-line component repair. The following sections describe the functions of the speed control function, the load control function, and the flow control function. Refer to Figure 20.3.10-1, simplified functional control diagram of the DCM.

(1) Speed Control

The governor speed control is fully coordinated with the trip system, and is capable of controlling speed accurately over the entire speed range from turbine gear to a speed high enough to test the protective overspeed trip devices.

Multiple speed feedback signals are derived from redundant sensors mounted around a toothed wheel attached to the turbine shaft. A separate probe is provided for each of the triple redundant electronic governor channels, and the toothed wheel and the speed probes are both located at the turbine front standard.

Each of the triplex speed control loops are used to control both speed and acceleration of the unit while off-line, and to provide correct regulation of the unit once it is synchronized to the system. Final control of the unit is determined by two-out-of-three vote from the three electronic governor channels.

The speed control unit produces the speed error signal error signal which is fed to the load control unit where it is combined with other signals to control the steam admission valves. The speed error signal is derived by comparing the speed reference (desired speed) with the actual speed at steady state conditions.

The desired speed target may be selected manually from the operator interface in the main control room. Speed targets are provided for selecting steady state operation at the lower speed holds (where thermal soaking may be required) as well as for selecting rated speed. A separate selection is also provided that when enabled, overspeeds the turbine (at the selected acceleration rate) for purpose of testing the overspeed capabilities. The machine coasts down to rated speed when the selection is disabled. Discrete acceleration reference signals are also selected.

A function called the “wobbulator” is incorporated in the speed control unit to slowly vary turbine speed above and below the high speed hold. The wobbulator prevents the turbine from running at a constant speed near critical bucket resonances.

A governor “non-regulating” function is available as an option for operator selection. A frequency deadband is introduced within which no speed error is generated.

The speed control function also provides line speed matching capabilities for synchronizing the unit to the electrical grid system. Three methods of line speed matching are available:

(a) An automatic speed matcher is incorporated in the speed control function to simplify synchronization of the unit. If the following permissives have been satisfied, the automatic speed matcher will be enabled:

(i) Automatic speed matching selected

(ii) Synchronous speed selected

(iii) At speed target indicated

(iv) Overspeed test not selected

(v) CIRCUIT BREAKER OPEN indicated

When the automatic speed matcher is in operation, the circuit will adjust the turbine speed to the desired slip frequency until the circuit breaker has been closed. The automatic speed matcher can be removed from service at any time.

(b) Line speed matching may be performed by remote equipment. With the remote speed matcher, turbine speed is adjusted by the DCM according to increase and decrease pulses received from an automatic synchronization equipment. In this case, the slip frequency is established by the automatic synchronization system.

(c) Speed matching may also be performed manually by operation of increase/decrease selections at the operator interface in the main control room when the semi-automatic mode is selected.

(2) Load Control Function

The basic purpose of the load control function is to accept input signals from other functions of the DCM system and to use these signals in conjunction with functions internal to the load control function to compute flow reference signals for the flow control function. Switching signals indicating operating conditions are also supplied to other parts of the DCM system.

The load control functions may be grouped as follows:

(a) Sensing functions are provided to detect and generate signals proportional to parameters that affect loading of the unit.

(b) Limiting Functions are provided to electrically constrain the flow reference signals in Response to signals from the sensing circuits, from the speed control function, or from devices detecting the state of plant components.

(c) Computing functions are provided to generate flow reference signals for the valve stems, considering the desired load signal, the limiting functions, and the speed error signal from the speed control function.

(d) Logic functions are provided to ensure that necessary permissives have been satisfied prior to changes in mode of operation, to communicate status information between the load control function and other elements of the DCM system, and to provide switching signals to devices in the DCM system.

Since each of the described functions of the load control function may involve more than one of the basic generalized functions listed above, each description given below will involve discussion of the appropriate functions (sensing, limiting or computing) as well as the logic functions involved. The load control functions are:

(i) Load Reference
(ii) Load Runbacks
(iii) Valve Position Limit
(iv) Load Setbacks
(v) Control Valve Testing
(vi) Valve References

Load Reference—The Load Reference is a value corresponding approximately to current desired load. The load reference signal is also provided to the reactor pressure control system for calculation of the load demand error signal. The load demand error signal is an input to the reactor recirculation flow control system for automatic load following operations. The load control function changes the load reference at the selected loading rate towards the selected target load. The load reference may be changed by any of the following sources, by changing the target load: The target load being lowered or raised at the operator control interface in the main control room. Increase or decrease signals are generated by the automatic or manual speed match functions and may be received from a remote source when some remote form of operation has been selected. Certain abnormal conditions require that the load reference be run back in the decreasing load direction. These runbacks are discussed in the following section “load runbacks”.

Load Runbacks—Logic is incorporated to reposition the load reference when certain abnormal operating conditions are detected. Runbacks must be initiated by a signal from the prior load unbalance, if the load reference signal exceeds a preset load limit, or by a signal from the plant computer system indicating that abnormal plant conditions require a reduction in load.

The load runback is enabled by a pulsed or continues-contact closure. Continues-contact closure will run the load set down from rated load toward 2% load in 45 seconds. The maximum rate of change of the load reduction is 133% per minute. The

minimum pulse length is 225 milliseconds. Load increase demands are interrupted during load runbacks.

Load Position Limit—A valve position limit function is provided in the DCM to limit steady state opening of the controlling valves to limit steam flow. An additional feature is a runback of the load reference to a point 2% above the setting of the valve position limit such that when the limit is lifted, it does not allow a sudden load increase.

Load Setbacks—Four load setback inputs are available that will set the valve position limit signal back upon a contact closure from the plant computer. They can be used by the customer upon loss of circulating water pumps, low condenser vacuum, etc., to reduce load rapidly to a given level regardless of system frequency.

The four setbacks have separately adjustable valve position limit levels and setback rates to provide for various contingencies. Several signals from the customer's plant computer nay be associated with each of the four variable rate load setbacks. These variable rate setbacks have a range of 0.5% per second to 10% per second. The setback levels have a range of essentially 0% to 100%.

When indication of a limiting condition is received, the setback signal reduces the valve position to the preselected limit level at the preselected rate. Simultaneously, signals are provided to the load reference function to run back the target load to slightly above the level of the appropriate limit. Should more than one setback be activated simultaneously, load will be set back to the lowest limit at the fastest rate. Again, this condition will be indicated on the operator interface. All customer-provided signals which initiate a setback must be cleared before normal conditions are re-established.

Control Valve Testing—Circuitry is provided to test each valve separately while the unit is operating under load. The tests are initiated from the operator interface in the main control room and cause each valve to close at constant rate to verify free operation.

Near the closed end position (approximately 90% closed), a signal is given to the fast closing devices in each valve actuator to verify that they are responding correctly. The motion of the valves during testing is displayed to the operator so that correct performance can be observed.

Valve References—A total of three valve reference signals are generated in the load control function to produce flow references for the #2 main stop valve, the control valves and intercept valves, respectively.

The flow reference for the #2 main stop valve is generated by adding the operator's warming bias signal with the speed error and passing the result to the flow control function as main stop valve #2 warming reference.

For the control valve reference, the speed error and the load reference are added. This resulting signal is subsequently combined with the steam flow demand signal from the reactor pressure control in a low-value selector to form the control valve flow reference signal passed on to the flow control function. Normally, the turbine flow reference signal is biased higher than the steam flow demand signal from the reactor pressure control system, and hence, the pressure control signal (steam flow demand) will pass through the low-value selector and becomes the control valve flow reference signal. The control valve flow reference signal is subtracted from the steam flow demand signal from the reactor pressure control system to form the bypass flow demand. When the main turbine cannot accept all the steam generated from the reactor, the excess steam is thus bypassed to the main condenser through turbine bypass valves.

The speed error, the load reference and appropriate bias values are added to form intercept valve flow reference for passing to the flow control function.

The regulation relative to the speed error for the valves sets are:

Main Stop Valve #2	5%, fixed,
Control Valves	adjustable from 2.5% to 7.5%, set to 5%, at the factory.
Intercept Valves	2%, fixed

With a regulation of 5% for the control valves (20% change in load reference per % change in speed error), a 5% increase in speed will fully cut off steam to the turbine. However, since the turbine bypass capacity is only 33%, the reactor pressure increase will result in a high power or high pressure scram to shut down the reactor.

(3) Flow Control

The four turbine control valves, the three turbine steam bypass valves, three of the six intercept valves (CBIV), and the #2 main stop valve bypass are designed to operate on closed loop control. The remaining main stop valves, intercept valves and reheat stop valves will all operate on open loop control resulting in either a fully open or fully closed position.

The flow control function will determine, from the main stop valve, control valve and intercept valve flow references, the required sequence of valve strokes and

instantaneous position of each valve and implement these positions through the associated valve position circuits. The reactor pressure control system, interfacing with the turbine load control function, will control the steam bypass valves.

Electro hydraulic servovalves are provided on all controlling valve actuators to convert the electrical control signals from the control system to precisely regulated flow of servofluid into valve actuators. The actuators, in turn, provide the mechanical forces to position the steam valves in Response to the commands from the control system.

The actuators are equipped with triple coil sevovalves and three redundant linear position transducers (LVDT) for triple redundant valve position control. The positioning system is able to withstand a failure of any single element in the positioning system with less than 5% of full stroke steady state distortion of the valve position.

3.1 Main Stop Valve Positioning

The main stop valve (MSV) #2 has been position control for the full stroke of its internal bypass valve, foe use in chest and rotor warming. The actuator for this internal bypass valve is equipped with a two coil servovalve, a single position transducer, and a fast acting solenoid valve.

MSV #1, 3, and 4 are positioned either fully open or fully closed. These actuators are equipped with a solenoid test valve, a single position transducer, and a fast acting solenoid valve. Circuits and logic for positioning and testing of these stop valves are provided.

3.2 Control Valve Positioning

All four control valves are positioned continuously over their entire stroke. Each actuator is equipped with a three coil servovalve and three position transducers. All control valves will be closed fast simultaneously by power load unbalance circuit by energizing fast acting solenoid valves on each actuator. Each control valve is tested regularly with the help of its servovalve and fast acting solenoid valve. The positioning circuitry will withstand failure of a single channel. If two channels should fail, a fully open valve will remain open, whereas a partially open valve will go closed. The reactor transients associated with failure of control valves is analyzed in Chapter 15.

3.3 Intercept Valve Positioning

Combined Intercept Valve (CBIV) #1, 2, and 3 have continues positioning capability from the intercept flow valve reference developed by the load control function. The actuators are equipped with three coil servovalve and

three position transducers, as well as fast acting solenoid valve for fast closing. CBIVs #4, 5, and 6 are positioned as “slaves” based on the position of “masters” CBIVs #1, 2, and 3 respectively. The actuators on slaved valves are equipped with one solenoid test valve, one fast acting solenoid valve, and one position transducer. While a master valve is being opened, its slave remains fully closed until the master valve is being opened, its slave remains fully closed until the master reaches the 90% open position at which time the slaved valve will be commanded to go fully open by actuation of its test solenoid valve. When the master valve is moving in the closed direction, its slave valve remains open until the master has reached the 50% open position at which time the slaved valve will be commanded closed by actuation of its test solenoid valve. Position signals are generated from position transducer feedback.

3.4 Bypass Valve Positioning

All three bypass valves are positioned continuously over their entire stroke by the reactor pressure control system. Each actuator is equipped with a three coil servovalve. The bypass valves will open in sequence, depending on the magnitude of the bypass steam flow demand signal. Each bypass valve is tested regularly with the help of its servovalve and fast acting solenoid valve. The positioning circuitry will withstand failure of a single channel. If two channels should fail, a fully open valve will remain open, whereas a partially open valve will go closed. Upon a turbine/generator trip, the bypass valve fast acting solenoid valve is energized, allowing fast opening of all bypass valves to minimize the pressure increase in the reactor pressure vessel.

Question 430.63

For the turbine overspeed protection system (described in Section 10.2.2.4), the SSAR referred to redundant electrical trip signals. Provide information on the power source associated with each of the trip circuits (10.2).

Response 430.63

If the normal speed control system should fail, the overspeed trip devices must close the steam admission valves to prevent turbine overspeed. The mechanical trip overspeed mechanism operates at 110% of rated speed. Three speed signals independent of the normal speed control unit provide input to the electrical backup overspeed trip. Two out of three logic is employed in the electrical backup overspeed trip circuitry.

Electrical power required by the turbine digital control and monitor (DCM) system is provided by two separate uninterruptable power sources, the Vital Non-Class 1E 120 VAC busses (refer to Figure 8.3-6, Plant Vital CVCF Single Line Diagram). AC power from these two independent sources is provided to rectifiers which convert the 120VAC to 125 VDC. The rectifier outputs feed a high value gate. The high value gate output is the 125 VDC bus used to

trip system and the various DCM subsystems. Circuit breakers and fuses are provided as necessary to protect the power distribution system from vulnerability to single point failures.

The electrical overspeed trip system (backup overspeed trip or BOUST) contains two "trip busses", one at 24 VDC (energized by redundant power supplies) and one at 125VDC (energized directly from the 125 VDC bus described above). The BOUST makes trip input to the hydraulic system from its 24 VDC bus with a "de-energize-to-trip" solenoid valve and from 125 VDC bus with an "energize-to-trip" solenoid valve.

The mechanical overspeed trip is powered entirely by spring force, energized at the time of turbine reset, and implements its trip command by "depressurization-to-trip."

Question 430.64

As presented in Section 10.2.2.4 of the ABWR SSAR, the closing time of the extraction nonreturn valves is less than 0.2 seconds, while it is 2 seconds at current BWR plants. Provide additional information on the design of these valves that supports the difference between the above closing time values. (10.2)

Response 430.64

Subsection 10.2.2.4 was in error and revised to indicate the closing time of the extraction nonreturn valves to be less than 2 seconds.

Question 430.65

Clarify whether at least one main stop valve, control valve, reheat stop valve and reheat intercept valve will be inspected at approximately 3-1/3 years by dismantling them, and whether visual and surface examinations will be conducted for the valve seats, disks and stems. (Note: The above is an acceptance criterion for SRP Section 10.2) (10.2)

Response 430.65

Subsection 10.2.3.6 will be revised to indicate that one valve of each type will be inspected after each fuel cycle or every 3-1/3 years, whichever is less. As stated in Subsection 10.2.3.6 Item 3 under the heading "The inservice inspection of valves important to overspeed protection," all main stop valves, main control valves, and CIVs inspections will be conducted for:

(1) Wear of linkage and stem packings

(2) Erosion of valve seats and stems

(3) Deposits on stems and other valve parts which could interfere with valve operation

(4) Distortions, misalignment

These inspections will be accomplished by disassembly of the valves. Subsection 10.2.3.6 has been revised to include a statement that the valves are to be dismantled and visual and surface examinations conducted of valve seats, disks, and stems.

Question 430.66
Identify preoperational and startup tests of the turbine generator in accordance with Regulatory Guide 1.68, "Initial Test programs for Water Cooled Power Plants," as an interface requirement. (10.2)

Response 430.66
The preoperational and startup tests of the turbine generator are included in Section 14.2

Question 430.67
As stated in Section 10.3.2.1, "the four main steam lines are connected to a header upstream of the turbine stop valves....". However, according to Figure 10.3-2a, the main steam header is located downstream of the turbine stop valves. Identify whether the statement or figure is in error and revise the item in error so that the SSAR is consistent. (10.3)

Response 430.67
The main steam header upstream of the turbine stop valves referred to in Subsection 10.3.2.1 is shown on Figure 10.3-1. The line shown on Figure 10.3-2a downstream of the turbine stop valves is provided to equalize pressure upstream of the turbine control valves. The Subsection 10.3.2.1 text and Figure 10.3-1 are therefore consistent and do not need to be revised.

Question 430.68
Provide information on the leakage detection system for steam leakage from the MSSS in the event of a steam line break. Also provide information on the stated "safety feature designed into the MSSS" that will prevent radiation exposures in excess of the limits of 10CFR100 in the event of a break of a main steam line or any branch line (SSAR Section 10.3.3.) (10.3)

Response 430.68
The leak detection system (LDS) is designed to monitor leakage from the main steam lines and from the branch steam line to RCIC. Upon detection of a leak in the main steam lines, LDS will automatically isolate the source of the leak by closing the MSIVs, both the inboard and outboard containment isolation valves. The specific variables which LDS monitors to isolate the main steam supply in the event of a steam line break are:

(1) High radiation in the MSL tunnel area

(2) High ambient temperature in the MSL tunnel area

(3) High ambient temperature in the main turbine area

(4) High flow in the main steam lines

(5) Low pressure in the inlet steam line to the main turbine

(6) Low pressure in the RCIC steam line

(7) High flow in the RCIC steam line

Any of the above variables items (a) thru (e) will initiate closure of the MSIVs and isolate the main steam supply to the turbines. Either variable items (f) or (g) above will isolate the main steam line to RCIC turbine.

The safety features designed in the MSSS is the automatic closure of the containment isolation valves which isolate the source of the leak. This prevents release of radioactivity to the environment and minimize exposure to radiation.

Question 430.69

For the following items identified in SSAR Figure 10.3-1:

(a) Deaerating steam to condenser

(b) Offgas system

(c) Steam jet air ejectors

(d) Turbine gland sealing system

(e) Reheater

(f) Main steam bypass (turbine bypass)

Provide the following information:

a. Maximum steam flow (lbs/hr)

b. Type of shut-off valve(s)

c. Size, quality, design code. closure time, actuation mechanism and associated motive power of the valve(s).

Response 430.69

Figure 10.3-1 has been revised and shows the power cycle auxiliaries using main steam (all services other than the turbine bypass) divided into two groups such that the supply line to each group has one isolation valve.

The grouping of the steam supply services is made to facilitate the pipe routing. As an example the steam supply to the turbine gland seal system is grouped with the steam supply to reheaters 1A and 1C. The turbine gland seal system and reheaters 1A and 1C are physically within close

proximity of each other. Similarly, the steam supply to the condenser sparger, the steam jet air ejector, offgas system, and reheaters 1B and 1D are grouped together.

(1) The maximum steam flow for each steam service identified (except for the deaerating steam service to the condenser) are taken from the valves-wide-open (VWO) heat balance, Figure 10.1-3.

(a) Maximum deaerating steam flow to the condenser (this system is not shown on the heat balance) is approximately 9,072 kg/h.

(b) The steam supply flow to the offgas system is included in the steam supply flow shown on the heat balance to the steam jet air ejector. The total steam flow for the Steam Jet Air Ejector and the offgas system is 8,528 kg/h r as shown on Figure 10.1-3.

(c) Turbine Gland Seal System steam flow is nominally 9,979 kg/h at 14 kg/cm^{2}a and 605 kcal/kg for the VWO condition as shown on Figure 10.1-3. The maximum design flow however is based on a gland clearance equal to twice the normal clearance, and is estimated in first approximation to be 20,412 kg/h.

(d) The steam supply flow to the four reheaters is 751,096 kg/h as indicated on the VWO heat balance Figure 10.1-3.

(e) The turbine bypass steam flow is approximately 33% of the maximum guaranteed heat balance steam flow of 7,640,835 kg/h shown on Figure 10.1-2. The total turbine bypass steam flow is therefore 2,546,945 kg/h.

The steam flow for the two groups of services is calculated as follows:

- Design steam flow for the supply line to reheaters 1A and 1C and the turbine gland seal steam is approximately 396,893 kg/h derived by taking one-half of the total heat balance reheater steam of 751,096 kg/h and adding 20,412 kg/h for the turbine gland seal steam flow.

- Design steam flow for the supply line to the condenser sparger, steam jet air ejector and offgas systems and reheaters 1B and 1D is approximately 385,553 kg/h derived by taking one-half of the total heat balance reheater steam flow and adding the steam flow for the steam jet air ejector and offgas system steam flow. (The deaerating steam flow is not included in this total since deaerating using main steam only occurs during startup.)

(2) The main steam supply shutoff valves for the two steam supply lines (does not include turbine bypass) are to be power operated gate valves.

(3) Each of the two steam supply shutoff valves will be 400A, quality group B, ANSI B16.1 design code, having a closure time of 2 seconds, and having air operators and spring closure mechanisms.

NOTE: Refer to response to Question 430.84 for additional information on the turbine bypass valves.

Question 430.70

Provide information on the following items:(10.3)

Question 430.70a

Analysis for steam hammer and relief valve discharge loads and issues.

Response 430.70a

The acoustic loads due to turbine stop valve closure (TSVC-steam hammer) and safety relief valve discharge loads are analyzed using GE standard practices for the ABWR main steam (MS) and safety relief valve discharge line (SRVDL) piping systems. A discussion of these acoustic loads are discussed below.

Turbine Stop Valve Closure (TSVC)—Prior to turbine stop valve closure, saturated steam flows through each main steam line at nuclear boiler rated pressure and mass flow rate. Upon a closure signal, the turbine stop valves close rapidly and flow stops at the upstream side of these valves at the instant valve closure is achieved. A pressure wave is created and travels at sonic velocity toward the reactor vessel through each main steam line. Steam flow into each main steam line from the reactor vessel continues until the fluid compression wave reaches the reactor vessel nozzle. Repeated reflection of the pressure wave at the reactor vessel and stop valve ends of the main steam lines produce time varying pressures and velocities at each point along the main steam lines. The combination of fluid momentum changes, shear forces, and pressure differences cause forcing functions which vary with position and time, to act on the main steam piping system.

The analysis of the TSVC transient consists of a sequential time history of the fluid flow equation to generate a time history of the fluid properties at numerous locations along the pipe. The fluid transient properties are calculated based on the nuclear boiler rated steam flow rate and pressure.

The time history method of analysis is used to determine the piping system Response to the TSVC transient. The force time histories are applied at locations on the piping system where fluid flow changes direction, thus causing momentary reactions. The resulting loads on the main steam line and at the attachment points are combined with other loads (e.g., pressure, thermal, and seismic).

SRVDL Acoustic Loads—An SRV lift results in a transient that produces momentary unbalanced forces acting on the piping system, for the period from opening of the SRV until a

steady discharge flow from the RPV to the suppression pool is established. This period includes clearing of the water slug from the end of the discharge piping submerged in the suppression pool. Pressure waves traveling through the discharge piping following the relatively rapid opening of the SRV, cause the SRV discharge piping to respond. This in turn produces forces that act on the main steam and SRV piping.

The analysis of the relief valve discharge transient consists of a sequential time history solution of the fluid flow equation to generate a time history of the fluid properties at numerous locations along the pipe. The fluid transient properties are calculated based on the maximum set pressure specified in the main steam system specification and the value of the ASME B&PV Code flow rating increased by a factor to account for the conservative method of establishing the rating. Simultaneous discharge of all valves is considered to induce maximum stress in the piping. Reaction loads on the pipe are determined at each location corresponding to the position of an elbow. These loads are composed of pressure times area, momentum change, and fluid friction terms.

The time history method of analysis is used to determine the main steam and SRVDL piping system Response to relief valve operation. The forces are applied at locations on the SRVDL piping system where fluid flow changes direction, thus causing momentary reactions. The resulting loads on the SRV, the main steam line, and the discharge piping are combined with other loads (e.g., pressure, thermal, and seismic).

Question 430.70b

Power source to the solenoid valves for the inboard and outboard main steam isolation valves.

Response 430.70b

There are three solenoids per MSIV. The power sources are Division I and II essential power with the three solenoid for testing being either one or two.

For further details refer to Chapter 7 under leak detection and isolation.

Question 430.70c

Location of seismic interface restraint (e.g., interface of which buildings?)

Response 430.70c

The seismic interface restraint is outside the outboard MSIVs, but within the reactor building. (See Figure 5.1-3)

Question 430.70d

Route which the main steam lines, including the branch lines, pass up to the turbine stop valves.

Response 430.70d

The main steam line routing including branch lines up to the turbine stop valves inside the turbine building is shown on Figures 1.2-25, 1.2-26, and 1.2-28.

Question 430.70e
Specific design features provided to protect safety related portions of the main steam supply system, including the main steam isolation valves, against externally and internally generated missiles and adverse natural phenomena such as floods, hurricanes and tornadoes.

Response 430.70e
The safety-related portion of the main steam lines can be found in Section 3.9. To summarize, the safety-related portion of main steam lines are located in a Seismic category I structure that protects it from external events (i.e., tornadoes, hurricanes, external missiles). For internal missiles protection features, see Section 3.5 for details.

Question 430.71
Describe provisions for operation of the main condenser with leaking condenser tubes. (10.4.1)

Response 430.71
The condenser is provided with leakage detection instrumentation in each hotwell outlet, each condenser tube sheet leak detection trough, and condensate is further monitored at the condensate pump discharge. The type of instrumentation to be utilized is site specific. The condensate cleanup system includes hollow fiber filters and deep bed demineralizers and will ensure the water quality is maintained up to the (site specific) design condenser leak rates. The leak detection instrumentation will allow the operator to identify the leaking tube bundle, initiate power reduction and faulty tube bundle drain down if required, and arrange for water box entry and leak repair at the earliest appropriate time.

Question 430.72
Provide the permissible cooling water inleakage rate and the allowed time of operation with inleakage. (10.4.1)

Response 430.72
The polishing system is sized to meet the chemistry requirements for continuous operation while operating continuously with a condenser leak of 227E-06 m^3/h and to maintain water quality during an orderly unit shutdown (not longer than 8 hours) with a leak of 22.7E-03 m^3/h until repairs can be made. The design is adequate to clean up the feed and condensate system during plant heatup and low power operation without limiting plant startup time. The number and sizing of the ion exchangers are such that the functional requirements are met while permitting the replacement of resin in one ion exchanger at a time. The ABWR Standard Plant design features facilitate replacement of ion exchange resin.

Question 430.73
Provide information on the following items:(10.4.1)

(a) Provisions incorporated into the main condenser to preclude component or tube failure due to steam blowdown from the turbine bypass system.

(b) Worst possible flood level in the applicable buildings due to complete failure of main condenser and provisions for protecting safety related equipment located in the buildings against such flooding (note that ABWR SSAR Section 3.4 does not discuss the turbine building).

Response 430.73

(a) Specific provisions inside the condenser to preclude condenser tube damage due to turbine bypass steam impingement are to be defined by the condenser vendor for each project. Typically the provision inside the condenser consists of a horizontal perforated steam distribution pipe enclosed in a perforated guard pipe designed to protect the condenser internals from steam impingement. The perforated pipe and its guard pipe run the full length of the condenser and are supported above the condenser tube bundle.

(b) See revised Subsection 10.4.5.6 for the response to this question.

Question 430.74

Discuss how the components of the main condenser evacuation system (MCES) conform to the guidelines of Regulatory Guide 1.26, 1.33. and 1.123 with respect to quality group classification and quality assurance programs.(10.4.2)

Response 430.74

The main condenser evacuation system is designed to Quality Group D as defined in Regulatory Guide 1.26. The condenser evacuation system is designed to meet the quality assurance requirements for design, construction, and operation according to the guidelines of Regulatory Guides 1.33 and 1.123.

Question 430.75

Provide the design pressure and normal operational absolute pressure for the MCES components that could contain potentially explosive gas mixtures. (10.4.2)

Response 430.75

The offgas portion of the MCES, that is downstream of the 2d stage steam jet air ejectors, is designed to withstand the effects of a hydrogen detonation. Design for extremely short duration (microsecond) loadings is outside the scope of normal industry design codes (ANSI B31.1 and ASME Section VIII). The design pressure is based on maximum detonation pressure increase factors varying from 2 to 170 for piping depending on layout. For components such as pressure vessels this increase is approximately 20. The appropriate increase factor is applied to the absolute operating pressure in each portion of the system to give the maximum static equivalent hydrogen detonation pressure. Once the system operating pressures, pipe diameters and layout are established, the detonation pressures for the piping and components can be established.

Question 430.76
Identify the radiation monitoring provisions for the mechanical vacuum pump exhaust. Is the exhaust filtered by charcoal absorber and HEPA filters prior to release? (10.4.2)

Response 430.76
The mechanical vacuum pump exhaust is monitored for radiation prior to discharge to the turbine building exhaust ventilation system. The turbine building ventilation exhaust is filtered by a moderate efficiency filter and monitored for radiation prior to discharge to the plant vent. Reference Figure 9.4-2a and Figure 10.4-1.

Question 430.77
Identify the number, location and functions (i.e., recording and annunciating alarm) performed by the hydrogen analyzers. Clarify whether they can withstand a hydrogen detonation. (10.4.2)

Response 430.77
Two parallel independent hydrogen analyzers are to be provided to measure the hydrogen content of the offgas process stream downstream of each offgas condenser. The hydrogen concentration analyzer signals are indicated and recorded in the main control room and the analyses provide for an independent alarm annunciation in case of high hydrogen concentration in the offgas process stream.

The hydrogen analyzers are designed to withstand a hydrogen detonation.

Question 430.78
Clarify whether the air ejectors are redundant in the sense that one of them is a standby. (10.4.2)

Response 430.78
The steam jet air ejector system consists of two 100% capacity, multiple element, multistage, steam jet air ejector (SJAE) units. Figure 10.4-1 has been revised to clearly indicate there are two sets of 1st and 2nd stage SJAEs and two intercondensers. One set of 1st and 2nd stage SJAEs and its intercondensers is normally in operation with the redundant set in standby.

Question 430.79
Identify the components and portions of the MCES that are designed to withstand a detonation in the system. (10.4.2)

Response 430.79
The SJAE discharge piping up to the offgas system equipment and interconnecting piping is designed for hydrogen detonation.

Question 430.80
Discuss how the design of the turbine gland sealing system (TGSS) conforms to the guidelines of Regulatory Guide 1.26 as it relates to the quality group classification for the system, and the Regulatory Guide 1.33 and 1.123 as they relate to the quality assurance program. (10.4.3)

Response 430.80
The turbine gland sealing system is designed to Quality Group D as defined in Regulatory Guide 1.26. The turbine gland sealing system is designed to meet the quality assurance requirements for design, construction, and operation according to guidelines of Regulatory guides 1.33 and 1.123.

Question 430.81
Provide a description of the exhauster blower provided for the TGSS. (10.4.3)

Response 430.81
The two exhauster blowers are 100% capacity, motor driven blowers having inlet and outlet butterfly isolation valves. The exhauster blower assembly is mounted directly on top of the gland steam condenser. One exhauster blower is in normal operation with the other on standby. The exhauster blower in operation maintains a slight vacuum in the gland steam condenser. The exhauster blower is designed to discharge the air-inleakage to the turbine building ventilation exhaust system which discharges to the plant vent.

Question 430.82
ABWR SSAR Subsection 10.4.3.1.2 states that the TGSS exhausts the noncombustible gases to the turbine building equipment vent system, however, Subsection 10.4.3.3. states that the TGSS exhausts the noncombustibles gases eventually to the main vent. Clarify how the TGSS exhausts are monitored. Also, clarify whether the main vent mentioned above is the plant vent referred to in SSAR Section 11.5. (10.4.3)

Response 430.82
The TGSS exhaust is monitored for radiation prior to discharge to the turbine building ventilation system. The turbine ventilation system exhausts to the plant vent. Subsections 10.4.3.1.2 and 10.4.3.3.3 have been revised to indicate the TGSS exhausts to the turbine building ventilation system which exhausts to the plant vent.

Question 430.83
What is the source for the auxiliary steam? Justify why an advanced design will use essentially radioactivity free auxiliary steam (see SSAR Section 10.4.3.2.2) as a backup sealing source rather than as normal sealing source. Note that the use of a process steam supply for sealing purpose can result in significant operational radioactivity releases. (10.4.3)

Response 430.83
The source of auxiliary steam in the ABWR is a conventional plant start-up package boiler.

The ABWR turbine gland seal system design is fully conventional and proven except with respect to the generation of sealing steam for use during normal plant operation. In recent BWR plants, this steam evaporator that reboiling main steam or crossaround steam as heating fluid. In older BWR plants main steam or crossaround steam is used directly for gland sealing but this direct feed process has resulted in significant noble gas discharge to the environment, as well

as in-plant contamination, where the type of fuel that was then used in these plants experienced abnormal levels of failures.

With modern BWR fuel, experience shows that failure rates are so low that gland sealing can safely be achieved using process steam directly. Yet, to be extra conservative and avoid any potential uncontrolled radioactivity releases without incurring the penalty of a sealing steam evaporator, the ABWR reference design generates this steam from the high pressure heater drain tanks using tank connections such that the incoming drains are routed via a liquid drain loop seal. Thus, only the minimal amount of cycle gases that may be dissolved in the condensed drains is allowed to enter the drain tanks. Sealing steam is taken from the drain tanks, through the tank vent, as the degassed drains are allowed to reboil at such a slow rate that no low volatility product can escape the liquid phase and contaminate the vented steam.

Through this process, relatively high purity sealing steam is generated for use during plant normal operation above approximately 50% load. During plant startup, sealing steam is provided directly by main steam but the long term average amount of radioactivity that may be released even with abnormally high levels of fuel failure is still quite small as plant startup radioactivity levels are relatively low and duration is relatively short. Finally, to permit continued plant operation even in the extremely unlikely presence of multiple fuel rod failures, the gland seal system includes a connection for supplying sealing steam from the plant auxiliary (startup) boiler.

Question 430.84

For turbine bypass system:(10.4.4)

(a) Provide figures which delineate the system and its components.

(b) Clarify whether the system includes pressure-reducer assemblies for the bypass valves to reduce steam pressure prior to steam discharge into the condenser.

Response 430.84

(a) Figures 10.4-9 and 10.4-10 have been added to delineate the system and its components.

(b) The detailed design will follow standard industry practice and reduce the pressure sequentially through orifices prior to entering the condenser. In addition, please note that the valves will be 22.9 cm dia globe type as shown in Figure 10.4-9 which also indicates the actuation mechanism and associated motive power.

Upon a turbine trip or generator load rejection, the start of the bypass valve flow is delayed no more than 0.1 seconds after the start of the main turbine stop or control valve fast closure. A minimum of 80% of the bypass system capacity is established within 0.3 seconds after the start of the stop or control valve closure.

The bypass system quality design codes are defined in Section 3.2.

Question 430.85

For the circulating water system: (10.4.5)

(1) Describe the function of the waterbox fill and drain subsystem mentioned in ABWR Subsection 10.4.5.2.1. Also, describe the "makeup water" shown in SSAR Figure 10.4-3.

(2) Provide the worst possible flood levels that can occur in the applicable plant buildings as a result of circulating water system failure and indicate how safety-related equipment located in the buildings is protected against such flooding.

Response 430.85

(a) The waterbox fill and drain subsystem performs the following two functions:

– Following circulating water system maintenance and/or inspection from the inside, the subsystem uses turbine service water outflow to completely refill any previously drained section of the circulating water system. Thus, the circulating water pump can be started without any difficult valve throttling being required and without risk of water hammer.

– The fill and drain subsystem is also used to permit rapid draining of the series connected condenser water boxes by gravity flow into the circulating water sump. The sump is provided with a vertical wet pit centrifugal pump which can discharge the collected drains, via the turbine service water system discharge header, to the power cycle heat sink (cooling tower basin, where applicable).

Overall, the subsystem function is to permit expeditious draining and refill of the condenser tube side and, thus, contribute to the plant ability to respond to potential circulating water leaks with minimal loss of availability.

"Make-upwater" to the circulating water system is provided from the site water supply, as required to compensate for cooling tower evaporation and drift water losses. Makeup water flow rate is normally controlled automatically to maintain a constant level in the cooling tower basin.

(b) As noted in Response to Question 430.73, the worst possible flood that can affect the turbine building would result in a flood level slightly higher than grade. Such a flood, however, would not impact any safety related equipment as no such equipment is located inside the turbine building and all plant safety related facilities are protected against external flooding.

Question 430.86
How is the remote manual motor-operated shutoff valve (gate valve F 282) powered? (10.4.7)

Response 430.86
From a non-safety grade bus.

Question 430.87
Describe the design features provided to protect the safety-related portion of the condensate and feedwater system from internally generated missiles.

Response 430.87
The portion of the feedwater system outboard of the outer feedwater stop valve and the condensate system are not safety-related. The portion of the feedwater system inboard of the outer feedwater stop valve is safety-related. See Section 3.5 for design features that protect the safety-related portion of the feedwater system from internally generated missiles.

Question 430.88
Provide a summary of the analysis of a postulated high energy pipe break for the feedwater piping in the steam tunnel including the design features provided (e.g., pipe whip restraints) for preventing adverse effects resulting from pipe whip, jet impingement and flooding.

Response 430.88
Leak before break (LBB) methodology will be used for the feedwater piping system; therefore, no high-energy pipe break can happen for the feedwater piping system. See Section 3.6 and Appendices 3E and 3F for details on design features provided.

Question 430.89
Provide information on the analysis that shows that the entire feedwater system piping can accommodate water hammer events and the means to prevent water hammer loads due to hydraulic transients (10.4.7)

Response 430.89
During normal power operation, water hammer is not a problem because variable speed feedwater pumps are used to vary feedwater flow for reactor water level control. Feedwater control valves that could rapidly interrupt feedwater flow, causing water hammer are not used foe normal operations.

During low power conditions (less than approximately 10% power), a slow acting low flow control valve is used to control reactor water level in conjunction with one variable speed motor driven pump. Features of the feedwater control system insure that there will not be large sudden changes in feedwater flow that could induce water hammer.

Question 430.90

Provide detailed information on the feedwater control valve and controller design including the features that ensure the design will be stable and compatible with the system and imposed operating conditions. (10.4.7)

Response 430.90

The feedwater control system (FWCS) is related but separate from the condensate and feedwater system. The FWCS design is described in Subsection 7.7.1.4. The FWCS was designed using control system techniques to assure adequate gain and phase margin for stability. Evaluations were then performed using plant dynamic analysis computer codes (e.g., REDYA) to confirm that the FWCS design satisfies all performance requirements, including stability specifications. Preliminary controller gains and compensator time constants have been established using these analytical tools to assure that the complete system will be stable for all operating conditions. These settings will be confirmed during plant power ascension testing, and adjustments can be made, if necessary, based on the test results.

Chapter 10 has been revised to reflect a modified condensate feedwater system design which does not have any feedwater control valves for power operation. The normal feedwater pumping configuration will have three adjustable speed motor driven feedpumps, which do not utilize feedwater control valves. The only modulating valve in the feedwater system is a low flow control valve for use at low power operating conditions. The low flow FWCS has been specifically designed to minimize cycling in feedwater nozzles. Since the emphasis is on minimizing feedwater flow variations, the low flow control valve will not be required to be highly responsive. The evaluations and testing described above have also been performed on the low flow feedwater control design. Therefore, there is no stability concern associated with the low flow feedwater control valve.

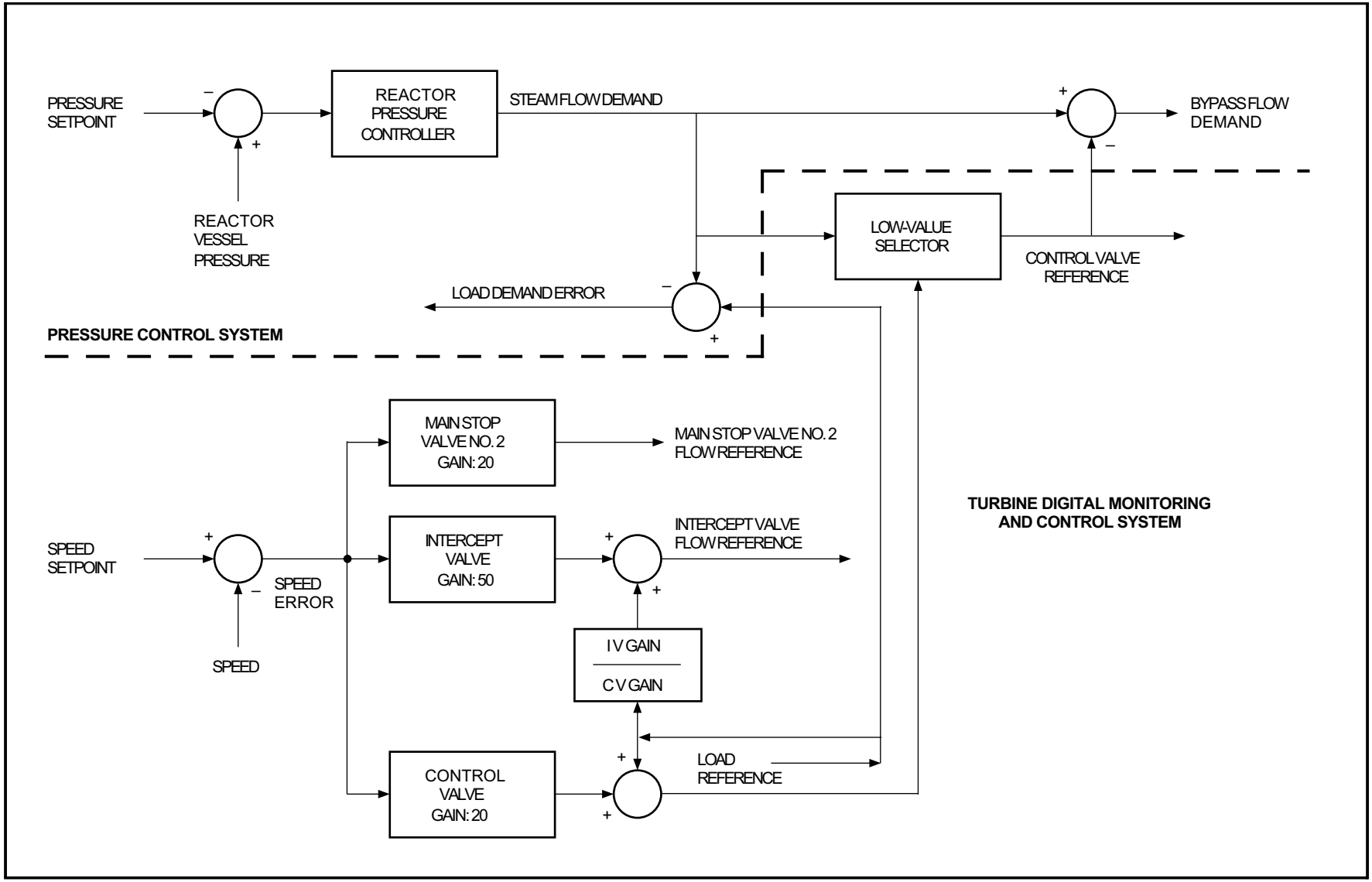

Figure 20.3.10-1 Simplified Functional Control Diagram of Turbine Digital Control and Monitoring System (Typical of One of Three Channels)

20.3.11 Response to Eleventh RAI — Reference 11

Question 281.15

In a letter from Thomas E. Murley, NRR, to Ricardo Artigas, G.E. dated August 7, 1987, the staff provided the ABWR licensing review bases as well as the scope and content of the ABWR Standard Safety Analysis Report (SSAR). In Section 8.7, Water Chemistry Guidelines, of the referenced letter, it states that G.E. has committed to using BWR Owners Group water chemistry guidelines. These guidelines are necessary to maintain proper water chemistry in BWR cooling systems to prevent intergranular stress corrosion cracking of austenitic stainless steel piping and components and to minimize corrosion and erosion/corrosion-induced piping wall thinning in single-phase and two-phase high energy carbon steel piping. Water chemistry is also important for the minimization of plant radiation levels due to activated corrosion products. Section 10.4.6.3 of the ABWR indicates that the condensate cleanup system complies with Regulatory Guide 1.56. Section 10.4 should indicate that the system meets the guidelines published in:

> EPRI NP-4947-SR, BWR Hydrogen Water Chemistry Guidelines 1987 Revision, dated October 1988.
>
> EPRI NP-5283-SR-A, Guidelines for Permanent BWR Hydrogen Water Chemistry-1987 Revision, dated September 1987.

The use of zinc injection as a means of controlling BWR radiation-field build-up should be discussed.

Response 281.15

A new Subsection 9.3.9 has been added to describe the hydrogen addition system. Revised Subsection 5.2.3 indicates that the guidelines in EPRI NP-4947-SR, BWR Hydrogen Water Chemistry Guidelines 1987 Revision, October 1988 and EPRI NP-5283-SR-A, Guidelines for Permanent BWR Hydrogen Water Chemistry-1987 Revision, September 1987 will be met. This is also indicated in new Subsection 9.3.9.

Subsection 9.3.11 has been added to describe the zinc addition system.

Question 281.16

In Section 10.4.6.3, the ABWR SSAR indicates that the condensate cleanup system removes some radioactive material, activated corrosion products and fission products that are carried over from the reactor. More important functions involve removal of condensate system corrosion products, and possible impurities from condenser leakage to assure meeting BWR Hydrogen Water Chemistry Guidelines. This should be discussed.

Response 281.16

Subsection 5.2.3.2.2.3 has been modified to discuss the removal of condensate system corrosion and possible impurities from condenser leakage.

Question 281.17
The condensate (Figure 10.4-4) and feedwater (Figure 10.4-7) system diagrams do not indicate the location of the oxygen injection into the condensate system and hydrogen and zinc oxide into the feedwater system. This information should be provided.

Response 281.17
The location of oxygen addition for the condensate system is in Subsection 9.3.10. The location of hydrogen addition to the feedwater system will be shown in Subsection 9.3.9. The location of zinc addition to the feedwater system is in Subsection 9.3.11.

Question 281.18
Section 10.4 does not discuss design improvements involving material selection, water chemistry, system temperatures, piping design and hydrodynamic conditions that are necessary to control erosion/corrosion. The EPRI CHECMATE or other erosion/corrosion computer codes may be useful design tools to minimize wall thinning due to erosion/corrosion-corrosion. The ABWR SSAR should discuss design considerations to minimize erosion/corrosion and procedures and administrative controls to assure that the structural integrity of single-phase and two-phase high-energy carbon steel piping system is maintained.

Response 281.18
A discussion on the control of erosion-corrosion of carbon steel has been added to Subsection 5.2.3.2.2.3.

Question 420.123
SSAR 15B.4 describes the essential multiplexing system (EMS) in some detail. SSAR Figure 7A.2-1 states that the design is not limited to this configuration. It is our understanding that the EMS design is still in a preliminary design stage. Is SSAR 15B.4 still accurate and is the design limited to that configuration? (15B4)

Response 420.123
SSAR 15B.4 is an accurate system-level description of EMS and reflects the components described in the EMS design specification and SSLC design specification, and is the chosen system configuration. The exact hardware implementation is not specified for design certification, since potential vendors could accomplish the multiplexing functions in several ways, given the restriction that qualification requirements must be met. However, certain design details to be imposed on such vendors are discussed in the various responses given in Section 7A.2. Hardware and software (“firmware”) requirements down to the module level of the equipment are described.

The EMS design is presently defined to the level of the type of processing components needed to perform the data transmission task. The design requires remote multiplexing units, control room multiplexing units and fiber optic interconnecting links. The bi-directional, dual redundant token ring topology is the chosen configuration for these components, and is the configuration shown in Figure 7A.2-1. However, the multiplexing tasks shown in the figure

could also be accomplished by the same components arranged in a star, bus, or point-to-point architecture (all still using a dual redundant configuration). This part of the design will be determined during the detailed design phase, depending upon the required system speed (data throughput), response time, the vendor's communications protocols, error detection/correction methods, and available hardware/software designs.

GE believes that specifying the exact EMS configuration at the design certification stage could skew competitive bidding for potential vendors of the equipment. The system requirements imposed on the multiplexed safety system design (e.g., single failure proof, signal isolation, 2-out-of-4 system logic, bypassing of failed components, self-test, easy repair, periodic surveillance, highly reliable materials, verification and validation of software, and integration testing) are sufficient to provide a qualified design.

Question 420.124

The FMEA submitted in SSAR 15B.4 is inadequate for a safety evaluation supporting the design certification. The FMEA appears to the staff to be oversimplified with one line item each for component failures and does not address potential software complications. The staff requests clarification of how this FMEA was developed given that the system design has not been finalized. The staff also believes that software failures need to be evaluated. The failure modes investigated should include, as a minimum, stall, runaway, lockup, interruption/restoration, clock and timing faults, counter overflow, missing/corrupt data, and effects of hardware faults on software. (15B4)

Response 420.124

Definition of "level of detail" for design certification is presently undergoing review with the Staff. A full response to this question will be submitted following the results of that review. However, the specific failure modes of stall, interruption/restoration and timing faults were addressed in the responses to Questions 420.53 and 420.54.

Question 420.125

This section provided additional clarification of the intended use of the remote shutdown system. The degree of independence and isolation from the Safety System Logic and Control (SSLC) and EMS are not clear. Is it intended in the SSAR to take credit for the RSS if there is a total loss of EMS? (7.4.1.4)

Response 420.125

The remote shutdown system (RSS) is totally separate and independent from the SSLC and EMS in that it is "hard wired" and does not have any multiplexed signal interfaces.

The EMS consists of four independent and separate divisions. Therefore, a total loss of all four divisions of EMS is highly unlikely, and could only be attributed to common-mode failure (See response to Question 420.127). The extensive V&V steps which will be performed in the EMS development should make the possibility of a common-mode failure almost negligible. However, the RSS will provide an additional degree of protection from common-mode failures

by providing an independent means of actuating core cooling functions diverse from both the EMS and the plant main control room.

Reactor scram functions would most likely occur directly as a result of a postulated common-mode EMS failure, because of the "failsafe" design of the reactor protection system (i.e., loss of signals coming from EMS would cause scram). However, the standby liquid control (SLC) system is also available to shut down the reactor because it, too, is "hard wired" and does not interface with the EMS. The SLC is discussed in Subsections 7.4.1.2 and 7.4.2.2.

Both the RSS and SLC are identified as diverse mitigating systems for such scenarios in 7A.7 [Items 7A.5(4) and 7A.6(4)].

Question 420.126

Compared with GESSAR II, the ABWR has significantly reduced the number of input sensors by use of sharing sensors. Provide a bases as to why this does not increase potential vulnerability to common mode failures by reducing sensor diversity.(7A-7)

Response 420.126

Sensor diversity is not compromised by the reduction of instruments, because each of the diverse RPV parameters monitored for the GESSAR II design is still represented in the ABWR. Only the quantity of similar instruments monitoring a given parameter is reduced.

Generally, the reduction in sensors does not necessarily degrade reliability or availability. In fact, simpler systems are usually more reliable. When additional components are used redundantly in a system to improve reliability, a point is reached where the system reliability is dominated by common-cause failure, and additional redundancies add little, if any, improvement in system reliability. In the early stages of the ABWR design (before the instrument reduction program), the reliability of ECCS initiation was limited (in the analysis) by five common-cause interdivisional sensor miscalibration error probabilities. Following the instrument reduction program, there were only three groups of sensors subject to such probabilities. This reduction in common-cause miscalibration errors is because there are less sensors, and the sensors are shared.

Sharing of sensors does raise the possibility of common-cause sensor miscalibration error between safety functions. However, for the limiting-risk case, where low RPV water level is the sole sensed initiation condition, reactor trip and ECCS initiation have different sets and types of sensors. ECCS is initiated by two sets of wide-range water level sensors and RPS is initiated by a separate set of narrow-range sensors. With proper maintenance procedures and special precautions, the possibility of common-cause miscalibration resulting in loss of automatic initiation of both safety functions is very remote.

There is sharing of drywell pressure sensors between functions, but the primary purpose of these sensors is to sense increased drywell pressure resulting from a loss-of-coolant accident,

and LOCAs are a very small contributor to core damage frequency or risk. The RPS and ECCS have separate trip units.

The same reactor pressure sensors are used for RPS and low-pressure ECCS permissive signals, but again, there are separate trip units that are calibrated separately. A common-cause failure of the RPV pressure sensing function would have very little effect on core damage frequency.

In the ABWR design, the 2-out-of-4 logic utilized in the GESSAR II RPS has been expanded to include all of the ESF systems as well. Thus, where ESF systems could tolerate any single instrument failure in the GESSAR II design, they can now tolerate any two instrument failures in the ABWR design. In other words, failure of 3 sensors is required to disable the signal in the ABWR, whereas failure of 2 sensors was sufficient in the GESSAR II design. Therefore, from a multiple-failure point of view, the ABWR has better protection compared to the GESSAR II design.

Question 420.127

In general, the applicant should provide a clear presentation of how the ABWR with common software modules for any functions (including SSLC logic self-test programs) conforms with IEEE 279-1971 and is at least as single failure proof as GESSAR II. The discussion of shared sensors in 7A-7 does not address potential common mode software failures which may be capable of defeating the diverse parameters. Additionally, the applicant should address why diversity of software should not be a requirement to maintain system diversity. (7)

Response 420.127

The complete independence of the SSLC self-test program is discussed in the revised Subsection 7.1.2.1.6(6) [See response Question 420.19].

Each of the four electrical divisions has its own independent hardware and software. Software “modules” might be construed as “common” only to the extent that each of the independent and redundant hardware modules are similarly programmed in firmware before shipment.

With regard to single-failure, the SSLC trip logic has inter-divisional fiber-optic links to facilitate the 2/4 coincident voting capability. However, such links are unidirectional and their only failure mechanism is an erroneous logic signal to the voting processor. The remaining channels would revert to 1/3 (unbypassed) or 2/3 voting depending on the state of the logical failure. This is the same affect as any other failure within a given channel and is consistent with the single failure criteria defined in IEEE Standards 279, 603 and 379. With the full 4-divisional any-two-out-of-four logic configuration inherent for virtually all safety systems, the ABWR can actually withstand multiple failures in more postulated scenarios than could the GESSAR II design. Therefore, it is more “single failure proof” than GESSAR II.

Regarding postulated common-mode software failure, please review Appendix 7A.7, and the responses to Questions 420.125 and 420.126, which are closely related to this Question. These describe the increased reliability of the 2/4 logic over previous designs, the extensive V&V

program to prevent common-mode failure, and the diverse SLC and RSS systems to mitigate consequences of such failures. The reasons why software diversity is not necessary, and could even be detrimental, are summarized as follows:

(1) The software is developed and documented in accordance with the NRC approved Nuclear Energy Group Boiling Water Reactor Quality Assurance Program. As described in Appendix 7A, the design methodology meets the requirements of Regulatory Guide 1.152, including all the necessary reviews, verification, testing, etc.

(2) The SSLC is actually governed by firmware that has been verified by the V&V program. This firmware can only be burned in at the factory prior to shipment. It is not possible to make program manipulations in the field which could result in a higher probability of common-cause failures.

(3) The SSLC is made up of four independent divisions, each having its own individual and independent microprocessors. The software (firmware) is thus distributed among separated processing hardware. The system is not dependent on a common central processor.

(4) Each division is independently controlled by its own timing system which is not synchronized with other divisions. Therefore, unlikely common-mode failures would be even less likely to occur at the same instant, thus initiating an inadvertent synchronized response.

(5) Each individual microprocessor module is sufficiently simple that it can be verified and validated with great confidence prior to shipment from the factory. Diverse programs would complicate verification and validation activities making them much more costly and difficult to manage. For example, software diversity would require working the bugs out of up to four different system programs. Such cost increases could defeat the potential savings from applying software-based systems.

(6) System self-test runs as a background task in each SSLC logic processor. The operating system or executive program for each processor schedules self-test differently depending upon what other tasks are being processed. Thus, self-test is independent and unsychronized in the four divisions. In addition, both hardware and software watch-dog timers alert the operator to inoperative failures so mitigative action can be taken. Multi-divisional failures in SSLC or EMUX would cause scram directly because of the fail-safe (loss of signal = scram) design of the RPS.

(7) Manual diverse backup systems (SLC and RSS) are provided for critical functions of reactor shut-down and core cooling. Manual “hard-wired” scram is provided for reactor trip. This provides additional defense-in-depth despite high reliability of qualified safety-related hardware/software equipment.

(8) Although the probability of common-cause failures of multiple divisions is reduced by utilizing diverse firmware, the probability of individual failures is increased due to the increased numbers of diverse paths over which postulated failures could occur. In addition, diverse firmware curtails the benefits of standardization in control and instrumentation equipment.

(9) As summarized in Appendix 7A, hardware diversity principles are incorporated at both the signal and system levels similar to operating BWRs and GESSAR II. The ABWR fully meets the intent of NUREG-0493, "A Defense-in-Depth and Diversity Assessment of the Resar-414 Integrated Protection System", May 1985.

Question 420.128

Will software be used to isolate data? If so, what are the design and qualification criteria that are to be applied? Are there any systems which have non-Class 1E software such as keyboard or display control software that interface with the Class-1E systems? Are there any interface with the Class-1E systems which receive inputs from non-Class 1E systems or other channels of 1E systems? (7A.7)

Response 420.128

The following cases are presented to illustrate situations where software may be used to isolate data between Class 1E and non-class 1E system interfaces:

(1) System Level

(a) **Non-Class 1E to Class 1E**: In general, transfer of data from non-Class 1E systems to Class 1E systems is not permitted. All plant sensors and other inputs to safety systems, such as contact closures from relays and manual control switches, that are connected to the Essential Multiplexing System (EMS) or directly to safety system logic must be Class 1E.

A few situations require data from a non-safety-related system. In these cases, only qualified, Class 1E devices shall be used to acquire and transmit the data, using electrical and physical isolation as required (typical applications are main turbine and control rod drive). An analysis must be performed to confirm that failure of the device or supporting structures will not affect the safety systems or EMS.

Electronic devices such as touch panels used for software-based safety system controls must also be Class 1E.

(b) **Class 1E to Non-Class 1E**: Transfer of data from Class 1E systems to non-Class 1E systems is permitted with appropriate hardware and software isolation. Typical applications are safety system outputs to the Performance Monitoring and Control System (PMCS); i.e., output signals used for status displays, annunciator alarms, and computer logging. Other applications are the

scram-following outputs from the Reactor Protection System (RPS) to the Rod Control & Information System (RC&IS) and recirculation pump trip outputs from RPS to the Recirculation Flow Control System. These outputs will be transmitted over an isolating medium (in general, fiber optic data links) to PMCS or the other non-safety systems.

The safety system equipment shall broadcast its data to the non-safety systems with little or no control signal handshaking. No interrupts shall be used by the non-safety systems to request data from the safety systems. No hardware or software failure on the non-safety side shall affect the safety system side; i.e., safety-critical functions shall not be inhibited. Non-safety-related software shall not affect safety-related software, causing it to fail into a non-safe state or causing an unwanted transient response.

Software for data transfer that resides in the safety system equipment shall be written and tested as safety-related code. The code shall be verified and validated under the same V&V program as the other portions of software written for safety functions, thus conforming to Regulatory Guide 1.152.

(c) **Class 1E to Class 1E:** Data transfer between multiple channels of Class 1E systems or between different Class 1E systems is permitted, except that the essential multiplexing systems in multiple channels shall not directly communicate with each other. All permitted communications shall be over fiber optic data links for signal isolation. A hardware or software failure in either channel shall not affect the other channel's normal software performance. All data transfer shall be under the control of error detection/correction software at both the transmitting and receiving ends. Communication protocols shall employ parity checking, checksum, CRC or some combination of these methods in addition to reasonableness, limits, and bounds checking of transferred data. An appropriate trip or warning alarm shall be generated on communication failure if automatic recovery within time limits is not possible. All safety-related software shall be developed under the guidelines of Regulatory Guide 1.152.

(2) Equipment Level

(a) **Keyboard or Keypad Inputs:** Individual logic processing instruments that implement microprocessor-based, software-controlled safety functions will allow technician access (by administrative control, using key access or passwords) to certain calibration and test functions. However, since safety equipment control programs are in read-only memory (ROM), the basic safety-critical functions cannot be changed even when calibration is performed.

Keypad input shall not affect any safety-related signal path. However, some setpoints may be changeable in the field (under administrative control) because of varying plant conditions. Gaining access to setpoint, calibration or test functions shall automatically cause the equipment to go off-line and cause the affected system to be placed in a bypass condition or to go off-line in the appropriate tripped or untripped state, so that the system remains in a safe state.

(b) **Front Panel Displays:** Safety-related data for local display shall be sent via isolated paths to separate display processors. There shall be no interaction between display software and safety-critical software. For example, failure of a handshaking control signal during data transfer shall not affect normal data flow in safety-critical software. No data shall be transferred from the display processor to the safety-related portions of the hardware or software. The entire instrument, including both the safety function processor and the display processor and associated software, shall be qualified as Class 1E, nuclear safety-related.

Question 420.129

List those systems or major components in the I&C design area for which the design is not complete to the "purchase specification" level.

Response 420.129

Definition of "purchase specification level" for design certification is presently undergoing review with the Staff. A response to this question will be submitted following the results of that review.

Question 420.130

In response to Question 420.63 a MTBF goal of 100,000 hours (11.4 years) is given for the essential multiplexing system. Is this goal for one channel or the complete system? If this goal is for the complete system it appears to the staff that the ABWR can expect to loose control at the control room of many of the safety systems (RPS, RHR, ADS) five or six times over the lifetime of the plant. How does this compare with the reliability/availability of multiple ESF systems in the BWR/5 & 6 design (or GESSAR II)?

Response 420.130

The MTBF goal for the essential multiplexing system (EMS) is 100,000 hours per channel.

Question 420.131

(19.2.3.4) Are multiplexer and software failures included in these systems interactions and common cause failures?

Response 420.131

Response to this Chapter 19 question not part of DCD (See SSAR Subsection 20.3.11).

Question 420.132
(19.3.1.3.1(b)) (Response 420.47) Section 19.3.1.3.1(b) states that "if core cooling is accomplished without the use of an RHR system and the suppression pool cooling begins overheating, the suppression pool cooling mode of the RHR will be initiated by the operator." Is any manual action required prior to 30 minutes?

Response 420.132
Response to this Chapter 19 question not part of DCD (See SSAR Subsection 20.3.11).

Question 420.133
(19.3.1.3.1(c)(i)) This section describes the MSIV closure sequence with the most desirable outcome requiring operator action at 30 seconds to insert rods. If that fails the operator must inhibit ADS valves from opening and initiate SLCS within 10 minutes. These activities do not appear to be consistent with a stated design goal of no operator action for 30 minutes following a transient. Provide a description of how the MSIV closure sequence meets the 30 minute rule (6.3.1.1.1) same question for Loss of Offsite Power (LOOP).

Response 420.133
Response to this Chapter 19 question not part of DCD (See SSAR Subsection 20.3.11).

Question 420.134
(19D.3.4) Equipment maintenance or test unavailabilities are taken from GESSAR PRA and are based upon BWR experience. In the past, I&C has been a large contributor to system downtime. How do these systems (RHR, RCIC) unavailability numbers take into account the new multiplexing and microprocessors?

Response 420.134
Response to this Chapter 19 question not part of DCD (See SSAR Subsection 20.3.11).

Question 420.135
(Table 19D.6-10) Provide the justification for a Mean Time to Repair (MTTR) of 4 hours for multiplexers and 30 minutes for ESF logic. Invertors and battery chargers have restoration time given (Table 19A.8) as 48-56 hours. Are the multiplexers designed with all test and maintenance equipment installed?

Response 420.135
Response to this Chapter 19 question not part of DCD (See SSAR Subsection 20.3.11).

Question 420.136
(7A) The staff has reviewed the commitments in the SSAR and has reviewed the available documentation describing the verification and validation plans. To date, the information has been vague, general in nature and lacking in essential detail to demonstrate conformance with ANSI/IEEE 7-4.3.2. Does the applicant intend to enclose the V&V Plan as Appendix B of SSAR Chapter 7 or will the V&V details be left as an interface requirement? The staff required

a formal, structured V&V plan to be in place and implemented early in the software design process.

Response 420.136

Definition of "level of detail" for design certification is presently undergoing review with the Staff. A response to this question will be submitted following the results of that review.

20.3.12 Response to Twelfth RAI — Reference 12

Question 725.62

According to Response 5 of GE's response to previous staff questions, all the Residual Heat Removal (RHR) pumps will start automatically upon receipt of low water level signal or high drywell pressure signal and can be transferred to other operating modes while they are running. Is the transfer of the RHR pump flow from injection mode (referred to "V") to the containment heat removal mode (referred to "W") done automatically without requiring any operator actions? If so, provide discussions regarding modeling aspect of operator actions for the containment heat removal mode of the RHR system. Proprietary information provided under separate cover.

Response 725.62

Response to this Chapter 19 question not part of DCD (See SSAR Subsection 20.3.12).

Question 725.63

For scenario involving vessel isolation event followed by the failure of the High Pressure Core Flooders (HPCF), Reactor Core Isolation Cooling (RCIC) System and RWCU System, and successful vessel depressurization, will both "V" function and "W" functions be required simultaneously for successful core cooling (during the mission time considered) and long-term heat removal? If so, state the minimum trains of the RHR system needed to avoid a core damage.

Response 725.63

Response to this Chapter 19 question not part of DCD (See SSAR Subsection 20.3.12).

Question 725.64

By definition of "Class 2 Sequences," the containment heat removal systems (RHR system) have failed following a transient and a postulated LOCA event. Therefore, provide discussions regarding adequacy of crediting the RHR system (such as fast recovery) for the scenario involving a vessel isolation event followed by the failure of the HPCF system, the RCIC system, and successful vessel depressurization with coolant injection only achievable by the LPFL mode of RHR. If the RHR system can be used (during this scenario) for both "V" and "W" functions, can train A of the RHR system alone perform both "V" and "W" functions to avoid a core damage?

Response 725.64

Response to this Chapter 19 question not part of DCD (See SSAR Subsection 20.3.12).

Question 725.65

The staff notes that the pumping capacity of the RHR pumps of the ABWR design is lower than that of the operating BWR designs. Therefore, provide discussions regarding the modeling adequacy of the RHR system (use of one of three RHR trains to maintain the pool temperature below the heat capacity-temperature limit) for the scenario involving the vessel isolation event

followed by a fail-to-scram event. GE's discussions should include supporting pool temperature calculations, including the assumed amount of heat dump to the pool following the above scenario.

Response 725.65

Response to this Chapter 19 question not part of DCD (See SSAR Subsection 20.3.12).

Question 725.66

The staff believes that a gas turbine-generator (in addition to the three train diesel generator system) added to the ABWR design will reduce the frequency of sequences involving early core damage following a loss of offsite power event with a postulated common mode failure of the diesels. Thus, provide discussions for the following:

(1) What is GE's definition for the black-start capability for the gas turbine-generator?

(2) Will the gas turbine-generator be started automatically?

(3) If a start failure of the gas turbine-generator will occur, can it be started from the main control room?

(4) Does the operator have to decide as to which class IE 4.16kV bus should receive AC power generated by the gas turbine-generator?

(5) Did GE perform a trade-off study involving the benefits of a seismically qualified gas turbine-generator?

(6) What are the assumptions made in quantifying the results provided in Table 19.3-6 of the ABWR PRA (Amendment 9) which includes the impact of adding a gas turbine-generator? In particular, were the initiating event frequencies (such as Be2, Be8, Be0, Te2, Te8, Te0) recalculated by modifying the event tree provided in Figure 19D.4-4? If so, provide these estimates. Also, provide, for the case of adding a gas turbine-generator, similar results provided in Tables 19D.4-1 and 19D.4-3.

Response 725.66

Response to this Chapter 19 question not part of DCD (See SSAR Subsection 20.3.12).

Question 725.67

Provide discussions related to the use of the RCIC system unavailability estimate documented in Table 19D.4-1 (under the column of offsite power event), in the event tree quantification. Also, provide statements related to the consistency of the RCIC system unavailability estimate used for the quantification of the ATWS event tree and the corresponding estimate documented in the Table 19D.4-1.

Response 725.67

Response to this Chapter 19 question not part of DCD (See SSAR Subsection 20.3.12).

Question 725.68

Provide the scientific details of seismic hazard analyses performed for the ABWR Design review and the basis for selection of the seismic hazard curve (Figure 19.4-2). The discussion should include site seismicity characterization of various (five reference sites) sites considered in eastern United States of America, including the combination method used to develop a single enveloping seismicity hazard curve to represent an enveloping site to locate the ABWR design, and the associated uncertainty estimates for the use of a single seismicity hazard curve. The discussion of the site characterization should include critical site parameters such as soil-structure interaction for various sites considered. There are some seismic terms used in GE's seismic risk analysis which are confusing to the staff. What is the parameter used for describing the seismic hazard and fragility? For example, it is variously used to represent as the effective peak ground (Figure 19.4-2) and mean peak ground acceleration (Section 19.4.3.2.1).

Response 725.68

Response to this Chapter 19 question not part of DCD (See SSAR Subsection 20.3.12).

Question 725.69

Provide the ABWR-specific fragility calculations for the following structures and components: Containment, Reactor Building, Main Control Room (including control room suspended ceilings, if any), Reactor Pressure Vessel (RPV) RPV Pedestal, RPV Shroud Support, CRD Guide Tubes, CRD Housings, Fuel Assemblies, Containment Vent System, Passive Flooder, SRV Pipes to Suppression Pool. If generic component fragilities have been used, provide a detailed discussion how the generic component fragilities were assigned. The discussion should include also applicability of the uncertainty estimates due to variations in ABWR design-specific component design may have.

Does the failure mode, "Relay Chattering," applicable to the ABWR design? If so, provide discussions regarding the modeling of electrical equipment (such as breaker) to account for relay chattering effect in fragility quantification. Provide also discussions regarding sequences (such as loss of containment isolation function) that could result from relay chattering failure mode, and method of quantifying such failure modes (including human recovery actions involved, if any).

Provide the details regarding the seismic capacity of the fire protection system (including the valves F005, A, B, C of the AC independent fire water system. Provide also the seismic capacity of small piping (if used) and valves (14 and 22 inches in size) of the containment overpressure relief (COR) system, addressing the failure mode, "Normally open valves fail closed" and including human recovery actions involved, if any.

Response 725.69

Response to this Chapter 19 question not part of DCD (See SSAR Subsection 20.3.12).

Question 725.70

The staff understands that the seismic PRA performed for the ABWR design is limited in nature due to the design stage (FDA). However, our past seismic risk review experience indicates that seismic risk profiles of as-built-ABWR plant in U.S. could be different due to various in construction standards by various architects. Therefore, provide discussions regarding the construction interface requirements such as allocated fragility estimates for all applicable mechanical and electrical component of the ABWR design, as practicable, including the severe-accident design basis and/or goals on which allocation of such fragility estimates will be performed. These discussions should also include consistency between requirements outlined in Electric Power Research Institute (EPRI)—Advanced Light Water Reactor (ALWR) Requirements Document, and design requirements to be proposed to various architects by GE.

Response 725.70

Response to this Chapter 19 question not part of DCD (See SSAR Subsection 20.3.12).

Question 725.71

Provide ABWR-specific layout drawings (in larger size) which show clearly major structures and equipment. Provide also as-designed structural drawings which show the details of the RPV support arrangement, RPV internals arrangement, drywell and the reactor building.

Response 725.71

Response to this Chapter 19 question not part of DCD (See SSAR Subsection 20.3.12).

Question 725.72

Provide a copy of the ABWR PRA seismic input data such as seismic hazard curve and seismic accident sequences applicable to the ABWR design, in the form of a hard copy (tabular forms and boolean equations) as well as a magnetic media. These data are needed to facilitate staff's audit review.

Response 725.72

Response to this Chapter 19 question not part of DCD (See SSAR Subsection 20.3.12).

Question 725.73

The staff believes that the determination of a particular seismic intensity (for risk modeling purposes) at which evacuation scheme at a particular site following a postulated severe-accident will impact greatly the risk estimates (early fatality estimates). Provide discussions regarding the determination of the break point of the seismic intensity (in terms of EPG) at which evacuation were considered impossible for ABWR risk estimation purposes.

Response 725.73

Response to this Chapter 19 question not part of DCD (See SSAR Subsection 20.3.12).

Question 725.74

Our past PRA review experience indicates that fires and internal floods contribute significantly to the overall core damage frequency at nuclear power plants. The staff also believes that, with respect to the ABWR design protection against fires and internal floods, GE will provide significant design improvements to current separation requirements and divisional (redundancy) requirements related to all safety systems and components. Nevertheless, the ABWR PRA (Amendment 9) has not documented the core damage frequency analysis of fires and internal floods. Therefore, provide the results of screening analysis (including the screening criteria) performed for the ABWR design to show that fires (panel fires, transient combustible fire, cable fires) and room-specific floods do not significantly contribute to the overall core damage frequency. Provide also statements regarding consistency between requirements outlined in the ALWR Requirements Document and current ABWR design requirements related to fire protection and flood protection schemes.

Response 725.74

Response to this Chapter 19 question not part of DCD (See SSAR Subsection 20.3.12).

Question 725.75

In developing the fault trees for seismically induced failure of the ECCS, such as HPCF, RCIC, LPCF and RHR (Figures 19I.2-1 through Figure 19I.2-4 of the ABWR PRA), no explicit modeling of the dependence of these ECCS on electric power or service water system was made. Nevertheless, fault trees were developed in Figure 19I.2-6 and Figure 19I.2-7 to depict seismically induced failure of Division 1 service water and seismically induced failure of Division 1 electrical power respectively. Please explain how the latter two fault trees developed for the support system were combined with event tree top events to generate minimal cut sets for seismic core damage sequences.

Response 725.75

Response to this Chapter 19 question not part of DCD (See SSAR Subsection 20.3.12).

Question 725.76

Following loss of offsite power due to seismic events, an important subsequent concern is whether or not emergency power and service water are available. Failure of emergency power (diesels or gas turbine generator) and failure of service water system may be considered as two virtually independent events. In the seismic event tree (Figure 19I.3-1), however, these two events are combined together and treated as a single event treetop event, PW. Please explain how the failure probability of this top event was estimated. Was the gas turbine generator included in evaluating the availability of emergency power?

Response 725.76

Response to this Chapter 19 question not part of DCD (See SSAR Subsection 20.3.12).

Question 725.77
Were random failures of the ECCS, such as HPCF, RCIC, LPCF and RHR, taken into account in the quantifications of seismic core damage frequency? If so, please provide a list of random failure probabilities for the important systems and components used in the quantifications.

Response 725.77
Response to this Chapter 19 question not part of DCD (See SSAR Subsection 20.3.12).

Question 725.78
On page 19.4-11 of the ABWR PRA (second paragraph), it is stated that "Since these fault trees (meaning those shown in Appendix I) are specifically for evaluation of seismically-induced failures, only those components vulnerable to seismic failure are included in the trees." In reality, however, those fault trees also contain basic events (depicted with an "X"), that would not occur as a result of an earthquake. Please explain the contradiction.

Response 725.78
Response to this Chapter 19 question not part of DCD (See SSAR Subsection 20.3.12).

Question 725.79
Please provide justification of considering heat exchanger failure in the RHR and service water fault trees, while ignoring it in the fault trees of RCIC, HPCF and LPCF. 13. In the fault tree developed for service water system (Figure 19I.2-6), the motor-operated valve, WMVS3DH, is considered seismically vulnerable, while three other similar motor-operated valves are considered seismically invulnerable. What is the basis for making such a distinction? In the fault tree depicting seismically induced failures of RCIC (Figure 19I.2-2),three identical basic events are used to denote non-seismic failure of an isolation valve (MOV). Are these three basic events intended for failures of three different isolation valves?

Response 725.79
Response to this Chapter 19 question not part of DCD (See SSAR Subsection 20.3.12).

Question 725.80
Please provide a terse but systematic description of how the Boolean expressions derived from the seismic event trees and fault trees are combined with seismic hazard function, component and structure fragilities and other unavailability data, and integrated to obtain the frequency of individual accident sequences.

Response 725.80
Response to this Chapter 19 question not part of DCD (See SSAR Subsection 20.3.12).

Question 725.81
For ATWS events with failure to initiate SLC, what alternative means are available for injecting boron in order to shut down the reactor? What failure probability was used in the sequence

frequency quantification for the event tree top event, FCTR (flow control/alternate boron), appearing in Figures 19I.3-1, 3-3 and 3-4?

Response 725.81
Response to this Chapter 19 question not part of DCD (See SSAR Subsection 20.3.12).

Question 725.82
The event tree top event, W1, appearing in Figures 19I.3-2, 3-3 and 3-4, is defined to be "at least one RHR." How many trains (1, 2 or 3) of RHR were actually used in the sequence frequency quantifications? Please also list the random failure probability assigned to this event in each figure.

Response 725.82
Response to this Chapter 19 question not part of DCD (See SSAR Subsection 20.3.12).

Question 725.83
In the seismic event tree, Figure 19I.3-1, credit is given to fire water (event tree top event, FA) for the following transient scenarios: (a) station blackout, successful scram, failure of RCIC; (b) station blackout, successful scram and RCIC; and (c) station blackout, failure of scram but successful RCIC. What is the unavailability of fire water system in each case?

Response 725.83
Response to this Chapter 19 question not part of DCD (See SSAR Subsection 20.3.12).

Question 725.84
In the seismic ATWS event tree, Figure 19I.3-3, the last sequence involves failure of SRVs to open following the inception of an Loop ATWS. Please explain why this sequence is classified as Class IC, which, by definition, involves low pressure vessel failure. Please also clarify the description of accident classes for Class IV-1 (ATWS with one injection pump) and Classes IV-2, 3, 5 (ATWS with multiple injection pumps) in connection with the relevant sequence classifications performed in Figure 19I.3-3. What is the basis of choosing 2, 3 or 5?

Response 725.84
Response to this Chapter 19 question not part of DCD (See SSAR Subsection 20.3.12).

Question 725.85
The suppression pool drain accidents due to RHR pipe break are considered to be 00SN, which implies no fission product release. However, if the suppression pool is drained, the passive flooder is not operable, and therefore extensive CCI will continue. Why is this effect not considered in determining the fission product release for this sequence?

Response 725.85
Response to this Chapter 19 question not part of DCD (See SSAR Subsection 20.3.12).

Question 725.86
The firewater availability is considered to be 0.9 for the vessel cooling except for the Class IB-2 accidents, where it is 0.999. The firewater availability for the drywell spray is also assumed to be 0.999 (page 19J.4-1). However, the firewater availability in the internal event analysis was assumed to be 0.9 for vessel cooling and 0.99 for the drywell spray. Why these are substantially more reliable for the seismic events?

Response 725.86
Response to this Chapter 19 question not part of DCD (See SSAR Subsection 20.3.12).

Question 725.87
On page 19J.3-1, it is stated that "ARC" is solely due to firewater. Why then is the "ARC" Yes branch fraction not 0.999 in the CET's (why 0.944)?

Response 725.87
Response to this Chapter 19 question not part of DCD (See SSAR Subsection 20.3.12).

Question 725.88
How are the "CHR" branch fractions evaluated?

Response 725.88
Response to this Chapter 19 question not part of DCD (See SSAR Subsection 20.3.12).

Question 725.89
In Figure 19J.5-7, Sequence 4 was binned as NSRCFSDL. Shouldn't this be binned as OK, since this sequence represents continued core cooling by firewater? (Compare this with Figure 19J.5-6 for Class II.) Why are the "CHR" No and "CC" Yes branch fractions of Class IV not same with those of Classes II?

Response 725.89
Response to this Chapter 19 question not part of DCD (See SSAR Subsection 20.3.12).

Question 725.90
The firewater availability is assumed to be 0.9 for Class IV (Figure 19J.5-7). However, it was stated in the internal event analysis that no credit was taken for the firewater system to prevent core damage for Class IV because the stability of the reactor during an ATWS has not been examined (page 19D.5-10). Please clarify.

Response 725.90
Response to this Chapter 19 question not part of DCD (See SSAR Subsection 20.3.12).

Question 725.91
It appears that the loss of transformer contributes significantly to "loss of core cooling" accidents. Why isn't this considered to be a blackout sequence (IB)? What fraction of Class IA

is due to this scenario and what fraction is due to other causes such as loss of injection pumps or lines, etc.? What is the RHR recovery probability for each of these sequences?

Response 725.91
Response to this Chapter 19 question not part of DCD (See SSAR Subsection 20.3.12).

Question 725.92
It is stated on page 19J.4-1 that the reliability used for the firewater system is also used for the transformer bypass operation. Does the "ARC" Yes branch fraction take this high reliability into consideration?

Response 725.92
Response to this Chapter 19 question not part of DCD (See SSAR Subsection 20.3.12).

Question 725.93
Why is RHR assumed to be lost for the Class IA accidents? (In the internal events CET for Class IA, the RHR availability was 0.99.) Do all accidents in SCET assume loss of power due to loss of transformer and require the bypass of the transformer?

Response 725.93
Response to this Chapter 19 question not part of DCD (See SSAR Subsection 20.3.12).

Question 725.94
Is the loss of the offsite power by seismic events with subsequent failure of onsite power considered to be IB-2? Does Class IB-2 include the loss of power due to loss of transformers? What is the RHR recovery probability for each of these sequences?

Response 725.94
Response to this Chapter 19 question not part of DCD (See SSAR Subsection 20.3.12).

20.3.13 Response to Thirteenth RAI — Reference 13

Question 430.154

All figures in ABWR SSAR Section 11.2 except Figures 11.2-2a and 11.2-2b are not legible. Provide enlarged-size legible versions of the figures. (11.2). Proprietary information provided under separate cover.

Response 430.154

Enlarged-size versions of these figures were provided under separate cover.

Question 430.155

For each liquid radwaste subsystem, provide the available margin for processing surge flows by comparing the expected normal daily waste generation rate with the design flow rate for the limiting processing equipment. (11.2)

Response 430.155

The data in the table below show that each liquid radwaste system is able to process the normal waste generation rate. Each liquid radwaste system also has available margin for processing surge flows.

Capability of Liquid Radwaste Subsystems to Process Normal Expected Wastes

Subsystem	Capacity of Limiting Processing Equipment	Normal Waste Generation Rate
LCW	720 m^3 /day	55 m^3 /day
HCW	144 m^3 /day	15 m^3 /day
DW	288 m^3 /day	31.3 m^3 /day
CONW	This subsystem is sized to collect normal wastes for sixty days and to transfer them to HCW within one hour.	

Question 430.156

Provide specific information detailing how the liquid radwaste systems meet Regulatory Guide 1.143 guidelines (C.1.2.1 through C.1.2.5) and C.4.1 through C.4.5. Provide layout diagrams as necessary. Describe the indications provided to the operator that a transfer from one storage tank to another (the design basis states that upon high level signals, inputs are automatically routed to a parallel tank, ABWR SSAR Section 11.2.1.2.) has occurred.

Response 430.156

Response to this question is provided in revised Subsection 11.2.1.2.

Question 430.157

Provide information on the following items for the liquid radwaste system:

Question 430.157(1)

Reactor coolant activity (RCA) fraction for each substream of the low conductivity waste (LCW) and high conductivity waste (HCW) streams and the effective RCA fractions for the LCW and HCW streams. Integrate expected average daily liquid radwaste inputs due to generation of chemical wastes, ultrasonic resin cleaning, cleanup phase separator decant backwash, and unique design features of the ABWR with other inputs applicable to the LCW and HCW streams. Provide the total expected average daily input to the LCW and HCW streams. Note that ABWR SSAR Table 11.2-3 is incomplete. Some of the values for wastes generated given in the table are significantly lower than those given in the report ANSI/ANS-55.6 or NUREG-0016, Rev. 1. The values given in these reports for BWRs may be used but some minor adjustments for the ABWR design may be necessary (for example, drywell equipment drain input of 3400 gallons per day (gpd) which includes 2200 gpd due to recirculation pump seal leakage may require adjustment for the ABWR design). Also, define the terms CUW and CF mentioned in Table 11.2-3.

Response 430.157 (1)

The reactor coolant activity (RCA) fraction for each substream of the LCW and HCW are in the following tables.

LCW Activity

Area	Drain Source	Activity*	Drain Volume m^3/day
Drywell	Steam valve seal leakage	R	1.5
	D/W cooler drain	R	2.9
	Others	R	5.6
Reactor buildng	Steam valve seal leakage	R x 0.1	1.5
	Sampling drain	R x 0.1	4.3
	CRD pump seal drain	R x 0.1	0.2
	Others	R x 0.1	9.0
Turbine building	Sampling drain	R x 0.001	2.7
	Others	R x 0.001	12.3

LCW Activity

Area	Drain Source	Activity*	Drain Volume m^3/day
Radwaste building	Sampling drain	R x 0.1	0.05
	Others	R x 0.1	4.95
Others		R x 0.1	10.0

* R = specific activity of reactor water

HCW Activity

Area	Drain Source	Activity*	Drain Volume m^3/day
Reactor building	Floor drain	R x 0.01	5
Turbine building	Same	Same	5
Service building	Same	Same	2
Radwaste building	Same	Same	3

* R = specific activity of reactor water

Chemical wastes are expected as follows:

Floor drain	0.065 m^3/day
Laboratory drain	0.01 m^3/day

Condensate from solidification system	0.026 m^3/day
Total	0.101 m^3/day

Some values are not included in Table 11.2-3 because they are for operations that will be infrequently performed in the ABWR. A comparison was made between the values in Table 11.2-3, the estimated wastes for the ABWR, and the values for previous BWR plants in NUREG-0016, Rev. 1, which was prepared in 1979. There are five major design improvements in the ABWR that will reduce the amount of liquid wastes from those observed in older BWR plants. These improvements are:

(1) There are no recirculation pumps or valves. There will be no leaks from these components.

(2) There is no URC in the ABWR.

(3) Regeneration of the condensate demineralizers will not be performed. NUREG-0016, Rev. 1, recommended complete resin regeneration, which produced a large volume of waste, every 3.5 days. The resin will be replaced when necessary. Titanium-tubed condensers have been virtually leak-free. Also, the use of condensate hollow fiber filters before the condensate demineralizers have reduced the amount of insoluble solids which come into contact with the resin. As a result, it is expected that resin replacement will be less than once per year.

(4) The condensate hollow fiber filters will not require frequent backwashing. Data from operating plants have shown that typical backwashing frequency is less than once per month.

(5) Hollow fiber filters are also used in the LCW subsystem. They require less backwash water than the precoat filters previously used.

Decanting of the CUW phase separator is an infrequent event. It is expected to occur once each six months with an expected volume of 68 m^3. The LCW subsystem can process this volume in addition to the other wastes.

The components of the liquid radwaste system are sized based on processing the maximum daily volume within 24 hours. This criteria is more conservative than basing the sizing upon normal expected waste volumes.

In Table 11.2-3, “CUW” means the reactor water cleanup system and “CF” means the condensate treatment system filters.

Question 430.157(2)

Holdup times associated with collection and processing of the LCW and HCW streams; holdup time associated with discharge of the HCW stream.

Response 430.157 (2)

Holdup times have not been used to calculate the radioactivity in the liquid discharges. The text of Section 11.2 has been changed according.

Question 430.157(3)

Capacities of all tanks, including sample tanks (in gallons) and processing equipment (in gpm) considered in calculating holdup times for the LCW and HCW streams. Include applicable discharge pump flow rate. State whether or not sample tanks are shared.

Response 430.157 (3)

The capacities of the tanks, pumps and other components of the liquid radwaste subsystems are in the following tables.

Component	Volume or Process Flow Rate
LCW System	
LCW Collector Tanks (two)	430 m^3/tank
LCW Hollow Fiber Filter (two)	15 m^3/h/unit
LCW Demineralizer (one)	30 m^3/h
LCW Backup Demineralizer (one)	36 m^3/h
LCW Sample Tanks (two)	430 m^3/tank
RW/B LCW Sump	4 m^3
RW/B LCW Sump Pumps (two)	10 m^3/h/unit
LCW Collector Pumps (two)	220 m^3/h/unit
LCW Sample Pumps (two)	220 m^3/h/unit
HCW System	
HCW Collector Tanks (two)	45 m^3/tank
HCW Evaporators (two)	3.0 m^3/h/unit
HCW Demineralizer	6.0 m^3/h

Component	Volume or Process Flow Rate
HCW Distillate Tank	16 m^3
HCW Collector Pumps (two)	60 m^3/h/unit
HCW Distillate Pumps (two)	30 m^3/h/unit
HCW Evaporator Recirculation Pumps (two)	600 m^3/h/unit
RW/B HCW Sump	4 m^3
RW/B Sump Pump (two)	10 m^3/h/unit
Waste Sludge System	
CUW Backwash Receiver Tank	60 m^3
CF Backwash Receiving Tank	60 m^3
CUW Phase Separator (two)	100 m^3/unit
Spent Resin Storage Tank	50 m^3
CUW Backwashing Receiving Pump (two)	120 m^3/h/unit
CF Backwashing Receiving Pump (two)	120 m^3/h/unit
Decant Pump (two)	10 m^3/h/unit
Slurry Recirculation Pump (two)	200 m^3/h/unit
Sludge Pump (two)	10 m^3/h/unit
Spent Resin Slurry Pump (two)	100 m^3/h/unit
Concentarted Waste System	
CONW Liquid Waste Tank (two)	16 m^3/tank
CONW Liquid Waste Pump (two)	32 m^3/h/unit

Pump Discharge Flow Rate

Pump	Discharge Flow Rate (m^3/h)	Process Flow Dia. Stream No.
LCW Collector Pumps (two)	30	5
LCW Sample Pumps (two)	40	9
HCW Collector Pumps (two)	6	26
HCW Distillate Pumps (two)	6	29

The LCW Sample Tanks are shared by both the LCW and HCW systems.

Question 430.157(4)

Clarify how the liquid radwaste system has adequate margin to preclude liquid radwaste discharge even under a wide variety of anticipated operational occurrences.

Response 430.157 (4)

The liquid radwaste subsystems have ample capacity to process the maximum daily generation rate of liquid wastes as shown in the table below:

Radwaste Subsystem	Process Flow Rate	Maximum Daily Generation Rate	Hours to Process Max. Daily Rate
LCW	30 m^3/h	615 m^3/day	20.5 h
HCW	6 m^3/h	65 m^3/day	10.8 h
DW	12 m^3/h	79 m^3/day	6.7 h
CONW	System is designed to collect wastes for 60 days.		

Thus, it is concluded that the above subsystems can process the maximum expected wastes.

Question 430.158

For the detergent waste subsystems, provide the capacities of all tanks, flow rates of processing equipment and pumps. Clarify rain sample tanks. (ABWR SSAR Section 11.2.1.2 states that these wastes are discharged from the hot shower drain receiver tank whereas Section 11.2.3.1 states that these are discharged from the shower drain sample tanks.) Also, clarify whether the hot shower drain receiver tank has adequate capacity to collect the high volume of detergent wastes (31.3 cubic meters per day - Table 11.2-3) and whether storm drain(s) is also an input to the tank (ABWR SSAR Section 11.2.2.3 does not include storm drain; however, Table 11.2-3 shows a volume input of 20 meters/day from this source). (11.2)

Response 430.158

The detergent waste subsystem has the following tanks:

One HSD receiver tank	33 m^3
Two HSD sample tanks	210 m^3 each.

It also has the following:

Two HSD receiver pumps	25 m^3/h each
Two HSD sample pumps	80 m^3/h each
Two HSD filters	6 m^3/h each.

Water is discharged from this system from the HSD sample tanks, not from the HSD shower drain receiver tank. Subsection 11.2.1.2 has been revised.

Each HSD receiver tank is capable of collecting the normal volume of detergent wastes, 11.3 m^3/day. The storm drains listed in Table 11.2-3 are not rain or snow. This subsystem collects waste liquids from systems that are normally nonradioactive but may, under certain conditions, come into contact with radioactive liquids. The storm drains are sent to the HSD sample tanks from which it is discharged if desired. If needed, the storm drain water may be treated by the HSD filters prior to discharge.

Question 430.159

ABWR SSAR Tables 11.2-4 and 11.2-5 do not indicate that detergent wastes, all of which are expected to be released untreated (note that the staff does not give any credit for radioactivity removal due to processing through a detergent filter), have been included in the table. NUREG-0016, Rev 1 has calculated a total of 0.09 ci/yr for the untreated release of detergent wastes. Revise these tables to include the untreated release of detergent wastes. Also, include the expected tritium release via the liquid effluents. Further, provide the basis for releasing the detergent waste via the liquid pathway untreated. (11.2)

Response 430.159

Detergent wastes will be discharged after filtration. However, during periods of high laundry use, such as during outages, excess laundry above the capacity of the plant laundry will be sent offsite for processing by a licensed vendor. By administrative control, the amount of activity from both detergent wastes and from the LCW sample tank will be limited so that the total annual liquid releases will not exceed 3.7 GBq/year.

Tables 11.2-4 and 11.2-5 have been deleted. The information concerning annual average liquid releases will is provided in new Table 12.2-22.

Question 430.160

Limiting value of 200 gpm for discharge of liquid radwaste to the discharge canal in conjunction with minimum dilution volume of 1500 gpm gives only a low minimum dilution factor of 7.5 for a critical liquid pathway exposure i.e., fishing in the discharge canal. The above compares with a dilution factor of 200 and much above that quoted by a number of operating BWRs in the periodic effluent reports. With the expected release of high conductivity liquid wastes (can be up to 10 percent of the total high conductivity wastes) and untreated detergent wastes, it is not clear whether the dilution factor of 7.5 will be adequate to ensure compliance with 10CFR50, Appendix I dose limits for liquid pathways, even if an additional dilution factor of 5 is included between the canal and subsequent consumption or recreational activity involving liquid effluent. Also, it is not clear whether the low dilution factor will make it difficult to complete monitoring prior to release of liquid radwaste. Address the above concerns by either decreasing the limiting value of liquid radwaste discharge rate or increasing the minimum dilution volume or doing both of the above. (11.2)

Response 430.160

The annual average liquid releases and the liquid pathway dose analyses which will be in revised Tables 12.2-22 and 12.2-23 (attached). They were calculated assuming release of up to 1.85 GBq/yr of detergent waste and 1.85 GBq/yr of treated HCW. A dilution flow of 341 m^3/h for evaluation of compliance with 10CFR20 and an additional dilution by a factor of ten in the discharge canal for dose evaluations were used. Table 12.2-22 and 12.2-23 show that the discharges are in compliance with 10CFR50 Part 50, Appendix I.

Question 430.161

Clarify whether the seismic Category I steel-lined radwaste building substructure (see response to Question No. 430.58 dated March 7, 1989) includes the base mat and outside walls to a height sufficient to contain the maximum liquid inventory expected to be in the building. (11.2)

Response 430.161

The seismic Category I steel-lined radwaste building substructure includes the base mat and outside walls to a height sufficient to contain the maximum liquid inventory expected to be in the building.

Question 430.162

Resulatory Guide 1.143, Position C.2, provides that, for a system with a design pressure of less than 1.5 atmosphere absolute, the supports for the charcoal tanks and the buildings housing there tanks meet the seismic design criteria of Position C.5. Clarify whether the charcoal adsorber vault meets these requirements. Include a discussion of how the gaseous waste management system meets Position C.5 guidance. (11.3)

Response 430.162

Since the offgas system normally operates near ambient pressure, the Position C.2 criteria apply to the tank support elements and the building housing the tanks. The charcoal adsorber vault meets these requirements as described in the second paragraph of Subsection 11.3.4.6. A

discussion of how the offgas system meets Position C.5 guidance is provided in the first paragraph of Subsection 11.3.4.6.

Question 430.163

Figures 11.3-1 and 11.3-2 have been reduced so that portions of each of these figures are not legible. Please provide legible versions of these figures. (11.3)

Response 430.163

Enlarged-sized versions of these figures have been provided under separate cover.

Question 430.164

The combination of the design dewpoint (30 F, ABWR SSAR Section 11.3.4.2.7), the system operating temperature (100 F, ABWR SSAR Section 11.3.3.1) and the mass of charcoal (12 tons, ABWR SSAR Table 11.3-2) gives significantly lower dynamic adsorption coefficients for krypton and xenon, and consequently much lower holdup times for these gases in the offgas processing system than those given in ABWR SSAR Section 11.3.2. Correct the values for adsorption coefficients and the holdup times as appropriate. Note that the staff calculates the holdup times using the expression given in NUREG-0016, Rev. 1 (page 2-35). Also, note that the above parametric values will result in substantially higher noble gas releases to the environment (e.g., about 10^5 ci/yr for Xe-133) from the offgas treatment system. Provide the dynamic adsorption coefficient and holdup time for Argon-41 also. [In this context, the staff notes that GE provided the same holdup times for xenon and krypton, i.e., 42 days and 46 hours respectively, in the SAR for GESSAR-II, which uses a refrigerated charcoal delay bed system containing 24.6 tons of activated charcoal.] Additionally, justify the apparent significant reduction in holdup time for noble gases for an advanced design such as ABWR.

Response 430.164

The charcoal beds contain 113.4 Mg of charcoal (see markup of Table 11.3-2) at 35±3°C. However, a 10% margin is assumed and the releases are conservatively based on 112 Mg. The dewpoint of the input gas is approximately 18.3°C (RH approximately 30%) which yields a delay as specified at 42 days for Xenon and 46 hours for Krypton at the specified flow of 48.2 m^3/h.

Question 430.165

Describe provisions to control leakage paths to the environment after a hydrogen detonation within the gaseous waste management system.

Response 430.165

There are no leakage paths except as shown on the P&ID (Figure 11.3-2) following a H_2/O_2 detonation because the system is designed to be detonation resistant according to the acceptable design rules of ANSI/ANS-55.4, Appendix C.

Question 430.166

Provide information on the following items for the gaseous waste management system:

Question 430.166A

Hydrogen concentration instrumentation and associated alarm provisions. Discuss how the ABWR instrumentation conforms with applicable guidelines of SRP 11.3, Acceptance Criterion II.B.6, pages 11.3-4 through 11.3-6. Also, discuss how the offgas system design complies with GDC 3 as it relates to providing protection to the system from the effects of an explosive mixture of hydrogen and oxygen.

Response 430.166A

The system is provided with redundant non-igniting detonation resistant H_2 analyzers which indicate H_2 in the range of 1% to 5% and alarm at 2%.

The offgas system is not safety-related and would not fail as a result of a H_2/O_2 mixture detonation.

The system is provided with shutoff valves and gaseous N_2 purge connections to facilitate extinguishment and cooling in the event of a charcoal ignition.

Question 430.166B

Holdup time for off-gasses from the main condenser air ejector off-gas treatment system. The staff notes that GE did not provide a satisfactory response to the above question raised earlier (see GE's response dated March 7, 1989 to Question No. 460.4.7).

Response 430.166B

The estimated transit time from the main condenser to the charcoal beds is 2.5 minutes.

Question 430.166C

Offgas system alarmed process parameters (provide in tabular form).

Response 430.166C

Response to this question is provided in revised Subsection 11.3.4.2 and new Table 11.3-4.

Question 430.166D

Design holdup time for gas vented from the gland seal condenser, iodine partition factor for the condenser, and fraction of radioiodine released through the system vent. Provide expected annual noble gas and iodine releases to the environment (including the basis and rationale) from the turbine gland seal system resulting from use of steam generated from main steam and high pressure heater drain tanks for sealing the turbine gland (see GE's response to Question No. 430.83 dated February 28, 1990.)

Response 430.166D

Because releases from the turbine gland seal system are relatively small, the following estimates are developed using generally conservative process models and parameters that were chosen for their simplicity. These estimates are based on the projected ABWR long term average source term equivalent to 555 MBq of noble gases at 30 minutes decay (see Section

11.1). No credit is taken here for gland sealing by clean steam as the ABWR is not expected to ever require use of this backup process, although it is always readily available.

The following holdup times are estimated:

	Length (m)	Velocity (m/s)	Time (s)
Main steam lines	>100	46	2
Heater drain tank shortest inlet lines (holdup applicable during power operation only)	24	2.4	10
Gland seal inlet and outline lines	37	18	2
Gland seal condenser, vent line	73	6.1	12
Turbine building exhaust vent header and plant stack	183	12	15
Total hold up time during operation above 50% power			~40
Total hold up time during operation below 50% power			~30

Turbine Gland Seal System (TGSS) Releases During Operation Below 50% Power— During operation below 50% power, the turbine gland seals are normally supplied with main steam. The ABWR plant, however, is designed as a baseload plant with a normal operating range from 60 to 100% of rating. Thus, ABWR is to be operated below 50% only during start up and shutdown, for no greater than 1% of the time, or about 90 hours per year.

The yearly average TGSS releases during these periods are estimated as follows:

Noble Gases: Equivalent to the discharge of 3.6E05 kg of main steam after a 30 s holdup (90 hours at 3989 kg/h*).

Iodine: Calculated by the NUREG-0016 Rev. 1 methodology (see pages 2-1 and 2-24) but assuming a capacity factor of 1% instead of 80%.

I-131: 8.1 E-1/80 Ci/year per μCi/g in reactor coolant (2.3 E-3), or 0.85 MBq/year.

I-133: 2.2 E-1/80 Ci/year per μCi/gm in reactor coolant (1.6 E-2), or 1.63 MBq/year.

* Gland Steam Condenser (GSC) inlet steam flowrate. See Ref. Heat Balance Figure 10.1-2.

TGSS Iodine Releases During Operation Above 50% Power—The following estimating bases are used:

Plant power operation load factor	L = 80%
Reactor water isotope concentration	Rx
Reactor boiling partition factor	P_r = 1.5%
Main steam flow rate	M_s= 7.62 E6 kg/h*
Cross around steam moisture scrubbing effectiveness	S_1 = 100%
Heater drain tanks (HDT) flow rate	H_D = 2.4E6 kg/h*
HDT boiling partition factor	P_t = 1%
Gland steam condenser (GSC) moisture scrubbing effectiveness	S_2 = 98%
GSC steam inlet flow rate	G_S = 3.99E3 kg/h*

* See Figure 10.1-2

The TGSS iodine releases are estimated as follows:

HDT iodine input, I_χ

$$I_x = M_s(P_r)(R_x)(S_l)E-3$$

HDT liquid concentration, C_x

$$C_x = \frac{(M_s)(P_r)(R_x)(S_l)}{H_D}$$

$$C_x = \frac{(7.6)(0.015)(R_x)(1)}{2.4} = (0.048R_x)$$

GSC iodine input, G_x

$$G_\chi = G_s(C_x)(P_r)(1000)$$

$$G_\chi = 3.99E3(C_x)(0.01)(1000)$$

$$G_\chi = 3.99(E4)(C_x) = 1.93E3(R_x)$$

TGSS iodine release, T_χ

$$T_\chi = L(8760h/yr)(G_x)(1 - S_2)$$

$$T_\chi = 0.8(8760)(G_x)(0.02)$$

$$T_\chi = 140.2(G_x) = 2.71ES(R_x)$$

For I-133 $R_\chi = T_x = 23MBq/yr$

For I-133 $R_\chi = T_x = 159MBq/yr$

TGSS Noble Gas Releases during Operation above 50%—The releases are again estimated in terms of equivalent amounts of main steam that in the present case, are assumed to be discharged after a 40 second holdup inside the plant.

The TGSS effluents are controlled by the following process:

(1) As main steam expands through the HP turbine and forms moisture, the noble gases generally remain in the vapor phase. Crossaround steam noble gas concentration (C_x) is therefore assumed to increase above that of main steam (M_x), like the inverse rates of the main to crossaround steam mass flow rates determined from Figure 10.1-2 by the following approximation.

$$C_x = \frac{(13.36E6)(M_x)}{11.6E6} = 1.15M_x$$

(2) At the crossaround stage, the drains formed or collected in the heaters and moisture separators dissolve some noble gases and, in the heater drain tanks, these gases are partially released as the drains generate the gland sealing steam. For simplicity and conservatism, the former process (gas dissolution into the drain) is assumed to result in the same vapor to liquid phase mass concentration ratio (B) as the latter process,

gas evolution by slow steaming. Further the xenon "B" coefficient is also applied to Krypton, thus, overestimating the release of the less soluble Kr isotopes but leading to the following general estimates of heater drain tank noble gas parameters.

Input concentration: $C_1 = C_x / B$

where $B = 1.7E3$

based on "Solubilities of Inert Gases in Water", D.N. Himmelblau, J. Chemical Eng. Data 5,10 (1960), and

$$C_1 = 6.8(E6\text{-}4M_x) .$$

Output concentration in the vapor phase Co (based on tank inventory balance)

$$[\text{Input:}5.2E6(C_1)] = [\text{Vapor Phase Output:}2.2E4(Co)] + [\text{Liquid Phase Output:}5.178E6(Co)/B)]$$

$$= 2.5E4Co$$

$$Co = 208C_1 = 0.14M_x .$$

Amount of main steam that, after 40 seconds decay, has an equivalent noble gas content as the TGSS power operation releases

$$L(8760h/yr) = (G_s)(0.14)$$

$$0.8(8760)(8.8E3)(0.14)(4.536E\text{–}01) = 3920\text{metric tons/yr}$$

Total TGSS Yearly Release

- Iodine:

  I 131: 24 MBq/yr

  I 133: 159 MBq/yr

- Noble Gases:

  Kr 85: 260 MBq/yr

  Xe131: 222 MBq/yr

  Xe133: 1.1E05 MBq/yr

Xe135: 2.6E05 MBq/yr

Xe135m: 3.0E05 MBq/yr

Xe138: 9.3E05 MBq/yr

Table 12.2-19 and 12.2-20 have been revised to reflect the above yearly releases.

Question 430.166E

Provisions incorporated to reduce radioactivity releases through the ventilation systems (turbine building, etc.) (e.g., HEPA filter, charcoal adsorbers and their thickness). Discuss how the ABWR systems conform with the guidelines of Regulatory Guide 1.140 with respect to the treatment systems for these release paths.

Response 430.166E

No normal HVAC system requires filters for normal operations to meet 10CFR50 limits on effluent discharge, therefore, Regulatory Guide 1.140 is not applicable to the ABWR design. The secondary containment HVAC isolates on high radiation signal and initiates SGTS. See Appendix 6A for the SGTS conformance to Regulatory Guide 1.52.

Question 430.166F

Release points, effluent flow rates through them and their other characteristics (see NUREG-0016, Rev. 1, Section 4.7, Item 4).

Response 430.166F

Section 11.3 has been expanded to include all plant systems that have a potential to release radioactive materials in gaseous effluent to the environment. As indicated in new Subsection 11.3.10.1, the only release point is the reactor building stack. The radwaste building and turbine building effluents are brought over to the reactor building before their release. The effluent flow rate for the secondary containment HVAC and the turbine building HVAC systems have been added to the appropriate flow diagrams (Figures 9.4-2, 9.4-3). The radwaste effluent flow rate will be included in the radwaste flow diagram when the diagram is added to Section 9.4 in a future amendment. The characteristics of the effluents are provided in Table 12.2-19.

Question 430.166G

Provide a discussion on compliance with GDCs 60 and 64 for all gaseous releases to the environment (do not limit this discussion to the offgas system).

Response 430.166G

Response to this question is provided in Subsections 3.1.2.6.1.2. and 3.1.2.6.5.2.

Question 430.166H

Monitoring of the individual performance of the equipment within the offgas system.

Response 430.166H
The offgas instrumentation critical to operation is listed in new Table 11.3-4.

Question 430.167
The total annual noble gas release from the offgas treatment system given in ABWR SSAR Table 11.3-1 is incorrect. Also, the table lists only releases from the offgas treatment system. Provide a table listing expected annual total airborne release from all sources (offgas system, mechanical vacuum pump, gland seal, building ventilation releases including containment purges) for noble gases including Argon-41, iodines, particulates, carbon-14, and tritium during normal plant operation including anticipated operational occurrences. (11.3)

Response 430.167
Table 11.3-1, listing releases from the offgas system, has been corrected as indicated on the attached markup. Table 12.2-19 lists airborne releases for all components of the plant.

Question 430.168
Provide a table comparing airborne effluent concentrations for all radionuclides during periods of fission product release at design levels from the fuel with 10 CFR Part 20 concentration limits (11.3.)

Response 430.168
See Table 12.2-20.

Question 430.169
Section 11.4.2.3.5 makes reference to storage of containers until they can be shipped. However, no description of the storage facility for solid wastes is provided. Provide information regarding these storage facilities that shows that these facilities will meet the guidance of BTP ETSB 11-3, Part B.III and Regulatory Guide 1.143.

Response 430.169
Sufficient storage is provided in the radwaste building to hold at least six months production of radwaste ready for shipment. This amount of storage meets the requirements for at least 30 days storage and capable of accommodating at least one full offsite waste shipment in BTP ETSB 11-3, Part B.III. This storage also meets the requirements for minimizing personnel exposure, seismic criteria and quality assurance in Regulatory Guide 1.143.

Question 430.170
Provide a table of expected waste volumes generated annually by each “wet” solid waste source (normal and greater-than-expected surge waste volumes) and the capacities of all tanks accumulating spent resins and filter sludges. Provide the corresponding specific activity for each “wet” solid waste source. These tanks should be sized so as to meet the storage requirements of BTP ETSB 11.3, Part B.III.1. Provide an estimate of expected annual “dry” solid wastes and the corresponding curie content.

Response 430.170

Wet Waste Source	Volume Generated (m^3/yr)	Specific Activity
CUW F/D sludge	4.7	2.72E06 MBq/kg
FPC F/D sludge	1.8	7.18E04 MBq/kg
Condensate Filter sludge	4.6	8.88E03 MBq/kg
LCW Filter sludge	0.2	5.55E04 MBq/kg
Condensate Demineralizer resin	18.0	2.11E03 MBq/kg
LCW Demineralizer resin	5.0	4.37E03 MBq/kg
HCW Demineralizer resin	2.7	3.11E–01 MBq/kg
Concentrated Liquid Waste	27.4	1.73E02 MBq/kg

The first four items in the above table are stored in either of two CUW phase separators which have a capacity of 4 m^3 each. During a normal period these four wastes are generated at a rate of about 2 m^3 in 60 days.

The waste resins are stored in the spent resin tank which has a capacity of 50 m^3. During a normal period spent resin is generated at a rate of about 2 m^3 in 30 days. Thus, the storage requirements in BTP ETSB 11.3, Part B.III.1 are met.

Dry Waste Source	Volume Generated	Total GBq
Combustible waste	225 m^3/yr	59
Compactible waste	38 m^3/yr	11
Other waste	100 m^3/yr	259

Question 430.171

Table 11.4.2 shows a solid waste generation rate of 97.3 m^3/yr This amount of solid waste is significantly smaller (by an order of magnitude) than values used in previous FSARs for BWRs. Provide the justification for this reduction in waste production or revise the estimate for waste production rates.

Response 430.171

The amounts of shipped solid wastes are as follows.

Waste Type	Shipped Volume (m^3/yr)
Concentrated waste	4.4
Combustible waste	5.6
Compressible waste	15
Resins and sludges	40
Others	100

The major features of the ABWR that reduce the amount of shipped radwaste are:

(1) An incinerator is used to reduce the volume of combustible waste.

(2) A compactor is used to reduce the volume of compressible waste.

(3) The use of filters (in the condensate treatment and radwaste systems) that do not use a precoat significantly reduces the volume of powdered resins and sludges.

Question 430.172

Identify which of the design criteria from ABWR SSAR Section 11.2.1.2 are deemed to be applicable to the solid waste system. Specifically, the criteria of Sections 11.2.1.2.1 (Quality Classification, Construction and Testing Requirements) and 11.2.1.2.2 (Seismic Design) should be applicable to the solid waste system and should be identified in Section 11.4.

Response 430.172

The last paragraph of Section 11.4.1.2 states that the criteria in Subsection 11.2.1.2 are also applicable to the solid waste portion of the radwaste system. This includes the criteria of Subsections 11.2.1.2.1 (Quality Classification, Construction and Testing Requirements) and 11.2.1.2.2 (Seismic Design).

Question 430.173

Verify that the structures containing the solid waste system meet the seismic qualifications of Regulatory Guide 1.143, Position C.3.1.3. (11.4)

Response 430.173

The structures that contain the solid radwaste system shall be designed to meet the seismic qualification of Regulatory Guide 1.143. The foundation and adjacent walls of these structures shall be designed to the seismic criteria to a height sufficient to contain the maximum liquid inventory expected to be in the building.

Question 430.174

Section 11.4.1.2 (Design Criteria) states in part that "Proportional amounts of waste and fixative are incorporated … to insure that no free water accumulates in the waste container." Provide details on the procedures needed to insure proper mixing and to detect free water if still present after mixing.

Response 430.174

A purpose of the process control program is to prevent free liquids from entering the waste container. The cement-glass paste is prepared in a mixing tank in the following manner.

(1) A predetermined amount of water is weighed in the water measuring tank. It flows by gravity to the mixing tank.

(2) A predetermined amount of solidification agent (cement-glass) flows from the solidification agent silo into the solidification agent measure hopper and is weighed.

(3) The mechanical mixer in the mixing tank is started and the solidification agent is added to the mixing tank at a controlled rate by a rotary feeder.

(4) Mixing continues for a predetermined time. A torque sensor on the mechanical mixer will alarm is the paste viscosity exceeds a predetermined limit.

(5) The paste is added to the waste container by gravity. Level sensors with interlocks and alarms are provided to detect overflowing of the waste container with paste.

This procedure has been developed by extensive laboratory testing.

Question 430.175

Discuss compliance of the solid waste management system with 10CFR20.106, GDCs 60 and 63 requirements. Include both "wet" solid wastes and "dry" solid wastes in the discussion. (11.4)

Response 430.175

The solid waste management system processes both wet and dry solid wastes in compliance with the following.

The releases of radioactive materials to an unrestricted area are within the concentration limits of 10CFR20, Appendix B, Table II. All solid wastes are monitored for radiation before either processing or disposal as nonradioactive waste. It is expected that some dry solid waste will be disposable as nonradioactive. All liquids and gases from solid waste processing are treated by the liquid waste system or by the radwaste building ventilation system.

The solid waste system has sufficient storage of both unprocessed and processed wastes to deal with both normal and anticipated operational occurrences. These storage facilities have been designed with adequate shielding to protect the operators from excessive radiation.

Question 430.176

Discuss how the solid waste management system meets the guidelines identified under "Additional Design Features" in BTP ETSB 11.3, Part B.V.

Response 430.176

The following design features are incorporated into the solid waste system:

(1) All evaporator concentrate piping and tanks are heat traced to prevent the concentrates from solidifying.

(2) All components and piping which contain slurries have flushing connections.

(3) The storage facilities for solidification agents are in low radiation areas, generally less than 2.5E–05 Gy/h, and have provisions for sampling.

(4) All tanks and equipment which use compressed gases for transport or drying of resins or filter sludges are vented to the plant ventilation exhaust system. The vents are designed to prevent liquids and solids from entering the plant ventilation system.

Question 471.42

EPRI-ALWR Requirement Document in Chapter 12**:** Radioactive Waste Processing System (page 12.3-8), Section 3.2.1, Goal for GRWPS Radioactivity Release states that:

"The total radioactivity of gases released from the plant (excluding the activity of released tritium) shall not exceed the following values:

BWR: 2,000 curies per year, etc."

ABWR, standard plant, in Chapter 12, Radiation Protection, in Subsection 12.2.2.1, production of Airborne Sources, last paragraph states that:

"Approximately 7,900 Ci/plant/year of noble radiogases are released; one-half of this total is released from turbine building...."

Please address this apparent discrepancy.

Response 471.42

The value for total offsite airborne release found in Chapter 12, Subsection 12.2.2.1 has been changed from 2.92E08 MBq/yr to 1.89E08 MBq/yr. The isotopic breakdown for this release is given in Tables 12.2-19 and 12.2-20. This value does not compare to the EPRI requirements of 7.4E07 MBq/yr from EPRI Chapter 12, paragraph 3.2.1 for two reasons. The first reason is the EPRI requirements specify release of selected isotopes whereas the ABWR number is a total over all isotopes. Using the EPRI isotopic list for the ABWR number would result in a release of 1.37E08 MBq/yr. The second reason is the EPRI goal is based upon expectations from actual plant performance. The ABWR value is a more conservative evaluation of potential

performance based upon bounding fuel performance coupled with a conservative evaluation of the offgas system to remove and delay noble gas releases. The ABWR evaluation, however, is made not to compare to a goal for release but as a conservative evaluation for determination of compliance to the requirements of 10CFR50, Appendix 1, on releases to unrestricted areas.

As an example of such a difference in calculations for goals as compared to requirements, the ABWR assumes a source term of 555 MBq/sec (t=30 min delay) as the source term to the offgas system. In fact based upon data similar to that used by EPRI for BWRs with improved fuel and water chemistry technical specifications, the release value would run around 185 MBq/s which, ignoring conservatisms in the evaluation of the offgas system, would result in a release comparable to the EPRI goal of 44.4 MBq/s.

20.3.14 Response to Fourteenth RAI—Reference 14

Question 620.1

Describe GE's human factors design team, the staff's human factors expertise, and its responsibilities for human factors on the ABWR design.

Response 620.1

The team is responsible for the compliance of the plant design with all regulatory requirements related to Human Factors Engineering and the inclusion of good human factors engineering practice in all aspects of the plant design. The five members of the team have a total of 99 years of human factors engineering, managerial, quality assurance, plant operating and design experience on BWRs.

Descriptions of the individual members of the ABWR human factors team are as follows.

Chairman: Twenty seven years of human factors engineering, licensing and design experience at GE in nuclear energy. Responsible for the development of the man-machine interface design for the ABWR and SBWR projects. Experience includes human factors engineering for the General Electric Emergency Response Information System (SPDS) and GEPAC Plus and NUMAC computer products

Second Team Member: Fifteen years experience at GE in nuclear energy. Developed Human Factors Engineering Plan and documentation system for ABWR Project. Currently technical leader of an international study group working on design optimization for the SBWR Project.

Third Team Member: Thirty one years experience at GE in nuclear energy. Experience includes the evaluation, development and implementation of quality assurance requirements and procedures for the ABWR certification program in the United States and the ABWR Project in Japan, the audit and review of GE quality and management activities both domestic and international and the review and development of both BWR and fast reactor fuel.

Fourth Team Member: Twelve years experience at GE in nuclear energy. Experience includes instrumentation and control system design, human factors engineering of nuclear power plant control rooms, containment transient analysis and program management. Conducted detailed control room design reviews for several domestic and foreign operating and requisition nuclear plants.

Fifth Team Member: Fourteen years experience at GE in nuclear energy. Responsible for preparation of Chapter 18, "Human Factors Engineering", of the ABWR SSAR. Principal contributor to the development of plant automatic operation and control room design. Developed emergency operating procedures, system operating procedures and integrated operating procedures for the ABWR.

Question 620.2

Both Hitachi and Toshiba are designing main control room workstations which, although based upon the "common engineering studies, may result in two different workstation design implementations within one two-unit control room. Describe the process that GE will use to actually implement high-level, single-unit workstation requirements and design selection, including the decision process to be followed in selecting the Hitachi or Toshiba approach, a hybrid, or a different design.

Response 620.2

The control room design definition documented in the ABWR Standard Safety Analysis Report (SSAR) is specifically independent of any particular equipment vendor's details of design implementation. The main control room panels provided to a plant referencing the ABWR SSAR will be procured per the design implementation requirements as discussed in Section 18.5 of the SSAR.

Question 620.3

Describe how the GE/US ABWR differs from the Japanese versions in terms of the human factors/operations considerations. For example, it is our understanding that the Japanese do not use symptom-based procedures which are essential to accident management in U.S. plants; this difference will presumably have an influence on workstation design.

Response 620.3

The GE/US ABWR and the Japanese ABWR are essentially the same in terms of the human factors/ operations considerations. The Japanese BWR Owners' Group (BWROG) has developed symptom based emergency procedure guidelines based primarily on the U.S. BWROG Emergency Procedure Guidelines, Revision 3. Therefore; the basic strategies developed for emergency plant operation of Japanese BWRs, including the Japanese ABWR, will be the same as that of the U.S. BWROG. The Japanese BWROG has begun implementation of the symptom-based emergency operating procedures commencing with basic operator training starting in early 1990. In the development of the main control panel prototypes and of the ABWR simulator in Japan, the symptom-based emergency operating procedures are planned to be used for final control panel design validation and testing.

Section 18.5 specifies the requirements for verification and validation of the operator interface design. These requirements address human factors/operation considerations for normal and emergency operations in the design of operator interfaces.

Question 620.4

The control room will make use of many advanced hardware and software technologies for which the nuclear industry has little experience. Describe the process that GE will use to demonstrate that these technologies are being properly used and will not adversely effect human performance.

Response 620.4

A description of the criteria for the verification of the adequacy of the control room design implementation is contained in the ABWR Standard Safety Analysis Report, Section 18.5. This section contains discussions of System/Operation Analysis; Human Reliability Analysis Requirements and Inspection, Tests and Acceptance Criteria for the plant controls and instrumentation.

Question 620.5

The EPRI ALWR requirements document and several of the GE documents provided during the March 6-7, 1990 meeting speak about optimizing operator performance. Describe how operator performance is defined in terms of performance parameters and the measures to be used to quantify these parameters. Describe how this information will be factored into the design process in a timely fashion.

Response 620.5

Optimum operator performance is defined as the timely and error-free performance of his duties by the operator. If an operator performs his or her tasks at the time required and does so without any mistakes, this constitutes optimum operator performance.

Therefore, the measures used to quantify the quality of operator performance are time and number of errors.

Recognizing that timely and error-free operator actions constitute optimum performance, the control room design process has as goals, the promotion of efficient and correct operator actions through the following means:

(1) Simplification and streamlining of plant monitoring and control by providing an improved arrangement and organization of control room modules,

(2) Optimization of plant data presentation so that the data which control room personnel must survey, analyze and comprehend results in an improvement in response time and a reduction in the number of operator errors relative to previous designs, and

(3) Integration of operator interface functions to provide a uniformity in function and appearance for simple and efficient execution of control functions.

These design goals have been achieved through the adherence to human factors engineering guidelines in all phases of the control room design.

Question 620.6

It appears that the workstation design may precede procedure design (which has historically been the case in the nuclear industry). Yet, it seems that GE has the opportunity to follow the potentially valuable path of specifying what the operator has to accomplish in the control room to a great level of detail (via detailed task analyses and implementing procedures) and then design a workstation that will best support those operator tasks. Describe the temporal

relationship between the future development of the operating procedures and the design of the workstation.

Response 620.6

Early in the design of the ABWR, the need to specify the operator tasks and to develop operating procedures prior to the design of operator interfaces was recognized. Therefore, system level operating procedures were developed concurrent with the development of the ABWR system designs. These procedures consist of normal operating procedures for systems and for integrated plant startup and shutdown operations. In addition, symptom-based emergency procedure guidelines were developed. These procedures were used as inputs for task analyses. Man-machine interface requirements were then specified based upon these task analyses.

The symptom-based emergency procedure guidelines developed for the U.S. ABWR are based on the U.S. BWROG Emergency Procedure Guidelines, Revision 4 and are presented in Appendix 18A. These guidelines specify operator actions for accidents including postulated severe accidents. Section 18.5 specifies requirements for verification and validation of operator interfaces, taking into consideration normal plant operation and emergency plant operation.

Question 620.7

The PRA can provide insights about the most significant human errors in terms of their effects on plant safety. With this knowledge the human-system interface can be designed to help mitigate the effect of the errors and to make the system more tolerant to errors which have occurred. Describe how the results and in sights derived from the PRA are being used to support the control room design.

Response 620.7

Insights derived from the PRA were applied to improve the emergency procedure guidelines (EPGs). The EPGs are used as inputs to operator task analyses, and are also used for operator interface design verification and validation. As a result of the PRA, several additional design features were incorporated into the ABWR design, as discussed in Chapter 19. The containment overpressure protection features and the lower drywell flooder system are passive, requiring no operator action.

The PRA analyses assumed that an operator would follow event-based operating procedures during accidents. Consequently, the EPGs were reviewed to assure that the operator actions assumed in the PRA are included based upon symptoms that would occur during these accidents. An improvement in the EPGs is in the area of containment flooding after a severe accident. EPGs developed for earlier BWRs call for the operator to fill the containment to the level of the active fuel if the reactor vessel water level cannot be maintained above the top of the active fuel. For an ABWR plant which has undergone a severe accident, this strategy can be improved. Filling the containment to a lower level is appropriate for two reasons. First, noncondensible gases in the containment are compressed to a lesser degree and containment pressure is reduced compared to the earlier strategy. Second, filling the containment to a lower

level avoids flooding the containment overpressure protection system and the potential for subsequent damage to system piping if the rupture disk setpoint pressure is reached. Therefore, the operator is directed to fill the containment to the level of the bottom of the reactor vessel. In the very long term, for post accident recovery and cleanup operations, it would probably be necessary to increase containment water level to an elevation above the top of the active fuel.

Insights from the PRA would influence the operator interface design. Refer to Subsection 18.5.3 for a discussion of the requirements on design, verification, and validation of the operator interface.

Question 620.8

Describe the content and format of training materials to be provided by GE to purchasers of the ABWR. Will these materials be offered as customized options, or will they be included and standardized?

Response 620.8

The ABWR Standard Safety Analysis Report (SSAR) is based upon plant system design definitions and equipment as depicted in Figure 20.3.14-1. As indicated in this figure, it would be possible to prepare training materials as part of the design certification. GE has elected, however, to defer preparation of this training material to the first applicant referencing the ABWR design since the associated cost is prohibitive at this time (estimated to be in excess of two million dollars) and the training materials are not part of the design. Subsequent applicants will (which will be subject to NRC review on the docket of the first applicant) thereby providing standardized training material. Deferral of the preparation of training materials will be included as an interface requirement in a future amendment.

Question 620.9

Describe the role of GE in the development of normal, abnormal and emergency operating procedures, including the generic technical basis document and writers guide, the development of procedures generation documents, the verification and validation process, and the procedures maintenance program. Will GE develop sample procedures or offer a package of procedures to be modified based on site-specific technical considerations?

Response 620.9

GE has developed normal and emergency operating procedures as inputs for operator task analyses. In addition, GE has developed the ABWR Emergency Procedure Guidelines (EPGs), included in Appendix 18A. Appendix 18D lists all the inputs used for calculation of operation limits and the outputs of those calculations. The results of these calculations have been incorporated into the EPGs in Appendix 18A. The applicant referencing the ABWR design will be required to update some of the calculations based upon specific plant installation details and submit the procedure generation package as required by NUREG-0737 Supplement 1. In essence, GE has developed the plant-specific technical guidelines normally required of an operating utility.The procedure verification, validation, training, writer's guide, and maintenance programs will be the responsibility of the applicant referencing the ABWR design.

Question 620.10
Describe how the analysis of functions will determine a proper balance of automated and manual tasks to ensure an appropriate operator work load.

Response 620.10
Relative to previous BWR designs, the ABWR design provides an increased scope of automation of operator monitoring and control functions. This extended scope of ABWR plant and system level automation, discussed in Section 18.4.4 of the ABWR Standard Safety Analysis Report (SSAR), was defined based upon evaluation of the operator's work load during normal plant operations. An objective of incorporating the extended scope of automation in the ABWR was to achieve an appropriate operator work load by selectively automating operator functions, particularly those operations which were tedious or repetitive and contributed to periods of peak operator work load activity.

In the implementation of the ABWR design, tests and analysis will be conducted, as defined in Section 18.5 of the SSAR, which will ensure that the particular design implementation provides an appropriate work load.

Question 620.11
Describe the decision criteria used to select tasks for analysis, and describe how the task analyses were organized.

Response 620.11
In developing the man-machine interface requirements for the major plant systems, system-level task analyses were done for each of the individual systems. These analyses were comprehensive in that all system functions were broken down into tasks and analyzed to determine the operator information and system control requirements for accomplishing each task. The tasks were characterized in these system-level task analyses using a consistent taxonomy. Task data collection forms were used to collect the information and control requirements, as well as other data pertinent to each task, which was than summarized in tabular form in the reporting of the individual system task analyses.

In the implementation of the ABWR design, the tests and analyses discussed in Section 18.5 of the ABWR Standard Safety Analysis Report (SSAR) will be conducted. As discussed in the design implementation requirements of that Section 18.5 text, task analyses will be conducted which cover the full range of normal and off-normal plant operations. Details regarding the development of particular accident scenarios and task selection criteria will be established, as appropriate, as part of those design implementation activities. The organization, conduct and documentation of those task analyses, will be in conformance with the established ABWR procedures, discussed in Section 18.3 of the SSAR.

Question 620.12
Describe the criteria used for the selection of specific accident scenarios/sequences for which task analyses were performed and identify the scenarios/sequences which were analyzed.

Response 620.12

See the response to Question 620.11. As part of ABWR design implementation, documented in Section 18.5 of the ABWR Standard Safety Analysis Report (SSAR), task analyses will be performed on all integrated operating procedures and emergency operating procedures. These analyses will envelope both normal and off-normal events including consideration of the following:

- Single equipment failure
- Single operator error
- Loss of electric power
- Double equipment failures
- Double operator error
- Combination of equipment failure and operator error

Question 620.13

Very detailed procedures for function and task analyses were developed by the ABWR team (ref. PPE ITEM NO. 5.1.3). However, the task analysis report provided for the Nuclear Boiler System (ref. PPE Item No. 3.9B, Rev. 0, 9/22/89) supplied considerably less detail than that specified in the procedure. The analysis report specifies that it was conducted in accordance with a list of reference documents: but this list does not include the procedures document. While the report does identify monitoring and control requirements and makes recommendations for automation, it does not provide timelines or workload estimates needed from the task analysis for other design and analysis activities, such as the HRA. Discuss why the detailed task analysis procedure was not followed and the consequences of this decision.

Response 620.13

The task analysis procedure will be followed in its entirety as the plant and systems design proceeds through detailed hardware component and software design and implementation phases. Task analyses are iteratively performed throughout the system design life cycle. The Nuclear Boiler System Task Analysis Report provided as an example for NRC review is an initial issue version which addresses the level of design commensurate with the system designs presented in the SSAR and that sample task analysis report includes only a part of the total analysis to be eventually performed for each of the plant systems according to the Task Analysis Report Procedure. Task analyses of transients and simulated accident scenarios as well as timelines and workload estimates will be performed, as defined in the governing ABWR design procedure, using the integrated operating procedures and the emergency operating procedures. These remaining task analyses will be performed as part of the hardware/software procurement activities for the ABWR man-machine interface system design.

Question 620.14

Discuss the technical basis for single-operator operations with regard to the requirements of 10 CFR 50.54(m), and the following issues:

(1) The control room technology developments which would enable this approach;

(2) The analyses that will be performed to assure that safety will not be compromised.

Response 620.14

The ABWR Standard Safety Analysis Report (SSAR) defines the operating crew for the single unit ABWR to include four people normally stationed in the main control room. These crew members include one licensed reactor operator, one licensed senior reactor operator, an assistant shift supervisor and the shift supervisor. Both the shift supervisor and assistant shift supervisor are licensed senior reactor operators. Therefore, the ABWR is considered to be in compliance with the requirements of 10CFR 50.54(m).

In providing the ABWR with the enhanced man-machine interface capabilities, which enable normal plant operations to be conducted by a single operator, the ABWR control room staff has additional flexibility in performing their functions. Working as a team, with the first operator performing the normal plant monitoring and control functions, the second operator may assist the first operator, perform broader scope and more detailed monitoring of the plant systems and equipment status and trends or perform evaluations relative to plant operation.

Chapter 18 of the SSAR describes the technologies that will be employed in the ABWR control room. Key design features include: the wide display device for overall plant monitoring; plant-level automation via application of sequence master control functions; the compact main control console and operator guidance, which displays the proper operating sequences on the main control panel CRT screens.

The tests and analyses conducted as part of the ABWR design implementation, (See SSAR Section 18.5) will assure that safety is not compromised.

Question 620.15

Describe how the plant addresses the single-failure criterion with a single operator.

Response 620.15

(See response to Question 620.14). The ABWR control room is staffed, for normal operations, with four people. This level of staffing is similar to previous BWR plants. Although the ABWR provides capability for operation by a single operator, the function of the entire operating staff remains that of assuring safe and stable plant operation. In the event that the single operator, who may have the responsibility for operating the plant, commits an error or for some reason becomes unable to perform his duties, the other three licensed personnel in the control room, who will be monitoring the plant status and the actions of the operator at the control console, will intervene as the situation warrants.

Question 620.16

Which existing BWR is most similar to the ABWR with regard to the role of the operations staff? Discuss any significant differences that exist between ABWR operations and operations at this most similar existing BWR.

Response 620.16

The Clinton BWR/6 operated by Illinois Power is most similar to the ABWR with respect to the ABWR main control room design and with respect to the role of the operations staff. The Clinton main control room design is GE's Nuclenet product line. The features of the control room design is described in Chapters 7 and 18 of GESSAR II. In the Clinton main control room, the operating staff consists of a crew of five for plant startup and shutdown; one reactor operator (RO) at the main console, two operators (RO) for the BOP and ECCS panels and electrical distribution panel, one shift supervisor (SRO), and one assistant shift supervisor (SRO). The reactor operator is normally responsible for control of the RWCU, feedwater and condensate, reactor level control, recirculation system, reactor core instrumentation and rod control, turbine pressure and steam bypass control, turbine and generator control, and the turbine electrical systems at the main console. Controls for these systems are conventional hard dedicated switches and monitoring of system status is via CRTs. The other two operators are responsible for control of the balance of plant systems. Controls and monitoring of these systems is by conventional hard dedicated switches and display meters. For steady-state power operation, the operating staff consists of a crew of four; two reactor operators, one assistant shift supervisor, and one shift supervisor. For all modes of operation, the shift supervisor can be anywhere in the plant.

The ABWR is designed to be operated by a crew which consists of one senior reactor operator, one reactor operator, one shift supervisor, and one assistant shift supervisor. The ABWR is designed to be operable by one senior operator during normal plant startup, shutdown, and power operation. During accidents, two operators may operate the main control console. The significant difference between the ABWR and the Nuclenet control room operating concept is that in the ABWR, the senior reactor operator will monitor and operate all the systems, both BOP and NSSS. This is possible because of extensive plant automation and the incorporation of advanced display and control technologies, operator guidance function provided by CRTs, mode-oriented system operation, and large screen display panels.

Question 620.17

Describe the implications for operator selection and training based upon the ABWR's use of increased automation, advanced instrumentation and control and compact workstations.

Response 620.17

It is anticipated that operator selection, in terms of educational requirements, general intelligence and temperament, will be relatively unaffected by the technologies employed in the ABWR control room. Although it may require more skilled technicians to service and maintain the advanced technology equipment in the ABWR control room, the user (i. e., operator)

interface features (e.g., touchscreen CRTs) are comparatively familiar to the general population. Furthermore, the operator interface data processing functions are specifically designed to be simple and straightforward so that the operator can easily comprehend the status of the plant and the system operation. Therefore, the advanced designs and technologies employed in the ABWR design are not expected to impose any significant constraints on the selection and training of operators.

Question 620.18

With increases in automation in complex systems which change the operator's role from that of an active "in-the-loop" controller to that of a systems monitor, human factors practitioners have frequently identified new problems, including:

(1) Maintaining an appropriate level of work load;

(2) Maintaining vigilance in system monitoring;

(3) Maintaining adequate awareness of system status so that the operator can intervene and take over system operation when required;

(4) Maintaining specialized skills.

Discuss how each of the above issues will be addressed.

Response 620.18

(1) With reference to Item (a), regarding maintenance of an appropriate level of work load, please refer to the response to Question 620.10.

(2) Although the ABWR design does include an expanded scope of automated functions, the operator is still a necessary element and in-the-loop of the plant control functions. Even in its most automated mode of operation, as discussed in Chapter 18 of the ABWR Standard Safety Analysis Report (SSAR), the ABWR design requires that the operator remain an active part of the plant monitoring and control function.

Even during automated plant operations, the operator must take action to effect any changes in safety system status, to operate selected non-safety systems which have been purposefully omitted from the scope of plant automation and to intermittently acknowledge that the automated plant operations may proceed from one predetermined breakpoint to the next breakpoint in the normal sequence of operations. One of the objectives of this ABWR plant automation system architecture, which requires continual operator actions in order to proceed, is that it helps assure that the operator remains attentive in his duties of plant and system monitoring even when the plant is under the automated mode of operation.

(3) System status information is available to the operator on both the main control console displays and on the wide display device panels, again, as discussed in Chapter 18 of the SSAR. To further assist in assuring that the operator can readily determine plant/system status, automated system operation logic is kept simple and follows the same sequences as if the operator were performing the operation manually per the established system procedures. Also, the progress of automated sequences of operation are displayed to the operator such that the operator may discontinue automated plant operations at anytime and assume full control under the manual mode of operation.

(4) The maintenance of specialized skills is an area to be considered during the course of the design implementation through the development of the operator training requirements. Options which may be considered to maintain important specialized skills that are less used with the broad scope application of plant automation include specific plant simulator sessions or occasional operation of the plant in the full manual mode for the specific purpose of maintaining the necessary high level of operator skill in such manual operations.

Question 620.19

While the plant is under automated control and an abnormal condition such as a reactor scram occurs, the Power Generation Control System (PGCS) alerts the operator and drops out of automated mode. Describe the time period over which this change occurs. Since the PGCS controls many systems, describe the implications for operator workload at, and subsequent to, the time of the status change.

Response 620.19

For abnormal events resulting in a reactor scram, the PGCS will drop out of automated mode within 2 seconds. But note that this has no impact on the SCRAM function provided by the FMCRDs of the control rod drive system (initiated by the reactor protection system logic). So, with respect to change in the control rod position after scram initiation, the PGCS mode has no impact at all. The rod control & information system (RC&IS) immediately (e. g., within 200 milliseconds) initiates the SCRAM FOLLOWING function after initiation of a reactor SCRAM by the RPS. Initiation of the SCRAM FOLLOWING function of the RPS also results in a rod withdrawal block condition and automatic reversion of the RC&IS to the manual rod movement mode. Automatic rod movement can not be reestablished until the SCRAM condition is cleared and even then, operator action is required.

With respect to control of other plant equipment (other than control rod position) the PGCS would continue to perform the applicable supervisory control action, if any, until it drops out of automatic mode. It must be remembered that the PGCS does not directly control the status of plant equipment. This is performed either by lower level logic
(e. g., system level logic such as in the automatic power regulator or local level logic such as in motor control centers). The PGCS supervisory control actions are mostly sequential triggering

of sequence master control logic functions in lower level plant systems. In a few cases, the PGCS can raise/lower the setpoints of certain lower level systems (e. g., raising the pressure setpoint used for dome pressure control during plant heatup). Reversion of the PGCS to manual mode results in the lower level systems (which are continuously controlling the status of the plant equipment similarly to the control functions in existing BWR operating plants) reverting to the no change in status default. Then, system level logic has total priority. Thus, if the PGCS were in the process of raising the pressure setpoint, no further automatic changes would occur when the PGCS reverted to manual and the pressure setpoint would stay at the last valid value. Similarly, if a sequence master action had just been initiated prior to reversion of the PGCS to manual, the appropriate system logic would attempt to complete that sequential action unless the abnormal status also prevented completion of that sequence master function (e. g., if RWCU blowdown mode start had just been triggered, the RWCU logic would attempt to complete this requested action).

It should also be noted that continuous, automatic control of reactor power is not a function of the PGCS. The automatic power regulator (APR) System is the top level continuous controller of reactor power for automatic mode operation. The PGCS only changes the applicable APR mode and provides pertinent changes in the associated setpoints for each mode. Thus, during the two second period that may elapse between detection of an abnormal condition and reversion of the PGCS to manual, an applicable APR setpoint may increase/decrease slightly or a change in APR mode may occur. In either case, the change in reactor power status during this time period (due to automatic control actions) will be insignificant.

In summary, the up to two second time delay between detection of abnormal plant conditions and reversion of the PGCS to manual mode will result in no direct significant change in plant status. The abnormal event itself (e. g., a SCRAM) can result in significant changes in plant status. Such changes are due to functions and logic designed into the lower level controllers and would be of the same consequence as if manual mode operation was being conducted at similar initial operating conditions. Lower level plant and equipment protection logic (e. g., SCRAM, rod blocks, automatic isolations, ECCS system initiation, motor overcurrent trips, turbine trip, etc.) is not impacted by the PGCS operating mode. There are no safety concerns caused by this two second time delay.

With respect to the question on operator workload at, and subsequent to, the time of PGCS status change, there is almost no difference from the analogous workload for a current BWR after such abnormal events. As discussed above, when the PGCS reverts to manual mode, it is basically the same as having been in the manual mode of plant operation when the abnormal event occurred. There have been a few improvements incorporated into lower level logic of the ABWR to reduce operator workload after a SCRAM (e. g., automatic reconfiguration to low flow feedwater control mode, when appropriate). With respect to automatic or manual control of safety systems, the ABWR is comparable to conventional designs in terms of operational tasks to be performed to recover from an abnormal event. The improvements in the human engineering design of the ABWR main control console do provide improved operability for

completing abnormal event recovery actions. In addition, automatic operator guidance incorporated into the design will aid the operator in restoring a normal plant status.

In summary, recovery from abnormal events that occur when the PGCS is in automatic mode is essentially the same as recovery from abnormal events that occur when in manual mode (with similar initial normal operating conditions). Operator workload for completing recovery operations is not impacted by having been in the automatic mode initially.

Question 620.20

The major driving force affecting control room design appears to be the concept of one-person operations during normal conditions. This leads to the requirement to consolidate most of the monitoring and control capability into a single, relatively compact work station in contrast to the traditional analog control boards. This approach then leads to requirements to minimize dedicated controls and displays (because of limited real estate at the work station), utilize soft controls (to replace dedicated controls), utilize CRT-like display devices which only display a limited set of plant data at a time (to replace instrument displays) and to utilize intelligent operator aids based upon expert systems, etc. to assist the one operator to accomplish his tasks. While these technologies may have merits of their own, we are concerned about the appropriateness of this technology as a design driver for U.S. plants. Please discuss your rationale for this concept.

Response 620.20

The basic ABWR control room design goal is to minimize the burden on the operating staff and promote efficient and correct operator actions. In achieving that design goal, the ABWR control room design provides the capability for operation by either a single operator or multiple operators. This flexibility in plant operation is possible due to implementation of several key design features: the wide display device for overall plant monitoring, plant-level automation, system-level automation via the sequence master control switches, the compact main control console design and implementation of operator guidance functions which display appropriate operating sequences on the main control console CRTs. The role of the operator will primarily be one of monitoring the status of individual systems and the overall plant and the progress of automation sequences, rather than the traditional role of monitoring and controlling individual pieces of system equipment.

The rationale for providing the capability for operations by a single operator during routine plant maneuvers is based upon several considerations. These are discussed below:

(1) **Operator Communications Errors:** Single-person operation will eliminate errors of communication. Included in this category of errors are those related to the spoken word as well as unspoken communications. In writing about the Three Mile Island (TMI) incident, Sheridan* states:

* Sheridan, T. B., “Human Error in Nuclear Power Plants”, *Tech. R.,* February, 1980, 23-33.

"Nuclear plant operators work in teams, based on the premise that two or more heads are better than one. But there is a great deal of interaction among team members, some of it subtle and unspoken. Such interpersonal communication is little understood but assuredly does affect the reliability of human performance. For example, operators unintentionally could reinforce one another's misimpressions, making the team less reliable than a single operator who would be more likely to think a matter through carefully. This means that human error rates for individuals may differ from those for teams."

The Rogovin Report* indicates that it took some time for the operating crew at TMI Unit 2 to become organized to the extent that they were stationed at strategic places.

(2) **Operator Work Load:** Results of operator work load analyses performed as part of the ABWR development program indicate that one-person operation of the plant during normal plant operations is not only feasible but may be preferable to two-person operation. This is true because the high degree of plant automation which is available during normal plant operations reduces the operator work load to a level easily sustained by a single operator but one which may provide a lower level of stimulus if divided between two operators. The characteristic of a very low task load, or stress level, is that there is not enough stimulation to maintain the person at an alert level: his state of arousal is below normal. The subject of appropriate operator work load was discussed in the responses to Questions 620.10 and 620.18.

(3) **Coordination of Operator Activities:** With one operator performing all of the actions, the necessity of coordinating the activities of two or more operators is eliminated. This is closely related to the communications problem discussed above.

(4) **Availability of Assistance:** The ABWR control room staffing level conforms to the requirements of 10 CFR 50.54(m), as discussed in the response to Question 620.14. This means that there are always at least two licensed reactor operators in the control room in addition to the crew member who is actually operating the plant. Such ready availability of assistance significantly reduces the risk that might normally be considered to be inherent in one-man operation.

Question 620.21

One of the main features of the control room is the use of a computer-based work station in place of the traditional control boards with dedicated controls and displays. With such an approach, the methods by which information is displayed to the operator via CRTs and other display devices is of critical importance. Indeed, the display of information and the methods by which the operator interacts with that information are arguably the most important aspects of

* Rogovin, M, and G. E. Frampton, Jr., (eds), "Three Mile Island, A Report to the Commissioners and to the Public, Vol. 1", Special Inquiry Group, U. S. Nuclear Regulatory Commission, Washington, DC, January, 1980.

the control room design. Yet, most of the information presented by GE thus far concerning control room and work station design has emphasized the hardware, ergonomics and anthropometrics of the design. Little information has been made available on the display design and human-software interface. Much more information is needed in order to evaluate the adequacy of the control room to support the operator's tasks. Please describe the approach that you will use to determine the following:

(1) The planning and control of the interaction between the operator and system information;

(2) The design basis for the interface (e.g., command language or direct manipulation);

(3) Planning and design of high-level data integration;

(4) Operator access to information and the parameters that will be optimized in the design of the interface (e.g., speed of data access);

(5) Any data that will not be accessible to operators;

(6) Display techniques for various types of data; and

(7) Coding methods to be used.

Response 620.21

The operator interface system design requirements are discussed in Chapter 18. Included in this discussion is a description of the methods of presentation of system and plant summary information to the operator(s). The user-software interface devices used in the control room are touch screen CRTs, flat panel display devices and the wide screen. The requirements for each of these interface devices are described in the SSAR. The design basis for the user-software interface is direct manipulation; there are no keyboards on the main console.

High-level data integration is discussed as a part of the description of the wide display device, which has both software and hardware display modes.

The information needed by the operators is determined by task analyses of the system operating procedures, Integrated Operating Procedures and Emergency Operating Procedures. This information will be made available to the operators in the most appropriate manner, as defined during the equipment procurement and detailed design implementation.

Display techniques and coding methods that comply with accepted human factors engineering guidelines (e. g., NUREG-0700, ESD-TR-83-122, EPRI NP-3701) will be assured through the conduct of appropriate operations analyses as part of the design implementation tests and evaluation.

Question 620.22

Describe how the requirements for: (1) information/data display and (2) methods by which the operator will interact with the system will be reflected in hardware design requirements. It appeared from the material presented by GE on March 6-7, 1990, that hardware requirements were preceding these issues.

Response 620.22

The requirements for information/data display and the methods by which the operator interacts with the system are reflected both spatially and functionally by the hardware design requirements.

The spatial configuration of the main control room panels is a logical consequence of the following requirements:

(1) Information/Data Display Requirements

- Plant summary information to be displayed so as to be visible to entire control room
- Safety and NSSS-related information to be shown on left side of display panels
- BOP-related information to be shown on right side of display panels
- Computer-independent displays available for safety and some key non-safety systems
- Complete interchangeability required for computer-driven display devices

(2) Operator/System Method Interaction Requirements

- Interaction method to require minimal space
- Interaction method to require minimal time
- Spatial dedication to be included for key functions

For a complete description of the relationship of the hardware design to the underlying user/system requirements, refer to Section 18.4.

Question 620.23

With regard to the design of the control room:

(1) Was a human factors design guideline developed specifically for the design of the human software/information interface, as discussed in Question 620.21, above?

(2) Was a human factors design guideline developed specifically for the ABWR to assist in control of the interface design, or were the ABWR human factors design guidelines derived from human factors design guidelines available in the literature? If neither, how were the ABWR guidelines developed? If existing guidelines were used, please identify them and provide the audit trail.

(3) How were guidelines developed for those interface characteristics for which there appear to be no existing guidelines in the literature?

Response 620.23

(1, 2) The ABWR human-software/information interface design is an extrapolation from previous U.S. and Japanese BWR designs. Existing guidelines contained in Reference 1 have been used, as appropriate. Because of the limitations of Reference 1, guidance has also been obtained from References 2 and 3. In the case of the SPDS function, the requirements of NUREG-0737, Supplement 1, have been made a part of the system design basis.

(3) As discussed in the response to Question 620.28, the design of the touch-screen user interface is based upon a broad base of experience. In addition, evaluations of prototype main control panels have been carried out with experienced BWR operators and utilizing simulator-generated scenarios. Data from these evaluations, in the form of videotapes of operator actions and dialogue and operator comments obtained in de-briefing sessions, were analyzed and used to formulate design guidelines.

References:

20.3.14-1 NUREG-0700, “Guidelines For Control Room Design Reviews”, NRC, September, 1981

20.3.14-2 EPRI NP-3701, “Computer-Generated Display System Guidelines”, ORNL, September, 1984

20.3.14-3 ESD-TR-83-122, “Design Guidelines For The User Interface To Computer-Based Information Systems”, Mitre Corporation, March, 1983

Question 620.24

A significant feature of the ABWR control room design is the use of advanced and intelligent operator aids based upon expert systems and other AI technologies. With respect to these operator aids, please describe the following:

(1) The extent of the dependence on intelligent operator aids that is necessary to achieve the single-operator design goal;

(2) The specific operator aids that are planned and the technology on which they are based;

(3) The methods of knowledge engineering that will be used and the steps that will be taken to assure that all appropriate knowledge will be incorporated into the database;

(4) The approach to be taken to develop operator confidence in the systems to assure that they will be appropriately utilized;

(5) The approach to be taken to minimize undue reliance on and blind acceptance of these systems;

(6) The methods to be used for the verification and validation of the performance of intelligent operator aids.

Response 620.24

The use of expert systems and artificial intelligent technologies is not a significant feature of the ABWR control room design.

(1) The ABWR has incorporated features which minimize the burden on the operating staff and promote efficient and correct operator actions. Such features enhance the operability irrespective of whether operations are by a single operator or multiple operators. As discussed in Subsection 18.4.4, the ABWR user interface design includes extensive plant automation functions.

(2) Other functions may include system/equipment monitoring and maintenance support. Details regarding the implementation of such functions will be determined as part of the design implementation and procurement activities.

(3) There are no knowledge-based features in the ABWR operator interface.

(4) Operator confidence in the ABWR plant automation system is bolstered by the following five design features:

(a) The extent of automation implemented in the ABWR has been carefully selected to ensure that the primary control of plant operations remains with the operators.

(b) The basic architecture and scope of automated functions performed by the ABWR Power Generation Control System (PGCS) is based upon the proven plant-level automation design that has been part of the TEPCo standard BWR control room design on all units which have begun commercial operations since 1985.

(c) The PGCS can never directly control the status of any safety system.

(d) The operator can completely stop an automatic operation at any time by simply selecting the manual operation mode.

(e) The operators remain fully cognizant of the plant operational status and can intervene in the operation at any time, if necessary.

(5) Undue reliance and/or blind acceptance of the plant automation is avoided by allowing the operator to maintain close control of plant level automated functions. This close control is accomplished by the incorporation of break point control logic into the design At regular intervals within each automated sequence of operation, break points are established which stop the progression of the operation. When each break point is reached, the operator is required to provide permission to proceed to the next break point by activating the appropriate break point control pushbutton on the automation operator interface on the main control console. This break point control logic assures that the operator remains fully cognizant of the plant status and retains direct control of the progression of an automated operation. In addition, controls are provided which enable the operator to activate a “hold” in the automation sequence at any time.

(6) The validation of the performance of intelligent operator aids will be accomplished as part of the detailed design implementation by validation testing with the reactor operators participating in a simulated control room environment. In this way, feedback from experienced control room crew members will be obtained and used to evaluate the effectiveness of the detailed implementation of the operator aids.

Question 620.25

The workstation will have a few dedicated controls and displays (C/Ds). Describe the rationale and analyses being used to determine which C/Ds will be dedicated and which will be “soft”.

Response 620.25

Dedicated operator interfaces (DOIs) are provided for the rod control & information and neutron monitoring systems. In addition to these, there are dedicated hardware switches for the control of several major components in other systems and for initiating certain automated plant operation sequences.

In conventional BWR designs, large, fixed, full-core displays are used for both primary control and status information concerning control rods and core monitoring. For the ABWR, the full-core display will be available on CRT screens at the main control console and on the variable large screen display. Due to the high availability of the process computer, this full-core status information along with the associated control functions available via the touch screen CRT interface will normally be functioning and will provide the same degree of detailed information and control capabilities as on earlier BWR designs. However, should the process computer suffer a complete failure, the full-core status information and control functions become unavailable.

Even though process computer failures of this type are very infrequent, it was decided to provide the most important system summary status and the most important control functions on an interface dedicated to the system and independent of the process computer.

The definition of the information items and controls to be included in the DOIs was based upon reviews of what information and controls for these systems are necessary in the event of computer failure. See Subsections 7.6.1.1.3 and 7.7.1.2.3(3) for the results of these reviews.

Outside of the DOIs, the dedicated switches on the main console are of two types. The first of these is utilized for emergency backup for the flat panel touch screen controls of equipment which is required to have emergency operation capability. Switches of this type are called "backup" switches. The second type of dedicated switch shall be used for system automation sequence initiation and is referred to as a "master" switch. In the case of both of these types of switches, the criteria for selection are discussed in Subsection 18.4.3.

Question 620.26

Computer-based work stations can often present data interface management problems to the operator (such as the operator spending too much time managing data windows rather than monitoring plant information) which reflect a shift from task-related workload to interface-management workload. Describe how the design of the work station controls and displays will minimize the workload associated with the operator's management of the interface. Discuss any assistance that the operator will have in calling up the appropriate displays via automatic display "triggers" or an expert system.

Response 620.26

The ABWR data interface is a touch screen which is characterized by its speed and simplicity of operation. Both flat panel displays and CRTs are equipped with the touch screens. The basic concepts of the CRT display format system are described in Subsection 18.4.2.2.

As discussed in the responses to Questions 620.23 and 620.28, a significant base of experience with touch screens has been accumulated both in this country and in Japan. Advantage has been taken of this experience along with the results of development testing done specifically for the ABWR. In addition, extensive prototype testing with BWR operators was done to validate the interface design.

Comprehensive operations analyses will be performed as a part of the equipment procurement to assure that no significant data interface management problem exists in the particular hardware implementation selected.

Question 620.27

It appears that alarm information is being presented in three separate locations: on the large display screen, on dedicated alarms and on CRTs. With respect to annunciator warning systems data, please discuss:

(1) How allocation of alarm information to the above locations is determined and which alarms are located where;

(2) How the CRT-based alarms will be presented;

(3) How alarm information will be prioritized;

(4) Whether alarm filtering will be used and, if so, (1) by what methods, and (2) whether operators will have access to filtered-out alarm data.

Response 620.27

The requirements for the alarm system are described in Subsection 18.4.5. This section contains discussions of alarm classification, alarm suppression and implementation of alarms in both hardware and software.

Question 620.28

Describe any trade studies and/or investigations which have been performed to support the selection of the approaches to display and control being planned for the control room, including, for example, the use of touch panel control for specific functions.

Response 620.28

There is significant international experience regarding the application of touch panel controls. As examples, Japanese BWRs have extensively employed touch screen CRTs on radwaste control panels extensively while, in the U. S., touch screen CRTs have been used in a variety of industrial process applications.

Further complementing that existing base of experience, research testing of touch screen technology was done in support of the ABWR design to determine the precision obtainable by the operators touching the screen from varying distances.

The results of these tests were then used as one of the design inputs to determine the ABWR main control console configuration.

Other areas for which research tests or evaluations were undertaken in support of the ABWR control room design are listed below:

- Requirements concerning man-machine interfacing
- New man-machine interfacing technologies

- Man-machine functions
- Alarm functions
- Control room panel layout & conceptual design of control rooms
- Functions & configurations of plant data management systems
- Basic algorithms for plant automation

These topics were discussed during the March 6-7, 1990, meeting with the NRC.

Validation tests of main control panel prototypes were also carried out with several experienced BWR operating crews. Comments from the operators were evaluated and used to modify the design, when appropriate.

Question 620.29

Describe how data protection and security will be assured.

Response 620.29

With regard to the process computer driven CRT displays, security measures are provided within the plant process computer to limit access to information, use of and changes to critical functions. Normally, access is controlled by user identification (password) and user location. Access may also be controlled by key lock.

Critical display and interactive control functions cannot be changed at the control console by the operator. Changes must be done at dedicated computer interface terminals under strict security control.

Within the above constraints, the following computer system access levels are generally provided:

(1) Read—view information at the terminal

(2) Write—enter data from the terminal

(3) Execute—run programs and command sequences from the terminal

Password controlled, user-identification changes shall be provided for different personnel to allow use of common terminals without the need for logging in and out.

Within the above constraints, authorized personnel shall have the capability to define access to each major function of the process computer. These authorized personnel shall use the security provided by the operating system as they deem appropriate.

Question 620.30

The control room will have only a single command workstation. Discuss why there is no back-up as recommended in the EPRI ALWR Chapter 10 requirements document. In addition, please discuss the following:

(1) Any loss of monitoring and control functions that have been analyzed, and their initiating events;

(2) Whether any single event could cause the loss of a major portion of the workstation and/or the loss of monitoring and control functions;

(3) The effects of the loss of one or two CRTs at the workstation including whether this could require too much information to be displayed at the remaining display devices;

(4) Whether awkward control/display relationships and awkward operations could result from the loss of any small section of the workstation.

Response 620.30

The EPRI ALWR Chapter 10 requirements specify triply redundant, compact operator work stations. The design basis for this approach is the postulated loss of a work station due to equipment failure or maintenance. In the event of a loss of one work station, the operator can move to the backup work station and continue operation.

The ABWR control room design provides multiple levels of control and display redundancy within an integrated main control console. This design, coupled with the redundancy and diversity of the plant instrumentation and control architecture, ensures a high availability of controls and displays. No single component failure or maintenance activity can result in a loss of control or display capability which will adversely affect plant operations. Thus, the availability of the ABWR design is at least equal to the availability of the design endorsed by the EPRI ALWR requirements.

Figure 18C.7-1, in the ABWR Standard Safety Analysis Report (SSAR), depicts an overall hardware configuration for the operator interface system in the main control room. For the safety systems, divisional system controllers communicate with the main control console and the wide screen display device. System control is organized in an hierarchy consisting of the system's automatic initiation logic with dedicated hardware switches for backup system initiation on the main control console, the system master sequential switches for control of different modes of a system, and control of individual equipment on the flat display panels. Display redundancy is provided by the dedicated large display panel (fixed mimic) which is safety qualified, the touch-screen flat display panels for each division and a CRT for safety system monitoring. Furthermore, the overall plant safety is provided by four separate divisions of essential systems. An entire division of equipment can be taken out of service for maintenance without compromising the capability of the other systems to respond when required. In the remote possibility of failure of all four divisions of safety control equipment at

the main control console, the plant can be shutdown at the remote shutdown system panel. The remote shutdown system utilizes conventional, hardwired, analog instrumentation and control to provide complete diversity from the advanced microprocessor control systems available in the main control room.

For the non-safety systems, the hierarchy of control structure is similar to that of the safety systems. The systems operate normally according to their designed automatic functions. System mode control is provided by the master sequential switches. Individual control of system equipment is possible on the touch-control CRTs and the non-safety flat display panels. System display capability is provided on these CRTs (which have a control mode and a monitoring mode), flat display panels, and on the large variable display panel. The plant process computer drives all the CRTs and the variable display panel. The normal method of plant control such as startup and shutdown is provided by an automation mode of plant process computer. The operator interfaces with the plant automation system through dedicated master sequential switches. When operating in the semi-automatic mode, the master sequential switches are used. The touch-control CRTs are utilized only when control of individual equipment is required. Flat panels driven separately from the process computer provide backup control and display capability for the non-safety systems in the unlikely event of failure of the entire process computer system. The process computer system itself has redundant processors so that a single processor failure will not result in loss of all CRTs and the variable display. In case of individual CRT failure, other adjacent CRTs can be used because any display can be accessed on any CRT. Awkward control/display relationships and awkward operations are avoided because of the touch control capability on the CRTs and the flat panels. In addition, any CRT display can be displayed on the large variable display panel.

In summary, the integrated main control console and large display panel are not one system driven by one system controller. Any single failure will not result in loss of all functions of the main control console nor the wide screen display panels. Control and monitoring redundancies are provided for both the safety systems and the non-safety systems at the main control console. The fixed mimic for the safety system and the variable display panel for the non-safety systems provide additional plant monitoring capability which compliments those provided by the CRTs and flat panels at the main control console Control redundancies are provided by the master sequential hardware switches for system mode control, touch control capability on the CRTs, and touch control capability on the flat panels. Furthermore, plant shutdown capability is provided by the remote shutdown system outside of the main control room. Therefore, a redundant control console for the ABWR is not appropriate nor required.

Question 620.31

Since there is only one workstation, and it is typically manned by a single operator, describe any analysis that have been performed to assure that the workstation can appropriately

accommodate two-person operations during accident scenarios. Please include the following in the discussion:

(1) How the responsibilities and tasks are laid out to assure well-coordinated two-person operations;

(2) Any function or task analyses that have been performed to assure that the two operators will not have unintended and unwanted interactions;

(3) How emergency operating procedures (EOPs) will account for one and two-person operations.

Response 620.31

The ABWR has only a single control console. However, this console is configured such that it will support operation by either one or two operators. The validation tests referred to in the response to Question 620.28 included tests to demonstrate the capability of the workstation to accommodate two operators. During these tests, it was demonstrated that two operators are able to work together in a well coordinated team effort.

During two person operations, the operators are normally assigned one to the NSSS and plant summary controls and displays and the other to the balance of plant controls and displays. Some flexibility in these assignments will, of course, be designed into the operating procedures. With this basic division of responsibility between the two operators, the interactions of functions are generally minimized. In the implementation of the ABWR design, function and task analyses for both one and two-person operation will be developed as part of the design implementation tests and evaluations to be performed, as discussed in Section 18.5 of the ABWR Standard Safety Analysis Report (SSAR).

The plant Emergency Operating Procedures will also be developed as part of the ABWR design implementation. Similarly, design implementation tests and evaluations to be performed, as discussed in Section 18.5 of the SSAR, will establish the necessary procedures to be implemented depending upon the particular number of operators stationed at the control console (if relevant).

Question 620.32

Although an advanced computer-based control room is planned, the design of the remote shutdown panels will be based upon conventional hardware (e. g., hard control devices, analog indicators, etc.). Based upon the March 6-7, 1990 presentation by G. E., it appears that this diversity was a design goal. Discuss the technical basis for this approach, including the human factors implications such as:

(1) Likely confusion due to the differences between operations in the control room and at the RSP;

(2) Increased training burden and operator burden associated with the need to learn two different systems, one of which will be used constantly and the other very infrequently, if ever.

Response 620.32

The ABWR Remote Shutdown System (RSS) employs conventional, hardwired, analog monitoring, control and logic devices to maintain complete diversity from the main control room. In addition to providing an alternate shutdown station in the event of a control room evacuation, the diversity provided by the RSS protects against the improbable event of a common mode hardware or software failure in the plant instrumentation and control systems.

This difference between the RSS and control room man-machine interface (MMI) designs is typical of all BWRs. Even if control and display devices were incorporated into the RSS which were similar to those used in the main control room, the overall MMI design would be quite different because of the limited scope of operations performed at the RSS panels.

Operation of the RSS will be confirmed as a part of the plant Power Ascension Test Program. This testing will include a review of the human factors aspects of the RSS design. During plant operation, appropriate training and periodic drills will maintain the operators' proficiency in RSS operation. This training would be required regardless of the type of display and control devices employed in the RSS design. Furthermore, since the RSS operations are relatively simple, this training should not be an undue burden on the operator.

Question 620.33

Describe the design of the other local control panels, given the dual approach discussed above.

Response 620.33

The primary user of other local equipment control panels will be the plant equipment operations and maintenance staff and not the control room operations staff. The man-machine interface design of these other local equipment control panels will be defined as part of the ABWR design implementation equipment procurement activities. Depending upon such factors as the user interface needs and equipment requirements, these local control panels may contain a mixture of software driven and conventional displays and controls.

Question 620.34

Discuss the technical basis for the design of local valve operations, including the determination of local vs. control room position indications.

Response 620.34

The ABWR design philosophy regarding local valve operations is similar to previous BWR designs. Operated valves will be provided with local position indication and parallel control room position indications will be provided, as determined to be appropriate, based upon operator interface task analyses.

Question 620.35
Discuss how TMC operations are changed in the design of the ABWR when compared with a standard BWR.

Response 620.35
The ABWR has extensively incorporated the use of advanced digital electronics in the design of the plants instrumentation and controls, as described in Chapter 7 of the ABWR Standard Safety Analysis Report (SSAR). With the use of such advanced digital equipment, standard test, maintenance and calibration operations are significantly enhanced. Automated equipment calibration, self-test and diagnostic functions can be performed very quickly and at great precision. Equipment maintenance and repair activities are made easy through the use of the built-in equipment diagnostic function and use of field replaceable electronics based modules which can be simply slipped in and out of the equipment chassis.

Question 620.36
Discuss the criteria used to determine which instrumentation will be manually calibrated.

Response 620.36
As discussed in the response to Question 620.35, the ABWR has extensively incorporated advanced digital technologies. One of the benefits of utilizing this advanced digital design is that many calibration functions can now be automated. The ABWR design philosophy is to apply automated calibration functions wherever practicable. No specific criterion has been developed which defines instrumentation that must be manually calibrated. Examples of instrument calibration functions which are required to be automated in the ABWR design include calibration of the in-core Local Power Range Monitor and calibration of process sensor data acquisition and signal conditioning channels.

Examples of instrumentation which may need to be manually calibrated include standard process instruments such as pressure transducers. A complete definition of which calibration functions will be done manually and which are automated will be obtainable as an output of the ABWR design implementation.

Question 620.37
Discuss the criteria used for the selection of computerized test operations.

Response 620.37
Referring to the responses to Questions 620.35 and 620.36, another of the significant benefits of advanced digital technologies is that surveillance and diagnostic tests can be automated. Again, the ABWR design philosophy is to apply automated test functions to the maximum extent practicable. The decision to incorporate automated self-test functions is made on a case-by-case basis and no generic criterion is applied. Chapter 7 of the ABWR Standard Safety Analysis Report (SSAR) contains a discussion of the particular automated self-test functions which have been incorporated in the ABWR design (e. g., See Section 7.1.2.1.6 of the SSAR for discussion of Protection System testing, including automated self-test functions). In general,

systems which perform functional logic by means of programmed digital logic (i.e., microprocessors) will inherently contain self-test functions.

Other automated self-test functions (i.e., at the level of equipment specific design detail) will be considered as part of the ABWR design implementation.

Question 621.1

Identify who performed the ABWR HRA (GE and/or other contractors), and describe the expertise that was included in the HRA team.

Response 621.1

Response to this Chapter 19 question not part of DCD (See SSAR Subsection 20.3.14).

Question 621.2

Describe the material and/or analysis that were available and used to support the HRA, including:

(1) Detailed function and task analysis (utilizing the ABWR staffing goals and staffing philosophy);

(2) Procedures or procedure guidelines (draft or preliminary, etc.);

(3) Control room design;

(4) Work station design;

(5) Display design; and

(6) Any other.

Discuss the degree of completeness of each of the materials used in terms of the ABWR design to support the HRA.

Response 621.2

Response to this Chapter 19 question not part of DCD (See SSAR Subsection 20.3.14).

Question 621.3

As per Chapter 19 of the SSAR, the HRA methods and procedures identified as used in performance of the ABWR HRA were THERP (Technique for Human Error Rate Predictions, NUREG/CR-1278) and SHARP (Systematic Human Action Reliability Procedure, EPRI NP-3583). Identify which HEPs were derived by each HRA method, and describe any other methods that were used to support these approaches.

Response 621.3

Response to this Chapter 19 question not part of DCD (See SSAR Subsection 20.3.14).

Question 621.4
For those HEPs where THERP was used, describe how the Swain and Guttmann Handbook was actually applied in the following areas:

(1) Whether the full analysis methodology was followed;

(2) How base case HEPs were derived;

(3) The data which were used as the source of base case values;

(4) The performance-shaping factors that were applied.

Response 621.4
Response to this Chapter 19 question not part of DCD (See SSAR Subsection 20.3.14).

Question 621.5
Chapter 19 (p. 19.3-1) states that the HEPs "were taken predominately from the GESSAR II PRA" and that "most of these values were derived from the Swain and Guttmann Handbook of Human Reliability" which as referenced was published in 1983. However, the GESSAR II PRA was published in 1982, one year prior to the publication of NUREG/CR-1278. In light of this, please identify the version of the Swain and Guttmann Handbook of Human Reliability (NUREG/CR-1278) that was used.

Response 621.5
Response to this Chapter 19 question not part of DCD (See SSAR Subsection 20.3.14).

Question 621.6
For those HEPs for which SHARP was used, please provide the documentation called for in the procedure, or, if this approach was not used, please describe how SHARP was actually applied.

Response 621.6
Response to this Chapter 19 question not part of DCD (See SSAR Subsection 20.3.14).

Question 621.7
Chapter 19 states that "more recent studies suggest that these values may be somewhat conservative" (p.19.3-1). Discuss those studies that are used to support this statement, and describe how they apply to ABWR operations.

Response 621.7
Response to this Chapter 19 question not part of DCD (See SSAR Subsection 20.3.14).

Question 621.8
As indicated above, Chapter 19 (p. 19.3-1) states that the ABWR HEPs "were predominantly taken from the GESSAR II PRA for which they were collected from various other sources and modified, as appropriate, for the GESSAR application" and that their "application in the

ABWR PRA is judged to be acceptable". With respect to this statement, please discuss the following:

(1) The other sources and methods that were used to derive those HEPs. (Reference is made to "the EPRI time-reliability correlation" on p. 19I.4-1— does this refer to the Human Cognitive Reliability (HCR) study?);

(2) If the HCR study was used in support of the HRA, please provide a report of the study to support the evaluation;

Response 621.8

Response to this Chapter 19 question not part of DCD (See SSAR Subsection 20.3.14).

Question 621.9

Describe how you accounted, in the HRA, for the use of new, advanced technology in the control room and for the differences in the operator's role in the ABWR vs. a standard control room. That is, how is the operator's role change (due to the introduction of compact work stations and advanced I & C with primary reliance on human-computer interface technology) accounted for in the analysis, with regard to the following:

(1) The appropriateness of the use of numbers from NUREG/CR-1278 for use in the ABWR;

(2) The manner in which HRA subjective judgement was used given the advanced (and different) nature of the control room:

(3) The methods and the experts that were available to modify HEPs for ABWR operations;

(4) Any design features of the ABWR that were used as a basis to lower HEPs which had been obtained from an earlier PRA and, if so used, a discussion of which errors were involved and what technology was assumed to enhance operator performance.

Response 621.9

Response to this Chapter 19 question not part of DCD (See SSAR Subsection 20.3.14).

Question 621.10

The introduction of new advanced technology has frequently been associated with the emergence of new human errors. Describe how the ABWR HRA has specifically analyzed the advanced control room, changes in staffing philosophy, etc., to identify potential "new" errors introduced by differences between the ABWR and previous product designs, and which human errors were included in this category. If this has not been done, please discuss your intentions in this regard.

Response 621.10

Response to this Chapter 19 question not part of DCD (See SSAR Subsection 20.3.14).

Question 621.11

In summary, given that a variety of source documents were used, please provide an audit trail for each, describing:

(1) The task analysis used;

(2) The PRA which was originally used to provide an HEP;

(3) The method that was use to derive the HEP;

(4) How the HEP was modified for use in subsequent PRAs (such as from Limerick to GESSAR to ABWR), and how design, procedures and operations differences were accounted for;

(5) For which HEPS screening values were used;

(6) Which HEPs were specifically modified for the ABWR.

Please provide the HRA documentation to support the review.

Response 621.11

Response to this Chapter 19 question not part of DCD (See SSAR Subsection 20.3.14).

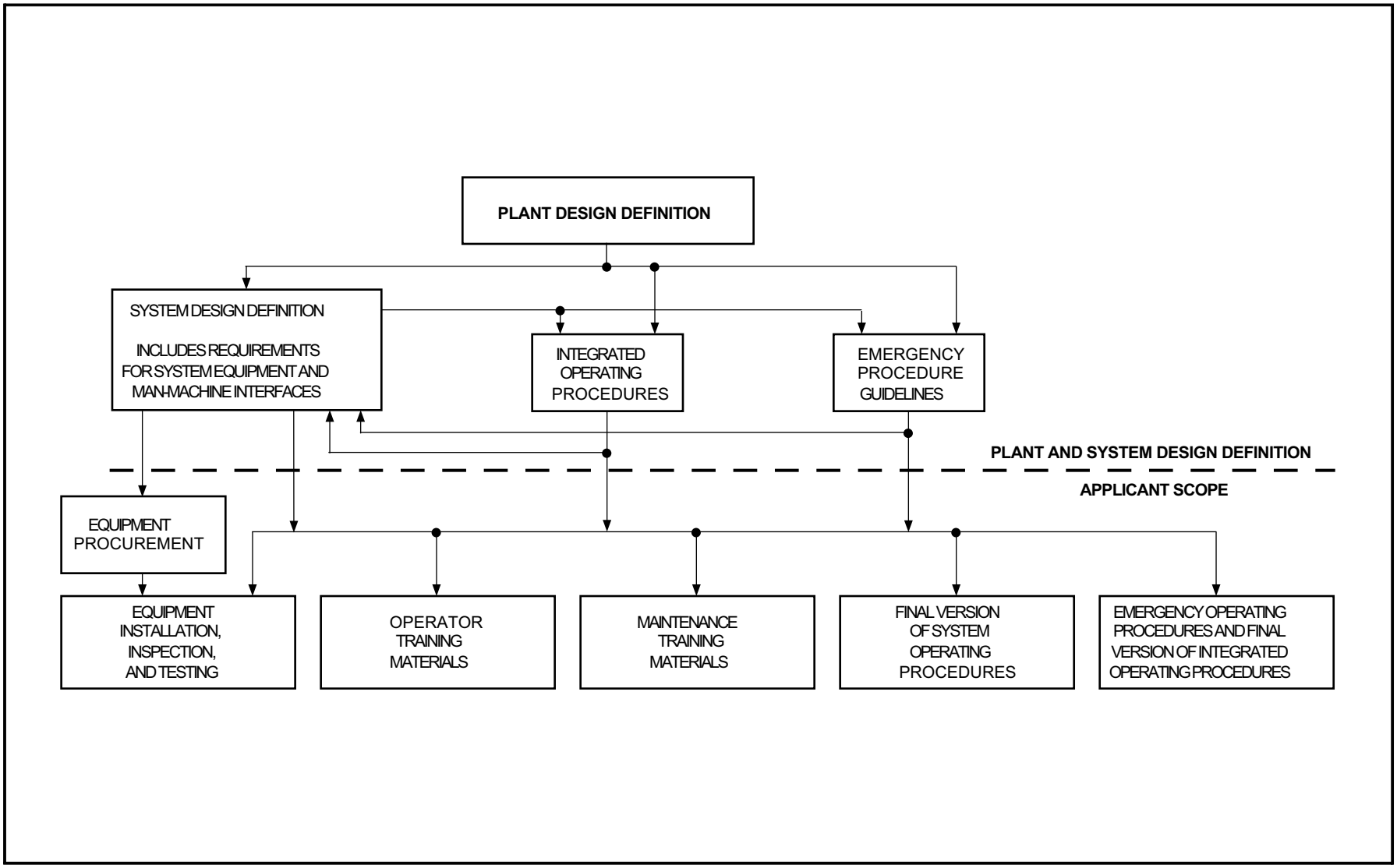

Figure 20.3.14-1
Relationship of System Training Material Preparation to Other Plant Design and Procurement Activities (Response to Question 620.8)

20.3.15 Response to Fifteenth RAI — Reference 15

Question 430.177

ABWR SSAR Section 9.1.1.1.1, Nuclear Design, states that since no credit is taken for neutron leakage, the value for effective multiplication factors are really infinite neutron multiplication factors. ABWR SSAR Section 9.1.1.3.1, Criticality Control, states that k_{eff} for both normal and abnormal storage conditions will be less than or equal to .95. However, the same section states that the new fuel storage area will accommodate fuel with a $k_{inf} < 1.35$ with no safety implications. Resolve this discrepancy. (9.1.1)

Response 430.177

The fuel storage racks are capable of storing fuel which has an infinite lattice k_{inf} of 1.35, calculated in the uncontrolled reactor core geometry at 20°C. The storage rack geometry reduces this k_{inf} to less than 0.95 in the storage rack. Subsection 9.1.1.3.1 has been changed accordingly.

Question 430.178

ABWR SSAR Section 9.1.1.1.6, Dynamic Analysis, refers to ABWR SSAR Section 9.1.2.1.6, which does not exist. Provide the results of a dynamic analysis of the new fuel storage system. (9.1.1)

Response 430.178

Response to this question is provided in revised Subsection 9.1.1.1.6.

Question 430.179

ABWR SSAR Section 9.1.1.1.7, Impact Analysis, also refers to a nonexistent ABWR SSAR Section 9.1.2.1.7. Provide impact analysis for *impact* loads up to and including a fuel assembly and its carrying fixture. (9.1.1)

Response 430.179

Response to this question is provided in revised Subsection 9.1.1.1.6. (Note: Subsection 9.1.1.1.7 has been deleted).

Question 430.180

Provide details of assumptions and input parameters used in the criticality analysis for new fuel storage. Include information such as number of racks, their material (e. g., stainless steel?), number of fuel assemblies per rack, neutron-absorbing material and its placement, placement of fuel assemblies (center-to-center distance between rows and within rows), and effect of spacing on k_{eff} in normal dry condition or when completely flooded with water. Also, clarify whether the spacing is sufficient to ensure a k_{eff} of 0.98 or less under optimum moderator conditions (foam, small droplets, spray or fogging) as described in SRP Section 9.1.1. Clarify whether the racks are designed to preclude inadvertent placement of a fuel assembly in other than prescribed locations. (9.1.1)

Response 430.180
Response to this question is provided in revised Subsection 9.1.1.1.1.

Question 430.181
How is the new fuel protected from internally generated missiles and the effects of moderate or high energy piping or rotating machinery in the vicinity of the vault housing the new fuel storage racks. (9.1.1)

Response to 430.181
Response to this question is provided in revised Subsection 9.1.2.

Question 430.182
Provide information on how the design of the new fuel storage facility complies with GDC 61, "Fuel Storage and Handling and Radioactivity Control." Identify the ventilation system provided to handle possible release of radioactivity resulting from accidental damage to the fuel (note that ABWR SSAR 7.1 does not describe the radiation monitoring equipment for the new fuel storage area as stated in ABWR SSAR Section 9.1.1.2). (9.1.1)

Response to 430.182
Response to this question is provided in revised Subsection 9.1.2.

Question 430.183
Provide sufficient information and drawings to determine that the failure of non-seismic systems and structures in the vicinity of the new fuel storage facility can not cause an unacceptable increase in k_{eff}. (9.1.1)

Response to 430.183
Response to this question is provided in revised Subsection 9.1.2.

Question 430.184
Demonstrate that the analyzed impact of a fuel assembly, including its associated handling tool, dropped from a height of 6 feet bounds the range of all possible load drops from all possible heights. For additional guidance on the required bounding analysis, see SRP Section 9.1.2, Item III.2.e.(9.1.2)

Response to 430.184
As discussed near the end of Subsection 9.1.4.3, light loads such as the blade guide, fuel support casting, control rod or control rod guide tube weigh considerably less than a fuel bundle and are administratively controlled to eliminate the movement of any light load over the fuel pool above the elevation required for fuel assembly handling. Thus, the kinetic energy of any light load would be less than a fuel bundle and would have less damage induced.

Question 430.185
Provide sufficient information and drawings to determine that the failure of non-seismic systems and structures in the vicinity of the spent fuel storage facility can not cause an unacceptable increase in k_{eff}. (9.1.2)

Response to 430.185
Response to this question is provided in revised Subsection 9.1.2.2.

Question 430.186
Provide drawings and information pertaining to spent fuel transfer canal capability of the fuel transfer canal or other provisions to prevent a dropped shipping cask from causing an unacceptable loss of pool water.(9.1.2)

Response 430.186
Response to this question is provided in revised Subsection 9.1.2.2.

Question 430.187
Clarify whether there is a) an interconnecting fuel transfer canal capable of being isolated from the fuel pool and adjacent cask loading area, and b) any high-energy piping or rotating machinery in the vicinity of the fuel storage pools. Also, clarify whether the racks are designed to preclude inadvertent placement of a fuel assembly in other than prescribed locations.(9.1.2)

Response 430.187
Response to this question is provided in revised Subsection 9.1.2.2.

Question 430.188
Describe the function of the containment pool mentioned in ABWR SSAR Section 9.1.2.1.5. (9.1.2)

Response 430.188
Subsection 9.1.2.2(3) has been changed to omit mention of a containment pool.

Question 430.189
What is the seismic category of the gates in the pools? (9.1.2)

Response 430.189
The gates between the spent fuel pool and other pools are all Seismic Category I.

Question 430.190
Instead of referring to a specific GE proprietary report on criticality control for spent fuel storage (see ABWR SSAR Section 9.1.2.3.1), provide details of assumptions and input parameters used in the criticality analysis of the spent fuel storage. Also provide the uncertainty value and associated probability and confidence level for the k_{eff} value determined by the analysis. Include information such as number of fuel assemblies stored in the pool, center-to-center spacing between fuel assemblies, material of the racks, neutron absorber used and its

placing, and k_{eff} for the above condition when the storage is fully loaded and flooded with non-borated water. (9.1.2)

Response 430.190

Response to this question is provided in revised Subsection 9.1.2.3.1.

Question 430.191

List the specific provisions included in the design of the spent fuel pool to comply with GDC 63, "Monitoring Fuel and Waste Storage" (e.g., pool liner leakage detection, water level monitoring and radiation monitoring systems). Identify the corrective actions on detection of loss of decay heat removal capability or excessive radiation levels. Note that for radiation monitoring systems, additionally referencing ABWR SSAR Subsections 11.5.2.1.2.1 and 11.5.2.1.3, if they are applicable, in ABWR SSAR Subsection 9.1.2.4 is sufficient. (9.1.2)

Response 430.191

Subsection 9.1.2.4 has been revised to reference Subsection 9.1.3 for the description of the pool liner leakage detection system and water level monitoring system. Subsection 9.1.2.4 has also been revised to reference Subsections 11.5.2.1.2.1 and 11.5.2.1.3 for a description of the radiation monitoring systems.

Subsection 9.1.2.4 has been revised to reference Subsection 9.1.3 for the corrective action for loss of decay heat removal capability and Subsections 11.5.2.1.2.1 and 11.5.2.1.3 for the corrective actions for excessive radiation levels.

Question 430.192

Provide the results and conclusions of the load drop analysis which considers dropping of one fuel assembly and its associated handling tool from a height at which it is normally handled above the spent fuel storage racks. ABWR SSAR Subsection 9.1.4.3 does not discuss compliance with GDCs 61 and 62; therefore, discuss the above compliance for the light load handling system. (9.1.4)

Response to 430.192

Response to the load drop analysis portion of this question is provided in revised Subsection 9.1.4.3. Compliance with GDC 61 and 62 are discussed in Subsections 3.1.2.6.2.2.1 and 3.1.2.6.2.2.2, respectively.

Question 430.193

A "slack cable" signal (ABWR SSAR Section 9.1.4.3) is not considered sufficient indication of a fully seated assembly. Discuss whether positive vertical position indication will also be provided. (9.1.4)

Response 430.193
In addition to the slack cable signal, the elevation of the grapple is continuously indicated. Also, after the grapple is disengaged, the position of the upper part of the fuel bundle can be observed using television.

Question 430.194
ABWR SSAR Subsection 9.1.4.2.2.1, Reactor Building Crane, indicates that the crane can be used to move new fuel to the spent fuel pool and is also used to handle the spent fuel cask over the spent fuel pool and results of a failure modes and effects analysis demonstrating the adequacy of controls and interlocks to prevent compromising criticality or radiological safety. (9.1.4)

Response 430.194
The reactor building crane main hook is used to move the spent fuel cask, and the auxiliary hook is used to move new fuel from the new fuel vault to the spent fuel storage pool. Interlocks and procedures prevent the main hook of the reactor building crane, while carrying a heavy load, to traverse over the spent fuel pool or the new fuel storage vault.

As discussed in Section 15B.1, FMEAs are provided for two ABWR systems and one major component which present a significant change from past ABWR designs. Specifically, FMEAs are included in Appendix 15B for:

(1) Control rod drive systems (with emphasis on the fine motion control rod drive),

(2) Essential multiplexing system, and

(3) Reactor internal pump.

Regulatory Guide 1.70 requires FMEAs to be performed on selected subsystems of Chapter 6, 7 and 9. However, GE considers that the plant nuclear safety operational analysis (NSOA) of Appendix 15A and the probabilistic evaluations of Appendix 19D adequately address single failures for those systems and components which are similar to past BWR designs. Since the designs of the ABWR reactor building crane is similar to past designs, GE believes that it is unnecessary to perform a FMEA on the reactor building crane.

Question 430.195
Clarify whether the system design includes interlocks (1) to ensure correct sequencing of the transfer operation in the automatic or manual mode, and (2) to prevent the refueling platform and the fuel handling platform moving in the transfer area during operations of the transfer system so that the transfer system will not be adversely affected by the presence of either platform. (9.1.4)

Response 430.195
Interlocks shall be provided to ensure correct sequencing of the transfer operation in the automatic or manual mode.

The terminology of the various platforms has been clarified in the response to Question 430.198a.

Question 430.196

ABWR SSAR Tables 3.2-1 (page 3.2-28) and 9.1-2 differ in seismic classification identification for some fuel servicing equipment. Correct the discrepancy as appropriate. (9.1.4)

Response 430.196

Table 9.1-2 has been changed to state that the seismic category of the fuel preparation machine is non-seismic to agree with Table 3.2-1.

Question 430.197

Provide an enlarged legible version of ABWR SSAR Figure 9.1-12, "Plant Refueling and Service Sequence". (9.1.4)

Response 430.197

Figure 9.1-12 has been enlarged.

Question 430.198

ABWR SSAR Section 9.1.4 is confusing on the following details: (9.1.4)

(1) ABWR SSAR Subsection 9.1.4.2.3.7 and 9.1.4.2.3.8 refer to a fuel handling platform; but it is not described anywhere under that caption. It is not clear what constitutes the fuel handling platform and whether it is distinct from the refueling platform.

(2) ABWR SSAR Table 9.1-10 refers to three single-failure-proof cranes: the reactor building crane, refueling bridge crane and fuel handling jib crane. ABWR SSAR Subsections 9.1.4.2.7.1 and 9.1.4.3 refer to the automatic refueling machine (a gantry crane) and the spent fuel handling crane. It is not clear which of the above descriptors mean the same load handling device.

(3) Different subsections in ABWR Section 9.1.4 refer to the fuel storage pool, reactor building fuel storage pool, fuel pool and spent fuel pool. It is not clear whether all the above descriptors mean the spent fuel pool. Provide clarification on all the above. Also, provide layout drawings for all the storage pools, including the upper pool and the transfer canal.

Response 430.198

(1) The following terminology will now be used in the ABWR SSAR:

The "refueling platform" is mobile and moves between the reactor well pool and the spent fuel pool.

The "auxiliary platform" is stationary and located at the reactor vessel flange.

The "under vessel platform" is located under the reactor vessel and can be rotated.

(2) Table 9.1-10 and Subsection 9.1.4 have been changed to use the following terminology for the single-failure-proof cranes.

(a) Reactor building crane

(b) Refueling platform crane

The jib crane has been deleted because its function will be performed by an auxiliary hoist on the reactor building crane.

(3) Subsection 9.1.4 has been changed to use only the term spent fuel pool when referring to the pool where spent fuel is stored. The relationship between the various pools is shown in Figures 1.2-2 and 1.2-11. The transfer canal is that part of the spent fuel pool at an elevation of T. M. S. L. 23700 between the reactor well pool and the deeper part where the spent fuel is stored.

Question 430.199

Include the single-failure-proof characteristics of all cranes used in light load handling (note that ABWR SSAR Subsection 9.1.4.1 mentions only hoists on the refueling platform). (9.1.4)

Response 430.199

Only hoists are required on the ABWR for light load handling.

Question 430.200

ABWR SSAR Subsection 7.6.1 does not provide an evaluation of the radiation monitoring equipment for the refueling and service equipment as stated in ABWR SSAR Subsection 9.1.4.5.4. Provide the above information. If it is covered by some other radiation monitoring systems (e. g., area radiation monitoring system and/or process and effluent monitoring system or both), include reference to those systems and the applicable SSAR Sections in SSAR subsection 9.1.4.5.4. (9.1.4)

Response 430.200

Subsection 9.1.4.5.4 has been changed to identify the radiation monitoring equipment and reference where it is described.

Question 430.201

The interface criteria of ABWR SSAR Section 9.2.15 does not include the required interface criteria for the design of the potable and sanitary water system. To meet the requirements of GDC 60, the design of this system should not allow for interconnections between the potable and sanitary water system and systems having the potential for containing radioactive materials. Protection should be provided through the use of air gaps, where necessary. Add these design criteria, as interfaces, under ABWR SSAR Section 9.2.15. (9.2.4)

Response 430.201
The interface requirements for the potable and sanitary water system of Subsection 9.2.4 has been added as new Subsection 9.2.17.3. One of these requirements will be the use of air gaps, where necessary, to prevent intrusion of radioactive materials into the potable and sanitary water system.

Question 430.202
Include the following interfaces besides what have been already specified for ensuring the ultimate heat sink (UHS) capability: (1) Design to accommodate single failures of passive components in electrical systems. (2) Protection of safety-related portions from adverse environmental conditions including those resulting from piping failures. (3) Time duration of UHS cooling capability availability. (9.2.5, 9.2.15)

Response 430.202
Subsection 9.2.15 has been changed to discuss the following:

(1) Single failures of passive components in electrical systems will be discussed. These failures will lead to the loss of the affected pump, valve or other component and the partial or complete loss of cooling capability of that division. However, all safety-related heat rejection systems are redundant so that the essential cooling function can be performed even with the complete loss of one division.

(2) Safety-related portions of the UHS shall be protected from adverse environmental conditions including those resulting from piping failures by locating such components in a Seismic Category I building and providing flood protection in case of piping failures.

(3) The time duration of UHS cooling capability availability is thirty days.

Question 430.203
The ultimate heat sink heat load requirements are identified by reference to ABWR SSAR Table 9.2-4. This set of three tables (9.2-4a, 9.2-4b and 9.2-4c) identifies heat loads for each of the three reactor building cooling water divisions. These tables do not consider the case of a reactor shutdown at 4 hours after a blowdown to the main condenser. Inclusion of the above may require a higher heat load dissipation capability for the UHS than what has been currently estimated (see GE's response to Question No. 440.73). Revise the tables as appropriate considering the above case and provide the heat load requirements based on the revised tables for the ultimate heat sink (e. g., the sum of the heat loads for all three divisions, 2 of 3). Are there additional heat loads associated with the UHS not carried by the reactor building cooling water system? (9.2.5)

Response 430.203
Tables 9.2-4a, 9.2-4b and 9.2-4c were changed in Amendment 14 to list the heat loads for the case of a reactor shutdown at 4 hours after a blowdown to the main condenser.

Subsection 9.2.15 has been changed to discuss the heat load dissipation capability of the UHS during the cases of reactor shutdown at 4 hours after blowdown to the main condenser and LOCA.

There are no additional heat loads of the UHS that are not carried by the RCW system.

Question 430.204

The requirements of 10CFR52 include the need for a conceptual design for systems not considered to be within the design scope of a standard nuclear power plant. No such conceptual design has been included as part of the ABWR SSAR for either the UHS or the interfacing service water system. Provide conceptual designs for the UHS and the interfacing service water system. (9.2.5)

Response 430.204

Response to this question is provided in revised Subsection 9.2.5 and 9.2.17.1.

Question 430.205

The make-up water preparation system is identified as outside the scope of ABWR standard plant. This system should meet the requirements of Position C.2 of Regulatory Guide 1.29. Provide an interface requirement that the failure of the make-up water preparation system will not result in the failure of any safety-related structure, system or component. (9.2.8)

Response 430.205

The make-up water preparation system will be located in a building that does not house any safety-related structures, systems or components. Interface requirements, including flood protection measures for the make-up water preparation system are discussed in Subsection 9.2.17.

Question 430.206

Clarify how the turbine building cooling water (TCW) system meets Regulatory Guide 1.29, Position C.2 with respect to seismic requirements for non-safety-related systems that due to their failure during seismic events may adversely impact structures, systems or components important to safety. (9.2.14)

Response 430.206

Parts of the TCW system are located in the turbine building. All safety-related systems in the turbine building are located in special areas to prevent any damage from non-safety-related systems during seismic events. The parts of the TCW system outside the turbine building are located away from any safety-related systems.

Question 430.207

For the TCW system, provide information on the following items: (9.2.14)

(1) Effect of any system component failure including rupture of the atmospheric surge tank on structures, systems or components important to safety.

(2) Required total cooling water flow and available cooling water flow; total heat output by turbine building auxiliary equipment and available capacity of the TCW heat exchangers.

(3) Power cycle heat sink to which the heat from the TCW system is rejected.

Response 430.207

(1) All TCW components are located in the turbine building. Systems important to safety in the turbine building are physically separated from TCW system components. Failure of any component, including the atmospheric surge tank, will not affect any system important to safety.

(2) The TCW system has been changed from three 50% pumps and heat exchangers to two 100% pumps and heat exchangers. The required TCW flow is 5452 m^3/h and there are two pumps with a capacity of 6587 m^3/h each. The total heat to be removed is 111.8 GJ/h and there are two heat exchangers with heat removal capacity of 137.6 GJ/h each.

(3) Heat from the TCW system is rejected to the power cycle heat sink.

Question 430.208

The system diagrams lack sufficient detail to ascertain whether or not connections between the TCW system and safety-related water systems exist. Provide assurance that no such connections to safety-related-systems are provided or identify such connections and the isolation capabilities provided. Isolation capabilities should include the use of equipment that is at least Quality Group C and Seismic Category I. (9.2.14)

Response 430.208

There are no connections between the TCW system and safety-related water systems.

Question 430.209

Only ABWR SSAR Sections 6.2-5 and 6.7 discuss the Atmospheric Control System (ACS) and High Pressure Nitrogen System (HPINS); therefore, correct SSAR Section 9.3.1 which refers to the wrong SSAR sections for discussion of the above systems. Also, provide information on the following items for the ACS:

(1) Clarification on applicability of system design criteria 9, 10, and 11 (protection against single active component failure, missiles, dynamic effects due to piping failures, tornado-missiles, flooding and seismic events) to all non-safety class system components (e.g. nitrogen storage tanks, vaporizers, applicable valves and piping, and instrumentation). (For these criteria, see SSAR Subsection 6.2.5.1). Specify, if some of the design bases for the ACS identified in Subsection 6.2.5.1 are applicable only for the safety-related components of the system, correct the subsection as appropriate.

(2) Justification for location of the inboard primary containment isolation valves outside the containment, which is a deviation from GDC 56, "Primary Containment Isolation. "The affected lines are (1) 2-inch N_2 makeup lines to the drywell and wetwell, (2) 22-inch purge suction lines to the drywell and wetwell (used for primary containment inerting or de-inerting and connected to a common 16-inch N_2 supply line), and (3) 2-inch and 22-inch purge exhaust lines from the drywell and wetwell. We find your response to Question Nos. 430.35 and 430.42 does not include justification for deviation from GDC 56 requirements for the above lines nor deviations from GDC 56 or 55, "Reactor Coolant pressure Boundary Penetrating Containment" requirements for other applicable lines. Include justification for deviations from applicable GDC for other lines listed in ABWR SSAR Table 6.2-7.

(3) SSAR Subsection 6.2.5.2.7, which discusses the Flammability Control System (FCS), does not provide sufficient details for us to conclude that the system complies with the requirements of TMI Action Item II.E.4.1, "Dedicated Hydrogen Penetrations" of NUREG-0737. Therefore, include the system in Table 3.2-1 and provide details such as; how long after LOCA and at what concentration level of hydrogen the recombiner has to be activated; line sizes as related to flow requirements; and duration of recombiner operation. Also, identify interface requirements for referencing applicants with regard to the external recombiners (e.g. development of procedural provisions to assure availability of possibly shared portable hydrogen recombiners between sites on a timely basis and coordination of surveillance programs in accordance with SRP 6.2.5 acceptance criterion II.12).

(4) ABWR SSAR Tables 6.2-7 and 6.2-8 give a line size of 4 inches and 6 inches respectively for the FCS return line; Table 6.2-7 and Figure 6.2-40 show location of FCS primary containment inboard isolation valves inside the containment and outside the containment respectively; SSAR Sections 6.2.5.2.7 and 19.A.2.12 indicate portable and permanently installed recombiners, respectively. Resolve all the above inconsistencies. Also, of the location of all the primary containment isolation valves for the system is outside the containment, justify the deviation from the GDC 56 requirement for the system inboard isolation valves. (9.3.1)

Response 430.209

Subsection 9.3.1 has been corrected per Amendment 11. Responses to other supplemental questions are as follows:

(1) The ACS components are located inside the Seismic Category I reactor building, except the nitrogen supply equipment such as nitrogen storage tank and vaporizers, which are outside the reactor building. ACS primary containment penetrations up to and including the second isolation valves are Seismic Category I consistent with the primary containment design. Isolation valves are powered from independent electrical divisions to meet single failure criteria. The reactor building is designed to

withstand and protect equipment from tornadoes, missiles, floods and other natural phenomena. ACS components outside the reactor building are not designed to meet the above mentioned system design criteria. Subsection 6.2.5.1 has been clarified.

(2) GDC 55 and GDC 56 require primary containment penetrations be provided with two redundant isolation valves (one inside and the other outside). ACS does not have primary containment penetrations that communicate to the reactor pressure vessel and is, therefore, not part of the Reactor Coolant Pressure Boundary. ACS penetrates the primary containment and communicates with the containment and drywell atmospheres. These penetrations do not explicitly meet GDC 55 and GDC 56 since both isolation valves are outside the primary containment. ACS primary containment penetrations do not extend inside the containment, thus provision for inboard isolation valve is not practical. Also, location of a valve inside the containment would subject it to a more severe environment and would not be easily accessible for inspection, surveillance testing and maintenance. This deviation from GDC 55 and GDC 56 has been reviewed for BWR6 and accepted by the NRC staff.

Other lines penetrating the primary containment listed in Table 6.2-7 which do not explicitly meet applicable GDC's (e.g. instrument lines) have also been reviewed and accepted by the NRC Staff. Details of the review evaluation result is reflected in GESSAR II Safety Evaluation Report, NUREG-0979 and Supplement 1, Docket No. 50-447.

(3) FCS has a dedicated penetration connected to two redundant (parallel) externally located recombiners. The FCS primary containment isolation valves are powered from two independent electrical divisions. The two safety-related recombiners are permanently installed in the reactor building.

The FCS is sized such that the flow requirements to the recombiners are satisfied. Flow of process and recirculation gasses are controlled and monitored by a flow metering device. One recombiner is required to perform the recombination function. Failure of the recombiner to achieve flow and operating temperature will result in manual actuation of the redundant recombiner. Per EPG, the recombiner is manually actuated from the main control room when the hydrogen concentration in the primary containment reaches about 4 percent by volume. The recombiner is designed to operate continuously for 60 days and, in the event of core damage, would be expected to operate at least intermittently until containment is no longer isolated.

Table 3.2.-1 has been corrected per Amendment 12.

(4) Table 6.2-8 and Figure 6.2-40 are correct. FCS suction and return lines penetrating the primary containment are nominal 10.16 cm and 15.24 cm pipes respectively. Both inboard and outboard isolation valves of each of the two primary containment penetrations are located outside. Table 6.2-7 has been corrected.

FCS hydrogen recombiners are permanently installed inside the reactor building. Subsection 19A.2.12 is correct. Subsection 6.2.5.2.7 has been corrected.

FCS primary containment penetrations deviate from GDC 56 since the location of the inboard and outboard isolation valves are outside the containment. The justification for this design is the same as in item (b) above.

Question 430.210

Clarify which portions of the high pressure nitrogen gas supply system (nitrogen storage bottles, system piping including tie lines between safety-related divisions and non-safety-related division, valves, instrumentation and controls) are safety-related. (9.3.1, 6.7)

Response 430.210

The safety-related portions of the HPIN system are:

(1) The nitrogen storage bottles and their headers,

(2) The piping and valves from F002A, B, C and D to ADS accumulators,

(3) The piping up to and including valves F012A and B,

(4) Valves F200 and F208 and the piping between them and

(5) The following instruments and controls: PIS001A and B and PT002A and B.

The non-safety-related portions are:

(1) The piping, valves and filters from the AC and IA interfaces to, but not including, valves F200 and F012A and B,

(2) The following instruments and controls: DPS003, PT004, PT005 and the pressure signal for PCVF215.

The signals from PT005 to F012A and B are isolated from the safety-related signals from PT002A and B to F012A and B.

Question 430.211

ABWR SSAR Figure 6.7-4 shows only one motor-operated isolation valve on each of the tie lines between each safety-related division and the common non-safety-related division of the high pressure nitrogen gas supply system (MO-F012A and B). The tie piping portion between the two isolation valves is presumably non-safety-related. Explain how essential nitrogen demand will be met during a situation when there is a pipe rupture is one safety-related division (initiating event), single active component failure in the other safety-related division (e. g., isolation valve on the applicable tie line is open) and a pipe break in the non-safety-related

portion of the tie lines (if there is such a portion). Alternately, provide two safety-related automatic isolation valves in series on each tie line. (9.3.1, 6.7)

Response 430.211

The ADS accumulators are sized to permit valve operation several times before new nitrogen must be added. There are check valves at the nitrogen inlet of each ADS accumulator and check valves F008A and B to prevent loss of nitrogen from the ADS accumulators. If the postulated sequence of events were to occur, PT002A and B would alarm and the position of valves F012 A and B would be indicated. The operator would be able to manually close the open valve, either F012A or B. This would restore nitrogen to four ADS accumulators if such resupply were to become necessary. The ADS function requires three of eight valves to operate which would be available at all times.

Question 430.212

Provide an FMEA for the Nitrogen Gas Supply System. (9.3.1, 6.7)

Response 430.212

As discussed in Section 15B.1 and in response to Question 430.194, FMEAs are provided for two ABWR systems and one major component which present a significant change from past BWR designs. Specifically, FMEAs are included in Appendix 15B for:

(1) Control rod drive system (with emphasis on the fine motion control rod drive),

(2) Essential multiplexing system, and

(3) Reactor internal pump.

Regulatory Guide 1.70 requires FMEAs to be performed on selected subsystems of Chapters 6, 7 and 9. However, GE considers that the plant nuclear safety operational analysis (NSOA) of Appendix 15A and the probabilistic evaluations of Appendix 19D adequately address single failures for those systems and components which are similar to past BWR designs. Since the designs of the ABWR HPIN system is similar to past designs, GE believes that it is unnecessary to perform a FMEA on the HPIN system.

Question 430.213

Include the nitrogen gas supply system in the ABWR System classification summary Table 3.2-1. (9.3.1, 6.7)

Response 430.213

The nitrogen gas supply systems are listed in Table 3.2-1 as follows:

Table 3.2-1 item no. P9—High Pressure Nitrogen System

Table 3.2-1 item no. T5—Atmospheric Control System.

Question 430.214

Contrary to what has been stated in ABWR SSAR Subsection 6.7.1, there is only one non-safety-related continuous nitrogen supply portion common to the two essential supply divisions (See Figure 6.7-1). Correct Subsection 6.7.1 as appropriate and discuss the effect of loss of nitrogen supply via the non-safety-related portion to all the equipment and components identified in SSAR Section 6.7.1 (e. g., Pneumatically operated valves and instruments inside the primary containment vessel) during normal operation. Clarify whether the pneumatic accumulator which provides the backup operating gas for the main steam isolation valve (See SSAR Subsection 5.4.5.2) is safety-grade for each valve. If not, justify the design. (9.3.1, 6.7)

Response 430.214

Subsection 6.7.1 has been revised to state that there is only one non-safety-related continuous nitrogen supply portion common to the two essential supply divisions.

Loss of nitrogen supply via the non-safety-related portion of the system during normal operation would have the following effects:

(1) The MSIV's would close leading to a scram,

(2) The ADS and relief function accumulators would be operable for valve operation for several times before nitrogen resupply would be needed,

(3) Testing valves in the HPCF and RHR systems would not be available, and

(4) Several sampling valves would not be available.

Loss of nitrogen supply would not adversely affect plant safety.

The pneumatic accumulator and its inlet check valve for each main steam isolation valve are safety grade.

Question 430.215

Provide enlarged and legible piping and instrumentation diagram for instrument air and service air systems (SSAR Figures 9.3-6 and 9.3-7), which clearly indicate all the components served, safety and non-safety-related portions, and isolation provisions between the safety and non-safety-related portions; a table showing instrument air consumption during normal plant operation. Explain the statements in SSAR Subsections 9.3.6.1.1 and 9.3.7.1.1 which indicate that the containment penetrations (secondary containment penetrations) for the instrument air and service air systems are equipped with sufficient isolation valves to satisfy single failure criterion (the SSAR figures do not indicate this). Under the "Location" column for Item P.4 (Instrument/Service Air Systems), Sub-item 5 of ABWR SSAR Table 3.2-1 (Page 3.2-33), include turbine building, radwaste building and service building since some of the components of these systems are located in these buildings. Also identify the design feature of safety-related air-operated valves outside the containment to handle the loss of air supply by the non-safety-related instrument air system during plant operation. (9.3.1, 9.3.6, 9.3.7)

Response 430.215

The containment penetrations described in Subsections 9.3.6.1.1 and 9.3.7.1.1 for instrument air and service air systems, respectively, are primary containment penetrations (not secondary containment penetrations).

Though neither system is safety-related, primary containment penetrations are Seismic Category I design and are provided with redundant isolation valves.

There is no safety-related, air operated valve outside containment that is normally supplied with instrument air. The primary containment outboard isolation valve, F276 is motorized rather than air-operated.

Table 3.2-1 has been corrected per Amendment 12.

Enlarged and legible piping and instrument diagrams for the instrument air and service air systems was provided under separate cover.

Tabulation for instrument air consumption during operation is provided in new Table 9.3-4.

Question 430.216

Discuss the specific features provided (e.g. pre and after filters associated with compressors, particle size, dryer) for ensuring that air or nitrogen supplied by each of the applicable systems to components important to safety (e.g., MSIV's; SRV's; scram valves which are located outside the containment) meet the quality requirements (clean, dry and oil free) of ANSI MC 11.1-1976 standards. In this context, the staff finds GE's justification for limiting particle size to 5 microns in the air stream at the instrument (the particle size is mentioned only for the instrument air system) instead of 3 microns as required by the above standards unsatisfactory (see Generic Letter 88-14 "Instrument Air Supply System Affected Safety-Related Equipment"). Note that the staff will accept higher than 3 microns only if the larger size is supported by supplier's data for all the safety-related equipment or components that are supplied compressed air or nitrogen for their operation and there is assurance that the larger size will not cause any equipment or component degradation with aging. Also, discuss how all the above systems meet the guidelines of Regulatory Guide 1.68.3, "Preoperational testing of Instrument and Control Air Systems. "Include the atmospheric control system since it supplies nitrogen for safety-related components via the non-essential portion of the nitrogen gas supply system during normal power operation. Include the service air system since it supplies air to safety-related components inside containment during refueling. Identify applicable interface requirements for all the nitrogen or air supply systems with regard to fluid quality and preoperational testing requirements. (6.2.5, 6.7, 9.3.1)

Response 430.216

Instrument air system includes two identical oil-less parallel compressing trains (each consisting of an air suction filter, a compressor unit, after cooler, and moisture separator); a common receiver tank; and two parallel drying trains (each consisting of a prefilter, a dryer unit,

and an after filter). Instrument air is distributed to pneumatic equipment after drying and filtration to no more than 5 micrometers. Service air system undergo similar filtration and drying processes but has a less restrictive air quality. Service air which serves as a backup to instrument air, connects upstream of the instrument air's drying trains and undergo another drying and filtration processes to meet instrument air requirements before distribution. The 5 micrometer particle size has not been a problem in operating plants and is considered acceptable.

Atmospheric control system provides nitrogen to all pneumatic equipment inside the primary containment during normal operation. Nitrogen is maintained dry, oil-free and filtered before distribution to pneumatic equipment.

All the four compressed gas systems undergo preoperational testing in conformance with Regulatory Guide 1.68.3. Safety actuation of all air-operated valves will be verified in the safe direction on loss of power and pneumatic medium. All the necessary testing required by Reg. Guide 1.68.3 will be met.

Question 430.217

Provide description and figures showing how the four compressed gas systems (atmospheric control, nitrogen gas supply, instrument air, and service air systems) are interconnected. Include isolation capabilities, if applicable, between the essential divisions of nitrogen gas supply system, and instrument air and service air systems.

Response 430.217

Atmospheric control system normally supplies nitrogen to HPIN and instrument air systems for all pneumatically operated equipment inside the primary containment. The HPIN divisional safety grade nitrogen supply from nitrogen gas bottles is normally isolated from the HPIN non-safety grade nitrogen supply by isolation valves P54-F003A & B. When the pressure in the HPIN non-safety grade nitrogen supply drops to a low set point, bottled nitrogen supply valves P54-F003A & B will open and valves P54-F012A & B will close to establish a pressure boundary between HPIN's safety grade and non-safety grade nitrogen supplies.

HPIN System interfaces with instrument air system through valve P52-F270. During refueling outage or maintenance when the primary containment has been de-inerted, instrument air system provides air to pneumatically operated equipment inside the containment by manual closure of valve P52-F270 and manual opening of instrument air supply valve P52-F257. During normal plant operation when atmospheric control system fails to deliver the required nitrogen supply to the HPIN system, instrument air could be used as a short term backup to prevent plant shutdown (MSIV's losing N_2 pressure will isolate and cause a scram). The amount of instrument air that would be added to the primary containment is not considered sufficient to de-inert the containment.

Instrument air also provides air to pneumatically operated equipment outside the primary containment. In the event that instrument air system pressure drops, service air can serve as a backup. The operator may manually open the service air supply valve.

See compressed gas systems interconnection schematic (Figure 20.3.15-1).

Question 430.218

Clarify whether the instrument air system supplies backup air to the nitrogen consumers located inside the primary containment during normal plant operation when the nitrogen gas supply pressure drops below the specified setpoint. If so, justify supply of backup air instead of backup nitrogen inside the containment during normal operation when containment has to be maintained inert. (9.3.1, 9.3.6)

Response 430.218

During normal operation with an inerted primary containment, the instrument air system can serve as a backup to the HPIN System if nitrogen supply pressure drops below the specified setpoint and efforts to restore that pressure have failed. This condition should occur infrequently. The instrument air system is used as backup to the HPIN System because it is available and any small leakages into primary containment would only slowly affect the inerted condition. Repair of the AC nitrogen supply system would proceed during this period. Providing a backup nitrogen system is not considered cost effective because it would rarely be used and relying upon the instrument air system as the backup is satisfactory. However, during a refueling outage when primary the containment has been de-inerted, the instrument air system is used as a backup to HPIN to operate pneumatically operated equipment inside the containment. Note that when containment is de-inerted, all nitrogen supply is blocked off.

Question 430.219

Clarify whether both air compressors of the service air system operate simultaneously whenever the demand for service air exceeds 50 percent of the peak air consumption. (9.3.1, 9.3.7)

Response 430.219

Service air system has two air compressors, each sized to handle 50 percent of the peak demand. One unit is normally running to supply normal service air requirements. If air supply demand exceeds the capacity of one compressor unit (50 percent of peak demand), the other unit will automatically start to meet 100% peak demand requirements.

Question 430.220

Compressed air or nitrogen supply systems designed to supply fluid to equipment or components located inside the containment for their operation at no more than design basis accident peak containment pressure will not be able to perform their intended function at higher containment pressures which may result under degraded core conditions. This, in turn, may compromise the operation of the subject components. Address the above concern as it relates to the design of compressed air and nitrogen gas systems. (6.7, 9.3.1)

Response 430.220
Operability of safety-related pneumatically operated equipment inside the containment at containment pressures higher than the design basis is discussed in Subsection 19E.2.1.2.2.2 paragraph 2(b).

Question 430.221
Provide system P&ID for radioactive drain transfer system, which clearly show the safety-related portions of the system and the primary containment isolation valves. Provide a description of the loop seal design for the secondary containment penetrations for the system which includes (but is not limited to) survivability under various modes of reactor conditions (e.g. transients, accidents) and safety classification (seismic category and Quality group). Also, provide design and expected flow capacities and sump capacities. (9.3.3, 9.3.8)

Response 430.221
The system P&ID showing the sumps with their sumps, piping, instruments and controls are included in Section 11.2. The design of the remainder of the system, the equipment and floor drain collection piping, is the responsibility of the applicant referencing the ABWR design. The interface requirements are provided in new Subsection 9.3.12.1. Subsection 9.3.8.2 has been modified accordingly.

Design and expected flow capacities are as follows:

	Capacity
Sump Tanks (16 tanks)	4 m^3 per tank
Drywell Sumps (2 sumps)	2.5 m^3 per sump
Sump Pumps (2 per sump)	10 m^3 per hour (drain transfer rate)

Question 430.222
Provide information regarding the effects of blockage in any portion of the drain system, including potential overflow paths. (9.3.3, 9.3.8)

Response 430.222
The radioactive drain transfer system boundary starts at the sumps and the lines which discharge to the sump. Should blockage occur (from unspecified condition) in the drain piping to the sump, then overflow will be to the floor drains (high conductivity waste). It is particularly unlikely that blockage would occur for closed drains to the sump. Complete blockage of the floor drains is also unlikely and is prevented by attention to good housekeeping practices.

Blockage of sump pump piping is minimized by covering the sumps to prevent entry of large debris and by taking suction sufficiently above the bottom of the sump to prevent aspiration of

objects which could block the lines. Blockage, if it occurred, would probably be in the suction piping or at the discharge check valve. The consequences of flooding compartments containing safety-related equipment because sump piping blockage are bounded by existing flood protection performance analyses.

Sump piping blockage can be detected by a sustained high-high water level alarm in the presence of a run pump signal from the sump pumps.

Question 430.223

Are the level switches for "each" sump of the radioactive drain transfer system (e.g. ECCS pump rooms, fuel handling area, steam tunnel) redundant and safety related. Do the level switches annunciate an alarm and provide level indication in the control room in case of rising water level? If they are not designed as stated above, justify the design. Also, include the sump level switches in ABWR SSAR Table 3.2-1 under "Radioactive Drain Transfer System". Further, identify which flow transmitters located in the secondary containment under "Leak Detection and Isolation System" in SSAR Table 3.2-1 are non-safety-related. (9.3.3, 9.3.8)

Response 430.223

Each sump has three level switches. One monitors the sump pit water level for leak detection and alarm in the main control room (except drywell sumps where water level is recorded in the main control room). The second level switch starts and stops the first pump on high an low water level respectively. The third level switch is fir starting and stopping the second pump when water level is at high-high and low-low. High-high and low-low water level conditions are also annunciated in the main control room. Sump pumps do not perform a safety-related function and are not required to function during accident condition. The sumps level switches are non-safety-related since they only provide pump controls and control room alarm annunciation.

There is one non-essential LDS flow transmitter that monitors the condensate flow from the drywell air cooler common header to the HCW drain sump in the drywell. This bucket type transmitter is located inside the drywell. (Item E3 of Table 3.2-1 has been updated.

Question 430.224

ABWR SSAR Subsection 9.3.8.2.1 indicates that the capacity of the nonsafety-related radioactive drain transfer system, in conjunction with the placement of safety-related equipment on raised pads or grating, precludes the adverse consequences of flooding on safety-related equipment and components. However, SSAR Subsection 3.4.1.1.2 states that the ABWR design does not take any credit for operation of the drain sumps to provide flood protection. Resolve the above inconsistency, realizing that the drain transfer system has to be safety-related is its operation is to be credited for flood protection of safety-related equipment and components. (9.3.3, 9.3.8)

Response 430.224
Radioactive drain transfer system, in conjunction with placement of safety-related equipment on elevated pads or grating is not given credit to provide flood protection. The system however, is capable of handling less severe internal flooding (within the sump pumps capacity). Severe internal flooding scenario is discussed in Subsection 3.4.1.1.2.

Question 430.225
Identify the system design features and their safety classification (i.e. seismic category, quality group) provided to prevent backflooding of safety-related equipment rooms (e.g. ECCS equipment rooms). (9.3.3, 9.3.8)

Response 430.225
Check valves are provided in the sump pump discharge lines to prevent flow reversal and backflooding. Piping is seismically analyzed to remain intact following a seismic event. Safety-related equipment is housed in watertight compartments to preclude flooding propagation. Flood protection features are discussed in Subsection 3.4.1.

Question 430.226
Provide an interface requirement for the drainage systems for non-radioactive liquid waste prohibiting any conditions to the radioactive drain transfer system. (9.3.3, 9.3.8)

Response 430.226
All non-radioactive liquid drains shall be routed, collected and processed separately from the radioactive liquid drains. No interconnections with radioactive liquid waste transfer and processing streams shall be permitted except at the discharge header after the treatment process. Prior to discharge to the environs, the processed non-radioactive drains shall be monitored for radioactivity.

Question 430.227
Regarding TMI Action Item III.D.1.1 (NUREG-0737) concerning the integrity of systems outside containment likely to contain radioactive material for pressurized water reactors and boiling water reactors, provide information on the following items: (1A.2.34)

Question 430.227a
Clarify whether the systems that require periodic leak testing listed in ABWR SSAR Subsection 1A.2.34 include systems unique to the ABWR design. Include such systems if they are not currently included in Subsection 1A.2.34. Also, include containment and reactor coolant sampling systems to the above list.

Response 430.227a
There are no closed systems that could contain highly radioactive fluids in an emergency that are unique to the ABWR design.

In addition to the post accident sampling system, the fuel pool cooling and cleanup system has been added to the list of systems requiring periodic leak testing.

Question 430.227b

Since ABWR SSAR Section 5.2.5 discusses leak detection methods outside primary containment which include secondary containment, turbine building and steam tunnel, rewrite Subsection 1A.2.34 to include all the areas mentioned above (current write-up refers to secondary containment only).

Response 430.227b

Response to this question is provided in revised Subsection 1.A.34.

Question 430.227c

SSAR Subsection 1A.2.34 states that all lines which pass outside the secondary containment contain leakage control systems or loop seals and that these systems are discussed in SSAR Section 6.5.3. However, these systems, particularly, the loop seal systems for the secondary containment penetrations, are not discussed in the SSAR Section 6.5.3. Discuss the above systems.

Response 430.227c

The references to “leakage control systems” should have been “leakage detection systems”. This has been corrected as indicated in Subsection 1A.2.34. The reference to loop seals for the secondary containment penetrations should be Subsection 6.2.3 rather than 6.5.3. This has also been corrected as indicated in Subsection 1.A.2.34.

Question 430.227d

SSAR Subsection 1A.2.34 indicates that under certain circumstances an affected line associated with a system may not be isolated from the secondary containment as part of corrective action. Explain under what circumstances this will be the case.

Response 430.227d

Response to this question is provided in revised Subsection 1A.2.34.

Question 430.227e

Explain what the words “augmented Class D systems” mean in relation to the purchase of pressure boundary components of radioactive waste systems (See ABWR SSAR Subsection 1A.2.34) to assure their capability to provide integrity.

Response 430.227e

Design basis (7) under Subsection 6.2.3.1 states “Liquid leakage from the secondary containment to the clean zone or to the environment is controlled by means of water loop seals, automatic shutoff valves in series, or piping upgrade to safety class.” A piping upgrade to safety class augments a Class D system to a Class C or higher safety level thus assuring a higher capability to provide integrity.

Question 430.228
Criteria for the design basis for protection from external flooding should conform to Regulatory Guide 1.102, "Flood Protection for Nuclear Power Plants" as well as Regulatory Guide 1.59, "Design Basis Floods for Nuclear Power Plants". Modify the statement in ABWR SSAR Section 3.4 to include the commitment to meet this Regulatory Guide. (3.4)

Response 430.228
Response to this question is provided in revised Subsection 3.4.

Question 430.229
Flood protection analysis is provided for the reactor building and control building only. The ABWR SSAR scope includes structures, systems and components important to safety in this area. However, portions of other structures, within the scope of the plant-specific applicant may house systems and components important to safety (for example, the pumps associated with the ultimate heat sink). The SSAR therefore needs to specify as interface criteria flood protection design criteria for these systems, structures and components similar to those identified for internal and external flooding for the systems, components and structures within the ABWR SSAR scope. (3.4.1)

Response 430.229
Response to this question is provided in revised Subsections 3.4.1 and 3.4.1.1.

Question 430.230
ABWR SSAR Subsection 3.4.1.1.1 references Figure 1.2-2 (which presumably includes a reference to Figure 1.2-2a). This section should also reference Figures 1.2-4 through 1.2-7 which provide a more complete view of safety-related components located below the design flood level. Additionally, these figures should be modified to show the location of all watertight doors used to provide compartment separation and the location of raised sills for which credit is taken. (3.4.1)

Response 430.230
Response to this question is provided in revised Subsection 3.4.1.1.1.

Question 430.231
Section 3.4.1.1.2 references flooding from a feedwater line break in the steam tunnel, with data for the evaluation provided in Chapter 15.1. However, the evaluation is not provided in ABWR SSAR Section 3.4.1. Provide the flood analysis for this high energy line break. (3.4.1)

Response 430.231
Response to this question is provided in revised Subsection 3.4.1.1.2.

Question 430.232
Your response to Question Nos. 430.73 and 430.85 (submittal dated February 28, 1990) states that the worst possible flood (circulating water system failure) that can affect the turbine

building would result in a flood level slightly higher than grade and that all plant safety-related facilities are protected against site surface water intrusion (external flooding). Explain how all structures, systems and components (SSC) important to safety are protected against site surface water intrusion resulting from the above flood level. Also, considering access openings and penetrations below design flood level between the reactor building and turbine building (See ABWR SSAR Table 3.4-2), explain how the SSC important to safety located in the reactor building are protected from flooding inside the turbine building. (3.4.1)

Response 430.232

All plant structures are weather proofed against external flooding up to 8 cm (3 inches) above plant ground grade. Also, the surface areas around the site structure are sloped in such a matter to permit water to drain away from the site buildings. All the penetrations through the site buildings use seals and leaktight connections for protection against external flooding. The access to the control building, turbine building, and reactor building is controlled via enclosed passage ways or water-tight tunnels from the service building. Any water intrusion from flooding in the turbine building will be via the service building to other structures that house safety-related systems and components. However, water intrusion from external sources is prevented by the use of closed doors and water tight structures in these buildings. Any water intrusion into the service building will flow into the floor drains to the HCW sump that is located in the bottom floor of the service building.

Subsection 3.4.1.1.1 has been revised to specify that plant structures that house safety related systems and components will be externally waterproofed up to 8 cm (3 inches) above the plant ground grade elevation level.

Question 430.233

Discuss how SSC important to safety are protected against flooding that may result from failure of non-safety-related plant equipment and components located outdoors (e.g., condensate storage tank). (3.4.1)

Response 430.233

Refer to the response provided to Question 430.232 concerning flooding from the turbine building. The protection measures discussed in the response to Question 430.232 also guard against flooding from outdoor equipment and storage tanks. Flooding from the outdoor equipment is not expected to penetrate the plant structures and affect the integrity of the plant safety related equipment. It will spread over the site area and dissipate into the ground.

Question 430.234

Identify the safety classification (seismic category, quality group) for all instrumentation used to alert the operator on flood situation for performing timely corrective actions. (3.4.1)

Response 430.234

The sumps instrumentations as well as flood level monitoring are used to alert the operator on flood conditions to perform timely corrective actions. At least two or more fully instrumented

sumps (LCW, HCW, SD, HSD... etc.) are provided in each building including the drywell and the control building. Each building has floor drains that connect to its HCW sump for transfer of the accumulated liquid. Each drain sump is fully instrumented as follows:

(1) Level switches are used for automatic control of the sump pumps.

(2) Level switches are used for annunciation of sump levels (HH and LL).

(3) Level switches are used in sump pits except in the drywell sumps for detection of leakage from sump tanks.

(4) Flow indicators are provided in the drywell LCW and HCW sumps drain lines to monitor leakage in the drywell.

(5) Each sump has two pumps, one is used for backup and for added capacity if needed.

The LCW and HCW sumps and associated control and instrumentation are classified Seismic Category I while the HSD and SD sumps are classified Non-Seismic Category I. The instrumentation used to control and monitor the operation of the drain sumps are classified non-essential.

The instrumentation that monitors flood levels in compartments are normally classified non-essential.

Question 430.235

Provide flooding analyses for applicable plant areas to demonstrate that safety-related equipment and components of the fuel pool cooling and cleanup system and safety-related SSC in the fuel handling area will not be adversely affected by any postulated flooding; include flooding analysis for the radwaste and service buildings in so far as they relate to other structures which house SSC important to safety. Also, provide details to demonstrate that there is no uncontrolled leak path of radioactive liquid from the radwaste building under conditions of the worst-case internal flood. (3.4.1)

Response 430.235

Response to this question is provided in revised Subsection 3.4.1.1.2.5 and new Subsections 3.4.1.1.2.3 and 3.4.1.1.3.4.

Question 430.236

Since the service building is a nonsafety-related structure, justify its inclusion in the list of locations of some electrical modules and cables performing a safety-related function and some safety-related valves and dampers of the HVAC systems. Also, justify nonsafety quality group classification for “other safety-related valves and dampers” for HVAC systems (see ABWR SSAR Table 3.2-1, Page 3.2-29). (9.4)

Response 430.236
These systems are for the technical support center. The technical support center requires equipment similar to safety-related equipment but are not classified as safety related components. Table 3.2-1 has been changed as indicated.

Per Reg Guide 1.26, systems such as HVAC are not covered by Quality Group designation.

Question 430.237
Explain the words “high efficient section” occurring in SSAR Subsection 9.4.1.1.3, second paragraph. If the above words mean HEPA filter, include it in SSAR Figure 9.4-1, and provide a table listing compliance status including justification for non-compliance with each of the applicable guidelines identified in Positions C.1 and C.2 of Regulatory Guide 1.140 for control building normal ventilation exhausts. (9.4)

Response 430.237
This filter is a medium grade bag type filter designed to remove dust and particulate matter. Subsection 9.4.1.1.3 has been changed as indicated. The component description table to be provided in a future amendment will reflect this change.

Question 430.238
Clarify whether (1) the two redundant safety-related trains of the control room equipment HVAC system are totally independent and whether each has 100 percent capacity and (2) the three subsystems of the essential electrical HVAC system (SSAR Subsection 9.4.1.2.3) are totally independent so that failure of any one subsystem will not compromise the availability of the remaining two subsystems. Also, explain what Essential Chiller Room C (SSAR Subsection 9.4.1.2.3) means since the HECW system presumably has only two safety-related chiller trains. (9.4.1)

Response 430.238
(1) The two, 100 percent, trains of HVAC equipment for the control room are totally independent. The (Figure 9.4-1) has been revised. (2) The three trains of HVAC equipment for the essential electric equipment rooms are totally independent. The P&ID (Figure 9.4-4) has been revised.

See revised Subsection 9.2.13 regarding the number of safety-related chiller trains (Amendment 14).

Question 430.239
Provide complete system P&IDs including safety classification changes (i.e., seismic category and quality group) for the control building HVAC system (i.e., SSAR Sections 9.4.1.1 and 9.4.1.2). The P&IDs should show among other things (1) monitors located in the system intakes that are cable of detecting radiation and smoke, (2) capability for isolation of nonessential portions by two automatically actuated dampers in series and (3) provisions for isolation of the control room upon smoke detection at the air intakes. Also, provide complete flow diagrams for

all modes of control building HVAC system operation (i.e., normal, accident, smoke/toxic gas removal) showing among other things flow rates and component description tables for the building HVAC system (SSAR Figure 9.4-1 is illegible in parts and is also incomplete). (9.4.1)

Response 430.239

The Control Building HVAC P&ID (Figure 9.4-1) has been revised and updated flow information is included in revised Table 9.4-3.

Question 430.240

SSAR Subsection 9.4.1.1.3 states that the emergency recirculation system includes an electric heating coil whereas SSAR Figure 9.4-1 shows only a hot water system connection to a heating coil. The above figure additionally shows three HECW divisions whereas SSAR Subsection 9.2.13 mentions only two HECW divisions. Resolve the above inconsistencies. Also, clarify whether the normal recirculation unit and the hot water system are safety-related, since their availability during the emergency mode of operation is vital to maintaining proper environmental conditions in the control room and at the safety-grade filter train (Note that there is no description of the hot water system in the SSAR. This should be provided). (9.4.1)

Response 430.240

The entire control room HVAC system is safety-related except for the hot water heating (HWH) system. The HWH system is not necessary in an emergency. (Note, the HWH system description will be included in a future amendment). HECW system consists of redundant subsystems in three divisions. (See revised Subsection 9.2.13).

Question 430.241

Clarify whether the system air intakes are provided with tornado missile barriers. (9.4.1)

Response 430.241

All safety-related air intakes are provided with tornado missile barriers. Item (6) has been added to Subsection 9.4.1.1.1 and item (4) to Subsection 9.4.1.2.1 has been added. (9.4.4)

Question 430.242

For the turbine building ventilation system, provide (1) complete system P&ID including safety classification changes and isolation and monitoring devices, (2) complete system flow diagrams showing description tables. Also, identify the corrective operator action following annunciation of alarms upon detection of high radiation in the building ventilation exhaust. (9.4.4)

Response 430.242

A complete turbine building HVAC system flow diagram update and the identification of the corrective operator action following high radiation alarms will be provided in a future amendment. The Turbine Building HVAC P&ID (Figure 9.4-2) has been revised.

Only the reactor building portion of reactor/turbine building ventilation system is monitored for radiation. There is an isolation signal for the contaminated portions.

Question 430.243
For the reactor building ventilation system, provide the following:

Question 430.243a
Complete system P&IDs including safety classification changes, isolation and monitoring devices for secondary containment (e.g., radiation monitors in the secondary containment ventilation exhaust, spent fuel pool and essential equipment room area exhausts), essential electrical equipment, essential diesel generator, drywell purge and reactor internal pump control panel room HVAC subsystems.

Response 430.243a
The reactor building HVAC system P&ID (Figure 9.4-3) has been revised.

Question 430.243b
Some of the SSAR figures (e.g., Figures 9.4-3, 9.4-4) have illegible portions; there is no figure in the SSAR for the mainsteam/feedwater tunnel HVAC subsystem; SSAR Figure 9.4-3 for secondary containment HVAC subsystem does not show servicing of rooms housing redundant equipment for some essential systems; and the figures do not specify flow rates. Provide enlarged and legible size complete flow diagrams showing flow rates among other things for each subsystem (for guidance in contents for requested response, see GESSAR-II HVAC system flow diagrams provided in the GESSAR-II SAR).

Response 430.243b
Enlarged and legible size complete flow diagrams for each subsystem will be provided in a future amendment.

Question 430.243c
Component description tables for each subsystem.

Response 430.243c
Component description tables for each subsystem is provided in Table 9.4-4.

Question 430.243d
FMEA for each subsystem.

Response 430.243d
As discussed in Section 15B.1, FMEAs are provided for two ABWR systems and one major component which present a significant change from past BWR designs. Specifically, FMEAs are included in Appendix 15B for:

(1) Control rod drive system (with emphasis on the fine motion control rod drive),

(2) Essential multiplexing system, and

(3) Reactor internal pump.

Regulatory Guide 1.70 requires FMEAs to be performed on selected subsystems of Chapters 6, 7 and 9. However, GE considers that the plant nuclear safety operational analysis (NSOA) of Appendix 15A and the probabilistic evaluations of Appendix 19D adequately address single failures for those systems and components which are similar to past BWR designs. Since the designs of the ABWR HVAC systems are similar to past designs, GE believes that it is unnecessary to perform FMEAs on the HVAC systems.

Question 430.243e

Description of isolation devices including safety classification, redundancy and source of power to the devices for all nonsafety-related HVAC subsystems that interface with safety-related structures, systems and components (SSC) (e.g., secondary containment HVAC subsystem, drywell purge supply/exhaust subsystem).

Response 430.243e

The secondary containment HVAC P&ID (Figure 9.4-3) has been revised to show system classifications and interfacing systems information.

Question 430.243f

Specific design characteristics for meeting GDC 4 requirements for safety-related HVAC subsystems.

Response 430.243f

The specific design characteristics for meeting GDC 4 requirements for safety-related HVAC systems will be provided in a future amendment.

Question 430.243g

Table listing compliance status with each of the applicable guidelines of Regulatory Guide 1.140, Positions C.1 and C.2 including justification for non-compliance for the normal ventilation exhausts from the secondary containment and drywell purge subsystems (SSAR Subsection 9.4.5.1.2 refers to filters in the secondary containment normal exhaust system, but does not discuss what kind these are).

Response 430.243g

Currently non-safety HEPA or charcoal filters that exist on any HVAC system are being reviewed for possible removal. A statement concerning Regulatory Guide 1.140 compliance will be included for all non-safety HEPA and charcoal filters that remain in the ABWR HVAC system.

Question 430.243h

Discussion of smoke removal operation for applicable HVAC subsystems including how the affected area will be isolated from other unaffected plant areas. Also, include the impact of

applicable HVAC subsystems in safe or alternate shutdown capability for a fire event in a plant area serviced by one of the applicable subsystems.

Response 430.243h

Discussion of smoke removal operation for applicable HVAC subsystems is provided in Subsection 9.5.1.

Question 430.244

ABWR Subsection 9.4.5.4.2 states that each divisional HVAC system consists of two power supply fans, two exhaust fans, and two recirculation units. However, SSAR Figure 9.4-4 shows only one recirculation unit per division. Also, the figure shows three HECW divisions supplying chilled water to the respective division room coolers; but SSAR Section 9.2.13 describes only two divisions for the HECW system. Resolve the above discrepancies realizing that the safety-related support systems for three diesel generators have to be completely independent of each other. (9.4.5)

Response 430.244

This should read two supply fans, two exhaust fans, and one recirculation unit. Subsection 9.4.5.4.2 has been updated as indicated. See revised Subsection 9.3.13 regarding the number of safety-related chiller trains (Amendment 14).

Question 430.245

Confirm that each supply and exhaust fan (of the essential electric equipment room HVAC System) mentioned above is a 100% capacity fan. (9.4.5)

Response 430.245

All fans of the essential electric equipment room HVAC System are 100% capacity fans. Subsection 9.4.5.4.2 has been updated as indicated.

Question 430.246

Discuss how the essential electric equipment HVAC subsystems meets GDC 17 “Electric Power Systems” as it relates to the protection of essential electrical components of the subsystem from failure due to the accumulation of dust and particulate materials (see SRP Section 9.4.5, Acceptance Criterion II.4 for required contents of response to this item). (9.4.5)

Response 430.246

All three divisions are supplied with a medium grade bag type filter to remove dust and particulate matter from incoming airstream. Intake structures are placed more than 9m (30 ft) above grade. See reactor building general arrangement drawings (Figures 1.2-11 and 1.2-12). Subsection 9.4.5.5.3 has been updated as indicated.

Question 430.247

Subsection 9.4.5.4.5 does not discuss temperature control. Provide a discussion of the method and instrumentation provisions for temperature control. (9.4.5)

Response 430.247
The method and instrumentation provisions for temperature control has been added to Subsection 9.4.5.4.5 as indicated.

Question 430.248
Provide a discussion of the means used for maintaining the rooms cooled by the essential electrical equipment HVAC system at positive pressure. (9.4.5)

Response 430.248
Positive pressure is maintained by pushing more air into the room than is pulled out by the exhaust fans. This is achieved by sizing the inlet fans to be larger than the exhaust fans. This has been added to Subsection 9.4.5.4.1.1 as indicated.

Question 430.249
Provide assurance that the air intake elevation for the essential diesel generator HVAC system is greater than 20 feet above grade or discuss the methods for protecting electrical panels from dust and particulate materials. (9.4.5)

Response 430.249
The diesel generator HVAC intake openings are located at elevation 18.5m. The diesel generator HVAC exhaust openings are located at elevation 13.1m.

Question 430.250
ABWR SSAR Subsection 9.4.5.5.2 states that the two supply fans for each of the three diesel generators take air from the outside and distribute it to the diesel generators. Clarify whether there is a common header for all the diesel generators for intake air. If there is, justify such a design. (9.4.5)

Response 430.250
Each diesel generator HVAC subsystem has its own fans, intake ports and exhaust ports. These are shown on the reactor building general arrangement drawings Figures 1.2-9 and 1.2-10.

Question 430.251
Provide drawings for the drywell purge supply/exhaust system and a discussion of the interfaces to the secondary containment HVAC system and to the standby gas treatment system. (9.4.5)

Response 430.251
This subsystem is included in the reactor building HVAC P&ID. This P&ID (Figure 9.4-3) shows all interfaces. The standby gas treatment system (SGTS) does not interface directly with any HVAC system. The SGTS system draws directly from within the secondary containment.

Question 430.252
Discuss the sensor location and actuation setpoint for the exhaust radiation monitor for the drywell supply/exhaust system as they relate to preventing unanticipated radioactive releases. (9.4.5)

Response 430.252
Sensor location is shown on the P&ID (Figure 9.4-3). The actuation setpoint for the radiation monitor will be shown in Table 11.5-1 in a future amendment.

Question 430.253
Since there are separate wetwell purge supply/exhaust system for the ABWR, include a description of that system in the SSAR. Note that all the information requested above for the drywell purge system should be included in the description of the wetwell purge system. (9.4.5)

Response 430.253
There is only one containment supply/exhaust system. Its job is to supply or exhaust air it receives from the atmospheric control system. The drywell purge/supply exhaust system will be renamed the containment purge supply/exhaust system. Subsection 9.4.5.6 has been updated as indicated.

Question 430.254
ABWR SSAR Subsection 9.4.5.6.1.2 states that the drywell purge system only operates during plant shutdown. Correct the above statement since it will operate also during inerting, deinerting or pressure control of the primary containment. Also, discuss how both the drywell and wetwell purge supply/exhaust subsystems together meet Branch Technical Position CSB 6-4 “Containment Purging During Normal Plant Operation.” (9.4.5)

Response 430.254
Subsection 9.4.5.6.1.2 has been updated as indicated for the containment purge supply/exhaust system.

Question 430.255
ABWR SSAR Subsection 9.4.5.1.2 states that two fan coil units provide cooling to the steam tunnel. Explain how the air is cooled. (9.4.5)

Response 430.255
The fan coil units consist of fans and a cooling coil supplied by the normal chilled water (HNCW) system. The fan coil units work in the same way as the emergency fan coil units except these are manually turned on from the control room. The secondary containment HVAC P&ID (Figure 9.4-3) has incorporated this arrangement.

Question 430.256
ABWR SSAR Subsection 9.4.5.8.2 states that each division of the reactor internal pump (RIP) control panel room HVAC subsystem contains two recirculation units. This does not agree with Figure 9.4-5. Resolve this discrepancy. (9.4.5)

Response 430.256
Subsection 9.4.5.8.2 has been updated as indicated.

Question 430.257
ABWR SSAR Subsection 9.4.5.8.3 addresses the nonessential equipment HVAC system instead of the RIP control panel HVAC system. Provide a safety analysis which addresses the proper system, including a discussion of the effects of loss of ventilation on the RIP control panel. (9.4.5)

Response 430.257
This safety analysis is for the RIP control panel room. Subsection 9.4.5.8.3 has been updated as indicated.

Question 430.258
For the radwaste control room and balance of the radwaste building HVAC systems, provide (1) complete P&IDs showing safety classification changes, isolation and monitoring devices, (2) complete flow diagrams showing among other things flow rates, and (3) component description tables. Also clarify whether any affected space is isolated by safety-related devices. (9.4.5)

Response 430.258
Complete P&IDs, flow diagrams, component description tables for the radwaste control room HVAC and balance of the radwaste building HVAC system text will be addressed in a future amendment. In addition, clarification will be provided as to whether any affected space is isolated by safety-related devices.

Question 430.259
ABWR SSAR Subsection 9.4.6.2.2 states that one radwaste building HVAC supply and exhaust fan are normally operating and the other of each type (i.e., for the radwaste control room and the balance of the radwaste building) is on standby. SSAR Subsection 9.4.6.3 mentions provisions for automatic start of the standby unit. However, SSAR Subsection 9.4.6.5.2 indicates that only an alarm is actuated by low flow in the exhaust fan discharge duct, and that ventilation must be restarted manually. Clarify whether the standby fan is started on failure of the operating fan. If not, provide justification. (9.4.6)

Response 430.259
Automatic startup of the backup fan is provided as indicated in revised Subsection 9.4.6.5.2.

Question 430.260
Provide a failure modes and effects analysis for the radwaste building HVAC system which shows that the normal direction of air flow from areas of low potential contamination to areas of higher contamination will not be reversed for the failure of any active component. (9.4.6)

Response 430.260
See response to Question 430.243d.

Question 430.261
For both of the radwaste building HVAC system zone exhausts, provide tables listing compliance status including justification for non-compliance with each of the applicable guidelines identified in Positions C.1 and C.2 of Regulatory Guide 1.140. (9.4.6)

Response 430.261
The radwaste building HVAC exhaust is routed through the main plant stack. No air-treatment will be performed by this exhaust system. Subsection 9.4.6.2.2 has been updated as indicated.

Question 430.262
For the service building ventilation system, provide complete system P&IDs including safety classification changes, isolation and monitoring devices, (2) component description tables, and (3) compliance with applicable guidelines of Regulatory Guide 1.140 for the system exhaust. Also, provide legible and enlarged portions of the SSAR Figure 9.4-7 which are currently illegible; include flow rates in the figure. (9.4.8)

Response 430.262
The service building HVAC system will be kept at the current flow diagram detail. All additional details are utility/site dependent and will be handled by the applicant referencing the ABWR design. Interface items will be placed in a new Subsection 9.4.10 (Interfaces) and Section 1.9 in a future amendment.

Question 430.263
Provide enlarged and legible versions of the drywell cooling system P&ID (SSAR Figure 9.4-8).

Response 430.263
An enlarged version of Figure 9.4-8 has been submitted.

Question 430.264
Identify the HVAC system that will service the remote shutdown panel area that will be used for providing alternate shutdown capability following certain fire events. (9.4)

Response 430.264
Division B of the control building essential electrical HVAC system will provide air cooling. Subsection 9.4.1.2.3.2 has been updated as indicated.

Question 430.265

Identify interface requirements as they relate to HVAC systems for plant areas which do not fall within the ABWR design scope but which may impact the SSC that are within the ABWR scope. Also, provide interface requirements for the technical support center (TSC) HVAC system. (9.4)

Response 430.265

There are no HVAC Systems for plant areas which do not fall within the ABWR design scope that impact the SSC that are within the ABWR scope; hence, there are no related "interface requirements". The interface requirements from the TSC are called out as COL action item in Subsection 9.4.10.

Question 910.17

Response 910.10 stated that in-plant security communications requirements of 10 CFR 73.55(f) are outside the scope of the ABWR Standard Design and would be the responsibility of the certification users. NRC Information Notice 83-83, "Use of Portable Radio Transmitters Inside Nuclear Power Plants," discussed concerns about the potential for radio frequency interference (RFI) from portable radio transmitters to cause reactor system malfunctions and spurious actuations. A capability for continuous communication between security personnel on patrol within vital areas of the plant and the security alarm stations is required by 73.55(f)(1). Common practice is to use hand held radios to meet this requirement. As noted in Information Notice 83-83, administrative prohibitions on the use of portable radios in certain areas of the plant may not adequately resolve the concern, particularly for new designs that make extensive use of solid state devices in instrumentation and control circuits. The ABWR Licensing Review Basis (August, 1987) stated that the ABWR SSAR will not provide details but will identify design requirements for 73.55(f). Please address design requirements to assure that means can be provided for continuous communication between security personnel stationed within, or on patrol within, vital areas of the plant and the security alarm stations, without interference with plant instrumentation and control.

Response 910.17

Safeguards Information not included in DCD (see SSAR Subsection 20.3.15, Amendment 33).

Question 910.18

Generic Letter 87-08 states that an uninterruptable power supply is preferred for alarm annunciator equipment and non-portable communications equipment. Industry standard ANSI/ANS-3.3-1988 states that intrusion detection aids (e.g., door alarms, fence alarms, and the alarm assessment [closed circuit television] system) should also be supplied with uninterruptable power. Regulatory Guide 5.65 notes that an uninterruptable power supply for electrical locking devices on vital area doors is an acceptable method for providing the prompt access to vital equipment required by 10 CFR 73.55(d)(7)(ii). Section 8.3 of the ABWR SSAR discusses onsite power systems, including non-class 1E vital AC power for important non-safety related loads, but makes no mention of security system power requirements. The draft EPRI-ALWR Requirements Document quoted in ABWR SSAR Appendix 19B says that the security power subsystem shall be a non-interruptible power source. Therefore, we again request you to discuss what provisions for these security systems have been provided in the standard design, and provide interface criteria that will allow the security requirements for these systems to be accomplished without adversely interfering with safety systems.

Response 910.18
Safeguards Information not included in DCD (see SSAR Subsection 20.3.15, Amendment 33).

Question 910.19
Explain why the environmental conditions parameters of ABWR SSAR Appendix 3I should not apply to the design and qualification of security access control systems. Consider desirability of operable card reader controlled door locks in the event of a pipe break, such as occurred at Surry (NRC Augmented Inspection Team Report 50-281/86-42).

Response 910.19
Safeguards Information not included in DCD (see SSAR Subsection 20.3.15, Amendment 33).

Question 910.20
The list of vital areas and vital equipment in Subsection 13.6.3.3 appears to include all of the reactor coolant pressure boundary, including appropriate motor control centers and power supplies; systems required for mitigation of transients; and support systems (e.g., cooling water, instrumentation, control power) necessary for these systems to operate; as well as other safety related systems. Are there any exceptions to this statement?

Response 910.20
Safeguards Information not included in DCD (see SSAR Subsection 20.3.15, Amendment 33).

Question 910.21
Subsection 13.6.3.4 still specifies door alarms only for doors at card reader locations. All doors and hatches connecting vital areas to non-vital areas should be alarmed (e.g., balanced magnetic switches with tamper-safe cabling), not just doors at card reader locations, with the alarm hardware being on the vital side of the door.

Response 910.21
Safeguards Information not included in DCD (see SSAR Subsection 20.3.15, Amendment 33).

Question 910.22
10 CFR 73.55(d)(7) also requires provisions to accommodate the potential need for rapid ingress or egress. Emergency exits should include provisions for exiting without use of keys or card readers. Please include appropriate language in Subsection 13.6.3.4.

Response 910.22
Safeguards Information not included in DCD (see SSAR Subsection 20.3.15, Amendment 33).

Question 910.23
Certain rooms are identified in Subsection 13.6.3.6, Bullet-Resisting Walls and Doors, Security Grills and Screens, as:

> "... a particularly high security zone. Specific precautionary measures have been incorporated into the building design to minimize forcible access to this area."

This seems to confuse two requirements of 10 CFR 73.55. Bullet-resisting barriers are required by 10 CFR 73.55(c)(6) for the control room. According to 10 CFR 73.55(c)(1), access to all the vital areas identified in Subsection 13.6.3.3 requires passage through two physical barriers of sufficient strength to meet the performance requirements of 10 CFR 73.55(a). As noted in

Regulatory Guide 5.65, a vital area barrier is to be constructed of materials that provide delay to forcible access from non-vital areas.

Response 910.23
Safeguards Information not included in DCD (see SSAR Subsection 20.3.15, Amendment 33).

Question 910.24
The change made to Subsection 13.6.3.6 for Response 910.13 is too vague. Will the design of air exhausts, HVAC gratings, and other man-sized (i.e., 96 square inches) openings, in all physical barriers that separate vital areas from non-vital areas, satisfy the criterion in NUREG-0908 and Regulatory Guide 5.65 that the integrity of a vital area barrier containing them not be decreased?

Response 910.24
Safeguards Information not included in DCD (see SSAR Subsection 20.3.15, Amendment 33).

Question 910.25
The meanings of some statements in Section 13.6.3 are unclear and may be unnecessary:

(1) Subsection 13.6.3.1, Introduction, includes “the capability for detection of inoperability of vital equipment” as a concern of the physical security design requirements. Is this what it was meant to say? This is not typically a physical security function. What portions of Chapter 7 discusses this?

(2) What is the intent of the last sentence of Subsection 13.6.3.3: “Hence, access control is considered separately.”?

(3) The interface requirements of Subsection 13.6.3.7, Compatibility with the Remainder of the Plant, would be covered in the site security plans required by 10 CFR 50.34(c) and (d). Section 13.6.2 already states that the security plans are out of the scope of the ABWR Standard Plant design certification which means they would be required to be provided by applicants referencing the certified design. Of the eleven items listed, only #3 appears to be a unique ABWR interface requirement.

If 13.6.3.7 is intended to clarify what additional security requirements those applicants would need to satisfy, the list is incomplete, as it omits lighting and other requirements.

Response 910.25
Safeguards Information not included in DCD (see SSAR Subsection 20.3.15, Amendment 33).

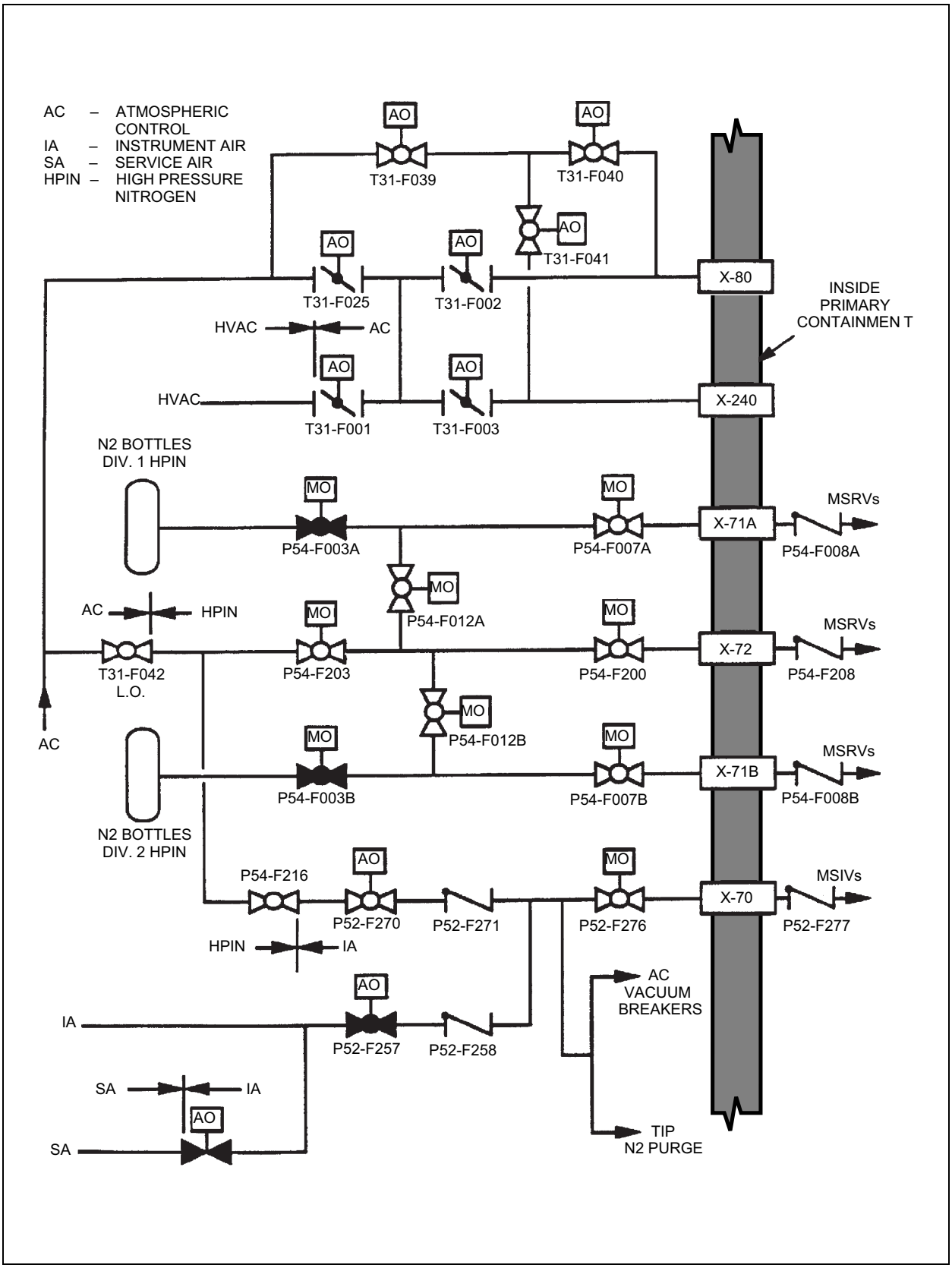

Figure 20.3.15-1 Compressed Gas Systems Interconnections (Response to Question 430.217)

20.3.16 Response to Sixteenth RAI — Reference 16

Question 430.266

Provide system layout diagrams for the diesel generator support systems. These diagrams should be of sufficient detail so that component location can be determined and the accessibility of equipment for test and maintenance can be evaluated. Physical separation between individual subsystems of each support system serving the three diesel generators should be explicitly stated in the respective SSAR sections.
(9.5.4 - 9.5.8)

Response 430.266

The component arrangement and equipment layout for the diesel generator support systems is shown in the piping and instrument diagrams (P&IDs) for each of the support systems. These P&IDs have been added as Figures 9.5-6 through 9.5-9.

The detail design of the diesel auxiliary systems is highly dependent on the specific diesel manufacturer selected. The figures depict typical diesel generator auxiliary support systems. The actual plant designs may differ. Such differences will be reviewed as an interface requirement after the selection of the diesel vendor is finalized and the specific diesel engine data is available. This requirement has been added to Subsection 9.5.13, “Interfaces”, as a new subsection 9.5.13.5.

The general arrangement of the major equipment is shown on the reactor building general arrangement drawings, Figures 9A.4-5 through 9A.4-8 (also, see Figures 1.2-9 through 1.2-13). All three diesel-generators have their own individual set of support systems. No one diesel-generator shares its support systems with any other diesel-generator. They are physically separate and located in different areas of the reactor building, separated by reinforced concrete walls. The independence of the support systems is described in Subsection 9.5.4 for fuel oil system, 9.5.5 for cooling water system, 9.5.6 for starting air system, 9.5.7 for lubrication system, and 9.5.8 for combustion air intake and exhaust system. Subsections 9.5.5.2 and 9.5.8.2 have been slightly modified, to be consistent with the new figures (9.5-6 through 9.5-9).

Question 430.267

For each diesel generator support system, provide sufficient information on how each system is protected against the effects of failure of any high or moderate energy piping located near the system components.

Response 430.267

The diesel generator support systems for each of the three diesel generators are located either in separate areas within the reactor building or located underground, outdoors, adjacent to the reactor building. There are no high or moderate energy pipes in these areas, except for the diesel engine exhaust and starting air systems. The diesel engine support system equipment and controls are adequately separated from the exhaust and air start system piping. The outdoor equipment for the fuel storage & transfer system is located underground and protected against

earthquakes, tornadoes and winds. The fuel oil day tanks are located in separate rooms with 3-hour fire rated concrete walls.

Question 430.268

Provide a failure modes and effects analysis including loss of offsite power situation for the components of each diesel generator support system.

Response 430.268

The diesel generator support systems, [i.e., fuel oil storage and transfer system, cooling water system, starting air system, lubrication system (except keep-warm heaters and associated pumps), and combustion air intake and exhaust system components], are designed and/or qualified to Seismic Category I, ASME Code, Section III, Class 3 requirements. Seismic failure of any support system component is no more likely than that of other Seismic Category I devices.

Even if one were to postulate a worst case failure mode attributable to any one component or any of these support systems, then the failure could result in a loss of that support system to the associated single diesel generator only. The other two diesel generators will be unaffected by such a failure, and adequate core cooling will still be achieved under an accident condition.

The diesel generator support systems do not rely on the offsite power because they are self-contained for their motive power such as pneumatic power for air start system, static-head/gravity for fuel oil system and battery-backed dc power for the electrical controls for starting and operating of the diesel generators. Thus, the loss of offsite power will not degrade or inhibit any support system from performing its function.

Question 430.269

Provide information on location and mounting of controls and instrumentation for all the diesel generator support systems in so far as they relate to protecting the system components from adverse effects due to engine vibration during engine operation (see NUREG/CR-0660 “Enhancement of on-site emergency diesel generator reliability,” Recommendation C.6, Page V-18).

Response 430.269

The diesel generator control panels are located on the floor above the engine room. Measuring and direct-action indication devices such as level, pressure and temperature monitoring instruments and sensors are mounted on the process equipment with adequate support and restraints to protect them against the effects of engine vibrations. Electrical indication lights and annunciators for monitoring of each support system operating and alarm conditions are located on the free-standing control panel.

Question 430.270

ABWR SSAR Table 3.2-1 shows that some safety-related components of the diesel generator support systems are located outdoors onsite (see SSAR page 3.2-24.1, Items R3.3, 4 and 5). Explain how these are protected against the effects of SSE, flood and tornado-missile.

Response 430.270

The diesel generator support system equipment located outdoors onsite comprises the exhaust system silencer, and the fuel oil system storage tanks and associated piping, pumps and valves.

The exhaust system silencer is mounted on the roof of the reactor building with seismic support to withstand forces due to SSE and tornado. This equipment is not subjected to floods.

The fuel oil storage tanks, pump-motors, valves and piping are designed to withstand the adverse loadings imposed by earthquakes, tornadoes and winds. Earthquake protection is provided by the Seismic Category I construction. Tornado and wind protection is provided by locating system components either underground or within the reactor building. The lube oil supply tank, associated piping, valves, and pump-motors are located either underground or within the reactor building.

Question 430.271

The staff agrees with GE that the keep-warm heaters and associated pumps of the diesel generator lubrication system and the air compressors and motors of the diesel generator starting air system need not be nuclear safety class. Except for the above, the staff requires that all piping and components of all the support systems up to the engine interface should be designed, fabricated and installed in accordance with ASME code, Section III, Class 3 requirements. The staff considers the engine interface as being the first connection off the engine block-flanged, welded or screwed. Clarify whether the design of the support systems meets the above requirement. If it does not, provide justification for the deviations. Also, explain how the safety-related portions of the support systems are protected from the effects of failure of non-safety-related portions of the systems.

Response 430.271

The following paragraphs provide discussion on the code classification for the design, fabrication and installation of the diesel generator support system components.

(1) Fuel Oil Storage and Transfer System:

Design and construction of the diesel-generator fuel oil storage and transfer system up to the first connection on the engine skid conforms to ASME Code, Section III, Class 3, Quality Group C. Miscellaneous equipment conforms to applicable standards of NEMA, DEMA, ASTM, IEEE, ANSI, API, or NFPA.

(2) Cooling Water System:

The engine jacket cooling water heat exchanger is furnished in accordance with ASME Boiler and Pressure Vessel Code, Section III, Class 3. Components of the diesel-generator cooling water system are designed to Seismic Category I requirements. Procurement of components is governed by the requirements of 10CFR50, Appendix B, to ensure quality assurance in all places of manufacture and installation.

(3) Starting Air System:

The air compressors, air storage tanks, and valves and piping between the tanks up to first connection on the engine skid are designed in accordance with the requirements of Section III of the ASME Boiler and Pressure Vessel Code. The system is classified Safety Class 3 and Seismic Category I.

(4) Lubrication System:

Except for the electric heater and a keep-warm circulating pump, piping and other components (pumps, valves, tanks and heat exchangers) up to the diesel engine interface, are designed in accordance with ASME Code, Section III, Class 3. Engine mounted piping and other components are required to meet the requirements of ANSI B31.1 and to be pressure tested to 1.5 times design pressure (see Figure 9.5-9).

(5) Combustion Air Intake and Exhaust System:

All piping and ducting is designed in accordance with the requirements of ASME Code, Section III, Class 3.

Failure of the lubrication oil system keep-warm heater and pump will not degrade the diesel engine quick-start capability because a separate keep-warm function is provided by the jacket cooling water system with its independent jacket water circulating pump and an electric heater. Any electrical faults at either the lubrication oil heater or keep-warm pump will be contained to that equipment only, because they are supplied by non safety-related power.

Air compressors, motors and air storage tanks associated with the starting air system are designed to Seismic Category I requirements. Seismic failure of any of these devices is not expected, and at worst would only disable one diesel generator. Each of the three pairs of air compressor motors are supplied power from separate non-Class 1E 480V buses. Each bus receives feeder power from Divisions I, II and III, respectively, as described in Subsection 8.3.1.1.2.1.

Question 430.272

Provide P&IDs for the diesel generator fuel oil and transfer system that include safety classification changes and level, temperature and pressure sensors among other things. (9.5.4)

Response 430.272

A new Figure 9.5-6 has been added with the requested information.

The figure includes level, temperature and pressure sensors, with other components. The interface between fuel and oil transfer system piping and diesel engine mounted piping/components is located at the diesel engine outline boundaries. Pipe specification changes are denoted by bold printed arrows.

The detail design of the diesel auxiliary systems is highly dependent on the specific diesel manufacturer selected. The figure depicts a typical diesel generator fuel transfer, intake and exhaust system. The actual plant design may differ. Such differences will be reviewed as an interface requirement after the selection of the diesel vendor is finalized and the specific diesel engine data is available. This requirement has been added to Subsection 9.5.13, “Interfaces”, as a new Subsection 9.5.13.5.

Question 430.273

Discuss the provisions for measuring fuel oil temperature and pressure and maintaining it within recommended limits.

Response 430.273

The fuel oil temperature for the diesel generators is determined by the location and arrangement of the tanks, piping, pumps and associated equipment in the fuel oil sub-systems. The storage tanks are each buried underground and fuel oil piping to and from the reactor building where the diesel generators are located, is also buried underground. All of the remaining fuel oil tanks and fuel oil equipment are located within the reactor building. The ambient temperature within the diesel generator room is controlled by the HVAC system. In addition, the fuel oil piping is physically separated from all hot surfaces, or other potential ignition sources, within the diesel generator room. This arrangement of tanks, piping and equipment will maintain the temperature within recommended limits, and is not expected to impose any adverse effect on the performance of the diesel generators. There is no automatic provision such as heaters, etc., provided to maintain the fuel oil temperature. Two local fuel oil temperature indicators are provided (one in the suction line and one in the discharge line) from the day tank.

The fuel oil system is designed to be a safety-related system. All piping and components up to the engine skid connection are designed and fabricated in accordance with ASME Code III, Class 3 and Seismic Category I requirements.

The engine-driven fuel oil pump supplies the fuel from the day tank to the diesel engine fuel manifold. A redundant DC motor-driven fuel oil pump is also provided. Fuel oil from the day tank to the suction of these pumps is fed by gravity. There are no powered components to fail. The suction strainer installed in the suction line of each pump prevents any foreign matter from entering the pump and causing a malfunction. This provision will maintain the fuel oil pressure within the required limits. Therefore, no automatic provision is provided. However, to verify the adequate performance of the fuel oil system, there are various pressure switches and

indicators provided to support operator action, if required. Fuel oil pressure indication, low pressure, and pump failure alarms are provided locally with a general trouble alarm in the control room.

Question 430.274

Provide information on the following in the system description:

(1) Type of transfer pump.

(2) Design features for protecting diesel generator fuel oil fill and vent lines from the effects of SSE, flood and tornado-missile.

(3) Clarification on provision of a stick gauge connection for each tank.

(4) Internal and external corrosion protection features for exposed and buried portions of the system including the storage tanks (see Regulatory Guide 1.137 "Fuel Oil Systems for Standby Diesel Generators," Position C.1.g).

(5) Provisions for removal of accumulated water from the fuel storage tanks (see NUREG/CR-0660 Page V-16, Recommendation "a").

(6) Precautions after fill-up of oil tank to minimize potential causes and consequences of fires and explosions (see SRP Section 9.5.4, Item III.7).

Response 430.274

(1) Each transfer pump is driven by an electric motor (480V, 3ø) which is powered from the class IE bus associated with the diesel generator it serves. The reserve capacity of the day tank assures that the diesel will have sufficient fuel during the automatic transfer operation.

(2) Each fuel oil storage tank is provided with a fill connection entering from the top of the vessel. The fill connection and the sample connection are located at grade elevation. Both are capped and locked to prevent entry of moisture. Each vent is of fireproof goose necked line with fine mesh screen to prevent access. This information has been added to Subsection 9.5.4.1.1(4). The capped fill and sample connections and vent pipes are located above the probable maximum flood level thereby preventing the entrance of water and rain. These lines are located within the protected area and routinely observed by plant personnel during performance of their duties.

Devices, piping and supporting structures for most vent and drain systems are designed to ASME Code Section III class 3 and Seismic Category I design. The diesel generator fuel oil storage and transfer equipment is designed, fabricated and qualified to Seismic Category I requirements. In addition, the system is protected from damage by flying debris carried by tornados and hurricanes, from external

floods, and other environmental factors. Even in the extremely unlikely event of a missile hitting and knocking off the storage tank vent, no adverse effects will occur as the vent line will remain intact to grade elevation. The vent is goose-necked to prevent water from entering even under heavy precipitation.

The diesel generator fuel oil system is designed to withstand adverse environmental conditions such as earthquakes, tornadoes, and hurricanes. Protection against earthquake damage is assured by the Seismic Category I design of the system. Protection from hurricanes and tornadoes is provided by locating system components either underground or within the diesel generator building.

(3) Only level switches are provided to monitor the tank level. However, it shall be an interface requirement that the tank specifications include provision for using a stick gauge.

(4) The fuel oil system and its components will be selected to be corrosion resistant. All underground piping are covered with a protective coating and wrapping to guard against corrosion. The material corrosion of the underground tanks is prevented by the protective coating to the tanks and the external corrosion is controlled by the application of cathodic protection (see revised Subsection 9.5.4.3). All above ground piping and components are located in the Seismic Category I structures to protect the components from the detrimental environmental effects. These features will provide adequate protection against internal and external corrosion to the exposed and buried portions of the fuel oil system, including the storage tanks.

(5) Each of the fuel oil storage tanks is provided with a drain that will be used periodically to remove any water accumulation in the tank.

(6) The fuel oil storage tanks are buried underground at different locations. The area is controlled and there is no source of ignition such as open fumes or hot furnaces located nearby. In addition, the fuel oil piping is physically separated from all hot surfaces or other potential ignition sources within the diesel generator building. All storage tanks are located at a sufficient distance away from the plant control room to preclude any danger to control room personnel or equipment resulting from an oil tank explosion and/or fire. Each fuel oil day tank is located in a separate room with 3-hour fire rated concrete walls. The separate location of the tanks is another precaution that will minimize the potential consequences of fire and explosions.

Question 430.275

An event may occur requiring the replenishment of fuel oil in the storage tank without interrupting the operation of the diesel generators. This, in turn, may result in turbulence of the accumulated sediment (at the bottom of the storage tank). Further, the duplex filters in the transfer pump discharge piping may not be able to handle the above problem. Therefore, describe additional features that will be provided for preventing turbulence of accumulated

sediment during filling of the storage tank, so that uninterrupted supply of fuel oil will not be compromised (see Regulatory Guide 1.137, Position C.2.g).

Response 430.275

Each fuel oil storage tank has a fill line that enters at the top of the tank. In order to maintain 7 day storage capacity for each diesel, the tank will be above the "seven-day capacity" required level and will be kept as near the top as practical. These storage tanks are filled by oil trucks. When filling the tanks the oil will enter at a relatively low velocity and will mix with the large volume in the tank. This will minimize the disturbance of any sediment which may have accumulated at the bottom of the tank. A strainer is located in the fuel oil transfer line from the storage tank to the day tank and is monitored for cleanliness by two local pressure indicators. The fuel oil transfer pump is equipped with a suction strainer which is monitored by a pressure switch and a local and common control room alarm. Each engine will also be equipped with a full flow fuel filter which filters the fuel immediately prior to entering the fuel oil header.

There are adequate features to provide an uninterruptable supply of fuel oil to the engine. The day tank is always full of fuel oil and probably will not require transfer of fuel oil from the storage tank to the day tank during replenishment of oil to the storage tank. This will also allow the time to settle the sediments which may have stirred.

Question 430.276

Discuss system compliance (including justification for noncompliance), if applicable, with Positions C.1.e, f and C.2.a, b, d, e, f and h of Regulatory Guide 1.137 (the staff notes that the above guidelines are not addressed in SSAR Section 9.5.4).

Response 430.276

(1) Compliance to Regulatory Guide 1.137, Position C.1.e:

The diesel generator fuel oil storage and transfer system and the portion of the fuel oil systems that are designed to Section III, Subsection ND of the code, are designed to permit periodic testing and inspection of all active components. The fuel oil system operability is demonstrated during the regularly scheduled tests of the diesel generators. The fuel oil system will also be hydrostatically tested prior to startup. (See revised Subsection 9.5.4.4.)

(2) Compliance to Regulatory Guide 1.137, Position C.2.a:

Fuel oil used in the diesel generators meets or exceeds the quality requirements set forth in ASTM D975-1974 and the requirements of the diesel generator manufacturer. Fuel oil stored in the storage tank will be tested for possible deterioration and for detection of unacceptable contaminants, to meet the appendix B, ANSI N195-1976 quality level. Fuel oil in the affected storage tank will be treated (filtration or biocides) to reduce the level to acceptable concentration if level

approaches the established limits. Fuel oil not meeting these requirements will be replaced within a week. (See Subsection 9.5.4.3.)

(3) Compliance to Regulatory Guide 1.137, Position C.2.b & e:

The quality of diesel fuel oil available in storage is checked and logged periodically, and after each operation of the respective diesel generator for a period of 1 hour or longer. Water accumulation in the diesel generator fuel oil storage and day tank is checked monthly, and after each operation of the diesel engine longer than 1 hour. Samples of fuel oil from every tank are analyzed monthly for particulate contamination, in accordance with ASTM D270-1975, "Standard Method of Sampling Petroleum and Petroleum Products."

(4) Compliance to Regulatory Guide 1.137, Position C.2.d.:

Each fuel oil storage tank is provided with a drain connection that will be used periodically to remove any water that has accumulated in the tank. The accumulated condensate will be removed quarterly, and one day after the addition of new fuel.

(5) Compliance to Regulatory Guide 1.137, Position C.2.d:

Each fuel oil storage tank will be examined per ASME Section XI, Article IWD-2000, every 10 years or earlier as required. Each tank will be emptied, and accumulated sediment be removed, prior to examination.

(6) Compliance to Regulatory Guide 1.137, position C.2.h:

Surveillance to ensure the adequacy of the underground cathodic protection will be performed at an interval not to exceed 12 months. The test leads will be maintained to easily obtain the electrical measurement, and the cathodic protection rectifier will be inspected at an interval not to exceed 2 months. All records of each inspection and test will be maintained over the life of the facility to assist in evaluating the extent of degradation of the corrosion protection system. (See revised Subsection 9.5.4.4.)

Question 430.277

Identify the power source for the jacket water circulating system.

Response 430.277

The power sources for the jacket water circulating systems for the three diesels are the diesel buses themselves for Divisions I, II and III, respectively. Each of these motor control centers are nuclear safety-related, Class 1E.

Question 430.278

Provide P&IDs for the diesel generator cooling water system which include safety classification changes. (9.5.5)

Response 430.278

A new Figure 9.5-7 has been added with the requested information and Subsection 9.5.5.2 has been slightly modified for consistency.

The figure includes level, temperature and pressure sensors, with other components. The interface between jacket cooling water system piping and diesel engine mounted piping/components is located at the diesel engine outline boundaries. Pipe specification changes are denoted by bold printed arrows.

The detail design of the diesel auxiliary systems is highly dependent on the specific diesel manufacturer selected. The figure depicts a typical diesel generator jacket water cooling system. The actual plant design may differ. Such differences should be reviewed as an interface requirement after the selection of the diesel vendor is finalized and the specific diesel engine data is available. This requirement has been added to Subsection 9.5.13, "Interfaces," as a new Subsection 9.5.13.5.

Question 430.279

Provide a table of design flow and heat removal requirements for the diesel generator cooling water system. Also, provide the design heat removal capacities of all the coolers or heat exchangers in the system. SSAR Figure 9.2-1e shows intercoolers, lube oil coolers and filtered water coolers; SSAR Section 9.5.5.2 however, uses different terminology to identify some of the above (e.g., air intercooler, jacket water heat exchanger). Identify clearly all the heat exchangers or coolers in the system and clarify whether the combustion air is also cooled by the system. (9.5.5)

Response 430.279

Design flow and heat removal parameters are highly dependent on the specific diesel manufacturer selected. The requested table shall be provided as an interface requirement after the selection of the diesel vendor is finalized, and the specific diesel engine data is available. This requirement has been added to Subsection 9.5.13, "Interfaces," as a new Subsection 9.5.13.6.

The cooling water system coolers are the same as heat exchangers by design. Thus the terminology intercoolers, lube oil coolers and filtered water coolers describe the same devices as air intercoolers, lube oil heat exchangers and jacket water heat exchangers respectively. The combustion air is also cooled by the cooling water system via the air cooler.

The text of Subsection 9.5.5.2 has been modified for consistency of terminology with the new typical diesel generator jacket cooling water system P&ID, Figure 9.5-7. A revised Figure 9.2-1e is provided in response to Question 430.280.

Question 430.280

(9.5.5) Provide information on the following:

(1) Type of jacket water circulating pumps.

(2) Clarification as to whether the system includes a motor-driven jacket water keep-warm pump; describe the keep-warm feature of the system.

(3) Identification of all system heat exchangers or coolers where heat is rejected to the RBCW system (SSAR Subsection 9.5.5.2 states "jacketed manifold and a heat exchanger which is furnished with RCW" whereas SSAR Figure 9.2-1e shows supply of RCW to two intercoolers, one lube oil cooler and one filtered water cooler for each diesel generator).

(4) Type of temperature sensors ("Amot" brand or equal with an expanding wax type temperature sensitive element? - see NUREG/CR-0660, Page V-17, Recommendation under Item 4).

(5) Clarification as to whether the system can be vented to assure that all spaces in the closed loop are filled with water (see SRP Section 9.5.5, Item III.2).

(6) Function of the filtered water cooler shown in SSAR Figure 9.2-1e.

(7) Provisions for isolating non-safety-related portions from safety-related portions of the system.

Response 430.280

(1) The specific information on the type of the jacket water circulating pump is not available until after the selection of the diesel vendor is finalized and the diesel engine data is available. This information shall be supplied as an interface requirement.

(2) The diesel-engine is provided with a keep-warm system. Specific details of this feature, such as system operation and whether it has a motor-driven jacket water circulating pump or not, is not available until after the selection of the diesel vendor is finalized and the diesel engine data is available. This information shall be supplied as an interface requirement.

(3) The engine block heat carried by the cooling water system is rejected to RCW via the jacket water heat exchanger only.

(4) The specific detail as to the type of the temperature sensors is not available until after the selection of the diesel vendor and when the diesel engine data is available. This information shall be supplied as an interface requirement.

(5) The diesel engine cooling water system is adequately vented by an expansion tank vent line. The physical mounting of the piping and pumps is lower than the expansion tank elevated location; thus, a static head will keep the pumps and piping filled with water.

(6) The device designated as a "filtered water cooler" on SSAR Figure 9.2-1e is the same as jacket water cooler. Figure 9.2-1e has been revised to reflect this change in the designation.

(7) The RCW system is a safety-related system. Similarly the diesel-engine cooling water system is qualified to Seismic Category I requirements and 10CFR50, Appendix B. Thus there is no safety-related to non-safety-related interface for this system.

Question 430.281

SSAR Subsection 9.5.5.4 gives little information regarding periodic inspection (e.g., accessibility of areas) and testing (e.g., structural and leak tight integrity of the components, active components and system as a whole). Discuss how the system complies with GDCs 45 and 46 regarding inspection and testing of the system (Note that layout diagrams alone are not sufficient and that these should be supplemented by descriptive information).

Response 430.281

The important components of the diesel-engine cooling water system such as heat exchangers, pumps and piping can be periodically inspected for their proper operation by means of surveillance testing and monitoring instrumentation. Furthermore, the diesel-generator will be periodically tested per RG 1.108 to ascertain starting and load carrying capabilities under normal and accident plant operations. This testing will meet the requirements of GDC 45 and 46. (See revised Subsection 9.5.5.4.)

Question 430.282

Are the diesel generators capable of operating at design loads without secondary cooling (i.e., by the RBCW system) in excess of time needed to restore RBCW supply to the diesel generators cooling water system following a loss of offsite power?

Response 430.282

The diesel generators can operate at design loads without secondary cooling water available for approximately two minutes. The load sequence table for the diesel generator (Table 8.3-4) shows that both the RCW and RSW pumps are sequenced to the diesel within 45 seconds (the time at which the next sequence Block 5 occurs). All critical (safety-related) loads will have transferred to the diesel within the first minute.

Question 430.283
Demonstrate by analysis that normal system coolant leakage over a 7-day period will not exceed the excess amount of coolant contained in the system expansion tank and/or cause loss of positive suction head to jacket water circulating pumps.

Response 430.283
Specific data, such as capacity of the expansion tank, jacket water circulating pump NPSH, and approximate loss of cooling water due to evaporation, drain & overfill spillage will be furnished as an interface requirement after the selection of the diesel vendor is finalized and the diesel engine data is available.

Question 430.284
Identify the operating procedures to ensure that the diesel generators and the associated cooling water system can perform their design functions for extended periods when less than full electrical power generation is required without degradation of their performance or reliability (note that operating procedures identified in SRP Section 9.5.5, Item III.7 are acceptable).

Response 430.284
The diesel generator operating procedures for a particular diesel-engine make and model will require loading of the engine up to a minimum of 40% of full load (or lower load per manufacturer's recommendation) for 1 hour after up to 8 hours of continuous no-load or light load operation. This will be included as an interface requirement.

Question 430.285
Discuss the provisions for controlling the dew point of diesel generator starting air; also, identify the temperature to which the dew point will be controlled.

Response 430.285
The starting air system of each diesel generator is provided with an air dryer to control the dew point of the starting air, and to ensure clean, dry air to the air receiver tank. The dryer will have at least 0.12 m^3/s flow rate capacity, with prefilter and after-filter to remove oil, waste, dust and pipe scales from the air stream. The temperature to which dew point will be controlled will be in accordance with the diesel engine manufacturer. The air dryer requirements have been added to Subsection 9.5.6.2.

Question 430.286
Provide P&IDs for the diesel generator starting air system that include safety classification changes, pressure gauges, relief valves, drain valves and isolation valves among other things. Provide system design requirements such as compressor capacity, power source, and receiver tank capacity. Also, identify the design features which will maintain the receiver pressure within an allowable range. (9.5.6)

Response 430.286
A new Figure 9.5-8 has been added with the requested information (markup attached).

The figure is typical of an acceptable manufacturer, and includes pressure gauges, relief valves, drain valves, isolation valves and other components. The interface between the air system piping and the diesel engine and air modules are signified by the appropriate boundary lines. Pipe specification changes are denoted by bold printed arrows.

The detail design of the diesel auxiliary systems is highly dependent on the specific diesel manufacturer selected. The actual plant design may differ. Such differences will be reviewed as an interface requirement after the selection of the diesel vendor is finalized and the specific diesel engine data is available. This requirement has been added to Subsection 9.5.13, "Interfaces," as a new Subsection 9.5.13.5.

The general requirements for the overall air start system design are as follows:

- Each diesel generator is provided with two complete, redundant and independent starting air systems. Each train includes air storage tank, globe valves, piping, etc., air dryer, air compressor, and air admission valve, etc.
- Each receiver will have sufficient capacity to crank the engine for five automatic or manual starts without recharging the tank. A check valve prevents depressurization of the loop back through the compressor when it is not operating.
- Each motor-driven air compressor will have sufficient capacity to recharge the storage receiver in 30 minutes, after five starts of the diesel engine. The compressors are automatically controlled by pressure switches located at their respective air receivers. The pressure switches automatically start and stop the air compressors, as necessary, to maintain the receiver pressure within an allowable pressure.
- The crossover pipe interconnects the air receivers of the two subsystems within a division to provide the capability for charging both the air receivers from either compressor. The air receiver is also provided with a pressure switch which will annunciate on receiver low pressure, at a local panel, and as a common trouble alarm in the control room to alert the operator.
- Each of the three pairs of air compressors (for the three diesels) are supplied power from separate non-Class 1E 480V buses. Each bus receives feeder power from Divisions I, II and III, respectively, as described in Subsection 8.3.1.1.2.1. The starting air admission valves are operated with a solenoid, and supplied with uninterruptible DC power from a 125 VDC source. The solenoids and their power feeds are from the same division.

Question 430.287

Include devices to crank the engine as recommended by the engine manufacturer as one of the components of the system. Also, identify the air start requirements with regard to the duration of the cranking cycle and number of engine revolutions (see SRP Section 9.5.6, acceptance criterion III.g).

Response 430.287
The requested information will be furnished as an interface requirement after selection of the diesel engine and its manufacturer.

Question 430.288
Identify system provisions for periodic or automatic blowdown of accumulated moisture and foreign material in the air receivers and other critical points of the system. In this context, the staff notes that NUREG/CR-0660 has identified water in the starting air as the "root cause" for most of the troubles reported for the system and has, therefore, strongly recommended refrigerated starting air driers with a minimum flow rate of 250 SCFM between the compressors and the receivers and automatic water drains (see Page V-4 of the NUREG). Clarify whether the system design includes the above features for water removal and if not, provide justification.

Response 430.288
The air start system is equipped with the minimum of 250 SCFM air dryer to remove the moisture from the starting air. This will ensure the availability of dry air to the system and prevent accumulation of moisture in the air receiver and piping. Drain valves are provided for blowdown of any accumulated moisture in the piping and air receiver. A drain valve is located at the bottom of each air receiver and at the critical lowest point in the piping. These blowdown valves are opened periodically to blow the moisture and any foreign material out of the air receivers and pipes. The air dryer and periodic manual draining is adequate to remove the moisture from the system. Therefore, automatic draining has not been provided.

Question 430.289
Discuss how the diesel generator support systems meet the NUREG/CR-0660 recommendations 2.a, 2.b, and 2.d (Page V-6) and 5 (Page V-18) on concrete floors painting) with regard to protection of these systems from the adverse effects of dust and dirt.

Response 430.289
NUREG/CR0660 Recommendation 2.a, Page V-6: The final selection of the diesel engine and its control components has not been completed. However, an interface requirement shall be added to the selection process to ensure that the selection be made on the basis of prudent component design with dust tight enclosures. Most of these components will be located inside dust tight steel cabinets having fully gasketed doors and other openings. This will also reduce the contamination of electrical components from airborne dust and abrasives.

NUREG/CR0660 Recommendation 2.b, Page V-6: The diesel generator is controlled from the local control panel located in the room above the diesel generator room. Most of the major components, such as contactors, relays, control switches, annunciator and indications, etc., are located inside the control panel. The control panel will be fabricated from steel material and will be dust-tight to prevent entrance of airborne particulates. The doors, and all other openings of cabinets and other equipment, will be fully gasketed to prevent dust entrance. The filter-equipped louvers will be provided, as required, for adequate cooling of the equipment.

NUREG/CR0660 Recommendation 2.d, Page V-6: The response to this concern is within scope of the construction company, and the utility who oversees the construction activity. However, it is a prudent industry-wide practice to wet the ground periodically to minimize the dust and dirt near the construction work. An interface requirement will ensure these instructions be included in construction guidelines and procedures.

NUREG/CR0660 Recommendation 5, Page V-18: The concrete floor in the diesel generator room will be painted with concrete or masonry type paint. This is to prevent abrasive dust from the surface "skin" of the concrete from entering into the electrical components.

Question 430.290

Clarify whether the fill connection for the lube oil supply tank is located in the locked diesel generator room or discuss the provisions for preventing lube oil contamination via the fill pipe.

Response 430.290

The lube oil supply tank is located in the locked diesel generator room, and oil refill is done only by authorized personnel. Therefore, the contamination of oil is prevented.

Question 430.291

Provide P&IDs for the diesel generator lubrication system that include safety classification changes, temperature, pressure and level sensors among other things. Include the pre-lube provisions in the P&IDs. (9.5.7)

Response 430.291

A new Figure 9.5-9 has been added with the requested information and Subsection 9.5.7.2 has been modified for consistency.

The figure includes level, temperature and pressure sensors, with other components. The interface between the lubrication system piping and diesel engine mounted piping/components is located at the diesel engine outline boundaries. Pipe specification changes are denoted by bold printed arrows.

The detail design of the diesel auxiliary systems is highly dependent on the specific diesel manufacturer selected. The figure depicts a typical diesel generator lube oil system. The actual plant design may differ. Such differences will be reviewed as an interface requirement after the selection of the diesel vendor is finalized and the specific diesel engine data is available. This requirement has been added to Subsection 9.5.13, "Interfaces," as a new Subsection 9.5.13.5.

Question 430.292

Provide design criteria (pump flows, operating pressure, temperature differentials, cooling system heat removal capabilities, electric heater characteristics) for the diesel generator lubrication system.

Response 430.292

The selection of the diesel generator vendor has not been completed. The information regarding lubrication system design criteria will be furnished as an interface requirement after the selection of the diesel vendor is finalized and the data is available.

Question 430.293

Describe how the diesel generator lubrication system (1) complies with NUREG/CR-0660, recommendations 1 and 2 (see Pages V-9 and V-10 of the NUREG) regarding duration of the pre-lube period and starting and stopping of the pre-lube pump, and (2) precludes excessive pre-lubrication of the diesel engine turbocharger. In this context, clarify whether the keep-warm oil circulating pump can perform the function of the pre-lube pump. Also, provide information on how the pre-lube operation will be monitored. Note that the staff requires the monitoring/alarm circuit for the pre-lube system to be safety-related (Class 1E) to provide reliable indication of the system operation so that the operator can perform timely corrective action in case of failure.

Response 430.293

NUREG/CR0660 Recommendation 1, And 2, Page V-9 And V-10: The diesel engine is provided with a lube oil priming pump to provide pre-lubrication to engine components and to keep the engine lube oil piping to nearly full condition. The lube oil priming pump will be operated intermittently to keep the lube oil piping pressurized. Therefore, during any engine start, lube oil pressure will develope very rapidly with only the engine-driven pump. This will avoid lack of lubrication to engine components and will adequately provide pre-lubrication. Therefore, the lubrication prior to engine start, as recommended in Recommendation 1, Page v-9 of NEREG/CR-0660, is not required.

This feature will also preclude excessive pre-lubrication. The same prelube pump is used for the warm oil circulating function. When the lube oil temperature reaches its lower limit, the lubricating oil will be heated by the lubricating oil heater, and the lubricating oil priming pump will automatically operate to circulate the oil through the engine. The safety-related (Class 1E) pressure-indicating switch is provided to monitor the discharge pressure from the lubricating oil primary pump. Low pressure is alarmed to provide information to the operator so he can take the timely corrective action.

Question 430.294

Describe system protective features to prevent unacceptable crank case explosions and to mitigate the consequences of such an event.

Response 430.294

The following description has been added at the end of Section 9.5.8.2.1: In order to protect the crank case from accumulation of fumes and possible consequent fire or explosion, the crank case is kept at negative pressure by vacuum blowers. The gases are exhausted to an outside vent via a 150A pipe which passes through the reactor building wall (see Figure 9.5-6). Pressure sensors will detect unacceptably high pressure conditions in the crank case, and will annunciate

this condition to the operator. This signal will also shut down the diesel unless a LOCA signal is present (Table 8.3-5).

Question 430.295

Identify all the components in the flow paths for the diesel generator combustion air intake and exhaust system (e.g., air intake silencer, turbocharger, combustion air aftercooler). If the above include flow control devices (louvers, dampers), can the system function if there is failure of a single active component?

Response 430.295

The diesel generator combustion air intake and exhaust system air flow path comprises the following components.

I. Intake System

(1) Components located off the diesel engine skid.

(a) Air filter with a differential pressure gauge

(b) Grill in the intake duct

(c) Intake plenum, duct & piping

(d) Intake silencer

(e) Flexible connector

(f) Connecting hardware, reducer, etc.

(2) Components mounted on the diesel engine skid.

(a) Turbo charger

(b) Cylinders

(c) Suction valves

(d) Intake manifold

(e) Connecting hardware, adapter, etc.

(f) Air intercooler

II. Exhaust System

(1) components located off the diesel engine skid.

(a) Exhaust duct

(b) Connecting hardware

(c) Exhaust silencer

(2) Components mounted on the diesel skid.

(a) Cylinders

(b) Discharge valves

(c) Exhaust manifold

(d) Turbocharger

(e) Exhaust duct adapter

The intake air structure comprises the inlet plenum and intake filter, but it does not use a louver. The exhaust air vents to the atmosphere at the exhaust silencer and there is no louver at the exhaust end. Thus, there is no component that can fail in a manner to obstruct the air intake or exhaust flow path.

Question 430.296

NUREG/CR-0660 recommends (Page V-15, recommendations 1.a and 1.b) that the piping for the diesel generator room ventilation air should be separate from that used for the combustion air and that the supply of the combustion air should preferably be through piping directly from outside the building and at least 20 feet from the ground level through proper filters. ABWR SSAR Subsection 9.5.8.2.1 states that each diesel engine takes combustion air from its own diesel generator room which, in turn, receives its air supply from the room air ventilation system. Explain why an advanced design like ABWR does not comply with the NUREG recommendations in so far as they relate to keeping the ventilation and combustion air supplies separate. Also, explain how the air exhaust silencers mounted at the roof of the reactor building are protected from tornado missiles. Further, contrary to what has been stated, reactor building arrangement drawings in SSAR Section 1.2 do not show intake and exhaust locations for the system; include these locations in the applicable drawings.

Response 430.296

Each diesel engine combustion air intake duct is independent of the diesel generator room ventilation air, yet both share the same intake filter system. The air for both combustion and ventilation passes directly from the reactor building outside wall, through filters, at Elevation 23500 (Figure 1.2-10 or 9A.4-6). The air flows through large floor grids to Elevation 18100 where it enters a partitioned area on the floor just above the diesel generator room (Figure 1.2-9 or 9A.4-5). Fans in the floor direct ventilation air to the diesel generator room, but separate inlet plenums and ducts direct combustion air through the floor to the throats of the diesels below. Thus, within the diesel generator room, the intake air is separately routed from the ventilation air. Section 9.5.8.2 has been clarified per the attached mark-up. The outside air enters the reactor building at approximately 9.14 m above grade, which is well above the recommended height of 6.1 m.

The exhaust air silencers are mounted at the roof of the reactor building and properly secured to withstand forces, and be able to function during design basis events such as seismic vibrations, wind, hail, tornados, rain and snow storms.

The reactor building arrangement drawing (Figure 1.2-10 or Figure 9A.4-6) shows locations for diesel engines A, B & C intake air (wiggly arrows in zones RB-R7, RF-R1 and RF-R7 respectively). As explained above, this is also the inlet for the diesel room ventilation air.

The exhaust air is discharged from the exhaust silencers located on top of the reactor building as shown on Figure 1.2-13 (or the right side of Figure 9A.4-8), row-column RB-R7, RF-R1 and RF-R7 respectively for diesel engines A, B, and C.

Question 430.297

Discuss the ability of the intake filters to provide sufficient filtered combustion air for the entire time period when emergency power is required assuming maximum particulate concentration at the intake.

Response 430.297

The maximum continuous duration when the diesel generator(s) are required to operate is for mitigation of a seven-day loss of coolant accident (LOCA) recovery period. The intake filters are not subjected to large debris, airborne during a windstorm, because they are protected by the grills through which the outside air must pass before entering the filters. Secondly, a particulate matter small enough to pass through the grill may cause partial plugging of the filters. A plugged filter can easily be detected by a differential pressure gauge monitoring the filter. Thus, if for any reason a filter gets clogged during a continuous seven-day diesel operation, that filter can be replaced or unclogged.

If it is necessary to shut down the diesel during filter unclogging or replacement, operation should be fully resumed in a short time. Shutdown cooling could be continued by either one of the other two diesels and its respective divisional equipment. Alternatively, any one of the three diesel generator loads could be assumed manually by the combustion turbine generator (CTG) as shown on the power distribution single-line drawing (Figure 8.3-1). With four standby power sources capable of supplying sufficient power for safe shutdown, a rolling cleaning schedule for the inlet filters should be able to cope with the most severe dust conditions for an indefinite period.

Question 430.298

Provide a system P&ID showing safety classification changes for the diesel generator combustion air intake and exhaust system. (9.5.8)

Response 430.298

A new Figure 9.5-6 has been added with the requested information.

The figure shows both the intake and exhaust system, and the fuel transfer system. The interface between the intake/exhaust piping and the diesel engine module is denoted by the outline boundary. Pipe specification changes are denoted by bold printed arrows.

The detail design of the diesel auxiliary systems is highly dependent on the specific diesel manufacturer selected. However, the intake/exhaust portions of the drawing have been specifically redrawn to be consistent with the ABWR SSAR design. The fuel transfer portion of the drawing is consistent with typical diesel suppliers, but may differ in the final design. This is noted as an interface requirement in the response to Question 430.272.

Question 430.299

Identify the diesel engine operation procedures that will minimize or avoid incomplete combustion (see NUREG/CR-0660, recommendation B.3a, Page V-11). (9.5.8.)

Response 430.299

Based on a specific engine make and model, the engine vendor sometimes recommends operational procedures that minimize incomplete combustion.

One such operational procedure is to avoid as much as possible or otherwise restrict the no-load or low-load operation of the engine/generator for prolonged periods of time; or operate the engine at nearly full-load following every no-load or low-load (20% or less) operation lasting for a period of 30 minutes or more. This recommendation will be implemented as an interface requirement in the diesel engine operational procedures.

Question 430.315

ABWR SSAR Section 9.5.1 provides fire hazards analyses for fire areas the reactor building only. Additionally, the section does not describe the specific reactor shutdown method that will be used for each of the fire areas in the reactor building [see Response A2]. (9.5.1) Provide the following:

(1) Fire hazards analysis for each fire area outside the reactor building which is within the scope of the standard design (e.g., control building, turbine building, radwaste building, service building) [see Response A1]. Note that on receipt of such information, additional information may be requested.

(2) Description of specific reactor shutdown method for each fire area. The description should discuss how the chosen method provides safe shutdown or dedicated shutdown, whichever is applicable for the given area, that is, how the shutdown method meets Positions C.5.b or C.5.c of BTP CMEB 9.5-1 “Guidelines for Fire Protection for Nuclear Power Plants” of SRP Section 9.5.1 “Fire Protection Program” [see Response B1]. Specifically, the response for each fire area should include among other things, an associated circuit analysis (that is, how the common bus, common enclosure and spurious signal concerns including high/low pressure interface breaches will be eliminated) [see Response B2], available shutdown

equipment including cables [see Response B3], required operator actions and the time when these have to be completed [see Response B4], and required repairs [see Response B5], if any, for achieving cold shutdown within the allowed time. Additionally, for the control room, the response should identify the specific design provisions to ensure the capability to transfer control of needed hot shutdown equipment to a remote shutdown panel without recourse to any hot shutdown repair [see Response B6].

(3) Lighting and communications provisions as they relate to the fire protection program for the ABWR. Your response should indicate how the program meets the specific guidelines stated under Positions C.5.g(1) through g(4) of BTP CMEB 9.5-1 [see Response C]. Note that cross referencing ABWR SSAR Sections 9.5.2 "Communication Systems" and 9.5.3 "Lighting and Servicing Power Supply System" will not be an adequate response, since these sections do not discuss all the above guidelines.

(4) Interface requirements for referencing applicants for fire areas not within the scope of the standard design (e.g., ultimate heat sink area). For such areas, the interface requirements should call out for applicable information requested in Items (1), (2), and (3) above [see Response D].

Response 430.315

(1) The fire hazard analysis for the turbine building, radwaste building, service building and plant yard area has been submitted as part of Amendment 14. The control building fire hazard analysis is nearing completion and will be provided in a future amendment.

(2) A new Subsection, 9.5.1.2.11, has been added.

For the ABWR Standard Plant Design, the systems which provide the core cooling function and have the capability of bringing the plant to a safe shutdown condition, are made up of three independent divisions. The logic which initiates the operation of these systems is made up of four divisions and is located in the control room. Automatic operation of a division is initiated by two-out-of-four logic which reverts to two-out-of-three logic, if one division is disabled (e.g., due to the fire). Safe shutdown following a fire is assured, due to the fact that the systems in any one of the three safety divisions are capable of accomplishing safe shutdown. Also the safety divisions are separated by three-hour fire rated barriers, with the except in of the following exceptions:

(1) Main control room

All four safety divisions are present in the main control room. Alternate safe shutdown capability is provided from the remote shutdown panel.

(2) Primary containment

All four safety divisions are present in the primary containment. The primary containment is inerted during operation so that a fire in the containment is not credible. In spite of this, separation within the containment is maintained by as much distance as possible. Also, there is no combination of active components within the containment which could fail due to a fire and prevent safe shutdown.

(3) Special cases

There are some instances where equipment from more than one safety division is purposely mounted in the same fire area. For example, in order to provide redundancy for leak detection initiation, leak detection thermocouples for two or more divisions are mounted in the same room to control the single division of equipment contained in the room. The acceptability of each of these cases is analyzed and reported in Section 9A.5.

Even with these limited exceptions for separation by fire barriers, the plant design is such that complete burnout of a given fire area may occur and there will still be two divisions of functionally available equipment, either division of which is capable of accomplishing plant shutdown. Compliance of the design to this objective is confirmed by the fire hazard analysis.

Since the operator will always have two divisions of the safe shutdown equipment available for use, he may use either the normal or emergency operating procedures, as appropriate, to safely shut the plant down. These procedures would probably lead him to use one of the multiple non safety-related systems that would normally be available to him for shutdown, but no credit is taken in the analysis for the non safety-related systems.

Item 8 of the fire hazard analysis of each individual room points out that, for each safety-related equipment or safe shutdown equipment, redundant safety-related equipment is available in a different fire area to accomplish the function of the equipment assumed to be involved in the fire or fire suppression activities. An item-by-item listing of this equipment is given in Table 9A.6-1. In addition, major safety-related equipment which may be used to accomplish safe shutdown is summarized in Table 9A.2-1.

(a) The ABWR design utilizes safety-related systems in normal operating modes to meet the BTP CMEB 9.5-1 position C.5.b. The implementation method of the above requirement is met by C.5.b.(1)(a) and C.5.b.(2)(a) of BTP CMEB 9.5-1, regardless of the location of the fire.

(b) There are no common buses or enclosures for divisional equipment required for safe shutdown. The Division IV battery chargers and uninterruptible power supply are powered from Divisions I or III, 480 VAC. Complete loss of Division IV will not prevent the proper operation of Divisions I, II or III as the logic would revert to 2-out-of-3 from its normal 2-out-of-4 operation. In

addition to the electrical isolation provided by the double feed breakers, (MCC load and panel input breakers), mechanical interlocks prevent Division IV from simultaneously being fed from Divisions I and III sources.

Spurious signals due to a fire will occur only within the division of the fire area in which the fire is occurring. Once it is determined that there is a fire, further generation of spurious signals may be prevented by deenergizing the power supplies for the division experiencing the fire. This would leave two full divisions of safe shutdown equipment available to shut the plant down and allow the fire suppression efforts to be carried out without the fear of electrical shock or short circuits.

The RHR shutdown cooling inboard and outboard suction isolation valves (E11-F010A,B,C and E11-F011A,B,C respectively) and the RHR injection valves (E11-F005A,B,C), and their associated piping, have been designated as “high/low pressure interfaces”. If a fire occurs in the control room, the worst case would be loss of the digital signal from the Class 1E multiplexer to the remote multiplex (RMU) in the division where the fire has occurred. The fire cannot generate a spurious digital signal to change the valve position. Therefore the valve remains in the same position (normally closed). The system initiation logic will revert from 2-out-of-4 logic to 2-out-of-3 logic. If the valve was opened prior to the fire occurrence (the reactor must have been depressurized already), then the valve remains open and the safe shutdown operation will continue by the other two redundant divisions. If a fire occurs in the area from the RMU to the MCC (outside of the control room), the fire may generate a spurious signal, but the low pressure system is protected as follows:

(1) The RHR shutdown cooling inboard suction isolation valves (E11-F010A,B,C) are electrical Divisions I, II, and III respectively. Their redundant outboard valves (E11-F011A,B,C) are electrical Divisions II, III, and I respectively. Therefore, if the inboard suction isolation valve opens (normally closed) due to a spurious signal generated by the fire, the low pressure system is protected against the high pressure by its redundant (back up) outboard suction isolation valve, which is in a different division and therefore unaffected by the fire. The inboard valve would protect the interface for a fire affecting the outboard valve.

(2) One of RHR injection valves (E11-F005A,B,C) may open (normally closed) by a spurious signal generated by a fire, but each valve is protected against high pressure by its series check valve (E11-F006A,B,C).

(a) Except for a control room fire, two complete divisions, each of which is unaffected by the fire and capable of shutting the plant down, are available during and after a fire in any fire area of the plant. Shutting down the plant from the remote shutdown panel utilizes equipment from both Divisions I and II.

The fire hazard analysis includes the cabling serving the equipment as part of the analysis, even though they are not listed as separate items on Table 9A.6-1.

(a) The operator actions are determined by the normal operating procedures, utilizing the two unaffected divisions. Also, the emergency operating procedure (Section 18A.2) would be completely adequate if the operator chooses to use them to get to safe shutdown.

(b) There are no required repairs to reach cold shutdown for a fire any place in the plant. The design allows complete burnout of any fire zone.

(c) The equipment controlled from the remote shutdown panel is capable of bringing the plant to cold shutdown with complete burnout of the control room with no repairs. Power supplies and controls for the remote shutdown panel are completely separated from the control room power supplies and controls.

(d) The portable sealed beam battery powered hand lights, the portable radio communication system, and the emergency communication system (independent of the normal plant communication system) are out of the ABWR Standard Plant design scope. It is an interface requirement that the applicant design comply with the BTP CMEB 9.5-1, position C.5.g(1) - (4). The applicant should supplement subsection 9.5.2, and 9.5.3 accordingly as applicable. Subsections 9.5.2.6 and 9.5.13.4 have been added to reflect the interface requirements, and Subsections 9.5.3.1.2 and 9.5.3.2.4 have been revised accordingly (markup attached).

ABWR safety protection system instrumentation, which includes the essential multiplexing system (EMS) and safety system logic and control (SSLC), uses fiber optic data links as the transmission medium. Thus, in-plant areas between protection equipment cabinets for safety-related functions will not be susceptible to electromagnetic or radio frequency interference (EMI/RFI). However, near the electrical to optical interfaces at the transmitting and receiving cabinets, the equipment internals must be protected from EMI/RFI effects, such as that produced by keying portable radio transceivers near control cabinets.

Protection can take the form of RF shielding of instruments and cabinets, proper instrument grounding and power distribution grounding, and filtering of input/output signal and power line conductors, as recommended in ABWR system design documents.

Tests to demonstrate immunity of safety protection equipment to radio transceiver broadcasts will be developed using guidelines described in the following documents:

(1) ANSI/IEEE C37.90.2 - 1987, IEEE Trial-Use Standard, Withstand Capability of Relay Systems to Radiated Electromagnetic Interference from Transceivers.

Section 5.5.3 of this standard describes tests for digital equipment using clocked logic circuits. Thus, appropriate pre-operational or periodic surveillance tests will be

developed for protective relays, if used, and for microprocessor-based EMS/SSLC equipment specified in ABWR design documents.

(2) ANSI C63.12-1987, American National Standard for Electromagnetic Compatibility Limits - Recommended Practice.

Plant areas that cannot be shown to be EMI/RFI compatible will be posted as "NO RADIO USE" zones.

(a) The following areas are out of the ABWR Standard Plant design scope, and shall be included in the applicant fire protection program:

(i) Main transformer
(ii) Equipment entry lock
(iii) Fire protection pumphouse
(iv) Ultimate heat sink

The applicant's fire protection program shall comply with the SRP Section 9.5.1, with ability to bring the plant to safe shutdown condition following a complete fire area burnout without a need for recovery.

Question 430.316

The fire hazard analysis provided as Appendix 9A listed several components within the rooms of each fire area in the reactor building. However, specific cables (power and instrumentation) were not identified in the equipment listings (Tables 9A.b-1 and 9A.b.2). The failure of these cables will have to be included in a safe shutdown analysis. Additionally, the equipment listed in these two tables showed that equipment powered by separate divisions of AC power (Division 1 and 2 for example) are located in the same reactor building fire zones. From the information in Appendix 9A, it is not possible to determine if the failure of this equipment could affect the operability of required safe shutdown equipment in other fire areas. This equipment should be addressed in the safe shutdown analysis, including an associated circuit analysis. (9.5.1)

Response 430.316

(1) The power and instrumentation cables for each piece of equipment are considered to be part of the equipment listed in Tables 9A.6-1 & 9A.6-2, and therefore, are not listed separately (see Table 9A.6-1 and 2 notes). The fire hazard analysis included these cables as part of the equipment located within the fire area, and their failure was considered as part of the equipment failure in the safe shutdown analysis.

A new Subsection, 9.5.1.2.11 has been added. Information for the remainder of the response to this question is taken from there.

The systems whose primary functions are to provide core cooling, and to bring the plant to a safe shutdown condition, have three independent mechanical and electrical safety-related divisions (mechanical Divisions A, B, C and electrical Divisions I, II, III). Each division is capable of bringing the plant to a safe shutdown condition whether the system is initiated manually or automatically. The plant layout is such that redundant portions of safety-related systems are located in different fire areas, therefore if one division becomes disabled due to a fire (complete burnout is acceptable) there are still two independent redundant divisions available to provide core cooling. The system initiation logic is two-out-of-four logic, but if one division becomes disabled (e.g., due to a fire) the system initiation logic reverts to two-out-of-three logic. The initiation circuitry is located in the control room.

There are some instances where, for overriding technical reasons, equipment from more than one safety division is purposely mounted in the same fire area. For example, the equipment mounted in Room 110 of the reactor building is for the Division I portion of the RHR system. There are also two leak detection thermocouples of Divisions I and II mounted in the same room. The Division II leak detection thermocouple provides redundancy for leak detection initiation to control the single division of equipment contained in the room. If the room is burned out completely, the loss of Division I is acceptable, because there are two independent redundant divisions (II, & III) available in different fire areas of the building to bring the plant to a safe shutdown condition. The loss of the Division II leak detection thermocouples is acceptable because their loss will not impair the operation of the remaining portion of the Division II leak detection system (because of the nature of the thermocouple itself and its operation, the loss would be isolated locally. The acceptability of each case of intruding divisional devices, such as this, is analyzed on a case-by-case basis and reported in Section 9A.5.

In summary, each safety-related device (cables included) is assigned to a safety division. External to the control room and primary containment, devices of different safety divisions are located in different fire areas unless over-riding technical considerations dictate exceptions. All exceptions are analyzed and the analysis reported in Section 9A.5.

With the above facts known and a set of fire area separation drawings, (Figure 9A.4-1 through 9A.4-32), it is possible to confirm the acceptability of the chosen locations for the devices listed on Tables 9A.6-1 and 9A.6-2.

(2) Due to the attention paid to separation and the isolation capabilities of the fiber optic data transmission systems, there are no associated circuits in the ABWR Standard Plant Design.

Question 430.317

Subsection 9.5.1.2.1 should be expanded to include the fire protection water supply system.

Response 430.317
The fire protection water supply system is discussed in Subsection 9.5.1.2.5 as part of Amendment 14.

Question 430.318
Section 9.5.1.2.2 states that a manually operated carbon dioxide (CO2) fire suppression system will be provided for the diesel generated rooms, including the day tank rooms. This does not correspond to the guidance provided in NUREG-0800, CMEB BTP 9.5-1, Section C.7.i which specifies automatic fire suppression for the emergency diesel generators. This section should be changed to show automatic fire suppression or expanded to justify how manual suppression provides either equivalent or superior protection.

Response 430.318
The carbon dioxide system has been replaced with an automatic foam sprinkler system in the diesel generator rooms and the day tank rooms. See the response to Question No. 430.319 for revision to Subsection 9.5.1.2.2.

Question 430.319
Subsection 9.5.1.2.7 indicates a 30 second time delay discharge will be provided for the carbon dioxide fire suppression systems. This feature is appropriate for automatic systems but not for manually operated systems. This section should be changed to state that a time delay discharge will not be provided for manually operated systems, such as those systems provided for the emergency diesel generator rooms in case the manual systems are justified and retained in the ABWR design.

Response 430.319
In accordance with EPRI ALWR requirements, the CO2 system has been replaced with an automatic foam sprinkler system. Subsection 9.5.1.2.7 and other parts of Section 9.5 have been revised accordingly.

Actuation of the fire extinguishing foam within the diesel generator rooms is automatic.

Question 430.320
Subsection 9.5.1.2.8, smoke control, refers to Section 6.4 and Subsection 9.4.5.
(6.4)(9.4.5)(9.5.1)

(1) Section 6.4.4.2 states that “In the smoke removal mode, the purge flow through the control building provides three air changes per hour in order to sweep atmospheric contaminants out of the air.” An air change every 20 minutes will be effective for smoke control only for the very smallest fires in very large volumes. This section should be changed and expanded to describe how smoke will be removed from fire areas and to provide the technical bases, including test data, to support assumptions used in the smoke removal systems design.

(2) Section 9.4.5.x.x states for the various areas, where applicable, that "fire protection has been evaluated and is described in Subsection 9.5.1." No descriptive material is contained in these subsections pertaining to smoke removal capability of the normal HVAC system.

Response 430.320

(1) Description of the smoke control system has been added to Subsection 9.5.1.0.6. In summary, the design provides:

(a) Venting of fire areas to prevent undue buildup of pressure due to a fire.

(b) Pressure control across the fire barriers to assure that any leakage is into the fire area experiencing the fire.

(c) Pressure control and purge air supply to prevent backflow of smoke and hot gases when opening fire barrier doors for access for manual fire suppression activities.

(d) Augmented and directed clean air supply to provide a clean air path to the fire for fire suppression personnel.

(e) Smoke control by fans and systems external to the fire area experiencing the fire.

(f) Removal of smoke and heat from the fire by fans operating with clean, cool supply air.

(g) Generally no fire dampers in the smoke removal path. The above features are provided using practices recommended by NFPA 92A, Recommended Practice For Smoke Control Systems, 1988 Edition. Portions of the design are also based on data obtained from fire tests conducted at the Southwest Research Institute.

(2) As indicated in response (1), Subsection 9.5.1.0.6 has been added to include a description of the smoke control system.

Question 430.321

Section 9.5.3.1.1(5)(f) should be expanded as follows: "Battery power supplies for lights in harsh environments (including high/low temperature areas) shall be located where the environment will nor degrade the batteries, or the batteries shall be qualified by test for the environment."

Response 430.321

Subsection 9.5.3.1.1(5)(f) & (g) have been revised.

Question 430.322
Section 9A.2.1.1 should be expanded to include NFPA 20, "Centrifugal Fire Pumps."

Response 430.322
Subsection 9A.2.1.1 has been updated.

Question 430.323
Section 9A...2.4(3) implies that walls with fire (9.5.1) resistance ratings less than 3 hours will be allowed as fire walls. This is not acceptable. Section 9A.2.4(3) should be clarified to clearly state that all fire barriers will have a minimum fire resistance rating of 3 hours.

Response 430.323
Paragraph 3 of Subsection 9A.2.4 has been revised as requested.

Question 430.324
Section 9A.2.4(11) states that redundant safe shutdown cables "are not permitted together in the same cable tray." Actual separation of redundant safe shutdown cables should be specified, since literal compliance with this prohibition against the case of a single cable tray for redundant cables, could still result in an unacceptable condition.

Response 430.324
Paragraph 9A.2.4(11) has been revised as requested.

Question 430.325
Section 9A.3.1(8) states that one of the methods of protection for safety-related equipment and associated cabling is spatial separation (isolation). The staff does not recognize as acceptable for use in an advanced reactor design any method of protection which relies only upon spatial separation. We recognize the need for open communication between compartments inside containment in order to be able to relieve and equalize pressure following a high energy line break. Therefore, the use of structural walls inside containment as fire barriers to separate safety-related systems (cabling, components and equipment), even though such walls may not fully enclose the equipment requiring separation, is acceptable in intent. Care must be taken in actual system layout, however, to assure that line-of-sight exposure between components requiring separation does not exist, and that a sufficient labyrinth is provided between the separated components to assure that fire spread does not occur. (9.5.1)

Response 430.325
Separation between redundant equipment within the containment is achieved by distance, which is kept at a maximum. All four safety divisions are present in the primary containment. The primary containment atmosphere is inerted with nitrogen during plant operation, therefore, the probability of a fire in the containment is not credible. The containment spray system is available for suppression of fires which may occur during shutdown when the containment is not inerted. Also, there is no combination of active components within containment which

could fail due to a fire and prevent safe shutdown. Subsection 9A.3.1(8) has been revised accordingly.

Question 430.326

Section 9A.4.1.1.x under (9) "Consequences of Fire" for several different rooms or areas, states "smoke from a fire would be removed by the normal HVAC system, if it has not been isolated. If the normal HVAC system has been isolated, smoke removal is by the SGTS system." In question 430.320 above we pointed out the limitations of ventilation systems that provided only three air changes per hour to function as a smoke removal system during fires. Other technical considerations aside (such as possibility of soot fouling), the capacity of the SGTS is so small relative to the building volumes served that it is clearly not capable of performing as an effective smoke removal system. Please describe how smoke removal from these areas will be accomplished if the normal HVAC system is not available. (9.5.1)

Response 430.326

The fire hazard analysis for the reactor building has been revised. Paragraph (9) of Subsections 9A.4.1.1.3 through 9A.4.1.1.36 has been revised to state "smoke from a fire will be removed by the normal HVAC system operating in its smoke removal mode". See the response to Question 430.320 for a discussion of how the HVAC systems function in their smoke removal mode.

Smoke control is accomplished by fans external to the fire area and therefore they do not fail as a result of the fire. SGTS is not used for smoke removal.

Question 430.327

Section 9A.4.1.1.18 under (2) states no core cooling is provided in this room, while under (9) GE states that "the provisions for core cooling systems backup are defined in Section 9A.2.5." Which statement is correct?

Response 430.327

Some of the boundaries between fire areas have been re-defined such that Room No. 120, described in9A.4.1.1.18, is now part of Room No. 123. This area is safety-related and does contain equipment involved in the core cooling function. The corridor area designated as Room No. 123 is described in the revised Subsection 9A.4.1.1.24.

Question 430.328

Section 9A.4.1.1.26 under (2) states yes - safety-related, however, under (9) states, "the function is not safety-related and its loss is acceptable." Which statement is correct?

Response 430.328

Paragraph 9A.4.1.1.26 (2) was incorrect, and has been revised.

Question 430.329
Section 9A.4.1.1.33, Subsection (9) "Consequences of Fire" states that "access to the operating handles for the manually actuated valves in the adjacent room would be temporarily reduced." What does this mean and what is the postulated effect? Are manual actions in the adjacent room contemplated for safe shutdown?

Response 430.329
Paragraph 9 of Subsection 9A.4.1.2.10(2), (4) and (9) have been corrected.

Question 430.330
Section 9A.4.1.2.10.Subsections (2) and (9) are mutually ambiguous. Is the equipment in this area safety-related and does it provide core cooling?

Response 430.330
Subsections 9A.4.1.2.10(2), (4) and (9) have been corrected.

Question 430.331
Sections 9A.4.1.2.18, 9A.4.1.2.19 and 9A.4.1.2.20 all state in Subsection (2) that equipment in each room is safety-related and provides core cooling. However, in each case, Subsection (9) states that, "the postulated fire assumes the loss of the function. The function is not safety-related and its temporary loss is acceptable." Since these statements appear to be contradictory, please clarify.

Response 430.331
Subsections 9A.4.1.2.18, 9A.4.1.2.19 and 9A.4.1.2.20 Paragraph 9 have been revised to support the statement made in paragraph 2 of the same subsections.

Question 430.332
Section 9A.4.1.2.25 states in Subsection (2) that equipment in the room is safety-related. However, Subsection (9) states that, "the function is not safety-related, therefore, the loss of the function is acceptable." Which statement is correct?

Response 430.332
Subsection 9A.4.1.2.25 Paragraph 2 has been revised to support the statement made in Paragraph 9 of the same subsection.

Question 430.333
Section 9A.4.1.2.32 has the same statements as Section 9A.4.1.2.25 (Question 430.332 above and the same question applies.

Response 430.333
Subsection 9A.4.1.2.32 Paragraph 9 has been revised to support the statement made in paragraph 2 of the same subsection.

Question 430.334

Section 9A.4.1.4.4 Diesel Generator A Room
Section 9A.4.1.4.10 Diesel Generator C Room
Section 9A.4.1.4.15 Diesel Generator B Room (9.5.1)

(1) See comments about CO2 protection provided for Diesel Generator Room in Question 430.318 above relative to the description of the manual total flooding CO2 system in Subsections (7).

(2) See Question 430.326 above relative to use of normal HVAC or SGTS systems for smoke removal. In addition to those concerns, we question the availability of the SGTS to the Diesel Generator Rooms.

Response 430.334

(1) The following subsections have been revised.

Subsection 9A.4.1.4.4 (6), (7), and (11)
Subsection 9A.4.1.4.10 (6), (7), and (11)
Subsection 9A.4.1.4.15 (6), (7), and (11)
Subsection 9A.4.1.6.2 (6), (7), and (11)
Subsection 9A.4.1.6.10 (6), (7), and (11)
Subsection 9A.4.1.6.13 (6), (7), and (11)

(2) See the response to Question 430.326 concerning the use of normal HVAC for smoke control. It is correct that SGTS is not available to the diesel generator rooms.

Question 430.335

Section 9A.4.1.4.26 states in Subsection (9) that the safety-related valves in this area will fail closed upon loss of actuation power. How is this accomplished? (9.5.1)

Response 430.335

Table 20.3.16-1 identifies the safety-related valves which are located in the main steam tunnel (MST). Subsection 9A.4.1.4.26(9) was misleading and has been corrected. Not all valves fail closed, but they are all designed to fail with acceptable consequences as explained below:

Nuclear Boiler System—The loss of motor operated (MO) feed water injection valve B21-F001A,B is acceptable because it is backed up by air operated (AO) feed water check valve B21-F003A,B. Although the feed water check valve is located in the MST, and is subjected to the same environment, a fire cannot cause loss of function of the check valve. Also, there is a check valve B21-F004A,B as an additional backup valve to the backup AO check valve B21-F003A,B located in primary containment.

The loss of AO B21-F009A,B,C,D or MO B21-F012 is acceptable, because each is backed up by redundant valves B21-F008A,B,C,D and B21-F011, respectively, located in the primary containment; which is a different fire zone.

RHR System—The loss of MO RHR injection valve E11-F005A is acceptable because it is backed up by AO testable check valve E11-F006A. Although the back up testable check valve is located in the MST, and is subjected to the same environment as the RHR injection valve, there are AO check valve B21-F003A (located in the MST) and check valve B21-F004A (located in primary containment) in series with the backup AO testable check valve E11-F006A. These valves close, if required to do so, as they cannot be held open by their test operator (or operator) against backflow.

R**CIC System—**The loss of MO RCIC injection valve E51-F004 is acceptable because it is backed up by AO check valve E51-F005. Although the back-up AO check valve is located in the MST, and is subjected to the same environment as the RCIC injection valve, there are AO check valve B21-F003A (located in the MST) and check valve B21-F004A (located in primary containment) in series with the backup AO check valve E51-F005. These valves close, if required to do so, as they cannot be held open by their operator against backflow. RHR AO warm up valve E11-F036A, and RCIC AO equalizing valve E51-F026 are normally closed, and de-energized. Loss of these valves is acceptable because each one is in series and backed up by AO check valve B21-F003A (located in the MST), and check valve B21-F004A (located in the primary containment—a different fire zone). These back up valves cannot be held open by their operator against backflow. Table 9A.6-2 has been revised.

Question 430.336

Section 9A.4.1.5.04 DG Control Panel and Service Corridor A (Room 514). Section 9A.4.1.5.08 DG Control Panel C and Service Corridor C (Room 532). Section 9A.4.1.5.16 DG Control Panel B and Service Corridor B (Room 522).

Subsection (9) for all three of these rooms states that fire could result in temporary loss of access to the B diesel generator HVAC room and that functional backup is provided by the A and C diesel generators. Although this subsection also states that continuous access to the HVAC is not required, we question how all three of these rooms (each related to a separate diesel generator unit) can cause loss of access to the same Train B diesel generator HVAC room.

Response 430.336

Paragraph 9 of Subsection 9A.4.1.5.16 was incorrectly repeated in Subsections 9A.4.1.5.4 and 9A.4.1.5.8 and has been revised. Also, a correction has been made to the title of Subsection 9A.4.1.5.4.

Question 430.337

Section 9A.4.1.5.23 - Why is loss of the stack monitors as stated in Subsection (9) acceptable?

Response 430.337
Corrections/clarifications have been made to Subsection 9A.4.1.5.23(1), (2) and (9). The stack radiation monitor is dual channel system, and does not provide any safety and/or core cooling function. Therefore, the loss of the stack monitoring function is acceptable.

Question 430.338
Sections 9A.4.1.6.02 through Section 9A.4.1.6.37 - Question No.430.326 above finds unacceptable reliance upon the SGTS for smoke removal when the normal HVAC system is not available. Subsection (9) in each of there sections references reliance upon the SGTS which we understand to be the same as the SGTS. Therefore, the same concerns noted in Question No. 430.326 apply here also. (9.5.1)

Response 430.338
Subsections 9A.4.1.6.1 through Section 9A.4.1.6.38 have been revised similar to those of Response 430.326.

Question 430.339
Section 9A.4.1.7.01 states in Subsection (2) that systems in the room are safety-related but in Subsection (9) states that the functions are not safety-related. Which statement is correct? (9.5.1)

Response 430.339
The equipment in the room is safety-related, Subsections 9A.4.1.7.1(2) & (9) have been revised to indicate this.

In addition, Subsection 9A.5.5.13 has been added to support the reference in (9) for discussion of consequences of fire to radiation monitors.

Question 430.340
Section 9A.4.1.7.12 states in Subsection (9) that four divisions of the stack radiation monitors are located at the base of the stack and could be lost. Why is it acceptable to loose all four of these monitors?

Response 430.340
Subsections 9A.4.1.7.11(2) & (9) and 9A.4.1.7.12(2) & (9) have been revised. There are two RIP transformers on the roof, and four stack radiation monitors at the base of the stack. This equipment is not safety-related, and therefore, loss of their function is acceptable. The diesel generator division 2 silencer is safety-related, and is located on the roof. Loss of the diesel generator silencer is acceptable because the function can be replaced by the redundant portion of the system which is located in the different location of the building.

Question 430.341
Section 9A.5.1 reads as follows:

"9A.5.1 Piping Penetrations, Reactor Building Piping penetrations through the drywell shell have unique design considerations. The stress and containment requirements along with the temperature inputs to the concrete walls leave little design latitude. Experience has shown that some of these penetrations for high energy piping may not contain a 3-hour fire-resistive barrier such as have provided throughout the other ABWR buildings. Penetration details are not available at this stage of the plant design."

The staff understands this to mean that GE is proposing that we approve in advance deviations from the requirement to provide 3-hour fire rated penetration seals for certain as yet unidentified high energy piping. This is not acceptable. The applicant should state their intention to provide 3-hour fire rated penetration seals for all high energy piping or, as a minimum, state those conditions when such seals cannot be provided and what will be installed as a substitute. Sufficient technical detail must be provided to allow the staff to approve such deviations in principle. (9.5.1)

Response 430.341

A sentence stating "It is an interface requirement that the detailed design provide completely equivalent construction to tested wall assemblies or testing has been required." has been added at the end of the paragraph of Subsection 9A.5.1 with reference to interfaces Subsection 9.5.13.7.

Question 430.342

Section 9A.5.5.1 states that conduit from the separate divisions are separated from each other to meet IEEE 384. The IEEE 384 separation distances are primarily to prevent electrical signal interference between or among conductors. They do not necessarily provide adequate separation to satisfy fire protection needs. This statement should be expanded to assure that fire protection separation requirements are satisfied. (9.5.1)

Response 430.342

The last six paragraphs of Subsection 9A.5.5.1 have been revised.

Question 430.343

Discuss conformance with requirements of 10CFR50.63 "Loss of All Alternating Current Power," as related to the support systems regarding (1) sufficient amount of water (condensate storage system), (2) sufficient flow path and delivery system (reactor core isolation cooling system), (3) decay heat removal capability (automatic depressurization system), (4) sufficient valve position indication and closure capability for containment isolation (containment isolation system), (5) sufficient compressed air capacity for station blackout (SBO) components for core cooling and/or containment isolation (compressed air system), (6) suitable environmental conditions inside control room and other areas served to protect personnel and SBO equipment including instrumentation and controls (control room area ventilation system and engineered safety feature ventilation system), (7) common mode failures of sufficient fuel oil supply, transport and storage recharging capability, sufficient cooling and compressed air, adequate lubrication and air intake and exhaust for the diesel engine (emergency diesel engine

support systems), if used as an alternate AC power source, and (8) battery capacity to assure that core is cooled and an appropriate containment integrity is maintained independent of preferred and onsite emergency AC power in the event of a station blackout for the specified duration and recovery therefore in accordance with the guidance of Regulatory Guide 1.155, station blackout, NUMARC 87-00 and NUMARC 87-00 supplementary guidance dated December 27,1989.

Response 430.343

The ABWR Standard Plant is designed to meet 10CFR50.63. It is capable of maintaining core cooling and containment integrity for at least 8 hours, following the loss of offsite and onsite AC electrical power. Subsection 9E.2.1.2.2 discusses the station blackout performance in detail. All specific concerns regarding systems operation (1-8) and their compliance with 10CFR50.63 are addressed and discussed in Subsection 19E.2.1.2.2.

Table 20.3.16-1 Safety Related Valves Located in the Main Steam Tunnel (MST) (Response to Question 430.335

MPL No.	VLV TYP	Valve Description	VLV Norm Condition	Valve Actuation	Remarks Valve	Back Up Acceptability Code	Failure
B21-F001A/B	MO	Feedwater Injection	open	manual		B21-F003A/B	(1),(2)
B21-F003A/B	MO	Feedwater Check Vlv	energized	auto/manual	FC on LOP	B21-F004A/B	(2),(4)
B216-F009A/B/C/D	AO	MSIV Outboard Valve	energized	auto.manual	FC on LOP	B21-F008A/B /C/D	(3)
B21-F012	MO	MS Bypass/Drain Isolation Outbrd	open	auto.manual isol signal	auto clos	B21-F011	(3)
E11-F005A	MO	RHR Injection	close	auto/manual	auto clos when RPV>=30.66 kg/sq cm	E11-F006A	(1),(2)
E11-F006A	AO	Testable Chk Vlv	de-energized		manual,FC on LOP	B21-F003A	(1),(2),(4)
E51-F004	MO	RCIC Injection	close	auto/manual		E51-F005	(1),(2)
E510F005	AO	Testable Chk Vlv	de-energized		manual, FC on LOP	B21-F003A & B21-F004A	(1),(2),(4)
E51-F026	AO	Equalizing Valve	de-energized		manual, FC on LOP	B21-F003A & B21-F004a	(1),(2),(4)

The lose of the above valves are acceptable because:
(1) The listed backup valve is also in the MST.
(2) The backup check valve (restable check valve) can not be held open by its operator (test operator) against backflow.
(3) There is a redundant valve located in primary containment.
(4) The backup valve is located in primary containment.

20.3.17 Response to Seventeenth RAI — Reference 17

Question 210.51

The information in this section should be revised to more nearly reflect the current status of this issue. GSI II.E.6.I originally consisted of the following sub-issues:

(1) In-situ testing of motor operated valves (MOV)

(2) In-situ testing of pressure isolation valves (PIV)

(3) Reevaluation of thermal overload protection devices for motor operated valves.

(4) In-situ testing of check valves

Sub-issues 1, 2 and 3 are no longer considered to be part of II.E.6.I. Sub-issue I was subsumed by the staff's evaluation of responses to Generic Letter 89-10, "Safety-Related MOV Testing and Surveillance". Sub-issue 2 was subsumed by Generic Safety Issue 105, "Interfacing Systems LOCA in Light-Water Reactors". Sub-issue 3 is considered to be resolved for the ABWR on the basis of the unconditional commitment in the SSAR Table 1.8-20 to Regulatory Guide 1.106, "Thermal Overload Protection for Electric Motors on Motor-Operated Valves". Sub-issue 4 remains unresolved at this time. During a meeting on April 7,1986 between the staff and industry representatives, it was agreed that industry would initiate an aggressive program to resolve the check valve issue. Since that time, the Institute (EPRI), the Nuclear Power Operation (INPO), the Electric Power Research Institute (EPRI), the Nuclear Industry Check Valve Group (NIC) and the staff have made some progress in addressing this issue. However, as stated in a letter to Mr. Z. T. Pate, President of INPO, dated April 20, 1990, the staff continues to find weakness in the efforts of individual licensees to improve the performance of check valves. To assist the staff in its continuing evaluations and perspectives regarding the resolution of the check valve issue. The staff has not yet received a complete response to this request.

The staff does not agree that the information in the "ABWR Resolution" of Subsection 19B.2.2 in the SSAR is sufficient to resolve this issue for the ABWR. The exceptions to position indication of check valves will require some clarification. However, the staff prefers that this type of information be included as a part of the ASME Section XI Inservice Test Program for safety-related pumps and valves which is discussed in the SSAR, Subsection 3.9.6. Therefore, GE is requested to revise Subsection 19B.2.2 related to sub-issue 4 to reflect a more broad commitment to the collective industry and NRC activities relative to implementation of the resolution of issues on in-situ testing of check valves. In addition, the staff will need to complete its review of the ABWR Inservice Testing Program before this issue can be considered resolved.

Since sub-issue 1 has been subsumed, Subsection 19B.2.2 should also include a commitment to provide a response to Generic Letter 89-10 which will be applicable to the ABWR. (19B.2.2)

Response 210.51

This response is contained in revised Subsection 19B.2.2.

The ABWR resolution to in-situ testing of valves is presented in Subsection 3.9.6. A plan of periodic testing that implements the ASME on Code 1990, Subsection ISIC and Appendix I, for safety related valves is outlined.

To insure MOV operability when subjected to the design basis conditions considered during both normal operation and abnormal events, the detail design is committed to a test program that is responsive to Generic Letter 89-10. GL 89-10 is an interface requirement listed in Table 1.8-22.

Question 210.52

Recent BWR operating experience indicates that the isolation valves between the RCS and low pressure interfacing systems may not adequately protect against overpressurization of low pressure systems.

For ABWRs, pressure isolation valve instrumentation and controls are provided to (1) prevent opening shutdown cooling connections to the vessel in any loop when the pool suction valve, discharge valve, or spray valves are open in the same loop, (2) prevent opening the shutdown connections to and from the vessel whenever the RCS pressure is above the shutdown range, (3) automatically close shutdown connections when RCS pressure rises above the shutdown range, and (4) prevent operation of shutdown suction valves in the event of a signal that the water level in the reactor is low.

The ABWR has been designed to minimize the possibility of an interfacing system LOCA in the following ways. The low pressure systems directly interfacing with the RCS are designed with 500 psig piping which provides for a rupture pressure of approximately 100 psig. In addition, the high/low-pressure motor-operated isolation valves have safety-grade, redundant pressure interlocks. Also, the motor-operated emergency core cooling system (ECCS) valves will only be tested when the reactor is at low pressure. All inboard check valves on the ECCS will be testable and have position indication. Additionally, design criteria used by GE require that all pipe designed to 1/3 or greater of reactor pressure requires two malfunctions to occur before the pipe would be subjected to reactor system pressure. The pipe designed to less than 1/3 reactor pressure requires at least three malfunctions before the pipe would be subjected to reactor system pressure.

Position—Since ABWR low pressure systems are designed only for 500 psig rather than the full RCS design pressure of 1250 psig, the ABWR design should provide (1) the capability for leak testing of the pressure isolation valves, (2) valve position indication that is available in the control room when isolation valve operators are deenergized and (3) high-pressure alarms to warn control room operators when rising RCS pressure approaches the design pressure of attached low-pressure systems and both isolation valves are not closed. It is the staff's position that GE should confirm that the above design features are incorporated into the ABWR design.

GI-96 was related to PWRs which considers the failure of the low pressure isolation valves between the RCS and RHR system in PWRs. The issues contained in GI-96 now are incorporated into GI-105. (19B.2.15)

Response 210.52

(1) The response for leak testing of reactor coolant pressure isolation valves is contained in the revised Subsection 3.9.6.

(2) All PIVs in RHR, HPCF, and RCIC systems have position indication in the control room. The SLC system outboard valve (motor-operated) is provided with local as well as control room position indication.

(3) The RHR system "Low Pressure Flooder" (LPFL) high/low interface is provided with a high pressure alarm at the downstream of the pump discharge check valve. A rising reactor coolant pressure will trigger the alarm when it approaches the set point pressure (less than the low pressure piping design pressure) and both PIVs are open to pressurize the piping.

The RHR system "Shutdown Cooling" (SDC) high/low interface is provided with a high pressure alarm between the outboard PIV and the pump suction valve. A rising reactor coolant pressure will trigger the alarm when it approaches the set point pressure (less than the piping design pressure) and both PIVs are open to pressurize the piping.

The HPCF and RCIC systems high/low interface is provided with a high pressure alarm in the low pressure piping which is at the upstream of the pump. All downstream piping from the pump are designed for higher pressure. A rising reactor coolant pressure will trigger the alarm when it approaches the set point pressure (less than the piping design pressure) and both PIVs plus the pump discharge check valves are open. Therefore, three barriers are required to be removed before the high pressure reactor coolant can pressurize the low pressure piping.

The SLC system high/low interface does not have a high pressure alarm in the low pressure piping. However, three check valves and a motor-operated valve separate the high and low pressure portions of the system. This is considered to be adequate design for protection of low pressure piping from the high pressure reactor coolant.

(4) The design off low pressure piping connected to RCS is established at 2.6 MPaG to assure the piping can withstand the full reactor operating pressure based on ultimate rupture strength (URS) criteria. The 2.4 MPaG design pressure is established to reduce the possibility of a LOCA outside containment by designing to the extent practical to an URS at least equal to full reactor coolant system (RCS) pressure. This is achieved by assuring that the design pressure exceeds the ratio of ASME Code allowable stress to the ASME Code ultimate (rupture) stress multiplied by the full RCS pressure (7.1 MPaG).

Question 210.53

Position—The record of relief-valve failures to close for all boiling-water reactors (BWRs) in the past 3 years of plant operation is approximately 30 in 73 reactor-years (0.41 failures per reactor-year). This has demonstrated that the failure of a relief valve to close would be the most likely cause of a small-break loss-of-coolant accident LOCA). The high failure rate is the result of a high relief-valve challenge rate and a relatively high failure rate per challenge (0.16 failures per challenge). Typically, five valves are challenged in each event. This results in an equivalent failure rate per challenge of 0.03. The challenge and failure rates can be reduced in the following ways:

(1) Additional anticipatory scram on loss of feedwater,

(2) Revised relief-valve actuation setpoints,

(3) Increased emergency core cooling (ECC) flow,

(4) Lower operating pressures,

(5) Earlier initiation of ECC systems,

(6) Heat removal through emergency condensers,

(7) Offset valve setpoints to open fewer valves per challenge,

(8) Installation of additional relief valves with a block- or isolation-valve feature to eliminate opening of the safety/relief valves (SRVs), consistent with the ASME Code,

(9) Increasing the high steam line flow setpoint for the main steam line isolation valve (MISV) closure,

(10) Lowering the pressure setpoint for MSIV closure,

(11) Reducing the testing frequency of the MSIVs,

(12) More-stringent valve leakage criteria, and

(13) Early removal of leaking valves.

An investigation of the feasibility of reducing challenges to the relief valves by use of the aforementioned methods should be conducted. Other methods should also be included in the feasibility study. Those changes which are shown to reduce relief-valve challenges without compromising the performance of the relief valves or other systems should be implemented. Challenges to the relief valves should be reduced substantially (by an order of magnitude).

Resolution—The staff requires the following additional information to complete the review on this item:

In the NRC position for this item, 13 possible ways are listed for reducing the challenge and the failure rates of safety relief valves. These items that will be implemented for the ABWR should be listed, and the basis for concluding that they reduce the challenge rate substantially should be provided. (19A.2.6)

Response 210.53

(1) Additional Anticipatory Scram on Loss of Feedwater

The ABWR design has implemented reduction of the isolation setpoint from Level 2 to Level 1 1/2. Following a scram at Level 3, the RCIC is initiated at Level 2. The associated reduction in the isolation setpoint from Level 2 to Level 1 1/2 provides a different way to reduce SRV challenges due to loss of feedwater from the NUREG-0626 method as provided in the "definition" of Paragraph 3.1.2.5, NEDO-24951 [Reference 1A.4(6)] (anticipatory signals on the feedwater pump). This improved isolation logic is considered an equally effective way of reducing SRV challenges (resulting from loss of feedwater), as compared with the method suggested in the NRC position.

(2) Revised Relief Valve Actuation Setpoints

The response for ABWR is identical to the response for direct-acting type SRVs provided in Paragraph 3.1.3.2, NEDO-24951. In summary, there are many factors affecting the values established for SRV setpoints. The direct-acting type valve setpoints are already near their maximum possible values. An additional incremental increase will not cause significant reduction in SRV challenges.

(3) Increased Emergency Core Cooling (ECC Flow)

(4) Lower Operating Pressures

The detailed response to these two items in contained in Paragraph 3.1.4.6, NEDO-24951. This response is entirely applicable to ABWR. The modifications suggested by these two items of the NRC position cannot be justified, primarily because of the steep rate of pressure rise following a transient, which precludes early enough initiation of ECC by any practical means so that significant reduction of the number of SRVs that open during the initial blowdown might be achieved.

(5) Earlier Initiation of ECC Systems

Plant design pressure is a basic front-end design value. Once established, this number drives the design of plant systems and equipment. Economic considerations are one

factor operating against decrease of reactor operating pressure. Another equally important factor acting to oppose the reduction of operating pressure is one of the basic groundrules of ABWR design, which is to use existing technology to the extent practicable. Existing technology is based on current reactor operating pressures which are essentially the same as that selected for ABWR.

(6) Heat Removal Through Emergency Condensers

Emergency condensers were used on earlier BWRs (BWR-2s and some early BWR-3s), after which they were replaced by RCIC systems. For the very large power output of the ABWR design, the economic and structural penalties associated with the use of such condensers are such that the use of RCIC in the ABWR design is preferred.

(7) Offset Valves Setpoints to Open Fewer Valves per Challenge

The response is the same as described in Paragraph 3.1.3.3, NEDO-24951. Only one or two SRVs participate in isolation cycling. The drift and statistical uncertainty in SRV setpoints creates a defacto offsetting of setpoints in any case.

(8) Installation of Additional Relief Valves with A Block or Isolation Valve Feature to Eliminate Opening of the Safety-Relief Valves (SRVs) Consistent with the ASME Code

The response for ABWR is the same as that described in Paragraph 3.1.4.5, NEDO-24951. To summarize:

(a) Additional valves would be required or the ASME Code would be violated.

(b) The new valves, along with the outlet of the associated relief valves, would have to be designed to reactor pressure ($\geq$1250 psig).

(c) The problems associated with inadvertent closure of block valves are introduced.

(9) Increasing the High Steamline Flow Setpoint for Main Steam Isolation Valve (MSIV) Closure

The response to this item is the same as that provided in Paragraph 3.1.3.4, NEDO-24951. Review of 249 total isolation events at 32 plants over the last ten years reveals that those isolation incidents that have occurred relating to high flow setpoints appear to be related overwhelmingly to human error during MSIV testing and not to operational transients, and the reduction in SRV challenges due to increased high steam flow setpoint appears to be negligible.

(10) Lowering the Pressure Setpoint for MSIV Closure

As discussed in Paragraph 3.1.1.2, NEDO-24951, current U.S. plants are set in the range of 5.68 MPaG. The analytical limit for ABWR was reduced to 5.17 MPaG.

(11) Reducing the Testing Frequencies of the MSIVs

The response for ABWR is identical to that provided in Paragraph 3.1.4.4, NEDO-24951. The frequency of MSIV testing is based on ASME B&PV Code, Section XI recommendations. The extent of test frequency reduction possible without adverse impact on the reliability of isolation capability could only be expected to result in a 2-3 percent reduction in SRV challenges. The disadvantage of increased risk due to less frequent assurance of MSIV operability is of greater concern than the advantage gained in reduction of challenges to SRVs.

(12) More Stringent Valve Leakage Criteria

and

(13) Early Removal of Leaking Valves

The response to these items are the same as the responses for direct-acting SRVs as provided in Paragraph 3.3.4, NEDO-24951. Leakage in direct-acting SRVs does not result in a significant increase in spurious opening of SRV and resulting plant blowdown. There are other reasons why it is desirable to detect SRV leakage (to permit planned refurbishments or replacement during the next planned outage)—but these are related to suppression pool heating and challenges to the RHR system, not to the SORV concern. Special effort directed toward unplanned or special outages dedicated to early removal/replacement of leaking SRVs is therefore not a major concern and is not planned for ABWR.

Question 220.16

Generic safety issue 82 “Beyond Design Basis Accidents in Spent Fuel Pools” is concerned with the loss of the pool water which may result in a fire in the pool causing a release of fission products. In the ABWR resolution, it is indicated that the spent fuel pool will be designed to withstand a design basis earthquake without pool drainage, and will be arranged to prevent cask movement over the pool, which will be accomplished through the use of a separate cask loading pit. Was a cask drop in the cask loading pit considered? Since the cask loading pit is adjacent to the spent fuel pool. In addition, it appears that the fuel pool is near the staging area for the reactor vessel head, indicate the effect on the fuel pool of vessel head drop on the adjacent staging area. (19B.2.14)

Response 220.16

For reasons cited in Subsection 19L.10.3(1), Spent Fuel Cask Drop Accident, the probability of dropping a spent fuel cask during handling is extremely low. For the same reasons, the probability of dropping a vessel head on the stagging area is also extremely low. The potential

for draining the spent fuel pool due to drop of a heavy load is addressed in Subsection 19L.10.5, Drainage of Fuel Pool.

Question 220.17

Generic Safety Issue No. 103 "Design for Probable Maximum Precipitation" (PMP) is concerned with the difference in the determination of PMP. BY using the recently developed NOAA/NWS procedures which are believed to be more realistic, PMP estimates larger than those obtained by previously used methodologies may lead to higher flood levels. Therefore, in ABWR resolution on Page 19B 2-47, specify that the recently developed NOAA/NWS procedures will be used for determining PMP for a specific site. (19B.2.17)

Response 220.17

The use of NOAA/NWS procedures has been added to Subsection 19B.2.17.

Question 252.16

(1) The applicant should define bolting in detail. Bolting in this context should include bolts, studs, embedments, machine/cap screws, threaded fasteners, and associated nuts and washers.

(2) Define high strength bolting and medium strength bolting in terms of material and mechanical properties.

(3) Provide bolting manufacture process (e.g., heat treated, quenched, tempered, etc.,).

(4) Identify specific safety related items (e.g., equipment and piping systems) where the high strength bolting or medium bolting will be used.

(5) Discuss how to avoid the intergranular stress corrosion cracking (IGSCC) of bolting in a BWR hydrogen environment.

(6) Identify thread lubricants that will be used and identify chemical compounds in them.

(7) The applicant discussed the ALWR Resolution initiated by the Atomic Industrial Forum/Metal Properties Council Task Group and BWR Requirements in the EPRI-ALWR Requirements Document. It is unclear whether the applicant will follow the resolutions and requirements. (19B.2.12)

Response 252.16

(1,5,7) The response is contained in the changes to Subsection 19B.2.12.

(2,3,4,6) The response is an interface requirement contained in the revised Subsection 19B.2.12.

Question 260.4

The ALWR Resolution Summary for issues I.F1 and II.F.5 states:

(1) The designer shall identify any structures, systems, or components (items) that are not safety related but for which provisions beyond normal industry practice are judged to be needed to provide desired reliability and availability.

(2) At the same time, specific surveillance, maintenance provisions (appropriate for specific item and desired reliability and availability) shall be identified for those items.

The NRC evaluation is that ALWRs should have a Reliability Program to ensure that the facility is operated and maintained within enveloping PRA assumptions throughout its life. The NRC anticipates that these new (Reliability Program) requirements will effectively subsume the I.F.1 and II.F.5 issues and these issues can be considered resolved.

The ABWR Resolution states:

(1) The ABWR application of quality system requirements satisfies the ALWR resolution.

(2) An interface requirement (Section 19B.3.1) is included to ensure that quality system requirements will be provided during construction and operation.

(3) Therefore, this issue is resolved for the ABWR.

Request for Additional Information 1—It is not clear to the staff that the ABWR SSAR describes how points 1 and 2 of the ALWR Resolution Summary (above) are to be satisfied. That is, how is the ABWR designer identifying items for which provisions beyond normal industry practice are judged to be needed? And how are specific surveillance/maintenance provisions being identified for those items? SSAR Table 3.2-1 is used to show the quality assurance that is applied to plant items. The table indicates that a quality assurance program meeting 10CFR50 Appendix B either does or does not apply. In some instances, where Appendix B does not apply, there is reference to a footnote regarding quality assurance. Such references are neither wide-spread enough nor specific enough to really meet an objective of the classification system which is to assign appropriate Quality Control and Quality Assurance measures.

The SSAR should be clarified in this regard, or justification should be given for not doing so. For example, footnote "u" regarding quality assurance for non-safety-related fire protection items should make it clear that a quality assurance program meeting the guidance of Branch Technical Position CMEB 9.5-1 (NUREG-0800) will be applied to each such item. Similarly, for non-safety-related radioactive waste management items, a footnote should make it clear that a quality assurance program meeting the guidance of Regulatory Guide 1.143 will be applied during design and construction. The safety parameter display system (or its equivalent), though not safety-related, should have a quality assurance program beyond normal industry practice applied, and this should be clear in Table 3.2-1. Generic Letter 85-06, "Quality Assurance Guidance for ATWS Equipment That Is Not Safety Related," is also applicable. If GE has not already done so, it should ascertain whether there are other ABWR plant items within the scope of points 1 and 2 of the ALWR Resolution summary (above) and revise Table 3.2-1 accordingly if required. Then the ABWR Resolution should reference Table 3.2-1 to show how GE has resolved TMI issues I.F.I. and II.F.5 for the ABWR.(19B.2.1)

Response 260.4

(1) Question

How is the ABWR designer identifying items for which provisions beyond normal industry practice are judged to be needed?

(1) Response

Clarified as requested in response to questions (3) through (9).

(2) Question

How are specific surveillance/maintenance provisions being identified for those items?

(2) Response

Clarified as requested in response to questions (3) through (9).

(3) Question

Table 3.2-1 is used to show the quality assurance that is applied to plant items. The table indicates that a quality assurance program meeting 10 CFR 50 Appendix B either does or does not apply. In some instances, where Appendix B does not apply, there is reference to a footnote regarding quality assurance. Such references are neither wide-spread enough or specific enough to really meet an objective of the classification system which is to assign appropriate Quality Control and Quality Assurance measures. The SSAR should be clarified in this regard, or justification should be given for not doing so.

(3) Response

Table 3.2-1 footnote “e” has been revised and will apply the new “E” QA requirement to all NNS items as indicated in Table 3.2-1.

(4) Question

Footnote “u” regarding quality assurance for non-safety-related fire protection items should make it clear that a quality assurance program meeting the guidance of Branch Technical Position CMEB 9.5-1 (NUREG-0800) will be applied to each such item.

(4) Response

Table 3.2-1 footnote “t” has been revised. (Footnote “u” applies to other systems in addition to Fire Protection, whereas “t” applies only to the fire protection system.)

(5) Question

For non-safety-related radioactive waste management items, a footnote should make it clear that a quality assurance program meeting the guidance of Regulatory Guide 1.143 will be applied during design and construction.

(5) Response

Table 3.2-1 footnote “p” has been revised.

(6) Question

The safety parameter display system (or its equivalent), though not safety-related, should have a quality assurance program beyond normal industry practice applied, and this should be clear in Table 3.2-1.

(6) Response

The safety parameters display system is a part of the process computer system, item C7 on Table 3.2-1.

(7) Question

Generic Letter 85-06, “Quality Assurance Guidance for ATWS Equipment That Is Not Safety Related,” is also applicable.

(7) Response

A new footnote “cc” to Table 3.2-1 and new line items under reactor recirculation system and CRD system have been revised. Also, reference footnote “cc” applies to non-safety-related items under SLCS items 9 & 10. (Note, as currently indicated in Table 3.2-1, Appendix B is applied to the majority of the SLCS).

(8) Question

If GE has not already done so, it should ascertain whether there are other ABWR plant items within the scope of points (1) and (2) of the ALWR Resolution summary (above) and revise Table 3.2-1 accordingly if required.

(8) Response

No other items have been identified at this time.

(9) Question

Then the ABWR Resolution should reference Table 3.2-1 to show how GE has resolved TMI issues I.F.I. and II.F.5 for the ABWR.

(9) Response

Subsection 19B.2.1 has been revised to incorporate this information.

Question 260.5

The statement in the ABWR SSAR, "Applicants referencing the ABWR design shall have a Quality Assurance Program satisfying the requirements of Section 19.B.2.1(2) including the right to impose additional environmental requirements," does not appear to accurately reflect the requirements of 19B.2.1(2). The "right to impose additional environmental requirements" is not as encompassing as "the right to impose additional requirements to supplement the 10CFR50, Appendix B requirements." It is not clear what is meant by "environmental" requirements.

Request for Additional Information 2—Clarify that applicants referencing the ABWR design shall have the right to impose additional requirements to supplement the 10CFR50, Appendix B requirements, or justify not doing so. (19B.3.1)

Response 260.5

Clarifications are included in revised Subsection 19B.3.1.

Question 260.6

The response to this item states: "Interface requirement, see Subsection 19A.3.6." Subsection 19A.3.6 states: "... (Reference Subsection 19A.2.4.)" The response to Subsection 19A.2.4 states: ".. This requirement is not applicable to the ABWR. It applies only to PWR-type reactors." This series of references takes us from an NRC requirement that procedures provide for evaluation and feedback of related experience in a timely manner to the ABWR designers and constructors to a conclusion that there is no requirement.

Request for Additional Information 3—Clarify the response to 19.2.41, paying particular attention to the references, or justify not doing so. (19A.2.41)

Response 260.6

The reference 19A.2.4 has been changed to 19A.2.41 in Subsection 19A.3.6.

Question 260.7

The response states: "This issue is addressed in Appendix 19B."

Request for Additional Information 4—Since Appendix 19B has many pages, please narrow the reference to item 19B.2.1 in Appendix 19B. (19A.2.42)

Response 260.7

Subsection 19A.2.42 has been revised to incorporate this item.

Question 420.137

Position—Licensees shall provide a description of any additional instrumentation or controls (primary or backup) proposed for the plant to supplement existing instrumentation (including primary coolant saturation monitors) in order to provide an unambiguous, easy-to-interpret indication of inadequate core cooling (ICC). A description of the functional design requirements for the system shall also be included. A description of the procedures to be used with the proposed equipment, the analysis used in developing these procedures, and a schedule for installing the equipment shall be provided.

Resolution—The staff requires the following additional information to complete the review on this item:

GE refers to Topical Report SLI-8211, "Review of BWR Reactor Vessel Water Level Measurement System," in their response. Generic Letter No. 84-23, "Reactor Vessel Water Level Instrumentation for BWRs," discusses in detail the potential improvements required as a result of the topical report review. How the ABWR design satisfies the requirements of GL No. 84-23 should be explained in detail. (19A.2.30)

Response 420.137

One of the criteria specified in GL 84-023 is that the vertical drop of the reactor pressure vessel (RPV) water level reference leg instrument lines from the condensing chamber to the drywell wall must be minimized to reduce level indication errors caused by high drywell temperature. The maximum allowable drop would allow the post accident RPV water level instrumentation to indicate that the RPV water level is at the bottom of the normal operating range for the worst case flashing condition (i.e. all the water column in the instrument line within the drywell has been expelled) with the actual RPV water level just above the RPV wide range water level instrumentation lower tap. For many BWR/4s, BWR/5s, and BWR/6s, this limit results in a maximum allowable vertical drop on the order of 2.7 meters.

For the ABWR, the vertical drop in the drywell for the RPV water level reference leg instrument lines from the condensing chamber to the drywell wall has been limited to 0.9 meters. This is specified in Note 9, Figure 5.1-3.

The lower end of the normal RPV water level range is RPV Low Water Level 4, as this is the setpoint for the RPV low water level alarm. The post accident RPV water level instrumentation is considered to be the RPV wide range water level instrumentation. RPV Low Water Level 4 is 4.327 meters above the lower tap of the RPV wide range water level instrumentation. (See Figure 5.1-3).

The ABWR has temperature compensated RPV level indication for post accident monitoring of the RPV water level. The ABWR temperature compensated water level instrumentation/logic compensates for the temperature within the RPV and the temperature of the water column in the instrument lines, both inside and outside the drywell. This essentially eliminates the drywell temperature effect on the RPV water level indication, except for the condition when flashing occurs in the RPV water level reference leg instrument lines. Section 18A.3 identifies the potential situations where flashing may occur in the RPV water level reference leg instrument lines. Section 18A also specifies that, for those conditions were RPV water level monitoring is uncertain, the RPV is to be flooded in accordance with the Emergency Procedure Guidelines (EPGs).

For the condition where flashing occurs in the section of the RPV water level reference leg instrument line inside the drywell, the maximum water level error which will occur will be about equal to the vertical drop of the RPV water level reference leg instrument line inside the drywell plus some small additional amount to account for instrumentation and logic inaccuracies. This results in a maximum error on the order of 0.9 meters for the ABWR. This is substantially less than the 4.33 m between the RPV wide range water level instrumentation lower tap and RPV Low Water Level 4. Therefore, even in the worst flashing case, the RPV wide range water level instrumentation should comply with GL 84-23.

The ABWR uses analog level transmitters (LTs) as requested in GL 84-23.

For the automatic safety systems initiated on RPV water level trips, the ABWR safety systems utilizes two-out-of-four logic, with input from each of the four RPV water level instrument lines. The loss of one instrument line can not result in the loss of an automatic safety function.

Question 430.300

Justify non-compliance of the current ABWR design with position 7 of TMI issue II.E.4.2. This design does not include the containment isolation on a high containment radiation signal for the containment purge and vent isolation valves as required by position 7. (19A.2.26, 19A.2.27)

Response 430.300

The ABWR design fully complies with NRC position 7 of TMI Issue II.E.4.2. The containment purge and vent valves are automatically isolated on high radiation levels in the reactor building HVAC air exhaust or in the fuel handling area air exhaust.

This response has been incorporated in revised Subsection 1A.2.14.

Question 430.301

Explain whether the reopening of isolation valves is performed on a valve-by valve basis (which is acceptable according to the guidance provided by TMI issue II.E.4.2) or as a ganged opening (which is not acceptable). (19A.2.26, 19A.2.27)

Response 430.301
Re-opening of any containment isolation valve is performed on a valve by valve basis once the isolation signal has cleared and following subsequent logic reset. This is in compliance with the guidance in NRC Position 4 on this issue.

Question 430.302
Discuss the administrative controls that will be in effect to assure that closed purge isolation valves cannot be inadvertently opened. (19A.2.26, 19A.2.27)

Response 430.302
The administrative controls that will be in effect to guard against inadvertent re-opening of the containment purge isolation valves are in accordance with the following sequential steps:

(1) The containment signal must be clear to remove the cause of the trip condition.

(2) The isolation logic must be manually reset to remove the sealed signal.

(3) Deliberate operator action is then required to manually re-open each containment isolation valve individually.

Question 430.303
Explain the technical basis for the 72 (versus 24) hour technical specification limit allowing the large diameter purge lines to be open above 15% power at the beginning and end of the fuel cycle. Since these valves can be open during power operation, verify that the large diameter 56 cm purge line isolation valves can successfully perform their intended function under accident conditions (containment design pressures). (19A.2.26, 19A.2.27)

Response 430.303
The ABWR Technical Specification (Subsection 16.9.3.2) window during which the large diameter purge lines are allowed to be open has been changed to 24 hours at the beginning and end of a fuel cycle. This is consistent with Subsection 6.2.5.2.2. The large diameter (55.9 cm) purge valves are required to be able to close under accident conditions. It is not necessary to open these valves following an accident since overpressure protection of the containment is provided by rupture disks.

Question 430.304
Evaluate the adequacy of two-inch at-power purge lines for relieving primary containment excessive pressure (resulting from a combination of compressed air system leaks, steam leaks, and elevated containment atmosphere temperatures associated with hot days or degraded containment HVAC performance) during normal operation in light of current reactor operating experience in which many plant operators are forced to periodically open the large containment purge lines at power to maintain normal containment pressure. Include an evaluation of the ability of the two-inch lines to maintain normal containment pressure, the possible need to operate the large (22") containment purge and vent isolation valves, and identify the size of a

small purge line required to preclude operation of the 22" containment purge lines during power operation. (19A.2.26, 19A.2.27)

Response 430.304

The 5 cm nitrogen bleed lines are expected to be fully adequate to maintain normal containment pressure during startup and power operation, as stated in Subsections 6.2.5.2.4 and 6.2.5.2.5. The ABWR drywell cooling system is much improved in capacity over previous BWR designs and has substantial excess capacity. The containment spray could also be used to remove excess heat (and thus reduce pressure) if necessary. Previous BWR5 and BWR6 plants also have used 5 cm bleed lines for containment pressure control.

Question 430.305

Also note a discrepancy between Figure 6.2-39a sheet 1 and Table 6.2-7 of Amendment 11. Valve T31-F007 is listed as a 2" valve in Table 6.2-7. However, Figure 6.2-39a has been modified and this valve now appears to be on the same line as the 14" rupture disk to be used for containment overpressure protection system. Other information provided for this valve in the figure and the table is also contradictory. Modify the figure and table to accurately represent both the 2" at-power purge lines and the containment overpressurization protection flow path. (19A.2.26, 19A.2.27)

Response 430.305

Table 6.2-7 was revised in Amendment 14 and valve T31-F007 was deleted from the table because it is not an isolation valve. This valve is not a 50A valve but is a 350A meters valve as is correctly shown on Figure 6.2-39a. The isolation signal to valve T31-F007 has been deleted from Figure 6.2-39a.

Question 430.306

Widely separated primary containment penetrations for the drywell and wetwell purge systems (supply side penetrations X-80 and X-240; and exhaust side penetrations X-81 and X-241, SSAR Figure 6.2-39a, (sheet 1) have common primary containment outboard isolation valves. Explain how the above configurations comply with GDC 56 which requires the outboard isolation valve to be as close to the containment (i.e., the drywell or wetwell in this case) as practical. (19A.2.26, 19A.2.27)

Response 430.306

The following paragraph has been added to Subsection 6.2.4.3.2.2.

6.2.4.3.2.2.3 ACS Lines to Containment

The Atmospheric Control System (ACS) has both influent and effluent lines which penetrate the containment. Both isolation valves on these lines are outside of the containment vessel to provide accessibility to the valves. The inboard valve is located as close as practical to the containment vessel. The piping to both valves is an extension of the containment boundary.

Question 430.307

Section 19B.2.6 of the ABWR SSAR reflects the EPRI Requirements Document positions on hydrogen generation, that is, containment concentrations resulting from an active fuel-clad oxidation of 75% and the concentration of less than 13%. These requirements are less conservative than the requirements of 10CFR50.34(f), namely 100% and 10%. Also, provide an analysis and supporting documentation demonstrating that the hydrogen control system will be able to maintain containment atmosphere within acceptable limits and that the hydrogen recombiners will function in an extremely hydrogen rich environment, using the hydrogen generation rates and allowable concentrations of 10CFR50.34(f). (19A.2.12, 19A.2.21, 19A.2.46, 19B.2.6)

Response 430.307

The response is contained in the ABWR Resolution in Subsection 19B.2.6 of Amendment 10.

Question 430.308

There is a discrepancy between ABWR SSAR Section 19A.2.12 which states that permanently installed recombiners are provided and Section 6.2.1.1.1 which states that portable recombiners will be available for use after a LOCA signal is generated (Section 6.2.5.2.7 also states that recombiners will be located on skids in the secondary containment). Clarify the type of recombiners to be included in the ABWR design. If portable recombiners are to be used and located outside primary containment, provide information detailing how containment integrity is to be maintained during system operation. Of specific concern is the possibility that leaks in the portions of the system outside containment could result in a flammable mixture and uncontrolled combustion. Additionally, EPRI ALWR requirements presented in Section 19B.2.6 require that the "Plant Designer shall define a suitable scheme" for removing residual hydrogen from the containment after an accident. This concern has not been addressed and it appears that there would not be sufficient oxygen in containment after an accident to recombine all the hydrogen. Thus, either an analysis demonstrating that recombiners are sufficient to remove the hydrogen present after a beyond design basis accident, or a method for ensuring that purging containment, using either the Containment Overpressure Protection System or purging through the Standby Gas Treatment System, will not result in a mixture that would be flammable upon contact with air, is required. (19A.2.12, 19A.2.21, 19A.2.46, 19B.2.6)

Response 430.308

The response has been incorporated in revised Subsection 6.2.1.1.1(9) and Figure 6.2.40. The EPRI ALWR requirements have been deleted from Subsection 19B.2.6 in Amendment 11. Note 1 on Figure 6.2-40 has been deleted.

Question 430.309

Section 6.2.5 of the ABWR SSAR asserts, but does not demonstrate, that mixing of drywell and suppression chamber atmospheres by natural circulation occurs and would be enhanced by containment sprays. There is no justification for the assertion that combustible mixtures will not

form locally. Provide the analysis justifying the assertion that combustible mixtures will not form locally. (19A.2.12, 19A.2.21, 19A.2.46, 19B.2.6)

Response 430.309

Atmospheric mixing in the containment is a complex function of diffusion and natural and induced convection. Largely because of the complex geometry of the containment, detailed and rigorous calculations of convection flow paths are impractical. However, a number of solutions of the diffusion equation for specific geometries and boundary conditions are available in the literature. Furthermore, by noting the similarities between the phenomena and equations governing mass and heat transfer, experimental heat transfer data and their correlations can be used to predict the effect of convection on mass transfer.

Since radiolysis is the only source of oxygen in the ABWR containment following a LOCA, this mass/heat transfer analogy can be used to make conservative predictions of the local concentration of oxygen in the wetwell. The result of this analysis shows a maximum concentration of 5.10% at the suppression pool surface for an average concentration of 5%. Using less conservative assumptions with respect to natural convection heat transfer coefficients would result in a maximum oxygen concentration of only 5.015% at the pool surface.

Concentration gradients in the drywell were not specifically calculated. However, the existence of strong convection-inducing forces such as the high temperature differential between the reactor vessel and the drywell atmosphere, flow out of the broken pipe, and the drywell sprays would result in the calculation of smaller concentration gradients than were calculated for the relatively quiescent wetwell. Given the conservatism of the Regulatory Guide 1.7 oxygen generation rates and the results of this analysis, the overall conclusion is that the assumption of uniform concentration in the containment is reasonable for performing calculations related to the flammability control system.

Additional information regarding this analysis can be found in Subsection 6.2.5.3 of the Updated FSAR for Duane Arnold Energy Center Unit 1.

Question 430.310

There is no consideration of the effects of accidents beyond design basis, as required by TMI issue (TMI-II.B.8). The ABWR SSAR states that there are no design basis events that result in core uncovery or core heatup sufficient to cause significant metal-water reaction, and therefore uses the Regulatory Guide 1.7 design basis metal-water reaction instead of addressing hydrogen generated by a 100% metal-water reaction. Provide an analysis of the capability of the hydrogen control system to mitigate the effects of beyond design basis hydrogen and oxygen generation rates. (19A.2.17, 19A.2.21, 19A.2.46, 19B.2.6)

Response 430.310

Accidents beyond design conditions are considered in Subsection 19E.2.3.2 of Amendment 8.

Question 430.311

The design evaluation of the inerting system uses NEDO-22155 rather than Regulatory Guide 1.7 oxygen generation rates. The NEDO-22155 generation rates are not acceptable for use in licensing submittals. (See the July 6, 1989 NRC SER for NEDO-22155.) Incorporate the appropriate oxygen generation rates in the hydrogen control system analysis. (19A.2.17, 19A.2.21, 19A.2.26, 19B.2.6)

Response 430.311

The oxygen generation rates from Regulatory Guide 1.7 are used as stated in Subsection 6.2.5.3, Amendment 11.

Question 430.312

The containment isolation valves for the Flammability Control System have been identified in Table 6.2-7 of the ABWR SSAR. However, no other information regarding these containment penetrations have been provided. The discussion of the recombiner system to be provided, as part of ABWR SSAR section 6.2.5, should include a description of the dedicated penetrations for this system. Include in your discussion details such as (1) how long after LOCA and at what concentration level of hydrogen, the recombiner has to be activated, (2) line sizes as related to flow requirements, (3) duration of recombiner operation, and (4) interface requirements for referencing applicants with regard to the recombiners (e.g., development of procedural provisions to assure availability of possible shared portable hydrogen recombiners between sites on a timely basis and coordination of surveillance programs in accordance with SRP Section 6.2.5 acceptance criterion II.12). Also, include the flammability control system in SSAR Table 3.2-1. (19A.2.17, 19A.2.21, 19A.2.46, 19B.2.6)

Response 430.312

A discussion of the recombiners is included in Amendment 11, Subsection 6.2.5.2.7. The flammability control system is included in Table 3.2-1 as item T7 in Amendment 12.

Question 430.313

Regarding additional accident monitoring instrumentation identified in NUREG-0737, TMI Action Item II.F.1, Attachments 1 through 6, discuss compliance with the positions stated in the following clarifications: (19A.2.29)

(1) Clarification (1), (2) and (4) for noble gas effluent monitor (NUREG Pages II.F.1-2, 3 and 6). Note that SSAR Sections 7.5 and 11.5 discuss only some positions identified in the clarifications.

(2) Clarifications (1) through (4) for sampling and analysis of plant effluents as they relate to ABWR scope (NUREG Pages II.F.1-7, 8 and 9); identify any applicable interface requirement for the referencing applicant.

(3) Clarifications (1), (3) and (5) for containment high range radiation monitor (NUREG Pages II.F.1-11 and 13).

(4) Clarification (5) for containment pressure monitor (NUREG Page II.F.14).

(5) Clarification (5) for the containment water level monitors (NUREG Page II.F.1-16). Include suppression pool water level in SSAR Subsection 7.5.2.1. The staff finds GE's justification for considering the drywell sump level monitors as Category 3 rather than as Category 1 as required by Regulatory Guide 1.97, Rev 3, unacceptable. Address the above concern.

(6) Clarification (3) for containment hydrogen monitor (NUREG Page II.F.1-18). Also, clarify whether the monitors have the capability to operate from –35 kg/cm^{2}g to design pressure as required by Regulatory Guide 1.97, Rev 3.

Response 430.313

(1) The ABWR design utilizes high-range radiation detectors for off-gas effluent monitoring from the stack and in the containment which cover the expanded range up to 3.7 GBq/cm^{3}on compliance with R.G. 1.97 R3. These monitors will be qualified to the environmental conditions applicable to the release path. More than one monitor is used to cover the entire anticipated radiation range to include accident conditions. Section 11.5 includes this capability.

(2) Capability is provided in the ABWR design for continuous sampling of plant gaseous effluent during post accident releases of radioactive iodines and particulates especially from the stack. The sampling guidelines as defined in ANSI N13.1-1969 are complied with for sampling and analysis. Heat tracing capability as required is provided to control moisture in all sampling lines.

(3) The high range gamma radiation monitors used for containment atmospheric monitoring fully complies with all the stipulated requirements. The CAMS provides 4 high-range gamma monitors, each with a range of 0.001 Gy/h to 0.1 MGy/h (2 each at penetrations in the drywell and in the suppression chamber). The monitors, which respond to gamma energies from 9.6E-03 pJ to 0.48 pJ, meet the ±20% energy response accuracy criteria from 0.016 to 0.48 pJ.

(4) The pressure monitors are required to have a design accuracy of 4.42 kPaG, and a time constant of 1.0 second. These requirements are judged to be adequate for their intended function.

(5) Response to this question will be provided in a future amendment.

(6) The ABWR CAMS design will utilize oxygen and hydrogen monitors that are capable of operation from 34.3 kPaG to design pressure in conformance with Regulatory Guide 1.97 Rev.3.

Question 435.63

Description and analysis demonstrating compliance of the offsite power system to regulatory requirements has not been addressed in the ABWR SSAR. Provide a description and analysis demonstrating compliance for the offsite power system within the ABWR standard plant scope from the utility/ABWR interface to the Class 1E distribution system input terminals. Also, provide interface requirements for the offsite power system outside the ABWR standard plant scope from the utility/ABWR interface out to the utility grid system. (19B.2.18, 19B.2.24)

Response 435.63

The SSAR text has undergone significant revisions since this question was originally asked. The requested information is contained in the SSAR as follows:

(1) Description of offsite power system: 8.1.2.1. And 8.2.1.2.

(2) Analysis of offsite power system 8.2.2,

(3) Offsite power system scope definition: 8.2.1.1.

(4) Offsite power system interface requirements: 8.2.3.

Question 435.64

Provide descriptive information and analysis for reference in the ABWR SSAR, where the descriptive design information or analysis can be found, which demonstrates the ABWR design is consistent with the ALWR resolution for generic issues described in Section 19B.2.18 and 19B.2.24. (19B.2.18, 19B.2.24)

Response 435.64

The ABWR resolution for Subsection 19B.2.18 is included as the last segment within that same subsection (see page 19B.4-48, Amendment 7). However, since the main transformer is not part of the ABWR Standard Plant scope (see Subsection 8.1.2.1), design details must be supplied by the COL applicant. Amendment 15 added the corresponding COL license information requirement in Subsection 19B.3.6.

Similarly, the ABWR resolution for Subsection 19B.2.24 is included as the last segment within that same subsection (see Page 19B.2-56, Amendment 7). Specific descriptions and/or drawings in Chapter 8, which support the ABWR resolutions statements, are identified as follows:

ABWR Resolution	Support Source(s)
(1)	8.1.2.1, 8.1.3.1.1.1, 8.3.1.1, 8.3.1.1.4.1, 8.3.1.2.1, 8.3.1.4, Figures 8.3-1 thru 8.3-7

(2)	8.3.1.1.8.1, Figures 8.3-1 thru 8.3-3
(3)*	Figure 8.3-7
(4)	8.1.2.1, 8.1.3.1.1.1, 8.3.1.1, Figure 8.3-1
(5), (6)	8.1.2.1, 8.3.1.1, 8.3.1.2.1, 8.3.1.4, Figures 8.3-1 thru 8.3-7

* Both Paragraph (3) and Figure 8.3-7 were revised as described in Responses 435.69 and 435.66, respectively.

Question 435.65

It is the staff position that transformers associated with the preferred offsite circuits be separated by the maximum extent practical (preferably on different sides of a building) in order to minimize the common-cause effects of fire, missiles, or environmental effects on their operation. Provide a description and interface requirements which demonstrates compliance with the staff position. (19B.2.18, 19B.2.24)

Response 435.65

The locations of the main transformer, the unit auxiliary transformers, and the reserve auxiliary transformer are shown on Figure 4.3-2. The main and unit auxiliary transformers are located outside the turbine building at the west end, which is opposite the end which adjoins the control building. The reserve auxiliary transformer is located on the north side, which provides separation for the secondary offsite power interface. The reserve auxiliary transformer has separate and independent bus feeds to all three divisional buses and most non-divisional buses (see Figure 8.3-1). Therefore, its separate location demonstrates compliance with the staff position.

In addition, the onsite power sources are located at areas quite remote from these transformers. The three diesel generators are located in three of the four corners of the reactor building, and the gas turbine generator is located inside the turbine building, in the room adjoining the “B” load and switchgear area (see Figure 4.3-3).

Question 435.66

It is the staff position that interconnectors between redundant divisions through safety or non-safety buses shall be maintained with two normally open and interlocked devices that are separate and independent such that single failure or operator error cannot cause the

interconnection of or challenge to redundant divisions. Provide a design description, interface requirements, and/or analysis which demonstrates compliance with this staff position. (19B.2.18, 19B.2.24)

Response 435.66

The ABWR Standard Plant design utilizes three independent AC divisions, each with its own separate pair of offsite power feed chains and standby diesel generator. The ABWR does not have interconnections between redundant divisions. However, the standby chargers for the DC power supply may be manually connected to either of the two divisions, but only when their loads are switched to the same division. Key interlocks mechanically insure that these standby chargers can only be used in one division at a time. There are additional circuit interrupts, which are normally open, on both the source and load sides of the standby chargers. Therefore, this interface is in compliance with the staff position. A Note has been added to Figure 8.3-7 clarifying the required use of the mechanical interlocks to maintain divisional separation.

Question 435.67

Non-safety computers and transient recorder loads shown on Figure 8.3-5 have provisions included in their power supply design for automatically transferring these loads from class 1E division 1 to 3. In addition, it appears that the power supply may also include provision for automatic transfer of these loads between division 1 and 2. The design does not appear to meet regulatory positions 4b and 4c of Regulatory Guide 1.6 and thus does not appear to meet the independence requirements of criterion 17 of Appendix A to 19CFR50, the intent of position 1 of Regulatory Guide 1.75, or the intent of generic issue 128. Explain how the design meets the staff requirements or provide design changes such that the ABWR electric system design will meet the independence requirement of criterion 17 or identify this design as being in non-compliance with criterion 17 and provide justification. (19B.2.18, 19B.2.24)

Response 435.67

The ABWR design was modified such that these loads are no longer connected to Class 1E power. (See Sheet 3 of Figure 8.3-4; also, see responses 435.34 and 435.40).

The DC Power System is in full compliance with the subject criteria, as stated in Subsection 8.3.2.2.2.

Question 435.68

Identify all safety and non-safety loads that can be powered from more than one Class 1E divisions AC or DC power supplies. (19B.2.18, 19B.2.24).

Response 435.68

The ABWR design has been modified such that there are no loads that can receive power from more than one Class 1E division, except a special emergency condition allowance via an administratively controlled manual switching arrangement of the standby battery chargers (see 8.3.2.1.3 and 8.3.4.18).

Question 435.69

ABWR resolution (3) of Section 19B.2.24 indicates that alternate AC power for battery chargers is supplied through a series of physically separated breakers from a different division. These interdivisional breakers are in series, mechanically interlocked, and kept normally open during plant operation. Provide justification that this design is more reliable than one where the alternate AC supply comes only from the division the DC system is associated with. In addition, provide physical layout drawings, analysis, and/or interface requirements which demonstrate that when the alternate AC is used the independence and single failure requirements of criterion 17 are still met. (19B.2.18, 19B.2.24)

Response 435.69

There are no alternate AC supplies for the DC battery chargers other than the one the DC system is associated with. Clarifications have been made to the ABWR Resolution (3) Subsection 19B.2.24.

Question 440.117

Position—The licensees should determine, on a plant-specific basis, by analysis or experiment, the consequences of a loss of cooling water to the reactor recirculation pump seal coolers. The pump seal should be designed to withstand a complete loss of alternating-current (AC) power for at least 2 hours. Adequacy of the seal design should be demonstrated. (19A.2.30)

Resolution—The intent of this item's position is to prevent excessive loss of reactor coolant inventory following an anticipated operational occurrence. Loss of AC power for this is construed to be loss of offsite power.

The staff requires the following additional information from GE to complete the review on this item:

Confirm that failure of the following systems will not generate a LOCA.

(1) Recirculation Motor Cooling System (RMC)

(2) Recirculation Motor Seal Purge System (RMSP)

(3) Recirculation Motor Inflatable Shaft Seal Subsystem (RMISS)

Response 440.117

The requested information has been added to Subsection 19A.2.30.

Question 630.1

In item 19A.2.47, NRC position, part (b) you state that you will include information on "the technical resources director by the applicant." This is either a typographical error or a misinterpretation of the NRC position. It is our position that the information should include "the technical resources directed by the applicant." Please clarify your statement or provide a basis for the change to the content of the information that we require. (19A.2.47)

Response 630.1

Clarification of director to directed has been added to Subsection 19A.2.47.

Question 910.26

(1) In Appendix 19B.2.4 of the Standard Safety Analysis Report, ABWR resolution of GSI A-29 relies upon separation of trains and usual access constraints and security provisions for protection against insider sabotage. Separation of trains has benefit against an external adversary, but it does not assure additional protection against an insider with authorized access to both trains. Card-readers on doors between trains could present a deterrent effect against insider sabotage, but locked interior doors also have the potential for interfering with rapid access under emergency conditions. Separation of trains also allows the possibility of plant management to group plant personnel into teams that each work on only one train (such as used to enhance quality of operations at the BWR-6 in Cofrentes, Spain. No information is presented on how security access controls would be used to deter insider sabotage at an ABWR, nor to assure that these controls would not interfere with safety. Furthermore, Appendix 19B.2.4 of the ABWR Standard Safety Analysis Report does not identify design features that decrease reliance on physical security programs for protection against an insider.

(2) Appendix 19B.2.4 does not contain a commitment regarding the ABWR resolution of GSI A-29. Of the 13 pages devoted to GSI A-29, about 12 pages present BWR requirements of the draft EPRI-ALWR Requirements Document, most of which are not relevant to GSI A-29. Although the staff has some as yet unresolved questions about the EPRI requirements, the section titled "ABWR Resolution" does not commit to meeting these draft requirements. It states the ABWR is "considered to comply with" and "is consistent with" the ALWR requirements. It also states that the ABWR complies "with 10 CFR 73 and therefore with the ALWR requirements," whereas compliance with existing 10 CFR Part 73 neither implies compliance with the somewhat different ALWR requirements nor commits to any improvements over existing designs that also comply with 10 CFR Part 73. Chapter 9, Section 5.2.2.1 of the ALWR Requirements Document is quoted on page 19B.2-11 as:

> ". . . a sabotage vulnerability analysis shall be conducted prior to finalizing design. Such analysis shall be in accordance with the criteria and assumptions in Section 5.1.3."

Further, Section 5.2.4.2 (on page 19B.2-12) states:

> "The design of the security system shall include an evaluation of its impact on plant operation, testing, and maintenance."

Neither of these ALWR required evaluations is contained in the ABWR Standard Safety Analysis Report.

In addition, ABWR Response 910.10 says that issues dealing with plant internal security communications are outside the scope of the ABWR Standard Plant design, although the ALWR Requirements Document cited in Appendix 19B.2.4(19) includes such a communication requirements.

(3) Response to a staff request for additional information are given on pages 20.3-200 through 20.3-202 of the ABWR Standard Safety Analysis Report. Several of these responses are inadequate or incorrect. For example, Response 910.7 incorrectly implies that Appendix 19B.2.4 includes a discussion of the insider and outsider sabotage actions that would be necessary to cause significant core damage or Part 100 release levels.

(4) The Commission's Severe Accident Policy Statement included the statement:

> "The Commission also recognizes the importance of such potential contributors to severe accident risk as human performance and sabotage. The issue of both insider and outsider sabotage threats will be carefully analyzed and, to the extent practicable, will be emphasized in the design and in the operating procedures developed for new plants."

To comply with this position and to resolve GSI A-29, the staff anticipated that a systematic analysis of sabotage vulnerabilities would be performed to identify combinations of components which, if tampered with, would lead to core damage. This would have allowed an examination of the results to see if design changes were feasible to ensure that the tampering would be detected before the entire set could be disabled, or to see if it was feasible to "harden" critical components to make them less susceptible to tampering. Such an analysis has not been presented. (19B.2.4)

Response 910.26

(1) A complete analysis of ABWR design features which reduce sabotage risk is presented in Appendix 19C, which was added to the SSAR in Amendment 15. A part of that amendment included the addition of a reference to Appendix 19C in the 19B.2.4 subsection titled "ABWR Resolution."

(2) As indicated in Response (1), the sabotage vulnerability analysis was provided in Appendix 19C (Amendment 15). The analysis provides the ALWR resolution of GSI A-29.

With regard to security systems, the response to Question 910.10 has been modified to clarify the interface requirements.

(3) The NRC did not indicate which of the ten responses were "inadequate or incorrect." However, the problems associated with Responses 910.7 and 910.10 have been resolved as indicated in Responses (1) and (2) respectively. Also, Subsection 13.6.3, which is referenced by many of the responses, has been extensively revised in Amendment 15. Therefore, GE assumes this question has been resolved.

(4) As indicated in Response (1), the sabotage vulnerability analysis was provided in Appendix 19C (Amendment 15). This analysis provides the ALWR resolution of GSI A-29.