10.0 Steam and Power Conversion System

10.1 Summary Description

The components of the Steam and Power Conversion (S&PC) System are designed to produce electrical power utilizing the steam generated by the reactor, condense the steam into water, and return the water to the reactor as heated feedwater, with a major portion of its gaseous, dissolved, and particulate impurities removed in order to satisfy the reactor water quality requirements.

The S&PC System includes the main steam system, the main turbine generator system, main condenser, condenser evacuation system, turbine gland seal system, turbine bypass system, extraction steam system, condensate cleanup system, and the condensate and feedwater pumping and heating system. The heat rejected to the main condenser is removed by a circulating water system and discharged to the power cycle heat sink.

Steam, generated in the reactor, is supplied to the high-pressure turbine and the second stage reheaters of the steam moisture separators/reheaters. Extraction steam from the high-pressure turbine is supplied to the first stage reheaters of the moisture separators/reheaters. Steam leaving the high-pressure turbine passes through a combined moisture separator/reheater prior to entering the low pressure turbines. The moisture separator drains, steam reheater drains, and the drains from the two high pressure feedwater heaters are pumped back to the reactor feedwater pump suction by the heater drain pumps. The low pressure feedwater heater drains are cascaded to the condenser.

Steam exhausted from the low-pressure turbines is condensed and deaerated in the condenser. The condensate pumps take suction from the condenser hotwell and deliver the condensate through the filters and demineralizers, gland steam condenser, steam jet air ejector condensers, and to the suction of the condensate booster pumps. The condensate booster pumps discharge condensate through the low-pressure feedwater heaters to the reactor feed pumps. The reactor feed pumps discharge through the high pressure feedwater heaters to the reactor.

Major S&PC System design features are summarized in Table 10.1-1. The system main features are illustrated on Figure 10.1-1.

Normally, the turbine power heat cycle utilizes all the steam being generated by the reactor; however, an automatic pressure-controlled turbine bypass system designed for 33% of the rated steam flow is provided to discharge excess steam directly to the condenser. Although the ABWR Standard Plant design is for 33% bypass, this capability could be increased to a full load reject capability without affecting the Nuclear Island.

Individual components of the S&PC System are based on proven conventional designs suitable for use in large, central station power plants.

All auxiliary equipment is sized for the maximum calculated unit capability with turbine valves wide open.

The S&PC System is designed for sustained long-term operation with a heat input equal to the rated 3919 MWt available from the NSSS when the reactor core is generating its rated 3926 MW thermal output. The S&PC System is designed to operate at 105% of maximum guaranteed turbine throttle flow (assumed to correspond to turbine valves wide open) for transients and short-term loading conditions.

The inlet pressure at the turbine main steam valves reflects reactor power, steam line flow and pressure regulator programming, but never exceeds the pressure for which the turbine components and steam lines are designed.

The necessary biological shielding for personnel protection is provided for all radiation producing components of the power conversion system, including the main turbines, moisture separator/reheaters, feedwater heaters, condenser and steam jet air ejector.

The reference guaranteed rating and valves-wide-open flow quantities and fluid energy levels are shown on the turbine cycle heat balances (Figures 10.1-2 and 10.1-3, respectively).

The majority of the S&PC System is located in the Turbine Building which is a non-seismic, non-safety-related building.

Non-safety-related instrumentation is provided to measure and control flow, pressure, differential pressure, temperature, and level throughout the steam and condensate system. The instrumentation provides input signals to the Plant Information and Control System which maintains the normal operation of the plant.

Safety-related instrumentation is provided to detect the fast closure of the turbine control valves, stop valve position, turbine first-stage pressure and main condenser pressure.

10.1.1 Protective Features

10.1.1.1 Loss of External Electrical Load and/or Turbine Trip

Load rejection capabilities of the Steam and Power Conversion System are discussed in Section 10.3.

10.1.1.2 Overpressure Protection

The following components are provided with overpressure protection in accordance with the ASME Boiler and Pressure Vessel Code, Section VIII:

(1) Moisture separator/reheater vessels

(2) Selected low pressure feedwater heaters

(3) High pressure feedwater heaters

(4) Heater drain tank

10.1.1.3 Turbine Overspeed Protection

Turbine overspeed protection is discussed in Subsection 10.2.2.4.

10.1.1.4 Turbine Integrity

Turbine integrity is discussed in Subsections 10.2.3 and 3.5.1.

Table 10.1-1 Summary of Important Design Features and Performance Characteristics of the Steam and Power Conversion System

Nuclear Steam Supply System, Full Power Operation	
Rated reactor core power, MWt	3,926
Rated NSSS power, MWt	3,919
Reactor steam outlet pressure, MPaA	7.17
Reactor nominal outlet steam moisture,%	0.1
Reactor inlet feedwater temperature, °C	215.6
Turbine-Generator	
Nominal Rating, MWe	~1,400
Turbine type	Tandem compound, six flow, 132.08 cm last-stage bucket
	1 high pressure turbine
	3 low pressure turbines
Operating speed, rad/s	188.5 (1800 rpm)
Turbine throttle steam pressure, MPaA	6.79
Throttle steam nominal moisture,%	0.4
Moisture Separator/Reheaters (MSRs)	
Number of MSRs per unit	2
Stages of moisture separation	1
Stages of reheat	2
Main Condenser (Site Dependent)	
Type	Single pressure
Design duty, kW	~25.15 x 10^5
Circulating water flow rate, m^3/h	~272,550
Circulating water temperature rise, °C	~7.99
Condensate Pumps	
Number of pumps	4 x 33% (3 operating and 1 standby)
Pump type	Vertical, centrifugal multi-stage
Driver type	Induction motor

Table 10.1-1 Summary of Important Design Features and Performance Characteristics of the Steam and Power Conversion System (Continued)

Design Conditions:	
Normal flow, m^3/h	~2300
Total head, m	~150
Rated motor power, kW	~1300
Condensate Booster Pumps	
Number of pumps	4 x 33% (3 operating and 1 standby)
Pump type	Horizontal, centrifugal multi-stage
Driver type	Induction motor
Design conditions:	
Normal flow, m^3/h	~2300
Total head, m	~280
Rated motor power, kW	~2300
Feedwater Heaters	
Low Pressure Heaters	
a. No. 1	
Number per stage	3
Stage pressure, kPaA	43.5
Duty per shell, kW	59.8×10^3
Drain Cooler Duty per shell, kW	13.5×10^3
b. No. 2	
Number per stage	3
Stage pressure, kPaA	90.0
Duty per shell, kW	38.4×10^3
c. No. 3	
Number per stage	3
Stage pressure, kPaA	249
Duty per shell, kW	62.8×10^3

Table 10.1-1 Summary of Important Design Features and Performance Characteristics of the Steam and Power Conversion System (Continued)

d. No. 4	
Number per stage	3
Stage pressure, kPaA	439
Duty per shell, kW	40.9×10^3
High Pressure Heaters	
e. No. 5	
Number per stage	2
Stage pressure, kPaA	1,244
Duty per shell, kW	125.3×10^3
f. No. 6	
Number per stage	2
Stage pressure, kPaA	2,250
Duty per shell, kW	136.5×10^3
Reactor Feedwater Pumps	
Number of pumps	3 normally operating (33%), 1 standby, variable speed
Pump type	Horizontal, centrifugal, single stage
Driver type	electric motors
Design conditions:	
Main pumps:	
Normal flow, m^3/h	~3300
Total head, m	~760
Rated motor power, kW	~8400
Heater Drain Pumps	
Number of pumps	4 x 33% (3 operating, 1 standby)
Pump type	Horizontal, centrifugal
Driver type	Induction motor
Design conditions:	
Normal flow, m^3/h	~1250
Total head, m	~370
Rated motor power, kW	~1600

Table 10.1-1 Summary of Important Design Features and Performance Characteristics of the Steam and Power Conversion System (Continued)

High Press. Heater Drain Tank	
Number of tanks	1
Design, pressure MPaG	1.67 & Full Vac.
Tank capacity, m^3	~98
Low Press. Heater Drain Tanks	
Number of tanks	3
Design, pressure MPaG	0.35 & Full Vac.
Tank capacity, m^3	~4

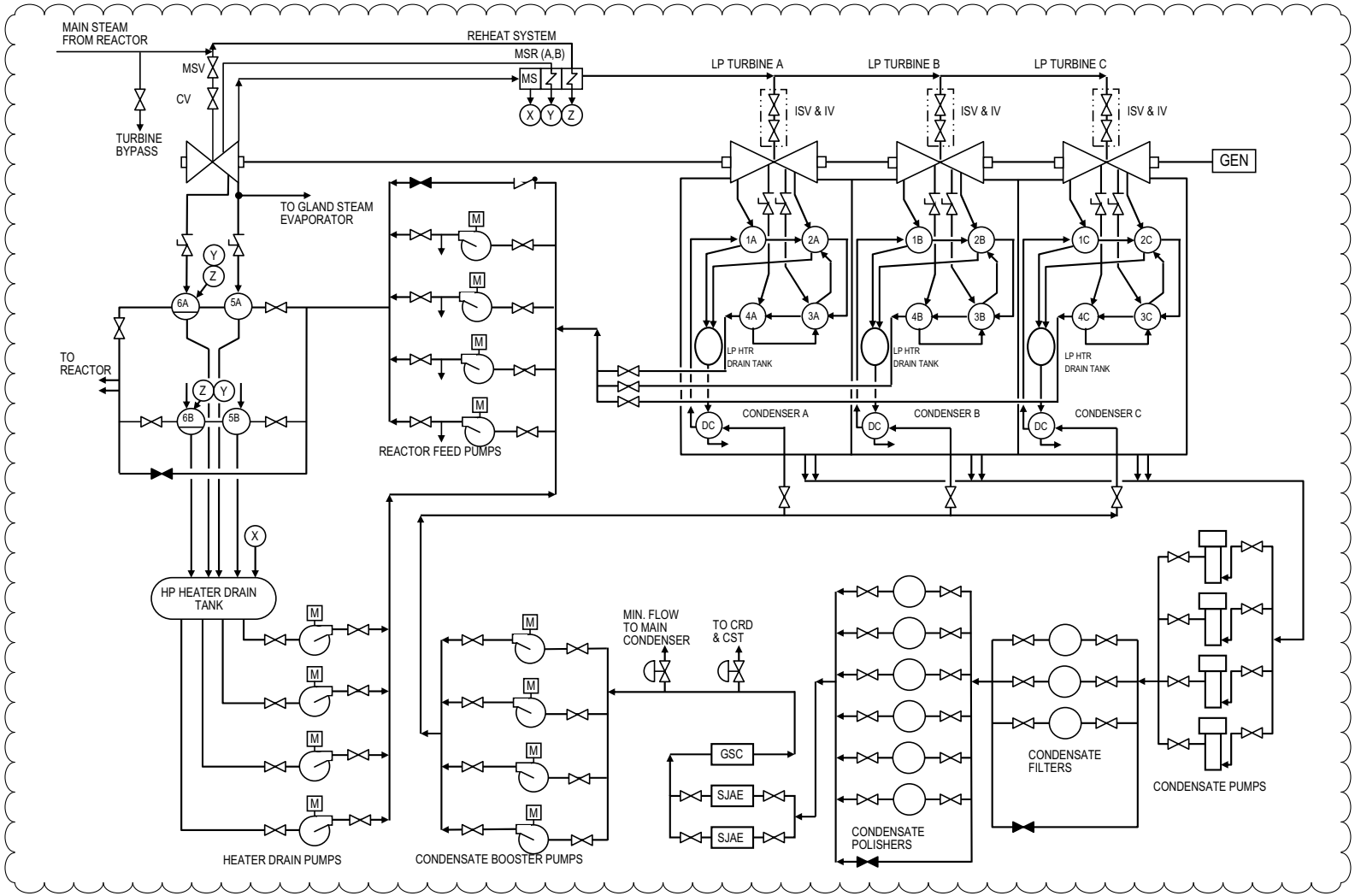

Figure 10.1-1 Reference Steam & Power Conversion System

The following figures are located in Chapter 21 :

Figure 10.1-2 Reference Heat Balance for Guaranteed Reactor Rating

Figure 10.1-3 Reference Heat Balance for Valves-Wide-Open (VWO)