5.4 Component and Subsystem Design

5.4.1 Reactor Recirculation System

5.4.1.1 Safety Design Bases

The Reactor Recirculation System (RRS) has been designed to meet the following safety design bases:

(1) An adequate fuel barrier thermal margin shall be assured during postulated transients.

(2) The system shall maintain pressure integrity during adverse combinations of loadings and forces occurring during abnormal, accident, and special event conditions.

5.4.1.2 Power Generation Design Bases

The RRS meets the following power generation design bases:

(1) The system shall provide sufficient flow to remove heat from the fuel.

(2) The system shall provide an automatic load following capability over the range of 70 to 100% rated power.

(3) System design shall minimize maintenance situations that would require core disassembly and fuel removal.

5.4.1.3 Description

The RRS features an arrangement of ten reactor coolant recirculation pump units commonly referred to as reactor internal pumps (RIPs). A cross section of a RIP is shown in Figure 5.4-1. Collectively, these provide forced circulation of the reactor coolant through the lower plenum of the reactor and up through the lower grid, the reactor core, steam separators, and back down the downcomer annulus (Figure 5.4-2). The recirculation flow rate is variable over a range—termed the flow control range—from minimum flow established by certain pump performance characteristics to above the maximum flow required to obtain rated reactor power as shown on Figure 5.4-3. Figure 5.4-3 shows typical RIP performance characteristics which have been used for steady state performance analysis. Regulation of reactor power output over an approximate power range (70% ≤ reactor power output ≤100% rated output), without need for moving control rods, is thus made possible by varying recirculation flow rate over the flow control range. The configuration of the RRS with 10 RIPs is shown on the RRS P&ID and Process Diagrams, (Figures 5.4-4 and 5.4-5, respectively). RRS design characteristics are presented in Table 5.4-1. Control of the reactor power through the flow control region is provided by the Recirculation Flow Control System (RFCS) as described in Section 7.7. The RFCS closely relates to the RRS in that it provides properly conditioned control and logic signals, which regulate the reactor coolant recirculation flow rate produced by the RRS under various steady-

state, transient, upset, and emergency modes of NSSS operation. The following three subsystems are designated as part of the RFCS (see Section 7.7 for details):

(1) Adjustable Speed Drive (ASD) Subsystem

(2) Recirculation Pump Trip (RPT) Subsystem

(3) Core Flow Measurement (CFM) Subsystem

In addition to the RIPs, several subsystems are included as part of the RRS to provide closely related, or closely supporting, functions to the RRS in composite or to the RIPs as individual components. These subsystems are as follows:

(1) Recirculation Motor Cooling (RMC) Subsystem

(2) Recirculation Motor Purge (RMP) Subsystem

(3) Recirculation Motor Inflatable Shaft Seal (RMISS) Subsystem

The RIPs, as well as each of these subsystems, are further described in later paragraphs.

The motor casing has a closure assembly, at its bottom-most end, termed a “motor cover”. The motor cover, in addition to its reactor pressure-boundary closure function, provides a foundation for the bearing assembly which holds the non-rotating bearing elements of the thrust bearings. The motor cover is sealed to the motor casing with a single, Flexitallic-type gasket and an O-ring. The recirc motor (RM) region surrounded by the inner surface of the motor casing and the inner surface of the motor cover, is termed the motor cavity.

The principal element of the stretch tube section is a thin-walled Inconel tube configured as a hollow bolt fitting around the pump shaft and within the pump nozzle. It has an external lip (bolt head) at its upper end and an external threaded section at its lower end. The stretch tube function is to achieve tight clamping of the internal pump diffuser to the gasketed, internal-mount end of the RPV pump nozzle, at the extremes of thermal transients and pump operating conditions. Clamping action is achieved by (1) capturing, with the stretch tube upper lip, a mating lip on the diffuser, and (2) a stretch tube nut threaded onto the stretch tube lower end where it projects into the upper region of the motor cavity. When the stretch tube is hydraulically pretensioned, the prescribed preload is exerted on the diffuser.

5.4.1.3.1 Recirculation Motor Cooling Subsystem

During RIP operation, heat is generated by the RM internals (windings and conductor electrical losses; viscous heating) and is also conducted from the vessel (RPV and primary coolant) to the motor cavity water and internals. Therefore, cooling is required for the RM.

These RM internals, including the water present in the motor cavity, are cooled by a circulating water process which cycles the water in the motor cavity out through the RMC Subsystem to a

recirculation motor heat exchanger (RMHX) and through return piping connections back to the RM. There is one RMHX per RIP located near the RM and within the reactor support pedestal. While the RIP is operating, flow circulation is powered principally by the RM auxiliary impeller shown in Figure 5.4-1. The RMHXs are positioned vertically such that should the RM stop during reactor operation, natural circulation through the RMC Subsystem piping will occur at flow rates sufficient to limit the RM temperature to acceptable values.

Heat pickup by the RMC Subsystem process coolant is rejected via the RMHX to the Reactor Building Cooling Water System as shown on Figure 5.4-4.

The RMHX is a vertically-oriented, shell-and-tube U-tube heat exchanger with a bottom water box, as shown schematically on Figure 5.4-4. Principal approximate sizing parameters feature a carbon steel or stainless steel shell outside diameter of approximately 400 mm and approximately 2700 mm length, 8.62 MPaG design pressure and 302°C design temperature. Tubes are stainless steel material designed for external pressure loading. Shell tube sheet and water box material is carbon steel or stainless steel. The RMHX stands taller than the RM motor casing, but the bottoms of each are located approximately at the same elevation. RMC Subsystem primary coolant from the RIP motor cavity flows outbound from a nozzle near the top of the motor casing, and through 65A stainless steel piping, which courses across and upward to the RMHX primary coolant inlet nozzle located near the top of the RMHX shell. This RMC flow proceeds downward, under the combined action of driving pressure head developed (when the RIP is running) by the RM auxiliary impeller and by buoyancy head developed by temperature (density) differences existing over the vertical closed-loop path lengths. In moving downward through the shell, this primary coolant sweeps back and fourth across the tube bundles guided by horizontal flow baffle/tube-support plates. Flow exits from the shell through a nozzle located just above the tube sheet and crosses, via 65A piping, directly back to the RIP motor casing on a piping run which is arranged primarily in a horizontal plane. Upon entering the RM casing, this primary coolant is drawn into the suction region of the RM auxiliary impeller, where it is then driven upward through the RM to begin another circuit around this RM-RMHX-RM flow loop.

5.4.1.3.2 Recirculation Motor Purge Subsystem

RIP maintenance radiation doses are minimized by preventing the buildup of reactor primary coolant impurities on RM components. Such prevention is provided by the recirculation motor purge (RMP) Subsystem, which supplies each RIP a flow of clean water to an RM shaft-stretch tube annular region located just above the RM upper journal bearing.

The Control Rod Drive (CRD) System is the source for pure water supply to the RMP Subsystem as shown on Figure 5.4-4. CRD water supply pressure is approximately 15.30 MPaG, and will range in temperature from just a few degrees above condensate storage tank temperature to a high temperature of about 60°C. At the connection from the RCS, the RMP Subsystem controls the 10 RIP purge flow to values shown for position 8 on Figure 5.4-5.

RMP flow then passes into a pipe header, outside the drywell wall, where the flow becomes distributed to an individual pipe to each RIP. Between the header and the containment pipe penetration, on each line a manual flow control valve is provided and an inline flow indicating switch. This permits the plant operator to regulate the RMP flow to each RIP within the range specified for position 7 on Figure 5.4-5.

The lower-bound flow rate value assures that a positive upward moving flow, around the pump shaft and into the reactor, will always be maintained. This action thus precludes contaminated reactor water from entering the motor cavity and, in turn, the RMC Subsystem piping and equipment. The upper-bound flow rate value is set to prevent conditions which might produce rapid temperature cycling (and thus produce high cycle fatigue) on the pump shaft.

In addition to the above bounds on RMP Subsystem flow rate into each RIP, upper and lower temperature bounds also apply. An upper temperature limit to the RMP water, at the inlet to the RIP, of 70°C has been established to preclude deterioration of the inflatable seal (resiliency), which could occur under prolonged high temperature operation. Since the maximum supply water temperature from the CRD System to the RMP subsystem interface is 60°C, and since fluid at this high temperature would experience only heat losses along the pipe run to the RIP, the RMP Subsystem design inherently assures that this upper temperature bound will not be exceeded.

Lower temperature bounds also apply, and the operative lower temperature limit depends on the reactor operating state. These lower temperature limits for RMP water at the entrance to the RIP are (1) 30°C whenever the reactor primary coolant water temperature is above 100°C; and (2) 10°C whenever the reactor primary coolant water temperature is 100°C or below. These limits are set to preclude excessive temperature cycling on the pump shaft in the region where the RMP water first encounters reactor primary coolant (i.e., the region from the top of the stretch tube to the joint with the impeller at the top of the pump shaft). The RMP water supply from the CRD system normally originates from the main demineralized condensate. The CRD system temperature ordinarily will be in the 40 to 60°C range at the point of delivery to the RMP Subsystem, as shown on Figure 5.4-5. Since the main run of RMP piping passes through the top of the lower drywell equipment airlock, across the drywell, and up to the RIPs, and since the flow rate is so low, heat pickup from drywell atmosphere will ensure that the temperature at the entrance to the RIPs will be above the required lower limit. Heaters for RMP Subsystem flow will not be required. This conclusion is consistent with European RIP experience, and is confirmed by detailed engineering analyses.

It is expected that a daily check by the plant operator, to confirm that flow rate to each RIP is within the required bounds, will be the only attention needed for this subsystem. Rarely will it be required for the operator to adjust the manual flow control valve.

Instrumentation is provided to monitor RMSP Subsystem performance and provide warning alarms for individual RIP high or low flow conditions.

5.4.1.3.3 Recirculation Motor Inflatable Shaft Seal Subsystem

An inflatable seal is designated as a secondary seal. A primary seal, preventing downflow of reactor water into the motor cavity, is provided by contact faces on the pump shaft and stretch tube. Ordinarily separated, this primary seal becomes functional when the RM and, in turn, the pump shaft is lowered during the RIP dismantling sequence.

The inflatable seal made from elastomeric material and housed inside the upper (neck) region of the motor cavity (below the stretch tube lower end) is provided. When activated, this seal functions to prevent downflow of reactor water from the RPV into the motor cavity. This allows the motor cavity to be drained and the RM to be removed from the motor casing for repair or maintenance work. The RMISS is the subsystem which enables manually activating the seal when the reactor is shutdown and the motor is stopped. The RMISS applies pressurizing water to the side of the seal closest to the motor casing inside surface. Such pressurization causes the seal member to inflate and press tightly against the pump shaft and motor casing, producing the sealing action. A pressure equalizing line is connected on the line which activates the seal and down to the motor casing drain takeoff point. This pressure equalizing line is open for normal operation of the RIP. The differential pressure that is produced by RIP auxiliary impeller action when the RIP is operating ensures that a small outward pressure assisting seal retraction will be present to assure that contact does not take place between the rotating pump shaft and the inflatable seal.

5.4.1.4 Operation

The RRS is required to operate during startup, normal operation, and hot standby. It is not required to operate during shutdown cooling. During various moderately frequent transient and certain infrequent transients, various RIP operating modes will be required, such as: (1) RIPs runback from loss of one reactor feed pump (2) trip of selected RIPs from current reactor protection conditions; or runback-to-30% speed and subsequent trip. These control actions are all produced through control actions of the RFCS, described in Subsection 7.7.1.3.

A description of system/component primary operational requirements is given below.

The RIPs are required to operate in the modes directed by the RFCS, without sustaining damage and without experiencing wear under normal operations—over the time period remaining until their normal scheduled removal from the reactor for refurbishment. The intended refurbishment interval is five years. An average of two of the ten RIPs is scheduled for removal for refurbishment, with these operations to be performed during the scheduled refueling outage.

The requirements on the RIPs apply equally to the RRS Subsystems. For the conditions when the RIPs are not required to operate, pressure integrity of the RCPB must be maintained.

The range of steady-state conditions over which RIP operation is required is indicated on the process diagram for the Reactor Recirculation System (Figure 5.4-5). Capabilities for the system with one RIP out of service are listed; this diagram states that the RRS shall provide

rated core flow with one RIP out of service. With seven or eight RIPs operating, plant operation is possible at reduced power.

The RMC Subsystem, including the RMHXs, is required to operate whenever the RIPs are operating. Additionally, this subsystem must function in the period following trip of any RIPs until such time as temperature of reactor primary coolant has been brought below the Mode D value listed on the RRS process diagram (Figure 5.4-5) representing the normal exit temperature of RMC Subsystem fluid leaving the motor cavity.

Moreover, the RMC Subsystem is required to function throughout all events in which electric power to the RIPs is lost. Loops A and B of the RCW, which are cooling water sources to the RMC Subsystem, are required to be immediately reconnected during this power event.

5.4.1.5 Safety Evaluation

RRS malfunctions that pose threats of damage to the fuel barrier are described and evaluated in Chapter 15, where it is shown that none of the malfunctions result in fuel damage. The recirculation system has sufficient flow coastdown characteristics to maintain fuel thermal margins during abnormal operational transients.

Piping and pump design pressures for the RRS are based on peak steam pressure in the reactor dome, appropriate pump head allowances, and the elevation head above the lowest point in the recirculation pump. Piping and related equipment pressure parts are chosen in accordance with applicable codes. Use of the listed code design criteria assures that a system designed, built, and operated within design limits has an extremely low probability of failure caused by any known failure mechanism. Purchase specifications require that integrity of the pump motor case be maintained through all normal and upset transients. The design of the motor bearings is required to be such that dynamic load capability at rated operating conditions is not exceeded during the design basis earthquake.

Pump overspeed will not occur during the course of a loss-of-coolant accident (LOCA) due to a anti-rotation device (ARD) which is located at the bottom of the RIP motor and prevents a backward rotation of the RIP. The ARD also prevents backward rotation during normal plant operation when one RIP is stopped and the other RIPs are operating. The ARD is designed to successfully withstand ≤ 7551 N·m reverse torque and prevent backward RIP rotation.

Each RIP is contained in a pressure boundary housing that is attached to the RPV by a weld to a RIP nozzle located in the RPV bottom head (Figure 5.4-1). Mitigation of a hypothetical failure of the weld is assured by the following:

(1) The weld is bridged by the stretch tube which is, in principle, a long hollow bolt. The normal function of the stretch tube is to hold the pump diffuser in place. In the event of weld failure, the stretch tube is the first member to resist ejection of the housing. The stresses in the stretch tube, resulting from a guillotine failure of the weld, would

be less than the minimum specified ultimate strength. Thus, the stretch tube may be reasonably considered to mitigate the event.

(2) In the event that the stretch tube also breaks, the RIP assembly will move downward a small amount until the impeller backseats. The backseat feature is used during RIP motor servicing to prevent leakage of reactor coolant when the motor cover is removed. In the event of weld and stretch tube failure, the backseating will result in the RIP shaft restraining the ejection load, with the load path being from the backseat through the shaft to the thrust bearing. The weak link in this path is the bearing to shaft bolt which is loaded to less than its ultimate strength by the ejection event and hence would not be expected to fail.

(3) If the weld fails, the stretch tube fails and the bearing to shaft bolt fails, and the shaft backseat fails, then the vertical restraints come in play. These restraints are stainless steel rods which connect lugs on the vessel to lugs on the motor cover. The restraints are designed specifically to preclude motor housing shootout and are designed to the same criteria used for pipe restraints.

A Failure Modes and Effects Analysis (FMEA) of the RIP is presented in Appendix 15B.

During normal RIP maintenance the following sequence is performed:

(1) The RIP motor, lower cover and impeller shaft are unbolted and lowered until the shaft backseats on the top of the stretch tube shown in Figure 5.4-1.

(2) The secondary inflatable seal is pressurized and the motor housing is drained.

(3) The motor and cover are removed from the motor housing.

(4) A maintenance cover is bolted to the bottom of the motor housing and the housing is pressurized with water until equilibrium with the RPV static head pressure is reached. The secondary seal is then depressurized.

(5) After it is confirmed that the bottom cover is properly installed, the impeller-shaft is lifted out of the RPV and a maintenance plug is installed on top of the stretch tube. During the shaft lifting or maintenance plug removal step, personnel will monitor visually for leakage down out of the housing. The requirement for the COL applicant administrative procedure is described in Subsection 5.4.15.4.

The refueling machine auxiliary hoist, used for handling the impeller-shaft, is equipped with a load cell interlock which interrupts the hoisting power if the load exceeds the setpoint. The setpoint is less than the sum of the impeller-shaft weight and the hydrostatic head on the impeller.

The maintenance RIP diffuser plug is designed with a break-away lifting lug so it can not be removed unless the RIP motor housing permanent or maintenance bottom cover is bolted in place and the housing pressure is in equilibrium with the RPV static pressure.

(6) With the maintenance RIP diffuser plug in place, the motor housing is again drained and the maintenance bottom cover is removed. With the impeller shaft removed, maintenance on the secondary seal and stretch tube inspection is performed.

(7) The bottom maintenance cover is again installed and the housing refilled and pressurized.

(8) The maintenance top plug is removed and reassembly of the impeller-shaft-motor is completed in reverse order of 1 - 6 above including housing draining and filling.

In summary, the auxiliary hoist load cell prevents lifting the impeller if a bottom cover is not installed. The break-away lifting lug on the maintenance plug prevents lifting the plug if the bottom cover is not installed. In addition, undervessel leakage monitoring is required during these operations. Therefore, the possibility of an inadvertent RPV drain down is extremely remote.

5.4.1.6 Inspection and Testing

Quality control methods are used during fabrication and assembly of the RRS to assure that design specifications are met (inspection and testing procedures are described in Chapter 3). The RRS is thoroughly cleaned and flushed before fuel is loaded initially.

During the pre-operational test program, the RRS is hydrostatically tested at 125% reactor vessel design pressure. Preoperational tests on the RRS also include checking operation of the pumps and flow control system, as discussed in Chapter 14.

During the startup test program, horizontal and vertical motion of the RIP motor casing is observed. RIP motor acoustic monitoring is provided.

Nuclear system responses to recirculation pump trips at rated temperatures and pressure are evaluated during the startup tests, and plant power response to recirculation flow control is determined.

5.4.2 Steam Generators (PWR)

Not applicable to this BWR.

5.4.3 Reactor Coolant Piping

Since the RIPs are located inside the RPV, there is no major external reactor coolant piping connected to the ABWR pressure vessel.

5.4.4 Main Steamline Flow Restrictors

5.4.4.1 Safety Design Bases

The main steamline flow restrictors were designed to:

(1) Limit the loss of coolant from the reactor vessel following a steamline rupture outside the containment to the extent that the reactor vessel water level remains high enough to provide cooling within the time required to close the main steamline isolation valves.

(2) Limit the maximum pressure differences expected across the reactor internal components following complete severance of a main steamline.

(3) Limit the amount of radiological release outside of the drywell prior to MSIV closure.

(4) Provide trip signals for MSIV closure.

5.4.4.2 Power Generation Design Basis

The main steamline flow restrictors were designed to provide signals for feedwater flow control and steam flow indication.

5.4.4.3 Description

A main steamline flow restrictor (Figure 5.4-6) is provided for each of the four main steamlines by giving the inside bore of each RPV steam outlet nozzle the shape of a flow restricting venturi.

The restrictor limits the coolant blowdown rate from the reactor vessel in the event that a main steamline break occurs outside the containment to a (choke) flow rate equal to or less than 200% of rated steam flow at 7.07 MPaG upstream pressure. The flow restrictor is designed and fabricated in accordance with ASME Code, Fluid Meters.

The flow restrictor has no moving parts. Its mechanical structure can withstand the velocities and forces associated with a main steamline break. The maximum differential pressure between inside and outside of the vessel is conservatively assumed to be 9.48 MPaG, the reactor vessel ASME Code limit pressure.

The venturi throat diameter is not greater than 355 mm. The ratio of venturi throat diameter to steamline inside diameter of approximately 0.5 results in a maximum pressure differential (unrecovered pressure) of about 0.069 MPaG at 100% of rated flow. This design limits the steam flow in a severed line to less than 200% rated flow, yet it results in negligible increase in steam moisture content during normal operation. The restrictor is also used to measure steam flow to initiate closure of the MSIVs when the steam flow exceeds preselected operational

limits. The vessel dome pressure and the venturi throat pressure are used as the high and low pressure sensing locations.

5.4.4.4 Safety Evaluation

In the event a main steamline should break outside the containment, the critical flow phenomenon would restrict the steam flow rate in the venturi throat to 200% of the rated value. Prior to isolation valve closure, the total coolant losses from the vessel are not sufficient to cause core uncovering, and the core is thus adequately cooled at all times.

Analysis of the steamline rupture accident (Subsection 15.6.4) shows that the core remains covered with water and that the amount of radioactive materials released to the environs through the main steamline break does not exceed the guideline values of published regulations.

The steam flow restrictor is exposed to steam of about 1/10% moisture flowing at velocities of 45 m/s (steam piping ID) to 180 m/s (steam restrictor throat). The flow restrictor is Type 308 weld overlay clad. This is similar to the Type 304 cast stainless steel used in previous flow restrictors. It has excellent resistance to erosion/corrosion in a high velocity steam atmosphere. The excellent performance of stainless steel in high velocity steam appears to be due to its resistance to corrosion. A protective surface film forms on the stainless steel which prevents any surface attack, and this film is not removed by the steam.

Hardness has no significant effect on erosion/corrosion. For example, hardened carbon steel or alloy steel will erode rapidly in applications where soft stainless steel is unaffected.

Surface finish has a minor effect on erosion/corrosion. If very rough surfaces are exposed, the protruding ridges or points will erode more rapidly than a smooth surface. Experience shows that a machined or a ground surface is sufficiently smooth and that no detrimental erosion will occur.

5.4.4.5 Inspection and Testing

Because the flow restrictor forms a permanent part of the RPV steam outlet nozzle and has no moving components, no testing program beyond the RPV inservice inspection is planned. Very slow erosion, which occurs with time, has been accounted for in the ASME Section III design analysis. Stainless steel resistance to erosion has been substantiated by turbine inspections at the Dresden Unit 1 facility. These inspections have revealed no noticeable effects from erosion on the stainless steel nozzle partitions. The Dresden inlet velocities are about 100 m/s and the exit velocities are 200 to 300 m/s. However, calculations show that, even if the erosion rates are as high as 0.1 mm per year, after 60 years of operation, the increase in restrictor-choked flow rate would be no more than 7.5%. A 7.5% increase in the radiological dose calculated for the postulated main steamline break accident is insignificant.

5.4.5 Main Steamline Isolation System

5.4.5.1 Safety Design Bases

The main steamline isolation valves, individually or collectively, shall:

(1) Close the main steamlines within the time established by DBA analysis to limit the release of reactor coolant.

(2) Close the main steamlines slowly enough that simultaneous closure of all steamlines will not induce transients that exceed the nuclear system design limits.

(3) Close the main steamline when required despite single failure in either valve or in the associated controls to provide a high level of reliability for the safety function.

(4) Use pneumatic (N_2 or air) pressure and/or spring force as the motive force to close the redundant isolation valves in the individual steamlines.

(5) Use local stored energy (pneumatic pressure and/or springs) to close at least one isolation valve in each steam pipeline without relying on the continuity of any variety of electrical power to furnish the motive force to achieve closure.

(6) Be able to close the steamlines, either during or after seismic loadings, to assure isolation if the nuclear system is breached.

(7) Have the capability for testing during normal operating conditions to demonstrate that the valves will function.

5.4.5.2 Description

Two isolation valves are welded in a horizontal run of each of the four main steam pipes; one valve is as close as possible to the inside of the drywell, and the other is just outside the containment.

Figure 5.4-7 shows a main steamline isolation valve (MSIV). Each MSIV is a Y-pattern, globe valve. Rated steam flow through each valve is 1.912 x 10^6 kg/h. The main disc or poppet is attached to the lower end of the stem. Normal steam flow tends to close the valve, and higher inlet pressure tends to hold the valve closed. The bottom end of the valve stem closes a small pressure balancing hole in the poppet. When the hole is open, it acts as a pilot valve to relieve differential pressure forces on the poppet. Valve stem travel is sufficient to give flow areas past the wide open poppet greater than the seat port area. The poppet travels approximately 90% of the valve stem travel to close the main steam port area; approximately the last 10% of the valve stem travel closes the pilot valve. The air cylinder actuator can open the poppet with a maximum differential pressure of1.38 MPaG across the isolation valve in a direction that tends to hold the valve closed.

A Y-pattern valve permits the inlet and outlet passages to be streamlined; this minimizes pressure drop during normal steam flow and helps prevent debris blockage.

The valve stem penetrates the valve bonnet through a stuffing box that has two sets of replaceable packing. A lantern ring and leakoff drain are located between the two sets of packing.

Attached to the upper end of the stem is an air cylinder that opens and closes the valve and a hydraulic dashpot that controls its speed. The speed is adjusted by a valve in the hydraulic return line bypassing the dashpot piston.

Valve quick-closing speed is 3-4.5 seconds when N_2 or air is admitted to the upper piston compartment. The valve can be test closed with a 45-60 second slow closing speed by admitting N_2 or air to both the upper and lower piston compartments.

The pneumatic cylinder is supported on the valve bonnet by actuator support and spring guide shafts. Helical springs around the spring guide shafts close the valve if gas pressure is not available. The motion of the spring seat member actuates switches in the near-open/near-closed valve positions.

The valve is operated by pneumatic pressure and by the action of compressed springs. The control unit is attached to the gas cylinder. This unit contains three types of control valves that open and close the main valve and exercise it at slow speed. Remote manual switches in the control room enable the operator to operate the valves.

Operating gas is supplied to the valves from the plant N_2 or instrument air system. A pneumatic accumulator between the control valve and a check valve provides backup operating gas.

Each valve is designed to accommodate saturated steam at plant operating conditions with a moisture content of approximately 0.3% an oxygen content of 30 ppm, and a hydrogen content of 4 ppm. The valves are furnished in conformance with a design pressure and temperature rating in excess of plant operating conditions to accommodate plant overpressure conditions.

In the worst case, if the main steamline should rupture downstream of the valve, steam flow would quickly increase to 200% of rated flow. Further increase is prevented by the venturi flow restrictor.

During approximately the first 75% of closing, the valve has little effect on flow reduction, because the flow is choked by the venturi restrictor. After the valve is approximately 75% closed, flow is reduced as a function of the valve area versus travel characteristic.

The design objective for the valve is a minimum of 60 years service at the specified operating conditions. Operating cycles are estimated to be 1500 in 60 years and 3750 exercise cycles in 60 years.

In addition to minimum wall thickness required by applicable codes, a corrosion allowance is added to provide for 60 years service.

Design specification ambient conditions for normal plant operation are 57°C normal temperature and 60% humidity in a radiation field of 2.02 Gy/h neutron plus gamma, continuous for design life. The inside valves are not continuously exposed to maximum conditions, particularly during reactor shutdown, and valves outside the primary containment and shielding are in ambient conditions that are considerably less severe.

The MSIVs are designed to close under accident environmental conditions of 171°C for one hour at drywell design pressure. In addition, they are designed to remain closed under the following post-accident environment conditions:

(1) 171°C for an additional 2 hours at drywell pressure of 0.31 MPaG

(2) 160°C for an additional 3 hours at drywell design pressure of 0.31 MPaG

(3) 121°C for an additional 18 hours at 0.18 MPaG maximum

(4) 93°C for an additional 99 days at 0.14 MPaG

To sufficiently resist the response motion from the safe shutdown earthquake (SSE), the MSIV installations are designed as Seismic Category I equipment. The valve assembly is manufactured to withstand the SSE forces applied at the mass center of the valve with the valve located in a horizontal run of pipe. The stresses caused by horizontal and vertical seismic forces are assumed to act simultaneously. The stresses caused by seismic loads are combined with the stresses caused by other live and dead loads including the operating loads. The allowable stress or this combination of loads is based on a percentage of the allowable yield stress for the material. The parts of the MSIVs that constitute a process fluid pressure boundary are designed, fabricated, inspected, and tested as required by ASME Code Section III.

5.4.5.3 Safety Evaluation

In a direct cycle nuclear power plant, the reactor steam goes to the turbine and to other equipment outside the containment. Radioactive materials in the steam are released to the environs through process openings in the steam system or escape from accidental openings. A large break in the steam system can drain the water from the reactor vessel faster than it is replaced by feedwater.

The analysis of a complete, sudden steamline break outside the containment is described in Subsection 15.6.4. The analysis shows that the fuel barrier is protected against loss of cooling if MSIV closure is within specified limits, including instrumentation delay to initiate valve closure after the break. The calculated radiological effects of the radioactive material assumed to be released with the steam are shown to be well within the guideline values for such an accident.

The shortest closing time (approximately 3 seconds) of the MSIVs is also shown to be satisfactory. The switches on the valves initiate reactor scram when specific conditions (extent of valve closure, number of pipe lines included, and reactor power level) are exceeded (Subsection 7.2.1). The pressure rise in the system from stored and decay heat may cause the nuclear SRVs to open briefly, but the rise in fuel cladding temperature will be insignificant. No fuel damage results.

The ability of this Y-pattern globe valve to close in a few seconds after a steamline break, under conditions of high pressure differentials and fluid flows with fluid mixtures ranging from mostly steam to mostly water, has been demonstrated in a series of dynamic tests. A full-size, 500A valve was tested in a range of steam/water blowdown conditions simulating postulated accident conditions (Reference 5.4-1).

The following specified hydrostatic, leakage, and stroking tests, as a minimum, are performed by the valve manufacturer in shop tests:

(1) To verify its capability to close at settings between 3 and 4.5 s (response time for full closure is set prior to plant operation at 3.0 s minimum, 4.5 s maximum), each valve is tested at rated pressure (6.97 MPaG) and no flow.

(2) Leakage is measured with the valve seated. The specified maximum seat leakage, using cold water at design pressure, is 0.079 cm^3/h/mm of nominal valve size. In addition, an air seat leakage test is conducted using 0.28 MPaG pressure upstream. Maximum permissible leakage is 0.029 cm^3/h/mm of nominal valve size.

(3) Each valve is hydrostatically tested in accordance with the requirements of the applicable edition and addenda of the ASME Code. During valve fabrication, extensive nondestructive tests and examinations are conducted. Tests include radiographic, liquid penetrant, or magnetic-particle examinations of casting, forgings, welds, hardfacings, and bolts.

After the valves are installed in the nuclear system, each valve is tested as discussed in Chapter 14.

Two isolation valves provide redundancy in each steamline, so either can perform the isolation function and either can be tested for leakage after the other is closed. The inside valve, the outside valve, and the respective control systems are separated physically.

The isolation valve is analyzed and tested for earthquake loading. The loading caused by the specified earthquake loading is required to be within allowable stress limits and with no malfunctions that would prevent the valve from closing as required.

Electrical equipment that is associated with the isolation valves and operated in an accident environment is limited to the wiring, solenoid valves, and position switches on the isolation

valves. The expected pressure and temperature transients following an accident are discussed in Chapter 15.

5.4.5.4 Inspection and Testing

The MSIVs can be functionally tested for operability during plant operation and refueling outages. The test provisions are listed below. During refueling outage, the MSIVs can be functionally tested, leak-tested, and visually inspected.

The MSIVs can be tested and exercised individually to the 90% open position and full closed position in the fast closing mode. The valves can also be test closed within 45 to 60 s in the slow closing mode.

Leakage from the valve stem packing is collected and measured by the drywell drain system.

The leak through the pipeline valve seats can be measured accurately during shutdown by the following suggested procedure:

(1) With the reactor at approximately 52°C and normal water level and decay heat being removed by the RHR System in the shutdown cooling mode, all MSIVs are closed, utilizing both spring force and air pressure on the operating cylinder.

(2) Nitrogen is introduced into the reactor vessel above normal water level and into the connecting main steamlines and pressure is raised to 0.14 to 0.21 MPaG. An alternate means of pressurizing the upstream side of the inside isolation valve is to utilize a steamline plug capable of accepting the 0.14 to 0.21 MPaG pressure acting in a direction opposite the hydrostatic pressure of the fully flooded reactor vessel.

(3) A pressure gauge and flow meter are connected to the test tap between each set of MSIVs. Pressure is held below 6.86 kPaG, and flow out of the space between each set of valves is measured to establish the leak rate of the inside isolation valve.

(4) To leak check the outer isolation valve, the reactor and connecting steamlines are flooded to a water level that gives a hydrostatic head at the inlet to the inner isolation valves slightly higher than the pneumatic test pressure to be applied between the valves. This assures essentially zero leakage through the inner valves. If necessary to achieve the desired water pressure at the inlet to the inner isolation valves, gas from a suitable pneumatic supply is introduced into the reactor vessel top head. Nitrogen pressure (0.14 to 0.21 MPaG) is then applied to the space between the isolation valves. The stem packing is checked for leak tightness. Once any detectable stem packing leakage to the drain system has been accounted for, the seat leakage test is conducted by shutting off the pressurizing gas and observing any pressure decay. The volume between the closed valves is accurately known. Corrections for temperature variation during the test period are made, if necessary, to obtain the required accuracy. Pressure and temperature are recorded over a long enough period to obtain

meaningful data. An alternate means of leak testing the outer isolation valve is to utilize the previously noted steamline plug and to determine leakage by pressure decay or by inflow of the test medium to maintain the specific test pressure.

During pre-startup tests following an extensive shutdown, the valves will receive the same hydro tests that are imposed on the primary system.

Such a test and leakage measurement program ensures that the valves are operating correctly.

See Subsection 15.4.15.1 for COL license information.

5.4.6 Reactor Core Isolation Cooling System

Evaluations of the Reactor Core Isolation Cooling (RCIC) System against the General design Criteria (GDC) 5, 29, 33, 34 and 54 are provided in Subsection 3.1.2. Evaluations against the ECCS GDC 2, 17, 27, 35, 36 and 37 are provided below.

Compliance with GDC 2—The RCIC System is housed within the reactor building, which provides protection against wind, floods, missiles and other natural phenomena. Also, the RCIC System and its components are designed to withstand earthquake and remain functional following a seismic event.

Compliance with GDC 17—The RCIC System is a part of the ECCS network. It is powered from a Class 1E source independent of the HPCF power sources. Although RCIC is a single loop system, it is redundant to the two HPCF loops which comprise the high pressure ECCS (1-RCIC and 2-HPCF). Since independent Class 1E power supplies are provided, redundancy and single failure criteria are met; thus, GDC 17 is satisfied.

Compliance with GDC 27—As discussed in Subsection 3.1.2.3.8.2, the design of the reactivity under postulated accident conditions with appropriate margin for stuck rods. The capability to cool the core is maintained under all postulated accident conditions by the RHR System. Thus, GDC 27 is satisfied without RCIC System.

Compliance with GDC 35—The RCIC System, in conjunction with HPCF, RHR and Auto Depressurization Systems, performs adequate core cooling to prevent excessive fuel clad temperature during LOCA event. Detailed discussion of the RCIC System meeting this GDC is described in Subsection 3.1.2.

Compliance with GDC 36—The RCIC System is designed such that inservice inspection of the system and its components is carried out in accordance with the intent of ASME Section XI. The RCIC design specification requires layout and arrangement of the containment penetrations, process piping, valves, and other critical equipment outside the reactor vessel, to the maximum practical extent, permit access by personnel and/or appropriate equipment for testing and inspection of system integrity.

Compliance with GDC 37—The RCIC System is designed such that the system and its components can be periodically tested to verify operability. System operability is demonstrated by preoperational and periodic testings in accordance with RG 1.68. Preoperational tests will ensure proper functioning of controls, instrumentation, pumps and valves. Periodic testings confirm systems availability and operability throughout the life of the plant. During normal plant operation, a full flow pump test is being performed periodically to assure systems design flow and head requirements are attained. All RCIC System components are capable of individual functional testings during plant operation. This includes sensors, instrumentation, control logics, pump, valves, and more. Should the need for RCIC operation occur while the system is being tested, the RCIC System and its components will automatically be re-aligned to provide cooling water into the reactor. The above test requirements satisfy GDC 37.

5.4.6.1 Design Basis

The Reactor Core Isolation Cooling (RCIC) System is a safety system consisting of a turbine, pump, piping, valves, accessories, and instrumentation designed to assure that sufficient reactor water inventory is maintained in the reactor vessel to permit adequate core cooling to take place. This prevents reactor fuel overheating during the following conditions:

(1) A loss-of-coolant (LOCA) event.

(2) Vessel isolated and maintained at hot standby.

(3) Vessel isolated and accompanied by loss of coolant flow from the reactor feedwater system.

(4) Complete plant shutdown with loss of normal feedwater before the reactor is depressurized to a level where the shutdown cooling system can be placed in operation.

(5) Loss of AC power (Station Blackout (SBO)).

The RCIC System is designed to perform its vessel water inventory control function without AC power for at least 2 hours. Supporting systems such as DC power and the RCIC water supply are designed to support the RCIC System during this time period. Without AC power, RCIC room cooling will not be available. However, room temperature during the 2 hour period will not reach the maximum temperature for which the RCIC equipment has been qualified.

Inspections and analyses of the as-built RCIC System and supporting auxiliaries will be performed to confirm compliance with the 2 hour SBO design commitment. These activities will include an inspection of design documentation associated with the RCIC System, the Division I Class IE DC power supply system and the RCIC water supply equipment to confirm that the 2 hour SBO capability is part of the design basis requirements for this equipment and has been incorporated in the installed systems. In addition, an evaluation will be performed of the regions of the Reactor Building housing the RCIC equipment to confirm that environmental

conditions during a 2 hour SBO event (for which HVAC systems will not be available) will not exceed the envelope of conditions used to qualify the RCIC equipment. These evaluations will be documented in an RCIC Two Hour Station Blackout Evaluation. Auxiliaries have the capability to operate for a period of 8 hours. Analyses to demonstrate this non-design basis capability utilize realistic, best-estimate assumptions and analysis methods. See Subsection 5.4.15.2 for COL license information requirements.

During loss of AC power, the RCIC System, when started at water Level 2, is capable of preventing water level from dropping below the level which ADS mitigates (Level 1). This accounts for decay heat boiloff and primary system leakages.

Following a reactor scram, steam generation will continue at a reduced rate due to the core fission product decay heat. At this time, the turbine bypass system will divert the steam to the main condenser, and the feedwater system will supply the makeup water required to maintain reactor vessel inventory.

In the event that the reactor vessel is isolated and the feedwater supply unavailable, relief valves are provided to automatically (or remote manually) maintain vessel pressure within desirable limits. The water level in the reactor vessel will drop due to continued steam generation by decay heat. Upon reaching a predetermined low level, the RCIC System will be initiated automatically. The turbine-driven pump will supply demineralized makeup water from (1) the condensate storage tank (CST) to the reactor vessel and (2) the suppression pool. Seismically installed level instrumentation is provided for automatic transfer of the water source with manual override from CST to suppression pool on receipt of either a low CST water level or high suppression pool level signals (CST water is primary source). The turbine will be driven with a portion of the decay heat steam from the reactor vessel and will exhaust to the suppression pool. Suppression pool water is not usually demineralized and hence should only be used in the event all sources of demineralized water have been exhausted.

During RCIC operation, the suppression pool shall act as the heat sink for steam generated by reactor decay heat. This will result in a rise in pool water temperature. RHR heat exchangers are used to maintain pool water temperature within acceptable limits by cooling the pool water.

5.4.6.1.1 Residual Heat and Isolation

5.4.6.1.1.1 Residual Heat

The RCIC System shall initiate and discharge, within 30 seconds, a specified constant flow into the reactor vessel over a specified pressure range. The RCIC water discharge into the reactor vessel varies between a temperature of 10°C up to and including a temperature of 77°C. The mixture of the cool RCIC water and the hot steam does the following:

(1) Quenches steam.

(2) Removes reactor residual heat.

(3) Replenishes reactor vessel inventory.

Redundantly, the HPCF System performs a similar function, hence providing single failure protection. Both systems use different reliable electrical power sources which permit operation with either onsite or offsite power. Additionally, the RHR System performs a residual heat removal function.

5.4.6.1.1.2 Isolation

Isolation valve arrangements include the following:

(1) Two RCIC lines penetrate the reactor coolant pressure boundary (RCPB). The first is the RCIC steamline, which branches off one of the main steamlines between the reactor vessel and the MSIVs. This line has two automatic motor-operated isolation valves, one located inside and the other outside the drywell. An automatic motor-operated inboard RCIC isolation bypass valve is used. The isolation signals noted earlier close these valves.

(2) The RCIC pump discharge line is the other line that penetrates the RCPB, which directs flow into a feedwater line just outboard of the primary containment. This line has a testable check valve and an automatic motor-operated valve located outside primary containment.

(3) The RCIC turbine exhaust line also penetrates the containment. Containment penetration is located about a meter above the suppression pool maximum water level. A vacuum breaking line with two vacuum breakers in series runs in the suppression pool air space and connects to the RCIC turbine exhaust line inside the containment. Located outside the containment in the turbine exhaust line is a remote-manually controlled motor-operated isolation valve.

(4) The RCIC pump suction line, minimum flow pump discharge line, and turbine exhaust line penetrate the containment and are submerged in the suppression pool. The isolation valves for these lines are outside the containment and require automatic isolation operation, except for the turbine exhaust line which has remote manual operation.

The RCIC System design includes interfaces with redundant leak detection devices, monitoring:

(1) A high pressure drop across a flow device in the steam supply line equivalent to 300% of the steady-state steam flow at 8.22 MPaA pressure.

(2) A high area temperature utilizing temperature switches as described in the leak detection system (high area temperature shall be alarmed in the control room).

(3) A low reactor pressure of 0.34 MPaG minimum.

(4) A high pressure in the RCIC turbine exhaust line.

These devices, activated by the redundant power supplies, automatically isolate the steam supply to the RCIC turbine and trip the turbine. The HPCF System provides redundancy for the RCIC System should it become isolated.

5.4.6.1.2 Reliability, Operability, and Manual Operation

5.4.6.1.2.1 Reliability and Operability

The RCIC System (Table 3.2-1) is designed commensurate with the safety importance of the system and its equipment. Each component is individually tested to confirm compliance with system requirements. The system as a whole is tested during both the startup and pre-operational phases of the plant to set a base mark for system reliability. To confirm that the system maintains this mark, functional and operability testing is performed at predetermined intervals throughout the life of the plant.

A design flow functional test of the RCIC System may be performed during normal plant operation by drawing suction from the suppression pool and discharging through a full flow test return line to the suppression pool. All components of the RCIC System are capable of individual functional testing during normal plant operation. System control provides automatic return from test to operating mode if system initiation is required, and the flow is automatically directed to the vessel (Subsection 5.4.6.2.4).

See Subsection 5.4.15.2 for COL license information.

5.4.6.1.2.2 Manual Operation

In addition to the automatic operational features, provisions are included for manual startup, operation, and shutdown of the RCIC System in the event initiation or shutdown signals do not exist or the control room is inaccessible.

5.4.6.1.3 Loss of Offsite Power

The RCIC System power is derived from a reliable source that is maintained by either onsite or offsite power.

5.4.6.1.4 Physical Damage

The system is designed to the requirements presented in Table 3.2-1 commensurate with the safety importance of the system and its equipment. The RCIC System is physically located in a different quadrant of the reactor building and utilizes different divisional power and separate electrical routings than its redundant system (Subsections 5.4.6.1.1.1 and 5.4.6.2.4).

5.4.6.1.5 Environment

The RCIC System operates for the time intervals and the environmental conditions specified in Section 3.11.

5.4.6.2 System Design

5.4.6.2.1 General

5.4.6.2.1.1 Description

The summary description of the RCIC System is presented in Subsection 5.4.6.1, which defines the general system functions and components. The detailed description of the system, its components, and operation is presented in the following subsections.

5.4.6.2.1.2 Diagrams

The following diagrams are included for the RCIC System:

(1) Figure 5.4-8 is a schematic diagram showing components, piping, points where interface system and subsystems tie together, and instrumentation and controls associated with subsystem and component actuation.

(2) Figure 5.4-9 is a schematic showing temperature, pressure and flows for RCIC operation and system process data hydraulic requirements.

5.4.6.2.1.3 Interlocks

The following defines the various electrical interlocks:

(1) Valve F039 is key-locked open with an individual keylock.

(2) The F001 limit switch activates when not fully closed and closes F008 and F009.

(3) The F039 limit switch activates when fully open and clears the permissive for F037 to open.

(4) The F037 and turbine trip and throttle valve limit switches activate when not fully closed to initiate the turbine governor valve signal ramp generator and to clear permissives for F004 to open.

(5) The F037 limit switch activates when fully closed and permits F040 and F041 to open and closes F004 and F011.

(6) The turbine trip throttle valve limit switch activates when fully closed and closes F004 and F011.

(7) High reactor water level (Level 8) closes F037 and, subsequently, F004 and F011. This level signal is sealed in and must be manually reset. It will automatically clear if a low reactor water level (Level 2) reoccurs.

(8) High turbine exhaust pressure, low pump suction pressure, 110% turbine electrical overspeed, or an isolation signal actuates the turbine trip logic and closes the turbine trip and throttle valve. When the signal is cleared, the trip and throttle valve must be reset from the control room.

(9) Overspeed of 125% trips the mechanical trip, which is reset at the turbine.

(10) An isolation signal closes F035, F036, F048, and other valves as noted in Items (6) and (8).

(11) An initiation signal opens F001, F004, and F037 when other permissives are satisfied, starts the gland seal system, and closes F008 and F009.

(12) High- and low-inlet RCIC steamline drain pot levels respectively open and close F058.

(13) The combined signal of low flow plus pump discharge pressure opens and, with increased flow, closes F011. Also see Items (5), (6) and (7).

5.4.6.2.2 Equipment and Component Description

5.4.6.2.2.1 Design Conditions

Operating parameters for the components of the RCIC System are shown in Figure 5.4-9. The RCIC components are:

(1) One 100% capacity turbine, pump set and accessories

(2) Not Used

(3) Piping, valves, and instrumentation for:

(a) Steam supply to the turbine

(b) Turbine exhaust to the suppression pool

(c) Makeup supply from the condensate storage tank to the pump suction

(d) Makeup supply from the suppression pool to the pump suction

(e) Pump discharge to the feedwater line, a full flow test return line, and a minimum flow bypass line to the suppression pool

The basis for the design conditions is ASME B&PV Code Section III, Nuclear Power Plant Components.

Analysis of the net positive suction head (NPSH) available to the RCIC pump in accordance with the recommendations of Regulatory Guide 1.1 is provided in Table 5.4-1a.

5.4.6.2.2.2 Design Parameters

Design parameters for the RCIC System components are given in Table 5.4-2. See Figure 5.4-8 for cross-reference of component numbers.

5.4.6.2.3 Applicable Codes and Classifications

The RCIC System components within the drywell, including the outer isolation valve, are designed in accordance with ASME Code Section III, Class 1, Nuclear Power Plant Components. The RCIC System is also designed to Seismic Category I.

The RCIC System component classifications and those for the condensate storage system are given in Table 3.2-1.

5.4.6.2.4 System Reliability Considerations

To assure that the RCIC System will operate when necessary and in time to prevent inadequate core cooling, the power supply for the system is taken from reliable immediately available energy sources. Added assurance is given by the capability for periodic testing during station operation.

Evaluation of reliability of the instrumentation for the RCIC System shows that no failure of a single initiating sensor either prevents or falsely starts the system.

In order to assure HPCF or RCIC availability for the operational events noted previously, certain design considerations are utilized in design of both systems.

(1) Physical Independence

The two systems are located in separate areas of the reactor building. Piping runs are separated and the water delivered from each system enters the reactor vessel via different nozzles.

(2) Prime Mover Diversity and Independence

Independence is achieved by using a steam turbine to drive the RCIC pump and an electric motor-driven pump for the HPCF System. The HPCF motor is supplied from either normal AC power or a separate diesel generator.

(3) Control Independence

Independence is secured by using different battery systems to provide control power to each unit. Separate detection/initiation logics are also used for each system.

(4) Environmental Independence

Both systems are designed to meet Safety Class 1 requirements. Environment in the equipment rooms is maintained by separate auxiliary systems.

(5) Periodic Testing

A design flow functional test of the RCIC System can be performed during plant operation by taking suction from the suppression pool and discharging through the full flow test return line back to the suppression pool. The discharge valve to the feedwater line remains closed during the test and reactor operation is undisturbed. All components of the RCIC System are capable of individual functional testing during normal plant operation. Control system design provides automatic return from test to operating mode if system initiation is required, and the flow is automatically directed to the vessel.

(6) General

Periodic inspections and maintenance of the turbine-pump unit are conducted in accordance with manufacturers instructions. Valve position indication and instrumentation alarms are displayed in the control room.

5.4.6.2.5 System Operation

Manual actions required for the various modes of RCIC are defined in the following subsections.

5.4.6.2.5.1 Standby Mode

During normal plant operation, the RCIC System is in a standby condition with the motor-operated valves in their normally open or normally closed positions as shown in the piping and instrumentation diagram (P&ID) included in Figure 5.4-8. In this mode, the RCIC pump discharge line is kept filled. The relief valve in the pump suction line protects against overpressure from backleakage through the pump discharge isolation valve and check valve.

5.4.6.2.5.2 Emergency Mode (Transient Events and LOCA Events)

Startup of the RCIC System occurs automatically either upon receipt of a reactor vessel low water level signal (Level 2) or a high drywell pressure signal. During startup, the turbine control system limits the turbine-pump speed to its maximum normal operating value, controls transient acceleration, and positions the turbine governor valve as required to maintain constant pump discharge flow over the pressure range of the system. The RCIC system utilizes a flow control system that is an integral part of the pump and turbine.

The operator has the capability to select manual control of the governor, and change speed and flow (within hardware limitations) to match decay heat steam generation during the period of RCIC operation.

The RCIC pump delivers the makeup water to the reactor vessel through the feedwater line, which distributes it to obtain mixing with the hot water or steam within the reactor vessel.

The RCIC turbine will trip automatically upon receipt of any signal indicating turbine overspeed, low pump suction pressure, high turbine exhaust pressure, or an auto-isolation signal. Automatic isolation occurs upon receipt of any signal indicating:

(1) A high pressure drop across a flow device in the steam supply line equivalent to 300% of the steady-state steam flow at 8.22 MPaA.

(2) A high area temperature.

(3) A low reactor pressure of 0.34 MPaG minimum.

(4) A high pressure in the turbine exhaust line.

The steam supply valve F037 will close upon receipt of signal indicating high water level (Level 8) in the reactor vessel. These valves will reopen (auto-restart) should an indication of low water level (Level 2) in the reactor vessel occur. Water Level 2 automatically resets the water level trip signal. The RCIC System can also be started, operated, and shut down remote-manually provided initiation or shutdown signals do not exist.

5.4.6.2.5.3 Test Mode

A design functional test of the RCIC System may be performed during normal plant operation by drawing suction from the suppression pool and discharging through a full flow test return line back to the suppression pool. The discharge valve to the vessel remains closed during test mode operation. The system will automatically return from test to operating mode if system initiation is required and the flow will be automatically directed to the vessel.

5.4.6.2.5.4 Limiting Single Failure

The most limiting single failure with the RCIC System and its HPCF system backup is the failure of HPCF. With an HPCF failure, if the capacity of the RCIC System is adequate to maintain reactor water level, the operator shall follow Subsection 5.4.6.2.5.2. However, if the RCIC capacity is inadequate, Subsection 5.4.6.2.5.2 still applies. Additionally, the operator may initiate the ADS described in Subsection 6.3.2.2.2.

5.4.6.3 Performance Evaluation

The analytical methods and assumptions in evaluating the RCIC System are presented in Chapter 15 and Appendix 15A. The RCIC System provides the flows required from the analysis

(Figure 5.4-9) within a 30 second interval based upon considerations noted in Subsection 5.4.6.2.4.

5.4.6.4 Preoperational Testing

The preoperational and initial startup test program for the RCIC System is presented in Chapter 14.

5.4.7 Residual Heat Removal System

Evaluations of the Residual Heat Removal (RHR) System against the applicable General Design Criteria (GDC) are provided in Subsections 3.1.2 and 5.4.7.1.4.

5.4.7.1 Design Basis

The RHR System is composed of three electrical and mechanical independent divisions designated A, B, and C. Each division contains the necessary piping, pumps, valves and heat exchangers. In the low pressure flooder mode, suction is taken from the suppression pool and injected into the vessel outside the core shroud (via the feedwater line on Division A and via the low pressure flooder subsystem discharge return line on Divisions B and C).

The RHR System provides two independent containment spray cooling systems (on loops B and C), each having a common header in the wetwell and a common spray header in the drywell and sufficient capacity for containment depressurization.

Shutdown cooling suction is taken directly from the reactor via three shutdown cooling suction nozzles on the vessel. Shutdown cooling return flow is via the feedwater line on loop A and via low pressure flooder subsystem discharge return lines on loops B and C.

Connections are provided to the upper pools on three loops to return shutdown cooling flow to the upper pools during normal refueling activities if necessary. These connections also allow the RHR System to provide additional fuel pool cooling capacity as required by the Fuel Pool Cooling System during the initial stages of the refueling outage.

The RHR System provides an AC-independent water addition subsystem which consists of piping and manual valves connecting the fire protection system to the RHR pump discharge line on loop C downstream of the pump's discharge check valve. This flow path allows for injection of water into the reactor vessel and the drywell spray during severe accident conditions in which all AC power and all ECCS pumps are unavailable. Additionally, an external hookup outside the reactor building for connection of a fire truck pump to an alternate water source is provided.

As shown in Table 5.4-4, the RHR heat exchanger primary (tube) side design pressure is 3.43 MPaG and the secondary (shell) side design pressure is 1.37 MPaG. This pressure distribution is acceptable for the following reasons:

(1) Heat exchanger primary side leakage is accommodated by the surge tank of the pump loop of the reactor building cooling water system. The inlet to the secondary side of the heat exchanger is always open to this continuously running pump loop.

(2) The shell is an extension of the reactor building cooling water system's region. The reactor building cooling water system has a design pressure of 1.37 MPaG.

(3) The ABWR RHR heat exchanger has taken advantage of a design change that was made with respect to prior BWRs. ABWR has the reactor water flowing through the tube side of the heat exchanger, whereas, prior BWRs had the reactor water flowing through the shell side. The primary purpose for the change was to reduce radiation buildup in the heat exchanger by providing a more open geometry flow path through the center of the tubes, as apposed to the shell side construction of spacers, baffles, and low flow velocity locations, which can provide places for radioactive slug to accumulate. Also, the ABWR does not have a steam condensing mode, which needed reactor water or steam on the shell side. Tubes can accommodate a higher design pressure much more easily and effectively than the shell's large cylindrical structure; therefore, the shell can take advantage of the reactor building cooling water system's lower design pressure.

5.4.7.1.1 Functional Design Basis

The RHR System provides the following four principal functions:

(1) Core cooling water supply to the reactor to compensate for water loss beyond the normal control range from any cause up to and including the design basis (LOCA).

(2) Suppression pool cooling to remove heat released to the suppression pool (wetwell), as necessary, following heat inputs to the pool.

(3) Wetwell and drywell sprays to remove heat and condense steam in both the drywell and wetwell air volumes following a LOCA. In addition, the drywell sprays are intended to provide removal of fission products released during a LOCA.

(4) Shutdown cooling to remove decay and sensible heat from the reactor. This includes the safety-related requirements that the reactor must be brought to a cold shutdown condition using safety grade equipment as well as the non-safety functions associated with refueling and servicing operations.

Also, other secondary functions are provided, such as periodic testing, fuel pool cooling, pool draining and AC-independent water addition.

The RHR System has ten different operational configurations that are discussed separately to provide clarity.

5.4.7.1.1.1 Low Pressure Flooder (LPFL) Mode

Each loop in the Low Pressure Flooder Subsystem provides core cooling water supply to compensate for water loss beyond the normal control range from any cause up to and including the design basis (LOCA). This subsystem is initiated automatically by a low water level in the reactor vessel or high pressure in the drywell. Each loop in the system can also be placed in operation by means of a manual initiation pushbutton switch.

During the LPFL mode, water is pumped from the suppression pool initially and diverted through the minimum flow lines until the injection valve in the discharge line is signalled to open on low reactor pressure. As the injection valve opens on low reactor pressure, flow to the RPV comes from the suppression pool, through the RHR heat exchanger, and the injection valve. This creates a flow signal that closes the minimum flow line. The RHR System shall be capable of delivering flow into the reactor vessel within 36 seconds after receipt of the low pressure permissive signal following system initiation. This assumes a one-second delay for the instrumentation to detect the low pressure permissive and generate an initiation signal to the injection valve. Consequently, the 36-second RHR requirement is consistent with the 37-second injection time assumed in LOCA analyses. Additionally, the time for the pumps to reach rated speed, from the receipt of at least one actuation signal, is 29 seconds.

The system remains in this mode until manually stopped by the operator.

5.4.7.1.1.2 Test Mode

Full flow functional tests of the RHR System can be performed during normal plant operation or during plant shutdown by manual operation of the RHR System from the control room. For plant testing during normal plant operation, the pump is started and the return line to the suppression pool is opened. A reverse sequence is used to terminate this test. Upon receipt of an automatic initiation signal while in the flow testing mode, the RHR System is returned to automatic control.

5.4.7.1.1.3 Minimum Flow Mode

If the main discharge flow reaches a predetermined low value, the minimum flow valve in that loop will automatically open to provide some pump flow. During this mode, water is pumped from the suppression pool and returned to the suppression pool via the low flow bypass line. Sufficient main discharge flow will cause the minimum flow valve to close automatically.

5.4.7.1.1.4 Standby Mode

During normal plant operation, the RHR loops are in a standby condition with the motor-operated valves in the normally open or normally closed position. The valves on the suppression pool suction line are open and the minimum flow valves are open; the test valves

and injection valves are closed. The RHR pumps are not running, while the water leg pumps (line fill pumps) are running to keep the pump discharge lines filled. The relief valves in the pump suction and pump discharge lines protect the lines against overpressure.

5.4.7.1.1.5 Suppression Pool Cooling

The Suppression Pool Cooling Subsystem provides means to remove heat released into the suppression pool, as necessary, following heat additions to the pool. During this mode of operation, water is pumped from the suppression pool through the RHR heat exchangers, and back to the suppression pool. Suppression pool (S/P) cooling mode is automatically initiated for the three loops from a S/P high temperature signal and no RHR initiation signal (LOCA signal) being present. The Reactor Building Cooling Water (RCW) System automatically provides support for automatic S/P cooling. Once S/P cooling has been started automatically, it is terminated manually. The S/P cooling mode is also terminated by the initiation (LOCA) signal so that the injection LPFL mode is not inhibited. Manually starting the individual S/P cooling loops is possible when the injection valve of that loop is closed. Manually stopping the individual S/P cooling loops is possible without restriction. The automatic suppression pool cooling feature is not taken into account in the safety analysis.

5.4.7.1.1.6 Wetwell and Drywell Spray Cooling

Two of the RHR loops provide containment spray cooling subsystems. Each subsystem provides both wetwell and drywell spray cooling. This subsystem provides steam condensation and primary containment atmospheric cooling following a small break LOCA by pumping water from the suppression pool, through the heat exchangers and into the wetwell and drywell spray spargers in the primary containment. The preferred method of containment spray is with both wetwell and drywell spray used simultaneously started by manual initiation. If wetwell spray is desired by itself, without drywell spray, it can be initiated by operator action, but must be used in conjunction with the suppression pool (S/P) cooling mode. To accomplish this, a full flow mode must be initiated first, then its flow is throttled back to approximately one half flow. The wetwell spray valve would then be opened, followed by re-establishing rated flow for wetwell spray operation by opening the applicable full flow mode throttle valve as required. This mode of operation is only recommended for performance of periodic surveillance required by the Technical Specifications, which would likely utilize S/P cooling for the full flow mode. The wetwell spray mode is terminated automatically by a LOCA signal. If desired, the drywell spray mode can be initiated by operator action of opening the drywell spray valves post-LOCA in the pressure of high drywell pressure. The drywell mode is terminated automatically as the RPV injection valve starts to open, which results from a LOCA and reactor depressurization. Both wetwell and drywell spray modes can also be terminated by operator action. The wetwell spray lines have a flow meter with indication in the control room.

5.4.7.1.1.7 Shutdown Cooling

The Shutdown Cooling Subsystem is manually activated by the operator following insertion of the control rods and normal blowdown to the main condenser. In this mode, the RHR System removes residual heat (decay and sensible) from the reactor vessel water at a rate sufficient to

cool it to 60°C within 24 hours after the control rods are inserted. The conditions are achieved for normal operation where all three RHR loops are functioning together. The subsystem can maintain or reduce this temperature further so that the reactor can be refueled and serviced.

For emergency operation where one of the RHR loops has failed, the RHR System is capable of bringing the reactor to the cold shutdown condition of 100°C within 36 hours following reactor shutdown.

Reactor water is cooled by pumping it directly from the reactor shutdown cooling nozzles, through the RHR heat exchangers, and back to the vessel (via feedwater on one loop and via the low pressure flooder subsystem on the other two loops).

This subsystem is initiated and shut down by operator action.

The Branch Technical Position RSB 5-1, Section B.1.(b) and (c), of the RHR Standard Review Plan, SRP 5.4.7, requires the RHR suction side isolation valves to have independent diverse interlocks to prevent the valves from being opened unless the Reactor Coolant System (RCS) pressure is below the RHR System design pressure. While the ABWR RHR design does not explicitly meet this requirement for diversity, it does meet the intent of the requirement to provide high reliability against inadvertent opening of the valves. The pressure signal that provides the interlock function is supplied from 2-out-of-4 logic, which has four independent pressure sensor and transmitter inputs. The independence is provided by each being in a separate instrument division. Furthermore, the inboard and outboard valves of a common shutdown cooling suction line are operated by different electrical divisions.

5.4.7.1.1.8 Fuel Pool Cooling

All three RHR loops can provide supplemental fuel pool cooling during normal refueling activities and any time the fuel pool heat load exceeds the cooling capacity of the fuel pool heat exchangers. For normal refueling activities where the reactor well is flooded and the fuel pool gates are open, water is drawn from the reactor shutdown suction lines, pumped through the RHR heat exchangers and discharged through the reactor well distribution spargers. For 100% core removal, if necessary, water is drawn from the Fuel Pool Cooling (FPC) System skimmer surge tanks, pumped through the RHR heat exchangers and returned to the fuel via the FPC System cooling lines. These operations are initiated and shut down by operator action.

5.4.7.1.1.9 Reactor Well and Equipment Pool Drain

The RHR System provides routing and connections for emptying the reactor well and dryer/separator pit equipment pool to the suppression pool. Water is pumped or drained by gravity through the FPC System return lines to the RHR shutdown suction lines and then to the radwaste or the suppression pool.

5.4.7.1.1.10 AC-Independent Water Addition (ACIWA) Mode

The AC-independent water addition mode (Alternating Current independent) of the RHR System provides a means for introducing water from the Fire Protection System (FPS) directly

into the reactor pressure vessel, or to the drywell spray header, or to the wetwell spray header under degraded plant conditions when AC power is not available from either onsite or offsite sources. The RHR System provides the piping and valves which connect the FPS piping with the RHR loop C pump discharge piping. The manual valves in this line permit adding water from the FPS to the RHR System if the RHR System is not operable. The primary means for supplying water through this connection is by use of the diesel-driven pump in the FPS. A backup to this pump is provided by a connection on the outside of the reactor building at grade level, which allows hookup of the ACIWA to a fire truck pump.

Figure 5.4-10 shows the connections from either the diesel-driven pumps or the fire truck to the RHR system. The connections to the diesel-driven pump are in the RHR valve room. Opening valves F101 and F102 allows water to flow from the FPS into the RHR piping. Periodic stroke testing of these valves is required by Table 3.9-8 to ensure valve operability. The fire truck connection is located outside the reactor building at grade level. Both connections to the RHR system are protected by a check valve (F100 and F104 for the diesel-driven pump and the fire truck, respectively) to insure that RCS pressurization does not result in a breach of the injection path. Detailed procedures for the operation of the ACIWA, including operation of the FPS valve in the yard, are required to be developed by the COL applicant. See Section 19.9.7.

It is likely that elevated radiation levels may exist in the areas where the valves to align the ACIWA System for vessel injection or drywell spray are located. Preliminary calculations indicate that dose rates could range from 2 to 10R/h in these areas depending on specific piping arrangements, shielding, and SGTS operation. The COL applicant is required to perform dose rate calculations in the ACIWA operating procedures. See Section 19.9.7. If contaminated water were circulated through specific ECCS lines following core damage, the areas where the ACIWA System valves are located would not be accessible. However, it is anticipated that ACIWA System operation will not be required following core damage and subsequent ECCS operation. Under these postulated conditions, operation of the ECCS will obviate the need for ACIWA operation.

5.4.7.1.1.10.1 Vessel Injection mode of ACIWA

The primary injection path for the ACIWA mode is into the vessel via the LPFL header. For injection to occur, the RPV must be at low pressure. The purpose of vessel injection is to prevent core damage or, if core damage has already occurred, to terminate melt progression. Melt progression can potentially be terminated in-vessel if the debris has not failed the bottom of the vessel. After vessel failure, initiation of the vessel injection mode of the ACIWA mode will cover the debris in the lower drywell with water.

If the vessel injection mode of the ACIWA mode is not initiated in time to prevent core damage, its use can mitigate the consequences of core damage by enhancing cooling, preventing radiative heating from the debris and adding thermal mass to the containment. If injection is initiated prior to vessel failure, melt progression can be arrested in-vessel. However, if vessel failure occurs, debris will relocate from the vessel. If vessel failure occurs at low pressure (less

than approximately 1.37 MPaG), the debris will relocate only into the lower drywell. After vessel failure, water injected into the vessel will flow out of the vessel breach into lower drywell. Water flowing into the lower drywell will cover the core debris and enhance debris cooling.

Injection by the ACIWA mode is terminated during a severe accident when the water level in the containment reaches the bottom of the vessel. Higher water levels could lead to a situation in which the piping of the Containment Overpressure Protection System (COPS) could be jeopardized. COPS activation is expected in core damage scenarios in which containment heat removal is lost and not recovered. If the suppression pool water level is near the COPS elevation when rupture disk opens, water could potentially enter the COPS piping and impart significant water hammer loads. These loads are precluded by terminating water addition when the containment water level reaches the bottom of the RPV which is a few meters below the rupture disk. Another reason for terminating injection by the ACIWA mode is the reduction in free space available in the wetwell for non-condensables as the suppression pool level rises. Reducing the non-condensable volume increases containment pressure. Terminating injection at the bottom of the RPV approximately balances the pressure reduction due to heat absorption by the sprays and pressure increase due to non-condensable compression in the wetwell.

If vessel failure occurs with the RPV at an elevated pressure, high pressure melt injection could occur resulting in fragmented core debris being transported into the upper drywell. Water injection into the vessel by the ACIWA mode cannot reach this debris. In this scenario the drywell spray mode of the ACIWA mode must be used. The drywell spray mode is described in Subsection 5.4.7.1.1.10.2.

5.4.7.1.1.10.2 Drywell Spray Mode of ACIWA

The alternate injection path for the ACIWA mode is into the drywell spray header. The conditions in which drywell spray mode is used are described in the Emergency Procedure Guidelines in Appendix 18A. The purpose of drywell spray injection is to mitigate the consequences of core damage and to supply water to ex-vessel debris.

The water sprayed into the upper drywell absorbs heat from the RPV outer surfaces and the debris which relocates into the upper drywell, if any, upon vessel failure at high pressure. Cooling of the upper drywell prevents overtemperature failure of the seals. Water which collects on the upper drywell floor is directed into the wetwell through the connecting vents. The suppression pool water level will eventually rise to the point of overflowing into the pedestal region. When overflow occurs, the debris in the lower drywell will be covered with water.

Drywell spray operation provides significant mitigation of suppression pool bypass events in which the bypass path includes the drywell. The incoming water absorbs heat and condenses steam. While the heat absorption is not as efficient nor as extensive as what would occur if the suppression pool was not bypassed, the time to COPS activation or containment failure can be

delayed significantly. This delay results in a significant reduction in the radioactive release due to fission product decay and natural removal mechanisms.

The water sprayed into the upper drywell also scrubs fission products which are in the drywell airspace. Scrubbing reduces the amount of radioactive materials which are available for release from the containment.

Drywell spray injection is terminated when the containment water level reaches the bottom of the vessel. The basis for termination is the same as that for the vessel injection mode of the ACIWA system as described in Subsection 5.4.7.1.1.10.1.

5.4.7.1.1.10.3 ACIWA Flow Rate

The water flow rate of the ACIWA mode has been selected to optimize the containment pressurization after the onset of core damage. The flow rate supplied by the ACIWA mode of the RHR System using either the diesel-driven pump or the fire pump truck is between 0.04 m^3/s and 0.06 m^3/s for conditions between no containment backpressure and a back pressure equal to the COPS setpoint. This flow rate is sufficient to absorb decay heat while maximizing the time until water level reaches the bottom of the vessel, at which point water addition is terminated. The COL applicant shall perform analysis to determine if a flow reduction device (e.g., an orifice plate or a spool piece) is required to limit the flow from the diesel-driven pump and/or the fire pump truck to achieve the specified maximum flow. (See Subsection 5.4.15.3 for COL license information).

Flow rates outside the specified range will decrease the time to COPS actuation in situations in which containment heat removal is not recovered. Lower flow rates will result in some of the incoming water being vaporized, thereby increasing the rate of containment pressurization. Higher flow rates will decrease the length of time until the water level reaches the bottom of the RPV and flow is terminated. Containment pressurization ensues shortly after flow termination as the non-condensables are purged into the wetwell and net steam production begins. Therefore, the optimal injection flow rate is the amount that can just absorb the generated heat without exceeding saturated liquid conditions at containment pressure.

5.4.7.1.1.10.4 Containment Performance Without ACIWA

The ACIWA mode of the RHR System provides manual capability to prevent core damage when all emergency core cooling systems are lost. If core damage occurs and heat removal is not recovered, this system increases the time to COPS operation, provides cooling of the seals of the movable penetrations, and provides cooling of the seals of the drywell air space. Without ACIWA, the lower drywell would heat up after core damage and vessel failure until the passive flooder system actuates. Flooder actuation will provide water to the debris in the lower drywell in a similar manner as the ACIWA mode. However, the passive flooder does not add thermal mass to the containment, nor does it have the capability of mitigating suppression pool bypass.

Operation of the AC-independent water addition mode is entirely manual. All of the valves which must be opened or closed during fire water addition are located within the same ECCS valve room. The connection to add water using a fire truck pump is located outside the reactor building at grade level.

5.4.7.1.2 Design Basis for Isolation of RHR System from Reactor Coolant System

The low pressure portions of the RHR System are isolated from full reactor pressure whenever the primary system pressure is above the RHR System design pressure (see Subsection 5.4.7.1.3 for details). In addition, automatic isolation occurs for reasons of maintaining water inventory which are unrelated to line pressure rating. A low water level signal closes the RHR containment isolation valves that are provided for the shutdown cooling suction. Subsection 5.2.5 provides an explanation of the Leak Detection System and the isolation signal [see Subsection 5.2.5.2.1 (12) and Table 5.4-6].

The RHR pumps are protected against damage from a closed discharge valve by means of automatic minimum flow valves which open on low mainline flow and close on high mainline flow.

5.4.7.1.3 Design Basis for Pressure Relief Capacity

The relief valves in the RHR System are sized on the basis of thermal relief and valve bypass leakage only.

Redundant interlocks prevent opening valves to the low pressure suction piping when the reactor pressure is above the shutdown range. These same interlocks initiate valve closure on increasing reactor pressure.

Overpressure protection is achieved during system operation when the system is not isolated from the reactor coolant pressure. The RHR System is operational and not isolated from the Reactor Coolant System only when the reactor is depressurized. Two modes of operation are applicable: the flooder mode and the shutdown cooling mode. For the flooder mode, the injection valve opens through interlocks only for reactor pressure less than approximately 3.45 MPaG. For the shutdown cooling mode, the suction valves can be opened through interlocks only for reactor pressures less than approximately 0.93 MPaG. Once the system is operating in these lower pressure modes, events are not expected that would cause the pressure to increase. If, for some unlikely event the pressure would increase, the pressure interlocks that allowed the valves to initially open would cause the valves to close on increasing pressure. The RHR System piping would then be protected from overpressure. The valves close at low pressure, and the rate of pressure increase would be low. During the time period while the valves are closing at these low pressure conditions, the RHR System design and margins that satisfy the interfacing system LOCA provide ample overpressure protection.

In addition, a high pressure check valve will close to prevent reverse flow if the pressure should increase. Relief valves in the discharge piping are sized to account for leakage past the check valve and are coded in accordance with ASME Boiler and Pressure Vessel Code, Section III.

5.4.7.1.4 Design Basis with Respect to General Design Criterion 5

The RHR System for this unit does not share equipment or structures with any other nuclear unit.

5.4.7.1.5 Design Basis for Reliability and Operability

The design basis for the shutdown cooling mode of the RHR System is that this mode is controlled by the operator from the control room. The only operations performed outside of the control room for a normal shutdown are manual operation of local flushing water admission valves, which are the means of providing clean water to the shutdown portions of the RHR System.

Three separate shutdown cooling loops are provided, and, although the three loops are required for shutdown under normal circumstances, the reactor coolant can be brought to 100°C in less than 36 hours with only two loops in operation. The RHR System is part of the ECCS and therefore is required to be designed with redundancy, piping protection, power separation, etc., as required of such systems (see Section 6.3 for an explanation of the design bases for ECCS Systems).

Shutdown suction and discharge valves are required to be powered from both offsite and standby emergency power for purposes of isolation and shutdown following a loss of offsite power.

5.4.7.1.6 Design Basis for Protection from Physical Damage

The design basis for protection from physical damage, such as internally generated missiles, pipe break, seismic effects, and fires, are discussed in Sections 3.5, 3.6, 3.7, and Subsection 9.5.1.

5.4.7.2 Systems Design

5.4.7.2.1 System Diagrams

All of the RHR System components are shown in the P&ID (Figure 5.4-10). A description of the controls and instrumentation is presented in Subsection 7.3.1.1.1.

Figure 5.4-11 is the RHR process diagram and data. All of the sizing modes of the system are shown in the process data. The interlock block diagram (IBD) for the RHR System is provided in Section 7.3.

Interlocks are provided to prevent (1) drawing vessel water to the suppression pool, (2) opening vessel suction valves above the suction lines or the discharge line design pressure, (3) inadvertent opening of drywell spray valves during RHR operation where the injection valve to the reactor is open and when drywell pressure is not high enough to require the drywell spray

for pressure reduction, and (4) pump start when suction valve(s) are not open. A description of the RHR System logic (i.e., interlocks, permissives) is presented in Table 5.4-3.

5.4.7.2.2 Equipment and Component Description

(1) System Main pumps

The main pumps must satisfy the following system performance requirements. The pump equipment performance requirements include additional margins so that the system performance requirements can be achieved. These margins are standard equipment specification practice and are included in procurement specifications for flow and pressure measuring accuracy and for power source frequency variation.

Number of pumps	3
Pump type	Centrifugal
Drive unit type	Constant Speed Induction Motor
Design flow rate	954 m^3/h
Total discharge head at design flow rate	125m
Maximum bypass flow	147.6 m^3/h
Minimum total discharge head at maximum bypass flow rate	220m Max 195m Min
Maximum runout flow	1130 m^3/h
Maximum pump brake horsepower	550 kW
Net positive suction head (NPSH) at 1m above the pump floor setting	2.0m
Process fluid temperature range	10 to 182°C

(2) Heat Exchangers

The RHR heat exchangers have three major functional requirements imposed upon them, as follows:

(a) **Post-LOCA Containment Cooling—**The RHR System limits the peak bulk suppression pool temperature to less than 97°C by direct pool cooling with two out of the three divisions.

(b) **Reactor Shutdown—**The RHR System removes enough residual heat (decay and sensible) from the reactor vessel water to cool it to 60°C within 24 hours after the control rods are inserted. This mode shall be manually activated after a blowdown to the main condenser reduces the reactor pressure to below 0.93 MPaG with all three divisions in operation.

(c) **Safe Shutdown—**The RHR System brings the reactor to a cold shutdown condition of less than 100°C within 36 hours of control rod insertion with two out of the three divisions in operation. The RHR System is manually activated into the shutdown cooling mode below a nominal vessel pressure of 0.93 MPaG.

The RHR heat exchanger capacity is required to be sufficient to meet each of these functional requirements. The limiting function for the RHR heat exchanger capacity is reactor shutdown. The heat exchanger capacity, K, is 4.27×10^5 W/°C per heat exchanger.

The performance characteristics of the heat exchangers are shown in Table 5.4-4.

(3) Valves

All of the directional valves in the RHR System are conventional gate, globe, and check valves designed for nuclear service. The injection valves are high speed valves, as operation for RHR injection requires. Valve pressure ratings are to provide the control or isolation function as necessary (i.e., all vessel isolation valves are treated as Class 1 nuclear valves at the same pressure as the primary system).

(4) ECCS Portions of the RHR System

The ECCS portions of the RHR System include those sections that inject water into the reactor vessel.

The route includes suppression pool suction strainers, suction piping, RHR pumps, discharge piping, RHR heat exchangers, injection valves, and drywell piping into the vessel nozzles and core region of the reactor vessel.

Pool-cooling components include pool suction strainers, piping, pumps, heat exchangers, and pool return lines.

Containment spray components are the same as pool cooling components except that the spray headers replace the pool return lines.

5.4.7.2.3 Controls and Instrumentation

Controls and instrumentation for the RHR System are described in Section 7.3.

The relief valve for the RHR System (E11) are listed in Table 5.4-5 and the operating characteristics of each valve (i.e., their relieving pressure) are tabulated. The RHR relief valve is Quality Group B, Safety Class 2, and Seismic Category I. All of the relief valves in Table 5.4-5 are standard configurations meeting all applicable codes and standards. None of these valves is air operated nor can their setpoint be changed by the operators.

5.4.7.2.3.1 Interlocks

(1) The valves requiring a keylock switch are F001, F012, F029, and F014B, C as indicated on the RHR P&ID (Figure 5.4-10).

(2) It is not possible to open the shutdown connection to the vessel in any given loop whenever the pool suction, pool discharge valve or wetwell spray valves are open in the same loop to prevent draining the vessel to the pool.

(3) Redundant interlocks prevent opening the shutdown connections to and from the vessel whenever the pressure is above the shutdown range. Increasing pressure trip shall cause closure of these valves.

(4) A timer is provided in each pump minimum flow valve control circuitry so that the pump has an opportunity to attain rated speed and flow before automatic control of the valve is activated. This time delay is necessary to prevent a reactor water dump to the suppression pool during the shutdown operation.

(5) It is not possible to operate the RHR main pumps without an open suction source because these pumps are used for core, vessel and containment cooling and their integrity must be preserved.

(6) Redundant interlocks prevent opening and automatically closes the shutdown suction connections to the vessel in any given loop whenever a low reactor level signal is present.

(7) In the absence of a valid LOCA signal without high drywell pressure and without the injection valve being fully closed, it is not possible to open the drywell spray valves in a loop when the corresponding containment isolation valve in the same loop is open (i.e., the two valves, in series, are both not to be open during shutdown or surveillance testing).

5.4.7.2.3.2 Heat Exchanger Leak Detection

A radiation detector is provided in the main loop of the Reactor Building Cooling Water (RCW) System, which cools the secondary side of the RHR heat exchanger. If radioactive water from the primary side of the heat exchanger leaks to the secondary side, the radiation detector will signal a radiation increase soon after the RHR System is started. Conformation is achieved through a sample port on the specific RHR pipeline of the RCW System.

5.4.7.2.4 Applicable Codes and Classifications

(1) Piping, Pumps, and Valves

(a) Process side ASME III Class 1/2

(b) Service water side ASME III Class 3

(2) Heat Exchangers

(a) Process side ASME III Class 2

TEMA Class C

(b) Service water side ASME III Class 3

TEMA Class C

(3) Electrical Portions

(a) IEEE-279

(b) IEEE-308

5.4.7.2.5 Reliability Considerations

The RHR System has included the redundancy requirements of Subsection 5.4.7.1.5. Three completely redundant loops have been provided to remove residual heat, each powered from a separate emergency bus. All mechanical and electrical components are separate. Two out of three are capable of shutting down the reactor within a reasonable length of time.

5.4.7.2.6 Manual Action

(1) Emergency Mode [Low pressure flooder (LPFL) mode]

Each loop in the subsystem is initiated automatically by a low water level in the reactor vessel or high pressure in the drywell. Each loop in the system can also be placed in operation by means of a Manual Initiation pushbutton switch.

During the LPFL mode, water is initially pumped from the suppression pool and diverted through the minimum flow lines until the injection valve in the discharge line is signalled to open on low reactor pressure. As the injection valve opens on low reactor pressure, flow to the RPV comes from the suppression pool, through the RHR heat exchanger, and the injection valve. This creates a flow signal that closes the minimum flow line.

The system remains in the operating mode until manually stopped by the operator.

(2) Test Mode

Full flow functional testing of the RHR System can be performed during normal plant operation or during plan shutdown by manual operation of the RHR System from the control room. For plant testing during normal plant operation, the pump is started and the return line to the suppression pool is opened. A reverse sequence is used to terminate this test. Upon receipt of an automatic initiation signal while in the flow testing mode, the RHR System is returned to automatic control.

(3) Suppression Pool Cooling

The suppression cooling (SPC) mode of RHR can be initiated and stopped manually. The SPC mode removes heat released into the suppression pool, as necessary, following heat additions to the pool. During this mode of operation, water is pumped from the suppression pool through the RHR heat exchangers, and back to the suppression pool. This RHR SPC mode is also initiated automatically as described in Subsection 5.4.7.1.1.5.

(4) Wetwell and Drywell Spray Cooling

Two of the RHR loops provide containment spray cooling subsystems. Each subsystem provides both wetwell and drywell spray cooling. This subsystem provides steam condensation and primary containment atmospheric cooling following a LOCA by pumping water from the suppression pool, through the heat exchangers and into the wetwell and drywell spray spargers in the primary containment. The drywell spray mode is initiated by manual operator action post-LOCA in the presence of high drywell pressure. The wetwell spray mode is initiated as required by manual operator action. If the wetwell spray is operated without drywell spray, it will be in conjunction with suppression pool cooling to achieve rated flow through the RHR heat exchanger for containment cooling. The drywell spray mode is terminated automatically following a LOCA signal as the injection valve

opens, and the wetwell spray is terminated automatically by a LOCA signal. Both drywell and wetwell spray can be terminated manually by operator action with no permissive interlocks to be satisfied.

(5) Shutdown Cooling

The Shutdown Cooling Subsystem is manually activated by the operator following insertion of the control rods and normal blowdown to the main condenser. In this mode, the RHR System removes residual heat (decay and sensible) from the reactor vessel water at a rate sufficient to cool it to 60°C within 24 hours after the control rods are inserted. The subsystem can maintain or reduce this temperature further so that the reactor can be refueled and serviced.

Reactor water is cooled by pumping it directly from the reactor shutdown cooling nozzles, through the RHR heat exchangers, and back to the vessel (via feedwater on loop A and via the LPFL Subsystem on the other two loops).

This system is initiated and shut down by manual operator action.

(6) Fuel Pool Cooling

All three RHR loops can provide supplemental fuel pool cooling during normal refueling activities and any time the fuel pool heat load exceeds the cooling capacity of the fuel pool heat exchangers. For normal refueling activities where the reactor well is flooded and the fuel pool gates are open, water is drawn from the reactor shutdown suction lines, pumped through the RHR heat exchangers and discharged through the reactor well distribution spargers. For 100% core removal, if necessary, water is drawn from the Fuel Pool Cooling (FPC) System skimmer surge tanks, pumped through the RHR heat exchangers and returned to the fuel pool via the FPC System cooling lines. These operations are initiated and shut down by operator action.

(7) Reactor Well and Equipment Pool Drain

The RHR System provides routing and connections for emptying the reactor well and equipment pool to the suppression pool after servicing. Water is pumped or drained by gravity through the FPC System return lines to the RHR shutdown suction lines and then to the suppression pool.

(8) AC-Independent Water Addition

The RHR System is provided with piping and valves which connect the RHR loop C pump discharge piping to the Fire Protection System (FPS) and to a reactor building external fire truck pump hookup. These connections allow for addition of FPS water to the reactor pressure vessel, or the drywell spray header or wetwell spray header

during events when AC power is unavailable from both onsite and offsite sources. Operation of the RHR System in the AC-independent water addition mode (Alternating Current-independent) is entirely manual. All valves required to be opened or closed for operation are located within the same loop C ECCS valve room to provide ease of operation.

5.4.7.3 Performance Evaluation

RHR System performance depends on sizing its heat exchanger and pumping flow rate characteristics with enough capacity to satisfy the most limiting events. The worst case transient established the heat exchanger size, given the pumping flow of 954 m^3/h for each RHR loop. The shutdown cooling mode requirements were satisfied within the RHR characteristics established by the worst case transient.

5.4.7.3.1 Shutdown with All Components Available

A typical curve is not included to show vessel cooldown temperatures versus time because of the infinite variety of such curves that is possible due to: (1) clean steam systems that may allow the main condenser to be used as the heat sink when nuclear steam pressure is insufficient to maintain steam air ejector performance; (2) the condition of fouling of the exchangers; (3) operator use of one or two cooling loops; (4) coolant water temperature; and (5) system flushing time. Since the exchangers are designed for the fouled condition with relatively high service water temperature, the units have excess capability to cool when first cut in at high vessel temperature. Total flow and mix temperature must be controlled to avoid exceeding a 55°C/hour cooldown rate. See Subsection 5.4.7.1.1.7 for minimum shutdown time to reach 100°C.

5.4.7.3.2 Worst Case Transient

Several limiting events were considered for RHR heat exchanger sizing. Those events were:

(1) Feedwater line break (FWLB)

(2) Main steamline break

(3) Inadvertent opening of a relief valve

(4) Normal shutdown

(5) Emergency shutdown

(6) ATWS

It was determined for post-LOCA suppression pool temperature control, that the FWLB is the most limiting event. The worst case conditions for the event assumes one RHR heat exchanger failure instead of one diesel generator failure. When one heat exchanger fails, the heat generated

by the pump is still added to the containment, and also one additional pump flow carries the reactor decay heat more effectively to the suppression pool. Therefore, a single failure of a RHR heat exchanger is the most limiting single failure.

The heat exchanger size was established to limit the suppression pool peak temperature to 97°C. This is acceptable to the ABWR for the following reasons:

(1) The ABWR wetwell pressure becomes high, high enough to provide more than 11°C subcooling with 97°C pool temperature when the peak pool temperature occurs.

(2) Because it takes 4 to 6 hours to reach the peak pool temperature, shutdown cooling will be initiated before the peak pool temperature. The energy release from the reactor will be controlled by the shutdown cooling system, and there is no need to release the reactor energy to the pool.

5.4.7.3.3 Emergency Shutdown Cooling

The design requirements for ABWR emergency shutdown cooling capability are specified in Regulatory Guide 1.139, as follows:

> The reactor Shutdown Cooling System (SDCS) should be capable of bringing the reactor to a cold shutdown condition within 36 hours following reactor shutdown with only offsite power or onsite power available, assuming the most limiting single failure.

The limiting condition is for the case with loss of offsite power which would disable the forced circulation. The most limiting single failure is the loss of one RHR division (designated as N-1 case). Therefore, for the emergency shutdown cooling purpose, one of the bases of RHR heat exchanger sizing is to meet the following requirements:

> The ABWR RHR in the shutdown cooling mode should be capable of bringing the reactor to cold shutdown conditions (100°C) within 36 hours following reactor shutdown for N-1 case, with only onsite power available.

The ABWR selected design configuration meets all design requirements and is consistent with the heat exchanger size required for post-LOCA pool temperature control.

5.4.7.3.4 Normal Shutdown Cooling

After a normal blowdown to the main condenser, the Shutdown Cooling Subsystem is activated. In this mode of operation, the RHR System shall be capable of removing enough residual heat (decay and sensible) from the reactor vessel water to cool it to 60°C within 24 hours after the control rods are inserted.

Normal shutdown cooling is a non-safety-related event and is therefore analyzed assuming that all three RHR loops are operational.

The design heat exchanger capacity is sufficient to meet the normal shutdown cooling criteria.

5.4.7.4 Pre-operational Testing

The pre-operational test program and startup tests program discussed in Chapter 14 are used to generate data to verify the operational capabilities of each piece of equipment in the system, including each instrument, setpoint, logic element, pump, heat exchanger, valve, and limit switch. In addition, these programs verify the capabilities of the system to provide the flows, pressures, cooldown rates, and reaction times required to perform all system functions as specified for the system or component in the system data sheets and process data.

Logic elements are tested electrically; valves, pumps, controllers, and relief valves are tested mechanically. Finally, the system is tested for total system performance against the design requirements using both the offsite power and standby emergency power. Preliminary heat exchanger performance can be evaluated by operating in the pool cooling mode, but a vessel shutdown is required for the final check due to the small temperature differences available with pool cooling. Appendix 5B outlines RHR injection flow and heat capacity analyses.

5.4.8 Reactor Water Cleanup System

The Reactor Water Cleanup (CUW) System is classified as a primary power generation system, a part of which forms a portion of the reactor coolant pressure boundary (RCPB). The remaining portion of the system is not part of the RCPB because it can be isolated from the reactor. The CUW System may be operated at any time during normal reactor operations.

5.4.8.1 Design Basis

The CUW System performs the following functions:

(1) Removes solid and dissolved impurities from the reactor coolant and measures the reactor water conductivity in accordance with Regulatory Guide 1.56, “Maintenance of Water Purity in Boiling Water Reactors”.

(2) Provides containment isolation that places the major portion of the CUW system outside the RCPB, limiting the potential for significant release of radioactivity from the primary system to the secondary containment.

(3) Discharges excess reactor water during startup, shutdown, and hot standby conditions to the radwaste or main condenser.

(4) Provides full system flow to the RPV head spray as required for rapid RPV cooldown and rapid refueling.

(5) Minimizes RPV temperature gradients by maintaining circulation in the bottom head of the RPV during periods when the reactor internal pumps are unavailable.

The CUW System is automatically removed from service upon SLCS actuation. This isolation prevents the standby liquid reactivity control material from being removed from the reactor water by the cleanup system. The design of the CUW system is in accordance with Regulatory Guides 1.26 and 1.29.

5.4.8.2 System Description

The CUW System is a closed-loop system of piping, circulation pumps, a regenerative heat exchanger, non-regenerative heat exchangers, reactor water pressure boundary isolation valves, a reactor water sampling station, (part of the sampling system) and two precoated filter-demineralizers. During blowdown of reactor water swell, the loop is open to the radwaste or main condenser. The single loop has two parallel pumps taking common suction through a regenerative heat exchanger (RHX) and two parallel non-regenerative heat exchangers (NRHX) from both the single bottom head drain line and the shutdown cooling suction line of the RHR loop “B”. A bypass line around the filter-demineralizer (F/D) units is also provided (see system P&ID in Figure 5.4-12). The IBD is provided in Figure 5.4-14.

The total capacity of the system, as shown on the process flow diagram in Figure 5.4-13, is equivalent to 2% of rated feedwater flow. Each pump and F/D is capable of 100% system capacity operation. Each of two NRHX is capable of 50% system capacity operation, with the one RHX capable of 100% system capacity operation.

The operating temperature of the filter-demineralizer units is limited by the ion exchange resins; therefore, the reactor coolant must be cooled before being processed in the F/D units. The regenerative heat exchanger (RHX) transfers heat from the tubeside (hot process inlet) to the shellside (cold process return). The shellside flow returns to the reactor. The non-regenerative heat exchanger (NRHX) cools the process further by transferring heat to the Reactor Building Cooling Water System. A temperature sensor is provided at the outlet of the NRHX to monitor and automatically isolate the F/D units if the temperature goes above the high-high setpoint. High-high temperature condition is also annunciated in the main control room. Following the high temperature isolation, the F/D bypass valve is automatically opened.

The F/D design is vendor specific. A typical design of the filter-demineralizer is discussed below. The F/D units are pressure precoat-type filters using powdered ion-exchange resins. Spent resins are not regenerated and are sluiced from the F/D unit to a backwash receiving tank from which they are transferred to the radwaste system for processing and disposal. To prevent resins from entering the reactor in the event of failure of a F/D resin support, a strainer is installed on the F/D unit. Each strainer and F/D vessel has a control room alarm that is energized by high differential pressure. Upon further increase in differential pressure from the alarm point, the filter demineralizer will automatically isolate.

The backwash and precoat cycle for a F/D unit is automatic to minimize the need for operator intervention. The F/D piping configuration is arranged such that resin transfer is complete and resin traps are eliminated.

In the event of low flow or loss of flow in the system, the precoat is maintained on the septa by a holding pump. Sample points are provided in the common influent header and in each effluent line of the F/D units for continuous indication and recording of system conductivity. High conductivity is annunciated in the control room. The influent sample point is also used as the normal source of reactor coolant grab samples. Sample analysis also indicates the effectiveness of the F/D units.

Each F/D vessel is installed in an individual shielded compartment. The compartments do not require accessibility during operation of the F/D unit. Shielding is required due to the concentration of radioactive products in the F/D process system. Service space is provided for the filter-demineralizer for septa removal. All inlet, outlet, vent, drain, and other process valves are located outside the F/D compartment in a separate shielded area, together with the necessary piping, strainers, holding pumps and instrument elements. Process equipment and controls are arranged so that all normal operations are conducted at the panel from outside the vessel or valve and pump compartment shielding walls. Access to the F/D compartment is normally permitted only after removal of the precoat. Penetrations through compartment walls are located so as not to compromise radiation shielding requirements. Primarily, this affects nozzle locations on tanks so that wall penetrations do not “see” the tanks. Generally, this means piping through compartment walls are above, below, or to the side of F/D units. The local control panel is outside the vessel compartment and process valve cell, located convenient to the CUW System. The tank which receives backwash is located in a separate shielded room below the F/D units.

The F/D vents are piped to the backwash receiving tank. Piping vents and drains are directed to low conductivity collection in radwaste. System pressure relief valves are piped to radwaste (see Figure 5.4-12 for a typical configuration).

The suction line (RCPB portion) of the CUW System contains two motor-operated containment isolation valves which automatically close in response to signals from the LDS. LDS isolation signal for CUW consists of low reactor water level, high ambient main steam tunnel area temperature, high mass differential flow, high ambient CUW equipment area temperature, and activation of SLCS pump. Subsection 7.3.1.1.2 also describes the above isolation signals and are summarized in Table 5.2-6. This isolation prevents (1) loss of reactor coolant and release of radioactive material from the reactor, and (2) removal of liquid reactivity control material by the cleanup system should the SLCS be in operation. The RCPB isolation valves may be remote manually operated to isolate the system equipment for maintenance or servicing. Discussion of the RCPB is provided in Section 5.2.

A motor-operated valve, actuated by the LDS, on the return line to the feedwater lines provides long term leakage control. Instantaneous reverse flow isolation is provided by check valves in the CUW piping and feedwater line connection inside the steam tunnel.

CUW System operation is controlled from the main control room. Filter-demineralizing operations, which include backwashing and precoating, are controlled automatically from a process controller or manually from a local panel.

5.4.8.3 System Evaluation

The CUW System, in conjunction with the condensate treatment system and the FPCC System, maintains reactor water quality during all reactor operating modes (normal, hot standby, startup, shutdown, and refueling).

The CUW System has process interfaces with the RHR, control rod drive, nuclear boiler, radwaste, fuel pool cooling and cleanup (FPC), reactor building cooling water systems, RPV, and main condenser. The CUW suction is from the RHR "B" shutdown suction line and the RPV bottom head drain. The CUW main suction line is provided with a flow restrictor inside containment for flow monitoring and break flow restricting functions. The flow restrictor has a maximum throat diameter of 135 mm. A remote manually-operated shutoff valve (not a containment isolation valve) is also provided at the CUW suction line upstream of the containment valves. The RPV bottom head drain line is connected to the CUW main suction line by a "tee". The center line of the "tee" connection is at an elevation of at least 460 mm above the center line of the variable leg nozzle of the RPV wide range water level instrument (or at least 389 mm above the top of active fuel). In the unlikely event of unisolated CUW line break the CUW suction shutoff valve will be used to isolate the break. If unsuccessful, the RPV water level will be maintained at the elevation of the "tee" connection. A more detailed discussion regarding CUW unisolated line break is provided in Section 19.9.1. The CUW System main process pump motor cavities are purged by water from the CRD System. CUW System return flow is directed to either the NBS (feedwater lines), directly to the RPV through the RPV head spray, main condenser or radwaste through the CUW dump line. CUW F/D backwash is to the backwash receiving tank (BWRT) located in the FPC (BWRT accommodates backwash from the CUW, the FPC, and the Suppression Pool Cleanup Systems). The NRHX is cooled by the Reactor Building Cooling Water (RCW) System. Other utility or support interfaces exist with the instrument air system and the condensate and plant air systems for the F/D backwash.

The type of pressure precoat cleanup system used in this system was first put into operation in 1971 and has been in use in all BWR plants brought online since then. Operating plant experience has shown that the CUW System, designed in accordance with these criteria, provides the required BWR water quality. The ABWR CUW System capacity has been increased to a nominal of 2% of rated feedwater from the original 1% size. This added capacity provides additional margin against primary system intrusions and component availability. The NHRX is sized to maintain the required process temperature for 100% system flow. During periods of water rejection to the main condenser or radwaste, CUW System flow may be reduced slightly to compensate for the loss of cooling flow through the RPV return side of the RHX.

The CUW System is classified as a non-safety system. The RCPB isolation valves are classified as safety-related. System piping and components within the drywell, up to and including the

outboard containment isolation valves, and interconnecting piping assembly, are Seismic Category I, Quality Group A. All other non-safety equipment is designed as Nonseismic, Quality Group C. Low pressure piping in the backwash and precoat area downstream of the high pressure block valves is designed to Quality Group D.

The carbon steel portion of the CUW piping will be CS-SA-333-Grade 6 material. This material is subject to ASME Code requirements and the material will be tested for nil ductility to -10°C. Refer also to Subsection 5.2.3.3.1 for fracture toughness testing requirements.

The CUW System containment isolation valves will be designed and tested to meet closure requirements under full flow, maximum blowdown differential pressure break configuration and flow instability conditions.

The manufacturer will be required to conduct factory or valve test lab demonstration test prior to their use in the plant.

The CUW System valving configurations between the system pump discharge piping and connections to the feedwater system will be designed and installed for various break locations. Specifically, breaks in the MS tunnel or in the system equipment compartment coincident with single active component failures (e.g. check valve failures) will not result in feedwater reverse flow into the CUW System compartments.

The CUW containment isolation valves power supplies are listed in Table 6.2-7. Each of the two CUW pumps receives its power from separate plant investment protection (PIP) buses, as depicted in Figure 8.3-1. Power to the CUW differential sensors is addressed in Section 7.3.1.1.2. All other CUW components receive power from their respective non-Class 1E load groups (i.e., from bus A or Bus B as appropriate).

A tabulation of CUW System equipment data, including temperature pressure and flow capacity, is provided in Table 5.4-6.

The CUW containment isolation valves power supplies are listed in Table 6.2-7. Each of the two CUW pumps receives its power from separate plant investment protection (PIP) buses, as depicted in Figure 8.3-1. Power to the CUW differential sensors is addressed in Section 7.3.1.1.2. All other CUW components receive power from their respective non-Class 1E load groups (i.e., from Bus A or Bus B as appropriate).

5.4.9 Main Steamlines and Feedwater Piping

5.4.9.1 Safety Design Bases

In order to satisfy the safety design bases, the main steam and feedwater lines are designed as follows:

(1) The main steam, feedwater, and associated drain lines are protected from potential damage due to fluid jets, missiles, reaction forces, pressures, and temperatures resulting from pipe breaks.

(2) The main steam, feedwater, and drain lines are designed to accommodate stresses from internal pressures and earthquake loads without a failure that could lead to the release of radioactivity in excess of the guideline values in published regulations.

(3) The main steam and feedwater lines are accessible for inservice testing and inspection.

(4) The main steamlines are analyzed for dynamic loadings due to fast closure of the turbine stop valves.

(5) The main steam and feedwater piping from the reactor through the seismic interface restraint is designed as Seismic Category I.

(6) The main steam and feedwater piping and smaller connected lines are designed in accordance with the requirements of Table 3.2-1.

5.4.9.2 Power Generation Design Bases

(1) The main steamlines are designed to conduct steam from the reactor vessel over the full range of reactor power operation.

(2) The feedwater lines are designed to conduct water to the reactor vessel over the full range of reactor power operation.

5.4.9.3 Description

The main steam piping is described in Section 10.3. The main steam and feedwater piping from the reactor through the containment isolation interfaces is diagrammed in Figure 5.1-3.

As discussed in Table 3.2-1 and shown in Figure 5.1-3, the main steamlines are Quality Group A from the reactor vessel out to and including the outboard MSIV and Quality Group B from the outboard MSIVs to the turbine stop valve. They are also Seismic Category I only from the reactor pressure vessel out to the seismic interface restraint.

The feedwater piping consists of two 550A diameter lines from the feedwater supply header to the reactor. On each of the feedwater lines from the common feedwater supply header, there shall be a seismic interface restraint. The seismic interface restraint shall serve as the boundary between the Seismic Category I piping and the non-seismic piping. Downstream of the seismic restraint, there is a remote manual, motor-operated valve powered by a non-safety-grade bus. These motor-operated valves serve as the shutoff valves for the feedwater lines. Isolation of each line is accomplished by two containment isolation valves, consisting of one check valve inside the drywell and one positive closing check valve outside the containment (Figure 5.1-3). The closing check valve outside the containment is a spring-closing check valve that is held open by air. These check valves will be qualified to withstand the dynamic effects of a feedwater line break outside containment. Inside the containment, downstream of the inboard FW line check valve, there is a manual maintenance valve (B21-F005).

The design temperature and pressure of the feedwater line is the same as that of the reactor inlet nozzle (i.e., 8.62 MPa and 302°C) for turbine-driven feedwater pumps.

As discussed in Table 3.2-1 and shown in Figure 5.1-3, the feedwater piping is Quality Group A from the reactor pressure vessel out to, and including, the outboard isolation valve, Quality Group B from the outboard isolation valve to and including the shutoff valve, and Quality Group D beyond the shutoff valve. The feedwater piping and all connected piping of 65A and larger size is Seismic Category I only from the reactor pressure vessel out to, and including, the seismic interface restraint.

The materials used in the piping are in accordance with the applicable design code and supplementary requirements described in Section 3.2. The valve between the outboard isolation valve and the shutoff valve upstream of the RHR entry to the feedwater line is to effect a closed loop outside containment (CLOC) for containment bypass leakage control (Subsections 6.2.6 and 6.5.3).

The general requirements of the feedwater system are described in Subsections 7.7.1.1, 7.7.1.4, 7.7.2.4, and 10.4.7.

5.4.9.4 Safety Evaluation

Differential pressure on reactor internals under the assumed accident condition of a ruptured steamline is limited by the use of flow restrictors and by the use of four main steamlines. All main steam and feedwater piping will be designed in accordance with the requirements defined in Section 3.2. Design of the piping in accordance with these requirements ensures meeting the safety design bases.

5.4.9.5 Inspection and Testing

Testing is carried out in accordance with Subsection 3.9.6 and Chapter 14. Inservice inspection is considered in the design of the main steam and feedwater piping. This consideration assures adequate working space and access for the inspection of selected components.

5.4.10 Pressurizer

Not applicable to BWR.

5.4.11 Pressurizer Relief Discharge System

Not applicable to BWR.

5.4.12 Valves

5.4.12.1 Safety Design Bases

Line valves, such as gate, globe, and check valves, are located in the fluid systems to perform a mechanical function. Valves are components of the system pressure boundary and, having moving parts, are designed to operate efficiently to maintain the integrity of this boundary.

The valves operate under the internal pressure/temperature loading as well as the external loading experienced during the various system transient operating conditions. The design criteria, the design loading, and acceptability criteria are as specified in Subsection 3.9.3 for ASME Class 1, 2, and 3 valves. Compliance with the ASME Code is discussed in Subsection 5.2.1.

5.4.12.2 Description

Line valves are manufactured standard types designed and constructed in accordance with the requirements of ASME Code Section III for Class 1, 2, and 3 valves. All materials, exclusive of seals, packing, and wearing components, shall endure the 60-year plant life under the environmental conditions applicable to the particular system when appropriate maintenance is periodically performed.

Power operators will be sized to operate successfully under the maximum differential pressure determined in the design specification.

5.4.12.3 Safety Evaluation

Line valves will be shop tested by the manufacturer for performability. Pressure-retaining parts are subject to the testing and examination requirements of Section III of the ASME Code. To minimize internal and external leakage past seating surfaces, maximum allowable leakage rates are stated in the design specifications for both back seat as well as the main seat for gate and globe valves.

Valve construction materials are compatible with the maximum anticipated radiation dosage for the service life of the valves.

5.4.12.4 Inspection and Testing

Valves serving as containment isolation valves which must remain closed or open during normal plant operation may be partially exercised during this period to assure their operability at the time of an emergency or faulted condition. Other valves, serving as a system block or throttling valves, may be exercised when appropriate.

Leakage from critical valve stems is monitored by use of double-packed stuffing boxes with an intermediate lantern leakoff connection for detection and measurement of leakage rates.

Motors used with valve actuators will be furnished in accordance with applicable industry standards. Each motor actuator will be assembled, factory tested, and adjusted on the valve for proper operation, position, torque switch setting, position transmitter function (where applicable), and speed requirements. Valves will be tested to demonstrate adequate stem thrust (or torque) capability to open or close the valve within the specified time at specified differential pressure. Tests will verify no mechanical damage to valve components during full stroking of the valve. Suppliers will be required to furnish assurance of acceptability of equipment for the intended service based on any combination of:

(1) Test stand data

(2) Prior field performance

(3) Prototype testing

(4) Engineering analysis

Pre-operational and operational testing performed on the installed valves consists of total circuit checkout and performance tests to verify speed requirements at specified differential pressure.

5.4.13 Safety/Relief Valves

The reactor component and subsystem SRVs are listed in Table 5.4-5. The RHR relief valve is discussed separately in Subsection 5.4.7.1.3.

5.4.13.1 Safety Design Bases

Overpressure protection is provided at isolatable portions of the SLC, RHR, HPCF, and RCIC Systems. The relief valves will be selected in accordance with the rules set forth in the ASME Code Section III, Class 1, 2, and 3 components. Other applicable sections of the ASME Code, as well as ANSI, API, and ASTM Codes, will be followed.

5.4.13.2 Description

Pressure relief valves have been designed and constructed in accordance with the same Code class as that of the line valves in the system.

Table 3.2-1 lists the applicable Code classes for valves. The design criteria, design loading, and design procedure are described in Subsection 3.9.3.

5.4.13.3 Safety Evaluation

The use of pressure-relieving devices will assure that overpressure will not exceed 10% above the design pressure of the system. The number of pressure-relieving devices on a system or portion of a system has been determined on this basis.

5.4.14 Component Supports

Support elements are provided for those components included in the RCPB and the connected systems.

5.4.14.1 Safety Design Bases

Design loading combinations, design procedures, and acceptability criteria are as described in Subsection 3.9.3. Flexibility calculations and seismic analysis for Class 1, 2, and 3 components are to be confirmed with the appropriate requirements of ASME Code Section III.

Support types and materials used for fabricated support elements are to conform with Sections NF-2000 and NF-3000 of ASME Code Section III. Pipe support spacing guidelines of Table NF-3611-1 in ASME Code Section III, are to be followed.

5.4.14.2 Description

The use and the location of rigid-type supports, variable or constant spring-type supports, snubbers, and anchors or guides are to be determined by flexibility and seismic/dynamic stress analyses. Component support elements are manufacturer standard items. Direct weldment to thin wall pipe is to be avoided where possible.

5.4.14.3 Safety Evaluation

The flexibility and seismic/dynamic analyses to be performed for the design of adequate component support systems include all temporary and transient loading conditions expected by each component. Provisions are to be made to provide spring-type supports for the initial dead weight loading due to hydrostatic testing of steam systems to prevent damage to this type support.

5.4.14.4 Inspection and Testing

After completion of the installation of a support system, all hangers and snubbers are to be visually examined to assure that they are in correct adjustment to their cold setting position.

Upon hot startup operations (Subsection 3.9.2.1.2), thermal growth will be observed to confirm that spring-type hangers will function properly between their hot and cold setting positions. Final adjustment capability is provided on all hangers and snubbers. Weld inspections and standards are to be in accordance with ASME Code Section III. Welder qualifications and welding procedures are in accordance with ASME Code Section IX and NF-4300 of ASME Code Section III.

5.4.15 COL License Information

5.4.15.1 Testing of Main Steam Isolation Valves

COL applicants will test the steam isolation valves in actual operating conditions (6.87 MPaG, 286°C).

5.4.15.2 Analysis of Non-Design Basis Loss of AC Coping Capability

5.4.15.2.1 Analysis to Demonstrate the Facility Has 8 Hour Non-Design SBO Capability

COL applicants shall provide the analyses for the as-built facility to demonstrate that the facility has the 8-hour non-design basis SBO capability discussed in Subsection 5.4.6. These analyses will utilize realistic, best-estimate assumptions and analysis methods. The analyses will consider:

- capability of the Class 1E DC power supply systems
- capacity of the RCIC water supply sources
- ability of required equipment to survive high temperature conditions in the region of the Reactor Building housing the RCIC equipment.

These evaluations will be documented in an RCIC Eight Hour Station Blackout Capability report.

5.4.15.2.2 Analysis to Demonstrate That the DC Batteries and SRV/ADS Pneumatics Have Sufficient Capacity

COL applicants shall provide the analyses for the as-built facility to demonstrate that the DC batteries and SRV/ADS pneumatics have sufficient capacity to open and maintain open SRVs necessary to depressurize the reactor coolant system (RCS) following RCIC failure due to battery failure (at about 8 hours) so that the ACIWA can inject to the core.

5.4.15.3 ACIWA Flow Reduction

The COL applicant shall perform an analysis to determine if a flow reduction device is required as specified in Subsection 5.4.7.1.1.10.3.

5.4.15.4 RIP Installation and Verification During Maintenance

The COL applicant shall develop procedures to ensure appropriate installation and verification of motor bottom cover, as well as visual monitoring of the potential leakage during impeller-shaft and maintenance plug removal have been considered. In addition, the COL applicant shall develop a contingency plan (e.g., close personnel access hatch, safety injection) which assures that core and spent fuel cooling can be provided in the event that a loss of coolant occurs during RIP maintenance.

5.4.16 References

5.4-1 "Design and Performance of General Electric Boiling Water Reactor Main Steamline Isolation Valves", General Electric Co., Atomic Power Equipment Department, March 1969 (APED-5750).

Table 5.4-1 Reactor Recirculation System Design Characteristics

Number of Reactor Internal Pumps (RIP) and Heat Exchangers–10

RIP Motor Housing and Heat Exchanger Shell	
Internal Design Pressure	8.62 MPaG
Internal Design Temperature	302°C
RIP Motor Heat Exchanger Tubes	
Design Pressure	
External	8.62 MPaG
Internal	1.37 MPaG
Design Temperature	
External	302°C
Internal	70°C

Single RIP Parameters at Rated Reactor Power and Rated Core Flow given below:

Pump	**10 RIPs Operating**	**9 RIPs Operating**
Flow (10^3 m^3/h)	6,912	8,291
Flow (10^6 kg/hr)	5.22	6.26
Total Developed Head (m)	32.6	35.8
Suction Pressure (MPaA)	7.25	7.25
Required NPSH (m)	5.6	10.2
Available NPSH (m)	134	134
Water Temperature (max °C)	278	278
Pump Brake Horsepower (MW)	~0.590	~0.777
Motor		
Motor Type	Wet Induction	
Rated Speed (rad/s)	~141.4	~157.1
Minimum Speed (rad/s)	47.1	47.1
Phase	3	3
Frequency (Hz) variable	0-50	0-50
Rotational Inertia (kg·m)	17.5-26.5	17.5-26.5
Rated Voltage	~3.3 kV	~3.3 kV

Table 5.4-1a Net Positive Suction Head (NPSH) Available to RCIC Pumps

A Suppression pool is at its minimum depth, El. –3740 mm.

B. NPSH Reference level* is at El. –7200 mm.

C. Suppression pool water is at its maximum temperature for the given operating mode, 77°C.

D. Pressure is atmospheric above the suppression pool.

E. Minimum suction strainer area as committed to by Appendix 6C methods.

NPSH available = $H_{ATM} + H_S – H_{VAP} – (H_F+H_{ST})$

where:

H_{ATM}	=	Atmospheric head
H_S	=	Static head
H_{VAP}	=	Vapor pressure head
H_F	=	Maximum frictional head excluding strainer frictional head

Minimum Expected NPSH
RCIC pump flow is 182 m^3/h

Maximum suppression pool temperature is 77°C. However, for conservatism, 100 °C is used to calculate the following values.

H_{ATM}	=	10.77m
H_S	=	3.46m
H_{VAP}	=	4.39m

NPSH available = $10.77 + 3.46 – 4.39-(H_F+H_{ST})$

NPSH available = $9.84- (H_F + H_{ST})$

NPSH required = 7.0m

Margin** = $2.84m - (H_F + H_{ST}) = NPSH_{available} – NPSH_{required}$

* NPSH Reference Level is 1m above pump floor level.

** The final system design will meet the required NPSH with adequate margin.

Table 5.4-2 Design Parameters for RCIC System Components

(1) RCIC Pump Operation (C001)		
Flow rate	Injection flow – 182 m^3/h	
Water temperature range	10° to 60°C, continuous duty 40° to 77°C, short duty	
NPSH	7.0m minimum	
Developed head	900m at 8.22 MPaA reactor pressure	
	186 m at 1.14 MPaA reactor pressure	
Maximum pump shaft power	675 kW at 900m developed head 125 kW at 186m developed head	
Design pressure	11.77 MPaG	
(2) RCIC Turbine Operation (C002)		
	High Pressure Condition	Low Pressure Condition
Reactor pressure (saturated temperature)	8.19 MPaA	1.14 MPaA
Steam inlet pressure	8.12 MPaA, minimum	1.03 MPaA, minimum
Turbine exhaust pressure	0.11 to 0.18 MPaA, maximum	0.11 to 0.18 MPaA, maximum
Design inlet pressure	8.62 MPaG at saturated temperature	
Design exhaust pressure	8.62 MPaG at saturated temperature	
(3) Flow element (FE007)		
Flow at full meter differential pressure	250 m^3/h	
Normal temperature	10 to 77°C	
System design pressure/temperature	8.62 MPaG/302°C	
Maximum unrecoverable loss at normal flow	0.031 MPa	
Installed combined accuracy (Flow element, Flow transmitter and Flow indicator)	±2.5% at normal flow and normal	
(4) Valve Operation Requirements		
Steam supply valve (F037)	Open and/or close against full differential pressure of 8.12 MPa within 15 seconds	
Pump discharge valve (F004)	Open and/or close against full differential pressure of 9.65 MPa within 15 seconds	

Table 5.4-2 Design Parameters for RCIC System Components (Continued)

Pump minimum flow bypass valve (F011)	Open and/or close against full differential pressure of 9.65 MPa within 5 seconds
RCIC steam isolation valve (F035&F036)	Open and/or close against full differential pressure of 8.12 MPa within 30 seconds
Pump suction relief valve (F017)	1.48 MPaA setting; 2.3 m^3/h at 10% accumulation
Pump test return valve (F008)	Capable of throttling control against differential pressures up to 7.58 MPa and closure against differential pressure at 9.65 MPa
Pump suction valve, suppression pool (F006)	Capable of opening and closing against 1.37 MPa differential pressure
Testable check valve equalizing valve (F026)	Open and/or close against full differential pressure of 8.12 MPa
Outboard check valve (F005)	Accessible during plant operation and capable of local testing
Turbine exhaust isolation valve (F039)	Opens and/or closes against 1.10 MPa differential pressure at a temperature of 170°C, physically located in the line on a horizontal run as close to the containment as practical
Isolation valve, steam warmup line (F048)	Opens and/or closes against differential pressure of 8.12 MPa
Condensate storage tank isolation valve (F001)	This valve isolates the condensate storage tank so that suction may be drawn from the suppression pool; valve must operate against a differential pressure of 1.37 MPa
Vacuum breaker check valves (F054 & F055)	Full flow and open with a minimum pressure drop (less than 3.92 kPa across the valves)
Steam inlet drain pot system isolation (F040 & F041)	These valves allow for drainage of the steam inlet drain pot and must operate against a differential pressure of 8.12 kPa
Steam inlet trip bypass valve (F058)	This valve bypasses the trap D008 and must operate against a differential pressure of 8.12 kPa
Pump test return valve (F009)	This valve allows water to be returned to the suppression pool during RCIC system test and must operate against a differential pressure of 9.65 MPa
Turbine exhaust check valve (F038)	Capable of with standing impact loads due to “flapping” during startup.

(5) Instrumentation – For instruments and control definition, refer to Subsection 7.4.1.1.

(6) Condensate Storage Requirements

Total reserve storage for RCIC and HPCF System is 570 m^3.

Table 5.4-2 Design Parameters for RCIC System Components (Continued)

(7) Piping RCIC Water Temperature
The maximum water temperature range for continuous system operation shall not exceed 60°C; however, due to potential short-term operation at higher temperatures, piping expansion calculations were based on 77°C.

(8) Turbine Exhaust Vertical Reactor Force
The turbine exhaust sparger is capable of withstanding a vertical pressure unbalance of 0.137 MPa. This pressure unbalance is due to turbine steam discharge below the suppression pool water level.

(9) Ambient Conditions	Relative Temperature	Humidity(%)
Normal plant operation	10 to 40°C	10 to 90

(10) Suction Strainer Sizing

The suppression pool suction shall be sized so that:

(a) Pump NPSH requirements are satisfied when strainer is blocked in accordance with RG 1.82 analysis methods.

Table 5.4-3 RHR Pump/Valve Logic

Valve Number	Valve Function	Normal Position	Automatic Logic or Permissives		
			Condition	Automatic Action	
C001 A,B,C	N/A	Stopped	Note A	Start	Automatic start also requires adequate bus power permissive and employs time delays as necessary to load standby power sources.
F001 A,B,C	Pump Suction Valves	Open			Permissives: To open requires F012 to be fully closed.
F012 A,B,C	Shutdown Suction Isolation Valves	Closed			Permissive: To open requires F001, F008, F018B, C, and F019B, C to be fully closed.
F004 A,B,C	Hx Tube Side Outlet Valves	Open	Note A	Open	
F013 A,B,C	Hx Bypass Valves	Closed	Note A	Close	
F010 A,B,C	Inboard Shutdown Cooling Suction Isolation	Closed	Note B	Close	To prevent the reactor from draining or filling.
F011 A,B,C	Outboard Shutdown Cooling Suction Isolation	Closed	Note B	Close	To prevent the reactor from draining or filling.
F008 A,B,C	S/P Return Valves	Closed	Note F Note G	Close Open	Permissive: To open requires F005 and F012 to be fully closed.
F021 A,B,C	Minimum Flow Valves	Open	Note C Note J	Open Close	
F005 A,B,C	Low Pressure Flooder Injection Valves	Closed	Note F Note G	Open Close	With low reactor pressure permissive of 3.01 MPaG.
F017 B,C	Drywell Spray Valves	Closed	Note D	Close	Permissive: To open requires high drywell pressure and F005 fully closed, or to open for test requires F018 fully closed.
F018 B,C	Drywell Spray Isolation Valves	Closed	Note H	Close	Permissive: To open requires high drywell pressure and F005 fully closed, or to open fully requires F017 fully closed.

Table 5.4-3 RHR Pump/Valve Logic (Continued)

Valve Number	Valve Function	Normal Position	Automatic Logic or Permissives		
			Condition	Automatic Action	
F019 B,C	Wetwell Spray Isolation Valves	Closed	Note A	Close	Permissive: To open requires F012 fully closed and either the absence of LOCA or F005 fully closed.
F006 A,B,C	Testable Check Valve	Closed			Permissive: To open for test requires F005 fully closed and F036, warmup valve, fully open.
C002	N/A	Run	Note A	Stop	
F029 A,B,C	Liquid Waste Flush Valve	Closed	Note E	Close	
F030 A,B,C	Liquid Waste Flush Valve	Closed	Note E	Close	

NOTES:

A. LOCA signal or high suppression pool temperature.

B. Low reactor water level (L3) or high vessel pressure or RHR equipment area high temperature trip.

C. Pump discharge pressure high and low loop flow signal.

D. LOCA condition as indicated by a not-fully-closed injection valve F005, or high suppression pool temperature.

E. Low Reactor water level (L3) or high drywell pressure.

F. LOCA signal of low reactor water level (L1) or high drywell pressure.

G. High suppression pool temperature.

H. LOCA condition as indicated by a not-fully-closed injection valve F005.

J. High loop flow signal.

Table 5.4-4 RHR Heat Exchanger Design and Performance Data

Number of units	3
Seismic	Category I design and analysis
Types of exchangers	Horizontal U-Tube/Shell
Maximum Pressure Primary side Secondary side	 3.43 MPaG 1.37 MPaG
Design Point Function	Reactor Shutdown
Primary side (tube side) performance data	
(1) Flow	954 m^3/h
(2) Inlet temperature	182°C maximum
(3) Allowable pressure drop (max)	0.069 MPa
(4) Type water	Suppression Pool or Reactor Water
(5) Fouling factor	$2.446 \times 10^{-5} m^2 h°C/kJ$
Secondary side (shell side) performance data	
(1) Flow	1200 m^3/h
(2) Inlet temperature	37.8°C
(3) Allowable pressure drop maximum	0.069 MPa
(4) Type water	Reactor Building Cooling
(5) Fouling factor	$2.446 \times 10^{-5} m^2 h°C/kJ$

Table 5.4-5 Component and Subsystem Relief Valves

MPL No.	Service	Relief Route*	Relief Pressure (MPaG)	Relief Flow (m^3/h)
C12-F004A-B	Condensate	B	1.37	
C12-F018	Condensate	B	1.37	
C41-F038A-B	SLC Liquid	C	10.76	
C41-F014	SLC Liquid	A	1.37	
E11-F028A-C	Reactor Water	A	3.43	
E11-F039A-C	Reactor Water	E	8.62	
E11-F042A-C	Reactor Water	A	1.37	
E11-F051A-C	Reactor Water	A	3.43	
E22-F020B-C	Condensate	A	1.37	2.3
E51-F017	Condensate	B	1.37	2.3
G31-F020	Reactor Water	G	10.00	
G31-F031A-B	Condensate	G	8.83	

* A—Suppression pool
B—Equipment drain sump
C—SLCS pump suction
D—Reactor vessel
E—Across a valve to same line
F—Floor drain sump
G—LCW collector tank

Table 5.4-6 Reactor Water Cleanup System Equipment Design Data

Pumps		
System Flow Rate (kg/h)	152,500	
Type	Vertical Sealless centrifugal pump	
Number Required	2 (One pump is required to be running at 100 % capacity)	
Capacity (% of CUW System flow each)	100	
Design Temperature (°C)	66	
Design pressure (MPaG)	10.65	
Discharge head at shutoff (m)	182	
Heat Exchangers	**Regenerative**	**Nonregenerative**
Number Required	1 (3 shells per unit)	2 (2 shells per unit)
Capacity (% CUW System flow each)	100	50
Shell design pressure (MPaG)	10.65	1.37
Shell design temperature (°C)	302	85
Tube design pressure (MPaG)	8.83	8.83
Tube design temperature (°C)	302	302
Type	Horizontal U-tube	Horizontal U-tube
Exchange Capacity (kJ/h) (per unit)	1.15×10^8	2.01×10^7
Filter-Demineralizers		
Type	pressure precoat	
Number Required	2 (One F/D train is required to be running at 100 % capacity)	
Capacity (% of CUW System flow each)	100	
Flow rate per unit (kg/h)	152,500	
Design Temperature (°C)	66	
Design pressure (MPaG)	10.65	
Linear velocity (m/h)	~5.0	
Differential Pressures (MPa)		
Clean	0.034	
Annunciate	0.17	
Backwash	0.21	
Containment Isolation Valves		
Closing time (s)	<30	
Maximum differential pressure (MPa)	8.62	

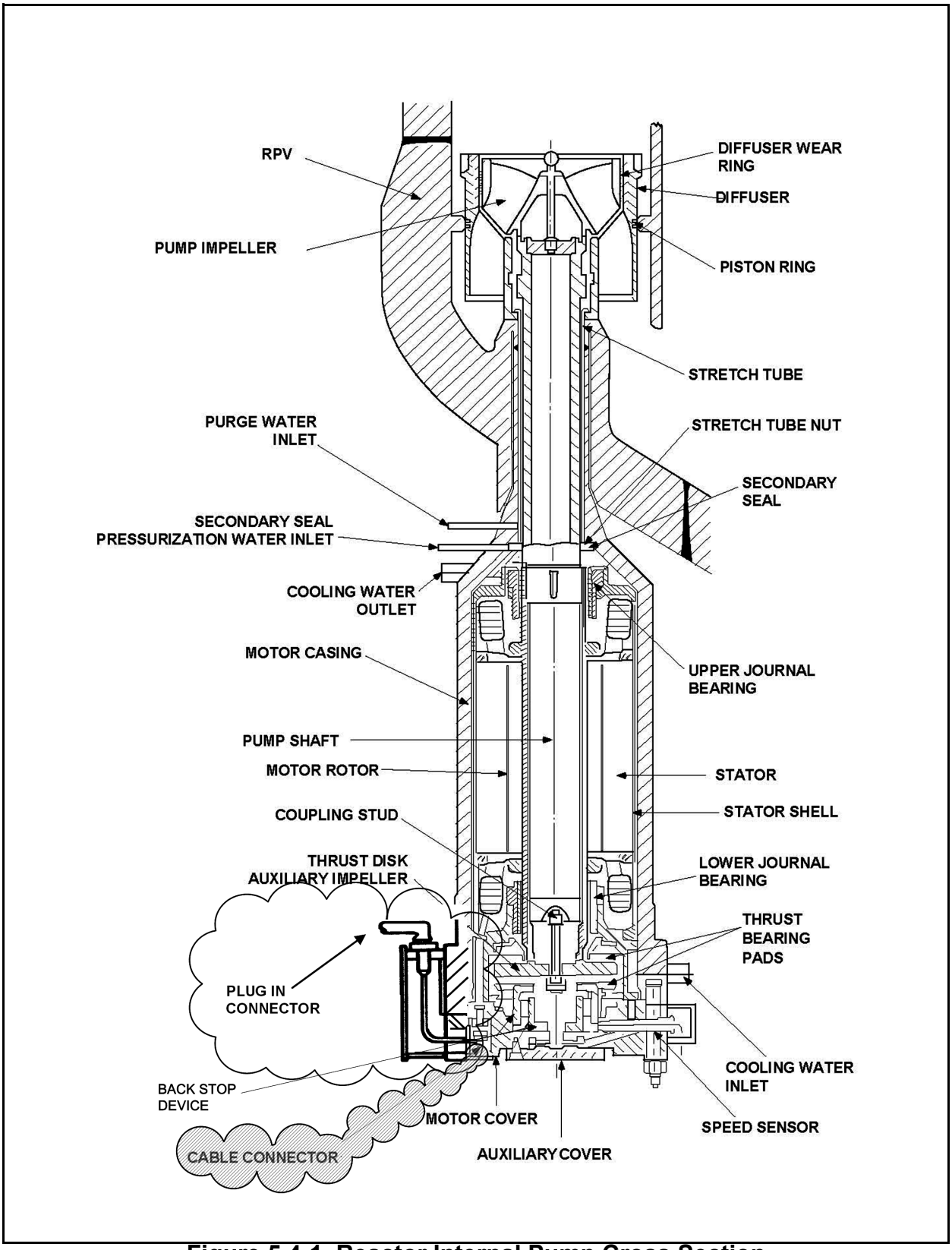

Figure 5.4-1 Reactor Internal Pump Cross Section

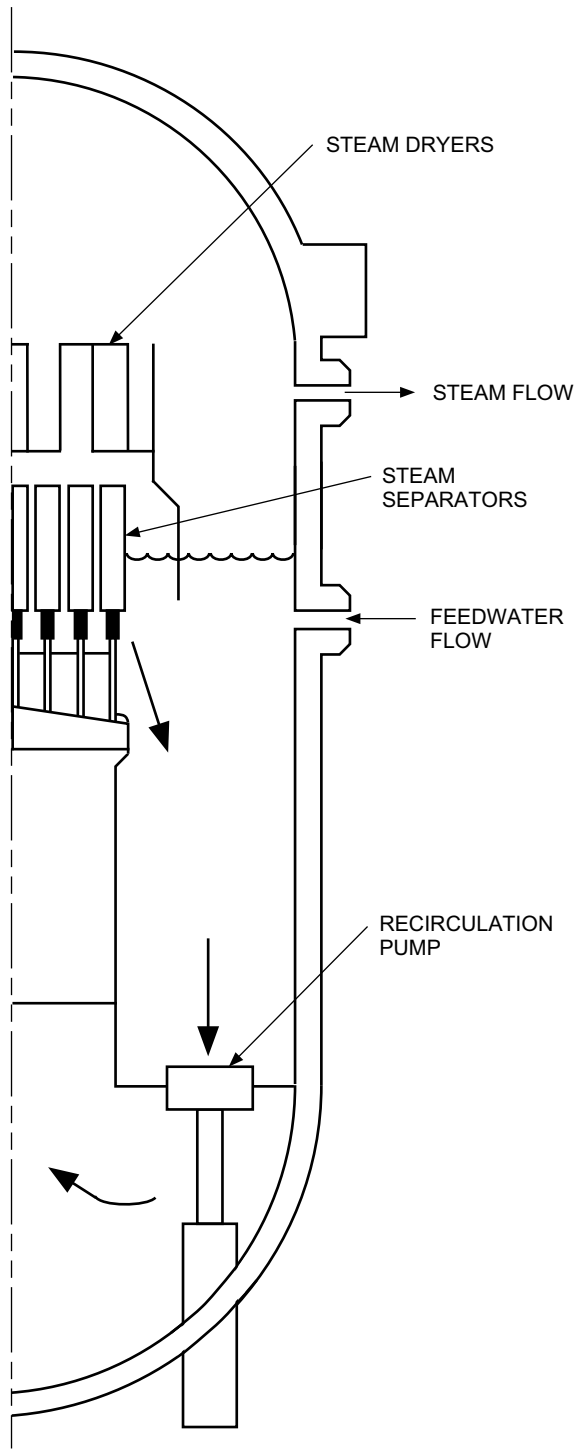

Figure 5.4-2 ABWR Recirculation Flow Path

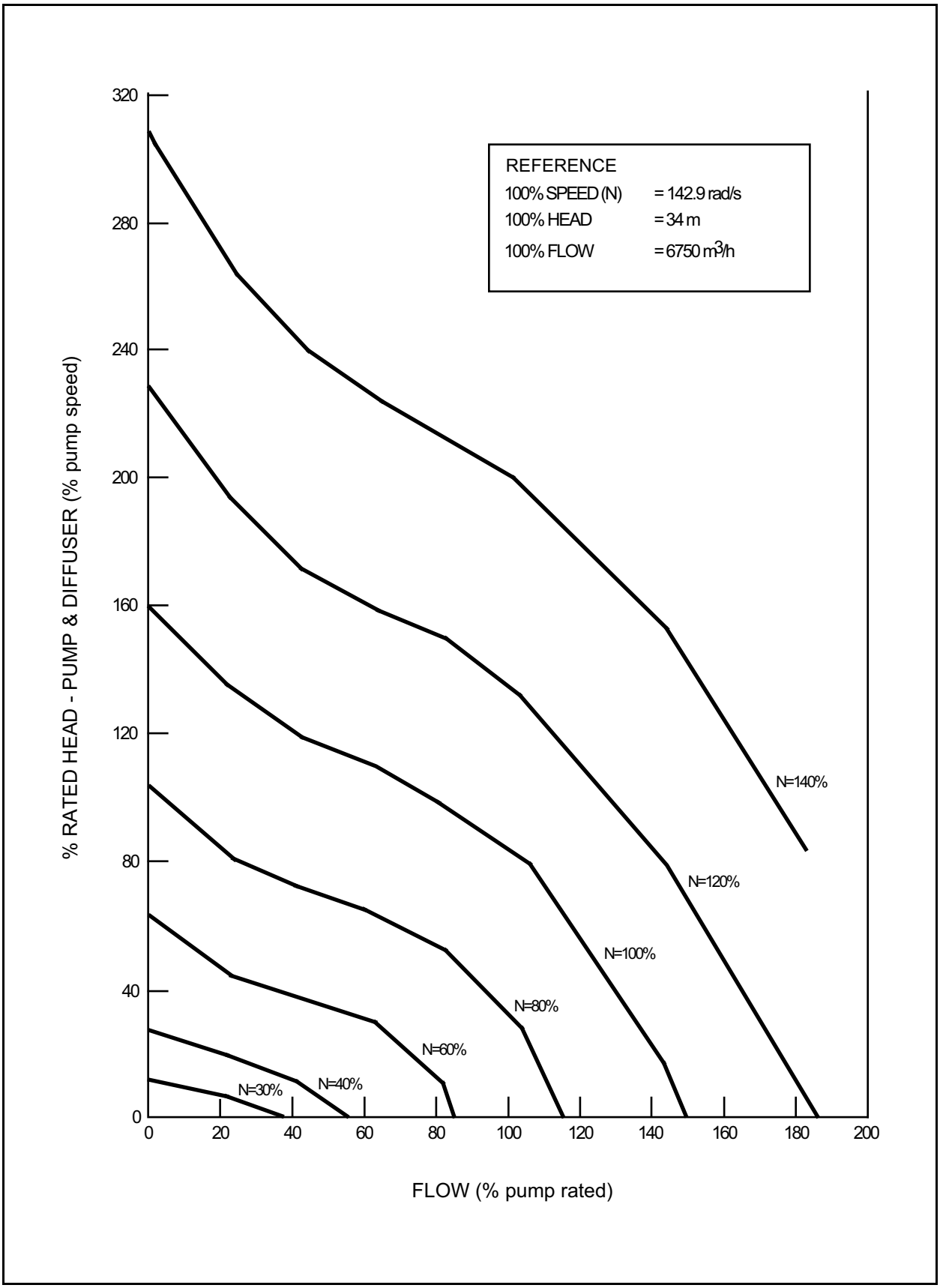

Figure 5.4-3 Reactor Internal Pump Performance Characteristics

The following figures are located in Chapter 21 :

Figure 5.4-4 Reactor Recirculation System P&ID (Sheets 1-2)

Figure 5.4-5 Reactor Recirculation System PFD

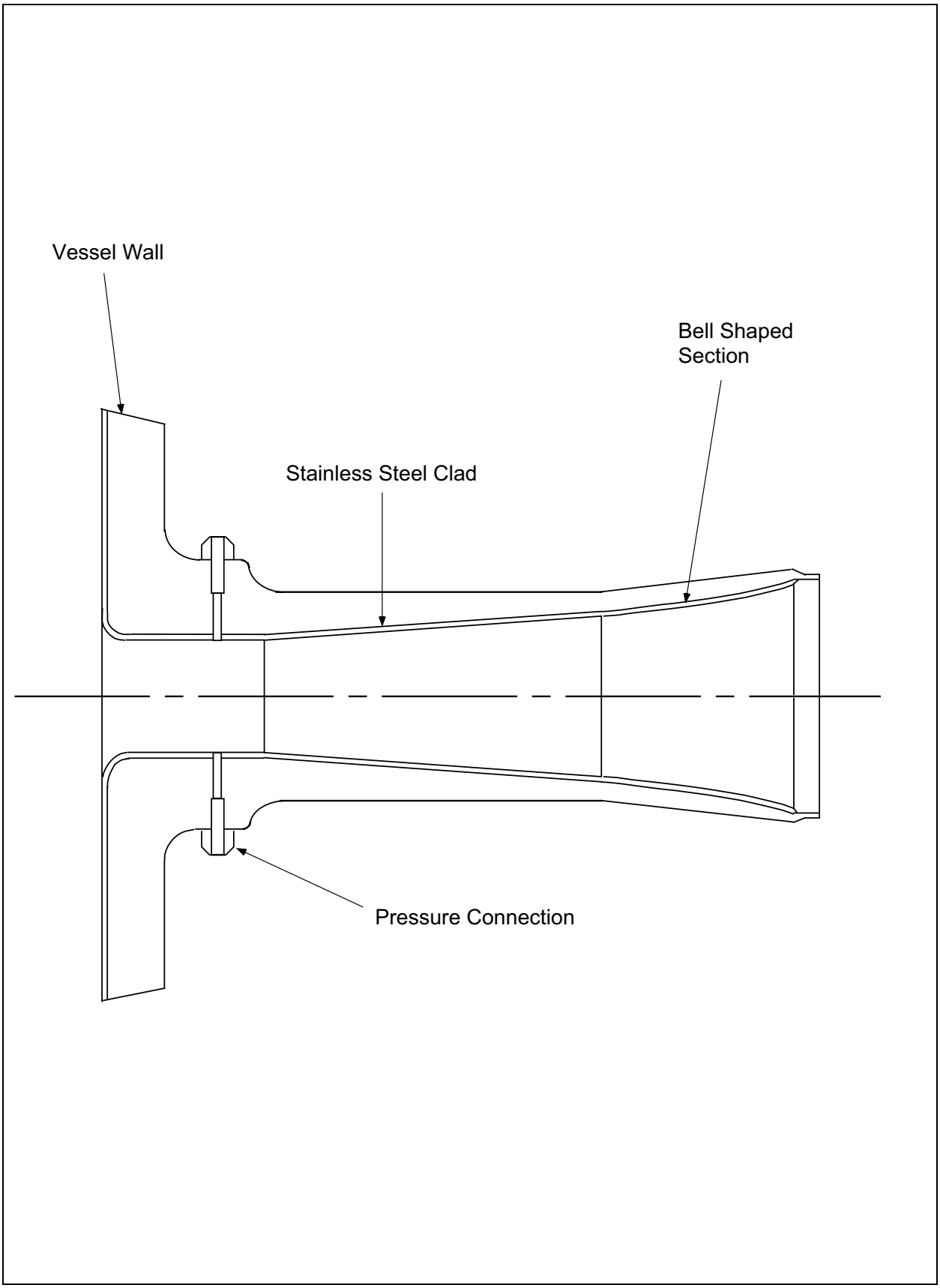

Figure 5.4-6 Main Steamline Flow Restrictor

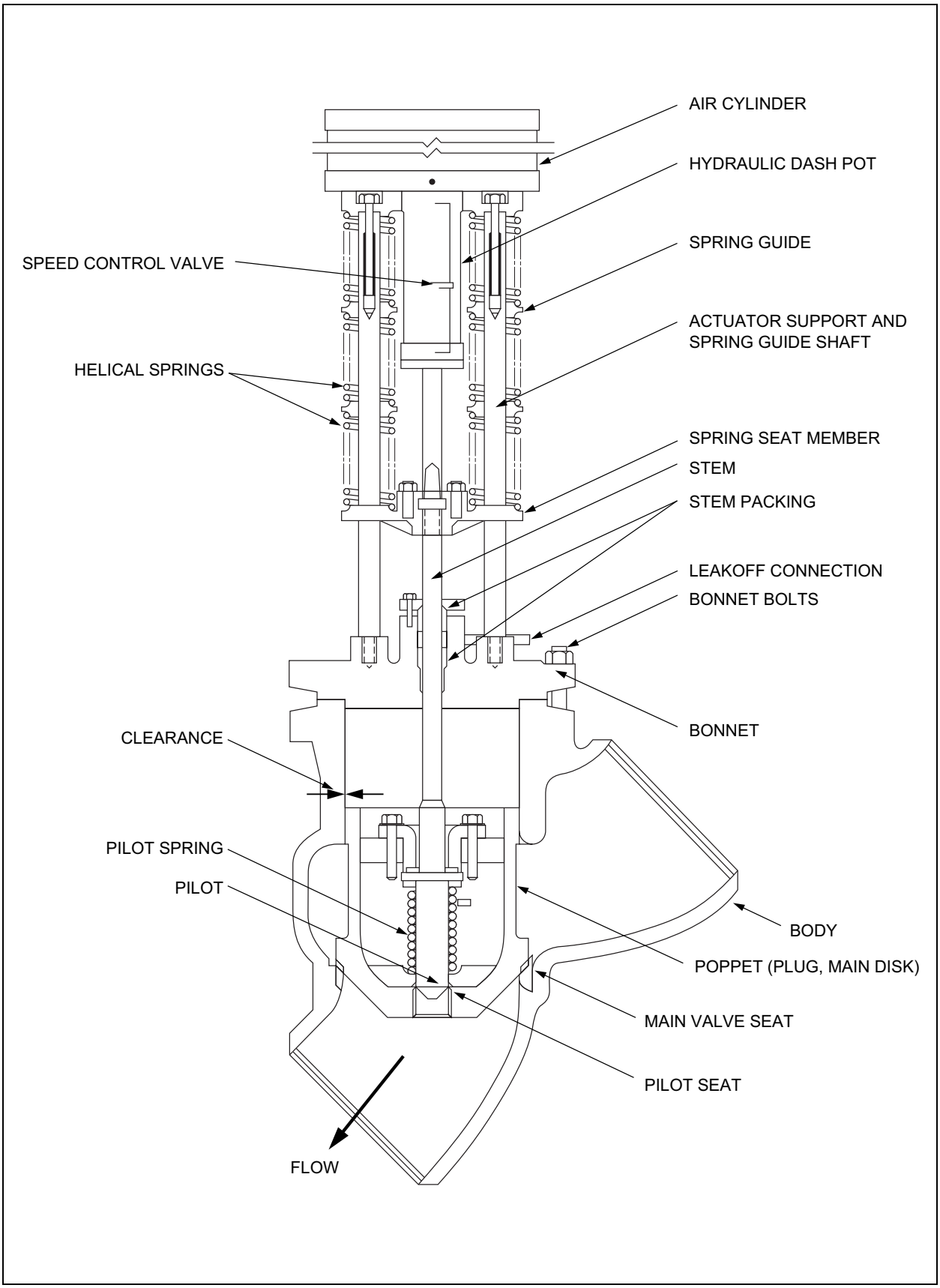

Figure 5.4-7 Main Steamline Isolation Valve

The following figures are located in Chapter 21:

Figure 5.4-8 Reactor Core Isolation Cooling System P&ID (Sheets 1-3)

Figure 5.4-9 Reactor Core Isolation Cooling System PFD (Sheets 1-2)

Figure 5.4-10 Residual Heat Removal System P&ID (Sheets 1-7)

Figure 5.4-11 Residual Heat Removal System PFD (Sheets 1-2)

Figure 5.4-12 Reactor Water Cleanup System P&ID (Sheets 1-4)

Figure 5.4-13 Reactor Water Cleanup System PFD (Sheets 1-2)

Figure 5.4-14 Reactor Water Cleanup System IBD (Sheets 1-11)