5.0 Reactor Coolant System and Connected Systems

5.1 Summary Description

The Reactor Coolant System (RCS) includes those systems and components which contain or transport fluids coming from or going to the reactor core. These systems form a major portion of the reactor coolant pressure boundary (RCPB). This chapter provides information regarding the RCS and pressure-containing appendages out to and including isolation valving. This grouping of components is defined as the RCPB.

The RCPB includes all pressure-containing components such as pressure vessels, piping, pumps, and valves, which are:

(1) Part of the RCS.

or

(2) Connected to the RCS up to and including any and all of the following:

(a) The outermost containment isolation valve in piping which penetrates the primary reactor containment.

(b) The second of the two valves normally closed during normal reactor operation in system piping which does not penetrate primary reactor containment.

(c) The RCS safety/relief valve (SRV) piping.

This chapter also deals with various subsystems which are closely allied to the RCPB (Section 5.4):

Pressure Relief System

The nuclear Pressure Relief System(PRS) protects the RCPB from damage due to overpressure by providing pressure-operated relief valves that can discharge steam from the nuclear system to the suppression pool. The PRS also acts to automatically depressurize the nuclear system in the event of a loss-of-coolant accident (LOCA) in which the Feedwater, Reactor Core Isolation Cooling (RCIC) and High Pressure Core Flooder (HPCF) Systems fail to maintain reactor vessel water level. Depressurization of the nuclear system allows the low pressure flooder systems to supply enough cooling water to adequately cool the fuel.

Subsection 5.2.5 establishes the limits on nuclear system leakage inside the drywell so that appropriate action can be taken before the integrity of the nuclear system process barrier is impaired.

The reactor vessel and appurtenances are described in Section 5.3. The major safety consideration for the reactor vessel is the ability of the vessel to function as a radioactive material barrier. Various combinations of loading are considered in the vessel design. The

vessel meets the requirements of applicable codes and criteria. The possibility of brittle fracture was considered, and suitable design, material selection, material surveillance activity, and operational limits were established that avoid conditions where brittle fracture was possible.

Reactor Recirculation System

The Reactor Recirculation System (RRS) provides coolant flow through the core. Adjustment of the core coolant flow rate changes reactor power output, thus providing a means of following plant load demand without adjusting control rods. The RRS is designed to provide a slow coastdown of flow so that fuel thermal limits cannot be exceeded as a result of recirculation system malfunctions. The reactor recirculation pumps are located inside the reactor vessel, thus eliminating large piping connections to the reactor vessel below the core and also eliminating the RRS piping.

The main steamline flow restrictors of the venturi-type are installed in each main steam nozzle on the reactor vessel inside the primary containment. The restrictors are designed to limit the loss of coolant resulting from a main steamline break inside or outside the primary containment. The coolant loss is limited so that reactor vessel water level remains above the top of the core during the time required for the main steamline isolation valves to close. This action protects the fuel barrier.

Two isolation valves are installed on each main steamline. One is located inside and the other outside the primary containment. If a main steamline break occurs inside the containment, closure of the isolation valve outside the primary containment seals the primary containment itself. The main steamline isolation valves (MSIVs) automatically isolate the RCPB when a pipe break occurs outside the containment. This action limits the loss of coolant and the release of radioactive materials from the nuclear system.

Reactor Core Isolation Cooling System

The Reactor Core Isolation Cooling (RCIC)System provides makeup water to the core during a reactor shutdown in which feedwater flow is not available. The system is started automatically upon receipt of a low reactor water level signal or manually by the operator. Water is pumped to the core by a turbine pump driven by reactor steam.

Residual Heat Removal System

The Residual Heat Removal (RHR) System includes a number of pumps and heat exchangers that can be used to cool the nuclear system under a variety of situations. During normal shutdown and reactor servicing, the RHR System removes residual and decay heat. The RHR System allows decay heat to be removed whenever the main heat sink (main condenser) is not available (i.e., hot standby). One mode of RHR operation allows the removal of heat from the primary containment following a LOCA. Another operational mode of the RHR System is low pressure flooder (LPFL).

The LPFL is an engineered safety feature for use during a postulated LOCA. Operation of the LPFL is presented in Section 6.3.

Reactor Water Cleanup System

The Reactor Water Cleanup (CUW) System recirculates a portion of reactor coolant through a filter-demineralizer to remove particulate and dissolved impurities with their associated corrosion and fission products from the reactor coolant. It also removes excess coolant from the reactor system under controlled conditions.

5.1.1 Schematic Flow Diagrams

Schematic flow diagrams (Figures 5.1-1 and 5.1-2) of the RCS show major components, principal pressures, temperatures, flow rates, and coolant volumes for normal steady-state operating conditions at rated power.

5.1.2 Piping and Instrumentation Diagrams

Piping and instrumentation diagrams (P&ID) covering the systems included within RCS and connected systems are presented as follows:

(1) Nuclear Boiler System (Figure 5.1-3)

(2) Main Steam (Figure 5.1-3, Sheets 2 & 3)

(3) Feedwater (Figure 5.1-3, Sheet 4)

(4) Recirculation System (Figure 5.4-4)

(5) Reactor Core Isolation Cooling System (Figure 5.4-8)

(6) Residual Heat Removal System (Figure 5.4-10)

(7) Reactor Water Cleanup System (Figure 5.4-12)

5.1.3 Elevation Drawings

The elevation drawings showing the principal dimensions of the reactor and connecting systems in relation to the containment are provided in Figures 1.2-2 and 1.2-3.

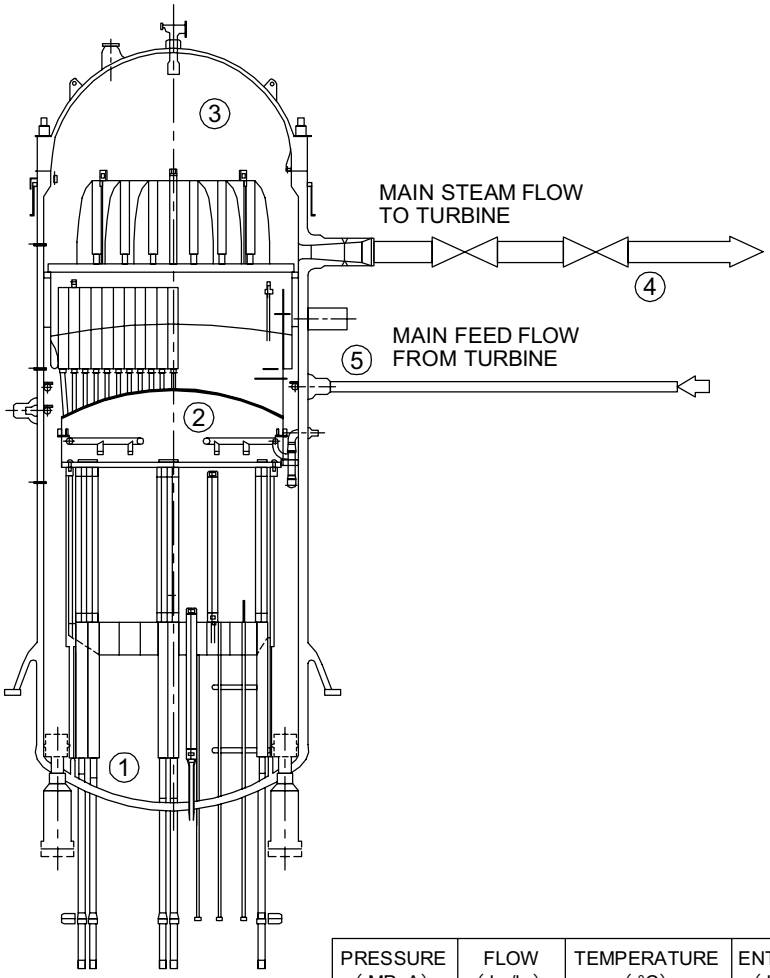

	PRESSURE (MPaA)	FLOW (kg/hr)	TEMPERATURE (°C)	ENTHALPY (kJ/kg)
1 CORE INLET	7.4	52.2×10^6	278	1227
2 CORE OUTLET	7.2	52.2×10^6	288	1500
3 SEPARATOR OUTLET (STEAM DOME)	7.2	7.65×10^6	287	2769
4 STEAMLINE (2ND ISOLATION VALVE)	6.9	7.65×10^6	285	2769
5 FEEDWATER INLET (INCLUDES CLEANUP RETURN FLOW)	7.3	7.78×10^6	216	926

Figure 5.1-1 Rated Operating Conditions of the ABWR

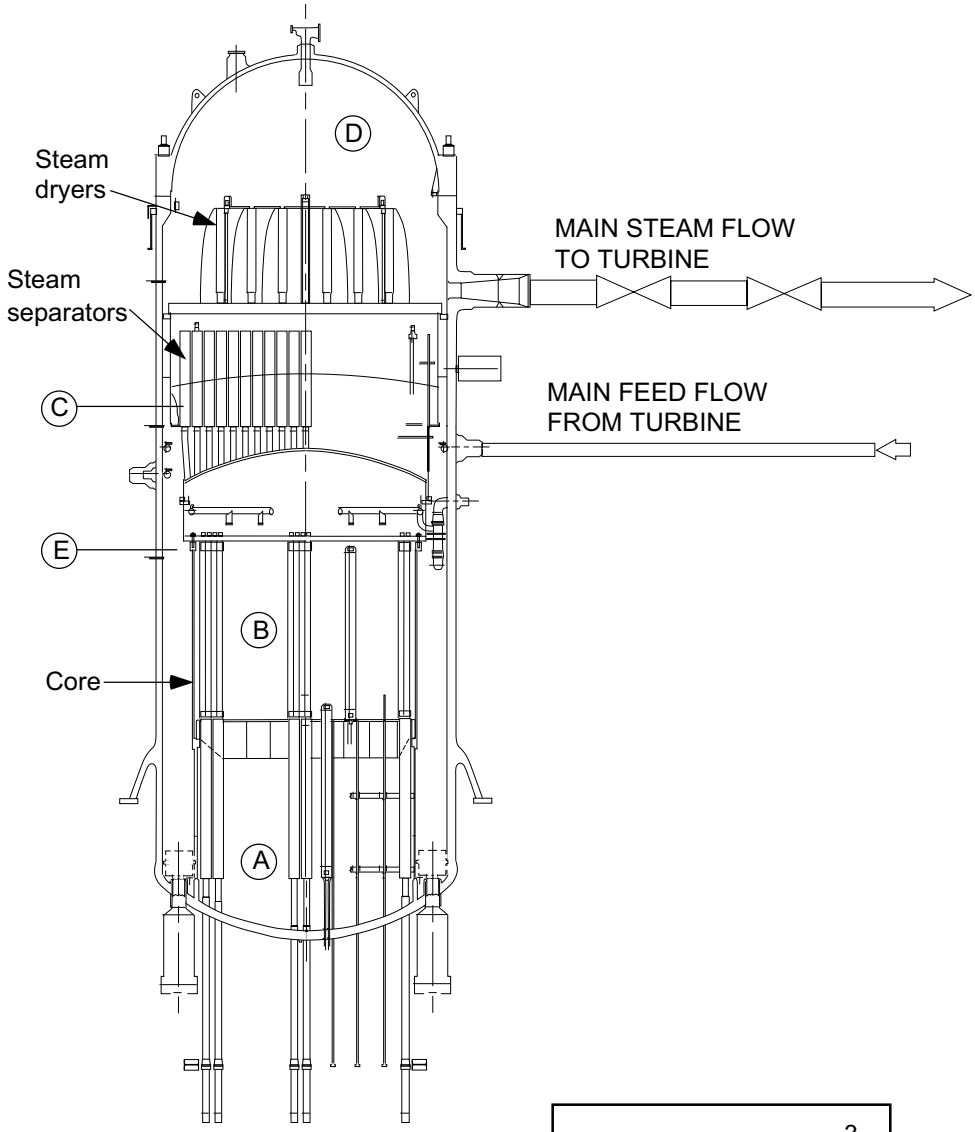

	VOLUME OF FLUID (M^3)
A LOWER PLENUM	102
B CORE	70
C UPPER PLENUM AND SEPARATORS	60
D DOME (ABOVE NORMAL WATER LEVEL)	236
E DOWNCOMER REGION	214

Figure 5.1-2 Coolant Volumes of the ABWR

The following figure is located in Chapter 21 :

Figure 5.1-3 Nuclear Boiler System P&ID (Sheets 1–11)