2.15 Structures and Servicing Systems

2.15.1 Foundation Work

No entry. Covered in Section 2.15.10.

2.15.2 Turbine Pedestal

No entry. Covered in Section 2.15.11.

2.15.3 Cranes and Hoists

Design Description

Cranes and Hoists are used for maintenance and refueling tasks.

During refueling/servicing, the Reactor Building (R/B) crane handles the shield plugs, drywell and reactor vessel heads, and the steam dryer/separators. The minimum crane coverage includes the R/B refueling floor laydown area, and the R/B equipment storage pit. During plant operation, the crane handles new fuel shipping containers and the spent fuel shipping casks. For these activities, the minimum crane coverage includes the new fuel vault, the R/B equipment hatches, and the spent fuel cask loading and washdown pits.

The upper drywell hoists are used during outages to service valves and equipment inside the upper drywell.

The lower drywell hoists service valves and equipment inside the lower drywell during outages.

The Cranes and Hoists are classified as non-safety-related.

The R/B crane is interlocked to prevent movement of heavy loads over the spent fuel storage portion of the spent fuel storage pool. The hoisting and braking system of the R/B crane are redundant.

The R/B crane has a lifting capacity greater than or equal to the heaviest expected load.

The upper drywell hoists and lower drywell hoists are classified as Seismic Category I.

Inspections, Tests, Analyses and Acceptance Criteria

Table 2.15.3 provides a definition of the inspections, tests, and/or analyses, together with associated acceptance criteria, which will be undertaken for the Cranes and Hoists.

Table 2.15.3 Cranes and Hoists

Inspections, Tests, Analyses and Acceptance Criteria		
Design Commitment	**Inspections, Tests, Analyses**	**Acceptance Criteria**
1. The basic configuration of the Cranes and Hoists System is described in Section 2.15.3.	1. Inspection of the as-built system will be conducted.	1. The as-built Cranes and Hoists System conforms with the description in Section 2.15.3
2. The R/B crane is interlocked to prevent movement of heavy loads over the spent fuel storage portion of the spent fuel storage pool.	2. Tests will be conducted of the as-built R/B crane movement using a heavy load.	2. The R/B crane interlock prevents the carrying of a load greater than one fuel assembly and its associated handling devices over the spent fuel storage portion of the spent fuel storage pool.
3. The R/B crane has a lifting capacity greater than or equal to the heaviest expected load.	3. Analyses will be performed to determine the heaviest expected load. Load tests of the as-built R/B crane will be conducted.	3. The rated load for the as-built R/B crane equals or exceeds the heaviest expected load. The R/B crane carries: a. A static load at 125% of rated load. b. An operational load at 100% of rated load.

2.15.4 Elevators

No entry for this system.

2.15.5 Heating, Ventilating and Air Conditioning Systems

Design Description

Control Room Habitability Area HVAC System

The Control Room Habitability Area (CRHA) Heating, Ventilating and Air Conditioning (HVAC) System provides a controlled environment for personnel comfort and safety, and for the operation of equipment in the main control area envelope (MCAE). The system consists of two (redundant) divisions. Each division consists of an air conditioning unit with two supply fans, two exhaust fans, and an emergency filtration unit with two circulating fans. The emergency filtration unit will have at least 99% removal efficiency for all forms of iodine (elemental, organic, particulate, and hydrogen iodide) from the influent system.

Toxic gas monitors may be required in the outside air intakes of the CRHA HVAC System; these sensors are not in the Certified Design.

Figure 2.15.5a shows the basic configuration and scope for the CRHA HVAC System.

The CRHA HVAC System is classified as safety-related.

The CRHA HVAC System operates in the following modes:

(1) Normal operating.

(2) High radiation.

(3) Outside smoke.

(4) Smoke removal.

Normal Operating Mode

In the normal operating mode, one air conditioning unit, one supply fan, and one exhaust fan operate in each division. The exhaust fan automatically starts when the supply fan is started.

The MCAE is maintained at a minimum pressure of 3.2 mm water gauge above the outside atmosphere.

High Radiation Mode

On receipt of a Process Radiation Monitoring (PRM) System signal for high radiation in the outside air intake of the operating division, the normal outside air intake dampers close, the exhaust air dampers close, the exhaust fan stops, the minimum outside air intake dampers open, and one fan of the emergency filtration unit starts.

In the high radiation mode, a positive pressure of at least 3.2 mm water gauge is maintained in the MCAE relative to the outside atmosphere. Each emergency filtration unit treats a

mixture of MCAE recirculated air and outside makeup air to maintain the positive pressure with not more than 3400 m^3 per hour (@ one atmosphere absolute pressure, 0°C) of outside air.

The redundant division of the CRHA HVAC System starts on a low flow signal from the operating emergency filtration unit. The redundant division is connected to an outside air intake, which is separated from the other intake by a minimum of 50m.

Outside Smoke Mode

When smoke detection sensors in the operating outside air intake detect smoke, a signal will initiate MCAE air recirculation by isolating the outside air intake, closing the exhaust damper and stopping the exhaust fan.

Smoke Removal Mode

The smoke removal mode is manually initiated by closing the recirculation damper and starting both exhaust fans at high speed in conjunction with a supply fan.

The remaining discussion in this section is not mode-specific and applies (unless stated otherwise) to the entire CRHA HVAC System.

MCAE temperature is maintained between 21°C and 26°C, with a relative humidity between 10% and 60%, except when in the smoke removal mode.

The CRHA HVAC System is classified as Seismic Category I. The CRHA HVAC System is located in the Control Building.

Each of the two CRHA HVAC System divisions, with the exception of the motor operated isolation dampers, is powered from the respective Class 1E division as shown on Figure 2.15.5a. Each pair of motor operated isolation dampers in series is powered from two independent Class 1E divisions (one damper is powered from Class 1E division II and the other damper is from Class 1E division III). In the CRHA HVAC System, independence is provided between Class 1E divisions, and also between the Class 1E divisions and non-Class 1E equipment.

Each mechanical division of the CRHA HVAC System (Divisions B and C) is physically separated from the other division, except for the common ducts in the MCAE.

Fire dampers with fusible links in HVAC duct work close under air flow conditions.

The CRHA HVAC System has the following displays and controls in the main control room:

(1) Controls and status indication for the active safety-related components shown on Figure 2.15.5a.

(2) Parameter displays for the instruments shown on Figure 2.15.5a, except for the smoke detectors.

Interface Requirements

Toxic gas monitors will be located in the outside air intakes of the CRHA HVAC System, if the site is adjacent to toxic gas sources with the potential for releases of significance to plant operating personnel in the MCAE. These monitors should have the following requirements:

(1) Be located in the outside air intakes of each division of the CRHA HVAC System.

(2) Be capable of detecting toxic gas concentrations at which personnel protective actions must be initiated.

Control Building Safety-Related Equipment Area HVAC System

The Control Building Safety-Related Equipment Area (CBSREA)HVAC System provides a controlled temperature environment for the operation of equipment in the Control Building, excluding the MCAE. The system also limits hydrogen concentration in the battery rooms. The CBSREA HVAC System consists of three independent safety-related divisions, each serving a designated area. Each division consists of an air conditioning unit with two supply fans, and two exhaust fans.

The CBSREA HVAC System also ventilates rooms that contain non-safety-related equipment and provides supplemental cooling in these rooms using non-safety-related fan coil units (FCUs).

The basic system configuration and scope for the CBSREA HVAC System is shown on Figures 2.15.5b, 2.15.5c and 2.15.5d.

The CBSREA HVAC System is classified as safety-related except for the FCUs.

The CBSREA HVAC System operates in the following modes:

(1) Normal operating mode, including accident conditions.

(2) Smoke removal mode.

Normal Operating Mode

In the normal operating mode, one air conditioning unit, one supply fan, and one exhaust fan of each division operate. The exhaust fan automatically starts when the supply fan is started.

In the areas served by the CBSREA HVAC System, the temperature is maintained below 40°C.

Hydrogen concentration is maintained at less than 2% by volume in the battery rooms.

Smoke Removal Mode

The smoke removal mode is manually initiated by closing the recirculation damper, and starting both exhaust fans in conjunction with a supply fan to allow outside air purging of the affected Control Building area. The normal operating mode is used to remove smoke from the battery rooms.

The remaining discussion in this section is not mode-specific and applies (unless stated otherwise) to the entire CBSREA HVAC System.

The CBSREA HVAC System is classified as Seismic Category I, except for the non-safety-related fan coil units. The CBSREA HVAC System is located in the Control Building.

Each of the three CBSREA HVAC System divisions is powered from the respective Class 1E division as shown on Figures 2.15.5b, 2.15.5c and 2.15.5d. In the CBSREA HVAC System, independence is provided between Class 1E divisions, and also between the Class 1E divisions and non-Class 1E equipment.

Each mechanical division of the CBSREA HVAC System (Divisions A, B and C) is physically separated from the other divisions. CBSREA HVAC System Division B duct penetrations of Division IV firewalls are provided with fire dampers.

Fire dampers with fusible links in HVAC duct work close under air flow conditions.

The CBSREA HVAC System has the following displays and controls in the main control room:

(1) Controls and status indication for the active safety-related components shown on Figures 2.15.5b, 2.15.5c and 2.15.5d.

(2) Parameter displays for the instruments shown on Figures 2.15.5b, 2.15.5c and 2.15.5d.

Reactor Building HVAC System

The Reactor Building (R/B) HVAC System provides a controlled environment for the operation of equipment in the Reactor Building.

The Reactor Building HVAC System consists of three independent safety-related divisions. Each division is composed of the following systems:

(1) R/B Safety-Related Equipment HVAC System.

(2) R/B Safety-Related Electrical Equipment HVAC System.

(3) R/B Safety-Related Diesel Generator HVAC System.

The Reactor Building HVAC System includes the following non-safety-related systems:

(1) R/B Secondary Containment HVAC System.

(2) R/B Primary Containment Supply/Exhaust System.

(3) R/B Main Steam Tunnel HVAC System.

(4) R/B Non-Safety-Related Equipment HVAC System.

(5) R/B Reactor Internal Pump (RIP) Adjustable Speed Drive (ASD) Control Panel HVAC System

R/B Safety-Related Equipment HVAC System

The R/B Safety-Related Equipment HVAC System provides cooling of safety-related equipment areas, and consists of independent fan coil units. Figure 2.15.5e shows the basic system configuration and scope.

The R/B Safety-Related Equipment HVAC System is classified as safety-related.

The Residual Heat Removal (RHR) System, High Pressure Core Flooder (HPCF) System and Reactor Core Isolation Cooling (RCIC) System pump room FCUs are automatically initiated upon startup of their respective room process pump. The Containment Atmospheric Monitoring System (CAMS) and Standby Gas Treatment System (SGTS) room FCUs are automatically initiated upon isolation of the Reactor Building Secondary Containment HVAC System.

The temperature in the safety-related equipment areas is maintained below 40°C, except for the RHR, HPCF, and RCIC pump rooms, which are maintained below 66°C during pump operation.

The R/B Safety-Related Equipment HVAC System is classified as Seismic Category I. The R/B Safety-Related Equipment HVAC System is located in the Reactor Building.

Each of the three divisions of the R/B Safety-Related Equipment HVAC System is powered from the respective Class 1E division as shown on Figure 2.15.5e. In the R/B Safety-Related Equipment HVAC System, independence is provided between Class 1E divisions, and also between the Class 1E divisions and non-Class 1E equipment.

Each mechanical division (Divisions A, B, C) of the R/B Safety-Related Equipment HVAC System is physically separated from the other divisions.

The R/B Safety-Related Equipment HVAC System has the following displays and controls in the main control room:

(1) Controls and status indication for the FCUs shown on Figure 2.15.5e.

The safety-related electrical equipment shown on Figure 2.15.5e located in the Reactor Building is qualified for a harsh environment.

R/B Safety-Related Electrical Equipment HVAC System

The R/B Safety-Related Electrical Equipment HVAC System provides cooling of safety-related electrical equipment areas, and consists of three independent divisions. Each division consists of an air conditioning unit with two supply fans, and two exhaust fans. Figures 2.15.5f, 2.15.5g, and 2.15.5h show the basic system configuration and scope.

The R/B Safety-Related Electrical Equipment HVAC System is classified as safety-related.

Normal Operating Mode

In the normal operating mode, the air conditioning unit, one supply fan, and one exhaust fan of each division operate. The exhaust fan automatically starts when the supply fan is started.

In the areas served by the R/B Safety-Related Electrical Equipment HVAC System temperature is maintained below 40°C, except in the diesel generator (DG) engine rooms during DG operation.

Smoke Removal Mode

The smoke removal mode is manually initiated by closing the recirculation damper, stopping the exhaust fan, opening the exhaust fan bypass damper to allow outside air purging of the affected area, and starting the smoke removal fan in conjunction with the supply fan. The normal operating mode is used to remove smoke from the DG day tank rooms.

The R/B Safety-Related Electrical Equipment HVAC System is classified as Seismic Category I. The R/B Safety-Related Electrical Equipment HVAC System is located in the Reactor Building.

Each of the three divisions of the R/B Safety-Related Electrical Equipment HVAC System is powered from the respective Class 1E division as shown on Figures 2.15.5f, 2.15.5g, and 2.15.5h. In the R/B Safety-Related Electrical Equipment HVAC System, independence is provided between Class 1E divisions, and also between the Class 1E divisions and non-Class 1E equipment.

Each mechanical division of the R/B Safety-Related Electrical Equipment HVAC System (Divisions A, B, C) is physically separated from the other divisions.

Fire dampers with fusible links in HVAC duct work close under air flow conditions.

The R/B Safety-Related Electrical Equipment HVAC System has the following displays and controls in the main control rooms:

(1) Controls and status indication for the active safety-related components shown on Figures 2.15.5f, 2.15.5g, and 2.15.5h.

(2) Parameter displays for the instruments shown on Figures 2.15.5f, 2.15.5g and 2.15.5h.

R/B Safety-Related Diesel Generator HVAC System

The R/B Safety-Related DG HVAC System provides ventilation for the DG rooms when the DGs operate, and consists of three independent divisions. Each division consists of a filter unit and two supply fans. Figure 2.15.5i shows the basic system configuration and scope.

The R/B Safety-Related DG HVAC System is classified as safety-related.

On receipt of a DG start signal, both DG supply fans start. When the DG is operating, the R/B Safety-Related DG HVAC System and the R/B Safety-Related Electrical Equipment HVAC System maintain the temperature below 60°C.

The R/B Safety-Related DG HVAC System is classified as Seismic Category I. The R/B Safety-Related DG HVAC System is located in the Reactor Building.

Each of the three divisions of the R/B Safety-Related DG HVAC System is powered from the respective Class 1E division as shown on Figure 2.15.5i. In the R/B Safety-Related DG HVAC System, independence is provided between Class 1E divisions, and also between the Class 1E divisions and non-Class 1E equipment.

Each mechanical division of the R/B Safety-Related DG HVAC System (Divisions A, B, C) is physically separated from the other divisions.

The R/B Safety-Related DG HVAC System has the following displays and controls in the main control room:

(1) Controls and status indication for the active safety-related components shown on Figure 2.15.5i.

R/B Secondary Containment HVAC System

The R/B Secondary Containment HVAC System provides heating and cooling for the secondary containment. Figure 2.15.5j shows the basic system configuration and scope.

Except for the secondary containment isolation dampers, the R/B Secondary Containment HVAC System is classified as non-safety-related.

Normal Operating Mode

In the normal operating mode, two supply fans and two exhaust fans operate. The supply fans operate only when the exhaust fans are operating.

The R/B Secondary Containment HVAC System maintains a negative pressure in the secondary containment relative to the outside atmosphere.

The R/B Secondary Containment HVAC System isolation dampers are closed upon receipt of an isolation signal from the Leak Detection System (LDS) or a signal indicating loss of secondary containment supply and exhaust fans.

Smoke Removal Mode

The smoke removal mode is manually initiated by starting the standby exhaust and supply fans, opening the exhaust filter unit bypass dampers, and partially closing exhaust dampers for divisions not affected by fire.

The R/B Secondary Containment HVAC System penetrations of secondary containment and isolation dampers are classified as Seismic Category I. The R/B Secondary Containment HVAC System is located in the Reactor Building, except for some of the R/B secondary containment HVAC supply and exhaust air components which are located in the Turbine Building.

Each R/B Secondary Containment HVAC System isolation damper requiring electrical power is powered from the Class 1E division, as shown on Figure 2.15.5j. In the R/B Secondary Containment HVAC System, independence is provided between Class 1E divisions, and also between Class 1E divisions and non-Class 1E equipment.

Fire dampers with fusible links in HVAC duct work close under air flow conditions.

The R/B Secondary Containment HVAC System has the following displays and controls in the main control room:

(1) Control and status indication for the active components shown on Figure 2.15.5j.

(2) Parameter displays for the instruments shown on Figure 2.15.5j.

The exhaust duct secondary containment isolation dampers are located in the secondary containment and qualified for a harsh environment.

The pneumatically-operated secondary containment isolation dampers, shown on Figure 2.15.5j, fail to the closed position in the event of loss of pneumatic pressure or loss of electrical power to the valve actuating solenoids.

R/B Primary Containment Supply/Exhaust System

The R/B Primary Containment Supply/Exhaust System removes inert atmosphere and provides air for primary containment prior to personnel entry, and consists of a supply fan, a filter unit, and an exhaust fan as shown on Figure 2.15.5j.

The R/B Primary Containment Supply/Exhaust System is classified as non-safety-related. The R/B Primary Containment Supply/Exhaust System is located in the secondary containment

R/B Main Steam Tunnel HVAC System

The R/B Main Steam Tunnel HVAC System provides cooling to the main steam tunnel and consists of two FCUs. Each FCU has two fans. The FCUs are started manually.

The R/B Main Steam Tunnel HVAC System is classified as non-safety-related. The R/B Main Steam Tunnel HVAC System is located in the Reactor Building.

R/B Non-Safety-Related Equipment HVAC System

The R/B Non-Safety-Related Equipment HVAC System provides cooling to the non-safety-related equipment rooms. There are six air handling units in the system. Each consists of a cooling coil, fan(s), and filter, as required.

The R/B Non-Safety-Related Equipment HVAC System is classified as non-safety-related, and is located in the Reactor Building.

Reactor Internal Pump ASD HVAC System

The Reactor Internal Pump ASD HVAC System provides cooling to the RIP ASD power panels. The system consists of a two recirculating air conditioning units with cooling coils and four supply fans.

The RIP ASD HVAC System is classified as non-safety-related, and is located in the Reactor Building.

Turbine Island HVAC System

The Turbine Island HVAC System provides heating, cooling, and ventilation for the Turbine Island. The Turbine Island HVAC System consists of the following non-safety-related systems.

(1) Turbine Building (T/B) HVAC System.

(2) Electrical Building (E/B) HVAC System.

Turbine Building (T/B) HVAC System

The T/B HVAC System provides cooling and ventilation for the Turbine Building. The T/B HVAC System consists of:

(1) T/B supply system with an air conditioning unit and three supply fans.

(2) T/B exhaust system with three exhaust fans.

(3) T/B compartment exhaust system with two exhaust fans.

(4) T/B lube oil area exhaust system with two fans.

(5) T/B unit coolers and electric unit heaters.

The T/B HVAC System is classified as non-safety-related. The T/B HVAC System is located in the Turbine Building.

Electrical Building (E/B) HVAC System

The E/B HVAC System provides cooling and ventilation for the electrical equipment rooms. The system consists of two air conditioning units, supply fans, two exhaust fans, unit coolers and electric unit heaters.

The E/B HVAC System is classified as non-safety-related. The E/B HVAC System is located in the Electrical Building of the Turbine Island.

Radwaste Building HVAC System

The Radwaste Building HVAC System provides a controlled environment for personnel comfort and safety for the Radwaste Building areas. The system consists of:

(1) An air conditioning unit and two supply fans for the Radwaste Building control room

(2) An air conditioning unit with, two supply fans, and three exhaust fans for the process areas of the Radwaste Building.

The Radwaste Building HVAC System is classified as non-safety-related, and is located in the Radwaste Building.

Service Building HVAC System

The Service Building (S/B) HVAC System provides controlled environment for personnel comfort in the S/B.

The S/B HVAC System consists of two non-safety-related systems:

(1) Clean Area HVAC System.

(2) Controlled Area HVAC System.

The S/B HVAC System is classified as non-safety-related, and is located in the Service Building.

Clean Area HVAC System

The Clean Area HVAC System provides a controlled environment for personnel comfort and safety in the Clean Area for the duration of a design basis accident. The system consists of an air conditioning unit with two supply fans, two exhaust fans, and an emergency filtration unit with two circulating fans. The emergency filtration unit has at least 95% removal efficiency for all forms of iodine (elemental, organic, particulate, and hydrogen iodide) from the influent system.

Toxic gas monitors may be required in the outside air intake of the Clean Area HVAC System; these sensors are not in the Certified Design.

The Clean Area HVAC System is classified as non-safety-related. The Clean Area HVAC System is located in the S/B. The Clean Area HVAC System of the S/B serves the Technical Support Center (TSC) the Operational Support Center (OSC) and other clean areas inside the S/B.

On receipt of a signal from the TSC or main control room (MCR), the normal air intake damper closes, the minimum outside air intake damper opens and the ventilation air for the Clean Area is routed through the emergency filtration unit.

In the high radiation mode, a positive pressure is maintained in the Clean Area relative to the outside atmosphere.

Interface Requirements

Toxic gas monitors will be located in the outside air intakes of the Clean Area HVAC System, if the site is adjacent to toxic gas sources with the potential for releases of significance to plant operating personnel in the Clean Area. These monitors shall have the following requirements:

(1) Be located in the outside air intake of the Clean Area HVAC System.

(2) Be capable of detecting toxic gas concentrations at which personnel protective actions must be initiated.

Controlled Area HVAC System

The Controlled Area HVAC System serves the controlled access area, excluding the clean areas, and it consists of two exhaust fans. The Controlled Area HVAC System obtains its supply air from the Clean Area HVAC System. The Controlled Area HVAC System is located in the Service Building.

Inspections, Tests, Analyses and Acceptance Criteria

For portions of the CRHA HVAC system within the Certified Design, Table 2.15.5a provides a definition of the inspections, tests, and/or analyses, together with associated acceptance criteria, which will be undertaken for the CRHA HVAC Systems.

Table 2.15.5b provides a definition of the inspections, tests and/or analyses, together with associated acceptance criteria which will be under taken for the Control Building Safety-Related Equipment Area HVAC System.

Table 2.15.5c provides a definition of the inspections, tests, and/or analyses, together with associated acceptance criteria, which will be undertaken for the Reactor Building Safety-Related Equipment HVAC System.

Table 2.15.5d provides a definition of the inspections, tests, and/or analyses, together with associated acceptance criteria, which will be undertaken for the Reactor Building Safety-Related Electrical Equipment HVAC System.

Table 2.15.5e provides a definition of the inspections, tests, and/or analyses, together with associated acceptance criteria, which will be undertaken for the Reactor Building Safety-Related DG HVAC System.

Table 2.15.5f provides a definition of the inspections, tests, and/or analyses, together with associated acceptance criteria, which will be undertaken for the Reactor Building Secondary Containment HVAC System.

Table 2.15.5g provides a definition of the inspections, tests, and/or analyses, together with associated acceptance criteria, which will be undertaken for the Reactor Building Primary Containment Supply/Exhaust System.

Table 2.15.5h provides a definition of the inspections, tests, and/or analyses, together with associated acceptance criteria, which will be undertaken for the Reactor Building Main Steam Tunnel HVAC System.

Table 2.15.5i provides a definition of the inspections, tests, and/or analyses, together with associated acceptance criteria, which will be undertaken for the Reactor Building Non-Safety-Related Equipment HVAC System.

Table 2.15.5j provides a definition of the inspections, tests, and/or analyses, together with associated acceptance criteria, which will be undertaken for the Reactor Internal Pump ASD HVAC System.

Table 2.15.5k provides a definition of the inspections, tests, and/or analyses, together with associated acceptance criteria, which will be undertaken for the Turbine Island HVAC System.

Table 2.15.5l provides a definition of the inspections, tests, and/or analyses, together with associated acceptance criteria, which will be undertaken for the Radwaste Building HVAC System.

Table 2.15.5m provides a definition of the inspections, tests, and/or analyses, together with associated acceptance criteria, which will be undertaken for the Service Building HVAC System.

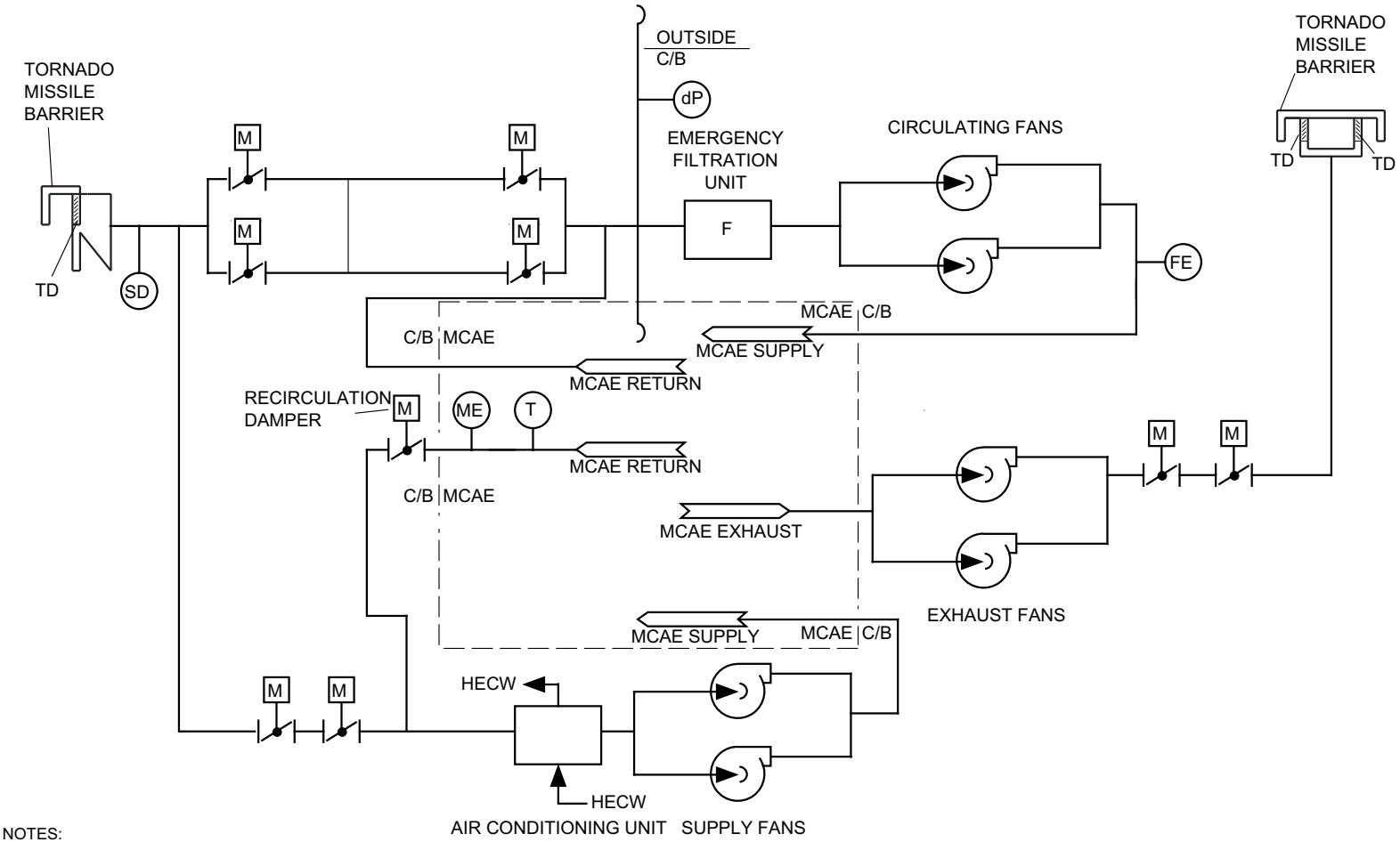

NOTES:

1. THIS FIGURE SHOWS ONE OF TWO IDENTICAL DIVISIONS. ELECTRICAL POWER LOADS FOR THE COMPONENTS OF DIVISION B EXCEPT MOTOR OPERATED ISOLATION DAMPERS ARE POWERED FROM CLASS 1E DIVISION II. ELECTRICAL POWER LOADS FOR THE COMPONENTS OF DIVISION C EXCEPT MOTOR OPERATED ISOLATION DAMPERS ARE POWERED FROM CLASS 1E DIVISION III.

2. EACH PAIR OF MOTOR OPERATED ISOLATION DAMPERS HAS ONE DAMPER POWERED FROM CLASS 1E DIVISION II AND THE OTHER DAMPER FROM CLASS 1E DIVISION III

Figure 2.15.5a Control Room Habitability Area HVAC System

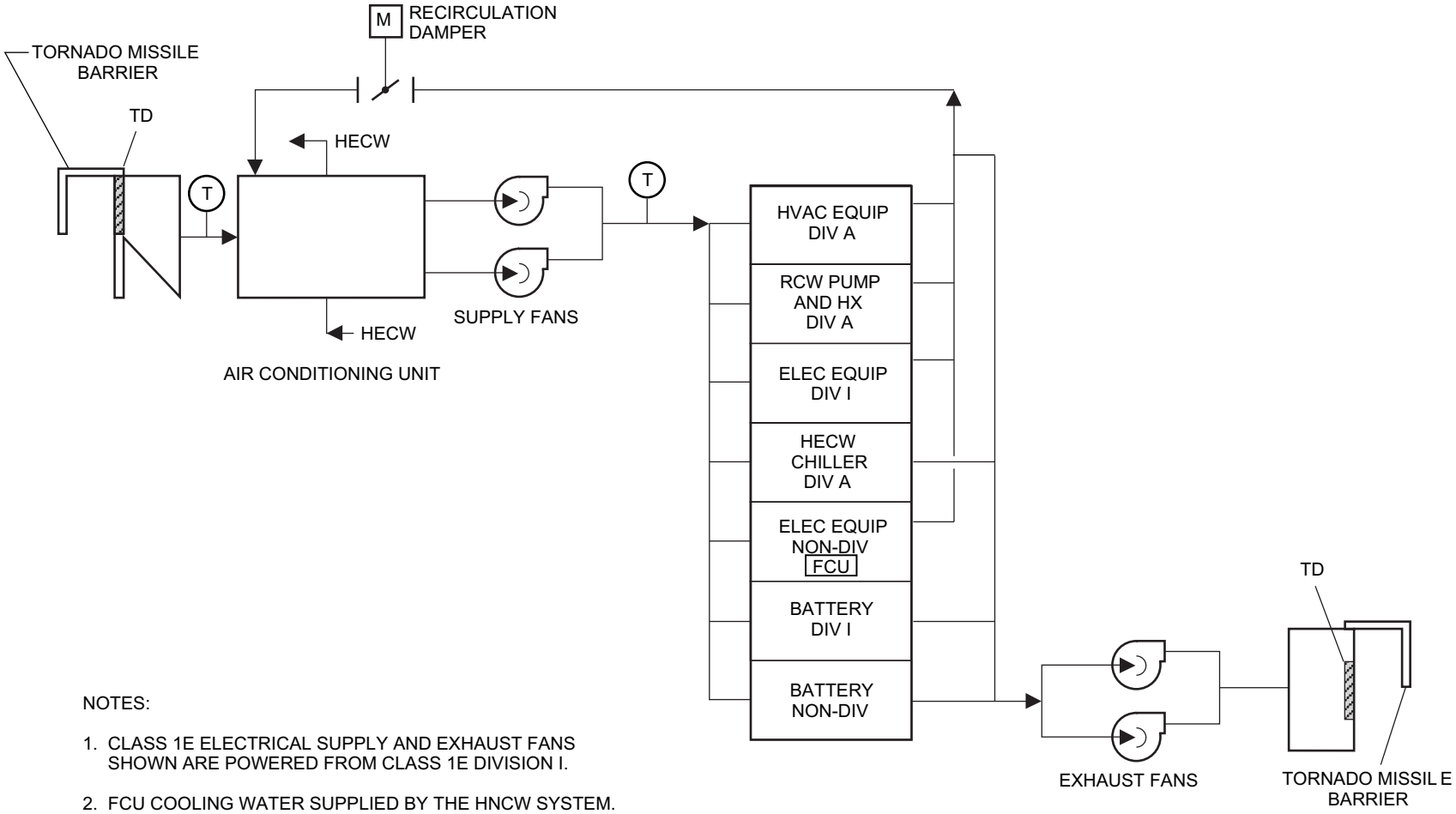

NOTES:

1. CLASS 1E ELECTRICAL SUPPLY AND EXHAUST FANS SHOWN ARE POWERED FROM CLASS 1E DIVISION I.
2. FCU COOLING WATER SUPPLIED BY THE HNCW SYSTEM.

Figure 2.15.5b Control Building Safety-Related Equipment Area HVAC System (Division A)

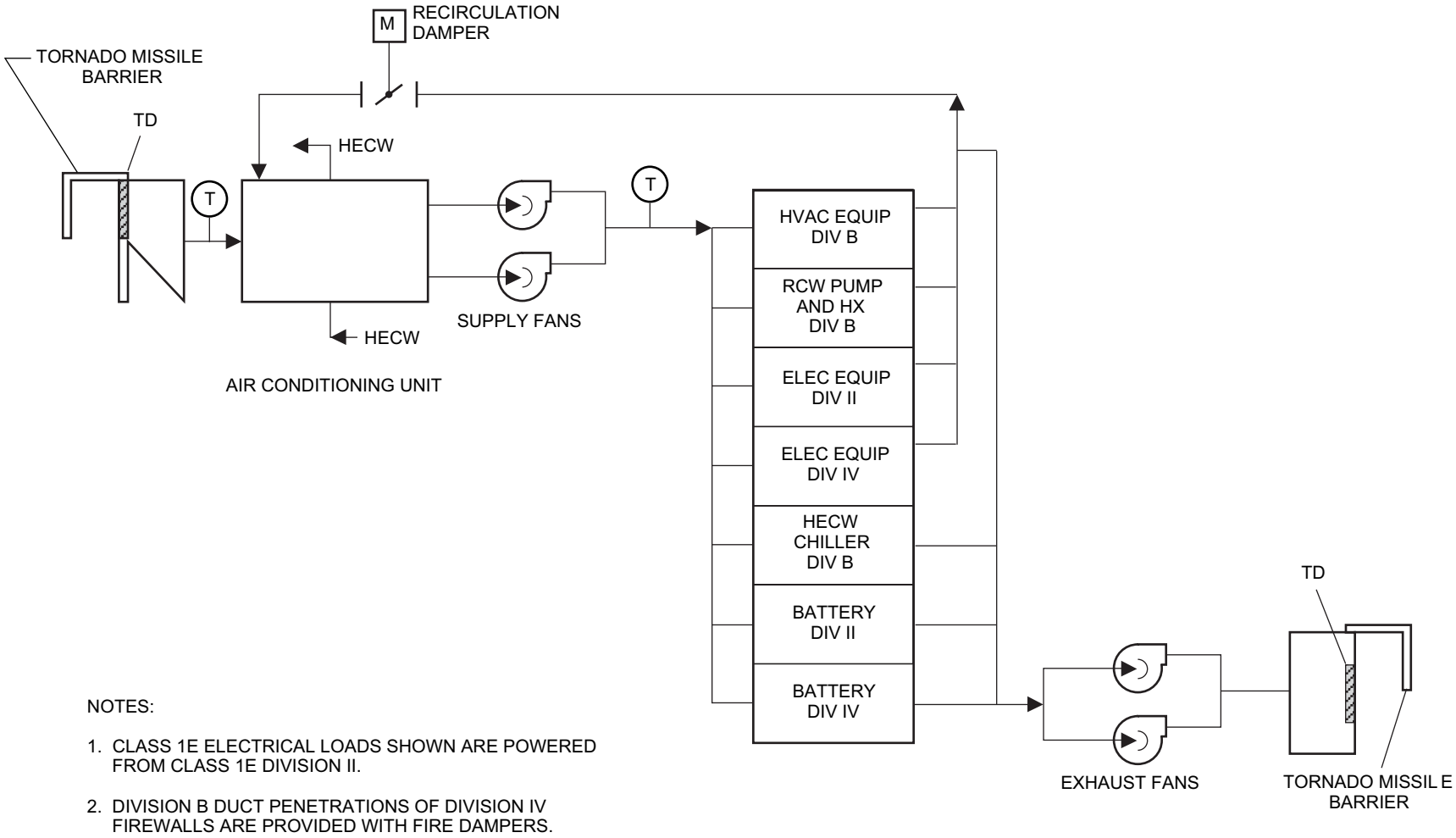

NOTES:

1. CLASS 1E ELECTRICAL LOADS SHOWN ARE POWERED FROM CLASS 1E DIVISION II.
2. DIVISION B DUCT PENETRATIONS OF DIVISION IV FIREWALLS ARE PROVIDED WITH FIRE DAMPERS.

Figure 2.15.5c Control Building Safety-Related Equipment Area HVAC System (Division B)

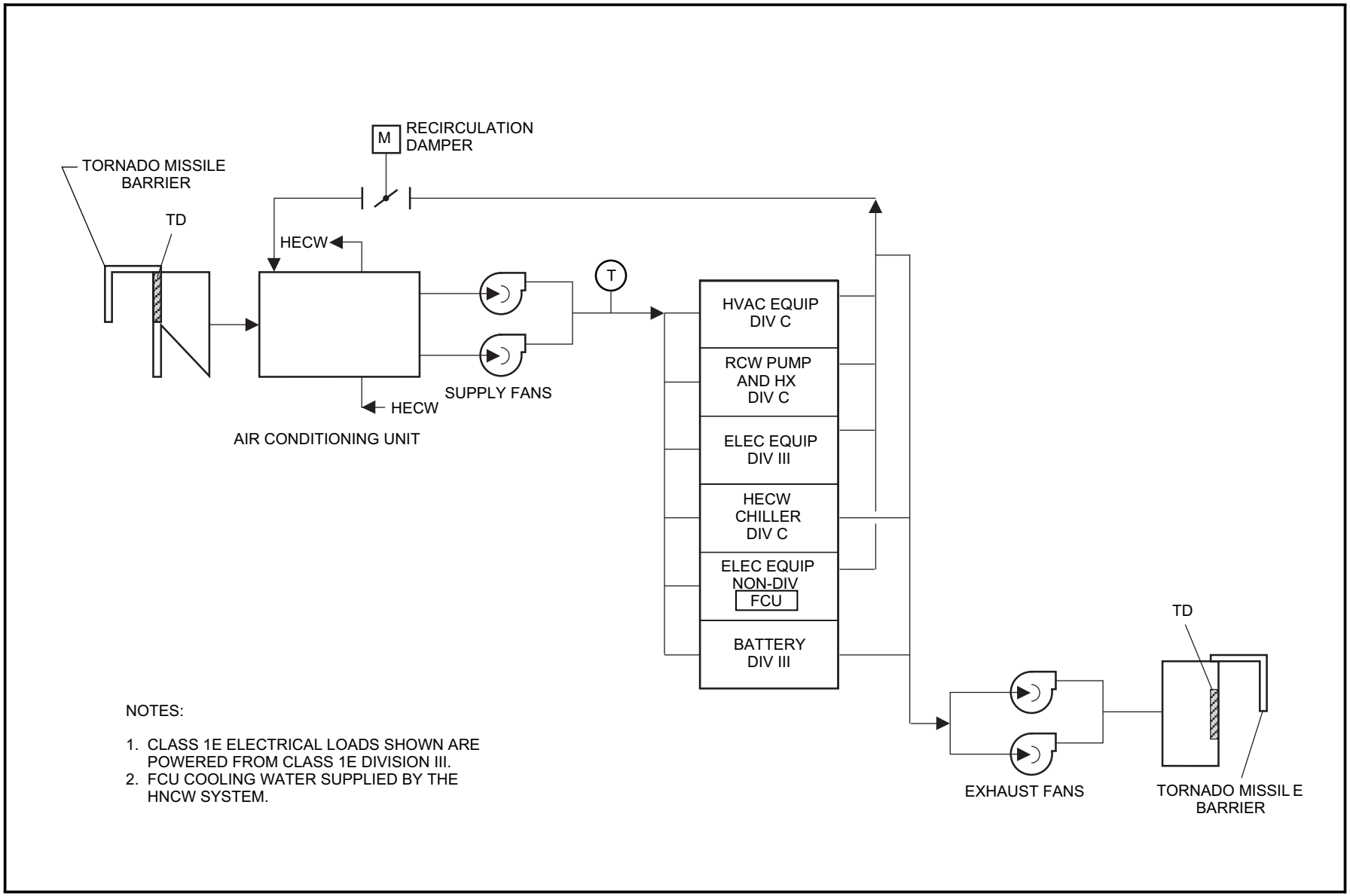

Figure 2.15.5d Control Building Safety-Related Equipment Area HVAC System (Division C)

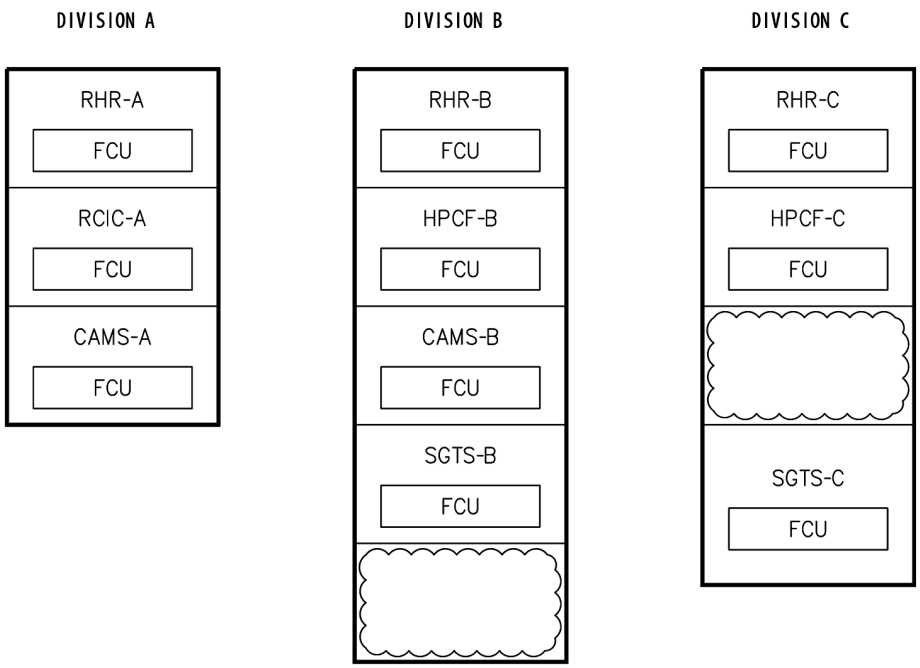

NOTES:

1. FCU COOLING WATER IS SUPPLIED BY THE RCW SYSTEM.

2. NORMAL VENTILATION AND SMOKE REMOVAL IS PROVIDED BY THE R/B SECONDARY CONTAINMENT HVAC SYSTEM.

3. ELECTRICAL POWER LOADS FROM DIVISIONS A,B, AND C ARE POWERED FROM CLASS 1E DIVISIONS I, II, AND III, RESPECTIVELY.

Figure 2.15.5e Reactor Building Safety-Related Equipment HVAC System

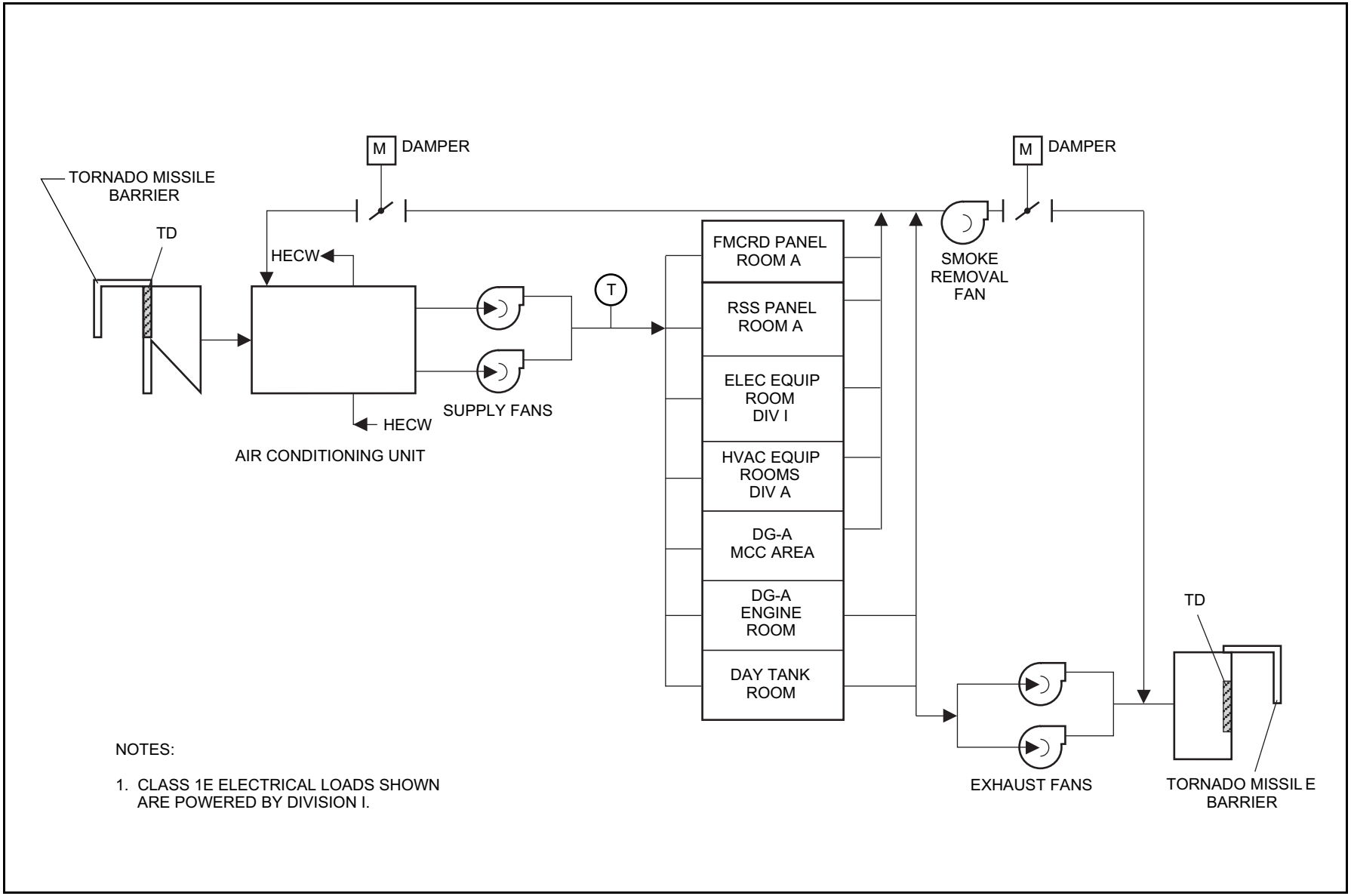

Figure 2.15.5f Reactor Building Safety-Related Electrical Equipment HVAC System (Division A)

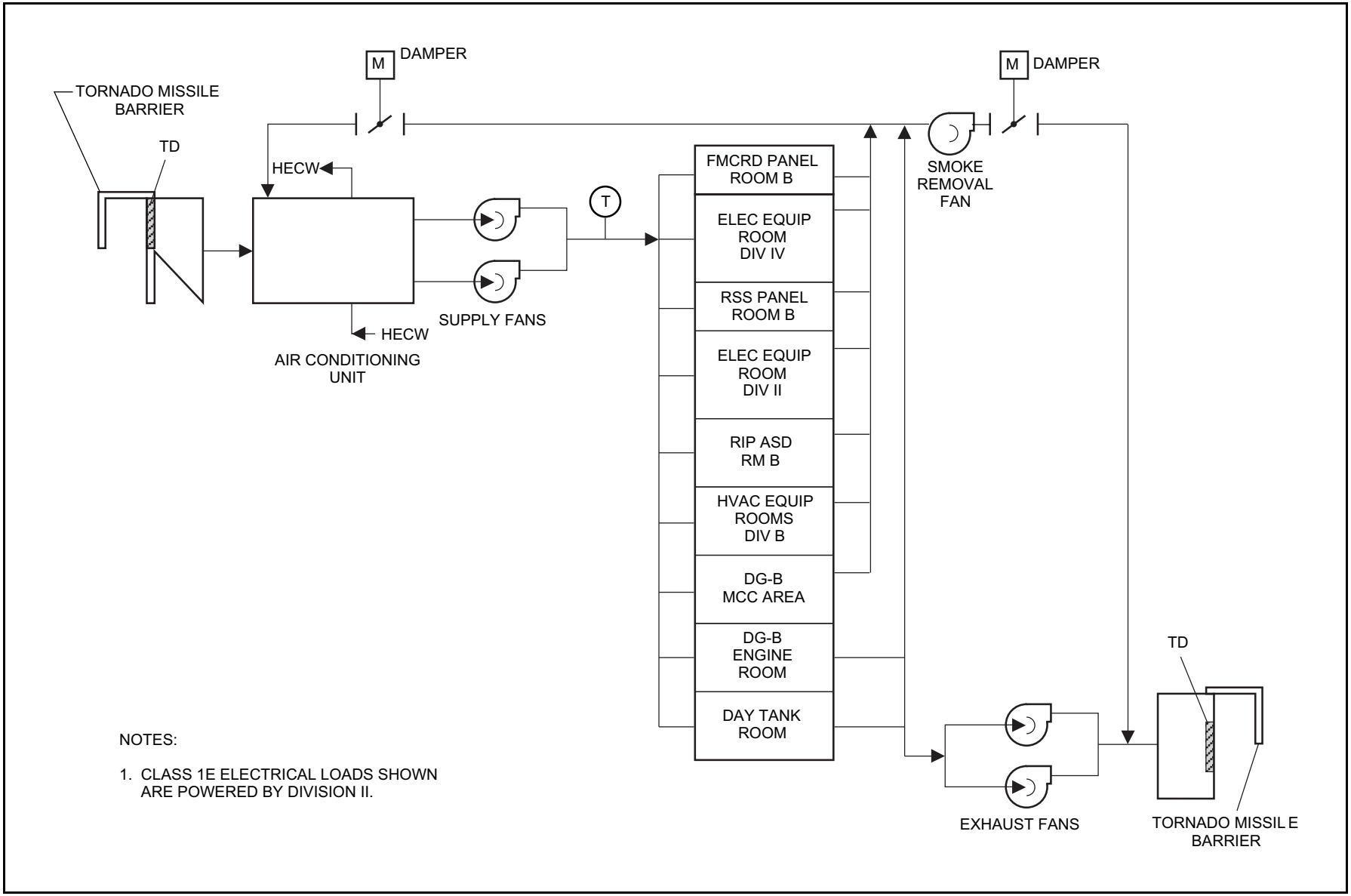

Figure 2.15.5g Reactor Building Safety-Related Electrical Equipment HVAC System (Division B)

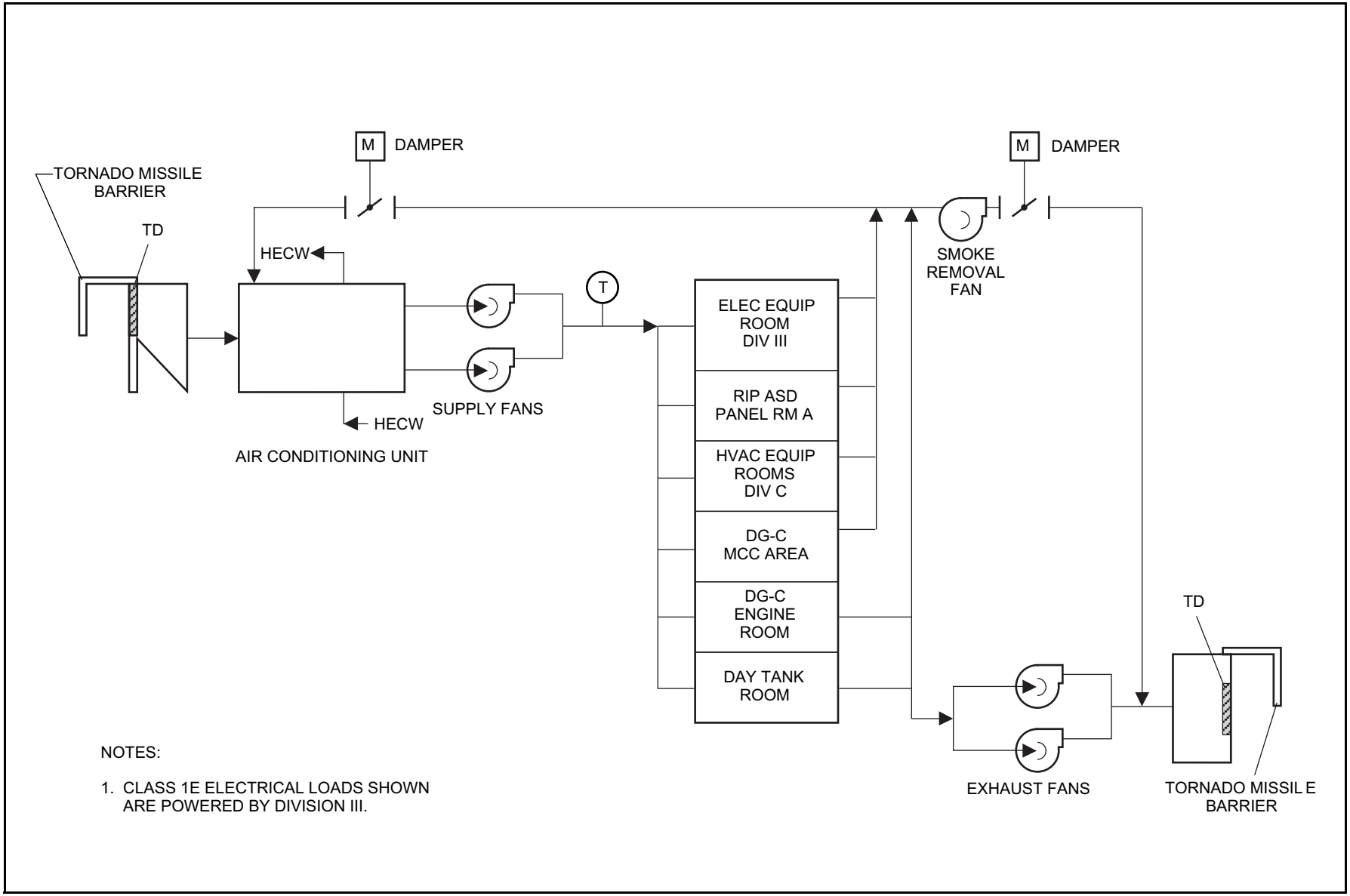

Figure 2.15.5h Reactor Building Safety-Related Electrical Equipment HVAC System (Division C)

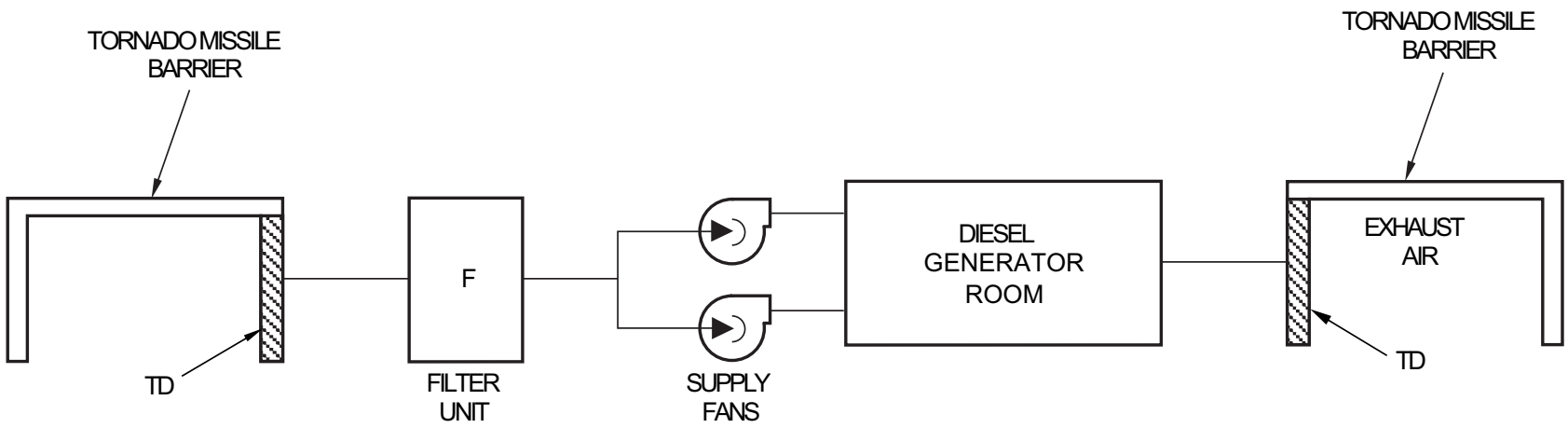

NOTES:

1. THIS FIGURE SHOWS ONE OF THREE IDENTICAL DIVISIONS. ELECTRICAL POWER LOADS FOR DIVISIONS A, B, AND C ARE POWERED FROM CLASS 1E DIVISIONS I, II, AND III, RESPECTIVELY.

Figure 2.15.5i Reactor Building Safety-Related Diesel Generator HVAC System

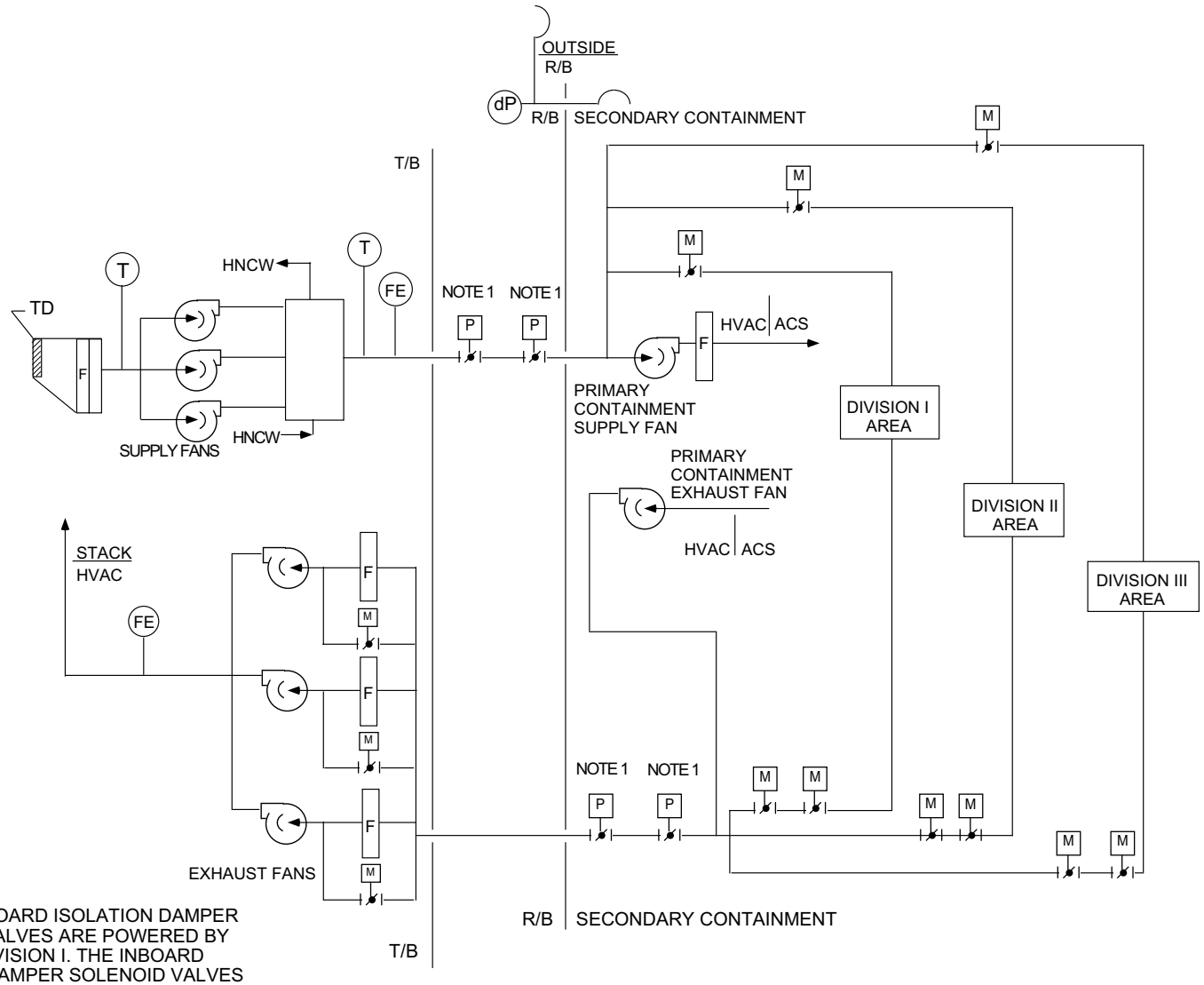

NOTES:
1. THE OUTBOARD ISOLATION DAMPER SOLENOID VALVES ARE POWERED BY CLASS 1E DIVISION I. THE INBOARD ISOLATION DAMPER SOLENOID VALVES ARE POWERED BY CLASS 1E DIVISION II.

Figure 2.15.5j Reactor Building Secondary Containment HVAC System

Table 2.15.5a Control Room Habitability Area HVAC System

Inspections, Tests, Analyses and Acceptance Criteria		
Design Commitment	**Inspections, Tests, Analyses**	**Acceptance Criteria**
1. The basic configuration of the CRHA HVAC System is as shown on Figure 2.15.5a.	1. Inspections of the as-built system will be conducted.	1. The as-built CRHA HVAC System conforms with the basic configuration shown on Figure 2.15.5a.
2. The emergency filtration unit have at least 99% removal efficiency for all forms of iodine (elemental organic, particulate, and hydrogen iodide).	2. a. Test will be conducted on each as-built emergency filtration unit. b. Tests in a test facility will be conducted on the iodine absorber material.	2. The emergency filtration unit iodine removal efficiency is at least 99%.
3. The exhaust fan automatically starts when the supply fan is started.	3. Tests will be conducted on each division of the CRHA HVAC System by starting the supply fan.	3. The exhaust fan automatically starts when the supply fan is started.
4. The MCAE is maintained at a minimum pressure of 3.2 mm water gauge above the outside atmosphere.	4. Tests will be conducted on the as-built CRHA HVAC System in the normal mode of operation.	4. The MCAE is maintained at a minimum pressure of 3.2 mm water gauge above the outside atmosphere.
5. a. On receipt of a PRM System signal for high radiation in the outside air intake of the operating division, the normal outside air intake dampers close, the exhaust air dampers close, the exhaust fan stops, the minimum outside air intake dampers open, and one fan of the emergency filtration unit starts.	5. a. Tests will be conducted on each CRHA HVAC System division using a simulated initiation signal.	5. a. Upon receipt of a simulated initiation signal the following occurs: (1) Normal outside air intake dampers are closed. (2) Exhaust air dampers are closed. (3) Exhaust fan is stopped. (4) Minimum outside air intake dampers are opened. (5) Emergency filtration unit fan is started.

Table 2.15.5a Control Room Habitability Area HVAC System (Continued)

Inspections, Tests, Analyses and Acceptance Criteria		
Design Commitment	**Inspections, Tests, Analyses**	**Acceptance Criteria**
b. In the high radiation mode, positive pressure of at least 3.2 mm water gauge is maintained in the MCAE relative to the outside atmosphere. Each emergency filtration unit treats a mixture of MCAE recirculated air and outside makeup air to maintain the positive pressure with not more than 3400 m^3/h (@ one atmosphere absolute pressure, 0°C) of outside air.	b. Tests will be conducted on each division of the as-built CRHA HVAC System in the high radiation mode.	b. The MCAE is maintained at a positive pressure of at least 3.2 mm water gauge relative to the outside atmosphere with outside makeup air of not more than 3400 m^3/h (@ one atmosphere absolute pressure, 0°C).
c. The redundant division of the CRHA HVAC System starts on a low flow signal from the operating emergency filtration unit.	c. Tests will be conducted on each division of the as-built CRHA HVAC System using simulated low flow signals.	c. The redundant division of the CRHA HVAC System starts on a low flow signal from the operating emergency filtration unit.
d. The redundant division of the CRHA HVAC System is connected to an outside air intake which is separated from the other by a minimum of 50m.	d. Inspections will be conducted on the CRHA HVAC System.	d. The CRHA HVAC System outside air intakes are at least 50m apart.
6. When smoke detection sensors in the operating outside air intake detects smoke, a signal will initiate MCAE air recirculation by isolating the outside air intake, closing the exhaust damper, and stopping the exhaust fan.	6. Tests will be conducted on each CRHA HVAC System division using a simulated smoke signal.	6. Upon receipt of a simulated initiation signal the following occurs: a. Outside air intake dampers are closed. b. Exhaust air dampers are closed. c. Exhaust fan is stopped.

Table 2.15.5a Control Room Habitability Area HVAC System (Continued)

Inspections, Tests, Analyses and Acceptance Criteria		
Design Commitment	**Inspections, Tests, Analyses**	**Acceptance Criteria**
7. Each of the two CRHA System divisions is powered from the respective Class 1E division as shown on Figure 2.15.5a. In the CRHA HVAC System, independence is provided between Class 1E divisions, and between Class 1E divisions and non-Class 1E equipment.	7. a. Tests will be performed on the CRHA HVAC System by providing a test signal in only one Class 1E division at a time. b. Inspection of the as-built Class 1E divisions in the CRHA HVAC System will be performed.	7. a. The test signal exists only in the Class 1E division under test in the CRHA HVAC System. b. In the CRHA HVAC System, physical separation or electrical isolation exists between Class 1E divisions. Physical separation or electrical isolation exists between these Class 1E divisions and non-Class equipment.
8. Each mechanical division of the CRHA HVAC System (Division B and C) is physically separated from the other division, except for the common ducts in the MCAE.	8. Inspections of the as-built CRHA HVAC System will be performed.	8. Each mechanical division of the CRHA HVAC System is physically separated from the other mechanical division of the CRHA HVAC System by structural and/or fire barriers.
9. Fire dampers with fusible links in HVAC duct work close under air flow conditions.	9. Type tests of fire dampers in a test facility will be performed for closure under system air flow conditions.	9. Fire dampers close under system air flow conditions.
10. Main control room displays and controls provided for CRHA HVAC System are as defined in Section 2.15.5.	10. Inspections will be performed on the main control room displays and controls for the CRHA HVAC System.	10. Displays and controls exist or can be retrieved in the main control room as defined in Section 2.15.5.

Table 2.15.5b Control Building Safety-Related Equipment Area HVAC System

Inspections, Tests, Analyses and Acceptance Criteria		
Design Commitment	**Inspections, Tests, Analyses**	**Acceptance Criteria**
1. The basic configuration of the CBSREA HVAC System is as shown on Figures 2.15.5b, 2.15.5c and 2.15.5d.	1. Inspections of the as-built system will be conducted.	1. The as-built CBSREA HVAC System conforms with the basic configuration shown on Figures 2.15.5b, 2.15.5c and 2.15.5d.
2. The exhaust fan automatically starts when the supply fan is started.	2. Tests will be conducted on each division of the as-built CBSREA HVAC System by starting the supply fan.	2. The exhaust fan automatically starts when the supply fan is started.
3. Hydrogen concentration is maintained at less than 2% by volume in the battery rooms.	3. Flow tests will be conducted on each battery room served by the CBSREA HVAC System. Hydrogen concentration analyses will be performed for each battery room using measured flow rates and maximum expected battery hydrogen evolution rates.	3. Hydrogen concentration is maintained at less than 2% by volume in the battery rooms.
4. Each of the three CBSREA HVAC System divisions is powered from the respective Class 1E division as shown on Figures 2.15.5b, 2.15.5c, and 2.15.5d. In the CBSREA HVAC System, independence is provided between Class 1E divisions, and between Class 1E divisions and non-Class 1E equipment.	4. a. Tests will be performed on the CBSREA HVAC System by providing a test signal in only one Class 1E division at a time. b. Inspection of the as-built Class 1E divisions in the CBSREA HVAC System will be performed.	4. a. The test signal exists only in the Class 1E division under test in the CBSREA HVAC System. b. In the CBSREA HVAC System, physical separation or electrical isolation exists between Class 1E divisions. Physical separation or electrical isolation exists between these Class 1E divisions and non-Class 1E equipment.
5. Each mechanical division of the CBSREA HVAC System (Divisions A, B and C) is physically separated from the other divisions.	5. Inspections of the as-built CBSREA HVAC System will be conducted.	5. Each mechanical division of the CBSREA HVAC System is physically separated from the other mechanical divisions of the CBSREA HVAC System by structural and/or fire barriers.

Table 2.15.5b Control Building Safety-Related Equipment Area HVAC System (Continued)

Inspections, Tests, Analyses and Acceptance Criteria		
Design Commitment	**Inspections, Tests, Analyses**	**Acceptance Criteria**
6. Fire dampers with fusible links in HVAC duct work close under air flow conditions.	6. Type tests of fire dampers in a test facility will be performed for closure under system air flow conditions.	6. Fire dampers close under system air flow conditions.
7. Main control room displays and controls provided for CBSREA HVAC System are as defined in Section 2.15.5.	7. Inspections will be performed on the main control room displays and controls for the CBSREA HVAC System.	7. Displays and controls exist or can be retrieved in the main control room as defined in Section 2.15.5.

Table 2.15.5c Reactor Building Safety-Related Equipment HVAC System

Inspections, Tests, Analyses and Acceptance Criteria		
Design Commitment	**Inspections, Tests, Analyses**	**Acceptance Criteria**
1. The basic configuration of the R/B Safety-Related Equipment HVAC System is as shown on Figure 2.15.5e.	1. Inspections of the as-built system will be conducted.	1. The as-built R/B Safety-Related Equipment HVAC System conforms with the basic configuration as shown on Figure 2.15.5e.
2. The RHR, HPCF, and RCIC pump room FCUs are automatically initiated upon start-up of their respective room process pumps.	2. Tests will be conducted on each pump room FCU using simulated signals indicating pump start-up.	2. Each pump room FCU starts when a signal indicates start-up of their respective room process pump.
3. The CAMS and SGTS room FCUs are automatically initiated upon isolation of the R/B Secondary Containment HVAC System.	3. Tests will be conducted on each as-built safety-related FCUs using simulated signals indicative isolation of the R/B Secondary Containment HVAC System.	3. The CAMS and SGTS room FCUs are automatically initiated upon isolation of the R/B Secondary Containment HVAC System.
4. Not used.	4. Not used.	4. Not used.
5. Each of the three division of the R/B Safety-Related Equipment HVAC System is powered from the respective Class 1E division as shown on Figure 2.15.5e. In the R/B Safety-Related Equipment HVAC System, independence is provided between Class 1E divisions, and between Class 1E divisions and non-Class 1E equipment.	5. a. Tests will be performed on the R/B Safety-Related Equipment HVAC System by providing a test signal in only one Class 1E division at a time. b. Inspection of the as-built Class 1E divisions in the R/B Safety-Related Equipment HVAC System will be performed.	5. a. The test signal exists only in the Class 1E division under test in the in the R/B Safety-Related Equipment HVAC System. b. In the R/B Safety-Related Equipment HVAC System, physical separation or electrical isolation exists between Class 1E divisions. Physical separation or electrical isolation exists between these Class 1E divisions and non-class 1E equipment.

Table 2.15.5c Reactor Building Safety-Related Equipment HVAC System (Continued)

Inspections, Tests, Analyses and Acceptance Criteria		
Design Commitment	**Inspections, Tests, Analyses**	**Acceptance Criteria**
6. Each mechanical division (Divisions A, B, C) of the R/B Safety-Related Equipment HVAC System is physically separated from the other divisions.	6. Inspections of the as-built R/B Safety-Related Equipment HVAC System will be conducted.	6. Each mechanical division of the R/B Safety-Related Equipment HVAC System is physically separated from the other mechanical divisions of the R/B Safety-Related Equipment HVAC System by structural and/or fire barriers.
7. Main control room displays and controls provided for the R/B Safety-Related Equipment HVAC System are as defined in Section 2.15.5.	7. Inspections will be performed on the main control room displays and controls for the R/B Safety-Related Equipment HVAC System.	7. Displays and controls exist or can be retrieved in the main control room as defined in Section 2.15.5.

Table 2.15.5d Reactor Building Safety-Related Electrical Equipment HVAC System

Inspections, Tests, Analyses and Acceptance Criteria		
Design Commitment	**Inspections, Tests, Analyses**	**Acceptance Criteria**
1. The basic configuration of the R/B Safety-Related Electrical Equipment HVAC System is as shown on Figures 2.15.5f, 2.15.5g, and 2.15.5h.	1. Inspections of the as-built system will be conducted.	1. The as-built R/B Safety-Related Electrical Equipment HVAC System conforms with the basic configuration shown on Figures 2.15.5f, 2.15.5g, and 2.15.5h.
2. The exhaust fan automatically starts when the supply fan is started.	2. Tests will be conducted on each division of the as-built R/B Safety-Related Electrical Equipment HVAC System by starting the supply fan.	2. The exhaust fan automatically starts when the supply fan is started.
3. Each of the three division of the R/B Safety-Related Electrical Equipment HVAC System is powered from the respective Class 1E division as shown on Figures 2.15.5f, 2.15.5g, and 2.15.5h. In the R/B safety-related electrical equipment HVAC system, independence is provided between Class 1E divisions, and between Class 1E divisions and non-Class 1E equipment.	3. a. Tests will be performed on the R/B Safety-Related Electrical Equipment HVAC System by providing a test signal in only one Class 1E division at a time. b. Inspection of the as-built Class 1E divisions in the R/B Safety-Related Electrical Equipment HVAC System will be performed.	3. a. The test signal exists only in the Class 1E division under test in the R/B Safety-Related Electrical Equipment HVAC System. b. In the R/B Safety-Related Electrical Equipment HVAC System, physical separation or electrical isolation exists between Class 1E divisions. Physical separation or electrical isolation exists between these Class 1E divisions and non-Class 1E equipment.
4. Each mechanical division of the R/B Safety-Related Electrical Equipment HVAC System (Divisions A, B, and C) is physically separated from the other divisions.	4. Inspections of the as-built R/B Safety-Related Electrical Equipment HVAC System will be conducted.	4. Each mechanical division of the R/B Safety-Related Electrical Equipment HVAC System is physically separated from the other mechanical divisions of the R/B Safety-Related Electrical Equipment HVAC System by structural and/or fire barriers.
5. Fire dampers with fusible links in HVAC duct work close under air flow conditions.	5. Type tests of fire dampers in a test facility will be performed for closure under system air flow conditions.	5. Fire dampers close under system air flow conditions.

Table 2.15.5d Reactor Building Safety-Related Electrical Equipment HVAC System (Continued)

Inspections, Tests, Analyses and Acceptance Criteria		
Design Commitment	**Inspections, Tests, Analyses**	**Acceptance Criteria**
6. Main control room displays and controls provided for R/B Safety-Related Electrical Equipment HVAC System are as defined in Section 2.15.5.	6. Inspections will be performed on the main control room displays and controls for the R/B Safety-Related Electrical Equipment HVAC System.	6. Displays and controls exist or can be retrieved in the main control room as defined in Section 2.15.5.

Table 2.15.5e Reactor Building Safety-Related Diesel Generator HVAC System

Inspections, Tests, Analyses and Acceptance Criteria		
Design Commitment	**Inspections, Tests, Analyses**	**Acceptance Criteria**
1. The basic configuration of the R/B Safety-Related DG HVAC System is as shown on Figure 2.15.5i.	1. Inspections of the as-built system will be conducted.	1. The as-built R/B Safety-Related DG HVAC System conforms with the basic configuration shown on Figure 2.15.5i.
2. On receipt of a DG start signal, both DG supply fans start.	2. Tests will be conducted on each division of the as-built R/B Safety-Related DG HVAC System using a simulated DG start signal.	2. On receipt of a DG start signal, both DG supply fans start.
3. Each of the three divisions of the R/B Safety-Related DG HVAC System is powered from the respective Class 1E division as shown on Figure 2.15.5i. In the R/B safety-related DG HVAC system, independence is provided between Class 1E divisions, and between Class 1E divisions and non-Class 1E equipment.	3. a. Tests will be performed on the R/B Safety-related DG HVAC System by providing a test signal in only one Class 1E division at a time. b. Inspection of the as-built Class 1E divisions in the R/B Safety-Related DG HVAC System will be performed.	3. a. The test signal exists only in the Class 1E division under test in the R/B Safety-Related DG HVAC System. b. In the R/B Safety-Related DG HVAC System, physical separation or electrical isolation exists between Class 1E divisions. Physical separation or electrical isolation exists between these Class 1E divisions and non-Class 1E equipment
4. Each mechanical division of the R/B Safety-Related DG HVAC System (Divisions A, B and C) is physically separated from the other divisions.	4. Inspections of the as-built R/B Safety-Related DG HVAC System will be conducted.	4. Each mechanical division of the R/B Safety-Related DG HVAC System is physically separated from the other mechanical divisions of the R/B Safety-Related DG HVAC System by structural and/or fire barriers.
5. Main control room displays and controls provided for R/B Safety-Related DG HVAC System are as defined in Section 2.15.5.	5. Inspections will be performed on the main control room displays and controls for the R/B Safety-Related DG HVAC System.	5. Displays and controls exist or can be retrieved in the main control room as defined in Section 2.15.5.

Table 2.15.5f Reactor Building Secondary Containment HVAC System

Inspections, Tests, Analyses and Acceptance Criteria		
Design Commitment	**Inspections, Tests, Analyses**	**Acceptance Criteria**
1. The basic configuration of the R/B Secondary Containment HVAC System is as shown on Figure 2.15.5j.	1. Inspections of the as-built system will be conducted.	1. The as-built R/B Secondary Containment HVAC System conforms with the basic configuration shown on Figure 2.15.5j.
2. The R/B Secondary Containment HVAC System maintains a negative pressure in the secondary containment relative to the outside atmosphere.	2. Tests will be conducted on the R/B Secondary Containment HVAC System in the normal mode of operation.	2. The R/B Secondary Containment HVAC System maintains a negative pressure in the secondary containment relative to the outside atmosphere.
3. The R/B Secondary Containment HVAC System isolation dampers are closed upon receipt of an isolation signal from the LDS, or signal indicating loss of secondary containment supply and exhaust fans.	3. Tests will be conducted on the R/B Secondary Containment HVAC System using simulated LDS isolation and loss of secondary containment supply and exhaust fans signals.	3. Upon receipt of a simulated signal, isolation dampers are automatically closed.
4. The smoke removal mode is manually initiated by starting the standby exhaust and supply fans, operating the exhaust filter unit bypass dampers, and partially closing the exhaust dampers for divisions not affected by fire.	4. Tests will be conducted in the smoke removal mode.	4. On manual initiation of smoke removal mode the following occurs: a. The standby exhaust fan starts. b. The standby supply fan starts. c. The filter unit bypass damper opens. d. The exhaust dampers of divisions not affected by fire partially close to a predetermined position. e. The measured air flow rate and the pressure in the ducts are at least equal to the values of the as-built smoke removal analysis.

Table 2.15.5f Reactor Building Secondary Containment HVAC System (Continued)

Inspections, Tests, Analyses and Acceptance Criteria		
Design Commitment	**Inspections, Tests, Analyses**	**Acceptance Criteria**
5. Each R/B Secondary Containment HVAC System isolation damper requiring electrical power is powered from the Class 1E division, as shown on Figure 2.15.5j. In the R/B secondary containment HVAC system, independence is provided between Class 1E divisions, and between Class 1E divisions and non-Class 1E equipment.	5. a. Tests will be performed on the R/B Secondary Containment HVAC System by providing a test signal in only one Class 1E division at a time. b. Inspection of the as-built Class 1E divisions in the R/B Secondary Containment HVAC System will be performed.	5. a. The test signal exists only in the Class 1E division under test in the R/B Secondary Containment HVAC System. b. In the R/B Secondary Containment HVAC System, physical separation or electrical isolation exists between Class 1E divisions. Physical separation or electrical isolation exists between these Class 1E divisions and non-Class 1E equipment.
6. Fire dampers with fusible links in HVAC duct work close under air flow conditions.	6. Type tests of fire dampers in a test facility will be performed for closure under system air flow conditions.	6. Fire dampers close under system air flow conditions.
7. Main control room displays and controls provided for the R/B Secondary Containment HVAC System are as defined in Section 2.15.5.	7. Inspections will be performed on the main control room displays and controls for the R/B Secondary Containment HVAC System.	7. Displays and controls exist or can be retrieved in the main control room as defined in Section 2.15.5.
8. The pneumatically-operated secondary containment isolation dampers, shown on Figure 2.15.5j, fail to the closed position in the event of loss of pneumatic pressure or loss of electrical power to the valve actuating solenoids.	8. Tests will be conducted on the as-built R/B Secondary Containment HVAC System pneumatic isolation dampers.	8. The secondary containment isolation dampers shown on Figure 2.15.5j fail to the closed position on loss of pneumatic pressure or loss of electrical power to the valve actuating solenoids.

Table 2.15.5g Reactor Building Containment Supply/Exhaust System

Inspections, Tests, Analyses and Acceptance Criteria		
Design Commitment	**Inspections, Tests, Analyses**	**Acceptance Criteria**
1. The basic configuration of the R/B Primary Containment Supply/Exhaust HVAC System is as described in Section 2.15.5.	1. Inspections of the as-built system will be conducted.	1. The as-built R/B Primary Containment Supply/Exhaust HVAC System conforms with the basic configuration described in Section 2.15.5.

Table 2.15.5h Reactor Building Main Steam Tunnel HVAC System

Inspections, Tests, Analyses and Acceptance Criteria		
Design Commitment	**Inspections, Tests, Analyses**	**Acceptance Criteria**
1. The basic configuration of the R/B Main Steam Tunnel HVAC System is as described in Section 2.15.5.	1. Inspections of the as-built system will be conducted.	1. The as-built R/B Main Steam Tunnel HVAC System conforms with the basic configuration described in Section 2.15.5.

Table 2.15.5i Reactor Building Non-Safety-Related HVAC System

Inspections, Tests, Analyses and Acceptance Criteria		
Design Commitment	**Inspections, Tests, Analyses**	**Acceptance Criteria**
1. The basic configuration of the R/B Non-Safety-Related HVAC System is as described in Section 2.15.5.	1. Inspections of the as-built system will be conducted.	1. The as-built R/B Non-Safety-Related Equipment HVAC System conforms with the basic configuration described in Section 2.15.5.

Table 2.15.5j Reactor Internal Pump ASD Control Panel HVAC System

Inspections, Tests, Analyses and Acceptance Criteria		
Design Commitment	**Inspections, Tests, Analyses**	**Acceptance Criteria**
1. The basic configuration of the RIP ASD HVAC System is as described in Section 2.15.5.	1. Inspections of the as-built system will be conducted.	1. The as-built RIP ASD HVAC System conforms with the basic configuration described in Section 2.15.5.

Table 2.15.5k Turbine Island HVAC System

Inspections, Tests, Analyses and Acceptance Criteria		
Design Commitment	**Inspections, Tests, Analyses**	**Acceptance Criteria**
1. The basic configuration of the Turbine Island HVAC System is as described in Section 2.15.5.	1. Inspections of the as-built system will be conducted.	1. The as-built Turbine Island HVAC System conforms with the basic configuration described in Section 2.15.5.

Table 2.15.5l Radwaste Building HVAC System

Inspections, Tests, Analyses and Acceptance Criteria		
Design Commitment	**Inspections, Tests, Analyses**	**Acceptance Criteria**
1. The basic configuration of the Radwaste Building HVAC System is as described in Section 2.15.5.	1. Inspections of the as-built system will be conducted.	1. The as-built Radwaste Building HVAC System conforms with the basic configuration described in Section 2.15.5.

Table 2.15.5m Service Building HVAC System

Inspections, Tests, Analyses and Acceptance Criteria		
Design Commitment	**Inspections, Tests, Analyses**	**Acceptance Criteria**
1. The basic configuration of the S/B HVAC System is as described in Section 2.15.5.	1. Inspections of the as-built system will be conducted.	1. The as-built S/B HVAC System conforms with the basic configuration described in Section 2.15.5.
2. On receipt of a signal from the TSC or MCR, the normal air intake damper closes, the minimum outside air in take damper opens, and the ventilation air for the Clean Area is routed through the emergency filtration unit.	2. A test of the Clean Area HVAC System will be performed using a simulated isolation signal for the intake.	2. Upon receipt of a simulated isolation signal, the normal Clean Area air intake damper closes, the minimum outside air intake damper opens, and ventilation for the Clean Area is routed through the emergency filtration unit.
3. In the high radiation mode, a positive pressure is maintained in the Clean Area relative to the outside atmosphere.	3. A test will be conducted of the as-built Clean Area HVAC System in the simulated high radiation mode.	3. The Clean Area is maintained at a positive pressure relative to the outside atmosphere.
4. The emergency filtration unit for the Clean Area ventilation air has at least 95% removal efficiency for all forms of iodine (elemental, organic, particulate, and hydrogen iodide).	4. a. Tests will be conducted on each as-built emergency filtration unit. b. Tests in a test facility will be conducted of the iodine absorber material.	4. The emergency filtration unit efficiency is at least 95%.

2.15.6 Fire Protection System

Design Description

The Fire Protection System (FPS) detects, alarms and extinguishes fires. Fire detection and alarm systems are provided in all fire areas. The FPS consists of a motor driven pump, a diesel drive pump, sprinkler systems, standpipes and hose reels, and portable extinguishers. The foam systems are also used for special applications. The basic configuration of the FPS water supply system is shown on Figure 2.15.6. The FPS provides fire protection for the Reactor Building, Control Building, Turbine Building, Radwaste Building, and other plant buildings.

Areas covered by sprinklers or foam systems are also covered by the manual hose system. Areas covered only by manual hoses can be reached from at least two hose stations. A hose reel and fire extinguisher are located no greater than 30.5m from any location within the buildings.

The FPS is classified as non-safety-related. The sprinkler systems and the standpipe systems in the Reactor and Control Buildings and portions of the FPS water supply system identified in Figure 2.15.6 remain functional following a safe shutdown earthquake (SSE). These portions of the water supply are separated from the remainder of the system by valves as shown in Figure 2.15.6.

Fresh water is used for the water supply system. Two sources with a minimum capacity of 1140 m^3 for each source are provided. A minimum of 456 m^3 is reserved for use by the portion of the suppression system used for the Reactor and Control Buildings. Both the diesel driven pump and motor driven pump independently supply a minimum flow of 1893 liters/min at a pressure greater than 448.2 kPa at the most hydraulically remote hose connection in either the Reactor or Control Building. The two fire water pumps provide 5678 liters/min of flow each at a differential pressure of 863 kPa.

A fire water supply connection to the Residual Heat Removal System piping is provided from the portion of the FPS used for the Reactor and Control Buildings to provide an AC independent water addition system mode of the RHR System for reactor vessel injection or drywell sprays.

Automatic foam water extinguishing systems are provided for the diesel generator rooms and day tank rooms.

Fire detection and alarm systems are supplied with power from a non-Class 1E uninterruptible power supply.

The FPS has the following displays and alarms in the Main Control Room (MCR):

(1) Detection system fire alarms.

(2) Status of FPS pumps.

A plant fire hazards analysis considers potential fire hazards and assesses the effects of postulated fires on the ability to shutdown the reactor and to maintain the reactor in a safe, cold shutdown condition. Each postulated fire is documented in a Fire Hazards Report.

Inspections, Tests, Analyses and Acceptance Criteria

Table 2.15.6 provides a definition of the inspections, tests, and/or analyses, together with associated acceptance criteria, which will be undertaken for the Fire Protection System.

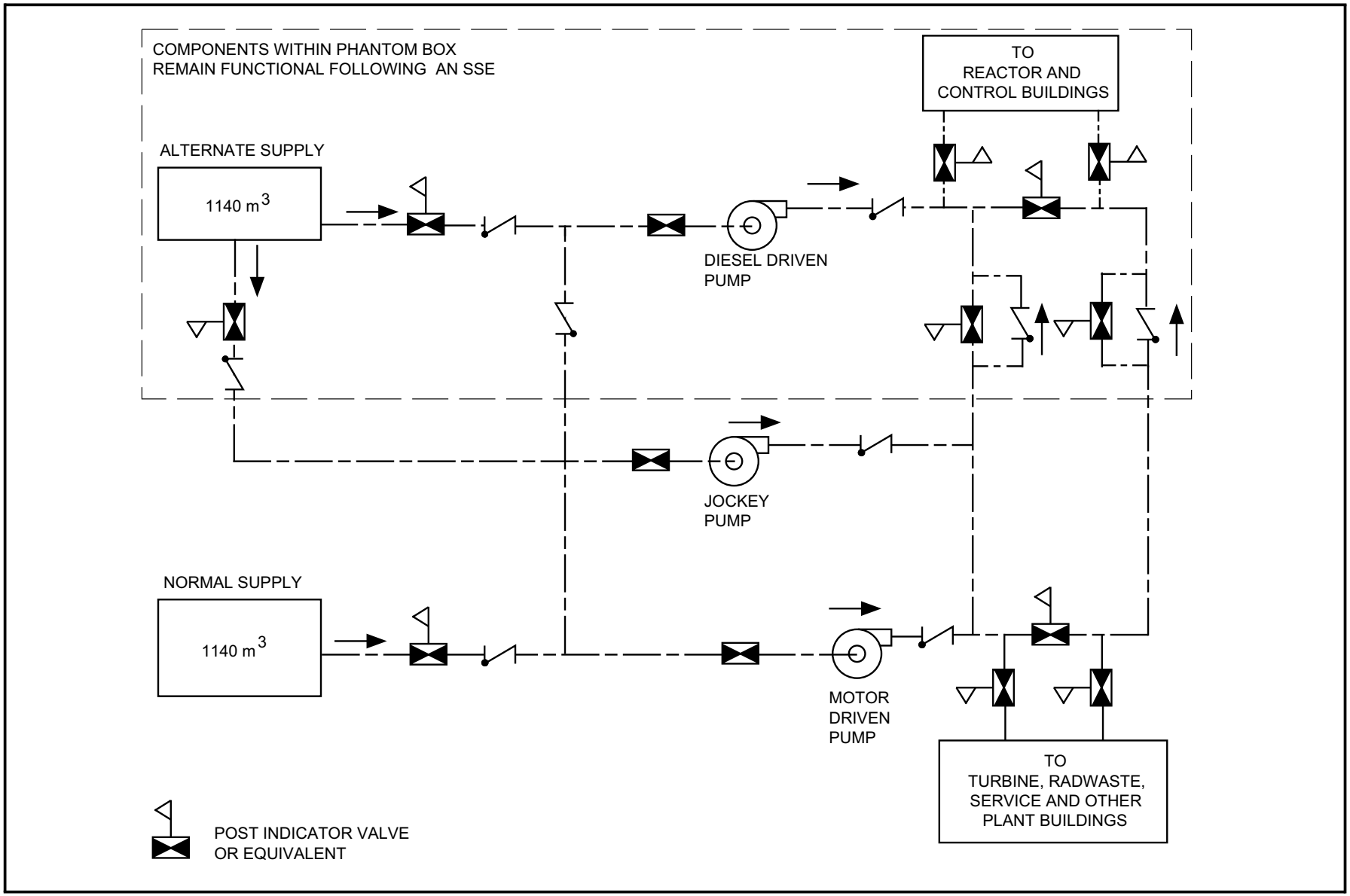

Figure 2.15.6 Fire Protection Water Supply System

Table 2.15.6 Fire Protection System

Inspections, Tests, Analyses and Acceptance Criteria		
Design Commitment	**Inspections, Tests, Analyses**	**Acceptance Criteria**
1. The basic configuration for the FPS is defined in Section 2.15.6	1. Inspections of the as-built FPS will be conducted.	1. The as-built configuration of the FPS is in accordance with Section 2.15.6.
2. Fire detection and alarm systems are provided in all fire areas.	2. Inspection and testing of the as-built detectors will be performed using simulated fire conditions.	2. The detectors respond to the simulated fire conditions.
3. The FPS for the Reactor and Control Buildings supplies a minimum flow of 1893 liters/min at a pressure greater than 448.2 kPa at the most hydraulically remote hose connection in either the Reactor or Control Building.	3. Tests will be conducted of the as-built FPS.	3. The FPS for the Reactor and Control Buildings supplies a minimum flow of 1893 liters/min at a pressure greater than 448.2 kPa at the most hydraulically remote hose connection in either the Reactor or Control Building.
4. Automatic foam-water extinguishing systems are provided for the diesel generator and day tank rooms.	4. Inspections of the as-built foam-water extinguishing systems will be conducted. The automatic logic will be tested using simulated fire conditions.	4. The automatic foam-water suppression systems are present and initiation logic is actuated under simulated fire conditions.
5. The sprinkler systems and the standpipe systems in the Reactor and Control Buildings and the portions of the FPS water supply system identified in Figure 2.15.6 remain functional following an SSE.	5. Seismic analyses of the as-built FPS will be performed.	5. An analysis report exists which concludes that as-built sprinkler systems and the standpipe systems in the Reactor and Control Buildings and the portions of the FPS water supply system identified in Figure 2.15.6 remain functional following an SSE.
6. The fire detection and alarm systems are supplied with power from a non-Class 1E uninterruptible power supply.	6. Inspections of the as-built FPS will be conducted.	6. The FPS is supplied with power from a non-Class 1E uninterruptible power supply.
7. MCR alarms and displays provided for the FPS are as defined in Section 2.15.6.	7. Inspections will be performed on the MCR alarms, and displays for the FPS.	7. Alarms and displays exist or can be retrieved in the MCR as defined in Section 2.15.6.

Table 2.15.6 Fire Protection System (Continued)

Inspections, Tests, Analyses and Acceptance Criteria		
Design Commitment	**Inspections, Tests, Analyses**	**Acceptance Criteria**
8. Two fire water supply system pumps provide 5678 liters/min of flow each at a differential pressure of 863 kPa.	8. Tests will be conducted of the as-built FPS pumps in a test facility.	8. Two fire water supply system pumps provide 5678 liters/min of flow each at a differential pressure of 863 kPa.
9. A plant fire hazards analysis considers potential fire hazards and assesses the effects of postulated fires on the ability to shutdown the reactor and to maintain the reactor in a safe, cold shutdown condition. Each postulated fire is documented in a Fire Hazards Report.	9. Inspections of the Fire Hazards Report will be conducted.	9. A Fire Hazards Report exists for the as-built plant and concludes that for each postulated fire, the plant can be shutdown and maintained in a safe, cold shutdown condition.

2.15.7 Floor Leakage Detection System

No entry for this system.

2.15.8 Vacuum Sweep System

No entry for this system.

2.15.9 Decontamination System

No entry for this system.

2.15.10 Reactor Building

Design Description

The Reactor Building (R/B) is a structure which houses and provides protection and support for the reactor primary systems, the primary containment and much of the plant safety-related equipment. Figures 2.15.10a through 2.15.10o show the basic configuration and scope of the R/B*.

The R/B is constructed of reinforced concrete and structural steel with a steel frame and reinforced concrete roof. The R/B encloses the primary containment. The R/B slabs and fuel pool girders are integrated with the reinforced concrete containment vessel (RCCV). The R/B slabs are supported by columns, shear walls and beams to carry vertical loads to the basemat and transfer horizontal loads through the RCCV and R/B shear walls to the basemat and R/B foundation. The R/B, together with the RCCV and the reactor pedestal, are supported by a common basemat. Inside the RCCV, the basemat is considered part of the Primary Containment System (PCS); outside the RCCV, the basemat is part of the R/B. The top of the R/B basemat is located 20.2m ± 0.3m below the finished grade elevation.

The R/B is divided into three separate divisional areas for mechanical and electrical equipment and four divisional areas for instrumentation racks. Inter-divisional boundaries have the following features:

(1) Inter-divisional walls, floors, doors and penetrations, and penetrations in the external R/B walls to connecting tunnels, which have three-hour fire rating.

(2) Watertight doors in the basement to prevent flooding in one division from propagating to other divisions.

(3) Divisional walls in the basement are 0.6 meters thick or greater.

Watertight doors on Emergency Core Cooling System rooms have open/close sensors with status indication and alarms in the main control room.

The R/B flooding that results from component failures in any of the R/B divisions does not prevent safe shutdown of the reactor. The basement floor is the collection location point for floods. The building configuration at this elevation is such that even for a flooding event involving release of either the suppression pool or the condensate storage tank (CST) water into the R/B, no more than one division of safety-related equipment is affected. Except for the basement area, safety-related electrical, instrumentation and control equipment is located at least 20 cm above the floor surface.

* The overall building dimensions provided in Figures 2.15.10a through 2.15.10o are provided for information only and are not intended to be part of the certified ABWR information.

The R/B is protected against external flood. The following design features are provided:

(1) External walls below flood level are equal to or greater than 0.6 meters thick to prevent ground water seepage.

(2) Penetrations in the external walls below flood level are provided with flood protection features.

(3) A tunnel connects the Radwaste Building, Turbine Building, Control Building and Reactor Building for the liquid radwaste system piping. The penetrations from the tunnel to the Reactor Building are watertight.

The R/B is protected against the pressurization effects associated with postulated rupture of pipes containing high-energy fluid that occur in subcompartments of the R/B.

There are three divisionally separated tunnels for routing Oil Storage and Transfer (OST) System piping and cable from the fuel oil storage tanks to the R/B. These tunnels are configured so that any fuel oil leakage does not accumulate at the R/B boundary. Tunnel flooding due to site flood conditions is precluded by protecting the entrances against water entry.

The R/B and oil transfer tunnels are classified as Seismic Category I. They are designed and constructed to accommodate the dynamic and static loading conditions associated with the various loads and load combinations which form the structural design basis. The loads are (as applicable)those associated with:

(1) Natural phenomena—wind, floods, tornados (including tornado missiles), earthquakes, rain and snow.

(2) Internal events—floods, pipe breaks and missiles.

(3) Normal plant operation—live loads, dead loads, temperature effects and building vibration loads.

Systems, structures, and components located in the R/B and classified as safety-related are protected against inter-divisional flooding that results from postulated failures in Seismic Category I or non-nuclear safety (NNS) components located in the R/B or from external flooding events. Each postulated flooding event is documented in a Flood Analysis Report which concludes the reactor can be shutdown safely and maintained in a safe, cold shutdown condition without offsite power.

Inspections, Tests, Analyses and Acceptance Criteria

Table 2.15.10 provides a definition of the inspections, tests, and/or analyses, together with associated acceptance criteria, which will be undertaken for the R/B.

Redacted Security-Sensitive Information

Figure 2.15.10a Reactor Building Arrangement—Section A-A

Redacted Security-Sensitive Information

Figure 2.15.10b Reactor Building Arrangement—Section B-B

Redacted Security-Sensitive Information

Figure 2.15.10c Reactor Building Arrangement, Floor B3F with Divisional Boundary for Flood—Elevation –8200 mm

Redacted Security-Sensitive Information

Figure 2.15.10d Reactor Building Arrangement, Floor B3F with Divisional Boundary for Fire—Elevation –8200 mm

Redacted Security-Sensitive Information

Figure 2.15.10e Reactor Building Arrangement—Elevation –5100 mm

Redacted Security-Sensitive Information

Figure 2.15.10f Reactor Building Arrangement, Floor B2F—Elevation –1700 mm

Redacted Security-Sensitive Information

Figure 2.15.10g Reactor Building Arrangement—Elevation 1500 mm

Redacted Security-Sensitive Information

Figure 2.15.10h Reactor Building Arrangement, Floor B1F—Elevation 4800 mm

Redacted Security-Sensitive Information

Figure 2.15.10i Reactor Building Arrangement—Elevation 8500 mm

Redacted Security-Sensitive Information

Figure 2.15.10j Reactor Building Arrangement, Floor 1F—Elevation 12300 mm

Redacted Security-Sensitive Information

Figure 2.15.10k Reactor Building Arrangement, Floor 2F—Elevation 18100 mm

Redacted Security-Sensitive Information

Figure 2.15.10l Reactor Building Arrangement, Floor 3F—Elevation 23500 mm

Redacted Security-Sensitive Information

Figure 2.15.10m Reactor Building Arrangement—Elevation 27200 mm

Redacted Security-Sensitive Information

Figure 2.15.10n Reactor Building Arrangement, Floor 4F—Elevation 31700 mm

Redacted Security-Sensitive Information

Figure 2.15.10o Reactor Building Arrangement—Elevations 34500 mm and 38200 mm

Table 2.15.10 Reactor Building

Inspections, Tests, Analyses and Acceptance Criteria		
Design Commitment	**Inspections, Tests, Analyses**	**Acceptance Criteria**
1. The basic configuration of the R/B is shown on Figures 2.15.10a through 2.15.10o.	1. Inspections of the as-built structure will be conducted.	1. The as-built R/B conforms with the basic configuration shown in Figures 2.15.10a through 2.15.10o.
2. The top of the R/B basemat is located 20.2m ±0.3m below the finished grade elevation.	2. Inspections of the as-built structure will be conducted.	2. The top of the R/B basemat is located 20.2m ±0.3m below the finished grade elevation.
3. Inter-divisional walls, floors, doors and penetrations, and penetrations in the external R/B walls to connecting tunnels, have a three-hour fire rating.	3. Inspections of the as-installed inter-divisional boundaries and external wall penetrations to connecting tunnels will be conducted.	3. The as-installed walls, floors, doors and penetrations that form the inter-divisional boundaries and external wall penetrations to connecting tunnels have a three-hour fire rating.
4. The R/B has divisional areas with walls and watertight doors are as shown on Figures 2.15.10a through 2.15.10o.	4. Inspections of the as-built walls and watertight doors will be conducted.	4. The as-built R/B has walls and watertight doors as shown on Figures 2.15.10a through 2.15.10o.
5. Main control room displays and alarms provided for the R/B are as defined in Section 2.15.10.	5. Inspections will be performed on the main control room displays and alarms for the R/B.	5. Displays and alarms exist or can be retrieved in the main control room as defined in Section 2.15.10.
6. A flooding event involving release of either the suppression pool or the CST water does not affect more than one division of safety-related equipment.	6. Inspections will be conducted of the divisional boundaries shown on Figure 2.15.10c.	6. Penetrations (except for watertight doors) in the divisional walls are at least 2.5m above the floor level of -8200 mm.
7. Except for the basement area, safety-related electrical, instrumentation, and control equipment is located at least 20 cm above the floor surface.	7. Inspections will be conducted of the as-built equipment.	7. Except for the basement area, safety-related electrical, instrumentation, and control equipment is located at least 20 cm above the floor surface.

Table 2.15.10 Reactor Building (Continued)

Inspections, Tests, Analyses and Acceptance Criteria		
Design Commitment	**Inspections, Tests, Analyses**	**Acceptance Criteria**
8. The R/B is protected against external floods by having: a. External walls below flood level that are equal to or greater than 0.6m thick to prevent ground water seepage. b. Penetrations in the external walls below flood level provided with flood protection features. c. Watertight penetrations to the Reactor Building from the tunnel that connects the Radwaste Building, Turbine Building and Reactor Building for the liquid radwaste system piping.	8. Inspections of the as-built structure will be conducted.	8. a. External walls below flood level are equal to or greater than 0.6m thick to prevent ground water seepage. b. Penetrations in the external walls below flood level are provided with flood protection features. c. Penetrations from the tunnel to the Reactor Building are watertight.
9. There are three divisionally separated tunnels for routing OST system piping from the fuel storage tanks to the R/B. These tunnels are configured so that any fuel oil leakage does not accumulate at the R/B boundary. Tunnel flooding due to site flood conditions is precluded by protecting the entrances against water entry.	9. Inspections of the as-built tunnels will be conducted.	9. There are three divisionally separated tunnels for routing OST System piping from the fuel storage tanks to the R/B. These tunnels are configured so that any fuel oil leakage does not accumulate at the R/B boundary. Tunnel flooding due to site flood conditions is precluded by protecting the entrances against water entry.
10. The R/B and oil transfer tunnels are able to withstand the structural design basis loads as defined in Section 2.15.10.	10. A structural analysis will be performed which reconciles the as-built data with structural design basis as defined in Section 2.15.10.	10. A structural analysis report exists which concludes that the as-built R/B and oil transfer tunnels are able to withstand the structural design basis loads as defined in Section 2.15.10.

Table 2.15.10 Reactor Building (Continued)

Inspections, Tests, Analyses and Acceptance Criteria		
Design Commitment	**Inspections, Tests, Analyses**	**Acceptance Criteria**
11. Systems, structures and components located in the R/B and classified as safety-related are protected against inter-divisional flooding that results from postulated failures in Seismic Category I or NNS related components located in the R/B or from external flooding events. Each postulated flooding event is documented in a Flood Analysis Report which concludes the reactor can be shutdown safely and maintained in a safe, cold shutdown condition without offsite power.	11. Inspections of the Flood Analysis Report and the as-built flood protection features will be conducted.	11. A Flood Analysis Report exists for the as-built R/B and concludes that for each postulated flooding event, the reactor can be shutdown safely and maintained in a safe, cold shutdown condition without offsite power. The Flood Analysis Report includes the results of inspections of the as-built flood protection features.

2.15.11 Turbine Building

Design Description

The Turbine Building (T/B) includes the electrical building and houses the main turbine generator and other power conversion cycle equipment and auxiliaries. The T/B is located adjacent to the safety-related Seismic Category I Control Building. With the exception of instrumentation associated with monitoring of condenser pressure, turbine first-stage pressure, turbine control valve oil pressure and stop valve position, and electrical switchgear and trip breakers for the condensate pumps, there is no safety-related equipment in the T/B. The electrical building houses various plant support systems and equipment such as non-divisional switchgear and chillers.

A tunnel connects the Radwaste Building, Turbine Building, Control Building and Reactor Building for the liquid radwaste system piping. The penetrations from the tunnel to the Turbine Building are watertight and have a three hour fire rating.

Flood conditions in the T/B, except for the electrical building, are prevented from propagating into the Control Building (C/B) via the Service Building. This is achieved by locating the access from the T/B to the S/B at or above grade level and providing a flood control doorway at the access location.

The T/B is not classified as a Seismic Category I structure. However, the building is designed such that damage to safety-related functions does not occur under seismic loads corresponding to the safe shutdown earthquake (SSE) ground acceleration.

Inspections, Tests, Analyses and Acceptance Criteria

Table 2.15.11 provides a definition of the inspections, tests, and/or analyses, together with associated acceptance criteria, which will be undertaken for the Turbine Building.

Table 2.15.11 Turbine Building

Inspections, Tests, Analyses and Acceptance Criteria		
Design Commitment	**Inspections, Tests, Analyses**	**Acceptance Criteria**
1. The basic configuration of the T/B is described in Section 2.15.11.	1. Inspections of the as-built structure will be conducted.	1. The as-built T/B conforms with the basic configuration described in Section 2.15.11.
2. The T/B is designed such that damage to safety-related functions does not occur under seismic loads corresponding to the SSE ground acceleration.	2. A seismic analysis of the as-built T/B will be performed.	2. A structural analysis report exists which concludes that under seismic loads corresponding to the SSE ground acceleration the as-built T/B does not damage safety-related functions.

2.15.12 Control Building

Design Description

The Control Building (C/B) is a structure which houses and provides protection and support for plant control and electrical equipment, batteries, portions of the Reactor Building Cooling Water (RCW) System, and C/B heating, ventilating and air conditioning equipment. The C/B is located between the Reactor and Turbine Buildings. Figures 2.15.12a through 2.15.12h show the basic configuration and scope of the C/B.*

The C/B is constructed of reinforced concrete and structural steel. The C/B is a shear-wall structure (which accommodates seismic loads) consisting of the perimeter walls, the steam-tunnel walls and the connected supporting floors. Columns and walls carry vertical loads to the basemat. The top of the C/B basemat is located 20.2m ±0.3m below the finished grade elevation.

The C/B, except for the main control area envelope, is divided into three separate divisional areas for mechanical and electrical equipment and four divisional areas for instrumentation and control equipment (including batteries). Interdivisional boundaries have the following features:

(1) Inter-divisional walls, floors, doors and penetrations , and penetrations in the external C/B walls to connecting tunnels, which have three-hour fire rating.

(2) Watertight doors to prevent flooding in one division from propagating to other divisions.

(3) Divisional walls in the basement are 0.6m thick or greater.

The main control area envelope is separated from the rest of the C/B by walls, floors, doors and penetrations which have three-hour fire rating.

Watertight doors between flood divisions have open/close sensors with status indication and alarms in the main control room.

The C/B flooding that results from component failures in any of the C/B divisions does not prevent safe shutdown of the reactor. The basement floor is the collection point for floods. Except for the basement and main control area envelope, safety-related electrical equipment and instrumentation and control equipment is located at least 20 centimeters above the floor surface. Level sensors are located in the basement area of each of the three mechanical divisions. These sensors send signals to the corresponding divisions of the Reactor Service Water (RSW) System indicating flooding in that division of the C/B. These sensors are located no higher than 1500 mm above the C/B basement floor.

* The overall building dimensions provided in Figures 2.15.12a through 2.15.12h are for information only and are not intended to be part of the certified ABWR information.

The basement area level sensors are powered from their respective divisional Class 1E power supply. Independence is provided between the Class 1E divisions for these sensors and also between the Class 1E divisions and non-Class 1E equipment.

To protect the C/B against an external flood the following design features are provided:

(1) External walls below flood level are equal to or greater than 0.6m thick to prevent ground water seepage.

(2) Penetrations in the external walls below flood level are provided with flood protection features.

Within the C/B, the steam tunnel has no penetrations from the steam tunnel into other areas of the C/B. The concrete thickness of the steam tunnel walls, floor and ceiling within the C/B is equal to or greater than 1.6m.

The C/B is classified as Seismic Category I. It is designed and constructed to accommodate the dynamic and static loading conditions associated with the various loads and load combinations which form the structural design basis. The loads are those associated with:

(1) Natural phenomena—wind, floods, tornadoes (including tornado missiles), earthquakes, rain and snow.

(2) Internal events—floods, pipe breaks and missiles.

(3) Normal plant operation—live loads, dead loads and temperature effects.

The steam tunnel is protected against pressurization effects that occur in the steam tunnel as a result of postulated rupture of pipes containing high energy fluid.

Systems, structures and components located in the C/B and classified as safety-related are protected against inter-divisional flooding that results from postulated failures in Seismic Category I or non-nuclear safety (NNS) components located in the C/B or from external flooding events. Each postulated flooding event is documented in a Flood Analysis Report which concludes the reactor can be shutdown safely and maintained in a safe, cold shutdown condition without offsite power.

Inspections, Tests, Analyses and Acceptance Criteria

Table 2.15.12 provides a definition of the inspections, tests, and/or analyses, together with associated acceptance criteria, which will be undertaken for the Control Building.

Redacted Security-Sensitive Information

Figure 2.15.12a Control Building Arrangement, Section A-A

Redacted Security-Sensitive Information

Figure 2.15.12b Control Building Arrangement, Section B-B

Redacted Security-Sensitive Information

Figure 2.15.12c Control Building Arrangement, Floor B4F—Elevation –8200 mm

Redacted Security-Sensitive Information

Figure 2.15.12d Control Building Arrangement, Floor B3F—Elevation –2150 mm

Redacted Security-Sensitive Information

Figure 2.15.12e Control Building Arrangement, Floor B2F—Elevation 3500 mm

Redacted Security-Sensitive Information

Figure 2.15.12f Control Building Arrangement, Floor B1F—Elevation 7900 mm

Redacted Security-Sensitive Information

Figure 2.15.12g Control Building Arrangement, Floor 1F—Elevation 12300 mm

Redacted Security-Sensitive Information

Figure 2.15.12h Control Building Arrangement, Floor 2F—Elevation 17150 mm

Table 2.15.12 Control Building

Inspections, Tests, Analyses and Acceptance Criteria		
Design Commitment	**Inspections, Tests, Analyses**	**Acceptance Criteria**
1. The basic configuration of the C/B is shown on Figures 2.15.12a through 2.15.12h.	1. Inspections of the as-built structure will be conducted.	1. The as-built C/B conforms with the basic configuration shown on Figures 2.15.12a through 2.15.12h.
2. The top of the C/B basemat is located 20.2m ±0.3m below the finished grade elevation.	2. Inspections of the as-built structure will be conducted.	2. The top of the C/B basemat is located 20.2m ±0.3m below the finished grade elevation.
3. Inter-divisional walls, floors, doors and penetrations, and penetrations in the external C/B walls to connecting tunnels, have a three-hour fire rating.	3. Inspections of the as-installed inter-divisional boundaries and external wall penetrations to connecting tunnels will be conducted.	3. The as-installed walls, floors, doors and penetrations that form the inter-divisional boundaries, and penetrations in the external C/B walls to connecting tunnels, have a three-hour fire rating.
4. The C/B has divisional areas with walls and watertight doors as shown on Figures 2.15.12a through 2.15.12h.	4. Inspections of the as-built walls, and doors will be conducted.	4. The as-built C/B has walls and watertight doors as shown on Figures 2.15.12a through 2.15.12h.
5. The main control area envelope is separated from the rest of the C/B by walls, floors, doors and penetrations which have a three-hour fire rating.	5. Inspections of the as-built structure will be conducted.	5. The as-built C/B has a main control area envelope separated from the rest of the C/B by walls, floors, doors and penetrations which have a three-hour fire rating.
6. Main control room displays and alarms provided for the C/B are as defined in Section 2.15.12.	6. Inspections will be performed on the main control room displays and alarms for the C/B.	6. Displays and alarms exist or can be retrieved in the main control room as defined in Section 2.15.12.
7. Except for the basement and main control area envelope, safety-related electrical equipment and instrumentation, and control equipment is located at least 20 cm above the floor surface.	7. Inspections will be conducted of the as-built equipment.	7. Except for the basement and main control area envelope, safety-related electrical equipment and instrumentation, and control equipment is located at least 20 cm above the floor surface.

Table 2.15.12 Control Building (Continued)

Inspections, Tests, Analyses and Acceptance Criteria		
Design Commitment	**Inspections, Tests, Analyses**	**Acceptance Criteria**
8. Level sensors are located in the basement area of each of the three mechanical divisions. These sensors are located no higher than 1500 mm above the C/B basement floor.	8. Inspections of the as-built equipment will be conducted.	8. Level sensors are located in the basement area of each of the three mechanical divisions. These sensors are located no higher than 1500 mm above the C/B basement floor.
9. The basement area level sensors are powered from their respective divisional Class 1E power supply. Independence is provided between the Class 1E divisions for these sensors and also between the Class 1E divisions and non-Class 1E equipment.	9. a. Tests will be conducted on the as-built sensors by providing a test signal in only one Class 1E division at a time. b. Inspections of the as-installed Class 1E divisions will be conducted.	9. a. The test signal exists only in the Class 1E division under test. b. Physical separation or electrical isolation exists between Class 1E divisions. Physical separation or electrical isolation exists between these Class 1E divisions and non-Class 1E equipment.
10. The C/B is protected against external floods by having: a. External walls below flood level equal to or greater than 0.6m thick to prevent ground water seepage. b. Penetrations in the external walls below flood level provided with flood protection features.	10. Inspections of the as-built structure will be conducted.	10. The C/B is protected against external floods by having: a. External walls below flood level equal to or greater than 0.6m thick to prevent ground water seepage. b. Penetrations in the external walls below flood level provided with flood protection features.
11. Within the C/B, the steam tunnel has no penetrations from the steam tunnel into other areas of the C/B.	11. Inspections of the as-built structure will be conducted.	11. Within the C/B, the steam tunnel has no penetrations from the steam tunnel into other areas of the C/B.
12. The concrete thickness of the steam tunnel walls, floor and ceiling within the C/B is equal to or greater than 1.6m.	12. Inspections of the as-built structure will be conducted.	12. The concrete thickness of the steam tunnel walls, floor and ceiling within the C/B is equal to or greater than 1.6m.

Table 2.15.12 Control Building (Continued)

Inspections, Tests, Analyses and Acceptance Criteria		
Design Commitment	**Inspections, Tests, Analyses**	**Acceptance Criteria**
13. The C/B is able to withstand the structural design basis loads as defined in Section 2.15.12.	13. A structural analysis will be performed which reconciles the as-built data with structural design basis as defined in Section 2.15.12.	13. A structural analysis report exists which concludes that the as-built C/B is able to withstand the structural design basis loads as defined in Section 2.15.12.
14. Systems, structures and components located in the C/B and classified as safety-related are protected against inter-divisional flooding that results from postulated failures in Seismic Category I or NNS related components located in the C/B or from external flooding events. Each postulated flooding event is documented in a Flood Analysis Report which concludes the reactor can be shutdown safely and maintained in a safe, cold shutdown condition without offsite power.	14. Inspections of the Flood Analysis Report and the as-built flood protection features will be conducted.	14. A Flood Analysis Report exists for the as-built C/B and concludes that for each postulated flooding event, the reactor can be shutdown safely and maintained in a safe, cold shutdown condition without offsite power. The Flood Analysis Report includes the results of inspections of the as-built flood protection features.

2.15.13 Radwaste Building

Design Description

The Radwaste Building (RW/B) is a structure which houses the solid and liquid radwaste treatment systems. The RW/B is classified as non-safety-related.

Flood conditions in the RW/B are prevented from propagating into the Reactor Building and Turbine Building by providing the penetrations in external walls below flood level with flood protection features.

A tunnel connects the Radwaste Building, Turbine Building, Control Building and Reactor Building for the liquid radwaste system piping. The penetrations from the tunnel to the Radwaste Building are watertight.

The external walls of the RW/B below grade and the basemat are designed and constructed to accommodate the dynamic and static loading conditions associated with the various loads and load combinations as described in Regulatory Guide 1.143. The loads are those associated with:

(1) Natural phenomena—wind, floods, tornados, earthquakes, rain and snow.

(2) Internal event—floods.

(3) Normal plant operations—live loads, dead loads and temperature effects.

The exterior walls above grade, the floor slabs, the interior columns and the roof are designed such that damage to safety-related functions does not occur under seismic loads corresponding to the safe shutdown earthquake (SSE) ground acceleration.

The tunnel connecting the Radwaste Building, Turbine Building, Control Building and Reactor Building is designed such that damage to penetration seals at the interface with safety-related structures does not occur under siesmic loads corresponding to the safe shutdown earthqake (SSE) ground acceleration. Flooding of this tunnel during design basis site flood conditions is prevented.

Inspections, Tests, Analyses and Acceptance Criteria

Table 2.15.13 provides a definition of the inspections, tests, and/or analyses, together with associated acceptance criteria, which will be undertaken for the Radwaste Building.

Table 2.15.13 Radwaste Building

Inspections, Tests, Analyses and Acceptance Criteria		
Design Commitment	**Inspections, Tests, Analyses**	**Acceptance Criteria**
1. The basic configuration of the RW/B is described in Section 2.15.13.	1. Inspections of the as-built structure will be conducted.	1. The as-built RW/B conforms with the basic configuration in Section 2.15.13.
2. The external walls of the RW/B below grade and the basemat are able to withstand the design basis loadings as defined in Section 2.15.13.	2. A structural analysis will be performed which reconciles the as-built data with the structural design basis as defined in Section 2.15.13.	2. A structural analysis report exists which concludes that the as-built RW/B is able to withstand the structural design basis loads as defined in Section 2.15.13.
3. The exterior walls above grade, the floor slabs, the interior columns and the roof are designed such that damage to safety-related functions does not occur under seismic loads corresponding to the SSE ground acceleration.	3. A seismic analysis will be performed.	3. A structural analysis report exists which concludes that under seismic loads corresponding to the SSE ground acceleration, the as-built RW/B does not damage safety-related functions.
4. The tunnel connecting the Radwaste Building, Turbine Building, Control Building, and Reactor Building is designed such that damage to penetration seals at the interface with safety-related structures does not occur under seismic loads corresponding to the safe shutdown earthquake (SSE) ground acceleration.	4. A seismic analysis will be performed.	4. A structural analysis report exists which concludes that under seismic loads corresponding to the SSE ground acceleration, the tunnel does not damage penetration seals at the interface with safety-related structures.

2.15.14 Service Building

Design Description

The Service Building (S/B) is a structure which houses the Technical Support Center, Operational Support Center, and the counting room for analyzing post-accident samples. The S/B is classified as non-safety-related. It is located adjacent to the Control Building.

The S/B is not classified as a Seismic Category I structure.

Inspections, Tests, Analyses and Acceptance Criteria

Table 2.15.14 provides a definition of the inspections, tests, and/or analyses, together with associated acceptance criteria, which will be undertaken for the Service Building.

Table 2.15.14 Service Building

Inspections, Tests, Analyses and Acceptance Criteria		
Design Commitment	**Inspections, Tests, Analyses**	**Acceptance Criteria**
1. The basic configuration of the S/B is described in Section 2.15.14.	1. Inspections of the as-built structure will be conducted.	1. The as-built S/B conforms with the basic configuration described in Section 2.15.14.