2.2 Control and Instrument Systems

2.2.1 Rod Control and Information System

Design Description

The Rod Control and Information System (RCIS) controls and monitors positioning of the control rods in the reactor by the fine motion control rod drive (FMCRD) units of the Control Rod Drive (CRD) System. The RCIS controls rod position to accomplish power changes in the reactor core and to achieve compliance with fuel thermal limits, core thermal-hydraulic stability limits and required FMCRD movements following reactor scram and anticipated transients without scram (ATWS) events.

The RCIS consists of redundant microprocessor-based controllers* and the equipment required to monitor and control the FMCRD. The RCIS can operate in either manual, semi-automatic or automatic control mode and has the control interfaces shown on Figure 2.2.1.

The RCIS is classified as non-safety-related.

The RCIS provides the following:

(1) A rod worth minimizer which uses control rod position signals to enforce preestablished sequences for control rod movement when the reactor power (neutron flux) is below the low power setpoint by issuing a control rod block signal when an out of sequence control rod movement is attempted.

(2) An automated thermal limit monitor (ATLM) which uses control rod position signals, neutron flux signals, and fuel operating thermal limits to enforce fuel thermal limits when the reactor power is above the low power setpoint and the plant is in automatic operation.

(3) A selected control rod run-in function which uses a signal from the Recirculation Flow Control (RFC) System to insert selected control rods into the core.

(4) An automatic control rod run-in which uses a scram-follow signal from the Reactor Protection System (RPS) to insert all control rods into the core.

(5) An alternate rod insertion (ARI) function which uses signals from the RFC System to insert all control rods into the core.

* Except for controllers associated with individual FMCRDs.

(6) An automatic control rod withdrawal block in response to:

(a) A signal from the Neutron Monitoring System (NMS) multi-channel rod block monitor (MRBM), at above the low power setpoint (LPSP), or

(b) A signal from the CRD System FMCRD hollow piston/ball nut separation switches (withdrawal block applies only to separated control rod), or

(c) A signal from the RPS Mode Switch, when in Refuel Mode, that only permits the two control rods associated with the same hydraulic control unit (HCU) being withdrawn from the core at any time.

(7) A permissive signal to the Refueling Equipment to prevent hoisting a fuel bundle over the reactor pressure vessel unless all control rods are inserted.

(8) A runback signal to adjustable speed drives (ASD) of RFC System when RCIS initiates signals to insert all control rods.

The RCIS equipment is located in the Reactor Building and Control Building.

The RCIS is powered by two non-Class 1E uninterruptible power supplies.

Inspections, Tests, Analyses and Acceptance Criteria

Table 2.2.1 provides a definition of the inspections, tests, and/or analyses, together with associated acceptance criteria, which will be undertaken for the RCIS.

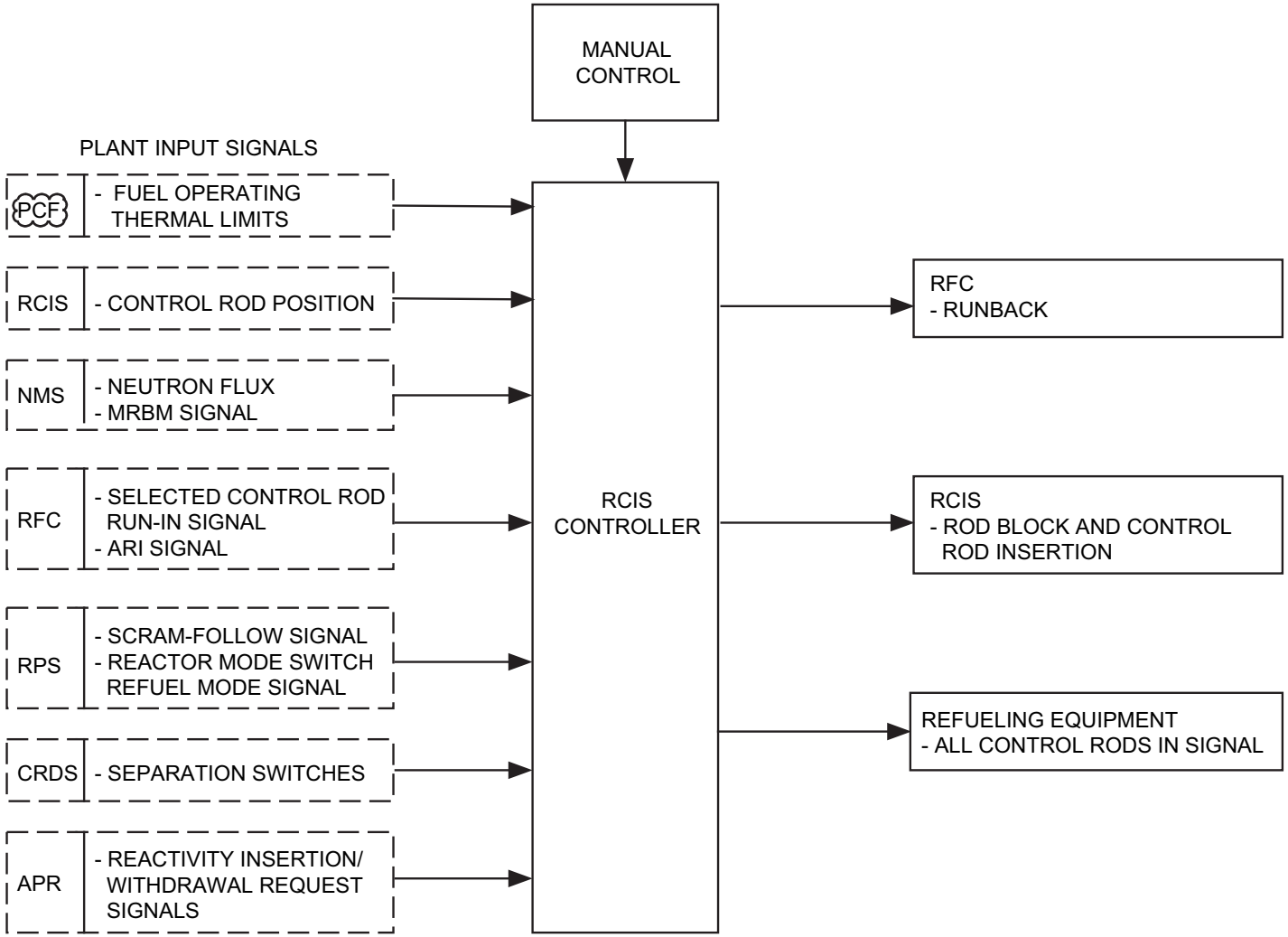

NOTE:
1. INTERCONNECTIONS MAY BE FIBER-OPTIC OR METALLIC.

Figure 2.2.1 Rod Control and Information System Control Interface Diagram

Table 2.2.1 Rod Control and Information System

Inspections, Tests, Analyses and Acceptance Criteria		
Design Commitment	**Inspection, Tests, Analyses**	**Acceptance Criteria**
1. The equipment comprising the RCIS is defined in Section 2.2.1.	1. Inspections of the as-built system will be conducted.	1. The as-built RCIS conforms with the description in Section 2.2.1.
2. The RCIS consists of redundant microprocessor based controllers (except for controllers associated with individual FMCRDs).	2. Tests will be performed by simulating failure of each operating RCIS controller.	2. There is no loss of RCIS output upon loss of any one controller.
3. The RCIS provides a rod worth minimizer which uses control rod position signals to enforce preestablished sequences for control rod movement when the reactor power (neutron flux) is below the low power setpoint by issuing a control rod block signal when an out of sequence control rod movement is attempted.	3. Tests will be conducted on the RCIS using simulated control rod position signals, and simulated neutron flux signals.	3. A control rod block signal occurs when an out-of-sequence control rod movement is simulated and when reactor power is below the low power setpoint.
4. The RCIS provides an ATLM which uses control rod position signals, neutron flux signals, and fuel operating thermal limits to enforce fuel thermal limits when the reactor power is above the low power setpoint and the plant is in automatic operation.	4. Tests will be conducted on the RCIS using simulated control rod position signals, neutron flux signals, and fuel operating thermal limits.	4. A control rod block signal occurs upon simulation of a control rod movement which would cause fuel thermal limits to be approached.
5. The RCIS provides a selected control rod run-in function which uses a signal from the RFC System to insert selected control rods into the core.	5. Tests will be conducted on the RCIS using simulated control rod run-in signal from RFC System.	5. A control rod insertion signal occurs for those positions assigned to this function upon receipt of a simulated signal from the RFC System.
6. The RCIS provides an automatic control rod run-in which uses a scram-follow signal from the RPS to insert all control rods into the core.	6. Tests will be conducted on the RCIS using a simulated scram-follow signal from the RPS.	6. A control rod run-in signal occurs upon receipt of a simulated scram-follow signal.

Table 2.2.1 Rod Control and Information System (Continued)

Inspections, Tests, Analyses and Acceptance Criteria		
Design Commitment	**Inspection, Tests, Analyses**	**Acceptance Criteria**
7. The RCIS provides an ARI function which uses signals from the RFC System to insert all control rods into the core.	7. Tests will be conducted on the RCIS using simulated ARI signals from the RFC System.	7. A control rod insertion signal occurs upon receipt of a simulated ARI signal.
8. The RCIS provides an automatic control rod withdrawal block in response to: a. A signal from the NMS MRBM at above the low power setpoint. b. A signal from the CRD System FMCRD hollow piston/ball nut separation switches (withdrawal block applies only to separated control rod). c. A signal from the RPS Mode Switch when in Refuel Mode that only permits the two control rods associated with the same HCU being withdrawn from the core at anytime.	8. Tests will be conducted on the RCIS using simulated signals from the NMS MRBM at above low power setpoint; and from the FMCRD separation switches; and from control rods of the same HCU and Refuel Mode position of RPS Mode Switch.	8. A control rod withdrawal block signal occurs upon receipt of simulated signals from: a. NMS MRBM at above the low power setpoint, b. FMCRD separation switches (withdrawal block is only applicable to separated control rod), c. An attempt to withdraw a control rod, when the RPS mode switch is in Refuel Mode and the two control rods associated with the same HCU are withdrawn.
9. The RCIS provides a permissive signal to the Refueling Equipment to prevent hoisting a fuel bundle over the reactor pressure vessel unless all control rods are inserted.	9. Tests will be conducted on the RCIS using simulated rod position information.	9. A permissive signal to the Refueling Equipment occurs only when the simulated signals indicate that all control rods are inserted. No signal occurs when any rod is signalled as not inserted.
10. The RCIS provides a runback signal to RFC System ASDs when RCIS initiates signals to insert all control rods.	10. Tests will be conducted on the RCIS using simulated control rods insertion signals.	10. RFC System ASD runback signals occur upon receipt of simulated signals to insert all control rods.
11. The RCIS is powered by two non-Class 1E uninterruptible power supplies, such that both channels of the RCIS remain operational if either supply is operational with the non-operational supply in an alarmed condition.	11. Tests will be performed on the as-built RCIS by removing each power supply from service one at a time.	11. An alarm is activated by the inoperable power supply and both channels of the RCIS remain operational.

2.2.2 Control Rod Drive System

Design Description

The Control Rod Drive (CRD) System controls changes in core reactivity during power operation by movement and positioning of the neutron absorbing control rods within the core in fine increments in response to control signals from the Rod Control and Information System (RCIS). The CRD System provides rapid control rod insertion (scram) in response to manual or automatic signals from the Reactor Protection System (RPS). Figure 2.2.2 shows the basic system configuration and scope.

The CRD System consists of three major elements: (1) the electro-hydraulic fine motion control rod drive (FMCRD) mechanisms, (2) the hydraulic control unit (HCU) assemblies, and (3) the control rod drive hydraulic system (CRDHS). The FMCRDs provide electric-motor-driven positioning for normal insertion and withdrawal of the control rods and hydraulic-powered rapid control rod insertion (scram) for abnormal operating conditions. Simultaneous with scram, the FMCRDs also provide electric-motor driven run-in of control rods as a path to rod insertion that is diverse from the hydraulic-powered scram. The hydraulic power required for scram is provided by high pressure water stored in the individual HCUs. An HCU can scram two FMCRDs. It also provides the flow path for purge water to the associated drives during normal operation. The CRDHS supplies pressurized water for charging the HCU scram accumulators and purging to the FMCRDs.

There are 205 FMCRDs mounted in housings welded into the reactor vessel bottom head. The FMCRD has a movable hollow piston tube that is coupled at its upper end, inside the reactor vessel, to the bottom of a control rod. The FMCRD can move the control rod up or down over its entire range, by a ball nut and ball screw driven at a speed of 30 mm/s ±10% by the electric stepper motor. In response to a scram signal, the piston inserts the control rod into the core hydraulically using stored energy in the HCU scram accumulator. The scram water is introduced into the drive through a scram inlet connection on the FMCRD housing, and is then discharged directly into the reactor vessel via clearances between FMCRD parts. The average scram times of all FMCRDs with the reactor pressure as measured at the vessel bottom below 7.48 MPaG are:

Percent Insertion	Time (s)
10	≤ 0.42
40	≤ 1.00

Percent Insertion	Time (s)
60	≤ 1.44
100	≤ 2.80

These times are measured starting from loss of signal to the scram solenoid pilot valves in the HCUs.

The FMCRD has an electro-mechanical brake with a minimum holding torque of 49 N·m on the motor drive shaft and a ball check valve at the point of connection with the scram inlet line.

Two redundant and separate switches in the FMCRD detect separation of the hollow piston from the ball nut.

There are 103 HCUs, each of which provides water stored in a pre-charged accumulator for scramming two FMCRDs. Figure 2.2.2 shows the major HCU components. The accumulator is connected to its associated FMCRDs by a hydraulic line that includes a scram valve held closed by pressurized control air. To cause a scram, the RPS provides a signal to de-energize the scram solenoid pilot valve (SSPV)that vents the control air from the scram valve, which then opens by spring action. Loss of either electrical power to the SSPV or loss of control air pressure causes scram. A pressure switch detects low accumulator gas pressure and actuates an alarm in the main control room.

The CRD System also provides alternate rod insertion (ARI) as a means of actuating hydraulic scram when an anticipated transient without scram (ATWS) condition exists. Following receipt of an ARI signal, solenoid valves on the scram air header open to reduce pressure in the header, allowing the HCU scram valves to open. The control rod drives then insert the control rods hydraulically.

The CRDHS has pumps, valves, filters, instrumentation, and piping to supply pressurized water for charging the HCUs and purging the FMCRDs.

The CRD System components classified as safety-related are: the HCU components required for scram; the FMCRD components required for scram; the scram inlet piping; the FMCRD reactor coolant primary pressure boundary components; the FMCRD brake and ball check valve; the internal drive housing support; the FMCRD separation switches; and the HCU charging water header pressure instrumentation.

The CRD System components classified as Seismic Category I are: the HCU components required for scram; the FMCRD components required for scram; the scram inlet piping; the FMCRD reactor coolant primary pressure boundary components; the FMCRD brake and ball check valve; the internal drive housing support; the FMCRD separation switches; and the HCU charging water header pressure instrumentation.

Figure 2.2.2 shows the ASME Code class for the CRD System piping and components.

The CRD System is located in the Reactor Building. The FMCRDs are mounted to the reactor vessel bottom head inside primary containment. The HCUs and CRDHS equipment are located in the Reactor Building at the basemat elevation.

Each of the four divisional HCU charging header pressure sensors are powered from their respective divisional Class 1E power supply. Independence is provided between the Class 1E divisions for these sensors and also between the Class 1E divisions and non-Class 1E equipment.

For the FMCRD separation switches, independence is provided between the Class 1E divisions and also between the Class 1E divisions and non-Class 1E equipment.

For their preferred source of power, the FMCRDs are collectively powered from one Class 1E division; for their alternate source of power, they are collectively powered from one non-Class 1E Plant Investment Protection (PIP) bus.

The hydraulic portion of the CRD System which performs the scram function is physically separated from and independent of the Standby Liquid Control System.

The CRD System has the following alarms, displays, and controls in the main control room:

(1) Alarms for separation of the hollow piston from the ball-nut and low HCU accumulator gas pressure.

(2) Parameter displays for the instruments shown in Figure 2.2.2.

(3) Controls and status indication for the CRD pumps and flow control valves shown on Figure 2.2.2.

(4) Status indication for the scram valve position.

The following CRD System safety-related electrical equipment are located in either the Reactor Building or primary containment and are qualified for a harsh environment: the HCU charging header pressure instrumentation, the scram solenoid pilot valves, and FMCRD separation switches.

The check valves (CVs) shown inside the HCU boundary on Figure 2.2.2 and the FMCRD ball check valves have active safety-related functions to close under system pressure, fluid flow, and temperature conditions.

The piping and components of the CRD pump suction supply, which extends from the CRD System interfaces with the Condensate Feedwater and Air Extraction (CFCAE) System and

Makeup Water (Condensate) (MUWC) System to the inlet connections of the CRD pumps, are designed for 2.82 MPaG for intersystem loss-of-coolant accident (ISLOCA) conditions.

Inspections, Tests, Analyses and Acceptance Criteria

Table 2.2.2 provides a definition of the inspections, tests, and/or analyses, together with associated acceptance criteria, which will be undertaken for the CRD System.

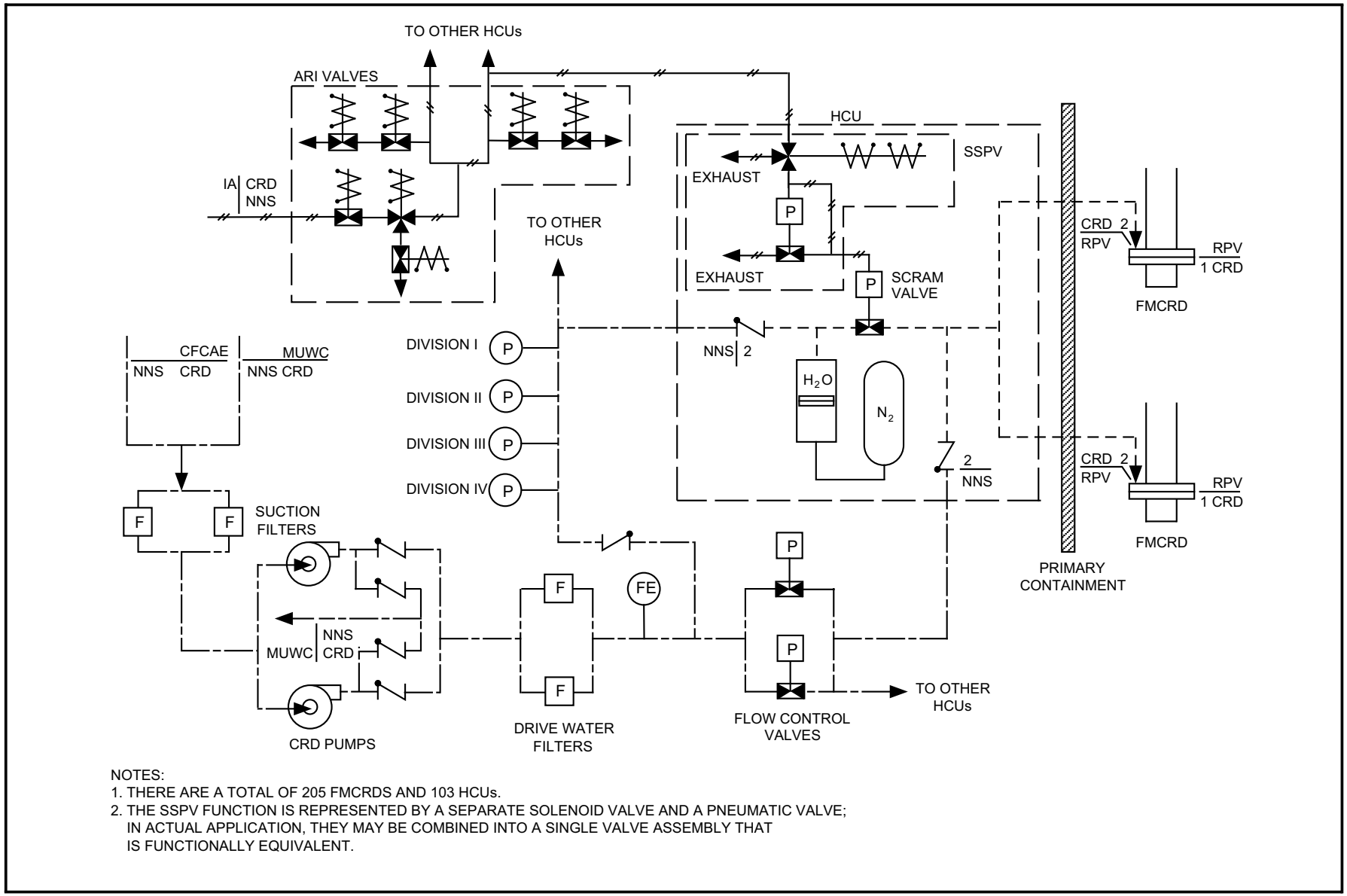

NOTES:
1. THERE ARE A TOTAL OF 205 FMCRDS AND 103 HCUs.
2. THE SSPV FUNCTION IS REPRESENTED BY A SEPARATE SOLENOID VALVE AND A PNEUMATIC VALVE; IN ACTUAL APPLICATION, THEY MAY BE COMBINED INTO A SINGLE VALVE ASSEMBLY THAT IS FUNCTIONALLY EQUIVALENT.

Figure 2.2.2 Control Rod Drive System

Table 2.2.2 Control Rod Drive System

Inspections, Tests, Analyses and Acceptance Criteria		
Design Commitment	**Inspections, Tests, Analyses**	**Acceptance Criteria**
1. The basic configuration of the CRD System is as shown on Figure 2.2.2.	1. Inspections of the as-built system will be conducted.	1. The as-built CRD System conforms with the basic configuration shown on Figure 2.2.2.
2. The ASME Code components of the CRD System retain their pressure boundary integrity under internal pressures that will be experienced during service.	2. A hydrostatic test will be conducted on those code components of the CRD System required to be hydrostatically tested by the ASME Code.	2. The results of the hydrostatic test of the ASME Code components of the CRD System conform with the requirements in the ASME Code, Section III.
3. The FMCRD can move the control rod up or down over its entire range by a ball nut and ball screw driven at a speed of 30 mm/s ±10% by the electric stepper motor.	3. Tests will be conducted on each installed FMCRD.	3. Each control rod moves up and down over its entire range at a speed of 30 mm/s ±10%. The time to insert each control rod from full-out to full-in is ≤ 135 seconds when driven by the electric stepper motor.
4. The average scram times of all FMCRDs with the reactor pressure as measured at the vessel bottom below 7.48 MPaG are: Percent Insertion — Time (s) 10 — ≤ 0.42 40 — ≤ 1.00 60 — ≤ 1.44 100 — ≤ 2.80 These times are measured starting from loss of signal to the scram solenoid pilot valves in the HCU.	4. Tests will be conducted on each installed HCU and its associated FMCRD. The results of the tests performed at low reactor pressure will be extrapolated to the Design Commitment pressure (7.48 MPaG).	4. The average scram times of all FMCRDs with the reactor pressure as measured at the vessel bottom below 7.48 MPaG are: Percent Insertion — Time (s) 10 — ≤ 0.42 40 — ≤ 1.00 60 — ≤ 1.44 100 — ≤ 2.80 These times are measured starting from loss of signal to the scram solenoid pilot valves in the HCU
5. The FMCRD has an electro-mechanical brake with a minimum holding torque of 49 N·m on the motor drive shaft.	5. Tests of each FMCRD brake will be conducted in a test facility.	5. The FMCRD electro-mechanical brake has a minimum holding torque of 49 N·m on the motor drive shaft.

Table 2.2.2 Control Rod Drive System (Continued)

Inspections, Tests, Analyses and Acceptance Criteria		
Design Commitment	**Inspections, Tests, Analyses**	**Acceptance Criteria**
6. Two redundant and separate switches in the FMCRD detect separation of the hollow piston from the ball nut.	6. Tests of each as-built FMCRD will be conducted.	6. Both switches in each FMCRD detect separation of the hollow piston from the ball nut.
7. Following receipt of an ARI signal, solenoid valves on the scram air header open to reduce pressure in the header, allowing the HCU scram valves to open.	7. Tests will be conducted on the as-built ARI valves using a simulated actuation signal.	7. Following receipt of a simulated ARI signal, solenoid valves on the scram air header open to reduce pressure in the header, allowing the HCU scram valves to open.
8. Each of the four divisional HCU charging header pressure sensors are powered from their respective divisional Class 1E power supply. For the four HCU charging water header pressure sensors, independence is provided between Class 1E divisions, and between Class 1E divisions and non-Class 1E equipment.	8. a. Tests will be conducted on the as-built charging water header sensors by providing a test signal in only one Class 1E division at a time. b. Inspections of the as-installed charging water header sensor Class 1E divisions will be conducted.	8. a. The test signal exists only in the Class 1E Division under test. b. Physical separation or electrical isolation exists between Class 1E divisions. Physical separation or electrical isolation exists between these Class 1E divisions and non-Class 1E equipment.
9. For the FMCRD separation switches, independence is provided between the Class 1E divisions and also between the Class 1E divisions and non-Class 1E equipment.	9. Inspections of the as-installed Class 1E divisions in the CRD System will be performed.	9. In the CRD System, physical separation or electrical isolation exists between Class 1E divisions. Physical separation or electrical isolation exists between Class 1E divisions and non-Class 1E equipment.
10. For their preferred source of power, the FMCRDs are collectively powered from one Class 1E division; for their alternate source of power, they are collectively powered from one non-Class 1E PIP bus.	10. Inspections of the as-built CRD System will be conducted.	10. For their preferred source of power, the FMCRD motors are collectively powered from one Class 1E division; for their alternate source of power, they are collectively powered from one non-Class 1E PIP bus.

Table 2.2.2 Control Rod Drive System (Continued)

Inspections, Tests, Analyses and Acceptance Criteria		
Design Commitment	**Inspections, Tests, Analyses**	**Acceptance Criteria**
11. Main control room alarms, displays and controls provided for the CRD System are defined in Section 2.2.2.	11. Inspections will be performed on the main control room alarms, displays and controls for the CRD System.	11. Alarms, displays and controls exist or can be retrieved in the main control room as defined in Section 2.2.2.
12. CVs designated in Section 2.2.2 as having an active safety-related function close under system pressure, fluid flow, and temperature conditions.	12. Tests of installed valves for closing will be conducted under system preoperational pressure, fluid flow, and temperature conditions.	12. Each CV closes.

2.2.3 Feedwater Control System

Design Description

The Feedwater Control (FDWC) System controls the flow of feedwater into the reactor pressure vessel (RPV) to maintain the water level in the vessel during plant operation. The FDWC System consists of redundant, microprocessor-based controllers, and flow sensors for main steamlines and feedwater lines, as shown in the control interface diagram in Figure 2.2.3.

The FDWC digital controllers determine narrow range level signal using three reactor level measurement inputs from the NBS.

The steam flow in each of four main steamlines is sensed at the RPV nozzle venturis. These measurements are processed in the digital controllers to calculate the total steam flow out of the vessel.

Feedwater flow is sensed at a flow element in each of the two feedwater lines. These measurements are processed in the digital controllers to calculate the total feedwater flow into the vessel.

The FDWC System is classified as non-safety-related.

The FDWC System operates in either manual, automatic single-element or automatic three-element control modes. At low feedwater flow, the FDWC System utilizes only water level measurement in automatic single-element control mode. At higher flow rates, the FDWC System in three-element control mode uses water level, steam flow, and feedwater flow measurements for water level control.

The FDWC System monitors reactor water level signals and, if a high RPV water level setpoint is reached, sends trip signals to the Turbine Control System and to the Condensate, Feedwater and Condensate Air Extraction (CFCAE) System. If a low RPV water level setpoint is reached, the FDWC System sends trip signals to the Recirculation Flow Control (RFC) System.

If the FDWC System receives an anticipated transient without scram (ATWS) trip signal from the Safety System Logic and Control (SSLC), the FDWC System issues signals to runback feedwater flow.

Each channel of the FDWC System is powered by separate non-Class 1E uninterruptible power supplies.

Digital controllers used for the FDWC System are redundant, with diagnostic capabilities that identify and isolate failure of level input signals.

Inspections, Tests, Analyses and Acceptance Criteria

Table 2.2.3 provides a definition of the inspections, tests, and/or analyses, together with associated acceptance criteria, which will be undertaken for the Feedwater Control System.

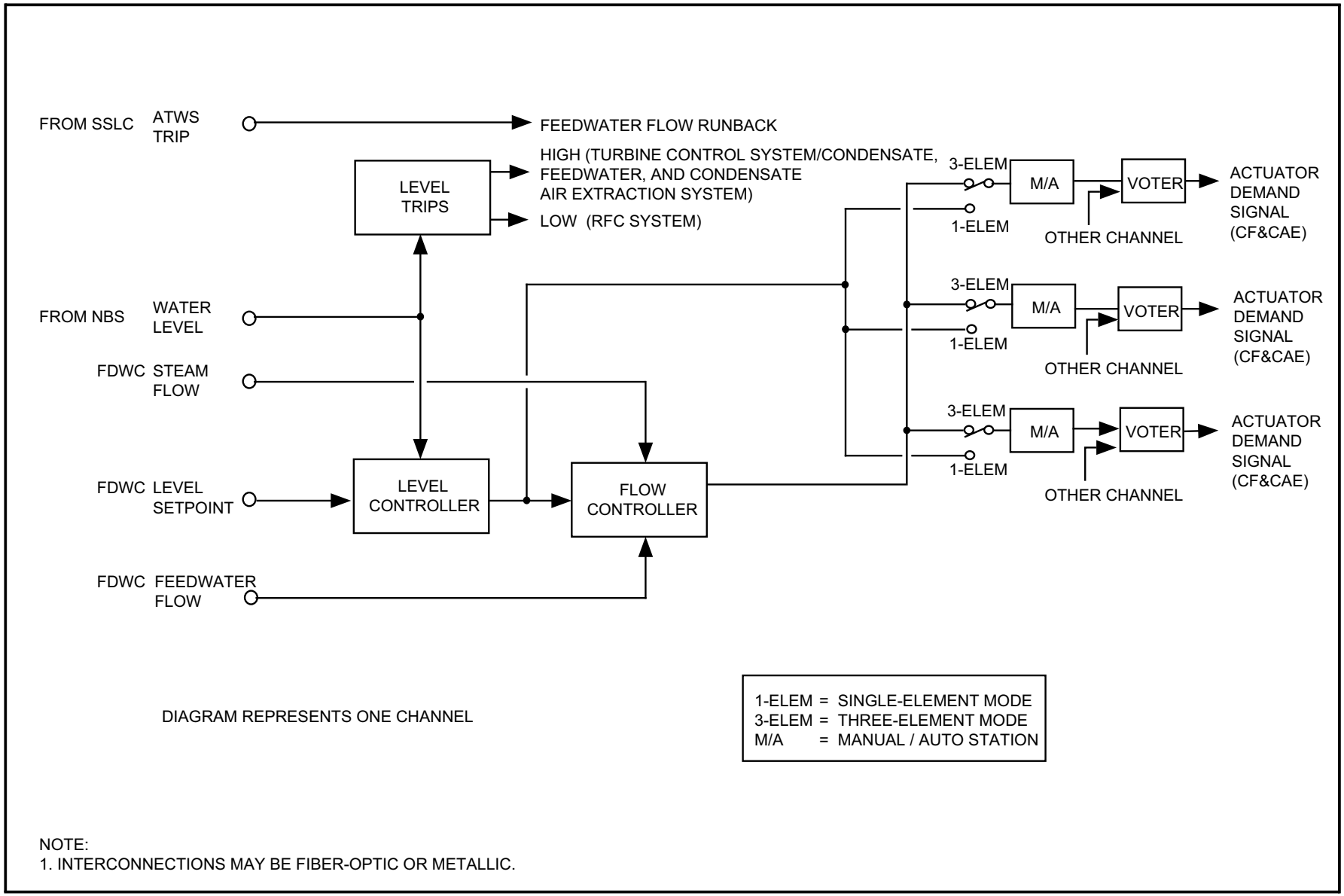

Figure 2.2.3 Feedwater Control System Control Interface Diagram

Table 2.2.3 Feedwater Control System

Inspections, Tests, Analyses and Acceptance Criteria		
Design Commitment	**Inspections, Tests, Analyses**	**Acceptance Criteria**
1. The equipment comprising the FDWC System is defined in Section 2.2.3.	1. Inspections of the as-built system will be conducted.	1. The as-built FDWC System conforms with the description in Section 2.2.3.
2. The FDWC System controls the flow of feedwater into the RPV.	2. A test will be performed by simulating a decreasing reactor level signal.	2. A signal to increase feedwater flow occurs.
3. The FDWC System monitors reactor water level signals and, if a high RPV water level setpoint is reached, sends trip signals to the Turbine Control System and to the CFCAE System. If a low RPV water level setpoint is reached, the FDWC System sends trip signals to the RFC System.	3. Tests will be performed on the FDWC System, using simulated RPV water level signals.	3. When a high RPV water level setpoint is reached, trip signals are sent to the Turbine Control System and CFCAE System. When a low RPV water level setpoint is reached, a trip signal is sent to the RFC System.
4. If the FDWC System receives an ATWS trip signal from the SSLC, FDWC issues signals to runback feedwater flow.	4. Tests will be performed on the FDWC System, using a simulated ATWS trip signal.	4. When an ATWS trip signal is received, the FDWC System issues feedwater runback signals.
5. The FDWC System digital controllers are powered by separate non-Class 1E uninterruptible power supplies.	5. Tests will be performed by providing a test signal in only one non-Class 1E uninterruptible power supply at a time.	5. The test signal exists in only one digital control channel at a time.
6. Main control room controls and displays provided for the FDWC System are defined in Section 2.2.3.	6. Inspections will be performed on the main control room controls and displays for the FDWC System.	6. Controls and displays exist or can be retrieved in the main control room as defined in Section 2.2.3.
7. Digital controllers used for the FDWC System are redundant.	7. Tests will be performed by simulating failure of each operating FDWC System digital controller.	7. There is no loss of FDWC System output upon loss of any one digital controller.
8. Digital controllers used for the FDWC System have diagnostic capabilities that identify and isolate failure of level input signals.	8. Tests will be performed by simulating level input signal failures to the FDWC System digital controllers.	8. There is no loss of FDWC System output upon loss of any one level input signal.

2.2.4 Standby Liquid Control System

The Standby Liquid Control (SLC) System injects neutron absorbing poison into the reactor using a boron solution, thus providing the safety-related function of backup reactor shutdown capability independent of the normal reactivity control system based on insertion of control rods into the core. The SLC System is designed to bring the reactor from full power to a subcritical condition without control rod movement, at any time in a core cycle, and at design basis conditions with the reactor in the most reactive xenon-free state. The SLC System operates over a range of reactor pressure conditions which bound the elevated pressures associated with an anticipated transient without scram (ATWS). Figure 2.2.4 shows the basic system configuration and scope.

The SLC System consists of a boron solution storage tank, two positive displacement pumps, two motor-operated injection valves which are provided in parallel for redundancy, and associated piping and valves used to transfer borated water from the storage tank to the reactor pressure vessel (RPV). The borated solution is discharged through the high pressure core flooder (HPCF) Division B subsystem sparger.

The SLC System uses a dissolved solution of sodium pentaborate as the neutron-absorbing poison. This solution is held in the storage tank which has a heater to maintain solution temperature above the saturation temperature. The heater has automatic actuation and automatic shutoff.

A test tank and associated piping and valves permit testing of the SLC System during plant operation. The tank is supplied with demineralized water, which is pumped in either a closed loop or is injected into the reactor.

Key SLC System equipment performance requirements are:

(1)	Pump flow (minimum)	378 L/min with both pumps operating 189 L/min with one pump operating
(2)	Maximum reactor pressure (for injection)	8.72 MPaA
(3)	Pumpable volume in storage tank (minimum)	23.1 m^3

The SLC System can be manually initiated from the main control room. Each of the two divisions is controlled by a separate switch. When it is manually initiated to inject a liquid neutron absorber into the reactor, the following devices and actions are initiated by each divisional switch:

(1) The specified division injection valve is opened.

(2) The specified division storage tank discharge valve is opened.

(3) The specified division injection pump is started.

(4) The reactor water cleanup isolation valves are closed.

Both divisions of the SLC System are automatically initiated during an ATWS condition by safety system and logic control (SSLC) logic. With the storage tank at minimum level and both pumps operating, the system is designed to inject the minimum required boron solution.

Each SLC System pump has an interlock which prevents operation if both the test tank outlet valve and the pump suction valve are closed.

The SLC System provides borated water to the reactor core to compensate for the various reactivity effects. These effects are xenon decay, elimination of steam voids, changing water density due to the reduction in water temperature, Doppler effect in uranium, changes in neutron leakage, and changes in control rod worth. To meet this objective, it is necessary to inject a quantity of boron which produces a minimum concentration of 850 parts per million (ppm) by weight of natural boron in the reactor core at 20°C. To allow for potential leakage and imperfect mixing in the reactor system, an additional approximately 25% (220 ppm) is added to the above requirement, resulting in a total requirement of greater than or equal to 1070 ppm. The required concentration is thus achieved in a mass of water equal to the sum of the mass of water in the RPV at normal water level (equal to or less than 455 x 10^3 kg) plus the mass of water in the RPV shutdown cooling piping (equal to or less than 130 x 10^3 kg). The quantity of boron solution contained in the storage tank above the pump suction shutoff level provides the required concentration of 1070 ppm when injected into the reactor.

The SLC System pumps have sufficient net positive suction head (NPSH) available at the pump. The SLC System pumps are designed to produce discharge pressure to inject the solution into the reactor when the reactor is at pressure conditions corresponding to the system relief valve (10.79 MPaG), which is above peak ATWS pressure in the RPV.

SLC System components required for RPV injection are classified as Seismic Category I.

Figure 2.2.4 shows the ASME Code class for the SLC System piping and components.

The SLC System is located in the Reactor Building. The storage tank, test water tank, the two positive displacement pumps, and associated valving are located in the secondary containment on the floor elevation below the operating floor.

Each of the two SLC System divisions is powered from the respective Class 1E division as shown on Figure 2.2.4. The power supplied to one motor-operated injection valve, suction valve, and injection pump is powered from Division I. The power supply to the other motor-operated injection valve, suction valve, and injection pump is powered from Division II. In the

SLC system, independence is provided between Class 1E divisions, and also between Class 1E divisions and non-Class 1E equipment.

The SLC System has the following displays, controls and alarms in the main control room:

- Alarms for storage tank temperature and level.
- Parameter displays for the instruments shown on Figure 2.2.4.
- Controls and status indication for the pumps, injection valves, and suction valves.
- A manual system initiation switch for each division.

The motor-operated valves (MOVs) shown on Figure 2.2.4 have an active safety-related function and perform this function under differential pressure, fluid flow and temperature conditions.

The check valves (CVs) shown on Figure 2.2.4 have active safety-related functions to open, close, or both open and close under system pressure, fluid flow, and temperature conditions.

The SLC System is physically separated from and independent of the hydraulic portion of the Control Rod Drive (CRD) System.

The piping and components on the suction side of the pumps up to and including the suction valves and the test loop up to the test tank inlet valve have a design pressure of 2.82 MPaG for intersystem LOCA (ISLOCA) conditions.

Inspections, Tests, Analyses and Acceptance Criteria

Table 2.2.4 provides a definition of the inspections, tests, and/or analyses, together with associated acceptance criteria, which will be undertaken for the SLC System.

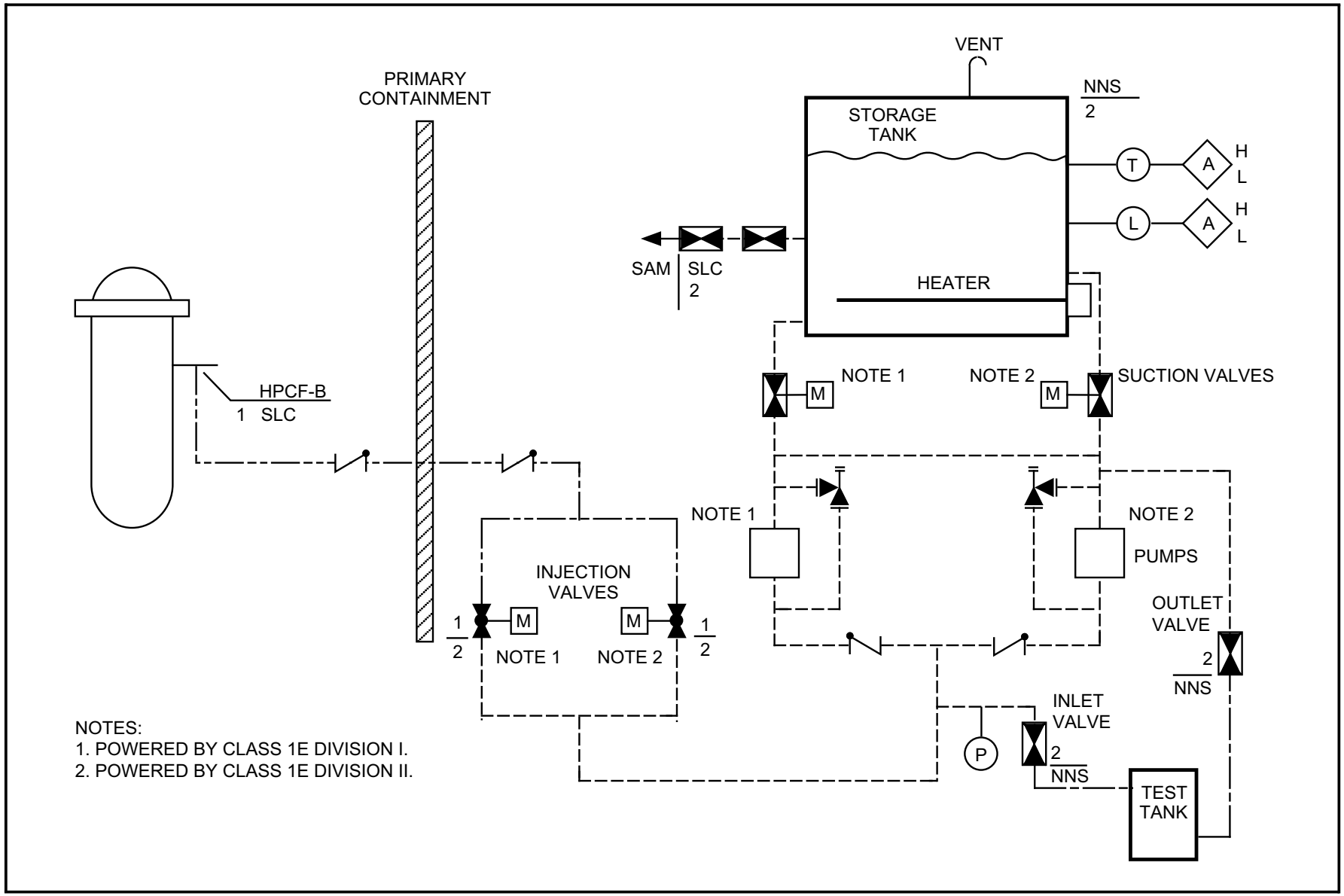

Figure 2.2.4 Standby Liquid Control System

Table 2.2.4 Standby Liquid Control System

Inspections, Tests, Analyses and Acceptance Criteria		
Design Commitment	**Inspections, Tests, Analyses**	**Acceptance Criteria**
1. The basic configuration of the SLC System is shown in Figure 2.2.4.	1. Inspections of the as-built system will be conducted.	1. The as-built SLC System conforms with the basic configuration shown in Figure 2.2.4.
2. The ASME Code components of the SLC System retain their pressure boundary integrity under internal pressures that will be experienced during service.	2. A hydrostatic test will be conducted on those Code components of the SLC System that are required to be hydrostatically tested by the ASME Code.	2. The results of the hydrostatic test of the ASME Code components of the SLC System conform with the requirements in the ASME Code, Section III.
3.	3.	3.
a. A test tank and associated piping and valves permit testing of the SLC System during plant operation. The tank is supplied with demineralized water, which is pumped in either a closed loop or is injected into the reactor.	a. Tests will be conducted on each division of the as-built SLC System using installed controls, power supplies and other auxiliaries. The following tests will be conducted:	a.
	(1) Demineralized water will be pumped against a pressure greater than or equal to 8.72 MPaA in a closed loop on the test tank.	(1) Demineralized water is pumped with a flow rate greater than or equal to 189 L/min in the closed loop.
	(2) Demineralized water will be injected from the test tank into the reactor.	(2) Demineralized water is injected from the test tank into the reactor.
b. The SLC System delivers at least 378 L/min of solution with both pumps operating when the reactor pressure is less than or equal to 8.72 MPaA.	b. Tests will be conducted on the as-built SLC System using installed controls, power supplies and other auxiliaries. Demineralized water will be injected from the storage tank into the reactor with both pumps running against a discharge pressure of greater than or equal to 8.72 MPaA.	b. The SLC System injects greater than or equal to 378 L/min into the reactor with both pumps running against a discharge pressure of greater than or equal to 8.72 MPaA.

Table 2.2.4 Standby Liquid Control System (Continued)

Inspections, Tests, Analyses and Acceptance Criteria		
Design Commitment	**Inspections, Tests, Analyses**	**Acceptance Criteria**
c. The SLC System delivers at least 189 L/min of solution with either pump operating when the reactor pressure is less than or equal to 8.72 MPaA.	c. Tests will be conducted on the as-built SLC System using installed controls, power supplies and other auxiliaries. Demineralized water will be injected from the storage tank into the reactor with one pump running against a discharge pressure of greater than or equal to 8.72 MPaA.	c. The SLC System injects greater than or equal to 189 L/min into the reactor with either pump running against a discharge pressure greater than or equal to 8.72 MPaA.
d. The SLC System can be manually initiated from the main control room.	d. Tests will be conducted on the as-built SLC System using the manual initiation switch.	d. Each division of the SLC System initiates when the manual initiation switch for that division is actuated.
e. Both divisions of the SLC System are automatically initiated during an ATWS.	e. Tests will be conducted on the as-built SLC System using simulated ATWS signals.	e. Upon receipt of a simulated ATWS signal, both divisions of SLC automatically initiate.
f. Each SLC System pump has an interlock which prevents operation if both the test tank outlet valve and the pump suction valve are closed.	f. Tests will be conducted on each SLC System pump start logic using simulated valve position signals	f. Each SLC System pump is prevented from operating unless signals indicative of one of the following conditions exist: (1) A suction path from the storage tank is available (the pump suction valve is fully open). (2) A suction path from the test tank is available (the test tank outlet valve is fully open).

Table 2.2.4 Standby Liquid Control System (Continued)

Inspections, Tests, Analyses and Acceptance Criteria		
Design Commitment	**Inspections, Tests, Analyses**	**Acceptance Criteria**
g. The performance of the SLC System is based on the following plant parameters: (1) Storage tank pumpable volume is greater than or equal to 23.1 m^3. (2) RPV water inventory is less than or equal to 455 x 10^3 kg at normal water level and 20°C. (3) RHR shutdown cooling system inventory is less than or equal to 130 x 10^3 kg at 20°C.	g. The as-built dimensions will be used in a volumetric analysis to calculate the volumes listed below: (1) Minimum Storage tank pumpable volume. (2) RPV water inventory at normal water level and 20°C. (3) RHR shutdown cooling system water inventory at 20°C.	g. (1) Storage tank pumpable volume is greater than or equal to 23.1 m^3. (2) RPV water inventory is less than or equal to 455 x 10^3 kg at 20°C. (3) RHR shutdown cooling system inventory is less than or equal to 130 x 10^3 kg at 20°C.
h. The SLC pumps have sufficient NPSH.	h. Tests will be conducted on the as-built SLC System by injecting demineralized water using both SLC System pumps from the storage tank to the RPV with the storage tank at the low level (pump trip level) and a temperature of greater than or equal to 43°C.	h. The available NPSH exceeds the NPSH required as demonstrated by the SLC System injecting greater than or equal to 378 liters/minute.
i. The SLC System pump relief valves open when the inlet pressure to the valve equals or exceeds the setpoint (10.76 MPaG).	i. Shop or field tests will be conducted using the SLC System pump to determine the relief valve setpoint.	i. The SLC System pump relief valves open when the inlet pressure to the valve equals or exceeds 10.76 MPaG.

Table 2.2.4 Standby Liquid Control System (Continued)

Inspections, Tests, Analyses and Acceptance Criteria		
Design Commitment	**Inspections, Tests, Analyses**	**Acceptance Criteria**
4. In the SLC System, independence is provided between Class 1E divisions, and also between Class 1E divisions and non-Class 1E equipment.	4. a. Tests will be conducted on the SLC System by providing a test signal in only one Class 1E Division at a time. b. Inspection of the as-built SLC System will be performed.	4. a. The test signal exists only in the Class 1E Division under test in the SLC System. b. In the SLC System, physical separation or electrical isolation exists between Class 1E divisions. Physical separation or electrical isolation exists between these Class 1E divisions and non-Class 1E equipment.
5. Main control room alarms, displays, and controls provided for the SLC System are defined in Section 2.2.4.	5. Inspections will be performed on the main control room alarms, displays, and controls for the SLC System.	5. Alarms, displays, and controls exist or can be retrieved in the main control room as defined in Section 2.2.4.
6. MOVs designated in Section 2.2.4 as having an active safety-related function open under system pressure, fluid flow, and temperature conditions.	6. Tests of the installed valves for opening will be conducted under preoperational differential pressure, fluid flow, and temperature conditions.	6. Upon receipt of the actuating signal, each MOV opens.
7. The CVs designated in Section 2.2.4 as having an active safety-related function open, close, or both open and close under system pressure, fluid flow, temperature conditions.	7. Tests of the installed valves for opening, closing, or both opening and closing, will be conducted under system preoperational pressure, fluid flow, and temperature conditions.	7. Based on the direction of the differential pressure across the valve, each CV opens, closes, or both opens and closes, depending upon the valve's safety function.

2.2.5 Neutron Monitoring System

Design Description

The Neutron Monitoring System (NMS) is a neutron monitoring and protection system. The functions of the system are to:

(1) Monitor the thermal neutron flux in the reactor core.

(2) Provide trip signals to the Reactor Protection System (RPS).

(3) Provide power information to the operator and plant control systems.

The startup range neutron monitor (SRNM), the local power range monitor (LPRM), and the average power range monitor (APRM) are classified as Class 1E safety-related. The automated incore instrument calibration system and the multi-channel rod block monitor (MRBM) are classified as non-safety-related.

The SRNM monitors neutron flux from the source range to 15% of the rated power. The SRNM has ten SRNM channels, each with one detector, which are distributed throughout the reactor core and assigned to four divisions. The SRNM detector is a fixed in-core sensor. Detector cables are separated according to different divisional assignment, connected to their designated preamplifiers located in the Reactor Building, and then transmitted to signal processing electronic units in the Control Building.

The LPRM monitors local neutron flux in the power range up to 125% of the rated power, and overlaps with part of the SRNM range. LPRM detector assemblies are provided and are distributed in the core, with four sensors per each LPRM assembly, to monitor local neutron flux level throughout the core. The LPRM assembly also contains space for automated in-core calibration detector. The LPRM detector outputs are connected to the APRM signal conditioning units in the Control Building, where the signals are processed and amplified. LPRM detector signals are divided and assigned to four APRM channels corresponding to four divisions. LPRM signals in each APRM channel are summed and averaged to form an APRM signal which represents the core average power.

The Oscillation Power Range Monitor (OPRM) is part of the APRM. Each OPRM receives the identical LPRM signals from the corresponding APRM channel as inputs, and forms many OPRM cells to monitor the neutron flux behavior of all regions of the core. The LPRM signals assigned to each cell are summed and averaged to provide an OPRM signal for this cell. The OPRM trip protection algorithm detects thermal hydraulic instability and provides trip output to the RPS if the trip setpoint is exceeded. The OPRM bypass is controlled by the bypass of the APRM channel it resides with.

The automated in-core instrument calibration system provides local power information at various core locations that correspond to LPRM locations. The automated in-core instrument

calibration system uses its own set of in-core detectors for local power measurement and provides local power information for three-dimension core power determination and for the calibration of the LPRMs. The measured data are sent to the Plant Computer Functions for such calculation and LPRM calibration.

The MRBM uses LPRM signals to detect local power change during the rod withdrawal. If the averaged LPRM signal exceeds a preset rod block setpoint, a control rod block demand is issued.

Figure 2.2.5 shows the configuration of each NMS division.

Each of the four divisions of the SRNM, LPRM and APRM instruments is powered by its respective divisional Class 1E power supplies. In the NMS outside the primary containment, independence is provided between Class 1E divisions, and also between the Class 1E divisions and non-Class 1E equipment.

The SRNM and APRM trip signal outputs are in four divisions. The SRNM trip and the APRM trip logic are independent from each other. The SRNM generates a high neutron flux trip or a short period trip signal. Any single SRNM channel trip causes a trip in its division. The APRM can generate a high neutron flux trip, a simulated thermal power (STP) trip signal, a rapid core flow decrease trip signal, or a core power oscillation trip signal. The NMS provides these trip signals to the Reactor Protection System (RPS).

The SRNM and APRM are fail-safe in the event of loss of electrical power to any division of their logic.

The NMS bypass function is performed within the NMS. Within the NMS, the bypass functions of the SRNM and the APRM are separate and independent from each other. The SRNM channels are grouped into three bypass groups. Individual SRNM channels can be bypassed. At any one time, up to three SRNM channels can be bypassed. At any one time, only one APRM channel can be bypassed. A bypassed SRNM channel or a bypassed APRM channel does not cause a trip output sent to the RPS.

The NMS provides SRNM flux permissive signal to the Standby Liquid Control (SLC) System and feedwater runback logic within Safety System Logic and Control (SSLC) and an APRM flux permissive signal to the Nuclear Boiler System (NBS) logic within SSLC as part of the anticipated transient without scram (ATWS) logic. The SRNM and APRM flux permissive signals from the NMS indicate when the reactor power level is above or below the setpoint in order to allow or disallow the initiation of ATWS mitigation features.

The NMS has the following displays and controls in the main control room:

(1) SRNM, LPRM, and APRM neutron flux displays.

(2) Trip and bypass status displays.

(3) Bypass control devices.

Inspections, Tests, Analyses and Acceptance Criteria

Table 2.2.5 provides a definition of the inspections, tests, and/or analyses, together with associated acceptance criteria, which will be undertaken for the NMS.

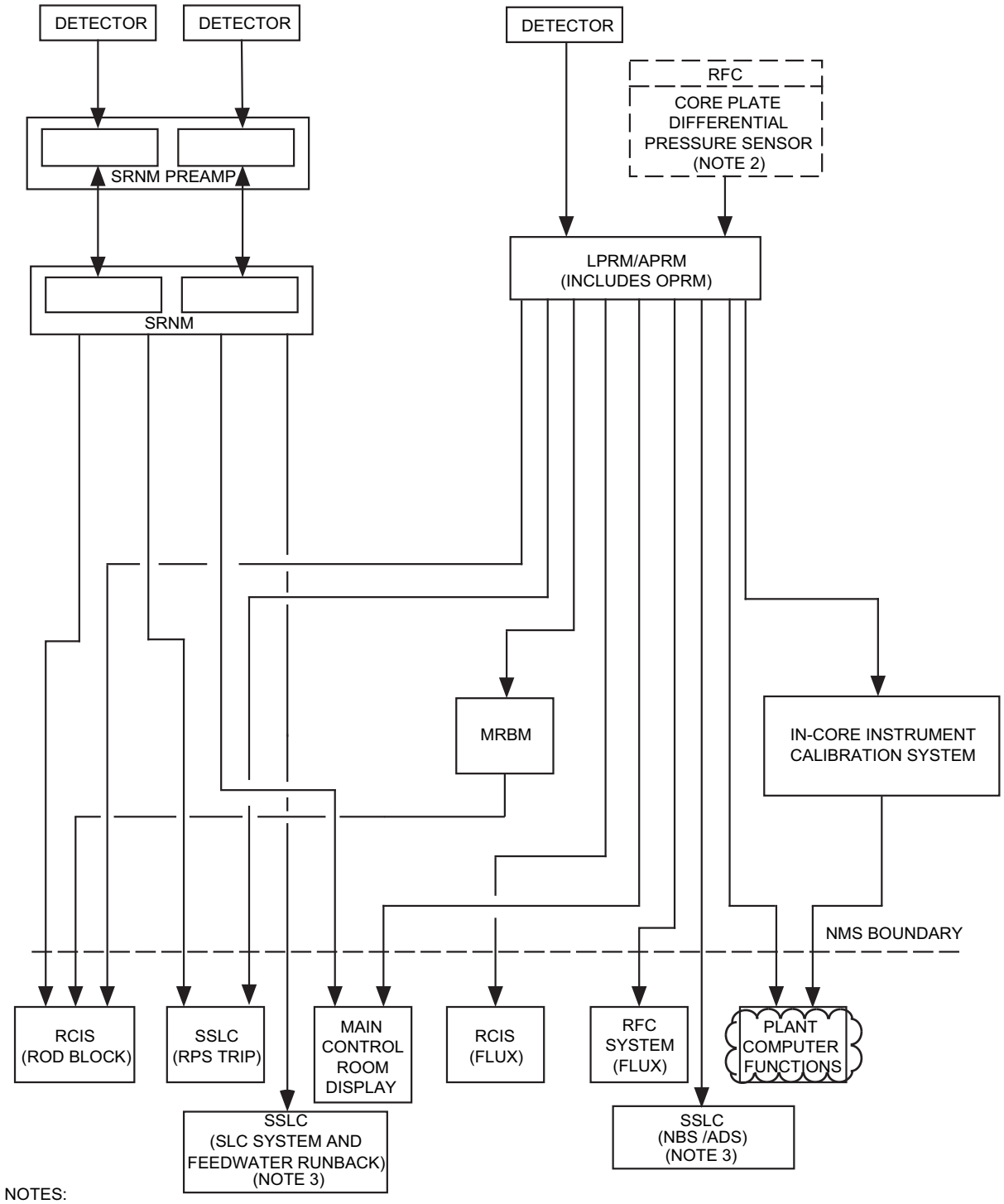

NOTES:
1. DIAGRAM REPRESENTS ONE OF FOUR NMS DIVISIONS (MRBM IS A DUAL CHANNEL SYSTEM. THERE IS ONLY ONE IN-CORE INSTRUMENT CALIBRATION SYSTEM).
2. USED FOR RAPID CORE FLOW DECREASE TRIP.
3. SRNM AND APRM ATWS PERMISSIVE SIGNALS TO SSLC.
4. INTERCONNECTIONS MAY BE FIBER-OPTIC OR METALLIC.

Figure 2.2.5 Neutron Monitoring System

Table 2.2.5 Neutron Monitoring System

Inspections, Tests, Analyses and Acceptance Criteria		
Design Commitment	**Inspections, Tests, Analyses**	**Acceptance Criteria**
1. The equipment comprising the NMS is defined in Section 2.2.5.	1. Inspection of the as-built system will be conducted.	1. The as-built NMS conforms with the description in Section 2.2.5.
2. The OPRM trip protection algorithm detects thermal hydraulic instability and provides trip output to the RPS if the trip setpoint is exceeded.	2. Tests will be conducted on OPRM using simulated LPRM input signals.	2. A trip signal to the RPS is generated when the simulated LPRM signals cause the OPRM signal to exceed the trip setpoint.
3. The MRBM uses LPRM signals to detect local power change during the rod withdrawal. If the averaged LPRM signal exceeds a preset rod block setpoint, a control rod block demand is issued.	3. Tests will be conducted on MRBM using simulated LPRM input signals.	3. A control rod block demand signal is issued when the simulated averaged LPRM signal exceeds the preset rod block setpoint.
4. Each of the four divisions of the SRNM, LPRM and APRM instruments is powered by its respective divisional Class 1E power supplies. In the NMS independence is provided between Class 1E divisions, and between Class 1E divisions and non-Class 1E equipment.	4. a. Tests will be performed on the NMS by providing a test signal to only one Class 1E division at a time. b. Inspection of the as-installed Class 1E divisions in the NMS will be performed.	4. a. The test signal exists only in the Class 1E division under test in the NMS. b. In the NMS, physical separation or electrical isolation exists between Class 1E divisions. Physical separation or electrical isolation exists between these Class 1E divisions and non-Class 1E equipment.
5. The SRNM generates a high neutron flux trip or a short period trip signal. Any single SRNM channel trip causes a trip in the division.	5. Tests will be conducted on the SRNM using simulated neutron flux and period signals.	5. Trip signals are generated when the simulated input signals exceed trip setpoints. Any single SRNM channel trip causes a trip in its division.
6. The APRM can generate high neutron flux trip, a STP trip signal, a rapid core flow decrease trip signal, or a core power oscillation trip signal.	6. Tests will be conducted on the APRM using simulated neutron flux, and core plate differential pressure signals.	6. Trip signals are generated when the trip setpoints for high neutron flux, a high STP, a rapid core flow decrease, and a core power oscillation are exceeded.

Table 2.2.5 Neutron Monitoring System (Continued)

Inspections, Tests, Analyses and Acceptance Criteria		
Design Commitment	**Inspections, Tests, Analyses**	**Acceptance Criteria**
7. The SRNM and APRM are fail-safe in the event of loss of electrical power to any division of their logic.	7. Tests will be conducted on the SRNM and APRM by disconnecting electrical power to one division of logic at a time.	7. Upon loss of electrical power to one division of either the SRNM or APRM a trip signal is generated in that division.
8. Within the NMS, the bypass functions of the SRNM and the APRM are separate and independent from each other. The SRNM channels are grouped into three bypass groups. Individual SRNM channels can be bypassed. At any one time, up to three SRNM channels can be bypassed. At any one time, only one APRM channel can be bypassed.	8. Inspections and tests will be conducted on the SRNM and APRM bypass functions.	8. Within the NMS, the bypass functions of the SRNM and the APRM are separate and independent from each other. The SRNM channels are grouped into three bypass groups. Individual SRNM channels can be bypassed. At any one time, up to three SRNM channels can be bypassed. At any one time, only one APRM channel can be bypassed.
9. A bypassed SRNM channel or a bypassed APRM channel does not cause a trip output sent to the RPS.	9. Tests will be conducted on the SRNM and APRM bypassed channels using simulated input signals.	9. No trip output signal is sent to the RPS, when a simulated input signal is provided to a bypassed SRNM or a bypassed APRM channel.
10. The SRNM and APRM flux permissive signals from the NMS indicate when the reactor power level is above or below the setpoint in order to allow or disallow the initiation of ATWS mitigation features.	10. Test will be conducted using simulated SRNM and APRM flux signals.	10. The SRNM and APRM flux permissive signals from the NMS indicate when the reactor power level is above or below the setpoint in order to allow or disallow the initiation of ATWS mitigation features.
11. Main control room displays and controls provided for the NMS are as defined in Section 2.2.5.	11. Inspections will be performed on the main control room displays and controls for the NMS.	11. Displays and controls exist or can be retrieved in the main control room as defined in Section 2.2.5.

2.2.6 Remote Shutdown System

Design Description

The Remote Shutdown System (RSS) provides remote manual control of safety-related systems to bring the reactor to hot shutdown and subsequent cold shutdown conditions from outside the main control room (MCR). Figure 2.2.6 shows the basic system configuration and scope.

The RSS has two divisional panels and associated controls and indicators for interfacing with the following systems:

(1) Residual Heat Removal (RHR) System

(2) High Pressure Core Flooder (HPCF) System

(3) Nuclear Boiler System (NBS)

(4) Reactor Service Water (RSW) System

(5) Reactor Building Cooling Water (RCW) System

(6) Electrical Power Distribution (EPD) System

(7) Atmospheric Control (AC) System

(8) Emergency Diesel Generator (DG)

(9) Make-up Water System (Condensate), (MUWC)

(10) Not used

(11) Suppression Pool Temperature Monitoring (SPTM) System

RSS controls and indicators are hard-wired direct to the interfacing components and sensors.

The RSS is classified as a Class 1E safety-related system.

Operation of transfer switches on the RSS panel overrides and isolates the controls from the MCR and transfers control to the RSS. Transfer switch actuation causes alarms in the MCR. Indications required for plant shutdown are provided on the RSS panels as shown on Figure 2.2.6.

RSS Division A has the following automatic controls and interlocks for RHR System Division A. RSS Division B has the following automatic controls and interlocks for RHR System Division B and HPCF System Division B:

(1) RHR minimum flow valve A(B) is commanded open upon receipt of a signal indicating low RHR flow and high RHR pump discharge pressure. The valve is commanded closed upon receipt of a RHR high flow signal.

(2) RHR pump A (B) is prevented from starting and commanded to stop unless position signals exist which indicate that the valves in the suction piping are fully open.

(3) RHR injection valve A(B) is prevented from opening and commanded closed when reactor vessel pressure is above a setpoint.

(4) RHR shutdown cooling suction valve A is prevented from opening unless S/P return valve A and S/P suction valve A are both fully closed.

(5) RHR shutdown cooling suction valve B is prevented from opening unless S/P return valve B, suppressing pool suction valve B, drywell spray valve B, and wetwell spray valve B are all fully closed.

(6) RHR shutdown cooling isolation suction valves A(B) are prevented from opening and commanded closed when reactor vessel pressure is above a setpoint.

(7) HPCF minimum flow valve B is commanded open upon receipt of a signal indicating low HPCF flow and high HPCF pump discharge pressure. The valve is commanded closed upon receipt of a high HPCF flow signal.

(8) HPCF pump B is prevented from starting and commanded to stop unless position signals exist which indicate that the valves in the suction piping are fully open.

Each of the two RSS divisions is powered from its respective Class 1E division. In the RSS, independence is provided between Class 1E divisions, and also between the Class 1E divisions and non-Class 1E equipment.

The RSS panels are located in the Reactor Building remote from the MCR.

Inspections, Tests, Analyses and Acceptance Criteria

Table 2.2.6 provides a definition of the visual inspections, tests and/or analyses, together with associated acceptance criteria, which will be undertaken for the RSS.

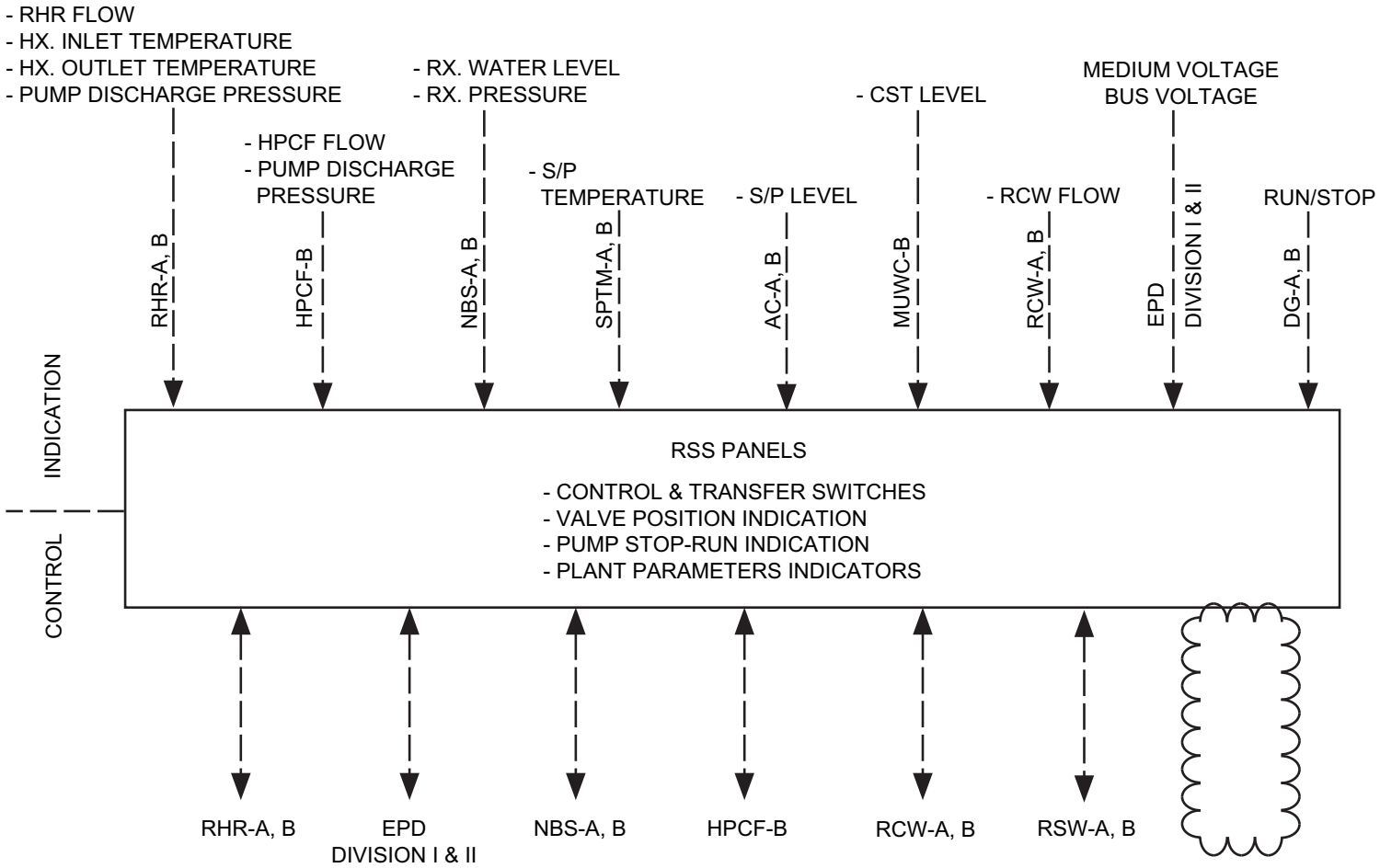

NOTES:
1. RSS PANELS A AND B INTERFACE WITH SYSTEM IN DIVISIONS A AND B (I AND II), RESPECTIVELY.

Figure 2.2.6 Remote Shutdown System

Table 2.2.6 Remote Shutdown System

Inspections, Tests, Analyses and Acceptance Criteria		
Design Commitment	**Inspections, Tests, Analyses**	**Acceptance Criteria**
1. The equipment comprising the RSS is defined in Section 2.2.6.	1. Inspections of the as-built system will be conducted.	1. The as-built RSS conforms with the description in Section 2.2.6.
2. Operation of transfer switches on the RSS panel overrides and isolates the controls from the MCR and transfers control to the RSS.	2. Tests will be conducted on each as-built RSS division by placing the transfer switches in the RSS position. Continuity tests will then be conducted between RSS control devices and interfacing equipment. Additional tests will be conducted to attempt actuation of the interfacing equipment from the MCR.	2. Operation of transfer switches on the RSS panel overrides and isolates the controls from the MCR and transfers control to the RSS.
3. Transfer switch actuation causes alarms in the MCR.	3. Tests will be conducted on each as-built RSS division by placing the transfer switch in the RSS position.	3. Transfer switch actuation causes alarms in the MCR.
4. RSS Division A has the following automatic controls and interlocks for RHR System Division A. RSS Division B has the following automatic controls and interlocks for RHR System Division B and HPCF System Division B:	4. —	4. —
a. RHR minimum flow valve A(B) is commanded open upon receipt of a signal indicating low RHR flow and high RHR pump discharge pressure. The valve is commanded closed upon receipt of a RHR high flow signal.	a. Tests will be conducted on the RSS using simulated RHR System flow and pump discharge pressure signals.	a. RHR minimum flow valve receives an open signal when low flow and high discharge pressure signals are simulated. This valve receives a close signal when a high flow signal is simulated.
b. RHR pump A(B) is prevented from starting and commanded to stop unless position signals exist which indicate that the valves in the suction piping are fully open.	b. Tests will be conducted on the RSS using simulated valve position signals.	b. RHR pump receives a start signal when simulated signals indicate a suction path is fully open. A stop signal is received when simulated signals indicate absence of a fully open suction path.

Table 2.2.6 Remote Shutdown System (Continued)

Inspections, Tests, Analyses and Acceptance Criteria		
Design Commitment	**Inspections, Tests, Analyses**	**Acceptance Criteria**
c. RHR injection valve A(B) is prevented from opening and commanded closed when reactor vessel pressure is above a setpoint.	c. Tests will be conducted on the RSS using simulated reactor vessel pressure signals	c. RHR injection valve receives an open signal when a low reactor vessel pressure signal is simulated. When a high reactor vessel pressure signal is simulated, the open signal is removed and a close signal is received.
d. RHR shutdown cooling suction valve A is prevented from opening unless S/P return valve A and S/P suction valve A are both fully closed.	d. Tests will be conducted on the RSS using simulated valve position signals.	d. RHR shutdown cooling suction valve A receives an open signal only when simulated signals indicate that S/P suction and return valves are both fully closed.
e. RHR shutdown cooling suction valve B is prevented from opening unless S/P return valve B, S/P suction valve B, drywell spray valve B, and wetwell spray valve B are all fully closed.	e. Tests will be conducted on the RSS using simulated valve position signals.	e. RHR shutdown cooling suction valve B receives an open signal only when simulated valve-fully-closed signals are present.
f. RHR shutdown cooling isolation suction valves A(B) are prevented from opening and commanded closed when reactor vessel pressure is above a setpoint.	f. Tests will be conducted on the RSS using simulated reactor vessel pressure signals.	f. RHR shutdown cooling isolation suction valves receive an open signal only when the simulated reactor vessel pressure signal is below a setpoint. The valves receive a close signal when the simulated signal indicates reactor vessel pressure is above a setpoint.
g. HPCF minimum flow valve B is commanded open upon receipt of a signal indicating low HPCF flow and high HPCF pump discharge pressure. The valve is commanded closed upon receipt of a high HPCF flow signal.	g. Tests will be conducted on the RSS using simulated HPCF System flow and pump discharge pressure signals.	g. HPCF minimum flow valve receives an open signal when low flow and high discharge pressure signals are simulated. This valve receives a close signal when a high flow signal is simulated.

Table 2.2.6 Remote Shutdown System (Continued)

Inspections, Tests, Analyses and Acceptance Criteria		
Design Commitment	**Inspections, Tests, Analyses**	**Acceptance Criteria**
h. HPCF pump B is prevented from starting and commanded to stop unless position signals exist which indicate that the valves in the suction piping are fully open.	h. Tests will be conducted on the RSS using simulated valve position signals.	h. HPCF pump is permitted to start when simulated signals indicate a suction path is fully open. A stop signal is received when simulated signals indicate absence of a fully open suction path.
5. Each of two RSS divisions is powered from its respective Class 1E division. In the RSS, independence is provided between Class 1E divisions, and between Class 1E divisions and non-Class 1E equipment.	5. a. Tests will be performed on the RSS by providing a test signal in only one Class 1E division at a time. b. Inspection of the as-built Class 1E divisions in the RSS will be performed.	5. a. The test signal exists only in the Class 1E division under test in the RSS. b. In the RSS, physical separation or electrical isolation exists between Class 1E divisions. Physical separation or electrical isolation exists between these Class 1E division and non-Class 1E equipment.

2.2.7 Reactor Protection System

Design Description

The Reactor Protection System (RPS) is an instrumentation and control system and its purpose is to initiate reactor scram whenever RPS logic requirements for scram initiation are satisfied.

As shown in Figure 2.2.7a, the RPS interfaces with the Neutron Monitoring System (NMS), Nuclear Boiler System (NBS), Control Rod Drive (CRD) System, Rod Control and Information System (RCIS), Recirculation Flow Control (RFC) System, and the Suppression Pool Temperature Monitoring System (SPTM). Figure 2.2.7a also depicts the primary RPS logic.

The RPS has four divisions. Figure 2.2.7b shows the RPS divisional aspects and the signal flow paths from sensors to scram pilot valve solenoids. Functions within an RPS division include sensors (transducers or switches), I/O, data communication, digital trip functions (DTF), trip logic functions (TLF), output logic unit (OLU), and load drivers (LD). The LDs are only in Divisions II and III. The DTF and TLF are performed in digital configurable logic devices. The data communication functions are described in Section 2.7.5.

The RPS is classified as a Class 1E safety-related system.

The RPS consists of logic and circuitry for initiation of both automatic and manual scrams. The automatic scram function is accomplished redundantly in four independent divisions of sensor and logic processing, and two independent divisions of actuating devices. Automatic scram is initiated whenever a scram condition is detected by two or more automatic divisions of RPS logic. For determination of the existence of an automatic scram condition, within each division of the RPS, the DTF of a given RPS division compares the monitored process variable with a setpoint stored in its memory and issues a trip signal if the monitored process variable exceeds the setpoint. The DTF sends the trip signal to the TLF of its own division and the TLFs of the other three divisions of RPS. The TLF in each division performs an independent two-out-of-four vote on each RPS DTF input.

In the case of the NMS, the four divisions of the NMS each provide their trip signals to each RPS divisional TLF. A list of conditions that can cause automatic reactor scram is provided below. The name of the system that provides the sensor input signal or the trip signal is shown in brackets.

(1) Turbine Stop Valves Closure at above 40% power levels [RPS]

(2) Low Turbine Control Valves Oil Pressure (Fast Closure) at above 40% power levels [RPS]

(3) NMS Trips [NMS]

(4) High Reactor Pressure [NBS]

(5) Low Reactor Water Level [NBS]

(6) High Drywell Pressure [NBS]

(7) Main Steamline Isolation [NBS]

(8) Low Control Rod Drive Accumulator Charging Header Pressure [CRD]

(9) High Suppression Pool Average Temperature [SPTM]

The TLFs provide their trip signals to their divisional OLUs which control the solid-state LDs that control the Class 1E AC power to the scram solenoids and relays that control DC power to back-up scram valves. For automatic scram initiation, the TLF trip signals cause the LDs to interrupt Class 1E AC power to the scram solenoids (fail-safe logic), cause the back-up scram relays to supply DC power to back-up scram solenoids, and provide scram follow signals to the RCIS. Each division of RPS controls eight LDs. The LDs are arranged to switch AC power to the scram solenoids in a two-out-of-four arrangement. That is, reactor scram will occur only if two or more divisions of the RPS provide trip signals to their associated LDs.

Manual scram function, which is separate and independent from automatic scram logic, is implemented in Divisions II and III of the RPS. For manual scram initiation, two manual scram push buttons must be simultaneously depressed. When manual scram is initiated, the RPS interrupts Class 1E AC power to the scram solenoids, connects divisional Class 1E DC power to back-up scram solenoids, and provides scram follow signals to RCIS. The RPS logic seals in the scram signals and permits reset of scram logic only after a time delay of at least 10 seconds.

RPS initiates a reactor internal pump (RIP) trip on receipt of either a turbine stop valve closure or a low turbine control valve oil pressure signal when the reactor power is above 40% (from a turbine first stage pressure signal).

The RPS design is single-failure-proof and redundant. Also, the RPS design is fail-safe in the event of loss of electrical power to one division of RPS logic.

The OLU and LDs are implemented with non-microprocessor-based equipment. The remaining RPS functions are primarily implemented with configurable logic devices.

Each of the four RPS divisional logic and associated sensors are powered from their respective divisional Class 1E power supply. In the RPS, independence is provided between Class 1E divisions, and also between the Class 1E divisions and non-Class 1E equipment.

As shown on Figure 2.2.7a, the RPS has manual divisional trip switches, reactor mode switch, manual scram switches, and scram reset switches for manual controls. Divisional trip displays, and scram solenoids electrical power status lights are also provided. These RPS controls and displays are provided in the main control room. Fail safe RPS sensors are turbine control valve

oil pressure switches, turbine stop valve position switches, and turbine first-stage pressure sensors. These sensors are located in the Turbine Building.

Inspections, Tests, Analyses and Acceptance Criteria

Table 2.2.7 provides a definition of the inspections, tests, and/or analyses, together with associated acceptance criteria, which will be performed for the RPS.

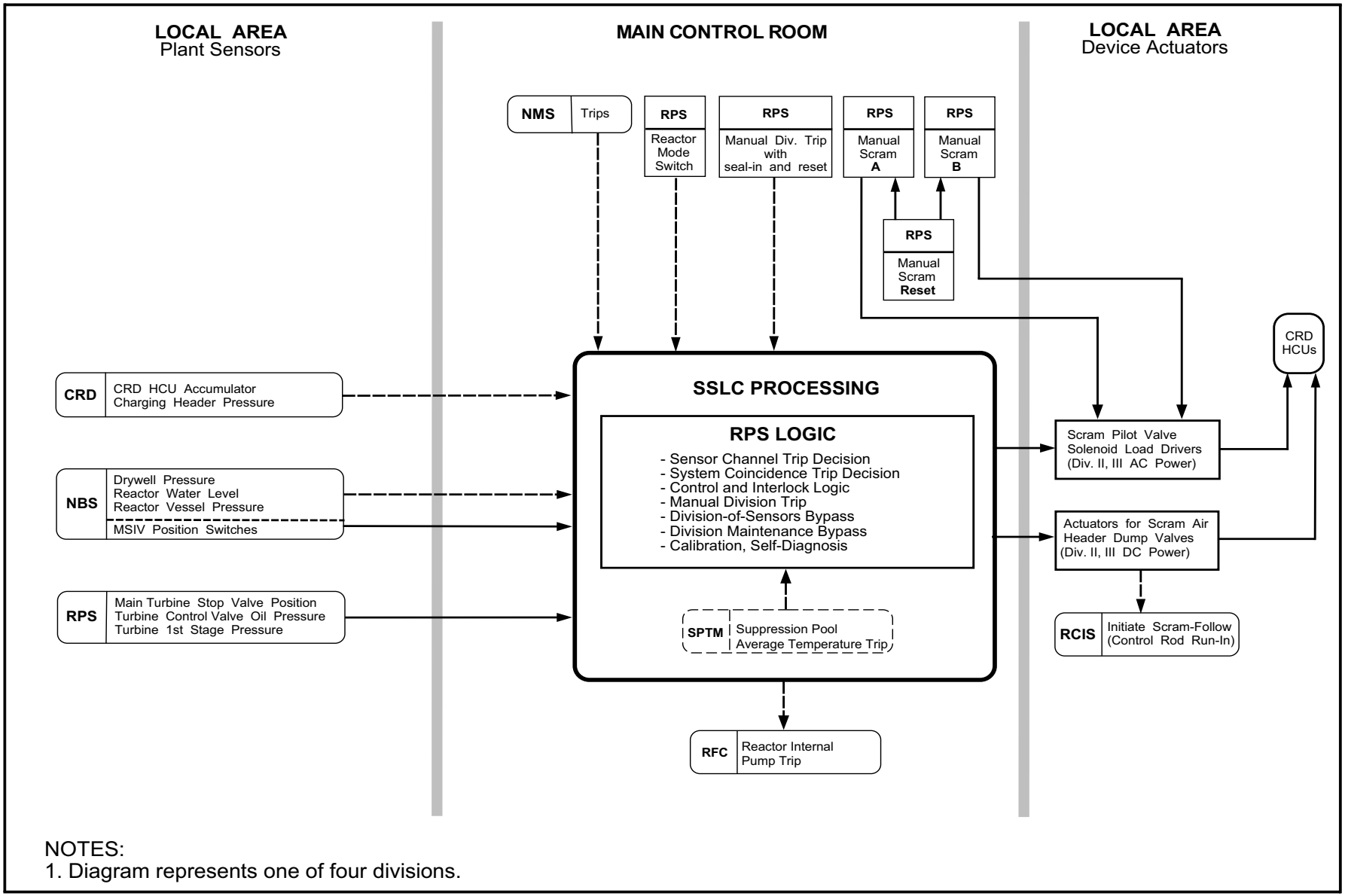

NOTES:
1. Diagram represents one of four divisions.

Figure 2.2.7a Reactor Protection System Control Interface Diagram

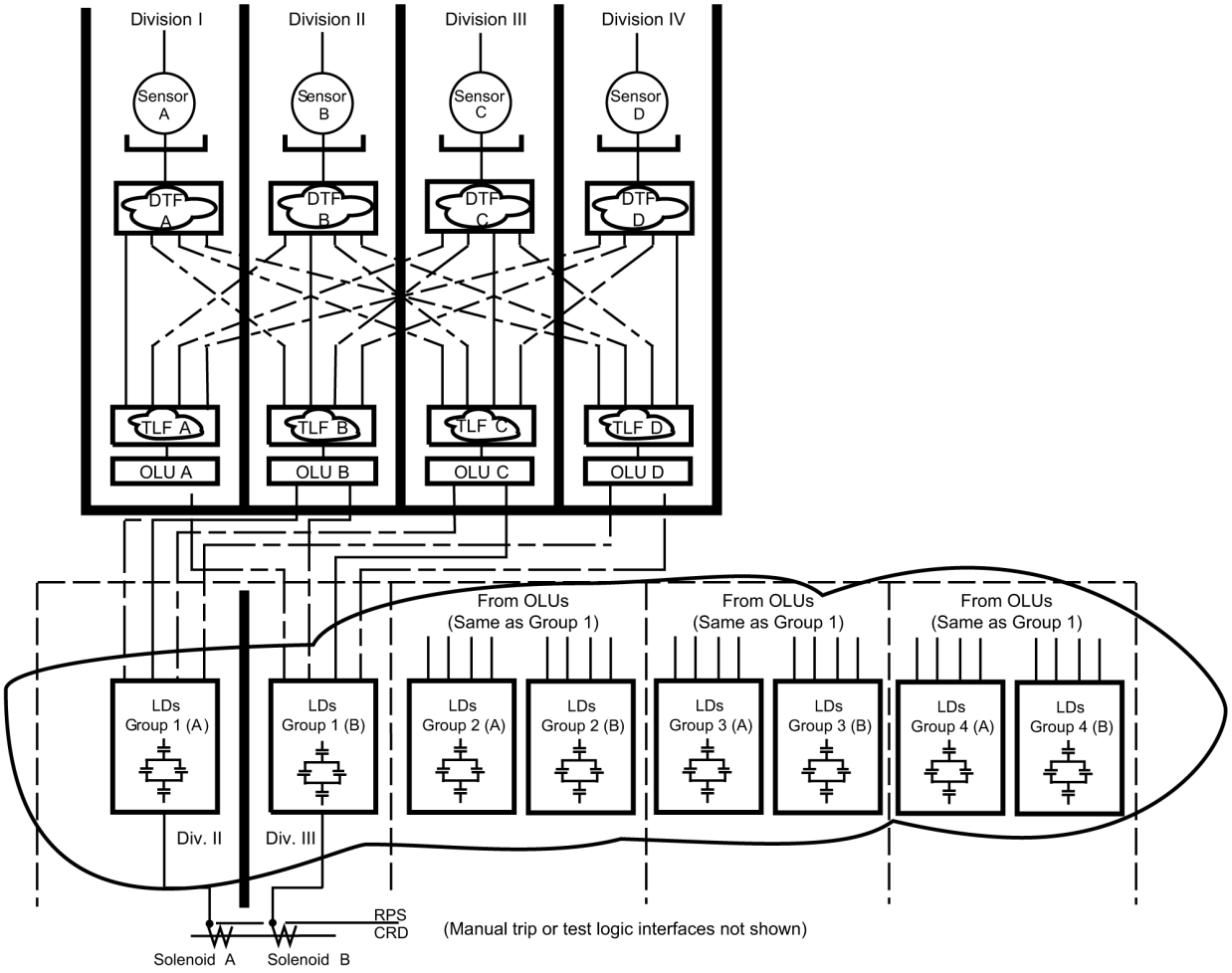

Figure 2.2.7b Reactor Protection System

Table 2.2.7 Reactor Protection System

Inspections, Tests, Analyses and Acceptance Criteria		
Design Commitment	**Inspections, Tests, Analyses**	**Acceptance Criteria**
1. The Equipment comprising the RPS is defined in Section 2.2.7.	1. Inspection of the as-built system will be conducted.	1. The as-built RPS conforms with the description in Section 2.2.7.
2. RPS logic uses four independent sensor instrument channels of each process variable described in Section 2.2.7 for its automatic scram function.	2. Tests will be conducted using simulated input signals for each process variable to cause trip conditions in two, three, and four instrument channels of the same process variable of the RPS.	2. The RPS LDs change their states to interrupt electrical power to scram solenoids. RPS back-up scram relays close and RCIS relays close to provide signals to RCIS.
3. For manual scram initiation two manual scram push buttons of the RPS must be simultaneously depressed.	3. Tests will be conducted by depressing the scram push button A, the B scram push-button, and both.	3. When manual scram push-button A is depressed Division II AC power to A scram solenoids is interrupted. When scram push button B is depressed Division III AC power to B scram solenoids is interrupted. When both A & B scram push buttons are depressed reactor scram occurs, RPS back-up scram relays close to energize the solenoids of scram air header dump valves and RCIS relays close to provide signals to the RCIS.
4. The RPS logic seals in the scram signal, and permits reset of scram logic after a time delay of at least 10 seconds.	4. Tests will be conducted by attempting to reset RPS scram circuitry during the 10 seconds time period after scram initiation.	4. During the 10 second time period after scram initiation, reset does not occur.
5. RPS initiates an RIP trip on receipt of either a turbine stop valve closure or a low turbine control valve oil pressure signal when reactor power is above 40% (from a turbine first stage signal).	5. Test will be conducted on the as-built RPS using simulated turbine stop valve position, turbine control valve oil pressure and turbine first stage pressure signals.	5. The RPS initiates an RIP trip on receipt of either a simulated signals indicating turbine stop valve closure or low control valve oil pressure when reactor power is above 40%.

Table 2.2.7 Reactor Protection System (Continued)

Inspections, Tests, Analyses and Acceptance Criteria		
Design Commitment	**Inspections, Tests, Analyses**	**Acceptance Criteria**
6. RPS design is fail-safe in the event of loss of electrical power to one division of RPS logic.	6. Tests will be conducted by disconnecting electrical power to one division of RPS logic at a time.	6. Upon loss of electrical power to one division of RPS logic, the LDs of that division change their state to interrupt electrical power to scram solenoids.
7. Each of the four RPS divisional logic and associated sensors are powered from their respective divisional Class 1E power supply. In the RPS, independence is provided between Class 1E divisions, and between Class 1E divisions and non-Class 1E equipment.	7. a. Tests will be conducted on the as-built RPS by providing a test signal to only one Class 1E division at a time. b. Inspection of the as-installed Class 1E divisions in the RPS will be performed.	7. a. The test signal exists only in the Class 1E division under test in the RPS. b. In the RPS physical separation or electrical isolation exists between Class 1E divisions. Physical separation or electrical isolation exists between these Class 1E divisions and Non-Class 1E equipment.
8. Main control room displays and controls provided for the RPS are as defined in Section 2.2.7.	8. Inspections will be performed on the main control room displays and controls for the RPS.	8. Displays and controls exist or can be retrieved in the main control room as defined in Section 2.2.7.

2.2.8 Recirculation Flow Control System

Design Description

The Recirculation Flow Control (RFC) System controls reactor power by controlling the recirculation flow rate through the reactor core. This is achieved by modulating the recirculation internal pump (RIP) speeds using voltage and frequency modulation of adjustable speed drive (ASD) outputs.

The RFC System consists of redundant microprocessor-based controllers, adjustable speed drives, and motor generator (MG) sets. There are two MG sets, each of which supplies three of the ten ASDs which power the ten RIPs. The other four ASDs receive power directly from the power supply bus. No more than three RIPs are connected to any one power supply bus.

The RFC System operates in either manual or automatic control modes and has the control interfaces shown on Figure 2.2.8.

Except for the core plate differential pressure sensors provided for the Neutron Monitoring System (NMS), the RFC System is classified as non-safety-related. The four core plate differential pressure sensors for the NMS are classified as Class 1E safety-related.

The RFC System has the logic to generate the following signals to mitigate an anticipated transient without scram (ATWS) event:

(1) A signal to open the alternate rod insertion (ARI) valves in the Control Rod Drive (CRD) System on a high reactor vessel pressure signal, a low reactor water level signal, or a manual RFC System signal.

(2) A signal to the Rod Control and Information System (RCIS) to initiate electrical insertion of all control rods on a high reactor vessel pressure signal, a low reactor water level signal, or a manual control rod insertion signal.

(3) A signal to trip the four RIPs not connected to MG sets on either a high reactor vessel pressure signal or a low reactor water level signal (the latter is not an ATWS mitigation feature).

(4) A signal to trip the six RIPs connected to MG sets on a low reactor water level signal. Three of the six RIPs are tripped after a preset time delay.

(5) A manual RFC System signal to Safety System Logic and Control (SSLC) to initiate the Standby Liquid Control (SLC) System and to initiate Feedwater Control (FDWC) System runback of feedwater flow.

The RFC System logic issues a signal to the RCIS for selected control rod run-in (SCRRI) to provide stability control when the following conditions occur:

(1) Two or more RIPs are tripped, and

(2) The reactor power is at or above the preset level, and

(3) Core flow is at or below the preset level.

The RFC System has the logic to generate the following protective signals:

(1) A signal to reduce all RIP speed on receipt of a signal from the RCIS that an all-rod insertion condition exists (which includes conditions of high reactor vessel pressure, low reactor vessel water level or manual RFC System initiation).

(2) A signal to trip four RIPs when Reactor Protection System (RPS) provides an RIP trip signal.

When the RIP MG set's power supply breakers open, the MG sets are capable of holding the connected RIPs at their original speeds for at least one second and, after 1 second, assure the speed is at or above a speed coastdown curve defined by a rate of speed decrease of 10% per second for an additional two seconds.

Each channel of the RFC System controller is powered by separate non-Class 1E uninterruptible power supplies. Each of the four safety-related RFC System core plate differential pressure sensors is powered from its respective divisional Class 1E power supply. In the RFC System, independence is provided between the Class 1E divisions, and also between the Class 1E divisions and non-Class 1E equipment.

The RFC System digital controllers are located in the Control Building. The ASDs and core plate differential pressure sensors are located in the Reactor Building.

Inspections, Tests, Analyses and Acceptance Criteria

Table 2.2.8 provides a definition of the inspections, tests, and/or analyses, together with the associated acceptance criteria, which will be undertaken for the RFC System.

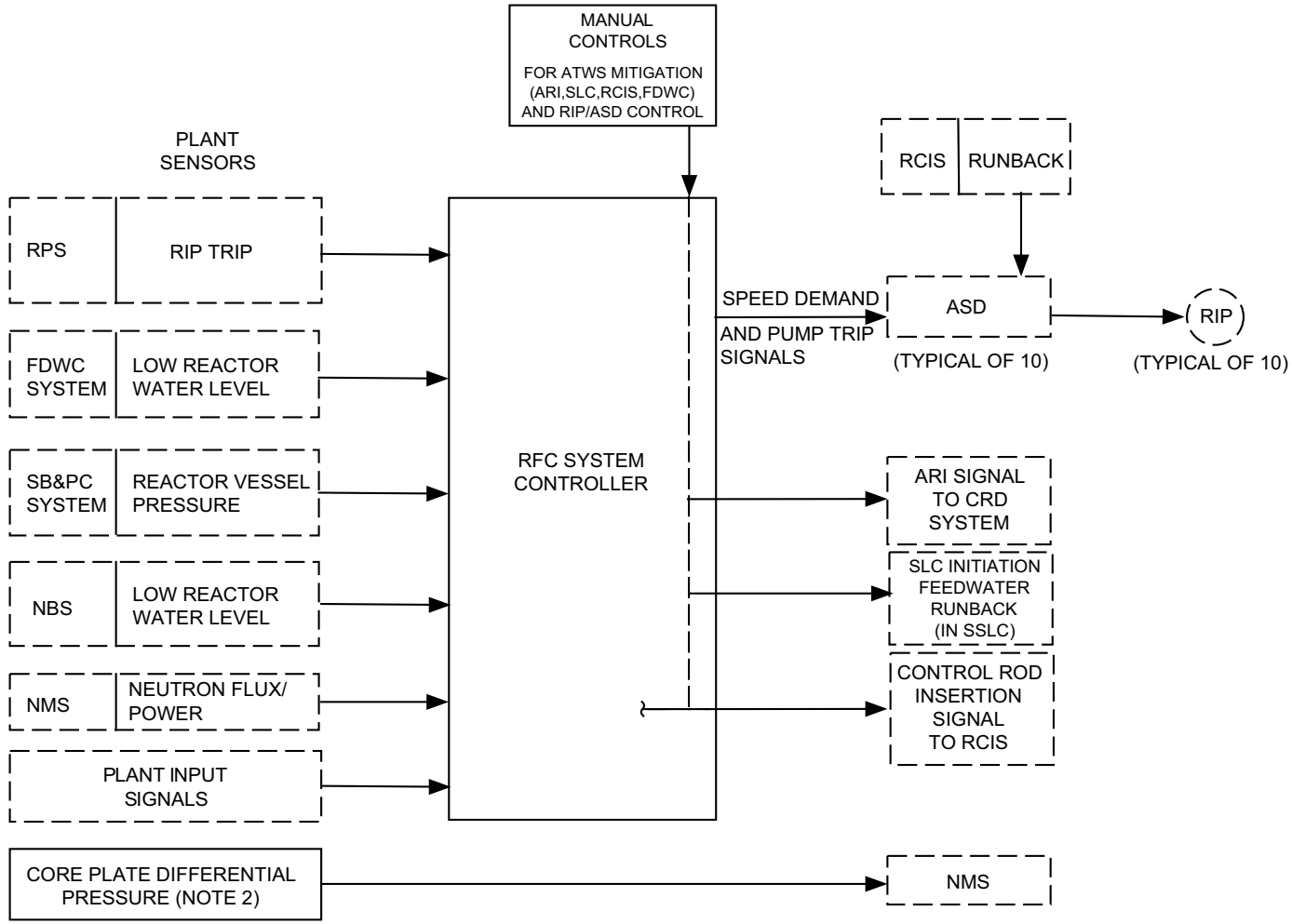

NOTE:
1. INTERCONNECTIONS MAY BE FIBER-OPTIC OR METALLIC.
2. ONE SENSOR ASSIGNED TO EACH OF FOUR CLASS 1E DIVISIONS.

Figure 2.2.8 Recirculation Flow System Control Interface Diagram

Table 2.2.8 Recirculation Flow Control System

Inspections, Tests, Analyses and Acceptance Criteria		
Design Commitment	**Inspections, Test, Analyses**	**Acceptance Criteria**
1. The equipment comprising the RFC System is defined in Section 2.2.8.	1. Inspections of the as-built system will be conducted.	1. The as-built RFC System conforms with the description in Section 2.2.8.
2. RFC System consists of redundant microprocessor based controllers.	2. Tests will be conducted by simulating failure of each operating RFC System controller.	2. There is no loss of RFC System output upon loss of any one controller.
3. The RFC System has the following logic to mitigate an ATWS event: a. A signal to open the ARI valves of the CRD System on a high reactor vessel pressure signal, a low reactor water level signal, or a manual RFC System signal. b. A signal to the RCIS to initiate electrical insertion of all control rods on a high reactor vessel pressure signal, a low reactor water level signal, or a manual control rod insertion signal.	3. Tests will be conducted on the as-built RFC System using simulated reactor vessel pressure, reactor water level, and RFC System manual signals.	3. The RFC System logic issues the following signals to mitigate an ATWS event: a. A signal to open the ARI valves of the CRD System upon receipt of a simulated high reactor vessel pressure signal, a simulated low reactor water level signal, or a simulated manual RFC System signal. b. A signal to the RCIS to initiate electrical insertion of all control rods upon receipt of a simulated high reactor vessel pressure signal, a simulated low reactor water level signal, or a simulated manual control rod insertion signal.

Table 2.2.8 Recirculation Flow Control System (Continued)

Inspections, Tests, Analyses and Acceptance Criteria		
Design Commitment	**Inspections, Test, Analyses**	**Acceptance Criteria**
3. (continued) c. A signal to trip the four RIPs not connected to MG sets on either a high reactor vessel pressure signal, or a low reactor water level signal. d. A signal to trip the six RIPs connected to MG sets on a low reactor water level signal. Three of the six RIPs are tripped after a preset time delay. e. A manual RFC System signal to SSLC to initiate the SLC System and to initiate FDWC System runback of feedwater flow.	3. (continued)	3. (continued) c. A signal to trip the four RIPs not connected to MG sets upon receipt of either a simulated high reactor vessel pressure signal, or a simulated low reactor water level signal. d. A signal to trip the six RIPs connected to MG sets upon receipt of a simulated low reactor water level signal. Three of the six RIPs trip after a preset time delay. e. A signal to initiate the SLC System and to initiate FDWC System runback of feedwater flow upon receipt of a simulated manual RFC System signal to SSLC.
4. The RFC System logic issues a signal to the RCIS for SCRRI to provide stability control when the following conditions occur: a. Two or more RIPs are tripped, and b. The reactor power is at or above a preset level, and c. Core flow is at or below a preset level.	4. Tests will be conducted on the as-built RFC System using simulated two RIPs tripped, reactor power, and core flow signals.	4. The RFC System logic issues signal to the RCIS for SCRRI upon receipt of simulated signals for: a. Two or more RIPs are tripped, and b. The reactor power is at or above a preset level, and c. Core flow is at or below a preset level.

Table 2.2.8 Recirculation Flow Control System (Continued)

Inspections, Tests, Analyses and Acceptance Criteria		
Design Commitment	**Inspections, Test, Analyses**	**Acceptance Criteria**
5. The RFC System logic generates the following protective signals: a. A signal to reduce all RIP speed on receipt of a signal from the RCIS that an all-rod insertion condition exists. b. A signal to trip four RIPs when RPS provides an RIP trip signal.	5. Tests will be conducted on the as-built RFC System using simulated reactor water level, all-rod insertion and trip signals	5. The RFC System logic issues the following protective signals: a. A signal to reduce all RIP speed upon receipt of a simulated all-rod insertion signal. b. A signal to trip four RIPs on receipt of a simulated trip signal.
6. After the power supply breakers open to the MG set, the MG sets are capable of holding the connected RIPs at their original speeds for at least one second and, after 1 second, assure the speed is at or above a speed coastdown curve defined by a rate of speed decrease of 10% per second for an additional two seconds.	6. Tests will be conducted at a test facility with an M/G set and three associated ASDs using simulated full load characteristics of the RIPs and disconnecting power to M/G sets while operating at full speeds, or analyses will be performed to demonstrate applicability of prior tests and test results to the as-built RFC System MG sets and ASDs.	6. After the power supply breakers open to the MG set, the ASD output frequency remains within 1% of the original output frequency for at least one second, and then for an additional two seconds the ASD output frequency shall be equal to or greater than a curve defined by a rate of frequency decrease of 10% per second.
7. Each channel of the RFC System digital controller is powered by separate non-Class 1E uninterruptible power supplies.	7. Tests will be performed by providing a test signal in only one uninterruptible power supply at a time.	7. The test signals exist in only one digital control channel at a time.
8. Each of the four RFC System core plate differential pressure sensors is powered from its respective divisional Class 1E power supply. In the RFC System, independence is provided between Class 1E divisions, and between Class 1E divisions and non-Class 1E equipment.	8. a. Tests will be performed on the RFC System by providing a test signal in only one Class 1E division at a time. b. Inspection of the as-built Class 1E divisions in the RFC System will be performed.	8. a. The test signal exists only in the Class 1E division under test in the RFC System. b. In the RFC System, physical separation or electrical isolation exists between Class 1E divisions. Physical separation or electrical isolation exists between these Class 1E divisions and non-Class 1E equipment.

2.2.9 Automatic Power Regulator System

Design Description

The Automatic Power Regulator (APR) System controls reactor power during reactor startup, power generation, and reactor shutdown by commands, either directly or indirectly, to change rod positions, or to change reactor recirculation flow or load setpoint. The APR System consists of redundant digital controllers and has the interfaces shown in the control interface diagram on Figure 2.2.9.

The APR System is classified as non-safety-related.

The APR System operates in either manual or automatic control mode. The system control logic is performed by redundant, digital controllers. The digital controllers receive inputs from and send outputs to interfacing systems via the non-essential data communication function (NECF). The APR System performs power control calculations and provides system outputs to interfacing systems to allow coordinated control.

The APR System digital controllers are located in the Control Building.

Inspections, Tests, Analyses and Acceptance Criteria

Table 2.2.9 provides a definition of the inspections, tests and/or analyses, together with associated acceptance criteria, which will be undertaken for the APR System.

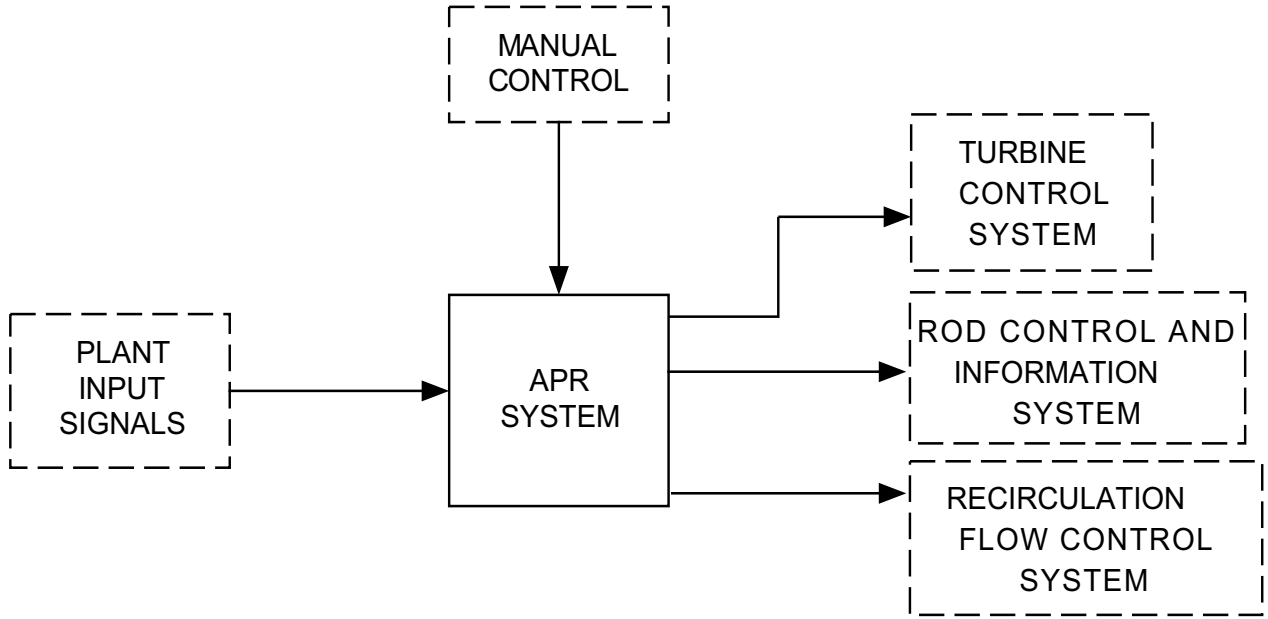

NOTE:
1. INTERCONNECTIONS MAY BE FIBER-OPTIC OR METALLIC.

Figure 2.2.9 Automatic Power Regulator System Control Interface Diagram

Table 2.2.9 Automatic Power Regulator System

Inspections, Tests, Analyses and Acceptance Criteria		
Design Commitment	**Inspections, Tests, Analyses**	**Acceptance Criteria**
1. The equipment comprising the APR System is defined in Section 2.2.9.	1. Inspections of the as-built system will be conducted.	1. The as-built APR System conforms with description in Section 2.2.9.
2. The system control logic is performed by redundant digital controllers.	2. Tests will be performed by simulating failure of each operating APR System digital controller.	2. There is no loss of APR System output upon loss of any one digital controller.

2.2.10 Steam Bypass and Pressure Control System

Design Description

The Steam Bypass and Pressure Control (SB&PC) System controls the reactor pressure during reactor startup, power generation, and reactor shutdown by control of the turbine bypass valves and signals to the Turbine Control System which controls the turbine control valves. The SB&PC System consists of redundant digital controllers and has the interfaces shown in the control interface diagram on Figure 2.2.10.

The SB&PC System is classified as non-safety-related.

The SB&PC System operates in either manual or automatic control modes. The system control calculations and logic are performed by redundant digital controllers.

The SB&PC System digital controllers are located in the Control Building.

Inspections, Tests, Analyses and Acceptance Criteria

Table 2.2.10 provides a definition of the inspections, tests, and/or analyses, together with associated acceptance criteria, which will be undertaken for the SB&PC System.

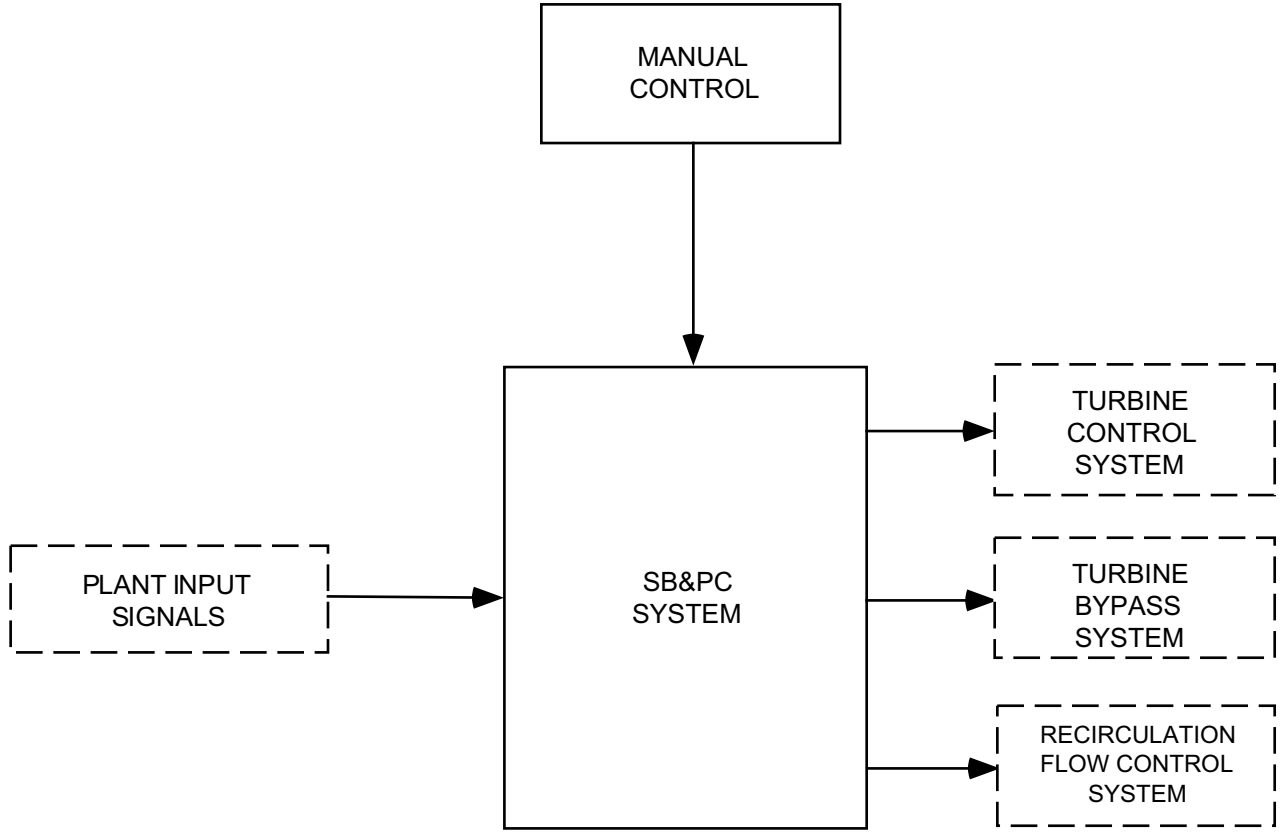

NOTE:
1. INTERCONNECTIONS MAY BE FIBER-OPTIC OR METALLIC.

Figure 2.2.10 Steam Bypass and Pressure Control System Control Interface Diagram

Table 2.2.10 Steam Bypass and Pressure Control System

Inspections, Tests, Analyses and Acceptance Criteria		
Design Commitment	**Inspections, Tests, Analyses**	**Acceptance Criteria**
1. The equipment comprising the SB&PC System is defined in Section 2.2.10.	1. Inspections of the as-built system will be conducted.	1. The as-built SB&PC System conforms with the description in Section 2.2.10.
2. The SB&PC System consists of redundant digital controllers.	2. Tests will be performed by simulating failure of each operating SB&PC System digital controller.	2. There is no loss of SB&PC System output upon loss of any one digital controller.
3. The SB&PC System controls the reactor pressure during reactor startup, power generation, and reactor shutdown by control of the turbine bypass valves and signals to the Turbine Control System which controls the turbine control valves.	3. A test will be conducted by simulating an increasing reactor pressure signal.	3. Signals to decrease the reactor pressure occur for the turbine bypass valves and the Turbine Control System.

2.2.11 Plant Computer Functions

Design Description

The Plant Computer Functions (PCFs) are a set of control, monitoring, and data calculation functions that are implemented on digital processing units and associated peripheral equipment. Redundant processors are used for functions that are important to plant operation. The PCFs are classified as non-safety-related.

The PCFs perform local power range monitor (LPRM) calibrations and calculations of fuel operating thermal limits data which is provided to the automated thermal limit monitor (ATLM) function of the Rod Control & Information System (RCIS) for the purpose of updating rod block setpoints.

The PCFs also include top-level controller functions which monitor the overall plant conditions, issue control commands and adjust setpoints of lower level controllers to support automation of the normal plant startup, shutdown and power range operations. In the event that abnormal conditions develop in the plant during operations in the automatic mode, these functions automatically revert to the manual mode of operation.

Inspections, Tests, Analyses and Acceptance Criteria

Table 2.2.11 provides a definition of the inspections, tests and/or analyses, together with associated acceptance criteria, which will be undertaken for the PCFs.

Table 2.2.11 Plant Computer Functions

Inspections, Tests, Analyses and Acceptance Criteria		
Design Commitment	**Inspections, Tests, Analyses**	**Acceptance Criteria**
1. The equipment performing the PCFs is defined in Section 2.2.11.	1. Inspections of the as-built system will be conducted.	1. The as-built equipment implementing the PCFs conforms with the description in Section 2.2.11.
2. The PCFs provide LPRM calibration and fuel operating thermal limits data to the ATLM function of the RCIS.	2. Tests of the as-built PCFs will be conducted using simulated plant input signals.	2. LPRM calibration and fuel thermal limits data are received by the ATLM function of the RCIS.
3. In the event that abnormal conditions develop in the plant during operations in the automatic mode, the PCFs automatically revert to the manual operating mode.	3. Tests of the as-built PCFs will be conducted using simulated abnormal plant input signals, while the PCFs are in the automatic operating mode.	3. Upon receipt of the abnormal plant input signals, the PCFs automatically revert to the manual operating mode.

2.2.12 Refueling Platform Control Computer

No entry for this system.

2.2.13 CRD Removal Machine Control Computer

No entry for this system.