Westinghouse Non-Proprietary Class 3

WCAP-17331-NP
Revision 0

October 2010

Stress Report for STP Units 3 & 4 Spent Fuel Storage Rack Baseline Design

Westinghouse

WESTINGHOUSE NON-PROPRIETARY CLASS 3

WCAP-17331-NP
Revision 0

Stress Report for STP Units 3 & 4 Spent Fuel Storage Rack Baseline Design

Author: **Brian M. Albert***
Mechanical/Civil Design & Analysis I

October 2010

Reviewer: **Andrew M. Dokmanovich***
Mechanical/Civil Design & Analysis II

Approved: **Jeff R. Joyce*, Manager**
Mechanical/Civil Design & Analysis I

*Electronically approved records are authenticated in the electronic document management system.

Westinghouse Electric Company LLC
1000 Westinghouse Drive
Cranberry Township, PA 16066

TABLE OF CONTENTS

1 INTRODUCTION

This report contains stress results from the seismic and structural analyses of the baseline spent fuel storage rack design for South Texas Project Units 3 & 4. The racks are designed to store spent fuel assemblies in the spent fuel pool. The bases for the analyses are the design requirements specified by the following documents:

1. DCD Part 2, Tier 2, Section 9.1 "Fuel Storage and Handling," U.S. ABWR Design Control Document, GE Nuclear Energy, Revision 4, March 1997 [1].

2. DCD Tier 2, Appendix 3A, "Seismic Soil Structure Interaction Analysis," U.S. ABWR Design Control Document, GE Nuclear Energy, Revision 4, March 1997 [2].

2 DESCRIPTION OF SPENT FUEL STORAGE RACKS

The storage racks are composed of individual storage cells made of austenitic stainless steel. The cells are welded to a base support assembly and to one another to form an integral structure. The racks utilize a neutron absorbing material which is attached to each cell. The spent fuel racks are free standing racks and are not anchored to the floor or walls of the spent fuel pools. The base support assembly contains adjustable bearing pads that allow the racks to sit on top of the pool floor liner. During seismic events, the racks may slide along the floor of the spent fuel pool.

The baseline spent fuel storage rack layout in the spent fuel pool is shown in Figure 2-1 and summarized in Table 2-1. As shown, the spent fuel pool is filled with racks of varying sizes. The total capacity of the spent fuel pool is 3,410 fuel assemblies. Each of the various spent fuel storage racks are very similar to the 11x11 spent fuel storage rack detailed in Figure 2-2.

Table 2-1

SPENT FUEL RACK SUMMARY			
SIZE	QTY.	NO. CELLS	TOTAL CELLS
10 X 11	6	110	660
11 X 8	2	88	176
11 X 9	5	99	495
11 X 11	12	121	1452
11 X 12	3	132	396
11 X 7	3	77	231
		SUM	3410

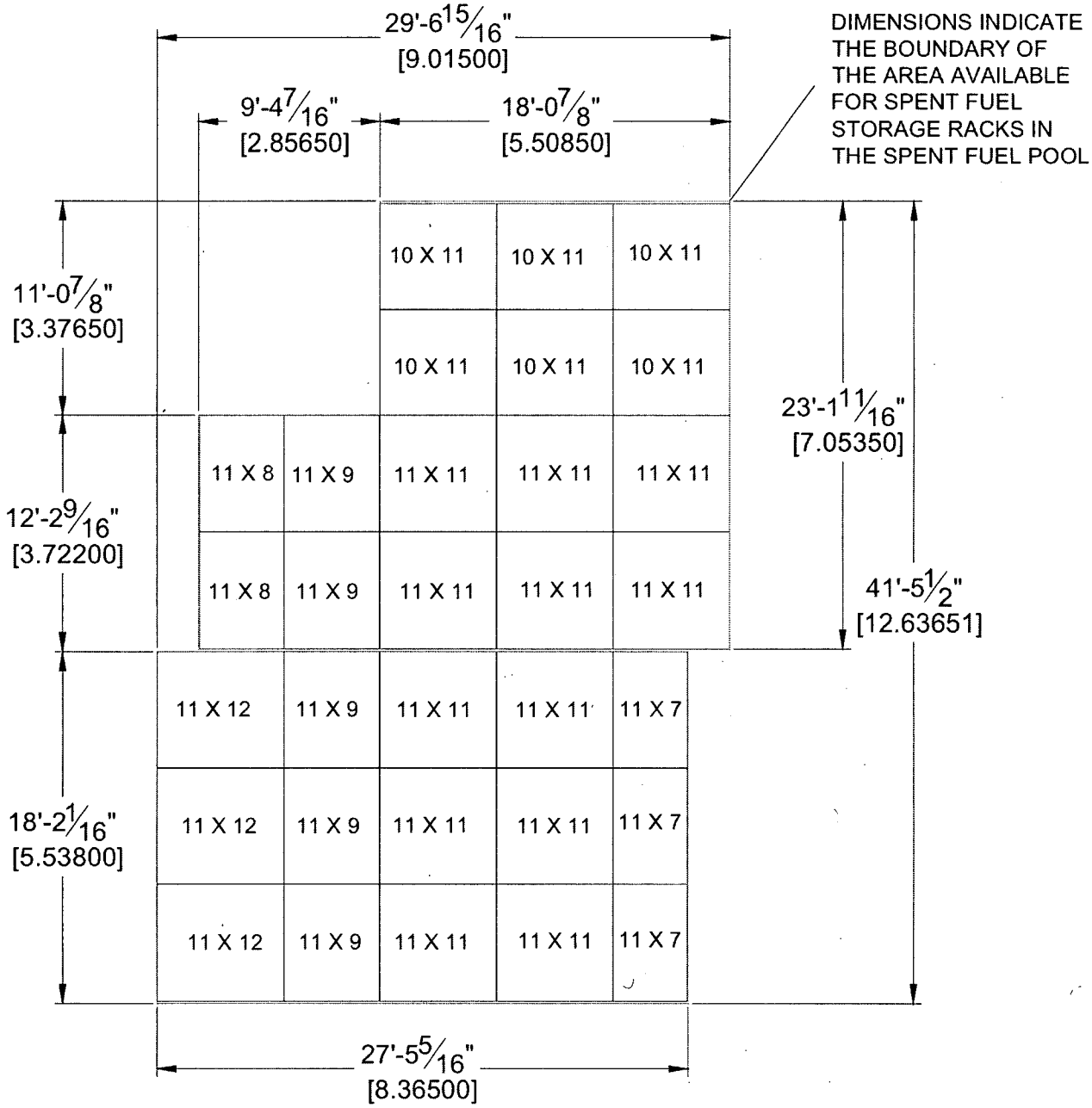

Figure 2-1
Spent Fuel Pool Layout

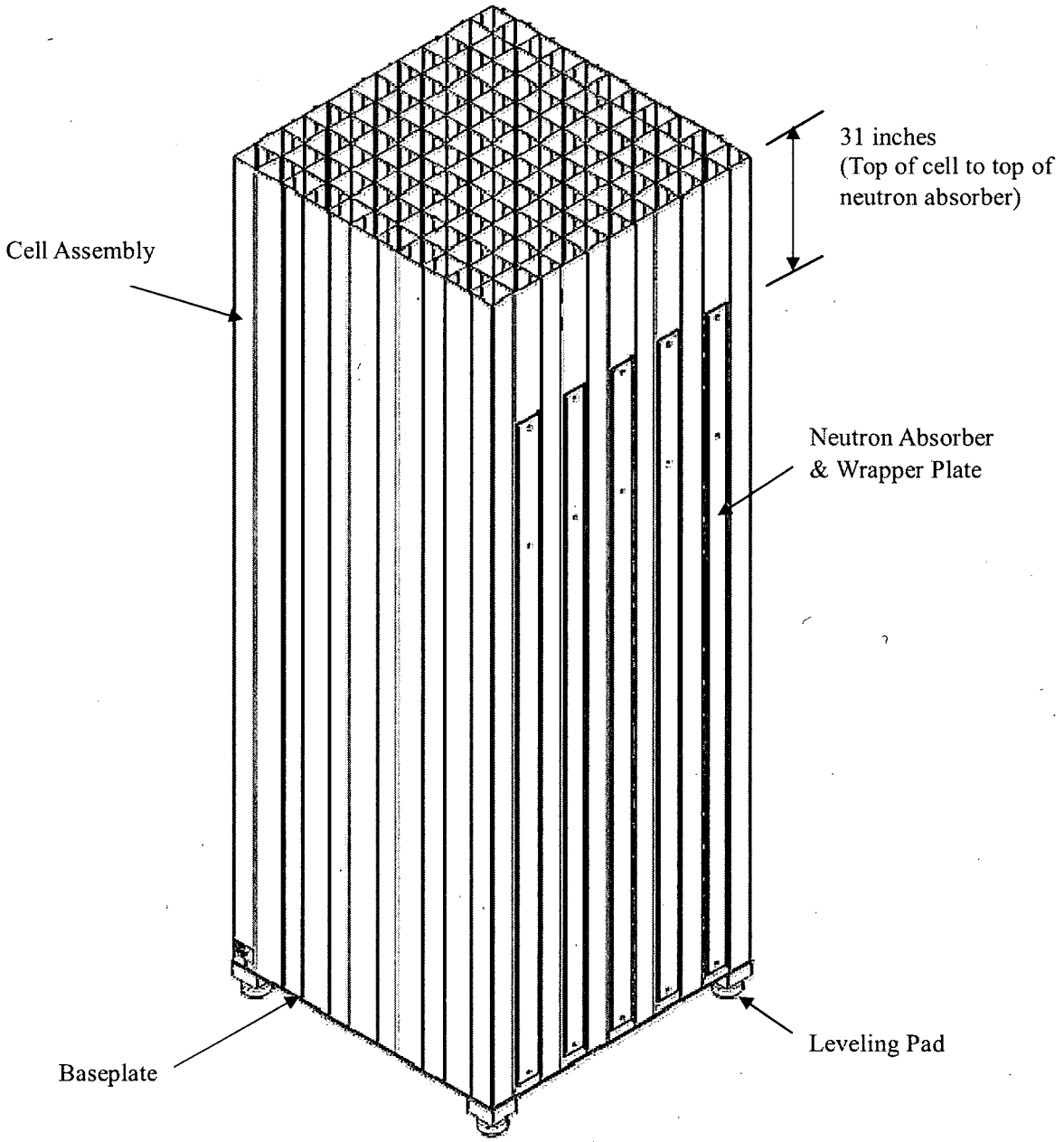

Figure 2-2
STP Spent Fuel Storage Rack Arrangement, 11 x 11 Fuel Storage Rack Isometric

3 LOADING CONDITIONS AND STRESS CRITERIA

The Spent Fuel Storage Racks were evaluated for the load conditions specified in Table 3-1 below.

Table 3-1
Fuel Storage Rack Load Combinations & Applicable Codes

Load Case	Load Combination(1)	Applicable Code	ASME Service Level
Normal	$D + T_o$	ASME NF	A
Normal (Stuck Fuel Assembly)(2)	$D + T_o + P_F$	ASME NF	A
Faulted	$D + T_a + SSE$	ASME NF	D
Faulted (Dropped Fuel Assembly) (3)	$D + T_o + F_D$	ASME NF (3)	D

(1) Load Abbreviations:
- D Deadweight
- T_o Operating Thermal Load
- T_a Highest Abnormal Temperature Thermal Load
- P_F Stuck Fuel Assembly
- F_D Dropped Fuel Assembly
- SSE Safe Shutdown Earthquake

(2) According to [1], the stuck fuel assembly load case is bounded by the seismic load case and a separate evaluation is not required.

(3) For the dropped fuel assembly load case, it is only required that the functional capability of the fuel racks are maintained and the K_{eff} of the fuel assemblies remains below 0.95. The ASME NF code may be used as a guide to help demonstrate the acceptability of the Spent Fuel Storage Racks.

4 SEISMIC ANALYSIS OF THE SPENT FUEL STORAGE RACKS

The purpose of this subsection is to demonstrate the adequacy of the spent fuel storage racks to store fuel under seismic loading conditions. Finite element models of each spent fuel rack were created in ANSYS®, and an example is shown in Figure 4-1 below. The detailed ANSYS models were converted to superelements and then combined to form a whole pool model of the spent fuel pool. Fuel assemblies were part of the rack models and include nonlinear contact elements between the racks and fuel assemblies. The whole pool model also considers the fluid-structure interaction between the pool water and the spent fuel racks. The whole pool ANSYS® model is detailed in Figure 4-2.

The fuel racks were loaded by artificial displacement time histories developed from the spectra provided in [2]. Stresses in the racks were checked against ASME design limits to ensure structural adequacy of the design. Details of the seismic analysis and stress qualifications are provided in Reference [3].

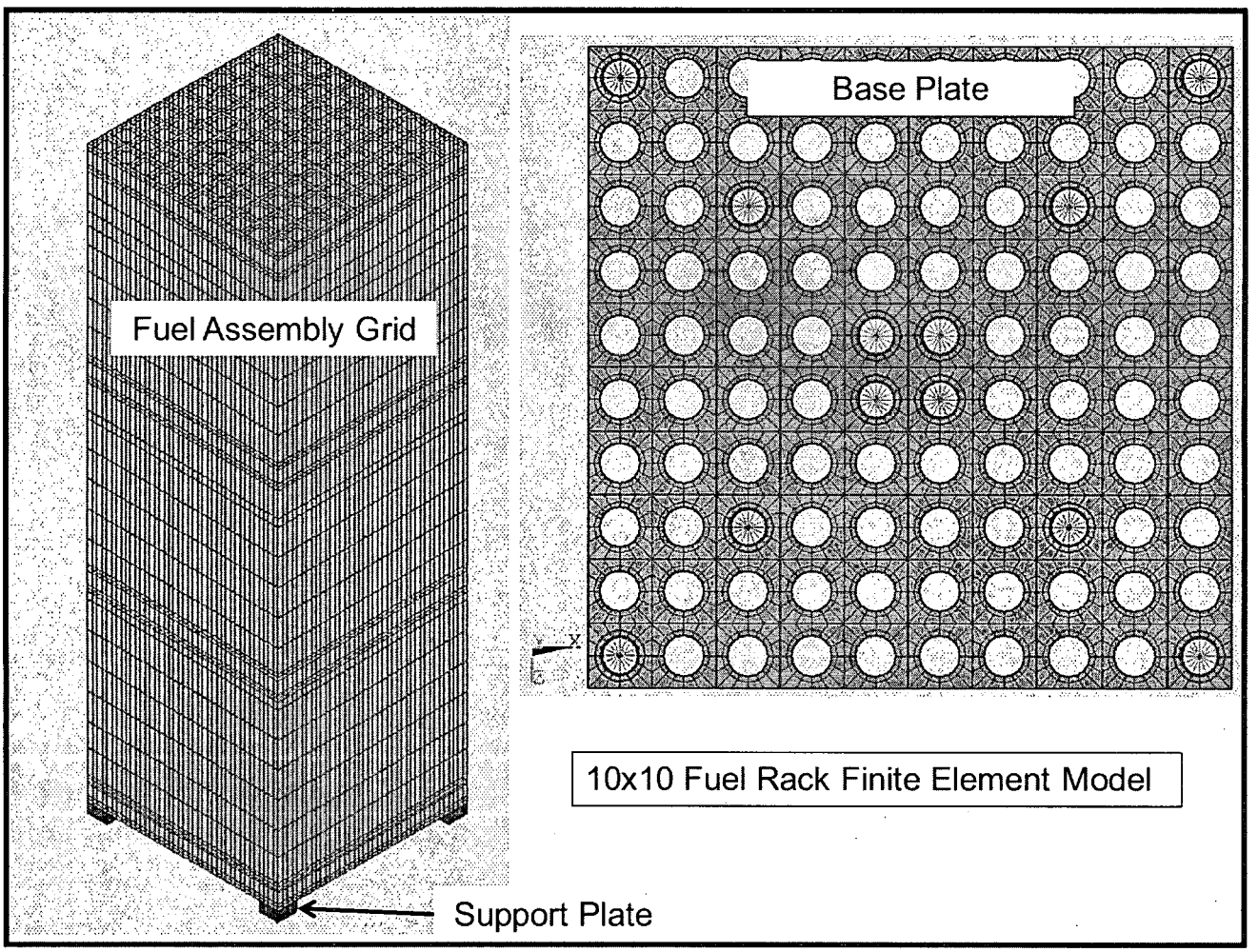

Figure 4-1
ANSYS® 10 x 10 Fuel Rack Finite Element Model

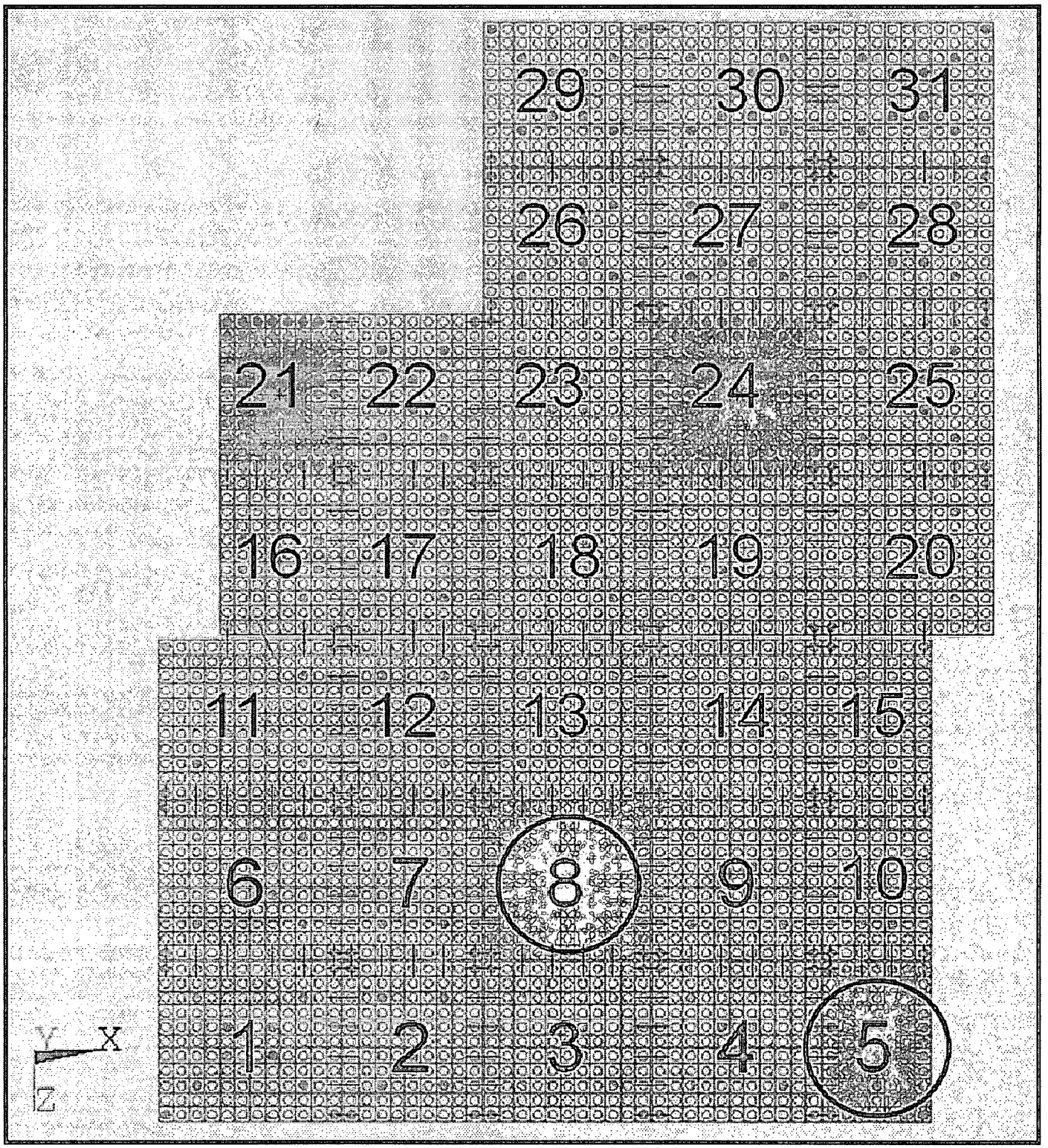

Figure 4-2
ANSYS® Whole Pool Model with Rack Numbering Convention

5 INTEGRITY OF SPENT FUEL STORAGE RACKS UNDER FUEL HANDLING ACCIDENT CONDITIONS

5.1 FUEL ASSEMBLY DROP SCENARIOS

The assumed fuel assembly was a representative fuel assembly plus the handling tool, having a total maximum dry weight of 572Kg (1263lbs). It was postulated to be dropped from a height of 1.8m (5.9ft) above the top of the rack as described in [1]. Details of the analysis are provided in [4].

5.1.1 Drop Orientations

Three drop orientations were considered. These were:

- The drop of a fuel assembly onto the top of a rack with the assembly in a vertical position
- The drop of a fuel assembly onto the top of a rack with the assembly in an inclined position.
- The drop of a fuel assembly through an empty rack cell to the bottom of the rack

These orientations are shown in Figures 5-1, 5-2 and 5-3, respectively.

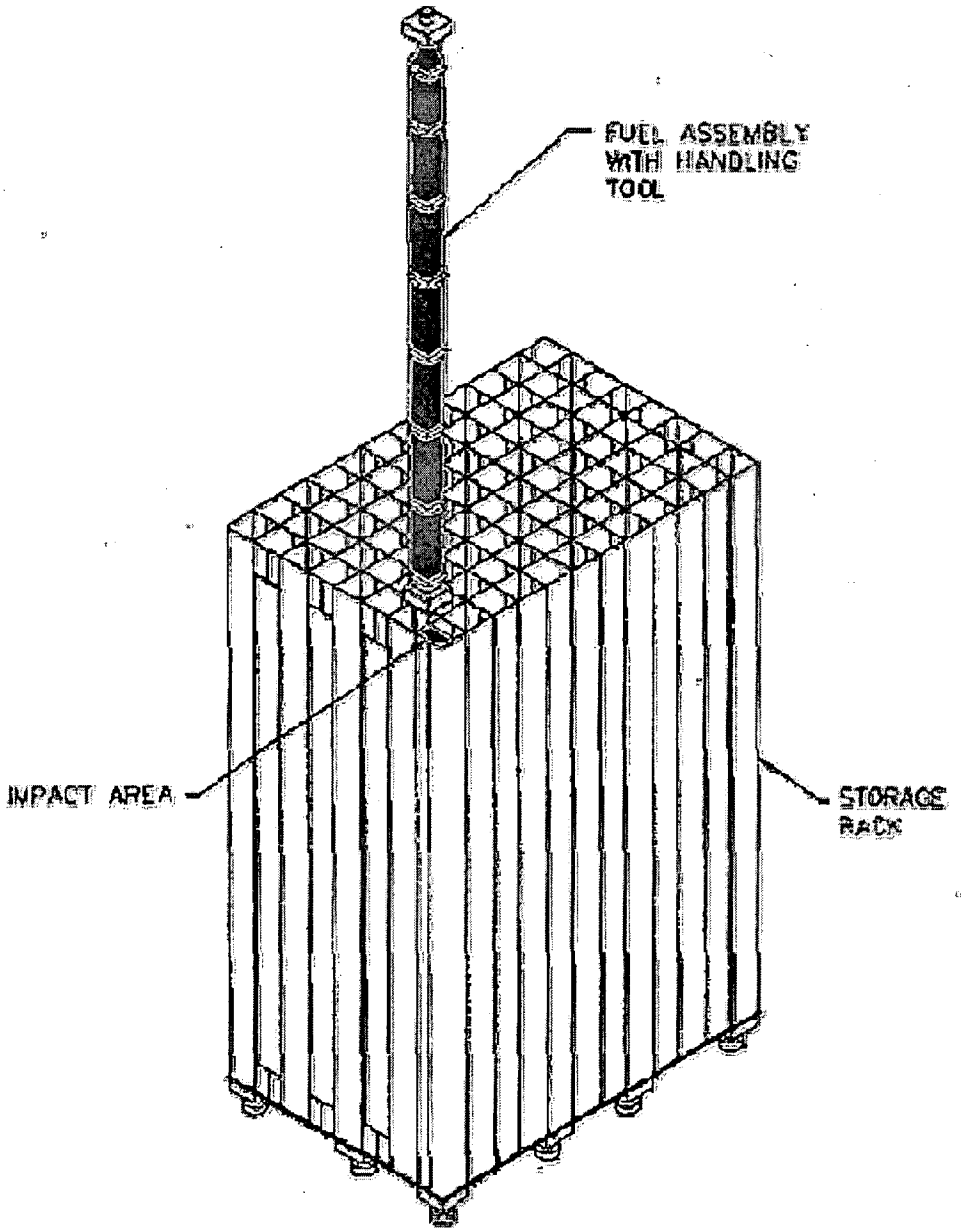

Figure 5-1 Fuel Assembly Drop on Top of Rack

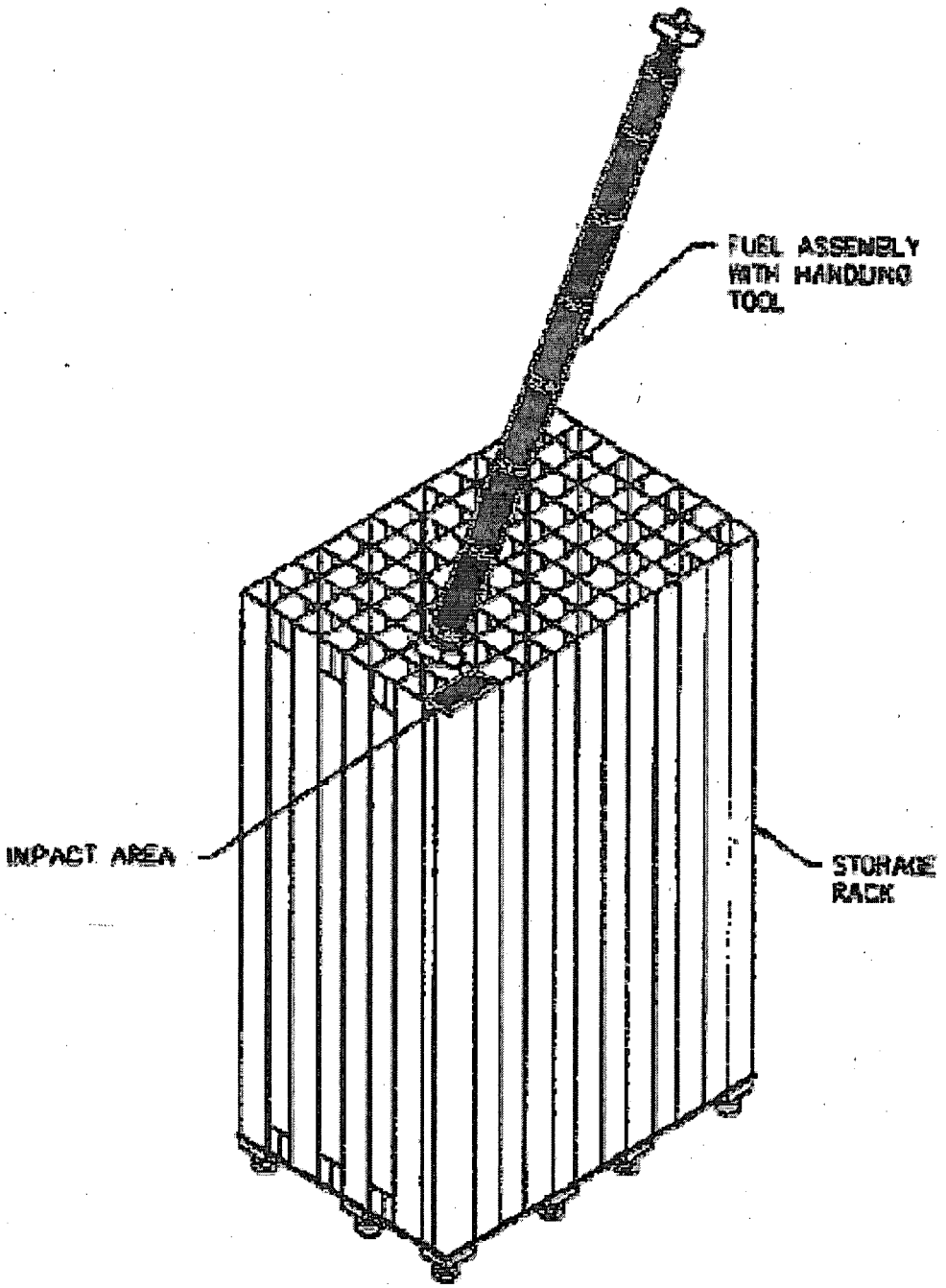

Figure 5-2 Fuel Assembly Drop on Top of Rack, Inclined Orientation

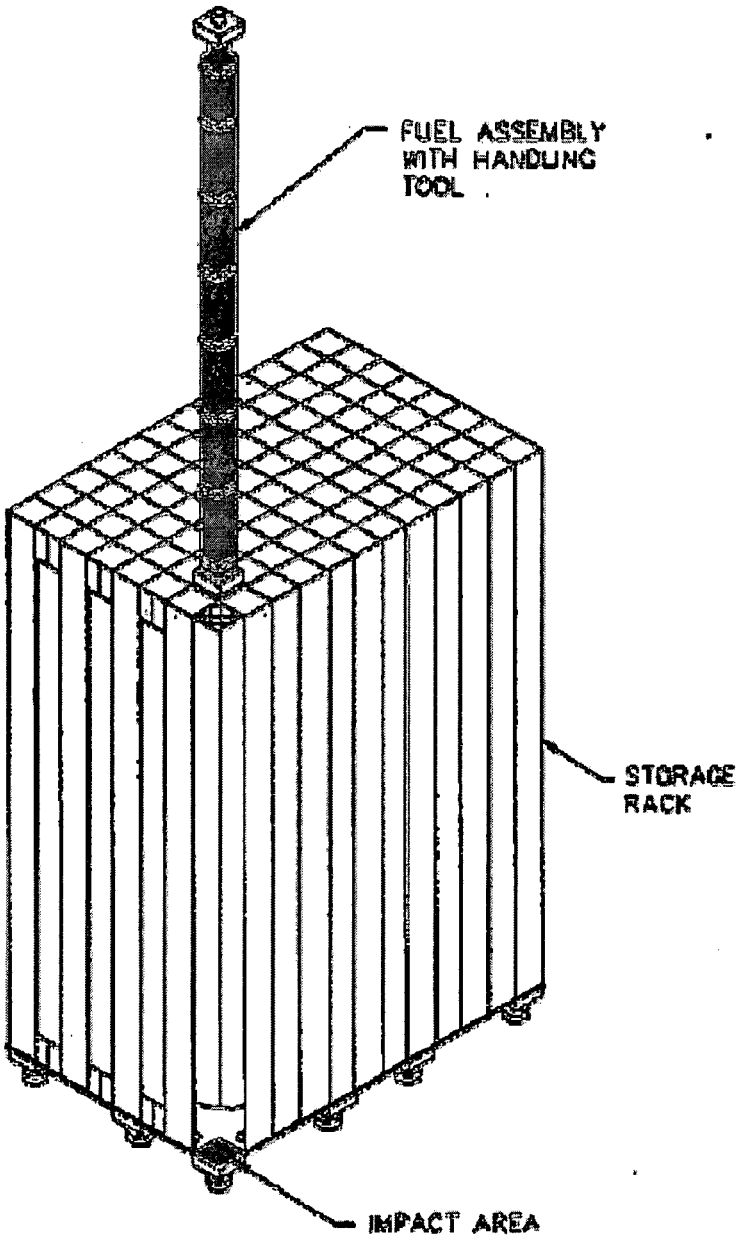

Figure 5-3 Fuel Assembly Drop Through to Bottom of Rack

5.1.2 Drop Locations

The fuel assembly was dropped at seven different locations to find the location with maximum effect. The locations are depicted below in Figure 5-4.

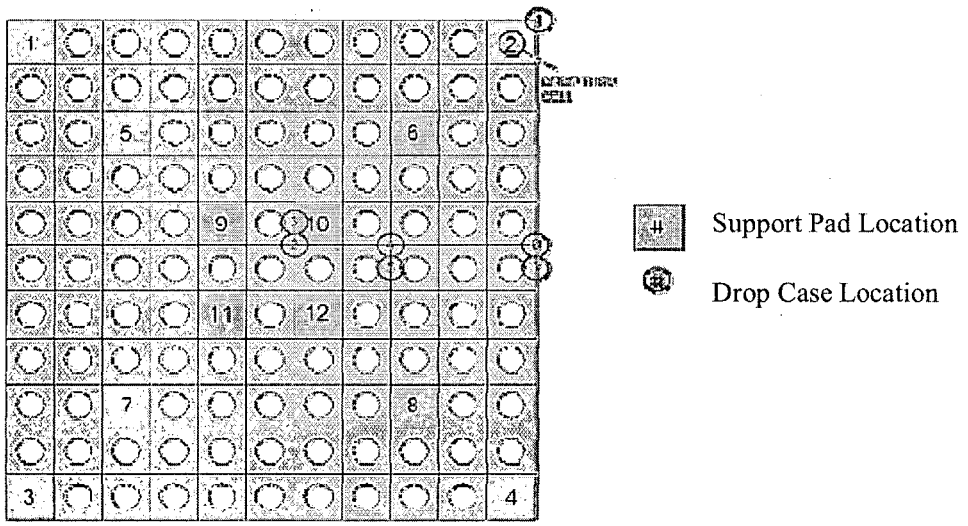

Figure 5-4 Support Pad and Fuel Assembly Drop Locations

5.2 FUNCTIONAL CAPABILITY OF THE SPENT FUEL STORAGE RACKS

It must be shown that the spent fuel racks will retain functional capability. An explicit dynamic drop analysis of a fuel assembly impacting the fuel rack was performed in [4] to ensure that the integrity of the rack is maintained and to determine the forces transferred to the vault floor. A fuel assembly dropped in the vertical position was judged to be the most limiting condition.

The plastic deformation ranges between 3.76 and 6.05 inches for the cases evaluated in [4]. The magnitude of the deformation depends on where the fuel assembly impacts the top of the fuel rack. In addition, the crushing does not impair the ability of the rack to maintain the fuel in a non-critical state.

6 RESULTS AND CONCLUSIONS

The spent fuel racks were evaluated to the criteria described in Section 3.0 and the results demonstrate the structural adequacy of the spent fuel racks for the Normal and Faulted load cases. The stresses in the spent fuel rack meet ASME NF stress requirements for both the Normal and Faulted (seismic) loads conditions. Table 6-1 below summarizes the maximum stresses calculated in [3]. For the Faulted (Dropped Fuel Assembly) load condition the racks are able to withstand the dropped fuel assembly impact without losing functional capability or damaging the neutron absorbing material. The rack's cell walls will deform a maximum of 6.05 inches, which is significantly less than the acceptable amount of 10 inches as shown in [4]. Therefore, it is concluded that the functional capability of the fuel racks is maintained during the Faulted dropped fuel assembly load condition.

Table 6-1

Summary of Spent Fuel Rack Stresses

Component	Load Case	Stress Type	Actual	Allowable
Cell Wall	Normal	Membrane (ksi)	7.4	15.7
		Membrane + Bending (ksi)	7.4	23.6
	Faulted	Membrane (ksi)	27.2	27.6
		Membrane + Bending (ksi)	74.4(1)	41.4
Leveling Screw	Normal	Combined Axial & Bending Interaction Ratio	0.02	1.0
	Faulted	Combined Axial & Bending Interaction Ratio	0.93	1.0
Baseplate	Faulted	Membrane (ksi)	5.4	27.6
		Membrane + Bending (ksi)	20.9	41.4
Support Pad	Faulted	Membrane + Bending (ksi)	42.9(2)	41.4
Cell-to-Cell Weld Stress	Normal	Shear	4.45	9.2
	Faulted	Shear	19.9	28.6
Cell-to-Baseplate Weld Stress	Normal	Shear	1.71	9.2
	Faulted	Shear	12.44	28.6

Notes:

1. The cell wall membrane plus bending stress exceeds the allowable limit only locally where the fuel assembly impacts the cell wall. The high stress is expected to cause local distortion, but structural integrity of cell will remain (see discussion in [3]).

2. The support pad membrane plus bending stress exceeds the allowable limit only in a very local region. The high stress concentration does not represent an average stress across the plate and is acceptable (see discussion in [3]).

7 REFERENCES

1. DCD Part 2, Tier 2, Section 9.1 "Fuel Storage and Handling," U.S. ABWR Design Control Document, GE Nuclear Energy, Revision 4, March 1997.

2. DCD Part 2, Tier 2, Appendix 3A, "Seismic Soil Structure Interaction Analysis," U.S. ABWR Design Control Document, GE Nuclear Energy, Revision 4, March 1997.

3. Westinghouse Calculation CN-MRCDA-10-58, Rev. 0, "South Texas Units 3 and 4: Spent Fuel Storage Rack Seismic Analysis."

4. Westinghouse Calculation CN-RVHP-10-33, Rev. 0, "South Texas Project (STP) Units 3 & 4 Fuel Storage Rack Fuel Assembly Drop Evaluation."