[NOCS 002542, 001858]

Procedure Approval and Transmittal Sheet

Procedure #	Revision #	Title
SP-178	29A	Containment Leakage Test - Type "A" Including Liner Plate

Reason Performed (Schedule, WO#, Testing, etc.)	WO	Work Order Task # 702983

Comments:	SAT

TECHNICAL SPECIFICATION Acceptance Criteria Met	OTHER (NON-TECHNICAL SPECIFICATION) Acceptance Criteria Met
☒ YES ☐ NO ☐ N/A	☒ YES ☐ NO ☐ N/A

Corrective/Follow-up Action Initiated (NCR, PRR, ECR, WO, etc.) and listed below:

None

1. *The enclosed information was reviewed and approved according to the steps outlined in this procedure.*
2. *Prior to returning any equipment to operable status and this is a SP or test, I have met with the SSO/CRS to review the results of the SP or test.*
3. *I have reviewed the information enclosed and am satisfied that the above indicated result has been obtained, data is complete, and appropriate procedure pages and checklists are attached.*

Designated Supervisor:	Position:	Date:
R Forty	Supv. Eq. Perf	3/2/6

P/210

ATTACHMENT 6
Sheet 1 of 1
TEMPORARY CHANGE FORM

FORM PRO-NGGC-0204-6-7

Description			
Procedure No. SP-178	Revision No 29	Minor Change No C	Temp Chg Expires on (Date) 01-31-06
Procedure Title Containment Leakage Test-Type 'A' including CAPS PLATE			NCR No. N/A
Impacted Site ☐ BNP ☒ CR3 ☐ HNP ☐ NCP ☐ RNP			
Type of Action (Check Applicable Box) ☒ Temp Change Permanent to Follow ☐ Temp Change No Permanent to Follow	Affected Page Nos. pg 128 and 129		
Description of Procedure Action: Align breaker per Attachment 3E procedure had incorrect breaker designation.			
Basis for the Procedure Action: Correct breaker designation identified in OP-700B rev 63			
Originator (Print Name) A. M. Barnes			Date 12-3-05
Job Supervisor (Print Name)			Date
Interim Approval			
1st Approver (Print) R E Murray	1st Approver (Sign) R E Murray		Date 12/3/05
2nd Approver (SSO) (Print) Charles J. Morris	2nd Approver (SSO) (Sign) [signature]		Date 12/3/5
Tech and REG-NGGC-0010 Reviews			
Technical Reviewer (Print)	Technical Reviewer (Sign)		Date Completed
REG-NGGC-0010 (Check Applicable Box) ☐ Exempt ☐ Screening ☐ Evaluation			Reg AR No. / Date Completed
Final Approval [BNP, HNP]			
Final Approval Required by (Date)	☐ Approved		☐ Rejected
Final Approval (Print)	Final Approval (Sign)		Date
PNSC Chairman (Print) (if applicable)	PNSC Chairman (Sign)		Date
Removal/Early Expiration [ALL]			
Early Expiration Date	Approval (Sign)		Date

QA RECORD

Progress Energy

C
Continuous
Use

PROGRESS ENERGY

CRYSTAL RIVER UNIT 3

PLANT OPERATING MANUAL

SP-178

CONTAINMENT LEAKAGE TEST-TYPE "A" INCLUDING LINER PLATE

BF 11/14

ATTACHMENT 3E
BREAKER LIST

		Action Completed Initial/Date	Returned to Normal Initial/Date	Returned to Normal Independent Verification Initial/Date
	b. ES-MCC-3A1			
	Breaker 4A (BSV-3)	/	/	/
	Breaker ~~1G~~ 1D (CFV-11)	/	/	/
	Breaker ~~2B~~ 2C (CFV-12)	/	/	/
	Breaker ~~2C~~ 2D (CFV-15)	/	/	/
	Breaker 3B (CFV-16)	/	/	/
	Breaker 6A (AHV-1B)	/	/	/
	Breaker 8A (AHV-1C)	/	/	/
	c. ES-MCC-3A2			
	Breaker 5D (CAV-1)	/	/	/
	Breaker 6C (CAV-3)	/	/	/
	Breaker 9A (CAV-126)	/	/	/
	Breaker 8C (MUV-260)	/	/	/
	Breaker 10B (MUV-261)	/	/	/
	Breaker 8A (MUV-258)	/	/	/
	Breaker 8B (MUV-259)	/	/	/
	Breaker 9B (WDV-3)	/	/	/
	Breaker 9C (WDV-60)	/	/	/
	Breaker 10C (WDV-94)	/	/	/
	Breaker 10A (WDV-406)	/	/	/
	Breaker 6D (CAV-4)	/	/	/
	Breaker 5C (CAV-5)	/	/	/
	d. ES-MCC-3A3			
	Unit 2 EG (MUV-567)	/	/	/
	e. ES-MCC-3B2			
	Breaker 2C (BSV-4)	/	/	/

ATTACHMENT 3E
BREAKER LIST

		Action Completed Initial/Date	Returned to Normal Initial/Date	Returned to Normal Independent Verification Initial/Date
	Breaker 5C (WDV-405)	/	/	/
	f. ~~ES-MCC-3AB~~			
05 MC 3B3	Breaker ~~2D~~ 3E (MUV-18)	/	/	/
05 MC 3B2	Breaker ~~3C~~ 3F (MUV-27)	/	/	/
	Breaker 5C (DHV-91)	/	/	/
	Breaker 7D (DWV-160)	/	/	/
5.	The following components are aligned to support the ILRT. Contact the ILRT Test Supervisor prior to manipulating these components. If Tags are required to identify components perform this step.			
	Valve / Location			
	AHV-1A / CB-ESFB	M 1/2/3	/	/
	AHV-1D / CB-ESFB	M 1/2/3	/	/
	CAV-2 / CB-ESFB	M 1/2/3	/	/
	CFV-29 / CB-ESFAB	M 1/2/3	/	/
	CFV-42 / CB-ESFAB	M 1/2/3	/	/
	CFV-42 / CB-ESFAB	N/A /	/	/
	CIV-34 / CB-ESFAB	M 1/2/3	/	/
	CIV-35 / CB-ESFAB	M 1/2/3	/	/
	CIV-40 / CB-ESFAB	M 1/2/3	/	/
	CIV-41 / CB-ESFAB	M 1/2/3	/	/
	MUV-49 / CB-ESFAB	M 1/2/3	/	/
	MUV-543 / CB-ESFA	M 1/2/3	/	/
	MUV-545 / CB-ESFB	M 1/2/3	/	/
	MUV-253 / CB-ESFB	M 1/2/3	/	/

TITLE	ES MCC 3A1 (MTMC-3)	**ES 3A1**
LOCATION	95' AUX BLDG	
FEEDER	480V ES BUS 3A UNIT 3D	PANEL DRAWING 206-054

BKR. NO.	LOAD COMPONENT IDENTIFICATION		NOR. POS. (√)	
1AL	SFP-1A	CONTROL POWER TRANSFORMER		
1AR	DHV-5 & FWV-15	CONTROL POWER TRANSFORMER		
1BL	ACDP-51	CONTROL COMPLEX DIST PANEL	ON	
1BR	RMP-A14	480V OUTLET	ON	
1C	DHV-5	A DECAY HEAT PUMP DISCH TO RCS	ON	
1D	CFV-11	A CORE FLOOD TANK SAMPLE	ON	
2AL	VBDP-5/9	C VITAL BUS (VIA INVERTER VBIT-1C)	ON	
2AR	SPARE		ON	
2BL	VBDP-12	REGULATED DIST PANEL	ON	
2BR	VBDP-13	REGULATED DIST PANEL	OFF	
2C	CFV-12	B CORE FLOOD TANK SAMPLE	ON	
2D	CFV-15	B CORE FLOOD TANK VENT TO WASTE GAS	ON	
3AL	VBDP-3/8	A VITAL BUS (VIA INVERTER VBIT-1A)	ON	
3AR	SPARE		ON	
3B	CFV-16	A CORE FLOOD TANK VENT TO WASTE GAS	ON	
3C	DHV-3	DECAY HEAT DROPLINE SUCT	LO	
3DL	SPACE			
3DR	ACDP-116	CHEM RAD DIST PANEL	ON	
4A	BSV-3	A BUILDING SPRAY PUMP FLOW CONTROL	ON	
4B	DHV-42	A DECAY HEAT PUMP RB SUMP SUCT	ON	
4C	SPACE			

TITLE	ES MCC 3B2 (MTMC-6)	**ES 3B2**
LOCATION	95' AUX BLDG	
FEEDER	480V ES BUS 3B UNIT 3D	PANEL DRAWING 206-057

BKR. NO.	LOAD COMPONENT IDENTIFICATION		NOR. POS. (√)	
1AL	AHP-1C/1D	CC AIR COMPRESSORS (NOTE 1)	OFF	
1AR	RMP-A15	480V OUTLET	ON	
1B	AHF-15B	DCP-1B AIR HANDLING UNIT	ON	
1C	AHF-44B	SAMPLE ROOM EXHAUST FAN	ON	
1D	CAHE-3B	B BAST HEATER	ON	
2A	MUV-27	NORMAL MAKEUP ISOL	ON	
2B	BSV-16	B BUILDING SPRAY PUMP SUCT ISO	LO	
2C	BSV-4	B BUILDING SPRAY PUMP FLOW CONTROL	ON	
3AL	DPBC-1B	BATTERY CHARGER	ON	
3AR	DPBC-1D	BATTERY CHARGER	ON	
3BL	DPBC-1F	BATTERY CHARGER	ON	
3BR	HTDP-2B	HEAT TRACE DIST PANEL	ON	
3C	SPACE			
3D	AHF-17B	CONTROL COMPLEX NORMAL SUPPLY FAN	ON	
4AL	VBDP-4/10	B VITAL BUS (VIA INVERTER VBIT-1B)	ON	
4AR	VBDP-6/11	D VITAL BUS (VIA INVERTER VBIT-1D)	ON	
4B	AHF-24B	INTERMEDIATE BUILDING SUPPLY FAN	ON	
4C	AHF-18B	CONTROL COMPLEX EMERGENCY SUPPLY FAN	ON	
5AL	HTDP-4B	HEAT TRACE DIST PANEL	ON	
5AR	ACDP-52	CONTROL COMPLEX DIST PANEL	ON	
5BL	VBDP-14	REGULATED DIST PANEL	ON	

NOTE 1: AHP-1C & 1D are selected off and de-energized to prevent cross connecting a system not rated for breathing grade air to the IA/SA system.

TITLE	ES MCC 3B3 (MTMC-22)	**ES 3B3**
LOCATION	95' AUX BLDG	
FEEDER	480V ES BUS 3B UNIT 2C	PANEL DRAWING 206-075

BKR. NO.	LOAD COMPONENT IDENTIFICATION		NOR. POS. (√)	
1A	SPACE			
1BDL	RELAY CUBICLE	SPACE OCCUPIED		
1BDR	MUV-23	MCC (EMER SOURCE)	ON	
1EG	MUV-58	MUP BWST SUCTION ISOL	ON	
1HJ	SPARE		ON	
1KN	AHF-54B	EFIC ROOM FAN	ON	
2A	SPACE			
2BDL	AHF-22C	CONTROL TRANSFORMER		
2BDR	MUV-25	MCC (NORMAL SOURCE)	ON	
2EG	SPARE		ON	
2HJ	SPARE		ON	
2KN	AHF-22C	B DIESEL GENERATOR ROOM FAN	ON	
3A	SPACE			
3BDL*	MTTR-6	BACKUP ES XFMR POWER (PRIMARY)	ON	
3BDR*	MTTR-9	OFFSITE PWR XFMR (ALTERNATE)	ON	
3EG	MUV-18	RCP SEAL INJECTION ISOL	ON	
3HJ	SPARE		ON	
3KN	AHF-19B	CONTROL COMPLEX RETURN AIR FAN	ON	
4A	SPACE			
4BDL	SPACE	No breaker installed. Not a SPARE. Handle spring returns to OFF.		
4BDR	AHHE-45-57	DED CHILLED WATER SYSTEM COIL UNIT FANS	ON	
4EG	DHV-211	DHHE-1B OUTLET ISOL/TEST	ON	
4HJ	SPARE		ON	
4KN	CHP-1B	CHILLED WATER SUPPLY PUMP	ON	

* Work involving any of these breakers is to be coordinated with the Energy Control Center.

ATTACHMENT 6
Sheet 1 of 1
TEMPORARY CHANGE FORM

FORM PRO-NGGC-0204-6-7

Description			
Procedure No. SP-178	Revision No 29	Minor Change No B	Temp Chg Expires on (Date) 12/21/05
Procedure Title: Containment Leakage Test - Type "A"			NCR No.
Impacted Site: ☐ BNP ☒ CR3 ☐ HNP ☐ NCP ☐ RNP			
Type of Action (Check Applicable Box): ☒ Temp Change Permanent to Follow ☐ Temp Change No Permanent to Follow	Affected Page Nos. 11, 122, 123, 199, 202, 204		
Description of Procedure Action: Page 11 - Delete "REMOVE". Page 122, 123 - Added BKR's for WSV's, Added "CAPS" to WSV-7, Changed Restored Position WSV-47/48. Page 199, 202, 204 - Changed RAV-6 to RAV-7, Added instructions for other gauges.			
Basis for the Procedure Action: Page 11 - bottles are located in Aux Bldg and don't need to be removed. Page 122, 123 - Added power supplies for WSV's for light indication, Corrected to agree with Normal positions. Page 199, 202, 204 - Tag error, Instructions for consistency.			
Originator (Print Name): Tim Howard			Date 12/02/05
Job Supervisor (Print Name): GEORGE ENGLER			Date 12/02/05
Interim Approval			
1st Approver (Print): Mary B. Warren	1st Approver (Sign): Mary B. Warren		Date 12.2.5
2nd Approver (SSO) (Print): BRYAN FERGUSON	2nd Approver (SSO) (Sign): Bryan Ferguson		Date 12.2.05
Tech and REG-NGGC-0010 Reviews			
Technical Reviewer (Print)	Technical Reviewer (Sign)		Date Completed
REG-NGGC-0010 (Check Applicable Box): ☐ Exempt ☐ Screening ☐ Evaluation			Reg AR No. / Date Completed
Final Approval [BNP, HNP]			
Final Approval Required by (Date)	☐ Approved		☐ Rejected
Final Approval (Print)	Final Approval (Sign)		Date
PNSC Chairman (Print) (if applicable)	PNSC Chairman (Sign)		Date
Removal/Early Expiration [ALL]			
Early Expiration Date	Approval (Sign)		Date

QA RECORD

Progress Energy

C
Continuous
Use

PROGRESS ENERGY

CRYSTAL RIVER UNIT 3

PLANT OPERATING MANUAL

SP-178

CONTAINMENT LEAKAGE TEST-TYPE "A" INCLUDING LINER PLATE

3.4.8 Prepare RB instrumentation and equipment for Integrated Containment Leak Rate Test by completing items listed on RB Preparation Checklist, Attachment 2, (Containment Preparation Checklist).

_____ / _____
Initials/Date

3.4.9 Termination of ILRT sensor instrument strings inside containment have been completed per Attachment 5, (ILRT Measurement System Installation and Checkout). Circuit terminations have been "rung out" or otherwise verified to be correct.

_____ / _____
Initials/Date

3.4.10 Modify LR system tubing to allow adequate flow for the verification test by removing LRV-63 and LRV-69 and installing a tubing jumper.

_____ / _____
Initials/Date

3.4.11 Secure Radiation Monitors RM-G16, RM-G17 and RM-G18 and associated Radiation Monitoring System) and remove G-M tubes per Attachment 2.

_____ / _____
Initials/Date

3.4.12 DISCONNECT ~~and REMOVE~~ H2 Analyzer Calibration (Span) Gas bottles (4)

_____ / _____
Initials/Date

3.4.13 Installation of temporary calibrated pressure gauges is complete per Attachment 17.

_____ / _____
Initials/Date

MECHANICAL PREREQUISITES

3.4.14 The following Temporary Alterations have been performed in accordance with Attachments listed:

Maintenance support of penetration preparations described in Attachments 3 and 4, (e.g. flange removal, temporary pipe hookup, etc.).

_____ / _____
Initials/Date

ATTACHMENT 3C
SPECIAL ILRT VALVE LINEUPS

SYSTEM: CONTAINMENT MONITORING
PEN. NO.: 306,315,332,356,376 **Drawing: FD-302-693 Sheet 1**

VALVE NO.	VALVE DESCRIPTION	VENT LINEUP	INITIAL/DATE	TEST LINEUP	INITIAL/DATE	RESTORED POSITION	TAG PULLED INITIAL/DATE	IND. VERF. INIT/DATE
WSV-1	PA H2 Sample Iso	UNLOCKED & OPEN		CLOSED		LOCKED CLOSED		
WSV-2	PA H2 Sample Iso	UNLOCKED & OPEN		CLOSED		LOCKED CLOSED		
WSV-3	Cont Monitor Iso	OPEN		CLOSED		OPEN		
WSV-4	Cont Monitor Iso	OPEN		CLOSED		OPEN		
WSV-111	Alt. Sample Iso	OPEN		OPEN		OPEN		
WSV-5	Cont Monitor Iso	OPEN		CLOSED		OPEN		
WSV-6	Cont Monitor Iso	OPEN		CLOSED		OPEN		
WSV-9	Port H2 Anal Sample Bypass	CLOSED		CLOSED		OPEN		
WSV-26 #	PA H2 Sample Iso	OPEN		CLOSED		CLOSED PWR/OFF		
WSV-27 #	PA H2 Sample Iso	OPEN		CLOSED		CLOSED PWR/OFF		
WSV-28 #	PA H2 Sample Iso	OPEN		CLOSED		CLOSED PWR/OFF		
WSV-29 #	PA H2 Sample Iso	OPEN		CLOSED		CLOSED PWR/OFF		
WSV-30 #	PA H2 Sample Iso	OPEN		CLOSED		CLOSED PWR/OFF		
WSV-31 #	PA H2 Sample Iso	OPEN		CLOSED		CLOSED PWR/OFF		
WSV-123	RM-A6 Inlet	CLOSED		CLOSED		OPEN		
WSV-122	RM-A6 Outlet	CLOSED		CLOSED		OPEN		
WSV-32 #	PA H2 Sample Iso	OPEN		CLOSED		CLOSED PWR/OFF		
WSV-33 #	PA H2 Sample Iso	OPEN		CLOSED		CLOSED PWR/OFF		
WSV-34 #	PA H2 Sample Iso	OPEN		CLOSED		CLOSED PWR/OFF		
WSV-35 #	PA H2 Sample Iso	OPEN		CLOSED		CLOSED PWR/OFF		
WSV-36	PA H2 Sample Iso	OPEN		OPEN		CLOSED		
WSV-37	PA H2 Sample Iso	CLOSED		CLOSED		CLOSED		
WSV-38 #	PA H2 Sample Iso	OPEN		CLOSED		CLOSED PWR/OFF		
WSV-39 #	PA H2 Sample Iso	OPEN		CLOSED		CLOSED PWR/OFF		
WSV-40 #	PA H2 Sample Iso	OPEN		CLOSED		CLOSED PWR/OFF		
WSV-41 #	PA H2 Sample Iso	OPEN		CLOSED		CLOSED PWR/OFF		
WSV-42 #	PA H2 Sample Iso	OPEN		CLOSED		CLOSED PWR/OFF		
WSV-43 #	PA H2 Sample Iso	OPEN		CLOSED		CLOSED PWR/OFF		
WSV-663	H2 Analyzer B Iso	CLOSED		CLOSED		OPEN		
WSV-664	H2 Analyzer A Iso	CLOSED		CLOSED		OPEN		
WSV-109	Aim Detector Iso	CLOSED		CLOSED		OPEN		

ATTACHMENT 3C
SPECIAL ILRT VALVE LINEUPS

SYSTEM: CONTAINMENT MONITORING
PEN. NO.: 306,315,332,356,376 **Drawing: FD-302-693 Sheet 1**

VALVE NO.	VALVE DESCRIPTION	VENT LINEUP	INITIAL/DATE	TEST LINEUP	INITIAL/DATE	RESTORED POSITION	TAG PULLED INITIAL/DATE	IND. VERF. INIT/DATE
	H2 Analyzer Cal Gas Bottles (4)	DISCONNECTED		DISCONNECTED		RECONNECT		
WSV-7	Port H2 Anal Sample Iso	OPEN & UNCAPPED~~*~~		OPEN & UNCAPPED~~*~~		CLOSED & CAPPED ~~(RECONNECT WS-1-CE AT WSV-7)~~		
WSV-21	Pen 332 Drain & Test	OPEN & UNCAPPED		OPEN & UNCAPPED		CLOSED & CAPPED		
WSV-44	Test Conn	OPEN & UNCAPPED		OPEN & UNCAPPED		CLOSED & CAPPED		
WSV-45	Test Conn	OPEN & UNCAPPED		OPEN & UNCAPPED		CLOSED & CAPPED		
WSV-46	Test Conn	OPEN & UNCAPPED		OPEN & UNCAPPED		CLOSED & CAPPED		
WSV-47	Test Conn	OPEN & UNCAPPED		OPEN & UNCAPPED		CLOSED & CAPPED		
WSV-48	Test Conn	OPEN & UNCAPPED		OPEN & UNCAPPED		CLOSED & CAPPED		
WSV-47	Test Conn FLEX HOSE~~?~~	DISCONNECTED		DISCONNECTED		DISCONNECTED~~INSTALLED~~		
WSV-48	Test Conn FLEX HOSE~~?~~	DISCONNECTED		DISCONNECTED		DISCONNECTED~~INSTALLED~~		

~~*Disconnect WS-1-CE at WSV-7~~

Cycle the following breakers for valve position verification. Restore per OP-700E.

DPDP-5A BKR 2 for WSV-29, 31, 35, 43
DPDP-8A BKR 14 for WSV-28, 30, 34, 42
DPDP-5B BKR 27 for WSV-27, 33, 39, 40
DPDP-8B BKR 21 for WSV-26, 32, 38, 41

ATTACHMENT 17
GAUGE INSTALLATION / REMOVAL SHEET

Test gauges are used in various locations to monitor pressure in spaces/voids as an early indication of leakage from containment, or to indicate leakage between boundaries. The ILRT Test Supervisor may direct installation of additional test gauges when troubleshooting potential leakage paths. Use this attachment to document installation and removal of these test gauges.

GAUGE Serial#	CAL DUE	RANGE	MONITORED AREA/ PURPOSE	GAUGE LOCATION	INSTALLED (Initials/ Date)	REMOVED (Initials/ Date)	CONC VERIF (Initials/ Date)
		0-60 psig	"PI-PS" Monitor space between Purge Supply Valves AHV-1C and AHV-1D	Purge Duct Outside RB , AHV-24			
		0-60 psig	"PI-PE" Monitor space between Purge Exhaust Valves AHV-1A and AHV-1B	Purge Duct Outside RB , AHV-25			
		0-60 psig	"PI-SGA" Main Steam Line	PX Conn. Vlv MSV-505			
		0-60 psig	"PI-SGB" Main Steam Line	PX Conn. Vlv MSV-509			
		0-60 psig	"PI-P" Between Personnel Lock RAX-1 Doors	Outer Door Pressurization Tap, RAV-5			
		0-60 psig	"PI-PHS" Personnel Hatch, RAX-1, Seal	PX Conn. Vlv SAV-75			
		0-60 psig	"PI-EHPS" Personnel Hatch, RAX-2, Personnel Seal	PX Conn. Vlv SAV-76			
		0-60 psig	"PI-EHS" Equipment Hatch, RAX-2, Seal	PX Conn. Vlv SAV-77			
		0-60 psig	"PI-E" Between Equipment Lock RAX-2 Doors	Outer Door Pressurization Tap, RAV-76			
		0-60 psig	Reactor Building Pressure	Leak Rate Test Panel, LRV-41			
		0-100 psig	RB Sump Isolation Valves	WDV-810 Test Connection			

IF Pressure Gages are directed to be installed to troubleshoot leakage, THEN the following guidance should be used for installation AND removal.

(1) A different gauge range may be used at the discretion of the Test Supervisor.

To Install
1. Close root stop OR gauge isolation.
2. Remove any installed instrumentation.
3. Install gauge as directed by Test Supervisor

To Remove
1. Close root stop OR gauge isolation.
2. Remove any installed instrumentation.
3. Install instrumentation removed during installation

*PI-E, Between Equipment Lock RAX-2 Doors
1. Close RAV-76 (Test Connection). _____
2. Connect tubing downstream of RAV-76 _____
3. Install test gauge downstream of RAV-76 _____
4. Open RAV-76 (Test Connection). _____

PI-EHS, Equipment Hatch RAX-3 Seal
1. Close SAV-77 (Test Connection). _____
2. Connect tubing downstream of SAV-77 _____
3. Install test gauge downstream of SAV-77 _____
4. Open SAV-77 (Test Connection). _____

*These gauges are to be installed ONLY if associated Outer Door needs to be closed and the airlock pressurized.

RB Sump Discharge Line
1. Close WDV-810 (Test Connection) _____
2. Remove cap at WDV-810 _____
3. Install test gauge at WDV-810 _____
4. Open WDV-810 (Test Connection) _____

INIT

PI-EHPS, Personnel Hatch RAX-2 Seal
1. Close SAV-76 (Test Connection). _____
2. Connect tubing downstream of SAV-76 _____
3. Install test gauge downstream of SAV-76 _____
4. Open SAV-76 (Test Connection). _____

PI-PHS, Personnel Hatch RAX-1 Seal
1. Close SAV-75 (Test Connection). _____
2. Connect tubing downstream of SAV-75 _____
3. Install test gauge downstream of SAV-75 _____
4. Open SAV-75 (Test Connection). _____

Reactor Building Pressure
1. Close LRV-41 (Test Connection). _____
2. Connect tubing downstream of LRV-41 _____
3. Install test gauge downstream of LRV-41 _____
4. Open LRV-41 (Test Connection). _____

PI-E, Between Equipment Lock RAX-2 Doors
1. Close RAV-76 (Test Connection). _____(V)
2. Disconnect tubing downstream of RAV-76 _____
3. Remove test gauge downstream of RAV-76 _____
4. Replace cap downstream of RAV-76 (Test Connection). _____(V)

PI-EHS, Equipment Hatch RAX-2 Seal
1. Close SAV-77 (Test Connection). _____(V)
2. Disconnect tubing downstream of SAV-77 _____
3. Remove test gauge downstream of SAV-77 _____
4. Replace cap downstream of SAV-77 (Test Connection). _____(V)

RB Sump Discharge Line
1. Close WDV-810 (Test Connection) _____(V)
2. Remove test gauge at WDV-810 _____
3. Replace cap downstream of WDV-810 (Test Connection) _____(V)
INIT

PI-EHPS, Personnel Hatch RAX-2 Seal
1. Close SAV-76 (Test Connection). _____(V)
2. Disconnect tubing downstream of SAV-76 _____
3. Remove test gauge downstream of SAV-76 _____
4. Replace cap downstream of SAV-76 (Test Connection). _____(V)

PI-PHS, Personnel Hatch RAX-1 Seal
1. Close SAV-75 (Test Connection). _____(V)
2. Disconnect tubing downstream of SAV-75 _____
3. Remove test gauge downstream of SAV-75 _____
4. Replace cap downstream of SAV-75 (Test Connection). _____(V)

Reactor Building Pressure
1. Close LRV-41 (Test Connection). _____(V)
2. Disconnect tubing downstream of LRV-41 _____
3. Install test gauge downstream of LRV-41 _____
4. Replace cap downstream of LRV-41 (Test Connection). _____(V)

ATTACHMENT 6
Sheet 1 of 1
TEMPORARY CHANGE FORM

FORM PRO-NGGC-0204-6-7

Description			
Procedure No. SP-178	Revision No 29	Minor Change No A	Temp Chg Expires on (Date) 12/21/05
Procedure Title: Containment Leakage Test - Type "A"			NCR No. N/A
Impacted Site: ☐ BNP ☒ CR3 ☐ HNP ☐ NCP ☐ RNP			
Type of Action (Check Applicable Box): ☒ Temp Change Permanent to Follow ☐ Temp Change No Permanent to Follow		Affected Page Nos. 55, 136-140	
Description of Procedure Action: Page 55, corrected test valve number (Pen217-TVS in lieu of Pen217-TV1) Pages 136-140, changed steps to flush test piping/hose.			
Basis for the Procedure Action: Page 55, Incorrect tag number was referenced. Pages 136-140, Flush will no longer include Intermediate Bldg piping/hose.			
Originator (Print Name) Tim Howard			Date 11/21/05
Job Supervisor (Print Name) G.E. ENGLERT			Date 11/21/05
Interim Approval			
1st Approver (Print) Mary B. Warren	1st Approver (Sign) Mary B. Warren		Date 11/21/5
2nd Approver (SSO) (Print) Charles J. Morris	2nd Approver (SSO) (Sign)		Date 11/21/5
Tech and REG-NGGC-0010 Reviews			
Technical Reviewer (Print)	Technical Reviewer (Sign)		Date Completed
REG-NGGC-0010 (Check Applicable Box): ☐ Exempt ☐ Screening ☐ Evaluation			Reg AR No. / Date Completed
Final Approval [BNP, HNP]			
Final Approval Required by (Date)	☐ Approved		☐ Rejected
Final Approval (Print)	Final Approval (Sign)		Date
PNSC Chairman (Print) (if applicable)	PNSC Chairman (Sign)		Date
Removal/Early Expiration [ALL]			
Early Expiration Date	Approval (Sign)		Date

QA RECORD

Progress Energy

C
Continuous
Use

PROGRESS ENERGY

CRYSTAL RIVER UNIT 3

PLANT OPERATING MANUAL

SP-178

CONTAINMENT LEAKAGE TEST-TYPE "A" INCLUDING LINER PLATE

6.1.2.1.4 COMPLETE GRWRP

1. __ COMPLETE Permit Completion section.
2. __ ATTACH Enclosure 9 of OP-417, RB Purge Channel Check Log, to GRWRP
3. __ RETURN original Permit to Chemistry Department
4. __ DE-ENERGIZE RM-A1 using Enclosure 7 of OP-417, Startup/Shutdown of RM-A1

_____/_____
Initials/Date

6.1.2.2 **Pen-216 (8")**

- ___REMOVE PEN216-TV1 (penetration isolation valve)
- ___REMOVE test flange
- ___ENSURE permanent flange is reinstalled

_____/_____
Initials/Date

6.1.2.3 **Pen-217 (8")**

- ___REMOVE PEN217-TV5 (penetration isolation valve)
- ___REMOVE test flange
- ___ENSURE permanent flange is reinstalled

_____/_____
Initials/Date

6.1.2.4 **Pen-122 (3")**

- ___ENSURE reinstallation of blind flange downstream of LRV-99
- ___CLOSE LRV-87
- ___CLOSE LRV-88

_____/_____
Initials/Date

ATTACHMENT 4
CONTAINMENT BUILDING PRESSURIZATION/DEPRESSURIZATION SYSTEM
INSTALLATION AND CHECKOUT

4.0 PRESSURIZATION SYSTEM CHECKOUT/LINE FLUSH

4.1 TEST EQUIPMENT

4.1.1 Fine mesh cloth for cleanliness check may be used during flushing.

4.2 PROCEDURE

Initials

4.2.1 Pressurization System Setup

4.2.1.1 Rented portions of Pressurization System are connected to each other per ILRT Test Supervisor's directions to the manifolds. _____

4.2.1.2 Have Maintenance Department remove blind flanges outside Reactor Containment at penetrations 216 and 217. _____

4.2.1.3 Have Maintenance Department install 12" to 8" reducing elbow and penetration isolation valve (PEN216-TV1 and PEN217-TV5) on both penetrations 216 and 217. Ensure penetration isolation valves PEN216-TV1 and PEN217-TV5 are closed. _____

4.2.1.4 Have Maintenance Department install test flanges on the containment side of Penetrations 216 and 217. _____

4.2.1.5 Perform (information only) LLRT of PEN216-TV1 and PEN217-TV5. Perform LLRT of PEN216-TV2 and PEN217-TV6, if directed by ILRT Test Supervisor. _____

4.2.1.6 Have Maintenance Department remove test flanges on the containment side of Penetrations 216 and 217. _____

CAUTION
Prior to pressurizing supply lines, remove all personnel from area with signs posted and area roped off.

4.2.2 Perform the following steps to verify pressurization line integrity.

4.2.2.1 Install loop back hose inside the Turbine building between Penetration 216 8" supply line and Penetration 217 8" supply line. _____

4.2.2.2 Align pressurization system, per Table 1 Step 4.2.2.2, for test of Penetration 216 air supply line. _____

4.2.2.3 Start one diesel air compressor connected to penetration 216 and slowly increase pressure in test line via valve manifold to 100 psig. _____

4.2.2.4 Hold pressure for ten (10) minutes (or as required to complete walkdown/leak checks). Inspect each connection for gross leakage. Repair any gross leakage. Small leakage is acceptable. _____

4.2.2.5 Ensure personnel are clear of exhaust muffler and slowly open PEN217-TV8. _____

4.2.2.6 Start remaining air compressors on Penetration 216 header one at a time until all compressors are running. Monitor exhaust muffler and piping continuously for vibration or excessive movement. _____

4.2.2.7 Open air sampling valve on Penetration 216 piping and notify Chemistry to perform an air sample. Also notify HP to perform a noise evaluation of the area. After Air sample is complete, close air sample valve. _____

4.2.2.8 Secure all compressors for Penetration 216 after flush is complete. _____

4.2.2.9 Align pressurization system, per Table 1 Step 4.2.2.9, for test of Penetration 217 air supply line. _____

4.2.3 Start one diesel air compressor connected to penetration 217 and slowly increase pressure in test line via valve manifold to 100 psig. _____

4.2.3.1 Hold pressure for ten (10) minutes (or as required to complete walkdown/leak checks). Inspect each connection for gross leakage. Repair any gross leakage. Small leakage is acceptable. _____

4.2.3.2 Ensure personnel are clear of exhaust muffler and slowly open PEN216-TV4. _____

4.2.3.3 Start remaining air compressors on Penetration 217 header one at a time until all compressors are running. Monitor exhaust muffler and piping continuously for vibration or excessive movement. _____

4.2.3.4 Open air sampling valve on Penetration 217 piping and notify Chemistry to perform an air sample. Also notify HP to perform a noise evaluation of the area. After air sample is complete, close air sample valve. _____

4.2.3.5 Secure all compressors for Penetration 217. _____

4.2.4 Remove loop back hose installed in Step 4.2.2.1 _____

4.2.5 Install remaining piping/hose for both Penetrations 216 and 217. _____

4.2.6 Place pressurization system in Pressurization System Standby lineup described in Table 1 of this attachment. _____

4.2.7 Top off compressors with fuel as necessary to be prepared for the ILRT. _____

5.0 PRESSURIZATION SYSTEM OPERATION

5.1 During ILRT rented portions of pressurization system will be operated by vendor-supplied personnel. These personnel will take direction from the ILRT Test Supervisor or his designee. _____

5.2 Permanent plant valves and components will be manipulated by plant operating or test unit personnel as directed by the ILRT Test Supervisor. _____

5.3 WHEN directed by ILRT Test Supervisor, THEN lineup pressurization system to pressurize containment per "Pressurize Containment" line of Table 1. _____

5.4 During Pressurization, SECURE compressors/pressurization system as directed by the ILRT Test Supervisor. _____

5.5 Top off air compressors fuel tanks before return to vendor, if directed by ILRT Test Supervisor-(compressors are to be returned with the same fuel level as received or there will be an additional refueling charge). _____

5.6 When Pressurization is complete, the pressurization header will be isolated at the 8" isolation valves, PEN216-TV1, PEN216-TV2 (if directed by ILRT Test Supervisor), PEN217-TV5, and PEN217-TV6 (if directed by ILRT Test Supervisor). Once isolated, vent the pressurization headers through spare bib connections on the Pressurization System manifolds. _____

5.7 When directed by the ILRT Test Supervisor, disconnect the temporary piping from the "compressor-side" of the compressor 8" isolation valves (PEN216-TV3 and PEN217-TV7). _____

6.0 PRESSURIZATION SYSTEM RESTORATION

6.1 WHEN directed by ILRT Test Supervisor, THEN various components of pressurization system may be disconnected from each other, and from pressurization system manifold (e.g., dryers, compressors, aftercoolers, chiller, etc,. as applicable). _____

6.2 Pressurization system manifold may NOT be removed until directed by ILRT Test Supervisor. _____

6.3 Rented portions of pressurization system will be disconnected, prepared for shipment and moved to a staging area outside Protected Area for pickup by vendor's freight carrier. _____

6.4 Temporary piping from Penetrations 216 and 217 to valves PEN216-TV1, PEN216-TV2, PEN217-TV5, PEN217-TV6 may be disassembled when the containment has been completely depressurized. _____

TABLE 1

PRESSURIZATION SYSTEM ALIGNMENT	Pressurization System Components - Compressors	Air Supply to Manifold Bull Hoses	Pressurization System Supply Manifold Hose Bib-Isolation Valves	Desiccant Dryers	Compressor Outlet Valves	8" Temporary Valve from Pen. 216, PEN216-TV1	8" Temporary Valve from Pen. 216, PEN216-TV2	8" Temporary Valve from Pen. 216, PEN216-TV3	8" Temporary Valve from Pen. 216, PEN216-TV4	8" Temporary Valve from Pen. 217, PEN217-TV5	8" Temporary Valve from Pen. 217, PEN217-TV6	8" Temporary Valve from Pen. 216, PEN217-TV7	8" Temporary Valve from Pen. 216, PEN217-TV8
Attach. 4, Step 4.2.2.2 Pressurization System Flush 216	OFF**	Instl'd	O	ON	O*	C	-	O	C	C	-	C	C*
Attach. 4, Step 4.2.2.9 Pressurization System Flush 217	OFF**	Instl'd	O	ON	O*	C	-	C	C*	C	-	O	C
Attach. 4, Step 4.2.6 Press. System Standby	OFF	Instl'd	C	OFF	C	C	C	C	C	C	C	C	C
Procedure Step 5.3 Pressurize Containment	ON**	Instl'd	O	ON	O*	O*	O*	O*	C	O*	O*	O*	C
Containment at Pressure	OFF	Instl'd	C	OFF	C	C	C	C	C	C	C	C	C
During ILRT	OFF	Instl'd	C	OFF	C	C	C	C	C	C	C	C	C
During Verification Test	OFF	Instl'd	C	OFF	C	C	C	C	C	C	C	C	C
During Depressurization	Rmv'd	Rmv'd	C	OFF	C	Open	Thrtl Open	C	O	Open	Thrtl Open	C	O

*Opened and closed as directed by the ILRT Test Supervisor
**Started and Stopped as directed by the ILRT Test Supervisor

Progress Energy

C
Continuous
Use

PROGRESS ENERGY

CRYSTAL RIVER UNIT 3

PLANT OPERATING MANUAL

SP-178

CONTAINMENT LEAKAGE TEST-TYPE "A" INCLUDING LINER PLATE

BF 11/14

3.3.10 Recommended Personnel

The following list of recommended personnel is provided to aid the test performers in preparation and is only a guideline:

Personnel Listing (Per Shift)	Number
Test Supervisor	1
Test Engineer	1
Operations Lead	1
Consulting Engineer	1
Computer Technician	1
Equipment Technician (pressurization only)	1
Leak Hunt Team	8

3.4 **Prerequisites**

3.4.1 Test Equipment required for test is addressed in:

3.4.1.1 Attachment 4, Containment Building Pressurization/Depressurization System Installation and Checkout

3.4.1.2 Attachment 5, ILRT Measurement System Installation and Checkout

3.4.1.3 Attachment 17, Gauge Installation/Removal Sheet

NOTE

The following tasks should be performed in support of ILRT after entering Mode 5 from power operation (sequence non-critical) unless specifically approved by the Shift Outage Director.

PRELIMINARY STEPS

3.4.2 Obtain Work Controls authorization to begin test preparation activities.

William F Kerner / 11/17/5

Work Controls Signature/Date

3.4.3 An organization chart describing Testing Organization, including names, phone numbers and email addresses of personnel supporting preparation, implementation, and restoration activities has been developed and communicated to project team supporting ILRT.

BJJ / 12/02/05

Initials/Date

3.4.4 A "Test Desk" has been designated for control of testing activities during implementation of Section 4.0, activities and phone numbers for the center have been communicated to the SSO, Outage Management, and Work Controls.

ACMC / 11-30-05
Initials/Date

3.4.5 As part of ILRT, Test Supervisor(s) SHALL maintain an active log with CR3 Autolog and/or per Attachment 1 (Test Supervisor's Log). The Log SHALL be initiated upon commencement of performance of this procedure. The Log SHALL be used to document those activities NOT documented on existing data sheets/ attachments and should include shift turnovers, ILRT instrumentation/ computer failures, compressor failures, fuel oil orders and deliveries, recommendations for procedure enhancements, and any significant events.

BJT / 11/30/05
Initials/Date

3.4.6 Rented portions of ILRT Pressurization System have been received and installed per Attachment 4 (Containment Building Pressurization / Depressurization System Installation and Checkout) at Test Supervisor's direction.

DW / 11/30/05
Initials/Date

INSTRUMENTATION & CONTROLS PREREQUISITES

3.4.7 Plant instrumentation required for conduct of ILRT (e.g. tank/sump level instrumentation) listed in Attachment 14 (Control Room Log) is calibrated per calibration program and is available for ILRT.

- BJT Pressurizer level (RC-001-LIR1) SP-170, 11/07/05
- BJT Pressurizer level (RC-001-LIR3) SP-170, 11/07/05
- BJT Reactor Building Sump level (WD-222-LI) SP-175, 11/16/05
- BJT Reactor Building Sump level (WD-302-LI) SP-175, 11/16/05
- BJT OTSG A level (SP-1A-LI1) ~~SP-~~ PM-300, 10/03/05
- BJT OTSG B level (SP-1B-LI1) PM-300, 10/03/05
- BJT RCDT level (WD-23-LI1) SP-169M, 11/15/05
- BJT Core Flood Tank A level (CF-2-LI1) SP-169A, 11/01/05
- BJT Core Flood Tank B level (CF-2-LI3) SP-169A, 11/01/05

BJT 12/02/05
Initials/Date

3.4.8 Prepare RB instrumentation and equipment for Integrated Containment Leak Rate Test by completing items listed on RB Preparation Checklist, Attachment 2, (Containment Preparation Checklist).

BJJ / 12/02/05
Initials/Date

3.4.9 Termination of ILRT sensor instrument strings inside containment have been completed per Attachment 5, (ILRT Measurement System Installation and Checkout). Circuit terminations have been "rung out" or otherwise verified to be correct.

(11B) BJJ
Initials/Date

3.4.10 Modify LR system tubing to allow adequate flow for the verification test by removing LRV-63 and LRV-69 and installing a tubing jumper.

(11B) BJJ
Initials/Date

3.4.11 Secure Radiation Monitors RM-G16, RM-G17 and RM-G18 and associated Radiation Monitoring System) and remove G-M tubes per Attachment 2.

RM / 12/2/05
Initials/Date

3.4.12 DISCONNECT ~~and REMOVE~~ H2 Analyzer Calibration (Span) Gas bottles (4)

BJJ / 12/2/05
Initials/Date

3.4.13 Installation of temporary calibrated pressure gauges is complete per Attachment 17.

BJJ / 12/03/05
Initials/Date

MECHANICAL PREREQUISITES

3.4.14 The following Temporary Alterations have been performed in accordance with Attachments listed:

Maintenance support of penetration preparations described in Attachments 3 and 4, (e.g. flange removal, temporary pipe hookup, etc.).

BJJ / 12/03/05
Initials/Date

(11B) Documented on SP-178, Rev 29, Pg. 11 RJ Forbes

3.4.8 Prepare RB instrumentation and equipment for Integrated Containment Leak Rate Test by completing items listed on RB Preparation Checklist, Attachment 2, (Containment Preparation Checklist).

(11) /
Initials/Date

3.4.9 Termination of ILRT sensor instrument strings inside containment have been completed per Attachment 5, (ILRT Measurement System Installation and Checkout). Circuit terminations have been "rung out" or otherwise verified to be correct.

RWC 11-30-05
Initials/Date

3.4.10 Modify LR system tubing to allow adequate flow for the verification test by removing LRV-63 and LRV-69 and installing a tubing jumper.

RWC / 11-30-05
Initials/Date

3.4.11 Secure Radiation Monitors RM-G16, RM-G17 and RM-G18 and associated Radiation Monitoring System) and remove G-M tubes per Attachment 2.

(11) /
Initials/Date

3.4.12 DISCONNECT and REMOVE H2 Analyzer Calibration (Span) Gas bottles (4)

(11) /
Initials/Date

3.4.13 Installation of temporary calibrated pressure gauges is complete per Attachment 17.

(11) /
Initials/Date

MECHANICAL PREREQUISITES

3.4.14 The following Temporary Alterations have been performed in accordance with Attachments listed:

Maintenance support of penetration preparations described in Attachments 3 and 4, (e.g. flange removal, temporary pipe hookup, etc.).

(11) /
Initials/Date

(11) Documented on SP-178, Rev 29B, Pg. 11. Ry Forster

3.4.15 Temporary pressurization header has been installed and rented pressurization equipment attached per Work Order instructions and Attachment 4 of this procedure.

BJJ / 12/03/05
Initials/Date

3.4.16 Plant mechanical equipment protection activities inside containment per Attachment 2, (Containment Preparation Checklist) are complete.

BJJ / 12/03/05
Initials/Date

ELECTRICAL PREREQUISITES

3.4.17 Plant electrical equipment protection activities inside the containment per Attachment 2 are complete.

BJJ / 12/03/05
Initials/Date

3.4.18 Temporary power and lighting requirements at temporary portions of Pressurization System per Attachment 4 are met.

DW / 11/30/05
Initials/Date

TEST SUPERVISOR PREPARATIONS

3.4.19 Verify all permits required for Test Desk and Pressurization Laydown areas have been obtained and posted.

BJJ / 12/02/05
Initials/Date

3.4.20 Temporary communications have been provided as determined by Test Supervisor. Record numbers on Attachment 1, (Test Supervisor's Log).

BJJ / 12/03/05
Initials/Date

3.4.21 Tables, chairs, portable ventilation equipment, uninterruptible power supplies have been provided as determined by Test Supervisor.

AWP / 11-30-05
Initials/Date

3.4.22 Provide a listing of materials/equipment that should NOT be brought into or left in RB to Containment Coordinator and Shift Outage Director.

TMH / 12/01/05
Initials/Date

3.4.23 VERIFY that all required Environmental Permits/Notifications associated with running the rented diesel-driven air compressors have been dispositioned.

DW / 11/30/05
Initials/Date

3.4.24 VERIFY installation and checkout portions of Attachment 4, (Containment Building Pressurization/Depressurization System Installation and Checkout) are complete and satisfactory.

BJZ / 12/3/05
Initials/Date

3.4.25 VERIFY that installation and calibration of instrumentation for ILRT is completed and properly documented in Attachment 5, (ILRT Measurement System Installation and Checkout).

BJZ / 12/02/05
Initials/Date

3.4.26 VERIFY "as-installed" certification of ILRT Data Management computer program is completed. Include certification package in Attachment 16, (Computer Printouts and Attachments).

BJZ / 12/02/05
Initials/Date

3.4.27 A general inspection of accessible interior and exterior surfaces of containment structures and components has been performed. Any irregularities such as cracking, peeling, delamination, corrosion, and structural deterioration SHALL be recorded and evaluated or repaired as required, prior to conduct of ILRT. Document results in Attachment 10, Containment Building Visual Inspection.

BJZ / 12/02/05
Initials/Date

3.4.28 Establish controls (signs) limiting access to periphery of containment during test at RCA Access Points. Access should be limited to personnel authorized by Test Supervisor or Work Controls.

BJZ / 12/03/05
Initials/Date

3.4.29 Collect available local leak rate test results completed prior to ILRT. Record as-found and as-left results in Attachment 9, Containment Penetration Summary for calculations.

BJ / 12/03/05
Initials/Date

ILRT CONSULTANT PREREQUISITES

3.4.30 The test preparation portions of Attachment 5, ILRT Measurement System Installation and Checkout are complete:

BJ / 12/03/05
Initials/Date

3.4.31 The installed ILRT Measurement System meets performance and quality specifications of Attachment 5, Section 1.0.

RMC / 11-30-05
Initials/Date

3.4.32 Calibration and pre-test check information has been entered into Attachment 5, Section 4.0, reviewed and found acceptable. Copies of sensor calibration sheets have been included in Attachment 16, Computer Printouts and Attachments.

RMC / 11-30-05
Initials/Date

3.4.33 ILRT Measurement System cabling has been terminated per Section 5.0 of Attachment 5. Documentation of cable lead landings may be on form in Section 5.0 or using standard plant form such as Enclosure 1 of CP-113A, Maintenance Work Performance. If WO related form is used, attach copy to Attachment 16 of this procedure.

RMC / 11-30-05
Initials/Date

3.4.34 ILRT Measurement System dry-bulb and RH sensors have been placed in containment per Section 6.0 of Attachment 5.

RMC. / 12-3-05
Initials/Date

3.4.35 ILRT Measurement System outside containment has been installed and functionally checked per Attachments 5 and 6.

RMC / 11-30-05
Initials/Date

3.4.36 ILRT software program has been installed and "As-installed" Certification Package is complete. Attach certification package to Attachment 16.

RWC / 11-30-05
Initials/Date

3.4.37 Beginning at least 24 hours prior to scheduled start of pressurization, perform a tour of containment once a shift to verify containment readiness for testing. Walk-down should catalog remaining items to be removed from containment, or items that must be protected from test pressure. Provide a list of discrepancies to Shift Outage Director and Containment Coordinator.

BJJ / 12/03/05
Initials/Date

3.4.38 Provide a set of marked-up Flow Diagrams (FD-302) to Work Controls organization illustrating test valve lineups/boundaries. Review drawings with affected coordinators.

RWC / 11-30-05
Initials/Date

3.4.39 Review of all work orders, clearances, and temporary alterations outstanding or planned for release during ILRT window (plus 24 hours) has been completed. Review should identify existing and/or potential infringement on test boundaries, equipment operations/losses that could impact plant conditions/stability during ILRT, and ensure Work Control provisions/communication channels are adequate.

BJJ / 12/03/05
Initials/Date

3.4.40 Verify that compressors and associated air handling equipment are setup per Attachment 4, Containment Building Pressurization/Depressurization System Installation and Checkout.

BJJ / 12/03/05
Initials/Date

OPERATIONS PREREQUISITES

3.4.41 Setup a Trend Report on plant computer to monitor levels in MCR Log per Attachment 14, Control Room Log every 15 minutes during test. Set plant computer to collect data on 15 minute intervals, and print reports on the hour.

BJJ / 12/03/05
Initials/Date

3.4.42 Verify pressurizer level between 100 to 140 inches prior to performing ILRT to compensate for level changes during pressurization. Pressurizer level must be within indicating range during ILRT.

BJJ / 12/03/05
Initials/Date

3.4.43 Verify RCDT (WDT-5) is pumped below < 95inches. Use OP-407J, Operations of the Reactor Coolant Drain Tank as necessary.

BJJ / 12/03/05
Initials/Date

3.4.44 Plant stability is critical during the ILRT. Avoid any activity that changes containment volume during Stabilization, Hold Test and Verification Test phases.

BJJ / 12/03/05
Initials/Date

NOTE

For the purpose of the ILRT, Steam Generator levels are acceptable anywhere from the normal range to the 400" mark specified below.

3.4.45 The Steam Generator's (RCSG 1A / 1B) secondary side may be placed in the following ILRT Layup condition:

3.4.45.1 Steam Generators drained to just below the Main Steam lines (approximately 400" on the full range instrument).

BJJ / 12/03/05
Initials/Date

3.4.45.2 Main Steam Lines A1, A2, B1, and B2 drained.

BJJ / 12/03/05
Initials/Date

3.4.46 Reactor coolant temperature is being controlled via Decay Heat to within ± 2°F of any temperature selected by the Control Room Supervisor when pressurization starts.

BJJ / 12/03/05
Initials/Date

3.4.47 Perform the following system alignments as soon as practical prior to their related phases:

3.4.47.1 Attachment 3A, ILRT Valve Lineup Prior to Pressurization.

BJJ / 12/03/05
Initials/Date

3.4.47.2 Attachment 3B, ILRT Valve Lineup Prior to Stabilization (NOT required prior to starting compressors).

BJJ / 12/3/~~4~~05
Initials/Date

3.4.47.3 Attachment 3C, ILRT Special Valve Lineups. Completion REQUIRED before starting compressors.

BJJ / 12/3/05
Initials/Date

3.4.47.4 Attachment 3D, Supplementary ILRT Valve Lineups.

BJJ / 12/3/05
Initials/Date

3.4.47.5 Attachment 3E, Breaker List.

BJJ / 12/3/05
Initials/Date

3.4.48 Secure Reactor Building Cooling Units per OP-417.

BJJ / 12/03/05
Initials/Date

3.4.49 Record Decay Heat Removal Loop in operation: B

BJJ / 12/03/05
Initials/Date

FINAL PREPARATIONS

3.4.50 Inspect Personnel and Equipment Hatch air lock doors. Door seals and mating surfaces SHALL be clean and in acceptable condition. Close inner doors of personnel and equipment air locks. Outer doors will remain open to prevent excessive equalization time if there is a small leak into air lock.

BJJ / 12/03/05
Initials/Date

3.4.51 HPI is tagged out and the system has been bypassed to prevent actuation from an inadvertent RBIC signal during containment pressurization.

BJJ / 12/03/05
Initials/Date

NOTE

AI-504, Shutdown Guidelines requires one Reactor Building Cooling Unit to be available in Shutdown Condition 4. Due to the higher density of compressed air during ILRT conditions, the cooling unit is required to be temporarily modified with flow baffles and 129 Amp overloads for it to be considered available.. Reference ED 62366.

3.4.52 Ensure one Reactor Building Cooling Unit has been temporarily modified per Attachment 2 such that it remains available per AI-504, Shutdown Guidelines. Indicate below which unit has been modified and NOTIFY the SSO which cooling unit is considered available.

AHF-1A (ES-MCC-3A2, Unit 1B) X [ ] N/A

AHF-1B (ES-MCC-3B3-Unit 6AN) ____ [X] N/A

AHF-1C (ES-MCC-3AB, Unit 1B) ____ [X] N/A

SSO Notified X

BJJ, 12/03/05
Initials/Date

3.4.53 All electrical equipment should be de-energized within containment, except for those services required. Refer to Attachment 3E.

BJJ, 12/03/05
Initials/Date

3.4.54 VERIFY that a review of on-going work and clearances on or around RB with Outage Work Control organization has been completed by the Test Supervisor AND ILRT Consultant, and any potential interferences with the test or breaches of testing lineups have been resolved.

BJJ, 12/03/05
Initials/Date

3.4.55 REVIEW Attachment 8, Valve Lineup Alteration Log. Verify any lineup alterations have been satisfactorily resolved.

BJJ, 12/03/05
Initials/Date

3.4.56 REVIEW Attachment 9, Containment Penetration Summary to verify actual penetration status entering ILRT is accurately reflected.

BJJ, 12/03/05
Initials/Date

3.4.57 Conduct a phase-specific briefing for Control Room personnel prior to commencement of Pressurization Phase.

BJJ 12/03/05
Initials/Date

3.4.58 A final closeout inspection has been made by ILRT Test Supervisor or Designee to ensure:

3.4.58.1 All containment temporary equipment that contains supplies of compressed gases has been removed or vented.

RWC 12-3-05
Initials/Date

3.4.58.2 NO significant fire hazards have been identified in containment.

RWC 12-3-05
Initials/Date

3.4.58.3 Any water standing on Containment Building floors or low spots has been removed and areas left dry if practical.

RWC 12-3-05
Initials/Date

3.4.59 The RB sump has been pumped down to its minimum level within the indicating range of WD-222-LI.

BJJ 12/03/05
Initials/Date

3.4.60 Align Leak Rate Test System air compressor discharge header for Pressurization per Table 1 of Attachment 4. START compressors when notified by ILRT Test Supervisor.

BJJ 12/03/05
Initials/Date

3.4.61 Pressurization may begin prior to completion of valve alignments providing Test Supervisor has verified:

3.4.61.1 Component manipulations and/or visual verifications associated with components inside containment on Attachments 3A, 3C, 3D and 3E are complete.

BJJ 12/3/05
Initials/Date

3.4.61.2 Attachment 3C, (SYSTEM: NG, N2 to NUCLEAR EQUIPMENT) system piping venting is complete.

BJ / 12/3/5
Initials/Date

3.4.61.3 Attachment 3C, (SYSTEM: IA, INSTRUMENT AIR) depressurizing Instrument Air header is complete.

BJ / 12/3/5
Initials/Date

3.4.61.4 Containment portions of Attachment 2 are complete.

BJ / 12/3/5
Initials/Date

3.4.61.5 Installation of ILRT Measurement System inside RB is complete per Attachment 5.

[illegible] / 12-3-05
Initials/Date

3.4.61.6 Containment Inspection is complete in its entirety, or intent of containment inspection requirements as stated in Containment Leakage Rate Testing Program have been met.

BJ / 12/3/5
Initials/Date

3.4.61.7 Test Supervisor has reviewed Attachment 8, Valve Lineup Alteration Log to ensure that all components inside containment are in their Test Position, or have been satisfactorily dispositioned.

BJ / 12/03/05
Initials/Date

3.4.61.8 Review of all outstanding work orders, clearances and temporary alterations have been completed at least to the extent that Test Supervisor, Outage Management or Operations interface are satisfied that NO obstacles to closing out of containment/performing the test exist.

BJ / 12/03/05
Initials/Date

3.4.62 Final walkdown/closeout inspection of containment has been satisfactorily completed.

[illegible] / 12-3-05
Initials/Date

3.4.63 Notify Chemistry to take RB air sample e.g. RM-A6 prior to pressurization. This sample is to be used to prepare release permit for the verification (imposed) leak test and depressurizing containment after ILRT.

BJZ / 12/03/05
Initials/Date

3.4.64 Establish communications between ILRT Test Desk, Main Control Room, and air compressors.

RWC / 12-3-05
Initials/Date

3.4.65 Verify containment temporary power/lighting has been isolated.

BJZ / 12/03/05
Initials/Date

3.4.66 Verify all personnel are clear of the RB. Evacuate all personnel from RB by making the following announcement twice:

"ATTENTION ALL PERSONNEL IN THE REACTOR BUILDING ATTENTION ALL PERSONNEL IN THE REACTOR BUILDING, ILRT PREPARATIONS ARE COMPLETE. ALL PERSONNEL EXIT THE CONTAINMENT AT THIS TIME."

/ 12/3/5
Initials/Date

3.4.67 Prior to RB pressurization, have Operations Department sound the RB evacuation alarm, Health Physics review all sign-in sheets and Security review computer logs to verify reactor containment has been evacuated by all personnel. Have each department Initial/Date below:

	INITIALS / DATE
Operation Department Sound Evacuation Alarm	12/3/5
Health Physics Dept. Sign-in Sheet / Computer Logs Verification	BJZ 12/3/05
Security Review of Containment Access Computer Logs	BJZ 12/3/5

3.4.68 Close out the Containment Building as follows:

3.4.68.1 Equipment Hatch Resilient Seals

a. Verify RB Equipment Hatch is installed.

/ 12/3/5
Initials/Date

b. Verify RB Equipment Hatch seal test (SP-179B, Pen-222) following installation was acceptable.

RJJ / 12/3/5
Initials/Date

3.4.68.2 Equipment Hatch Air Lock.

a. Verify outer door OPEN

RJJ / 12/3/5
Initials/Date

b. Close and lock inner door of Airlock.

RJJ / 12/3/5
Initials/Date

3.4.68.3 Personnel Airlock.

a. Verify outer door OPEN.

RJJ / 12/3/5
Initials/Date

b. Close and lock inner door of Airlock.

RJJ / 12/3/5
Initials/Date

NOTE

Seal testing of airlock doors can occur as soon as the door is secured to traffic/locked (e.g., the Equipment Hatch Lock). Testing of the Personnel Hatch Door Seals can occur 12-18 hours earlier at the ILRT Supervisor's direction, and need not be repeated if the pre-closing inspection of the seals/seating surface shows no signs of damage. IF there is any reason to suspect the performance of the door seals, THEN perform the leak test.

3.4.69 SP-430, Containment Airlock Seal Leakage Test has been successfully performed for the inner door seal.

RJJ / 12/3/5
Initials/Date

3.5.18 Communications must be established between key ILRT locations prior to the start of pressurization, and shall be available between the ILRT Test Desk and the Control Room at all times during the test.

3.5.19 Preparation for ILRT may begin prior to the plant entering Mode 5. Containment integrity SHALL be maintained in Modes 1, 2, 3 and 4 in accordance with applicable portions of Technical Specification 3.6.

3.5.20 Do not leave any portion of the secondary system inside containment vented to the containment atmosphere.

3.5.21 Do NOT use any jumper leads without insulated connections.

3.5.22 The ILRT Test Supervisor SHALL verify prior to the test that there is NO significant fire hazard in containment.

3.5.23 Temperature limits for Reactor Containment atmosphere SHALL NOT be exceeded. Limits are ≥ 60°F and ≤ 130°F. ITS 3.6.5, FSAR.

3.5.24 Test Tags may be used on plant equipment. These tags are used to indicate that a component has been aligned to a certain configuration in support of ILRT.

3.5.25 Individual steps may be omitted or performed out of order at discretion of ILRT Test Supervisor, marked N/A, and explained in Attachment 7, Test Exception Log.

3.5.26 At the direction of the Operations Lead, valve alignment may be performed out of order. Any deviation SHALL be documented on Attachment 8.

3.5.27 CR3 Safety Representative will specify approved hearing protection in test areas (adjacent to the air compressors, air charging piping, pressurization lines, and depressurization lines) during pressurization AND depressurization operations.

3.5.28 NO data point is to be rejected on a purely statistical basis. Apparent outliers will be investigated for physical or measurement system problems. Individual sensor performance graphs and sensor deviation/failure criteria, provided by ILRT computer program, will be used to evaluate sensor performance and to provide basis for sensor deletion. Raw data for deleted sensors will continue to be recorded if possible, but NOT used, throughout the test.

3.5.29 Containment entry is permissible when containment is pressurized per OP-417, Containment Operating Procedure.

3.5.30 IF a containment entry is required prior to 12 psig,
THEN an EMT SHALL be available. NO personnel SHALL be allowed to enter containment above 12 psig without permission of the Plant General Manager.

IF entries at pressure are required,
THEN Safety SHALL be contacted to ensure compliance with requirements of OSHA regulations (29CFR1926.804, Subpart S, Appendix A).

4.0 **INSTRUCTIONS**

4.1 **Initial Conditions**

4.1.1 Plant is shutdown in Mode 5.

TLH / 12/02/05
Initials/Date

4.1.2 Perform an IPTE briefing in accordance with AI-550, Infrequently Performed Tests and Evolutions. IPTE briefing has been completed for each new shift.

Days / BJ Foat 11/30/05
Shift IPTE or Designee/Date

Nights / BJ Foat 11/30/05
Shift IPTE or Designee/Date

/
Shift IPTE or Designee/Date

/
Shift IPTE or Designee/Date

4.1.3 OBTAIN permission from SSO or Designee to perform test.

BJ Foat / 12/03/05
SSO/Designee / Date

4.1.4 The Test Supervisor has verified all Prerequisites and Precautions and Limitations have been reviewed and/or satisfactorily completed.

BJ Foat / 12/3/05
Test Supervisor / Date

4.2 **Pressurization of Reactor Containment**

4.2.1 Data Collection:

4.2.1.1 Record ambient pressure at the start of pressurization:

Ambient pressure = 14.77 psia

Gauge serial #: 6P-0172 Cal due date: ~~09/13/06~~ 03/13/06

cal'd 9/14/05

BJF / 12/3/5
Initials/Date

4.2.1.2 Record initial pressure on test gauges listed on Attachment 17 and Attachment 18. Record pressure readings from test gauges installed on plant equipment in Attachment 17 every thirty minutes until containment reaches 12 psig, at one hour intervals thereafter until end of pressurization, and stabilization, or as directed by Test Supervisor.

BJJ / 12/3/05
Initials/Date

4.2.1.3 Start recording containment atmospheric data at 15 minute intervals using the ILRT Measurement System.

BJJ / 12/3/5
Initials/Date

4.2.1.4 Verify Trend Report on plant computer setup to monitor levels in, Attachment 14 (Control Room Log) is running. Data should be recorded at 15 minute intervals, printed hourly.

BJJ / 12/3/05
Initials/Date

4.2.1.5 Record Initial Water Levels on Attachment 14, (Control Room Log).

BJJ / 12/3/05
Initials/Date

4.2.2 Announce the following 3 times over plant page.

"ATTENTION ALL PERSONNEL, ATTENTION ALL PERSONNEL, REACTOR BUILDING PRESSURIZATION IS ABOUT TO COMMENCE. ALL NON-ESSENTIAL PERSONNEL SHALL STAND CLEAR OF REACTOR BUILDING AREAS ASSOCIATED WITH THE INTEGRATED LEAK RATE TEST."

/ 12/3/5
Initials/Date

4.2.3 Initiate Pressurization by opening Penetration 216 and 217 test valves and start pressurization. Continue to pressurize until containment air pressure reaches 54.0 psig + 1.0, - 0 psig (the target pressure is 54.5). Maximum pressurization rate should NOT exceed 15 psi per hour.

4.2.3.1 **Pen-216 (8")**

- ✓ OPEN PEN216-TV3 (compressor isolation valve)
- ✓ CLOSE PEN216-TV4 (muffler isolation valve)
- ✓ OPEN PEN216-TV1 (penetration isolation valve)
- ✓ OPEN PEN216-TV2 (throttle valve) as necessary to maintain a maximum pressurization rate NOT to exceed 15 psi/hr

BJ / 12/3/5
Initials/Date

4.2.3.2 **Pen-217 (8")**

- ✓ OPEN PEN217-TV7 (compressor isolation valve)
- ✓ CLOSE PEN217-TV8 (muffler isolation valve)
- ✓ OPEN PEN217-TV5 (penetration isolation valve)
- ✓ OPEN PEN217-TV6 (throttle valve) as necessary to maintain a maximum pressurization rate not to exceed 15 psi/hr

BJ / 12/3/5
Initials/Date

NOTE
Test pressure SHALL NOT fall below 52.1 psig or exceed 55 psig at anytime during ILRT. Test pressure may fall below 52.1 psig during verification test.

4.2.3.3 Maintain moisture and oil content as low as possible when pressurizing Reactor Containment Building.

BJ / 12/3/05
Initials/Date

4.2.3.4 Containment inlet air temperature should be monitored during pressurization phase of test to ensure containment weighted average temperature is above 60°F and below 130°F.

BJ / 12/3/5
Initials/Date

NOTE

Report any apparent leakage to ILRT Test Supervisor. DO NOT isolate or adjust any leakage found during leak checks. Excessive leakage is to be dispositioned per Attachment 11.

4.2.3.5 Inspect containment boundary for leakage at containment pressures of approximately 20 psig and 40 psig.

TRA / 12/3/05
Initials/Date

4.2.4 Notify Chemistry that this is the final opportunity to obtain an air sample from containment prior to end of pressurization phase. This sample may be used to prepare a release permit for depressurizing containment after ILRT. Following pressurization, samples will not be allowed until depressurization phase of ILRT.

Pen. 116 - Opened Penetration Comp Log.

TRA / 12/3/05
Initials/Date

NOTE

Evolutions such as changing tank/sump and pressurizer levels can destabilize the containment atmosphere and put the ILRT schedule at risk. It is highly desirable to make any such adjustments prior to commencing data taking in the Stabilization Phase.

4.2.5 As the containment nears test pressure assess plant conditions, e.g. pressurizer and/or sump levels, pump sumps or make additions to the RCS as required prior to entering the stabilization phase.

AB / 12-3-05
Initials/Date

4.2.6 At equal to or greater than 40 psig, verify adequate flow can be obtained through each verification test flowmeter and check connections for leakage. IF required minimum flowrate cannot be obtained individually or in parallel, refer to Attachment 11, Contingencies, Section 7.0.

TRA / 12/3/05
Initials/Date

4.2.7 The ILRT Test Supervisor will direct compressor operator to isolate compressors in groups as pressure exceeds 45 psig. The number of compressors secured and isolated at a given time is at the discretion of the ILRT Test Supervisor.

TRA / 12/3/05
Initials/Date

NOTE

At 50 psig, alert Operations that an Operator will need to be stationed to CLOSE the ILRT test isolation valves as soon as test pressure is reached. The ILRT Test Supervisor may direct additional test valves to be repositioned.

4.2.8 WHEN desired pressure is achieved, THEN:

4.2.8.1 Isolate containment by closing the two (2) eight-inch isolation valves upstream of penetrations 216 and 217.

- ✓ CLOSE PEN216-TV1 (penetration isolation valve)
- ✓ CLOSE PEN217-TV5 (penetration isolation valve)

Sw 1 12.3.5
Initials/Date

4.2.8.2 Shutdown remaining compressors.

Sw 1 12.3.5
Initials/Date

4.2.8.3 Isolate compressors at compressor outlets and pressurization system manifold

Sw 1 12.3.5
Initials/Date

4.2.8.4 Open a vent on compressor manifold to vent pressurization lines.

Sw 1 12.3.5
Initials/Date

NOTE

At any time after it has been verified that NO leakage is present at the two 8" isolation valves at Penetrations 216 and 217, the ILRT Test Supervisor, with the concurrence of the ILRT Consultant, may direct partial disassembly of the Pressurization System outside the Protected Area fence.

4.2.8.5 After lines are depressurized, THEN check vent for evidence of leakage past the two (2) closed eight-inch isolation valves at penetrations 216 and 217.

TRH 1 12/3/05
Initials/Date

NOTE

ILRT Data Management computer program may be placed in Stabilization Mode while administrative review of remaining sections of this step is completed.

4.2.9 IF pressurization was begun prior to completion of all valve alignments, THEN verify the following:

4.2.9.1 Component manipulations/visual verifications associated with components outside containment in Attachment 3B, Lineup Prior to Stabilization are complete.

AB / 12-3-05
Initials/Date

4.2.9.2 ILRT Test Supervisor and ILRT Consultant has reviewed Attachment 8, (Valve Lineup Alteration Log) to ensure that all components listed are in their "TEST POSITION". Any unresolved component positions must be listed as Test Exceptions in Attachment 7, and the impact on penetration status listed in Attachment 9, (Containment Penetration Summary) must be assessed.

TRH / 12/03/05
Initials/Date

4.2.10 RECORD lowest reading ILRT pressure gauge on line 1 and outside atmospheric pressure on line 2 below. Subtract line 2 from line 1. Enter the result on line 3. Verify Line 3 value is greater than 52.1 psig.

(1) Lowest Reading ILRT Pressure Gauge 69.3112 psia

(2) Outside Atmospheric Pressure 14.76 psia

(1) 69.3112 - (2) 14.76 = (3) 54.55 psig

(3) Containment Gauge Pressure 54.55 psig

Line (3) value 54.55 > 52.10 psig

PSS / 12/3/05
Initials/Date

4.3 **Stabilization Phase**

4.3.1 Data Collection:

4.3.1.1 Record ambient pressure at the start of stabilization:

Ambient pressure 14.76 psia

Gauge serial #: TI-3599 Cal due date: 10-13-06

TRA / 12/03/05
Initials/Date

4.3.1.2 Record the Start of the Stabilization Phase:

Time (24 hr clock) 2315 Date 12 / 03 / 05

TRA / 12/3/05
Initials/Date

4.3.1.3 Record pressure readings from test gauges installed on plant equipment in Attachment 17 every hour until the end of stabilization, or as directed by Test Supervisor.

BJJ / 12/3/5
Initials/Date

4.3.1.4 Continue recording containment atmospheric data at 15 minute intervals using ILRT Measurement System.

BJJ / 12/3/5
Initials/Date

4.3.1.5 Verify Trend Report on plant computer setup to monitor levels in Attachment 14 is still running.

BJJ / 12/3/5
Initials/Date

4.3.2 Allow containment atmosphere to stabilize for a minimum of four hours after time recorded in step 4.3.1.2 THEN record time and date.

Time (24 hr clock) 0945 Date 12 / 03 / 05

BJJ / 12/3/5
Initials/Date

NOTE

Stabilization criteria for performing ILRTs under both the BN-TOP-1 and ANSI 56.8-1994 methodologies are included. Leakage stabilization criteria of ANSI 56.8-1994 is more difficult to meet. At least one method's criteria must be met in order to enter Hold Test Phase. Both criteria should be met before starting Type A Test in order to provide the most options during Hold Test Phase. Note that failing to meet a methodology's stabilization criteria may preclude its use as a means to perform ILRT.

4.3.3 During pressure stabilization period, check for leaks at RB Pressure Sensing Cabinets 3A1, 3A2, 3A3, 3A4, 3B1, 3B2, and 3B3

BJT / 12/3/5
Initials/Date

4.3.4 Prior to start of Type A Test, verify the following stabilization criteria for containment atmosphere are met. Stabilization occurs when:

4.3.4.1 BN-TOP-1

a. Rate of change of average temperature is less than 1.0°F/Hour averaged over the last two hours. (BN-TOP-1 requirement).

OR

b. Rate of change of temperature changes less than 0.5°F/Hour/Hour averaged over the last two hours. (BN-TOP-1 requirement).

c. BN-TOP-1 stabilization criteria met. Attach a screen-print from the Stabilization Phase screen of ILRT Data Management Program stating criteria has been met to Attachment 16, (Computer Printouts and Attachments).

BJT / 12/3/5
Initials/Date

34 see attached stabilization criteria. BJ Tuft. 12/3/5

NOTE

L1h = estimate of leakage rate, derived from least squares slope and intercept using mass data over the last hour (in % wt/day).

L2h = estimate of leakage rate, derived from least squares slope and intercept using mass data over the last two hours (in % wt/day).

4.3.4.2 ANSI/ANS 56.8-1994

a. Primary containment atmosphere is assumed to be stabilized for Type A test purposes when the following criteria are simultaneously met (ANSI 56.8-1994):

Criterion (1)
The absolute value of difference between L2h and L1h SHALL be less than or equal to 0.25La.

L1h = 0.0575

L2h = 0.0663

.0663 (L2h) - .0575 (L1h) = .0088 ≤ (0.0625% wt/day) ✓

Criterion (2)
L1h SHALL be greater than or equal to zero and SHALL be less than La.

NOTE

Per ANSI/ANS 56.8-1994, paragraph 5.6, If one or more leakage pathways require isolation, repair or adjustment in order to meet criterion (2), criterion (1) need NOT be re-verified provided this criterion was met prior to time of isolation, repair, or adjustment. The change in L1h should be demonstrated to be a direct result of this isolation, repair, or adjustment.

b. ANSI/ANS 56.8-1994 leakage stabilization criteria met. Attach a screen-print from Stabilization Phase screen of ILRT Data Management Program stating criteria has been met to Attachment 16, (Computer Printouts and Attachments).

[illegible] 12/3/15
Initials/Date

4.3.5 ILRT Test Supervisor SHALL judge if containment is stabilized and declare start of test based on a review of temperature vs. time, pressure vs. time graphs, available mass change and leakage data, as well as meeting criteria of 4.3.1 and 4.3.2 or 4.3.3. RECORD below the number of hours of stabilization, the time and date of the end of stabilization and the time and date of the start of the ILRT.

Stabilization Declared: 0945 / 12/3/5
Time / Date

No. of Hours for Stabilization: 10.5
Hours

Start of ILRT Hold Test Phase: 0945 / 12/3/5
Time / Date

BJT, 12/3/5
Initials/Date

4.4 **Hold Test Phase**

NOTE
Perform ILRT calculations in accordance with Section 4.4.4 for BN-TOP-1 test or Section 4.4.5 for an ANSI/ANS 56.8-1994 test.

4.4.1 Data Collection:

Record ambient pressure at the start of the Hold Test:

Ambient pressure 14.75 psia

Gauge serial #: TI-3599 Cal due date: 10/13/06

BJT, 12/3/5
Initials/Date

4.4.1.1 IF there has been NO indication of rising pressure on any of the test gauges, THEN discontinue recording the pressure on test gauges listed on Attachment 17.

BJT, 12/3/5
Initials/Date

4.4.1.2 Continue recording containment atmospheric data at 15 minute intervals using ILRT Measurement System.

BJJ / 12/3/5
Initials/Date

4.4.1.3 Verify Trend Report on plant computer setup to monitor levels in Attachment 14, is running.

BJJ / 12/3/5
Initials/Date

4.4.1.4 Record Initial Water Levels on Attachment 14, (Control Room Log).

BJJ / 12/3/5
Initials/Date

4.4.2 Monitor performance of temperature, humidity, and pressure sensors during conduct of test. Delete any non-operable sensors from calculation and modify weighing factors, if necessary per Attachment 5 Section 3.0. Document reasons for sensor deletion and volume fraction reassignment in the test log, Attachment 1. Record new weighing factors in table in Section 6.0 of Attachment 5.

BJJ / 12/3/5
Initials/Date

NOTE

Notify Nuclear Chemistry Group and Operations at least two hours prior to starting the Verification test.

4.4.3 VERIFY that the Nuclear Chemistry Group has generated a release permit.

BJJ / 12/3/5
Initials/Date

4.4.4 **BN-TOP-1 TEST** (per Bechtel Topical Report BN-TOP-1, Rev.1)
In order to perform a BN-TOP-1 test, the following criteria SHALL be met.

IF a BN-TOP-1 test is NOT performed, THEN place a N/A in space provided below:

BN-TOP-1 Test yes

BJJ / 12/3/5
Initials/Date

4.4.4.1 After a minimum of six (6) hours of acceptable data is obtained, determine if "Preliminary as Left" leakage rate, including known B & C additions from Attachment 15 using Total Time 95% Upper Confidence Level (UCL) as reported by ILRT computer program is < 0.075% wt/day.

BJT, 12/3/5
Initials/Date

4.4.4.2 BN-TOP-1 based on total-time calculations indicates that the magnitude of the calculated leakage rate is tending to stabilize at a value less than 75% of the maximum allowable leakage rate.

BJT, 12/3/5
Initials/Date

NOTE

The magnitude of calculated leakage rate may be increasing slightly as it tends to stabilize. In this case, the average rate of increase of the calculated leakage rate SHALL be determined from accumulated data over the last five (5) hours or last twenty (20) data points, which ever provides more points. Using this average rate, the calculated leakage rate is then linearly extrapolated to the 24th hour data point. This extrapolated value of the calculated leakage rate must be less than 75% of the maximum allowable leakage rate.

4.4.4.3 The mean of measure leak rates based on Total Time Calculations over the last five (5) hours of test or last twenty (20) data points, whichever provides the most data, SHALL be less than 75% of the maximum allowable leak rate.

BJT, 12/3/5
Initials/Date

4.4.4.4 The end of test upper 95% confidence limit for calculated leak rate based on Total Time calculations, plus all known additions SHALL be less than 75% of maximum allowable leak rate.

BJT, 12/3/5
Initials/Date

4.4.4.5 Data SHALL be recorded at approximately equal intervals and in NO case at intervals greater than one (1) hour.

BJT, 12/3/5
Initials/Date

4.4.4.6 At least twenty (20) data points SHALL be provided for proper statistical analysis.

BJJ, 12/3/5
Initials/Date

4.4.4.7 The minimum test duration is six (6) hours.

BJJ, 12/3/5
Initials/Date

4.4.4.8 The following minimum number of sensors was working properly at end of the test:

a. At least twenty (20) drybulb temperature sensors

b. At least four (4) relative humidity sensors

c. At least one (1) pressure gauge

BJJ, 12/3/5
Initials/Date

NOTE

Known Type B and C penalties and leakage savings must be taken into account and added to the Upper Confidence Level (UCL) Leakage Rate. If additional penalties may be required due to leakage paths isolated during the test, an adequate margin between the UCL Leakage Rate and the acceptance criteria should be maintained to accommodate the additional values. If Step 4.4.4.10c is below the acceptance criteria, the verification test may be started prior to completing all of the calculations required by Attachment 15.

4.4.4.9 Record actual duration of ILRT:

6.0 duration in hours

BJJ, 12/3/5
Initials/Date

4.4.4.10 Calculate leakage rates via ILRT computer program. Record ILRT leakage below:

a. Leakage Measured (Lam) ~~0.0861~~ 0.0968 wt%/day

b. Leakage Measured at 95% UCL 0.1338 wt%/day

c. Preliminary As-Left Leakage 0.14073 wt%/day

12/4/05
Consultant / Date

12/04/05
Test Supervisor Verification / Date

4.4.5 **ANSI/ANS 56.8-1994 TEST**

PERFORM ILRT measurements using mass point data analysis method until data indicates the following criteria is met.

IF an ANSI/ANS 56.8-1994 test is NOT performed, THEN place N/A in space provided below.

ANSI/ANS 56.8-1994 Test N/A

4.4.5.1 End of test upper 95% confidence limit for calculated leak rate based on mass point data analysis, plus all known additions SHALL be less than 75% of maximum allowable leak rate.

N/A

/
Initials/Date

4.4.5.2 Data SHALL be recorded at approximately equal intervals and in NO case at intervals greater than one (1) hour.

/
Initials/Date

4.4.5.3 At least thirty (30) data points SHALL be provided for proper statistical analysis.

/
Initials/Date

4.4.5.4 Minimum test duration is eight (8) hours. IF Termination Criteria are NOT met, THEN:

a. Continue the test, until the criteria is met,

_____ / _____
Initials/Date

OR

b. Consider reporting the Total Time results if the criteria for a BN-TOP-1 test can be met.

_____ / _____
Initials/Date

c. Consider restarting Hold Test if adequate pressure and stable conditions exist.

_____ / _____
Initials/Date

d. IF test results appear unacceptable due to excessive leakage, THEN refer to Step 3.0 of Attachment 11.

_____ / _____
Initials/Date

4.4.5.5 At end of 8 hours verify the two termination limits of ANSI 56.8-1994 have been met as follows:

a. Limit on curvature met by meeting any one of three inequalities described by ANSI 56.8-1994, as calculated by ILRT computer program (FTEST<1 or CP>0 or Quad<1).

_____ / _____
Initials/Date

b. Limit on data scatter met (COD>1).

_____ / _____
Initials/Date

c. Limits on curvature and data scatter above 4.4.5.5a and 4.4.5.5b were met for at least the last hour or the last four consecutive data sets (whichever is longer).

_____ / _____
Initials/Date

d. Attach ILRT computer program printout stating Termination Criteria has been met AND Termination Criteria Report printout to ATTACHMENT 16 of this procedure.

_____ / _____
Initials/Date

4.4.5.6 The following minimum number of sensors were working properly at end of test:

a. At least one (1) pressure gauge

b. At least ten (10) drybulb temperature sensors

c. At least three (3) relative humidity sensors

_____ / _____
Initials/Date

N/A

NOTE

Known Type B and C penalties and leakage savings must be taken into account and added to the Upper Confidence Level (UCL) Leakage Rate. IF additional penalties may be required due to leakage paths isolated during the test, THEN an adequate margin between UCL Leakage Rate and acceptance criteria should be maintained to accommodate additional values. IF Step 4.4.5.7c is below acceptance criteria, THEN verification test may be started prior to completing all calculations required by Attachment 15.

4.4.5.7 Calculate leakage rates via ILRT computer program. Record ILRT leakage below:

a. Leakage Measured (Lam) _____ wt%/day

b. Leakage Measured at 95% UCL _____ wt%/day

c. Preliminary As-Left Leakage _____ wt%/day

_____
Consultant / Date

_____
Test Supervisor Verification / Date

4.4.5.8 Record end-of-test Water Levels on Attachment 14, (Control Room Log).

_____ / _____
Initials/Date

NOTE

If a preliminary assessment of test additions/corrections was made prior to ending the ILRT and these additions were determined to have minimal impact on test acceptability, Step 4.5 may be completed after the superimposed leak is imposed and the Verification Test has begun.

4.5 **Verification Test**

4.5.1 Data collection:

4.5.1.1 Record time and date for start of Verification Test:

Time (24 hr clock): 1550 Date: 12/03/05

BJJ, 12/3/5
Initials/Date

4.5.1.2 Record Verification Test Phase Initial Water Levels on Attachment 14, (Control Room Log).

BJJ, 12/3/5
Initials/Date

4.5.1.3 Verify Trend Report on plant computer setup to monitor levels in, Attachment 14 is still running.

BJJ, 12/3/5
Initials/Date

4.5.1.4 Start recording containment atmospheric data in Verification Test Mode of ILRT Data Management Program at 15 minute intervals using ILRT Measurement System.

BJJ, 12/3/5
Initials/Date

4.5.1.5 Continue data acquisition after completion of ILRT through completion of Verification Test.

BJJ, 12/3/5
Initials/Date

4.5.2 OPEN the following valves:

4.5.2.1 LRV-45

BAT, 12/3/5
Initials/Date

4.5.2.2 LRV-46

BAT, 12/3/5
Initials/Date

4.5.2.3 LRV-64 (N/A if not chosen)

N/A
Initials/Date

4.5.2.4 LRV-65 (N/A if not chosen)

N/A
Initials/Date

4.5.3 Throttle valve ~~LRV-64 or LRV-65~~ to establish a flow (Lo) through chosen rotameter of approximately 16.0 scfm (acceptable band is 12.0 – 20.0 scfm). Record rotameter readings at approximately equal intervals NOT to exceed one (1) hour in Attachment 12.

(Rotameter valves were throttled)

12/4/05 N/A
Initials/Date

4.5.3.1 IF a rotometer is used to measure imposed leak, THEN correct its reading to actual conditions in Attachment 12;.
Rotameter M&TE Number: II-0002
Corrected Flow value: 15.95 scfm

12/04/05
Initials/Date

4.5.3.2 Enter corrected flow value into ILRT computer program:

Value entered: 16.0 scfm
per Bob Carey.

12/04/05
Initials/Date

4.5.4 Continue the verification test until the following criteria are met:

4.5.4.1 IF ILRT was performed per BN-TOP-1, Rev.1 (N/A if ILRT per ANSI 56.8-1994), THEN perform the following:

a. IF a short duration test was performed, THEN allow leak to stabilize for a period NOT to exceed one (1) hour from end of ILRT. Data acquisition is to continue throughout stabilization period. IF a 24 hour test or an ILRT under ANSI 56.8-1994 was performed, THEN a leak stabilization period is NOT required.

TMA / 12/04/05
Initials/Date

b. Verification test SHALL continue for one half the duration of the ILRT per BN-TOP-1, Rev. 1. Record duration:

Obtain duration of ILRT from Step 4.4.~~3~~4.9:
ILRT Duration: 6.0 (hrs)

Divide ILRT duration by 2.

6.0 ÷ 2 = 3.0 (hrs)
ILRT duration

TMA / 12/04/05
Initials/Date

c. Determine duration of Verification Test:

Current Time/Date: ~~1645~~ 1946 / 12/4/5

Subtract current time from start time recorded in Step 4.5.1.1:

1946 - ~~1550~~ 1645 (12/4/5) = ~~3.0 hrs~~ 3.01 hrs
Current time - Time from 4.5.1.1 = Duration

BA 12/4/5

IF value of (c) [Verification Test Duration] is greater than (b) [1/2 ILRT duration], THEN Verification test time is sufficient.

(c) 3.01 hrs. > (b) 3.00 hrs.

BA / 12/4/5
Initials/Date

d. Composite Leakage Rate (Lc), as measured by ILRT computer using Total Time data analysis technique results, SHALL satisfy the following (show calculations on Attachment 12):

(L0 + Lam - 0.25 La) ≤ Lc ≤ (Lo + Lam+ 0.25. La)

(0.2865) < 0.2967 < (0.4115)
Lower Limit Lc Upper Limit

BJ, 12/4/5
Initials/Date

4.5.4.2 IF ILRT was performed per ANSI 56.8-1994 (N/A if ILRT per BN-TOP-1), THEN:

a. Verification test SHALL continue for a minimum of four (4) hours. Record duration:

Verification Test Duration: _____ (hrs)

/
Initials/Date

b. Composite Leakage Rate (Lc), as measured by ILRT computer using Mass Point data analysis technique results, SHALL satisfy the following (show calculations on Attachment 12):

(L0 + Lam - 0.25 La) ≤ Lc ≤ (Lo + Lam+ 0.25. La)

(_____)≤ ____ ≤ (_____)
Lower Limit Lc Upper Limit

/
Initials/Date

c. Lc value was within criteria above for the final hour or last four data points (whichever is longer).

/
Initials/Date

d. At least 15 data sets were included in Verification Test result.

/
Initials/Date

4.5.5 IF calculation indicated that Integrated Leak Rate Test is substantiated by verification test, THEN record acceptance in Attachment 1 AND proceed to Step 0.

BJJ 12/4/5
Initials/Date

4.5.6 IF calculation indicates that Integrated Leak Rate Test is NOT substantiated by verification test, THEN perform the following (N/A unused steps):

4.5.6.1 Continue data acquisition until data stabilizes within acceptance criteria band (if appropriate).

/
Initials/Date

4.5.6.2 Recheck verification flow meters AND ILRT measurement system, raw data and leak rate calculations for errors.

N/A

/
Initials/Date

4.5.6.3 IF errors are found and corrected, THEN continue verification test data acquisition until requirements of 4.5.4.1 or 4.5.4.2 are met.

/
Initials/Date

4.5.6.4 IF NO errors can be found AND test pressure is still above 0.96Pa, THEN consider securing superimposed leak and re-measuring Lam (restart ILRT) per Section 4.4.

/
Initials/Date

4.5.7 WHEN Verification Test acceptance criteria has been met, THEN perform the following:

4.5.7.1 Record the time and date for the start of the Verification Test:

Time (24 hr clock): 1645 Date: 12/4/5

BJJ / 12/4/5
Initials/Date

4.5.7.2 Record end of Verification Test Phase Water Levels on Attachment 14, (Control Room Log).

BJJ / 12/4/5
Initials/Date

4.5.7.3 Trend Report on plant computer is setup to monitor levels in Attachment 14, (Control Room Log) can be discontinued.

BJT / 12/4/5
Initials/Date

4.5.7.4 Secure imposed leak, Lo by isolating the flowmeter. CLOSE LRV-64 or LRV-65

N/A
Initials/Date

NOTE

Restoration of plant and containment from ILRT may begin at SSO's / test supervisor's discretion (Attachment 3B may provide a safe place to start).
Notify Maintenance Support and Compressor vendor that break-down and removal of pressurization system compressors may begin.
Wear appropriate hearing protection in all areas so designated.

4.6 **Depressurization**

4.6.1 Announce the following 3 times over plant page.

"ATTENTION ALL PERSONNEL, ATTENTION ALL PERSONNEL, REACTOR CONTAINMENT BUILDING DEPRESSURIZATION IS ABOUT TO COMMENCE. ALL NON ESSENTIAL PERSONNEL STAND CLEAR OF THE SOUTHWEST TURBINE BLDG 119 EL AND WEST BERM AREA BETWEEN CONDENSATE STORAGE TANK AND FIRE SERVICE TANKS."

TMA / 12/4/05
Initials/Date

CAUTION

WHEN a depressurization path throttle valve is full open, AND depressurization rate has fallen below 15 psi, THEN begin to OPEN a secondary depress path throttle valve. Maintain a maximum depressurization rate NOT to exceed 15 psi/hr. The depressurization rate will be monitored minute-by-minute from the ILRT test table, and directions to open/close valves will originate there to enable controlling the depressurization rate.

4.6.2 IF either of the airlocks are pressurized at the end of the ILRT take steps to depressurize the airlock(s) to prevent damaging the inner door by inappropriately applied d/p. The airlock must be depressurized or always at a pressure below containment pressure.

TMA / 12/04/05
Initials/Date

4.6.3 WHEN permission from Test Supervisor is given, THEN SLOWLY OPEN a depressurization path blowdown valves and release air from containment, maintaining a maximum rate of 15 psi/hr. The following penetrations are listed in order of preference, however, they may be selected as a depressurization path in any order.

4.6.3.1 **Pen-305/306 (6")**

4.6.3.1.1 NOTIFY Chemistry to generate GRWRP for RB purge (batch type)

- ✓ ENSURE Chemistry submits GRWRP to Operations when sampling and analysis are completed

12.4.05
Initials/Date

4.6.3.1.2 ENSURE RB exhaust fans are aligned to normal operation

- PLACE "PERMISSIVE BYPASS" switch in "NORMAL" and KEY REMOVED
  - ✓ AHF-7A vent MCC-3A, Unit 10C
  - ✓ AHF-7B vent MCC-3B, Unit 9C

12.4.5
Initials/Date

4.6.3.1.3 ENSURE RB exhaust dampers are aligned to normal operation

- Both 3 way valves on Air Handling Panel 13 pointing to left (Normal Operation)
  - ✓ AHV-77 SELECTED to Normal operation of AHD-95, AHD-96, and AHD-94
  - ✓ AHV-78 SELECTED to Normal operation of AHD-97, AHD-98, and AHD-94

12.4.5
Initials/Date

4.6.3.1.4 ENSURE Particulate, Iodine, and Gaseous Channels of Reactor Bldg. Purge Duct Monitor are operating prior to and during purge operation

1. WHEN energization of RM-A1 is required, THEN PERFORM Enclosure 7 of OP-417, Startup/Shutdown of RM-A1
2. ✓ PERFORM all sections of SP-335E, RM-A1 Interlock with LRV Valves

12-4-5
Initials/Date

NOTE

The "Reactor Bldg Purge Air Flow Low" alarm is expected to come in when AHF-7A or AHF-7B is started. As long as Step 4.6.3.1.6 (flow requirement) is met, no actions are required.

4.6.3.1.5 START Reactor Bldg Purge Exhaust Fan

1. ✓ NOTIFY Chemistry prior to start of purge
2. __ START AHF-7A

   OR

   ✓ START AHF-7B 2049
3. ✓ NOTIFY HP that RB purge has started
4. ✓ RECORD Start Time and Date on "Permit Completion" section of GRWRP

[illegible] 1/2-4-5
Initials/Date

4.6.5.1.6 PERFORM Channel Check on AH-032-FIR (Channel D) ensuring >20,000 scfm and at least once per 12 hours during purge operation

- ✓ RECORD Channel Check on Enclosure 9 of OP-417, RB Purge Channel Check Log

[illegible] 1/2-4-5
Initials/Date

4.6.3.1.7 PERFORM RM-A1 gas Channel Checks every 12 hours

- ✓ RECORD Channel Check on Enclosure 9 of OP-417, RB Purge Channel Check Log

[illegible] 1/2-4-5
Initials/Date

4.6.3.1.8 PERFORM RB depressurization

- 1. ✓ CLOSE LRV-121
  ✓ CLOSE LRV-123
  ✓ OPEN LRV-119
  ✓ OPEN LRV-120
- 2. ✓ OPEN LRV-70
  ✓ OPEN LRV-71
  ✓ OPEN LRV-72
  ✓ OPEN LRV-73
  3. ✓ OPEN or THROTTLE LRV-122, as necessary to maintain a maximum depressurization rate NOT to exceed 15 psi/hr
- 4. ✓ NOTIFY HP and CHEMISTRY when flow is established, so they can obtain required samples

AB / 12-4-05
Initials/Date

4.6.3.2 **Pen-216 (8")**

- ✓ CLOSE PEN216-TV3 (compressor isolation valve)
- ✓ OPEN PEN216-TV4 (muffler isolation valve)
- ✓ OPEN PEN216-TV1 (penetration isolation valve)
- ✓ OPEN or THROTTLE PEN216-TV2 (throttle valve) as necessary to maintain a maximum depressurization rate NOT to exceed 15 psi/hr

AB / 12.4.5
Initials/Date

4.6.3.3 **Pen-217 (8")**

- ✓ CLOSE PEN217-TV7 (compressor isolation valve)
- ✓ OPEN PEN217-TV8 (muffler isolation valve)
- ✓ OPEN PEN217-TV5 (penetration isolation valve)
- ✓ OPEN or THROTTLE PEN217-TV6 (throttle valve) as necessary to maintain a maximum depressurization rate not to exceed 15 psi/hr

AB / 12-5-5
Initials/Date

4.6.3.4 **Pen-122 (3")**

- ✓ ENSURE removal of blind flange downstream of LRV-99
- ✓ CLOSE LRV-98
- ✓ OPEN LRV-87
- ✓ OPEN LRV-88

AG, 12.5.5
Initials/Date

4.6.3.5 **Pen-121 (3")**

- ✓ ENSURE removal of blind flange downstream of LRV-101
- ✓ CLOSE LRV-100
- ✓ OPEN LRV-89
- ✓ OPEN LRV-90

AG, 12.5.5
Initials/Date

4.6.3.6 **Pen-125 (3")**

- ✓ ENSURE removal of blind flange downstream of LRV-105
- ✓ CLOSE LRV-104
- ✓ OPEN LRV-93
- ✓ OPEN LRV-94

AG, 12.5.5
Initials/Date

4.6.3.7 **Pen-125 (3")**

- ✓ ENSURE removal of blind flange downstream of LRV-103
- ✓ CLOSE LRV-102
- ✓ OPEN LRV-91
- ✓ OPEN LRV-92

AG, 12.5.5
Initials/Date

4.6.4 WHEN containment pressure is less than 2 psig, THEN containment atmosphere SHALL be sampled by Health Physics followed by containment entry and final walk through prior to allowing personnel access.

TRA / 12/5/05
Initials/Date

4.7 **Final ILRT Results**

> **NOTE**
>
> Only the "As Left" leakage calculated in step 4.7.1.1 below must be met prior to entering a mode of operation that requires containment integrity. Unacceptable "As Found" or "Performance" leakage rates may be dispositioned per the Containment Leak Rate Testing Program and CAP-NGGC-0200, Corrective Action Program.

4.7.1 WHEN all local leakage rate additions AND corrections to ILRT are known, THEN CALCULATE Final ILRT leakage rates in Attachment 15, (ILRT Results Summary).

4.7.1.1 "AS LEFT" Leakage:

Sum of above reported Lam & UCL "AS LEFT"

(from Attachment 15 Section 8): 0.1352 %wt/day < 0.1875%wt/day

TRA / 12-06-05
Initials/Date

4.7.1.2 "AS FOUND" Leakage:

Sum of above reported Lam & UCL "AS FOUND" (from Attachment 15 Section 9).

(from Attachment 15 Section 9): 0.19566 %wt/day < 0.25%wt/day

BAJ / 2/27/6
Initials/Date

4.7.1.3 PERFORMANCE Leakage:

Sum of above report Lam & UCL "AS LEFT" and as-left minimum pathway leakage rate of any pathway isolated during ILRT due to excessive leakage (from "As-Left" results Attachment 15 Section 8)

(from Attachment 15 Section 8): 0.1352 %wt/day < 0.25%wt/day

BAJ / 2/27/6
Initials/Date

5.0 **FOLLOW UP ACTIONS**

5.1 **Contingencies**

See Attachment 11

6.0 **RESTORATION**

6.1 **Restoration Instructions**

6.1.1 Inform SSO RB depressurization is complete.

_____ / 12-5-5
Initials/Date

6.1.2 Restore depressurization paths:

6.1.2.1 **Pen-305/306**

6.1.2.1.1 ENSURE CLOSED:

- ✓ LRV-70 ✓ LRV-71
- ✓ LRV-72 ✓ LRV-73
- ✓ LRV-119 ✓ LRV-120
- ✓ LRV-122

_____ / 12-5-5
Initials/Date

6.1.2.1.2 RECORD Stop Time and Date on "Permit Completion" section of GRWRP

_____ / 12-5-5
Initials/Date

6.1.2.1.3 STOP Reactor Bldg Purge Exhaust Fans

- ✓ STOP AHF-7A

  AND

- ✓ STOP AHF-7B

_____ / 12-5-5
Initials/Date

STARTUP/SHUTDOWN OF RM-A1

Startup:

1. ENERGIZE the RM-A1 ratemeter drawers by selecting the respective ratemeter power switch and high voltage switches "ON" for the following:

   RM-A1 Particulate [ ]
   RM-A1 Iodine [ ]

2. VERIFY RM-A1 "POWER" lights are LIT on Radiation Monitoring Panel. [ ]

3. RESET alarms as necessary. [ ]

4. CLOSE the following annunciator links:

   1712 RM-A1 RB Purge Duct Rad Level High [ ]
   1713 RM-A1 RB Purge Duct Rad Level Low/Fail [ ]
   1714 RM-A1 RB Purge Duct Rad Monitor Flow High/Low [ ]

N/A

/
Initial/Date

Shutdown:

1. OPEN the following annunciator links:

   1712 RM-A1 RB Purge Duct Rad Level High [✓]
   1713 RM-A1 RB Purge Duct Rad Level Low/Fail [✓]
   1714 RM-A1 RB Purge Duct Rad Monitor Flow High/Low [✓]

2. DEPRESS and RELEASE RM-A1 "HORN SILENCE" pushbutton. [✓]

3. VERIFY "HORN SILENCE" pushbutton is backlit. [✓]

4. SECURE the RM-A1 ratemeter drawers by selecting the respective ratemeter power switch and high voltage switches OFF for the following:

   RM-A1 Particulate [✓]
   RM-A1 Iodine [✓]

12-5-5
Initial/Date

RB PURGE CHANNEL CHECK LOG

Time/Date	RM-A1 Gas Channel Check Sat (initials)	AH-32-FIR Channel Check Sat* (initials)	Time/Date	RM-A1 Gas Channel Check Sat (initials)	AH-32-FIR Channel Check Sat* (initials)
2100/1245	[illegible]	[illegible]			

*Note: IF AH-32-FIR Channel Check Unsat,
THEN GO TO Enclosure 11, Δ Pressure to Reactor Building Flow Conversion (AH-299-DPT), to estimate flow.

GAS RELEASE PERMIT

ESTIMATED RELEASE CONDITIONS (CHEMISTRY)	
Release Point ID: RB Ventilation – Post ILRT	Permit Number: 50086 .016. 002 .G
Release Approved By: RDT	Special Requirements:
Release Data Verified By: DM Vaughan	NOTIFY Chemistry when release starts (evidence of flow on LR-60-FI1 or AH-32-FIR, Channel B, as applicable).
Monitor: RM-A1G	
Initial Max Warning Setpoint: 120 cpm	Updated setpoints will be provided after the release starts.
Initial Max High Trip Setpoint: 5.0E5 cpm	IF RM-A1 gas high trip occurs, IMMEDIATELY secure the release.
Updated Max Warning Setpoint: 105 cpm	
Updated Max High Trip Setpoint: 8.0E5 cpm	

ACTUAL RELEASE CONDITIONS (OPERATIONS)	
Release Approved By (CRS)/Date: [signature] 12/04/05	
Initial RM-A1G Warning Setpoint: 100 cpm	Initial RM-A1G High Trip Setpoint: 500,000 cpm
RM-A1G Source/Wand Check Complete per OP-417	By/Date: [signature] 12-4-5
Updated RM-A1G Warning Setpoint: 100 cpm	Updated RM-A1G High Trip Setpoint: 800,000 cpm

PERMIT COMPLETION (OPERATIONS)	
RB Purge Start Date/Time: 12-4-5/2049	RB Start Pressure (BS-93-PIR) 53.5 psig
IF terminating the RB purge, THEN RECORD actual release stop date/time: 12-5-5/0430	RB Stop Pressure (BS-93-PIR) 0.0 psig
Release Completion Approved By (CRS)/Date: Mary B. Warren 12.5.5	

Copy

6.1.2.1.4 COMPLETE GRWRP

1. ✓ COMPLETE Permit Completion section.
2. ✓ ATTACH Enclosure 9 of OP-417, RB Purge Channel Check Log, to GRWRP
3. ✓ RETURN original Permit to Chemistry Department
4. ✓ DE-ENERGIZE RM-A1 using Enclosure 7 of OP-417, Startup/Shutdown of RM-A1

AB / 12-5-5
Initials/Date

6.1.2.2 **Pen-216 (8")**

- ✓ REMOVE PEN216-TV1 (penetration isolation valve)
- ✓ REMOVE test flange
- ✓ ENSURE permanent flange is reinstalled

/ 12/5/5
Initials/Date

6.1.2.3 **Pen-217 (8")**

- ✓ REMOVE PEN217-TV5 (penetration isolation valve)
- ✓ REMOVE test flange
- ✓ ENSURE permanent flange is reinstalled

/ 12/5/05
Initials/Date

6.1.2.4 **Pen-122 (3")**

- ✓ ENSURE reinstallation of blind flange downstream of LRV-99
- ✓ CLOSE LRV-87
- ✓ CLOSE LRV-88

~~TWA~~ 12/6/05
~~/ 12-5-5~~
MD 12/5/05
Initials/Date

6.1.2.5 **Pen-121 (3")**

- ✓ ENSURE reinstallation of blind flange downstream of LRV-101
- ✓ CLOSE LRV-89
- ✓ CLOSE LRV-90

TMA 12/6/05
~~U 1235.5~~
Initials/Date

MD 12/5/05

6.1.2.6 **Pen-125 (3")**

- ✓ ENSURE reinstallation of blind flange downstream of LRV-105
- ✓ CLOSE LRV-93
- ✓ CLOSE LRV-94

TMA / 12/6/05
Initials/Date

6.1.2.7 **Pen-125 (3")**

- ✓ ENSURE reinstallation of blind flange downstream of LRV-103
- ✓ CLOSE LRV-91
- ✓ CLOSE LRV-92

TMA / 12/6/05
Initials/Date

6.1.3 REINSTALL LRV-69 and LRV-63 and associated tubing removed in Step 3.4.10.

N/A
Initials/Date

6.1.4 REMOVE all instrumentation specified under Attachment 17.

TMA / 12/6/05
Initials/Date

6.1.5 REMOVE instrumentation installed from Attachment 5.

TMA / 12/5/05
Initials/Date

Active Operator Logs
Draft

Date / Time	Entry	Name	
12/5/2005 9:33:24 AM	06:00 Assumed OSS eng mgr duty.	MBISHARA	18 ENG
12/5/2005 9:34:23 AM	ACTION: 6 scaffolding installations will remain in the RB between modes 4 and 1. Beechwood to evaluate on second shift. These are associated with DHV-4, INCORE CABLES, PEN 216 &217, SP-929 (MUV-390, 391, 392 & 393), CFV-5, AND LP-2-MTI loose parts monitor (B) D-Ring.	MBISHARA	18 ENG
12/5/2005 9:44:10 AM	ACTION: SP-440, engineering sign offs needed before mode 4. M. Denny is single point of contact. Scope is SP-177, 178, 179B, 179C, 201, 208, 604,and 929.	MBISHARA	18 ENG
12/5/2005 9:48:40 AM	INFORMATION: AI-1701, system walkdowns are complete for mode 4. All identified open WO's were given to Brian Taylor/ Restraints Group to make sure that they are idetified and tied to mode 4.	MBISHARA	18 ENG
12/5/2005 12:34:39 PM	ACTION: SP-810A, RB radiant energy, ken miller will perform this SP after the completion of WO 545187-02 (DUDEK) to install fire wrap. This is mode 3 restraint and will be done 12/06 by 17:00.	MBISHARA	18 ENG
12/5/2005 12:39:47 PM	ACTION: WCP-103, Mode 4 readiness...night shift to make sure remaining items for engineering are complete in preparation for sign off on day shift tomorrow, 12/6/05.	MBISHARA	18 ENG
12/5/2005 2:09:22 PM	INFORMATION: Glenn Pugh issued TLR05-0075 for access to valves SWV-539/542.	MBISHARA	18 ENG
12/5/2005 2:21:25 PM	INFORMATION: EC 48843, was reviewed by glenn pugh in preparation for possible revision tomorrow if the HP turbine cross over leak occurs. Pugh/Reynolds to follow up tomorrow if a revision is needed.	MBISHARA	18 ENG
12/5/2005 2:31:38 PM	ACTION: NCR 177842, was generated documenting debris in the RB that was found today and could not be accessed for removal . C. Beechwood to respond to REW on second shift tonight..mode 4 restraint.	MBISHARA	18 ENG
12/5/2005 3:25:54 PM	Information - engineering was requested to evaluate taking an exception to SP178, section 6.1.11 for recalibrating 16 pressure switches associated with the 4 and 30 psi ES signals. Engineering reviewed the vendor literature for the Static-O-Ring and United Electric Controls pressure switches and both manufacturers stated that the switches have an overpressure range of 100 psig. Since the ILRT pressure was approximately 54 psig, the overpressure range was not exceeded and therefore the pressure switch setpoints should not have been affected. Recalibration of the pressure switches is not necessary.	SBARKOFSKI	18 ENG

6.1.6 COMPLETE removal of temporary pressurization/depressurization system piping and components and restoration of permanent plant components per Attachment 4.

TMA / 12-5-05
Initials/Date

6.1.7 RESTORE all valves and breakers to correct Post Test position as outlined in Attachments 3A, 3B, 3C, 3D, 3E, 4, 6 ,7 and 8 or as required by CRS. IF CRS or SSO requires use of check-off list (COL), THEN document COLs used in Comments Section. Attach all COLs to this procedure.

AB / 12-5-5
Initials/Date

6.1.8 COMPLETE Attachment 2, returning all equipment which could be damaged by high pressure to its pre-test condition, or as required by CRS or SSO.

/ 12/5/05
Initials/Date

6.1.9 REMOVE the jumpers installed and close the sliding links opened in Attachment 2.

AB / 12-5-5
Initials/Date

6.1.10 Independently verify jumper removal and closing of sliding links in Attachment 2.

TMA / 12/5/05
Initials/Date

6.1.11 Recalibrate per SP-112R, RPS Reactor Building Pressure Trip Calibration, and SP-132A/B/C, Engineered Safeguards Channel 1/2/3 Calibration, the following instruments:

o _____ BS-18-PS	o ___ BS-26-PS
o _____ BS-19-PS	o ___ BS-27-PS
o _____ BS-20-PS	o ___ BS-28-PS
o _____ BS-21-PS	o ___ BS-29-PS
o _____ BS-22-PS	o ___ BS-59-PS
o _____ BS-23-PS	o ___ BS-60-PS
o _____ BS-24-PS	o ___ BS-61-PS
o _____ BS-25-PS	o ___ BS-62-PS

N/A /
Initials/Date

12/5/05

* Pressure Switches never exceeded pressure rating. Engr concurred with this N/A reference Engr outage log 12/5/05 3:25:54 PM

6.1.12 Restore Radiation Monitors RM-G16, RM-G17 and RM-G18 and associated Radiation Monitoring System), and restore G-M tubes per Attachment 2.

12/5/05
Initials/Date

6.1.13 RESTORE Reactor Building Cooling Unit, AHF-1A, 1B or 1C as indicated in step 3.4.52, per Attachment 2.

12/5/05
Initials/Date

6.1.14 NOTIFY SSO the ILRT is complete.

12/6/05
Initials/Date

7.0 COMMENTS

Page ____ of ____

Comments continued: Page ____ of ____

Make additional copies as necessary

Test Performer Signatures:

Print Name:	Initials:	Signature/Date:
ANTHONY Teti	AG	11.18.5
WARREN GELL	W	11.18.5
ERIK SMITH	ES	11-18-05
BERRY FOSTER	BJF	11/20/05
A.M. BARNES	AB	11.28.05
DAVID M. ARNITZ	DA	11-28-05
Robert M. CAREY	RMC	11-30-05
Jerime S. Cornell	JC	11-30-05
DONNA J. WOOD	DW	11/30/05
TIM Howard	TH	12/01/05
JOHN STEVE	JS	12-1-05
PENTHER FREEMAN	PF	12-1-5
Joel Wright	JW	12-2-5
Don Alexander	DA	12-2-5
MIKE Doolittle.	MD	12-2-05
KEITH SHARKEY	KS	12/2/5
BRIAN SHRTRONE	BS	
E MUIR	EM	12/3/5
JAMES T. ATKINSON	JTA	12/3/05
Thomas Tate	TT	12-3-5
Sean Corbett	SC	12.3.5
ART GIVERSON	AG	12/3/05
TONY RENIER	TR	12/3/05
Richard Pepin	RP	12/5/05

Test Performer Signatures:

Print Name:	Initials:	Signature/Date:
ANTHONY TETI	AT	12-5-5
Scott Schiel		120 52K5
WARREN GELL	W	12.5.5
DAVID ARNITZ		12-5-05
John Wilcox		12.5.5
MIKE JUNCKMAN		12/5/5
T.S. Sharp	TSS	12.5.05

Test Performer Signatures:

Print Name:	Initials:	Signature/Date:
E Lee	EL	E Lee 30.05
Sean Corbett	SMC	Sean Corbett 12.3.5
Robert E. Shirk	RES	Robert E. Shirk 12/3/05
Dan Kahlir	DK	DK 12/5/5
Stephen Betts	SB	SBetts 12/5/5

8.0 **EVALUATION**

8.1 **Equipment Performance Review**

Comments: none

Reviewed By: [illegible] 12/3/5
Programs and Components Review / Date

ATTACHMENT 1
TEST SUPERVISOR'S LOG
(Page 1 of 1)

DATE:_____/_____/_____
Page _____ of _____

TIME:	REMARKS:

NOTE: MAKE ADDITIONAL SHEETS AS NECESSARY. AUTOLOG IS AN ACCEPTABLE LOG METHOD.

ATTACHMENT 2
CONTAINMENT PREPARATION CHECKLIST
MECHANICAL MAINTENANCE:

EQUIPMENT PROTECTION/PREPARATION

Any equipment which may be damaged when subjected to high pressure should be removed from containment or vented. NOT included is any instrumentation associated with containment isolation or monitoring of accident conditions. Use blank lines to document any items removed or vented NOT already listed in this attachment. Removed equipment SHALL be properly stored.

EQUIPMENT	PROTECTION	VERIFICATION SIGNATURE & DATE	
		COMPLETED	RESTORED
Main Bridge Fuel Handling Hoist (2)	Ensure that the vents are clear for the gear box oil reservoirs	C N. Ahr 12-2-05	N/A CNA 12-2-05
Main Bridge Trolley Travel Gear Box	Ensure that the vents are clear for the gear box oil reservoir	C N. Ahr 12-2-05	N/A
Aux Bridge Trolley Travel Gear Box	Ensure that the vents are clear for the gear box oil reservoir	C N. Ahr 12-2-05	N/A
Upender Gear Box (FACR-4A)	Ensure that the vents are clear for the gear box oil reservoir	C N. Ahr 12-2-05	N/A
Upender Gear Box (FACR-4B)	Ensure that the vents are clear for the gear box oil reservoir	C N. Ahr 12-2-05	N/A
Main Bridge Travel Gear Box	Remove the vent plugs from the gear box oil reservoir	Not Required C N. Ahr 12-2-05	N/A
Aux Bridge Travel Gear Box	Remove the vent plugs from the gear box oil reservoir	Not Required C N. Ahr 12-2-05	N/A
Nitrogen, argon oxygen/acetylene, (etc.) bottles	Remove from containment		
RB cooling unit AHF-1A, 1B, or 1C temporarily modified with flow baffle CaID# 52700753 (only one unit required, as indicated in step 3.4.52).	Ensure that fan will operate if needed due to higher density of compressed air during ILRT.	[illegible] 12/2/05	

ATTACHMENT 2
CONTAINMENT PREPARATION CHECKLIST
MECHANICAL MAINTENANCE:

EQUIPMENT PROTECTION/PREPARATION

Any equipment which may be damaged when subjected to high pressure should be removed from containment or vented. NOT included is any instrumentation associated with containment isolation or monitoring of accident conditions. Use blank lines to document any items removed or vented NOT already listed in this attachment. Removed equipment SHALL be properly stored.

EQUIPMENT	PROTECTION	VERIFICATION SIGNATURE & DATE	
		COMPLETED	RESTORED
Main Bridge Fuel Handling Hoist (2)	Ensure that the vents are clear for the gear box oil reservoirs	12/3/05	12/5/05
Main Bridge Trolley Travel Gear Box	Ensure that the vents are clear for the gear box oil reservoir	12/3/05	12/6/5
Aux Bridge Trolley Travel Gear Box	Ensure that the vents are clear for the gear box oil reservoir	12/3/05	12/5/5
Upender Gear Box (FACR-4A)	Ensure that the vents are clear for the gear box oil reservoir	BJF 12/3/05	12/5/5
Upender Gear Box (FACR-4B)	Ensure that the vents are clear for the gear box oil reservoir	BJF 12/3/05	12/5/5
Main Bridge Travel Gear Box	Remove the vent plugs from the gear box oil reservoir	~~12/3/05~~ 12-3-05	12/5/5
Aux Bridge Travel Gear Box	Remove the vent plugs from the gear box oil reservoir	~~12/3/05~~ 12-3-05	12/5/5
Nitrogen, argon oxygen/acetylene, (etc.) bottles	Remove from containment	12/3/5	12/5/5
RB cooling unit AHF-1A, 1B, or 1C temporarily modified with flow baffle Cat ID# 52700753 (only one unit required, as indicated in step 3.4.52).	Ensure that fan will operate if needed due to higher density of compressed air during ILRT.	12/4/05	12/5/5

ATTACHMENT 2
CONTAINMENT PREPARATION CHECKLIST
INSTRUMENTATION & CONTROLS

EQUIPMENT PROTECTION/PREPARATION

Any equipment which may be damaged when subjected to high pressure should be removed from containment or vented. NOT included is any instrumentation associated with containment isolation or monitoring of accident conditions. Use blank lines to document any items removed or vented NOT already listed in this attachment. Removed equipment SHALL be properly stored.

EQUIPMENT	PROTECTION	VERIFICATION SIGNATURE & DATE	
		COMPLETED	RESTORED
Nuclear Services Closed Cycle Cooling System flow indicator SW-209-FI	Loosen front cover, insert a 1/8-in. paper wedge between the cover's seating surfaces, then tighten the cover loosely. The switch should be covered with plastic to prevent entry of dirt and moisture.	JCW 11/29/05	12/5/05
AH-656-FIS, a Brooks Model #1110 flow switch	Loosen front cover, insert a 1/8-in. paper wedge between the cover's seating surfaces, then tighten the cover loosely. The switch should be covered with plastic to prevent entry of dirt and moisture.	JCW 11/29/05	12/5/05
AH-657-FIS, a Brooks Model #1110 flow switch	Loosen front cover, insert a 1/8-in. paper wedge between the cover's seating surfaces, then tighten the cover loosely. The switch should be covered with plastic to prevent entry of dirt and moisture.	JCW 11/29/05	12/5/05
AH-658-FIS, a Brooks Model #1110 flow switch	Loosen front cover, insert a 1/8-in. paper wedge between the cover's seating surfaces, then tighten the cover loosely. The switch should be covered with plastic to prevent entry of dirt and moisture.	JCW 11/29/05	12/5/05
MU-31-FT1, Brooks rotameter transmitter	Loosen front cover, insert a 1/8-in. paper wedge between the cover's seating surfaces, then tighten the cover loosely. The switch should be covered with plastic to prevent entry of dirt and moisture.	JCW 11/29/05	12/5/05
MU-31-FT2, Brooks rotameter transmitter	Loosen front cover, insert a 1/8-in. paper wedge between the cover's seating surfaces, then tighten the cover loosely. The switch should be covered with plastic to prevent entry of dirt and moisture.	JCW 11/29/05	12/5/05

Tamper Seal S/S

ATTACHMENT 2
CONTAINMENT PREPARATION CHECKLIST
INSTRUMENTATION & CONTROLS

EQUIPMENT	PROTECTION	VERIFICATION SIGNATURE & DATE	
		COMPLETED	RESTORED
MU-31-FT3, Brooks rotameter transmitter	Loosen front cover, insert a 1/8-in. paper wedge between the cover's seating surfaces, then tighten the cover loosely. The switch should be covered with plastic to prevent entry of dirt and moisture.	JCW 11-29-05	12/5/05
MU-31-FT4, Brooks rotameter transmitter	Loosen front cover, insert a 1/8-in. paper wedge between the cover's seating surfaces, then tighten the cover loosely. The switch should be covered with plastic to prevent entry of dirt and moisture.	JCW 11-29-05	12/5/05
DW-23-FIC, Brooks rotameter transmitter	Loosen front cover, insert a 1/8-in. paper wedge between the cover's seating surfaces, then tighten the cover loosely. The switch should be covered with plastic to prevent entry of dirt and moisture.	Cover missing JCW 11-29-05	12/5/05
DW-24-FIC, Brooks rotameter transmitter	Loosen front cover, insert a 1/8-in. paper wedge between the cover's seating surfaces, then tighten the cover loosely. The switch should be covered with plastic to prevent entry of dirt and moisture.	leaking JCW 11/29/05	12/5/05
DW-25-FIC, Brooks rotameter transmitter	Loosen front cover, insert a 1/8-in. paper wedge between the cover's seating surfaces, then tighten the cover loosely. The switch should be covered with plastic to prevent entry of dirt and moisture.	cover missing JCW 11/29/05	12/5/05
DW-26-FIC, Brooks rotameter transmitter	Loosen front cover, insert a 1/8-in. paper wedge between the cover's seating surfaces, then tighten the cover loosely. The switch should be covered with plastic to prevent entry of dirt and moisture.	in incore room (66) BJF	NA
NOTE: TSI Material must be removed at preamplifier NI-002-B4 to permit access to box covers.			

(66) DW-26-FIC does not have a seal that requires a paper wedge. BJ Foody 12/05/05

ATTACHMENT 2
CONTAINMENT PREPARATION CHECKLIST
INSTRUMENTATION & CONTROLS

EQUIPMENT	PROTECTION	VERIFICATION SIGNATURE & DATE	
		COMPLETED	RESTORED
NI-001-A4 Nuclear instrumentation preamplifier	Loosen both the inner and outer box covers. Insert a 1/8-in. paper wedge and retighten the covers loosely. The outer box should be covered with plastic to prevent entry of dirt and moisture.	JCW 11-29-05	12/5/05
NI-002-B4 Nuclear instrumentation preamplifiers	Loosen both the inner and outer box covers. Insert a 1/8-in. paper wedge and retighten the covers loosely. The outer box should be covered with plastic to prevent entry of dirt and moisture.	JCW 11-29-05	12/5/05
RB cooling unit AHF-1A, 1B, or 1C temporarily modified with 129 Amp overload (only one unit required, as indicated in step 3.4.52).	Ensures fan will operate if needed due to higher density of compressed air during ILRT.	BJJ 12/01/05	12/5/05
Radiation Monitor RM-G16, RM-G17 and RM-G18 GM Tubes	Remove G-M tubes (if required) RM-G16, RM-G17 and RM-G18	12/2/05	12/05/05

ATTACHMENT 2
CONTAINMENT PREPARATION CHECKLIST
OTHER WORK GROUPS

- **OPERATIONS (REFUELING TEAM)**

EQUIPMENT	PROTECTION	VERIFICATION SIGNATURE & DATE	
		COMPLETED	RESTORED
TV monitor	Remove from containment (if required)	Charles N. Alva	Not Required
Position readout units	Remove from containment (if required)	Charles N. Alva	Not Required
Load meters and power supply	Remove from containment (if required)	Charles N. Alva	Not Required
Refueling Bridge Controls	Remove any controls containing electrolytic capacitors that could leak from exposure to the pressure	12-1-05 Charles N. Alva	Not Required

- **ELECTRICAL MAINTENANCE**

EQUIPMENT	PROTECTION	VERIFICATION SIGNATURE & DATE	
		COMPLETED	RESTORED
Polar Crane normal lighting.	Remove	12-3-05 R. Weaverman	12/5/05
Polar Crane emergency lighting.	Remove	12-3-05 R. Weaverman	12/5/05
Polar Crane Controls	Remove any controls containing electrolytic capacitors that could leak from exposure to the pressure	12-3-05 R. Weaverman	12/5/05

Transferred Aron Varney 01/14

 12/13

ATTACHMENT 2
CONTAINMENT PREPARATION CHECKLIST
OTHER WORK GROUPS

- **OTHER WORK GROUPS: CONTAINMENT COORDINATOR OVERSEES**

EQUIPMENT	PROTECTION	VERIFICATION SIGNATURE & DATE	
		COMPLETED	RESTORED
Nitrogen, argon oxygen/ acetylene, (etc.) bottles	Remove from containment	DD	12/5/05
Fire extinguishers	Remove from containment	RD	
Wooden scaffolding	Remove from containment	DD	
Gang boxes	Vent boxes, remove aerosol cans, tubes of lubricant	DD	
Temporary Fluorescent & incandescent lights	Remove from containment	DD	
Computer monitors, CCTV monitors, test equipment with tube-based displays	Remove from containment	DD	
55 gallon storage drums	Vent drum by removing bunge hole cover or popping lid	DD	
Spray Units	Vent any spray units that are pressure tight (e.g. those used for de-contamination)	DD	

ATTACHMENT 3
ILRT VALVE LINEUP INSTRUCTIONS

CHECKLIST CONTENTS:

ATTACHMENT 3A: ILRT VALVE LINEUPS PRIOR TO PRESSURIZATION
Checklist consists of penetration alignments that must be completed prior to start of pressurization either because they include components to check while access is available to containment, OR to avoid potential closure problems once pressurization has started. NO penetration containing liquid is vented OR drained by this procedure, AND lineups are NOT sequence critical.

ATTACHMENT 3B: ILRT VALVE LINEUPS PRIOR TO STABILIZATION
Checklist consists of penetration alignments that may be completed after pressurization has started because they include NO components to position inside containment, or those components are remotely operated in closed systems NOT exposed to test pressure. A penalty addition is planned for all of these penetrations so closure method and closure sequence is NOT critical.

ATTACHMENT 3C: ILRT SPECIAL VALVE LINEUPS Checklist consists of penetration alignments that must be completed prior to the start of pressurization, and are considered to be sequence critical.

CHECKLIST COMPLETION:

> **CAUTION**
> Unless otherwise instructed by the Superintendent Shift Operations, IF line will be opened/vented OR CIVs must be opened DO NOT perform the Penetration Line Up when containment integrity is required. Penetration lineups that do NOT entail opening lines, venting/draining systems may be performed anytime as directed by the Test Supervisor.

Issue the Line up Checklists to Operations and attach a copy of these instructions

> **CAUTION**
> Do NOT change Clearance Tagout boundaries without first obtaining approval from ILRT Test Supervisor AND Test Supervisor.

Clearance Tagouts will only be used when already in place for maintenance when a system's piping is opened for the test (e.g. vented to atmosphere), or for personnel safety.

Caution or Test Tagging if required is used sparingly to save time, and minimize demand on resources. Caution or Test Tags are information tags placed on valves/components moved from their NORMAL position for the ILRT (i.e. if the "Test Position" is the same as the component's normal position, a tag is not hung).

NO liquid filled penetrations are being vented/drained as part of this line-up.

Perform ATTACHMENT 3C in the order written for systems to be vented/opened to simplify proper venting of the system.

ATTACHMENT 3
ILRT VALVE LINEUP INSTRUCTIONS

Except in cases where a penetration will be vented, the lineup is organized (sorted) by location to facilitate its completion.

Most penetrations in Attachments 3A will NOT be vented, AND none in Attachment 3B. Their line-ups may be performed in any order, providing all piping is depressurized.

GENERAL INSTRUCTIONS:

IF a containment isolation valve in Penetrations that will be vented/tested by the ILRT (See Attachment 9) has NOT been closed via normal means THEN stroke valve prior to closure per the Line Up Checklist to demonstrate they were closed by their normal mode of force. Record any Containment Isolation Valve closure NOT by normal means in the Test Exception Log.

Lineups in Attachments 3A and 3B are suggested lineups, intended to disposition a penetration for the ILRT. These lineups may be modified if required with the concurrence of the ILRT Test Director and the Test Supervisor. Any variation from this lineup MUST be documented in Attachment 7, (Test Exception Log), AND testing status of the penetration reviewed and updated (if changed) in Attachment 9, (Containment Penetration Summary).

Modifications to component line-ups may be required during the preparations for the ILRT. Attachment 8, (Valve Lineup Alteration Log) will be used to track changes requested to a system/penetration lineup once signed off as completed for the ILRT. The component position MUST be returned to the "Test Position" prior to starting compressors or stabilization as appropriate (reviews are cued by the procedure). Any temporary valve lineup alteration that can NOT be restored prior to the test must be accepted by the ILRT Test Director, and be dispositioned as stated in the previous paragraph above via Test Exception Log.

ILRT "Test Position" may be verified through review of administrative controls documents (e.g. a completed Containment Integrity Checklist OR Equipment Tagout Log, Locked Valve Log, etc.) at the sole discretion of the Test Supervisor. Components verified through review or acceptance of administrative controls will be denoted with a printed "A" for "Admin." in the initials/date block to facilitate identification of verifications performed in this manner.

Component positions verified by Visual Verification will be initialed per normal practice. A Functional Verification will be documented as described in AI-500, Appendix 10.

Component position may also be accepted if the component is part of a Clearance that will remain in force throughout the ILRT window. In these cases the Test Supervisor will sign-on to the applicable Clearance.

FLANGES/PIPE CAPS:

The drain/vent flange and bolts may be left attached as long as flange is swung to the side. The bolts must be installed finger-tight so that flange can NOT block vent OR drain path during the ILRT.

ATTACHMENT 3
ILRT VALVE LINEUP INSTRUCTIONS

At completion of each Checklist all drain hoses need to be evaluated for removal. Determine if future activities need (scheduled clearance or maintenance) a drain hose.

Do NOT obstruct pipe vents/drains inside OR outside containment, this will invalidate the ILRT for this penetration.

DEFINITIONS:

Test Tag Closed. Position the valve in the closed position and attach a Test Tag at the appropriate location.

Test Tag Open. Position the valve in the open position and attach a Test Tag at the appropriate location.

ORC. Outside Reactor Containment

IRC. Inside Reactor Containment

PENETRATION RESTORATION CHECKLIST INSTRUCTIONS:

Components NOT returned to their AS FOUND condition shall be authorized by either the ILRT Test Supervisor OR CRS. Documentation for the reason the component was NOT returned to the AS FOUND condition shall be annotated or attached to the applicable Attachment.

72 Independent Verification of valve restoration may be "N/A" if the test lineup position is the same as the restored position.

72 Re-issue the lineup checklists for completion of penetration restoration to Operations and attach a copy of these instructions.

Except for portions of the lineup accomplished via clearance, the restoration may be signed off in any order. Restore vented/drained penetrations per Operations Lineup Coordinator/Clearance to prevent inadvertent release of fluids through the ILRT test boundary.

Instrument Air penetrations must be restored prior to restoring any penetrations containing AOVs.

Dispose of all In ILRT Information Tags, bags, etc. in the appropriate manner.

ATTACHMENT 3
ILRT VALVE LINEUP INSTRUCTIONS

L/U ATTACH.	SYSTEM	PEN#	PEN. DESCRIPTION	TEST STATUS	APP. J PRGM STATUS	L/U SEQ.	RESTORE SEQ.
3A	Main Steam	105	MSL A-2	Normal Standby L/U	N/R	N/A	N/A
3A	Main Steam	106	MSL A-1	Normal Standby L/U	N/R		
3A	Main Steam	107	MSL B-2	Normal Standby L/U	N/R		
3A	Main Steam	201	MSL B-1	Normal Standby L/U	N/R		
3A, 3B	Main Steam	314	RCSG 1-B Drain	Normal Standby L/U, Bottled Up for PI	N/R		
3B	Main Steam	316	RCSG 1-A Sec Vent	Normal Standby L/U	N/R		
3A, 3B	Main Steam	318	RCSG 1-A Drain	Normal Standby L/U, Bottled Up for PI	N/R		
3B	Main Steam	320	RCSG 1-B Sec Vent	Normal Standby L/U	N/R		
3B	Main Steam	427	RCSG 1-B Drain	Normal Standby L/U	N/R		
3B	Main Steam	428	RCSG 1-A Drain	Normal Standby L/U	N/R		
3A, 3B	Feedwater & Emerg. FW	108	Main FW "B"	Normal Standby L/U	N/R		
3A, 3B	Feedwater & Emerg. FW	109	EFW "B"	Normal Standby L/U	N/R		
3A, 3B	Feedwater & Emerg. FW	423	Main FW "A"	Normal Standby L/U	N/R		
3A, 3B	Feedwater & Emerg. FW	424	EFW "A"	Normal Standby L/U	N/R		

ATTACHMENT 3
ILRT VALVE LINEUP INSTRUCTIONS

L/U ATTACH.	SYSTEM	PEN#	PEN. DESCRIPTION	TEST STATUS	APP. J PRGM STATUS	L/U SEQ.	RESTORE SEQ.
3A, 3B	Condensate & Demin Water	117	Demin Wtr to CNTMNT	Take Penalty	Type C	N/A	N/A
3C	Instrument & Station Air	110	Station Air	ILRT is Testing	Type C		
3C	Instrument & Station Air	111	Instrument Air	ILRT is Testing	Type C		
3C	Instrument & Station Air	112	Instrument Air	ILRT is Testing	Type C		
3B	Nuclear Services Closed Cycle Cooling	321	Letdown Clr 3B Supply	Normal Standby L/U	N/R		
3B	Nuclear Services Closed Cycle Cooling	322	Letdown Clr 3B Return	Normal Standby L/U	N/R		
3B	Nuclear Services Closed Cycle Cooling	360	Letdown Clr 3A/3C Supply	Normal Standby L/U	N/R		
3B	Nuclear Services Closed Cycle Cooling	361	Letdown Clr 3A/3C Return	Normal Standby L/U	N/R		
3B	Nuclear Services Closed Cycle Cooling	330	CRDMS Supply	Normal Standby L/U	N/R		
3B	Nuclear Services Closed Cycle Cooling	331	CRDMS Return	Normal Standby L/U	N/R		
3B	Nuclear Services Closed Cycle Cooling	358	RB Vent Fan 3C Supply	Normal Standby L/U	N/R		
3B	Nuclear Services Closed Cycle Cooling	359	RB Vent Fan 3C Return	Normal Standby L/U	N/R		
3B	Nuclear Services Closed Cycle Cooling	368	RB Vent Fan 3A Supply	Normal Standby L/U	N/R		
3B	Nuclear Services Closed Cycle Cooling	369	RB Vent Fan 3A Return	Normal Standby L/U	N/R		
3B	Nuclear Services Closed Cycle Cooling	370	RB Vent Fan 3B Supply	Normal Standby L/U	N/R		
3B	Nuclear Services Closed Cycle Cooling	371	RB Vent Fan 3B Return	Normal Standby L/U	N/R		

ATTACHMENT 3
ILRT VALVE LINEUP INSTRUCTIONS

L/U ATTACH.	SYSTEM	PEN#	PEN. DESCRIPTION	TEST STATUS	APP. J PRGM STATUS	L/U SEQ.	RESTORE SEQ.
3B	Nuclear Services Closed Cycle Cooling	326	RCP 1C Return	Normal Standby L/U	N/R	N/A	N/A
3B	Nuclear Services Closed Cycle Cooling	325	RCP 1C Supply	Normal Standby L/U	N/R		
3B	Nuclear Services Closed Cycle Cooling	363	RCP 1D Return	Normal Standby L/U	N/R		
3B	Nuclear Services Closed Cycle Cooling	362	RCP 1D Supply	Normal Standby L/U	N/R		
3B	Nuclear Services Closed Cycle Cooling	324	RCP 1A Return	Normal Standby L/U	N/R		
3B	Nuclear Services Closed Cycle Cooling	323	RCP 1A Supply	Normal Standby L/U	N/R		
3B	Nuclear Services Closed Cycle Cooling	365	RCP 1B Return	Normal Standby L/U	N/R		
3B	Nuclear Services Closed Cycle Cooling	364	RCP 1B Supply	Normal Standby L/U	N/R		
3A, 3B	Spent Fuel Cooling	347	Fuel Trnsfr Clg Purification	Take Penalty	Type C		
3A	Spent Fuel Cooling	348	Fuel Transfer Tube	ILRT is Testing	Type B		
3A	Spent Fuel Cooling	436	Fuel Transfer Tube	ILRT is Testing	Type B		
3B	Decay Heat Removal	329	PZR Sprayline	Take Penalty	Type C		
OP L/U	Decay Heat Removal	345	RB Sump Recirc	Normal Standby L/U	N/R		
OP L/U	Decay Heat Removal	346	RB Sump Recirc	Normal Standby L/U	N/R		
3A	Reactor Coolant	N/A					
3B	Makeup & Purification	333	Letdown to Purif Demin	Take Penalty	Type C		

ATTACHMENT 3
ILRT VALVE LINEUP INSTRUCTIONS

L/U ATTACH.	SYSTEM	PEN#	PEN. DESCRIPTION	TEST STATUS	APP. J PRGM STATUS	L/U SEQ.	RESTORE SEQ.
3B	Makeup & Purification	353	HPI to RB Sump	Take Penalty	Type C	N/A	N/A
3A, 3B	Makeup & Purification	377	RCP Seal Bleedoff	Take Penalty	Type C		
3B	Makeup & Purification	338	RCP Seal Supply	Normal Standby L/U	N/R		
3B	Makeup & Purification	434	HPCI	Normal Standby L/U	N/R		
3B	Makeup & Purification	435	Makeup & HPCI	Normal Standby L/U	N/R		
3B	Makeup & Purification	336	HPCI	Normal Standby L/U	N/R		
3B	Makeup & Purification	337	HPCI	Normal Standby L/U	N/R		
3B	Liquid Sampling	425	PASS	Take Penalty	Type C		
3B	Liquid Sampling	439	PZR & RCS Sample	Take Penalty	Type C		
3B	Liquid Sampling	440	SG 3A Sample	Take Penalty	Type C		
3B	Liquid Sampling	441	SG 3B Sample	Take Penalty	Type C		
3C	Nitrogen	317	N2 to SG Secondary	Take Penalty	Type C		
3C	Nitrogen	355	N2 to RCS	Take Penalty	Type C		
3C	Nitrogen	372	N2 to RCDT	Take Penalty	Type C		
3C	Core Flood	123	N2 to CFT 1A	Take Penalty	Type C		
3C	Core Flood	124	N2 to CFT 1B	Take Penalty	Type C	✓	

ATTACHMENT 3
ILRT VALVE LINEUP INSTRUCTIONS

L/U ATTACH.	SYSTEM	PEN#	PEN. DESCRIPTION	TEST STATUS	APP. J PRGM STATUS	L/U SEQ.	RESTORE SEQ.
3A	Core Flood	350	CFT M/U	Take Penalty	Type C	N/A	N/A
3A	Core Flood	351	CFT Vent	Take Penalty	Type C		
3A, 3B	Core Flood	352	CFT Sample/Bleed	Take Penalty	Type C		
3B	Core Flood	373	CFT M/U	Take Penalty	Type C		
3B	Liquid Waste Disposal	339	RB Sump	Take Penalty	Type C		
3B	Liquid Waste Disposal	349	RCDT Vent	Take Penalty	Type C		
3B	Liquid Waste Disposal	374	RCDT Drain	Take Penalty	Type C		
3A, 3B	Gas Waste Disposal	354	RCS Equipment Vents	Take Penalty	Type C		
3C	Containment Monitoring	306	PASS	ILRT is Testing	Type C		
3C	Containment Monitoring	315	RB Air Sample	ILRT is Testing	Type C		
3C	Containment Monitoring	332	RB Air Sample Return	ILRT is Testing	Type C		
3C	Containment Monitoring	356	RB Air Sample	ILRT is Testing	Type C		
3C	Containment Monitoring	376	Cntmnt. Mon. Sample Return	ILRT is Testing	Type C		
3A, 3B	Reactor Building Spray	340	RB Spray	Normal Standby L/U	N/R		
3A, 3B	Reactor Building Spray	341	RB Spray	Normal Standby L/U	N/R		
3B	RB Press Sensing & Testing, IA	426	RB Press Sensing	ILRT is Testing	N/R		

ATTACHMENT 3
ILRT VALVE LINEUP INSTRUCTIONS

L/U ATTACH.	SYSTEM	PEN#	PEN. DESCRIPTION	TEST STATUS	APP. J PRGM STATUS	L/U SEQ.	RESTORE SEQ.
3B	RB Press Sensing & Testing, IA	442	RB Press Sensing	ILRT is Testing	N/R	N/A	N/A
3B	RB Press Sensing & Testing, IA	429	RB Press Sensing	ILRT is Testing	N/R		
3B	RB Press Sensing & Testing, IA	319	RB Press Sensing	ILRT is Testing	N/R		
3B	Leak Rate & Post Accident H2 Purge	116	RB Leak Rate	Take Penalty	Type C		
3B	Leak Rate & Post Accident H2 Purge	121	RB Leak Rate, H2 Recombiner	ILRT is Testing	Type C		
3B	Leak Rate & Post Accident H2 Purge	122	RB Leak Rate, H2 Recombiner	ILRT is Testing	Type C		
3B	Leak Rate & Post Accident H2 Purge	125	H2 Recombiner Return	ILRT is Testing	Type C		
3B	Leak Rate & Post Accident H2 Purge	202	RB Leak Rate	Take Penalty	Type C		
3B	Leak Rate & Post Accident H2 Purge	305	PASS	ILRT is Testing	Type C		
3B	Leak Rate & Post Accident H2 Purge	306	PASS	ILRT is Testing	Type C		
3A	Containment Purge	113	RB Purge Supply	ILRT is Testing	Type C		
3A	Containment Purge	357	RB Purge Exhaust	ILRT is Testing	Type C		
3A, 3B	Industrial Cooler	206	RBICW Supply	Take Penalty	Type C		
3A, 3B	Industrial Cooler	207	RBICW Return	Take Penalty	Type C		
3A, 3B	Industrial Cooler	366	RBICW Supply	Take Penalty	Type C		
3A, 3B	Industrial Cooler	367	RBICW Return	Take Penalty	Type C		

ATTACHMENT 3
ILRT VALVE LINEUP INSTRUCTIONS

L/U ATTACH.	SYSTEM	PEN#	PEN. DESCRIPTION	TEST STATUS	APP. J PRGM STATUS	L/U SEQ.	RESTORE SEQ.
3A, 3B	Fire Service	430	FSW to CNTMNT	ILRT is Testing	Type C	N/A	N/A
3A	RB Airlock	433	RB Personnel Airlock	Outer Door OPEN	Type B	↓	↓
3A	RB Airlock	222	RB Equipment Hatch Airlock	Outer Door OPEN	Type B	↓	↓

ATTACHMENT 3A
ILRT VALVE LINEUPS PRIOR TO PRESSURIZATION

SYSTEM: MAIN STEAM
PEN. NO.: 105,106,107,201,314,316,318,320,427,428

Dwg: FD-302-011 Sht.4

	VALVE NO.	VALVE DESCRIPTION	PEN #	LOCATION	TEST LINEUP	INITIAL/DATE	RESTORED POSITION	TAG PULLED INITIAL/DATE	IND. VERF. INIT/DATE
IB	MSV-297	Main Steam Line A2 Drain Trap Root Isolation	105	IB/119 Under MSV-411	CLOSED	A-93 11-17-05	OPEN		
MCB	MSV-411	Main Steam Line A2 Iso.	105	IB/119 (MCB)	CLOSED M	A-93	CLOSED	A-93	A-93
IB	MSV-299	Main Steam Line A1 Drain Trap Root Isolation	106	IB/119 Under MSV-412	CLOSED	A-93 11-17-05	OPEN		
IB	MSV-55	Main Steam Supply EFP-2 Iso.	106	IB/119 S/O MSV-411	CLOSED M	A-93 11-17-05	If RCS < 270° - CLOSED If RCS > 270° - OPEN	A-93	A-93 12-4-05
MCB	MSV-412	RCSG Main Steam Line A1 Iso.	106	IB/119 (MCB)	CLOSED M	A-93	CLOSED	A-93	A-93
IB	MSV-301	Main Steam Line B1 Drain Trap Root Isolation	201	IB/119 Under MSV-413	CLOSED	A-93 11-17-05	OPEN		
MCB	MSV-413	Main Steam Line B1 Iso.	201	IB/119 (MCB)	CLOSED M	A-93	CLOSED	A-93	A-93
IB	MSV-27	Atmo. Dump Isolation	106	IB/119 SE of MSV-411	CLOSED	A-93 11-17-05	If RCS < 240° - CLOSED If RCS > 240° - OPEN	A-93	A-93 12-4-05
IB	MSV-28	Atmo. Dump Isolation	107	IB/119 Adjacent MSV-26	CLOSED	A-93 11-17-05	If RCS < 240° - CLOSED If RCS > 240° - OPEN	A-93	A-93
IB	MSV-303	MSDT 25 Root Iso	107	IB/119 Under MSV-414	CLOSED	A-93	OPEN		
IB	MSV-56	Main Steam Supply EFP-2 Iso.	107	IB/119 15 FT SE LROC-1	CLOSED M	A-93 11-17-05	If RCS < 270° - CLOSED If RCS > 270° - OPEN	A-93	A-93 12-4-05
MCB	MSV-414	Main Steam Line B2 Iso.	107	IB/119 (MCB)	CLOSED M	A-93	CLOSED	A-93	A-93
RB-12	MSV-185	RCSG-1A Drain Iso.	318	RB/95 MSV Header	CLOSED	11-17-05	LOCKED CLOSED	11-5-05	11-5-05
	MSV-130	RCSG-1A Drain ~~Iso. Block~~	427	IB95 EFW Pump Room IN OVERHEAD	CLOSED M	A-93	CLOSED	A-93	A-93
	MSV-148	RCSG-1B Drain Iso.	428	IB 119 South of MCC-3A IN OVERHEAD	CLOSED M	A-93	CLOSED	A-93	A-93
	MSV-94	MS 107 + MS 109 PI Isolation	106	IB 119 South of MSV-411	OPEN	A-93 11-17-05	OPEN	A-93	A-93
	MSV-96	MS 110 + MS 112 PT Iso.	107	IB 119 South wall of IB	OPEN	A-93 11-17-05	OPEN	A-93	A-93

ATTACHMENT 3A
ILRT VALVE LINEUPS PRIOR TO PRESSURIZATION

SYSTEM: MAIN STEAM

PEN. NO.: 105,106,107,201,314,316,318,320,427,428 **Dwg: FD-302-011 Sht.4**

	VALVE NO.	VALVE DESCRIPTION	PEN.#	LOCATION	TEST LINEUP	INITIAL/DATE	RESTORED POSITION	TAG PULLED INITIAL/DATE	IND. VERF. INIT/DATE
	MSV-504	MS 107 + MS 109 PT Iso.	106	IB 119 South of MSV-411	OPEN	A-93 11-27-05	OPEN	A-93	A-93
	MSV-508	MS 110 + MS 112 PT Iso.	107	IB 119 South of LUDR-1	OPEN	A-93	OPEN	A-93	A-93
	MSV-505	Main Steam Line A1 Vent	106	IB 119 South of MSV-411	OPEN UNCAPPED (GAUGE INSTALLED)	~~A-93~~ AG 11-29-5	SEALED CLOSED CAPPED	12-5-05	12-5-05
	MSV-509	Main Steam Line B2 Vent	107	IB 119 South of LUDR-1	OPEN UNCAPPED (GAUGE INSTALLED)	AG 11-29-5	SEALED CLOSED CAPPED	12-5-05	12-5-05
RB-12	MSV-443	RCSG-1A Drain Iso.	318	RB/95 MSV Hdr	CLOSED	A-93	CLOSED	A-93	A-93
RB-12	MSV-120	RCSG-1A Drain Iso.	318	RB/95 MSV Hdr	CLOSED	A-93	CLOSED	A-93	A-93
RB-12	MSV-121	RCSG-1A Drain Iso.	318	RB/95 MSV Hdr	CLOSED	A-93	CLOSED	A-93	A-93
RB-1	MSV-446	RCSG-1B Drain Iso.	314	RB/95 Outside D-Ring	CLOSED	AG 11-28-5	CLOSED	~~A-93~~ 81	~~A-93~~ NA
RB-1	MSV-138	RCSG-1B Drain Iso.	314	RB/95 Outside D-Ring	CLOSED	AG 11-28-5	CLOSED	~~A-93~~ 81	~~A-93~~ NA
RB-1	MSV-139	RCSG-1B Drain Iso.	314	RB/95 Outside D-Ring	CLOSED	AG 11-28-5	CLOSED	~~A-93~~ 81	~~A-93~~ NA
RB-8	MSV-116	RCSG-1A Sec Vent	318	RB/162 A D-Ring	CLOSED	A-93	CLOSED	A-93	A-93
RB-8	MSV-117	N2 Supply to RCSG-1A	318	RB/162 A D-Ring	CLOSED	11-16-05	CLOSED	~~A-93~~ 81	~~A-93~~ NA
RB-1	MSV-400	Pen 318 Vent	318	RB/95 Outside D-Ring	CLOSED	11-16-05	CLOSED	~~A-93~~ 81	~~A-93~~ NA
RB-1	MSV-184	RCSG-1B to RB Sump Iso.	314	RB/95 Outside D-Ring	CLOSED Locked	AG 11-28-5	LOCKED CLOSED	12-5-05	12-5-05
RB-8	MSV-115	RCSG-1A Sec Vent	318	RB/162 A D-Ring	CLOSED	A-93	SEALED CLOSED	12-5-05	12-5-05
RB-4	MSV-447	Main Steam Line A2 Vent	105	RB/119 Outside D-Ring	CLOSED	11-16-5	SEALED CLOSED	12-5-05	12-5-05
RB-4	MSV-448	Main Steam Line A1 Vent	106	RB/119 Outside D-Ring	CLOSED	11-16-5	SEALED CLOSED	12-5-05	12-5-05
RB-4	MSV-449	Main Steam Line B1 Vent	201	RB/119 Outside D-Ring	CLOSED	11-16-5	CLOSED	~~A-93~~ 81	~~A-93~~ NA
RB-4	MSV-450	Main Steam Line B2 Vent	107	RB/119 Outside D-Ring	CLOSED	11-16-5	CLOSED	~~A-93~~ 81	~~A-93~~ NA
RB-9	MSV-134	N2 Supply to RCSG-1B	320	RB/162 B D-Ring	CLOSED	11-16-05	CLOSED	~~A-93~~ 81	~~A-93~~ NA

(81) Valve restoration SAME AS TEST LINEUP 12-4-05

ATTACHMENT 3A
ILRT VALVE LINEUPS PRIOR TO PRESSURIZATION

SYSTEM: MAIN STEAM

PEN. NO.: 105,106,107,201,314,316,318,320,427,428 **Dwg: FD-302-011 Sht.4**

	VALVE NO.	VALVE DESCRIPTION	PEN.#	LOCATION	TEST LINEUP	INITIAL/DATE	RESTORED POSITION	TAG PULLED INITIAL/DATE	IND. VERF. INIT/DATE
RB-9	MSV-135	N2 Supply to RCSG-1B	320	RB/162 6 O-Ring	CLOSED	(82) BJJ	SEALED CLOSED	12-5-05	05-05
RB-9	MSV-133	N2 Supply to RCSG-1B	320	RB/162 6 O-Ring	CLOSED	(82) BJJ	CLOSED	(82) 12-5-05	(82)
	MSV-503	MS 106 + MS 108 PT Vent	105	IB 119 SE of MSV-411	SEALED CLOSED & CAPPED	W 11-18-5	SEALED CLOSED & CAPPED	(81) 12-5-05	NA
	MSV-507	MS 111 + MS 113 PT Vent	201	IB 119 SOUTH WALL of IB	SEALED CLOSED & CAPPED	W 11-18-5	SEALED CLOSED & CAPPED	(81)	NA
	CGV-38	Main Steam Line A2 Drain	105	IB 119 UNDER MSV-411	LOCKED CLOSED	W 11-18-5	LOCKED CLOSED	(81)	NA
	CGV-37	Main Steam Line A1 Drain	106	IB 119 UNDER MSV-412	LOCKED CLOSED	W 11-18-5	LOCKED CLOSED	(81)	NA
	CGV-36	Main Steam Line B1 Drain	201	IB 119 UNDER MSV-413	LOCKED CLOSED	W 11-18-5	LOCKED CLOSED	(81)	NA
	CGV-35	Main Steam Line B2 Drain	107	IB 119 UNDER MSV-414	LOCKED CLOSED	W 11-18-5	LOCKED CLOSED	(81)	NA
RB-12	CGV-1	RCSG-1A Drain Iso To Chem Clng Sys	318	RB/95 MSV Hdr	SEALED CLOSED	11-18-05	SEALED CLOSED	(81)	NA

(82) closed per ~~SP~~ BJJ OP-202A. BJJ 11/28/05

ATTACHMENT 3A
ILRT VALVE LINEUPS PRIOR TO PRESSURIZATION

SYSTEM: FEEDWATER & EMERGENCY FEEDWATER
PEN. NO.: 108,109,423,424 **Dwg: FD-302-081, Shts 1, 3, & 4; FD-302-082 Sht 1**

	VALVE NO.	VALVE DESCRIPTION	PEN .#	LOCATION	TEST LINEUP	INITIAL/DATE	RESTORED POSITION	TAG PULLED INITIAL/DATE	IND. VERF. INIT/DATE
RB-8	FWV-135	RCSG-1A Emerg Supply Drain	424	RB/136 A O-Ring	CLOSED	11-16-05	SEALED CLOSED	12-5-05	12-5-05
RB-8	FWV-134	RCSG-1A Emerg Supply Vent	424	RB/136 A O-Ring	CLOSED	11-16-05	SEALED CLOSED	12-5-05	12-5-05
RB-8	FWV-169	RCSG-1A Main Supply Drain	423	RB/95 A O-Ring	CLOSED CAPPED	A-93	SEALED CLOSED & CAPPED	A-93	A-93
RB-4	FWV-85	RCSG-1A Main Supply Vent	423	RB/119 outside O-Ring	CLOSED	11.16.5	SEALED CLOSED	12-5-05	12-5-05
RB-9	FWV-136	RCSG-1B Emerg Supply Drain	109	RB/142 B O-Ring	CLOSED	11-16-05	SEALED CLOSED	12-5-05	12-5-05
RB-9	FWV-137	RCSG-1B Emerg Supply Vent	109	RB/142 B O-Ring	CLOSED	11-16-05	SEALED CLOSED	12-5-05	12-5-05
RB-4	FWV-86	RCSG-1B Main Supply Vent	108	RB/119 Outside O-Ring	CLOSED	11-16-05	CLOSED	12-5-05	12-5-05
RB-9	FWV-170	RCSG-1B Main Supply Drain	108	RB/95 B O-Ring	CLOSED & CAPPED	82	SEALED CLOSED & CAPPED	82	82

SYSTEM: CONDENSATE & DEMINERALIZED WATER
PEN. NO.: 117

	VALVE NO.	VALVE DESCRIPTION	PEN .#	LOCATION	TEST LINEUP	INITIAL/DATE	RESTORED POSITION	TAG PULLED INITIAL/DATE	IND. VERF. INIT/DATE
RB-1	DWV-161	Pen 117 Drain & Test	117	RB/95 Outside O-Ring	*CLOSED FLANGED	11-16-05	SEALED CLOSED & FLANGED	12-5-05	12-5-05

*If a test flange has been installed for venting/draining/testing, installation of the test flange cap or plug satisfies the test lineup flange installation requirement.

ATTACHMENT 3A
ILRT VALVE LINEUPS PRIOR TO PRESSURIZATION

SYSTEM: SPENT FUEL COOLING
PEN. NO.: 347, 348, 436 **Dwg: FD-302-621 Sht. 3**

	VALVE NO.	VALVE DESCRIPTION	PEN #	LOCATION	TEST LINEUP	INITIAL/DATE	RESTORED POSITION	TAG PULLED INITIAL/DATE	IND. VERF. INIT/DATE
RB-4	----	Transfer Tube Blind Flange, SFFG-436-2A	436	RB/119 FTC	INSTALLED	AB 12-2-05	INSTALLED	(81) AB 12-2-05	NA
RB-4	----	Transfer Tube Blind Flange, SFFG-348-2A	348	RB/119 FTC	INSTALLED	AB 12-2-05	INSTALLED	(81)	NA
RB-4	SFV-18	FTC Iso	347	RB/119 Outside D.Ring	CLOSED	(84) AB 12-2-05	LOCKED CLOSED	(84)	(84)

Check that pipe caps or plugs are installed on the following taps:

NOTE: **Refer to FPC Dwg. No. P-304-723 for location of Test Taps for Fuel Transfer Tube flanges.**

	INITIALS
Fuel Transfer Tube 3A Test Tap Inside RB	TRA
Fuel Transfer Tube 3B Test Tap Inside RB	TRA

(84) VERIFIED VIA OP. 301A STEP 4.9.7 11/30/05 AB 12-2-05

ATTACHMENT 3A
ILRT VALVE LINEUPS PRIOR TO PRESSURIZATION

SYSTEM: REACTOR COOLANT
PEN. NO.: N/A **Dwg: FD-302-651 Sht. 1**

	VALVE NO.	VALVE DESCRIPTION	PEN .#	LOCATION	TEST LINEUP	INITIAL/DATE	RESTORED POSITION	TAG PULLED INITIAL/DATE	IND. VERF. INIT/DATE
RB-16	RCV-6	Press N2 Supply/WD Vent	N/A	RB/152 NGV Hdr	CLOSED	11-28-05	~~OPEN~~ (85) CLOSED	12-5-05	12-5-05
MCB	RCV-157	High Point Vent	N/A	MCB	OPEN	12/2/5	CLOSED	12/2/5	12.5.5
RB-7	RCV-138	Press Vent	N/A	RB/180 Top of Pen	OPEN	(4-85)	LOCKED OPEN (1) (85B)		
MCB	RCV-158	High Point Vent	N/A	MCB	OPEN	12/2/5	CLOSED	12/2/5	12.5.5
MCB	RCV-159	High Point Vent	N/A	MCB	OPEN	12/2/5	CLOSED	12/2/5	12.5.5
RB-8	RCV-18	RCSG-1A N2 Supply/WD Vent	N/A	RB/180 A O-Ring	OPEN	(85)	LOCKED OPEN	12-5-05	12-5-05
MCB	RCV-160	High Point Vent	N/A	MCB	OPEN	12/2/5	CLOSED	12/2/5	12.5.5
MCB	RCV-163	High Point Vent	N/A	MCB	OPEN	12/2/5	CLOSED	12/2/5	12.5.5
MCB	RCV-164	High Point Vent	N/A	MCB	OPEN	12/2/5	CLOSED	12/2/5	12.5.5
RB-9	RCV-41	RCSG-1B N2 Supply/WD Vent	N/A	RB/162 B O-Ring	OPEN	(85)	LOCKED OPEN	12-5-05	12-5-05

(1) Normal High Dose area, consider alternate means to determine status of valve (camera, binoculars)

SYSTEM: MAKEUP & PURIFICATION
PEN. NO.:377 **Dwg: FD-302-661, Sheet 5**

	VALVE NO.	VALVE DESCRIPTION	PEN .#	LOCATION	TEST LINEUP	INITIAL/DATE	RESTORED POSITION	TAG PULLED INITIAL/DATE	IND. VERF. INIT/DATE
RB-4	MUV-418	Bleedoff Drain	377	RB/119 outside O-Ring	CLOSED & CAPPED	11.16.5	SEALED CLOSED & CAPPED	12-5-05	12-5-05
RB-4	MUV-407	Bleedoff Vent	377	RB/119 outside O-Ring	CLOSED & CAPPED	11/8/5	SEALED CLOSED & CAPPED	12-5-05	12-5-05

NOTE (A-85) - THESE VALVES POSITIONED IN OP-301A. 11-28-05 Ry Frosty 11/28/05

NOTE (85) - THESE VALVES POSITIONED IN SP-410 11-28-05 Ry Frosty 11/28/05

(85B) SEE NEXT PAGE OF 85 (85A). 12-5-5

ATTACHMENT 3A
ILRT VALVE LINEUPS PRIOR TO PRESSURIZATION

SYSTEM: REACTOR COOLANT
PEN. NO.: N/A
Dwg: FD-302-651 Sht. 1

VALVE NO.	VALVE DESCRIPTION	PEN .#	LOCATION	TEST LINEUP	INITIAL/DATE	RESTORED POSITION	TAG PULLED INITIAL/DATE	IND. VERF. INIT/DATE
RCV-6	Press N2 Supply/WD Vent	N/A		CLOSED		OPEN (85)	TR	✓
RCV-157	High Point Vent	N/A		OPEN		CLOSED (85D)		
RCV-138	Press Vent	N/A		OPEN		LOCKED OPEN (1)	TR	✓
RCV-158	High Point Vent	N/A		OPEN		CLOSED (85D)		
RCV-159	High Point Vent	N/A		OPEN		CLOSED (85D)		
RCV-18	RCSG-1A N2 Supply/WD Vent	N/A		OPEN		LOCKED OPEN	TR	✓
RCV-160	High Point Vent	N/A		OPEN		CLOSED (85D)		
RCV-163	High Point Vent	N/A		OPEN		CLOSED (85D)		
RCV-164	High Point Vent	N/A		OPEN		CLOSED (85D)		
RCV-41	RCSG-1B N2 Supply/WD Vent	N/A		OPEN		LOCKED OPEN	TR	✓

(1) Normal High Dose area, consider alternate means to determine status of valve (camera, binoculars)

SYSTEM: MAKEUP & PURIFICATION
PEN. NO.:377
Dwg: FD-302-661, Sheet 5

VALVE NO.	VALVE DESCRIPTION	PEN .#	LOCATION	TEST LINEUP	INITIAL/DATE	RESTORED POSITION	TAG PULLED INITIAL/DATE	IND. VERF. INIT/DATE
MUV-418	Bleedoff Drain	377		CLOSED & CAPPED		SEALED CLOSED & CAPPED	TR	✓
MUV-407	Bleedoff Vent	377		CLOSED & CAPPED		SEALED CLOSED & CAPPED	TR	✓

(85) Valve Required to be "CLOSED" per OP-301 A
C McKeown
12-5-05

(85D) See previous page 85. AB 12.5.5

85A

ATTACHMENT 3A
ILRT VALVE LINEUPS PRIOR TO PRESSURIZATION

SYSTEM: LIQUID WASTE DISPOSAL
PEN. NO.: 339,349,374 **Dwg.: FD-302-681 Sheet 6**

	VALVE NO.	VALVE DESCRIPTION	PEN .#	LOCATION	TEST LINEUP	INITIAL/DATE	RESTORED POSITION	TAG PULLED INITIAL/DATE	IND. VERF. INIT/DATE
MCB	WDV-60	RC Drain Tank Iso	349		CLOSED	12/3/05	CLOSED	81	NA
MCB	WDV-61	RC Drain Tank Iso	349		CLOSED	12/3/05	CLOSED	81	NA
MCB	WDV-94	RC Drain Tank Pump Iso	374		CLOSED	12/3/05	CLOSED	81	NA
MCB	WDV-62	RC Drain Tank Pump Iso	374		CLOSED	12/3/05	CLOSED	81	NA
	----	Waste Gas Header Aux Bldg Exhaust	OP-412A		OP-412A	12-2-05	OP-412A	81	NA

NOTE: Perform core flood lineup prior to performing gas waste disposal lineup.

SYSTEM: GAS WASTE DISPOSAL
PEN. NO.: 354 **Dwg.: FD-302-691 Sheet 3**

	VALVE NO.	VALVE DESCRIPTION	PEN .#	LOCATION	TEST LINEUP	INITIAL/DATE	RESTORED POSITION	TAG PULLED INITIAL/DATE	IND. VERF. INIT/DATE
MCB	WDV-406	RB Vent Header Iso	354		CLOSED	12/5/05	OPEN	12/5/05	12.5.5
MCB	WDV-405	RB Vent Header Iso	354		CLOSED	12/3/05	OPEN	12/5/05	12.5.5

SYSTEM: REACTOR BUILDING SPRAY
PEN. NO.: 340,341 **Drawing: FD-302-711 Sheet 1**

	VALVE NO.	VALVE DESCRIPTION	PEN .#	LOCATION	TEST LINEUP	INITIAL/DATE	RESTORED POSITION	TAG PULLED INITIAL/DATE	IND. VERF. INIT/DATE
AB-7	BSV-82	Pen 341 Drain & Test	341	AB/95 Triangle Rm	CLOSED	11-17-05	LOCKED CLOSED	12.5.5	12/5/5
MCB	BSV-4	RB Spray Header Iso	341	MCB	CLOSED	12/3/05	REMOTE/AUTO	C088581 TSS	12.5.05
AB-7	BSV-81	Pen 340 Drain & Test	340	AB/95 Triangle Rm	CLOSED	11-17-05	LOCKED CLOSED	12.5.5	12/5/5
MCB	BSV-3	RB Spray Header Iso	340	MCB	CLOSED	12/3/05	REMOTE/AUTO	C088581 TSS	12.5.05

ATTACHMENT 3A
ILRT VALVE LINEUPS PRIOR TO PRESSURIZATION

SYSTEM: LEAK RATE & POST ACCIDENT HYDROGEN PURGE
PEN. NO.: 116,121,122,125,202,305,306 **Drawing: FD-302-722, Sheet 1**

VALVE NO.	VALVE/COMPONENT DESCRIPTION	PEN .#	LOCATION	TEST LINEUP	INITIAL/DATE	RESTORED POSITION	TAG PULLED INITIAL/DATE	IND. VERF. INIT/DATE
LRV-42	PI-1 Test	202		CLOSED & CAPPED		CLOSED & CAPPED	AG 12.5.5	SB 12/5/05
LRV-43	PI-2 Test	202		CLOSED & CAPPED		CLOSED & CAPPED	AG 12.5.5	SB 12/5/05
LRV-44	Press Sensing Inlet	202		UNLOCKED OPEN		LOCKED CLOSED	AG 12.5.5	SB 12/5/05
LRV-39	PI-1 Inlet	202		OPEN		CLOSED	AG 12.5.5	SB 12/5/05
LRV-40	PI-2 Inlet	202		OPEN		CLOSED	AG 12.5.5	SB 12/5/05
LRV-41	PI-3 Inlet	202		OPEN		CLOSED	AG 12.5.5	SB 12/5/05
LRV-45	FI-4 & FI-5 Inlet	116		UNLOCKED CLOSED		LOCKED CLOSED		
LRV-115	Test & Drain	202		CLOSED & CAPPED		SEALED CLOSED & CAPPED		
LRV-116	Test & Drain	116		CLOSED & CAPPED		SEALED CLOSED & CAPPED		
LRV-117	Test & Drain	116		CLOSED		SEALED CLOSED		
LRV-118	Test & Drain	116		SEALED CLOSED & CAPPED		SEALED CLOSED & CAPPED		
LRV-130	Test Conn Pent 216	216		CLOSED & CAPPED		SEALED CLOSED & CAPPED		
LRV-131	Test Conn Pent 217	217		CLOSED & CAPPED		SEALED CLOSED & CAPPED		
LRFG-1-1B	LRX-1 (Line Blind)	122		INSTALLED		INSTALLED		
LRFG-122-2A	Atmos. Vent inside RB 8" Flange	122		REMOVED		REMOVED		
LRFG-121-2A	FMR Pressurization Line 8" Flange	121		REMOVED		REMOVED		
LRFG-125-2A	Tertiary Depress Path 8" Flange	125		REMOVED		REMOVED		
LRFG-202-2A	ILRT Pressure Sensing, 2" Flange/Blind	202		REMOVED		INSTALLED		

ATTACHMENT 3A
ILRT VALVE LINEUPS PRIOR TO PRESSURIZATION

SYSTEM: LEAK RATE & POST ACCIDENT HYDROGEN PURGE
PEN. NO.: 116,121,122,125,202,305,306 **Drawing: FD-302-722, Sheet 1**

VALVE NO.	VALVE/COMPONENT DESCRIPTION	PEN .#	LOCATION	TEST LINEUP	INITIAL/DATE	RESTORED POSITION	TAG PULLED INITIAL/DATE	IND. VERF. INIT/DATE
LRV-42	PI-1 Test	202		CLOSED & CAPPED		CLOSED & CAPPED		
LRV-43	PI-2 Test	202		CLOSED & CAPPED		CLOSED & CAPPED		
LRV-44	Press Sensing Inlet	202		UNLOCKED OPEN		LOCKED CLOSED		
LRV-39	PI-1 Inlet	202		OPEN		CLOSED		
LRV-40	PI-2 Inlet	202		OPEN		CLOSED		
LRV-41	PI-3 Inlet	202		OPEN		CLOSED		
LRV-45	FI-4 & FI-5 Inlet	116		UNLOCKED CLOSED		LOCKED CLOSED	AG 12-5-5	W 12-5-5
LRV-115	Test & Drain	202		CLOSED & CAPPED		SEALED CLOSED & CAPPED		
LRV-116	Test & Drain	116		CLOSED & CAPPED		SEALED CLOSED & CAPPED		
LRV-117	Test & Drain	116		CLOSED		SEALED CLOSED		
LRV-118	Test & Drain	116		SEALED CLOSED & CAPPED		SEALED CLOSED & CAPPED		
LRV-130	Test Conn Pent 216	216		CLOSED & CAPPED		SEALED CLOSED & CAPPED		
LRV-131	Test Conn Pent 217	217		CLOSED & CAPPED		SEALED CLOSED & CAPPED		
LRFG-1-1B	LRX-1 (Line Blind)	122		INSTALLED		INSTALLED		
LRFG-122-2A	Atmos. Vent inside RB 8" Flange	122		REMOVED		REMOVED		
LRFG-121-2A	FMR Pressurization Line 8" Flange	121		REMOVED		REMOVED		
LRFG-125-2A	Tertiary Depress Path 8" Flange	125		REMOVED		REMOVED		
LRFG-202-2A	ILRT Pressure Sensing, 2" Flange/Blind	202		REMOVED		INSTALLED		

87C

ATTACHMENT 3A
ILRT VALVE LINEUPS PRIOR TO PRESSURIZATION

SYSTEM: LEAK RATE & POST ACCIDENT HYDROGEN PURGE
PEN. NO.: 116,121,122,125,202,305,306 **Drawing: FD-302-722, Sheet 1**

VALVE NO.	VALVE/COMPONENT DESCRIPTION	PEN .#	LOCATION	TEST LINEUP	INITIAL/DATE	RESTORED POSITION	TAG PULLED INITIAL/DATE	IND. VERF. INIT/DATE
LRV-42	PI-1 Test	202	IB 119 IN LEAK RATE TEST CAB	CLOSED & CAPPED	12/2/5	CLOSED & CAPPED	(81) 12-5-5	NA
LRV-43	PI-2 Test	202	IB 119 IN LEAK RATE TEST CAB	CLOSED & CAPPED	A6 11-18-5	CLOSED & CAPPED	(81) 12-5-5	NA
need comp log when opened → LRV-44	Press Sensing Inlet	202	IB 119 SW RB PENETRATION ALLEY	UNLOCKED OPEN	12/2/5	LOCKED CLOSED (87D)		
LRV-39	~~PI-1~~ Inlet LR-1-PI	202	IB 119 IN LEAK RATE TEST CAB	OPEN	(87)	CLOSED		10/5/05
LRV-40	~~PI-2~~ Inlet LR-2-PI	202	IB 119 IN LEAK RATE TEST CAB	OPEN	(87)	CLOSED		10/5/05
LRV-41	~~PI-3~~ Inlet LR-3-PI	202	IB 119 IN LEAK RATE TEST CAB	OPEN	11-28-05	CLOSED		12/2/05
LRV-45	FI-4 & FI-5 Inlet	116	IB 119 SOUTH OF PRESSURIZER HEATER MCC 3A	UNLOCKED CLOSED	12/2/5	LOCKED CLOSED		
LRV-115	Test & Drain	202	IB 119 SW RB PENETRATION ALLEY	CLOSED & CAPPED Sealed	A6 11-18-5	SEALED CLOSED & CAPPED		12/5/05
LRV-116	Test & Drain	116	IB 119 SOUTH OF PRESSURIZER HEATER MCC 3A IN OVERHEAD	CLOSED & CAPPED Sealed	A6 11-18-5	SEALED CLOSED & CAPPED		
LRV-117	Test & Drain	116	IB 119 SOUTH OF PRESSURIZER HEATER MCC 3A IN OVERHEAD	CLOSED Sealed	A6 11-18-5	SEALED CLOSED		
LRV-118	Test & Drain	116	IB 119 SOUTH OF PRESSURIZER HEATER MCC 3A IN OVERHEAD	SEALED CLOSED & CAPPED	A6 11-18-5	SEALED CLOSED & CAPPED	(81) 12-5-5	NA
LRV-130	Test Conn Pent 216	216	IB 119 SW RB PENETRATION ALLEY	CLOSED & CAPPED Sealed	A6 11-18-5	SEALED CLOSED & CAPPED		
LRV-131	Test Conn Pent 217	217	IB 119 SW RB PENETRATION ALLEY	CLOSED & CAPPED Sealed	A6 11-18-5	SEALED CLOSED & CAPPED		
LRFG-1-1B	LRX-1 (Line Blind)	122	IB119	INSTALLED	A6 11-29-5	INSTALLED	(81) 12-5-5	NA
LRFG-122-2A	Atmos. Vent inside RB 8" Flange	122	119 RB by elevator	REMOVED	A6 11-28-5	REMOVED	(81)	NA
LRFG-121-2A	FMR Pressurization Line 8" Flange	121	119 RB by elevator	REMOVED	A6 11-28-5	REMOVED	(81)	NA
LRFG-125-2A	Tertiary Depress Path 8" Flange	125	119' RB ~~NEAR~~ AHF-1A	REMOVED	11-29-05	REMOVED	(81)	NA
LRFG-202-2A	ILRT Pressure Sensing, 2" Flange/Blind	202	124' RB NEAR EQUIPEMENT HATCH	REMOVED	11-29-05	INSTALLED	12-5-05	12-5-05

(87D) ~~See~~ 12-5-5 See next page 87(87A). 12-5-5

(87) Test instruments are alligned to LRV-41. 12/02/05

ATTACHMENT 3A
ILRT VALVE LINEUPS PRIOR TO PRESSURIZATION

SYSTEM: LEAK RATE & POST ACCIDENT HYDROGEN PURGE

PEN. NO.: 116,121,122,125,202,305,306 **Drawing: FD-302-722, Sheet 1**

VALVE NO.	VALVE/COMPONENT DESCRIPTION	PEN #	LOCATION	TEST LINEUP	INITIAL/DATE	RESTORED POSITION	TAG PULLED INITIAL/DATE	IND. VERF. INIT/DATE
LRFG-116-2A	ILRT Verification Test Flow Line, 2" Flange	116	INSIDE RB NEAR ELEVATOR	REMOVED	11-28-05	REMOVED	12-4-05	NA
LRFG-305-2B	Mini-Purge, 6" Flange	305	ON PLATFORM FOR AHV-1B (RB)	REMOVED	11-28-05	REMOVED		NA
LRFG-306-2B	Mini-Purge, 6" Flange	306	ON PLATFORM FOR AHV-1B (RB)	REMOVED	11-28-05	REMOVED		NA
LRFG-216-2C	2005 ILRT Pressurization Path 12" Flange/Blind	216		REMOVED	12/3/05	INSTALLED	12-5-05	12-5-05
LRFG-217-2C	2005 ILRT Pressurization Path 12" Flange/Blind	217		REMOVED	12/3/05	INSTALLED	12-5-05	12-5-05

ATTACHMENT 3A
ILRT VALVE LINEUPS PRIOR TO PRESSURIZATION

SYSTEM: CONTAINMENT PURGE
PEN. NO.: 113,357 **Drawing: FD-302-751, Sheet 1**

	VALVE NO.	VALVE DESCRIPTION	PEN .#	LOCATION	TEST LINEUP	INITIAL/DATE	RESTORED POSITION	TAG PULLED INITIAL/DATE	IND. VERF. INIT/DATE
MCB	AHV-1A	Purge Exhaust	357	MCB	CLOSED	12/3/05	*OPEN/CLOSED		NA
MCB	AHV-1B	Purge Exhaust	357	MCB	CLOSED	12/3/05	*OPEN/CLOSED		NA
MCB	AHV-1C	Purge Supply	113	MCB	CLOSED	11.28.5	*OPEN/CLOSED		NA
MCB	AHV-1D	Purge Supply	113	MCB	CLOSED	11.28.5	*OPEN/CLOSED		NA
AB-32	AHV-25	Test Connection AHV-1A & AHV-1B	357	AB/143 AB Purge Valve Alley	OPEN, UNCAPPED GAUGE IS INSTALLED	12.3.5	SEALED CLOSED & CAPPED	12-5-05	12-5-05
IB	AHV-24	Test Connection AHV-1D & AHV-1C	113	119 IB WEST SIDE	OPEN, UNCAPPED GAUGE INSTALLED	11.29.5	SEALED CLOSED & CAPPED	12-5-05	12-5-05

*Open only for RB Purge per OP-417. Shall not be open in Modes 1 thru 4.

ATTACHMENT 3A
ILRT VALVE LINEUPS PRIOR TO PRESSURIZATION

SYSTEM: INDUSTRIAL COOLER
PEN. NO.: 206,207,366,367 **Drawing: FD-302-762 Sheet 4**

	VALVE NO.	VALVE DESCRIPTION	PEN #	LOCATION	TEST LINEUP	INITIAL/DATE	RESTORED POSITION	TAG PULLED INITIAL/DATE	IND. VERF. INIT/DATE
MCB	CIV-35	Outlet Iso	367	MCB	CLOSED	M 12/2/5	*OPEN/CLOSED	TBS 12-5-05	M 12/5
RB-1	CIV-97	AHHE-14A Drain	367	RB/95 Outside O-Ring	CLOSED	DG 11-28-5	SEALED CLOSED	TB 12-5-05	12-5-05
RB-1	CIV-90	AHHE-14A Vent	367	RB/119 Outside O-Ring	CLOSED	DG 11-28-5	SEALED CLOSED	TB 12-5-05	12-5-05
RB-1	CIV-98	AHHE-14A Drain	366	RB/95 Outside O-Ring	CLOSED	DG 11-28-5	SEALED CLOSED	TB 12-5-05	12-5-05
MCB	CIV-34	Inlet Iso	366	MCB	CLOSED	M 12/2/5	*OPEN/CLOSED	TBS 12-5-05	M 12/5
MCB	CIV-40	Outlet Iso	207	MCB	CLOSED	M 12/2/5	*OPEN/CLOSED	TBS 12-5-05	M 12/5
RB-1	CIV-95	AHHE-14B Drain	207	RB/95 Outside O-Ring	CLOSED	TB 11-16-05	SEALED CLOSED	TB 12-5-05	12-5-05
RB-1	CIV-91	AHHE-14B Vent	206	RB/119 Outside O-Ring	CLOSED	11-16-5	SEALED CLOSED	TB 12-5-05	12-5-05
RB-1	CIV-96	AHHE-14B Drain	206	RB/95 Outside O-Ring	CLOSED	TB 11-16-05	SEALED CLOSED	TB 12-5-05	12-5-05
MCB	CIV-41	Inlet Iso	206	MCB	CLOSED	M 12/2/5	*OPEN/CLOSED	TBS 12-5-05	M 12/5

*Open if associated cavity pump is in service.

ATTACHMENT 3A
ILRT VALVE LINEUPS PRIOR TO PRESSURIZATION

SYSTEM: REACTOR BUILDING AIRLOCKS
PEN NO.: N/A

VALVE NO.	VALVE DESCRIPTION	PEN .#	LOCATION	TEST LINEUP	INITIAL/DATE	RESTORED POSITION	TAG PULLED INITIAL/DATE	IND. VERIF. INITIAL/DATE
RAX-1	Inner Door	433		CLOSED	12.3.5	CLOSED	12-2-05	NA
RAX-1	Outer Door	433		OPEN	12.3.5	CLOSED	12-5-05	12-5-05
RAX-2	Inner Door	222		CLOSED	12-3-05	CLOSED	12-2-05	NA
RAX-2	Outer Door	222		OPEN	12-3-05	CLOSED	12-5-05	12-5-05

* Outer Door can be closed, and airlock pressurized to test pressure -0.5 psig if snooping inner door seals/equalizing valves (handwheel packing glands indicates leakage.

ATTACHMENT 3B
ILRT VALVE LINEUPS PRIOR TO STABILIZATION

SYSTEM: MAIN STEAM

PEN. NO.: 105,106,107,201,314,316,318,320,427,428

Dwg: FD-302-011 Sht.4

	VALVE NO.	VALVE DESCRIPTION	PEN #	LOCATION	TEST LINEUP	INITIAL/DATE	RESTORED POSITION	TAG PULLED INITIAL/DATE	IND. VERF. INIT/DATE
AB-25	MSV-409	Drain & Test Pen 316	316	AB/119 RM-A6 Area	CLOSED & CAPPED	A-93	* OPEN / OR SEALED CLOSED & CAPPED	A-93	A-93 12-4-5
AB-25	MSV-114	RCSG-1A Sec Vent	316	AB/119 RM-A6 area	LOCKED CLOSED	A-93	LOCKED CLOSED	A-93	A-93
AB-25	MSV-410	RCSG-1B Test & Drain	320	AB/119 RM-A6 area	CLOSED & CAPPED	A-93	* OPEN / OR SEALED CLOSED & CAPPED	A-93	A-93
AB-25	MSV-132	RCSG-1B Sec Vent	320	AB/119 RM-A6	LOCKED CLOSED	A-93	LOCKED CLOSED	A-93	A-93
AB-7	MSV-401	Drain & Test Pen 318	318	AB/95 Triangle Area	CLOSED & CAPPED	11-17-05	SEALED CLOSED & CAPPED	12-5-5	12/5/5
AB-7	MSV-128	RCSG-1B Drain To Misc Waste Tank	318	AB/95 Triangle Area	LOCKED CLOSED	11-17-05	LOCKED CLOSED	84 12-5-5	NA
	MSV-403	RCSG-1A To Atmos Drain Tank Vent	427	IB/95 NEAR CAV-2	SEALED CLOSED & CAPPED	11-17-05	SEALED CLOSED & CAPPED	84 12-4-5	NA
AB-7	MSV-404	Drain & Test Pen 314	314	AB/95 Triangle Area	CLOSED & CAPPED	11-17-05	SEALED CLOSED & CAPPED	12-5-5	12/5/5
AB-7	MSV-146	RCSG-1B Drain To Misc Waste Tank	314	AB/95 Triangle Area	LOCKED CLOSED	11-17-05	LOCKED CLOSED	84 12-4-5	NA
	MSV-406	RCSG-1B To Atmos Drain Tank Vent	428	IB/119 South OF VENT OVERHEAD MCC-3A	SEALED CLOSED & CAPPED	A-93	SEALED CLOSED & CAPPED	A-93 84 12-4-5	NA A-93
	MSV-405	Drain & Test Pen 428	428	IB/119 South OF Vent MCC3A OVHD	CLOSED & CAPPED	A-93	SEALED CLOSED & CAPPED	12-5-05	12-5-05
	MSV-402	Drain & Test Pen 427	427	IB/95 Near CAV-2 valve alley doorway	SEALED CLOSED & CAPPED	11-17-05	SEALED CLOSED & CAPPED	A-93 84 12-4-5	NA A-93

* OPEN if N2 Required on OTSG

ATTACHMENT 3B
ILRT VALVE LINEUPS PRIOR TO STABILIZATION

SYSTEM: FEEDWATER & EMERGENCY FEEDWATER

PEN. NO.: 108,109,423,424 **Dwgs: FD-302-081 Sht.s 1, 3, & 4; FD-302-082 Sht. 1**

VALVE NO.	VALVE DESCRIPTION	PEN #	LOCATION	TEST LINEUP	INITIAL/DATE	RESTORED POSITION	TAG PULLED INITIAL/DATE	IND. VERF. INIT/DATE
FWV-138	~~Pen 109 Drain & Test~~ FEEDWATER TO RCSG-1B TEST + DRAIN	109	IB 95 NW OF EFP-1 IN OVHD NEAR WEST WALL	SEALED CLOSED	11-17-05	SEALED CLOSED	(8)	NA
FWV-163	~~RCSG-1B Main Supply Vent~~ FEEDWATER TO RCSG-1B DRAIN	108	IB 119 SOUTH OF EYEWASH TANK	CLOSED	(A-93)	CLOSED	(A-93)	(A-93)
EFV-69	~~EFW~~ RCSG-1A Vent EFV-11 TO LINE	424	IB 119 SOUTH OF MTMC-8	CLOSED	(A-93)	CLOSED	(8)	NA
FWV-132	Drain & Test Pen 424	424		CLOSED & CAPPED	11-17-05	SEALED CLOSED & CAPPED	12-5-05	12-5-05
FWV-171	Drain & Test Pen 423 FEEDWATER TO RCSG-1A DRAIN	423	IB 119 SOUTH OF MTMC-10	CLOSED & CAPPED	(A-93)	SEALED CLOSED & CAPPED	(A-93)	(A-93)
FWV-111	Drain & Test Pen 108 PENETRATION # 108 FEEDWATER HEADER DRAIN	108	IB 119 SOUTH OF EYEWASH TANK	CLOSED & CAPPED	(A-93)	SEALED CLOSED & CAPPED	12-5-05	12-5-05
FWV-112	Drain & Test Pen 423	423	IB119 IN OVHD SOUTH OF MTMC-10	CLOSED	(A-93)	CLOSED	(A-93)	(A-93)
FWV-205	~~Drain & Test Pen 424~~ FWV-44 TEST CONNECTION ISOLATION	424	IB95 ABOVE 3A3 CABINET	CLOSED & CAPPED	11-17-05	SEALED CLOSED & CAPPED	12-5-05	12-5-05
FWV-206	~~Pen 424 Vent~~ FWV-44 TEST CONNECTION ISOLATION	424	IB95 ABOVE 3B3 CABINET	CLOSED & CAPPED	11-17-05	SEALED CLOSED & CAPPED	12-5-05	12-5-05
FWV-203	~~Drain & Test Pen 109~~ FWV-43 TEST CONNECTION ISOLATION	109	IB95 NW OF EFP-1 IN OVHD	CLOSED & CAPPED	11-17-05	SEALED CLOSED & CAPPED	12-5-05	12-5-05
FWV-204	~~Pen 109 Vent~~ FWV-43 TEST CONNECTION ISOLATION	109	IB95 NW OF EFP-1 IN OVHD	CLOSED & CAPPED	11-17-05	SEALED CLOSED & CAPPED	12-5-05	12-5-05
CGV-17	~~Chem Clean A OTSG~~ RCSG-1A WET LAYUP INLET TO 6 INCH FW HEADER ISO.	424	IB 95 OVER EFP-2 IN OVHD ABOVE GRATING	SEALED CLOSED	11-17-05	SEALED CLOSED	(8)	NA
CGV-18	~~Chem Clean B OTSG~~ RCSG-1B WET LAYUP INLET TO 6 INCH FW HEADER ISO.	109	EFW PUMP ROOM OVER EFP-2 IN OVHD ABOVE GRATING	SEALED CLOSED	(A-93)	SEALED CLOSED	(A-93)	(A-93)
EFV-68	Vent & N_2 Blanket Iso.	424	IB 95 EAST OF EFP-1 IN OVHD	CLOSED	11-17-05	SEALED CLOSED	12-5-05	12-5-05
EFV-72	~~EF to SG 3A Drain~~ EFV-11 TO EFV-55 LINE DRAIN	424	IB 95 EAST OF PAX PHONE	CLOSED	11-17-05	CLOSED	(8)	NA
EFV-62	EF to SG 3B Drain EFV-33 TO EFV-55 LINE DRAIN	109	IB 95 SOUTH OF EFP-2	CLOSED	11-17-05	CLOSED	(8)	NA
EFV-65	EF to SG 3B Drain EFV-32 TO EFV-33 LINE DRAIN	109	IB 95 EAST OF PAX PHONE	CLOSED	11-17-05	CLOSED	(8)	NA
EFV-61	Vent & N_2 Blanket Iso.	109	IB 95 SW OF PAX PHONE IN OVHD	CLOSED	11-17-05	SEALED CLOSED	12-5-05	12-5-05
MLB EFV-11	Emer FW to OTSG 3A Iso. EFP-2 TO RCSG-1A ISOLATION	424	IB 95 NORTH OF PAX PHONE	CLOSED	12/3	AUTO	12/5/05	12/5/05
MLB EFV-14	Emer FW to OTSG 3A Iso. EFP-1 TO RCSG-1A ISOLATION	424	IB 95 EAST OF EFP-1	CLOSED	12/3	AUTO	12/5/05	12/5/05
MLB EFV-32	Emer FW to OTSG 3B EFP-2 TO RCSG-1B ISOLATION	109	IB 95 NORTH OF PAX PHONE	CLOSED	12/3	AUTO	12/5/05	12/5/05

(A-93) Valve alignment performed on QI-202A, Enclosure 9 dated 11/23/05. AS 11/28/05

ATTACHMENT 3B
ILRT VALVE LINEUPS PRIOR TO STABILIZATION

SYSTEM: FEEDWATER & EMERGENCY FEEDWATER
PEN. NO.: 108,109,423,424 **Dwgs: FD-302-081 Sht.s 1, 3, & 4; FD-302-082 Sht. 1**

VALVE NO.	VALVE DESCRIPTION	PEN #	LOCATION	TEST LINEUP	INITIAL/DATE	RESTORED POSITION	TAG PULLED INITIAL/DATE	IND. VERF. INIT/DATE
	Iso.							
MCB EFV-33	Emer FW to OTSG 3B Iso. EFP-1 TO RCS4-1B ISOLATION	109	IB 95 SOUTH OF EFP-1	CLOSED	[illegible]	AUTO	[illegible] 12/5/05	[illegible] 12/5/05

SYSTEM: CONDENSATE & DEMINERALIZED WATER
PEN. NO.: 117 **Dwg.: FD-302-182 Sht. 3**

VALVE NO.	VALVE DESCRIPTION	PEN #	LOCATION	TEST LINEUP	INITIAL/DATE	RESTORED POSITION	TAG PULLED INITIAL/DATE	IND. VERF. INIT/DATE
MCB DWV-160	Demin Water Iso	117	IB 95 EFW PUMP ROOM	CLOSED	[illegible] 12/9/05	CLOSED	[illegible]	NA

ATTACHMENT 3B
ILRT VALVE LINEUPS PRIOR TO STABILIZATION

SYSTEM: NUCLEAR SERVICES CLOSED CYCLE COOLING

PEN. NO.: 321,322,360,361,330,331,358,359,368,369,370,371,326,325,363,362,324,323,365,364 **Dwg: FD-302-601 Sht. 5**

MCB

VALVE NO.	VALVE DESCRIPTION	PEN #	LOCATION	TEST LINEUP	INITIAL/DATE	RESTORED POSITION	TAG PULLED INITIAL/DATE	IND. VERF. INIT/DATE
SWV-50	Letdown Clr 3A/3C Return Iso	361	AB 95 TRIANGLE ROOM IN OVERHEAD	CLOSED	12/3/05	OPEN	TSS 12.5.05	12/5/05
SWV-49	Letdown Cooler 3B Return Iso	322	AB 95 TRIANGLE ROOM IN OVERHEAD	CLOSED	12/3/05	OPEN	TSS 12.5.05	12/5/05
SWV-48	Letdown Cooler 3B Supply Iso	321	AB 95 TRIANGLE ROOM IN OVERHEAD	CLOSED	12/3/05	OPEN	TSS 12.5.05	12/5/05
SWV-47	Letdown Clr 3A/3C Supply Iso	360	AB 95 TRIANGLE ROOM IN OVERHEAD	CLOSED	12/3/05	OPEN	TSS 12.5.05	12/5/05
SWV-109	CRDMS Supply Iso	330	AB 119 WEST SIDE RM-A6 AREA	CLOSED	12/3/05	OPEN	TSS 12.5.05	12/5/05
SWV-110	CRDMS Return Iso	331	AB 119 WEST SIDE RM-A6 AREA	CLOSED	12/3/05	OPEN	TSS 12.5.05	12/5/05
SWV-86	RCP-1C Return Iso	326	AB 119 RM-A6 AREA	CLOSED	12/3/05	OPEN	TSS 12.5.05	12/5/05
SWV-82	RCP-1C Supply Iso	325	AB 119 RM-A6 AREA	CLOSED	12/3/05	OPEN	TSS 12.5.05	12/5/05
SWV-85	RCP-1D Return Iso	363	AB 119 RM-A6 AREA	CLOSED	12/3/05	OPEN	TSS 12.5.05	12/5/05
SWV-81	RCP-1D Supply Iso	362	AB 119 RM-A6 AREA	CLOSED	12/3/05	OPEN	TSS 12.5.05	12/5/05
SWV-84	RCP-1A Return Iso	324	AB 119 RM-A6 AREA	CLOSED	12/3/05	OPEN	TSS 12.5.05	12/5/05
SWV-80	RCP-1A Supply Iso	323	AB 119 RM-A6 AREA	CLOSED	12/3/05	OPEN	TSS 12.5.05	12/5/05
SWV-83	RCP-1B Return Iso	365	AB 119 RM-A6 AREA	CLOSED	12/3/05	OPEN	TSS 12.5.05	12/5/05
SWV-79	RCP-1B Supply Iso	364	AB 119 RM-A6 AREA	CLOSED	12/3/05	OPEN	TSS 12.5.05	12/5/05
SWV-35	RB Vent Fan 3A Supply Iso	368	AB 119 RM-A6 AREA	CLOSED	12/3/05	OPEN	TSS 12.5.05	12/5/05
SWV-41	RB Vent Fan 3A Return Iso	369	AB 95 TRIANGLE ROOM IN OVERHEAD	CLOSED	12/3/05	*OPEN/CLOSED	TSS 12.5.05	12/5/05
SWV-37	RB Vent Fan 3B Supply Iso	370	AB 95 TRIANGLE ROOM IN OVERHEAD	CLOSED	12/3/05	OPEN	TSS 12.5.05	12/5/05
SWV-43	RB Vent Fan 3B Return Iso	371	AB 95 TRIANGLE ROOM IN OVERHEAD	CLOSED	12/3/05	*OPEN/CLOSED	TSS 12.5.05	12/5/05
SWV-39	RB Vent Fan 3C Supply Iso	358	AB 95 TRIANGLE ROOM IN OVERHEAD	CLOSED	12/3/05	OPEN	TSS 12.5.05	12/5/05
SWV-45	RB Vent Fan 3C Return Iso	359	AB 95 TRIANGLE ROOM IN OVERHEAD	CLOSED	12/3/05	*OPEN/CLOSED	TSS 12.5.05	12/5/05

*Valve must be open when associated fan is running.

ATTACHMENT 3B
ILRT VALVE LINEUPS PRIOR TO STABILIZATION

SYSTEM: SPENT FUEL COOLING
PEN. NO.: 347, 348, 436

Dwg: FD-302-621 Sht. 3

	VALVE NO.	VALVE DESCRIPTION	PEN #	LOCATION	TEST LINEUP	INITIAL/DATE	RESTORED POSITION	TAG PULLED INITIAL/DATE	IND. VERF. INIT/DATE
AB-27B	SFV-140	Transfer Tube Gasket Drain	348	AB/119 by SFCs	CLOSED	11-17-05	CLOSED	81	NA
AB-27B	SFV-141	Transfer Tube Gasket Drain	436	AB/119	CLOSED	11-17-05	CLOSED	81	NA
AB-27B	SFV-142	Transfer Tube Test	348	AB/119	CLOSED	11-17-05	CLOSED	81	NA
AB-27B	SFV-143	Transfer Tube Test	436	AB/119	CLOSED	11-17-05	CLOSED	81	NA
AB-27B	SFV-144	Transfer Tube Test	348	AB/119	CLOSED	11-17-05	CLOSED	81	NA
AB-27B	SFV-145	Transfer Tube Test	436	AB/119	CLOSED	11-17-05	CLOSED	81	NA
AB/25	SFV-19	FTC Iso	347	AB/119 RM-A6 area	CLOSED	11-28-5	LOCKED CLOSED	12-5-05	12-5-05
AB/25	SFV-132	Pen 347 Drain & Test	347	AB/119 RM-A6 area	SEALED CLOSED & CAPPED	11-28-5	SEALED CLOSED & CAPPED	81	NA
	SFV-190	Pen 347 Drain & Test	347	AB/119 RM-A6 AREA	SEALED CLOSED & CAPPED	11-28-5	SEALED CLOSED & CAPPED	81	NA

ATTACHMENT 3B
ILRT VALVE LINEUPS PRIOR TO STABILIZATION

SYSTEM: DECAY HEAT REMOVAL
PEN. NO.: 329 **Dwg: FD-302-641, Sht. 3**

VALVE NO.	VALVE DESCRIPTION	PEN #	LOCATION	TEST LINEUP	INITIAL/DATE	RESTORED POSITION	TAG PULLED INITIAL/DATE	IND. VERF. INIT/DATE
AB-25 DHV-91	DH to Press Iso	329	AB/119 RM-A6 Area	CLOSED	~~TR~~ 11-29-05	CLOSED	(RI)	NA
AB-25 DHV-95	Pen 329 Drain & Test	329	AB/119 RM-A6 Area	SEALED CLOSED	W 11.28.5	SEALED CLOSED	(RI)	NA
DHV-127	~~Pen 329 Drain & Test~~ DHRS-1 TEST + DRAIN	329	AB 119 NORTH of RM-A6 ON FLOOR	SEALED CLOSED & CAPPED	W 11.28.5	SEALED CLOSED & CAPPED	(RI)	NA
DHV-128	~~Pen 329 Drain & Test~~ DHRS-1 TEST + DRAIN	329	AB 119 NORTH of RM-A6 ON FLOOR	SEALED CLOSED & CAPPED	W 11.28.5	SEALED CLOSED & CAPPED	(RI)	NA

*A nitrogen pressure of approximately 20 PSIG may be connected to aid in draining.

ATTACHMENT 3B
ILRT VALVE LINEUPS PRIOR TO STABILIZATION

SYSTEM: MAKEUP & PURIFICATION
PEN. NO.: 333, 336, 337, 338, 353, 377, 434, 435 **Dwg: FD-302-661 Sht. 5**

	VALVE NO.	VALVE DESCRIPTION	PEN #	LOCATION	TEST LINEUP	INITIAL/DATE	RESTORED POSITION	TAG PULLED INITIAL/DATE	IND. VERF. INIT/DATE
AB-6	MUV-276	Letdown Cooler ~~Vent~~ OUTLET LINE VENT	333	ABOVE MUV-1 AB/95 Pen. Area	CLOSED & CAPPED	IA 11-17-05	SEALED CLOSED & CAPPED	IA 12-5-05	12-5-05
MCB	MUV-49	Letdown Cooler Iso MUV-1A + 1B TO BLOCK ORIFICE	333	AB95 PEN. AREA ABOVE MUV-27	CLOSED	JLA 12/3/05	OPEN/CLOSED (5)	(81)	NA
AB-6	MUV-268	Pen 333 Drain & Test	333	AB/95 Pen. Area	SEALED CLOSED & CAPPED	IA 11-17-05	SEALED CLOSED & CAPPED	(81)	NA
AB-6	MUV-537	Pen 333 Drain & Test	333	AB/95 Pen. Area	SEALED CLOSED & CAPPED	IA 11-17-05	SEALED CLOSED & CAPPED	(81)	NA
MCB	MUV-567	Letdown Inside Containment Isolation (MCB)	333		CLOSED	JLA 12/3/05	OPEN	12/5/05	12/5/05
MCB	MUV-543	HPI to RB Sump Solenoid Valve	353		CLOSED	JLA 12/3/05	CLOSED (Note 3)	12/5/05	12/5/05
MCB	MUV-545	HPI to RB Sump Solenoid Valve	353		CLOSED	JLA 12/3/05	CLOSED (Note 4)	12/5/05	12/5/05
AB-7	MUV-539	HPI to RB Sump Aux. Bldg. Maintenance Valve	353	AB/95 Triangle Area	OPEN	11.29.5	LOCKED OPEN	12.5.5	12/5/5
AB-7	MUV-548	HPI to RB Sump Drain	353	AB/95 Triangle Area	CLOSED & CAPPED	IA 11-17-05	SEALED CLOSED & CAPPED	12.5.5	12/5/5
AB-7	MUV-561	HPI to RB Sump AB Vent	353	AB/95 Triangle Area	CLOSED & CAPPED	IA 11-17-05	SEALED CLOSED & CAPPED	12.5.5	12/5/5
AB-7	MUV-547	HPI to RB Sump Vent	353	AB/95 Triangle Area	CLOSED & CAPPED	IA 11-17-05	SEALED CLOSED & CAPPED	12.5.5	12/5/5
AB-25	MUV-269	Pen 377 Drain & Test	377		SEALED CLOSED & CAPPED	AG 11.29.5	SEALED CLOSED & CAPPED	(81)	NA
MCB	MUV-261	RCP-1D Bleedoff Iso	377		CLOSED	JLA 12/03/05	OPEN/CLOSED (5)	(81)	NA
MCB	MUV-260	RCP-1C Bleedoff Iso	377		CLOSED	JLA 12/03/05	OPEN/CLOSED (5)	(81)	NA
MCB	MUV-259	RCP-1B Bleedoff Iso	377		CLOSED	JLA 12/03/05	OPEN/CLOSED (5)	(81)	NA
MCB	MUV-258	RCP-1A Bleedoff Iso	377		CLOSED	JLA 12/03/05	OPEN/CLOSED (5)	(81)	NA
MCB	MUV-253	Bleedoff Iso	377		CLOSED	JLA 12/03/05	OPEN/CLOSED (5)	(81)	NA
	MUV-538	Pen 377 Drain & Test	377		SEALED CLOSED CAPPED	AG 11.29.5	SEALED CLOSED	(81)	NA

ATTACHMENT 3B
ILRT VALVE LINEUPS PRIOR TO STABILIZATION

SYSTEM: MAKEUP & PURIFICATION

PEN. NO.: 333, 336, 337, 338, 353, 377, 434, 435 **Dwg: FD-302-661 Sht. 5**

VALVE NO.	VALVE DESCRIPTION	PEN #	LOCATION	TEST LINEUP	INITIAL/DATE	RESTORED POSITION	TAG PULLED INITIAL/DATE	IND. VERF. INIT/DATE
				CLOSED & CAPPED	SOB 8/8/98	& CAPPED	(81)	NA
MCB MUV-18	RCP Seal Iso	338	AB 119 RM-A6 AREA OVERHEAD ABOVE MUV-432	CLOSED	12/3/05	OPEN	12/5/1	12.5.5
MUV-23	HPI Loop A	434	AB 95 95 PENETRATION AREA BY MUMC-1	CLOSED	12/3/05	CLOSED	(81)	NA
MUV-24	HPI Loop A	435	AB 95 HPI INJECTION AREA	CLOSED	12/3/05	CLOSED	(81)	NA
MUV-27	Loop A Makeup Iso	435	AB 95 95 PIPING PENETRATION AREA ABOVE MUV-24	CLOSED	12/3/05	OPEN	12/5/1	12.5.5
MUV-25	HPI Loop B	336	AB 95 95 PIPING PENETRATION AREA NORTH SIDE BY MUMC-2	CLOSED	12/3/05	CLOSED	(81)	NA
MUV-26	HPI Loop B	337	AB 95 95 PIPING PENETRATION AREA NORTH SIDE BY MUMC-2	CLOSED	12/3/05	CLOSED	(81)	NA

NOTES: 1. Valve electrical power ON - DPDP-8A, Switch 4 CLOSED 3. Valve electrical power OFF - DPDP-8A, Switch 4 OPEN 5. OPEN when in service; CLOSED when NOT in service.
2. Valve electrical power ON - DPDP-8B, Switch 8 CLOSED 4. Valve electrical power OFF - DPDP-8A, Switch 8 OPEN

** Two of three letdown coolers in service.

*Nitrogen/Air may be used, if assist draining. Refer to SP-179C, CONTAINMENT LEAKAGE TEST-TYPE "C", Enclosure 16 for guidance.

ATTACHMENT 3B
ILRT VALVE LINEUPS PRIOR TO STABILIZATION

SYSTEM: LIQUID SAMPLING
PEN. NO.: 425,439,440,441 **Dwg.: FD-302-672, Sheet 1**

	VALVE NO.	VALVE DESCRIPTION	PEN #	LOCATION	TEST LINEUP	INITIAL/DATE	RESTORED POSITION	TAG PULLED INITIAL/DATE	IND. VERF. INIT/DATE
IB-1	CAV-133	Pen 439 Drain & Test	439	IB/AS CAV-2 VA	CLOSED **FLANGE INSTALLED	11-17-05	SEALED CLOSED & FLANGED	12-5-05	12-5-05
MCB	CAV-126	RC Letdown Sample	439		CLOSED	12/3/05	CLOSED	(81)	NA
MCB	CAV-1	PZR Steam Space Sample	439		CLOSED	12/3/05	CLOSED	(81)	NA
MCB	CAV-3	PZR Water Space Sample	439		CLOSED	12/3/05	CLOSED	(81)	NA
MCB	CAV-2	Sample Iso	439	~~IB AS PRESSURIZER + LETDOWN OUTSIDE PEN SAMPLE ISO~~	CLOSED	12/3/05	CLOSED	(81)	NA
IB-1	CAV-619	Pen 439 Test Conn.	439	IB/AS CAV-2 VA	CLOSED & CAPPED	11-17-05	SEALED CLOSED & CAPPED	12-5-05	12-5-05
IB-1	CAV-622	Pen 439 Test Conn	439	IB/AS CAV-2 VA	CLOSED & CAPPED	11-17-05	SEALED CLOSED & CAPPED	12-5-05	12-5-05
MCB	CAV-4	SG 3A Sample Iso	440		CLOSED	12/3/05	CLOSED	(81)	NA
IB-1	CAV-154	Pen 440 Drain & Test	440	IB/AS CAV-2 VA	CLOSED & *FLANGE INSTALLED	11-17-05	SEALED CLOSED & FLANGED	12-5-05	12-5-05
MCB	CAV-6	SG 3A Sample Iso	440	IB AS CAV-2 VALVE ALLEY	CLOSED	12/3/05	CLOSED	(81)	NA
MCB	CAV-5	SG 3B Sample Iso	441		CLOSED	12/3/05	CLOSED	(81)	NA
IB-1	CAV-155	Pen 441 Drain & Test	441	IB/AS CAV-2 VA	CLOSED & *FLANGE INSTALLED	11-17-05	SEALED CLOSED & FLANGED	12-5-05	12-5-05
MCB	CAV-7	SG 3B Sample Iso	441	IB AS CAV-2 VALVE ALLEY	CLOSED	12/3/05	CLOSED	(81)	NA
MCB	CAV-433	RB Sump Sample Iso	425		CLOSED	12/3/05	CLOSED PWR/OFF	12/5/05	12.5.5
MCB	CAV-434	RB Sump Sample Iso	425		CLOSED	12/3/05	CLOSED PWR/OFF	12/5/05	12.5.5
MCB	CAV-435	Pass Iso	425	IB AS WEST OF CAV-2 VALVE ALLEY	CLOSED	12/3/05	CLOSED PWR/OFF	12/5/05	12.5.5
MCB	CAV-436	Pass Iso	425	IB AS WEST OF CAV-2 VALVE ALLEY	CLOSED	12/3/05	CLOSED PWR/OFF	12/5/05	12.5.5
MCB	CAV-429	RCP-1A Disch Iso	439		CLOSED	12/3/05	CLOSED PWR/OFF	12/5/05	12.5.5
MCB	CAV-430	RCP-1A Suction Iso	439		CLOSED	12/3/05	CLOSED PWR/OFF	12/5/05	12.5.5
MCB	CAV-431	Sample Iso	439	IB AS CAV-2 VALVE ALLEY	CLOSED	12/3/05	CLOSED	(81)	NA
MCB	CAV-432	Sample Iso	439	IB AS CAV-2 VALVE ALLEY	CLOSED	12/3/05	CLOSED PWR/OFF	12/5/05	12.5.5

ATTACHMENT 3B
ILRT VALVE LINEUPS PRIOR TO STABILIZATION

SYSTEM: LIQUID SAMPLING
PEN. NO.: 425,439,440,441 **Dwg.: FD-302-672, Sheet 1**

	VALVE NO.	VALVE DESCRIPTION	PEN #	LOCATION	TEST LINEUP	INITIAL/DATE	RESTORED POSITION	TAG PULLED INITIAL/DATE	IND. VERF. INIT/DATE
IB-1	CAV-725	Pen. 425 Drain & Test	425	IB/95 CAV-2 VA	SEALED CLOSED & CAPPED	11-17-05	SEALED CLOSED & CAPPED	8 12-4-5	NA
IB-1	CAV-730	Pen. 425 Drain & Test	425	IB/95 CAV-2 VA	SEALED CLOSED & CAPPED	11-17-05	SEALED CLOSED & CAPPED		
IB-1	CAV-726	Pen. 425 Drain & Test	425	IB/95 CAV-2 VA	SEALED CLOSED & CAPPED	11-17-05	SEALED CLOSED & CAPPED		
IB-1	CAV-731	Pen. 425 Drain & Test	425	IB/95 CAV-2 VA	SEALED CLOSED & CAPPED	11-17-05	SEALED CLOSED & CAPPED		
IB-1	CAV-727	Pen. 439 Drain & Test	439	IB/95 CAV-2 VA	SEALED CLOSED & CAPPED	11-17-05	SEALED CLOSED & CAPPED		
IB-1	CAV-732	Pen. 439 Drain & Test	439	IB/95 CAV-2 VA	SEALED CLOSED & CAPPED	11-17-05	SEALED CLOSED & CAPPED		
IB-1	CAV-733	Pen. 440 Drain & Test	440	IB/95 CAV-2 VA	SEALED CLOSED & CAPPED	11-17-05	SEALED CLOSED & CAPPED		
IB-1	CAV-734	Pen. 441 Drain & Test	441	IB/95 CAV-2 VA	SEALED CLOSED & CAPPED	11-17-05	SEALED CLOSED & CAPPED		

* A nitrogen pressure of approximately 20 PSIG may be used to aid in draining
**If a test flange has been installed for venting/draining/testing, removal of the test flange cap or plug will satisfy flange removal requirement and installation of test flange cap or plug will satisfy the flange installation requirement.

ATTACHMENT 3B
ILRT VALVE LINEUPS PRIOR TO STABILIZATION

SYSTEM: LIQUID WASTE DISPOSAL
PEN. NO.: 339,349,374
Dwg.: FD-302-681 Sheet 1

	VALVE NO.	VALVE DESCRIPTION	PEN #	LOCATION	TEST LINEUP	INITIAL/DATE	RESTORED POSITION	TAG PULLED INITIAL/DATE	IND. VERF. INIT/DATE
AB-7	WDV-807	Pen 349 Drain & Test	349	AB/95 Triangle Rm	CLOSED & CAPPED	11-17-05	SEALED CLOSED & CAPPED	12.5.5	12/5/05
AB-7	WDV-808	Pen 374 Drain & Test	374	AB/95 Triangle Rm	SEALED CLOSED & CAPPED	11-17-05	SEALED CLOSED & CAPPED	8 12-4-5	NA
MCB	WDV-3	RB Sump Pump Iso	339	MCB	CLOSED	12/3/05	OPEN	12/5/05	12.5.5
AB-7	WDV-809	Pen 339 Drain & Test	339	AB/95 Triangle Rm	SEALED CLOSED & CAPPED	12032K	SEALED CLOSED & CAPPED	8 12-4-5	NA
MCB	WDV-4	RB Sump Pump Iso	339	MCB	CLOSED	12/3/05	OPEN	12/5/05	12.5.5
AB-7	WDV-810	WDV-4 Downstream Vent (RB Sump Disch Vent)	339	NORTH EAST SIDE TRIANGLE ROOM	OPEN, UNCAPPED GAUGE INSTALLED	11-29-05	CLOSED	12.5.5	12/5/05
AB-7	WDV-1242	WDV-4 Downstream Isolation (RB Sump Manual Iso)	339	NORTH EAST SIDE TRIANGLE ROOM	CLOSED	EC 30 Dec 05	OPEN	12.5.5	12/5/05

NOTE: Perform core flood lineup prior to performing gas waste disposal lineup.

SYSTEM: GAS WASTE DISPOSAL
PEN. NO.: 354
Drawing: FD-302-691 Sheet 3

	VALVE NO.	VALVE DESCRIPTION	PEN #	LOCATION	TEST LINEUP	INITIAL/DATE	RESTORED POSITION	TAG PULLED INITIAL/DATE	IND. VERF. INIT/DATE
AB-25	WDV-371	Pen 354 Drain & Test	354		CLOSED & CAPPED	11-29-05	SEALED CLOSED & CAPPED	12-5-05	12-5-05
~~AEB~~	WDV-1022		354	~~MCB~~	OPEN	12032K	CLOSED	12-5-05	12-5-05

RADWASTE VENT PANEL IN AUX BLDG

ATTACHMENT 3B
ILRT VALVE LINEUPS PRIOR TO STABILIZATION

SYSTEM: RB PRESSURE SENSING & TESTING / INSTRUMENT AIR
PEN. NO.: 319, 426, 429, 442 **Drawing: FD-302-712 Sheet 1**

VALVE NO.	VALVE DESCRIPTION	VENT LINEUP	INITIAL/DATE	TEST LINEUP	INITIAL/DATE	RESTORED POSITION	TAG PULLED INITIAL/DATE	IND. VERF. INIT/DATE
IAV-725	Instrument Air Isolation Valve to Cabinet ESPSC-3B1	CLOSED		CLOSED		OPEN	AG 12.5.5	α 12.5.5
IAV-726	Instrument Air Isolation Valve to Cabinet ESPSC-3B1	CLOSED		CLOSED		OPEN	AG 12.5.5	α 12.5.5
IAV-727	Instrument Air Isolation Valve to Cabinet ESPSC-3A1	CLOSED		CLOSED		OPEN	AG 12.5.5	α 12.5.5
IAV-728	Instrument Air Isolation Valve to Cabinet ESPSC-3A1	CLOSED		CLOSED		OPEN	AG 12.5.5	α 12.5.5
BSV-147	Pen 426 Iso.	LOCKED OPEN		LOCKED OPEN		LOCKED OPEN		
BSV-64	BS-17-PT Iso.	LOCKED OPEN		LOCKED OPEN		LOCKED OPEN		
BSV-254	Isolation Valve for BS-91-PT	SEALED OPEN		SEALED OPEN		SEALED OPEN		
BSV-255	Isolation Valve for BS-93-PT	SEALED OPEN		SEALED OPEN		SEALED OPEN		
BSV-241	Isolation Valve for BS-91-PT	SEALED OPEN		SEALED OPEN		SEALED OPEN		
BSV-252	Isolation Valve for BS-17-PT	SEALED OPEN		SEALED OPEN		SEALED OPEN		
BSV-236	BS-91-PT Test Valve	SEALED CLOSED AND CAPPED		SEALED CLOSED AND CAPPED		SEALED CLOSED AND CAPPED		
BSV-237	BS-93-PT Test Valve	SEALED CLOSED AND CAPPED		SEALED CLOSED AND CAPPED		SEALED CLOSED AND CAPPED		
BSV-238	BS-17-PT Test Valve	SEALED CLOSED AND CAPPED		SEALED CLOSED AND CAPPED		SEALED CLOSED AND CAPPED		
BSV-229	BS-18-PS Isolation Valve	SEALED OPEN		SEALED OPEN		SEALED OPEN		

ATTACHMENT 3B
ILRT VALVE LINEUPS PRIOR TO STABILIZATION

SYSTEM: RB PRESSURE SENSING & TESTING / INSTRUMENT AIR
PEN. NO.: 319, 426, 429, 442 **Drawing: FD-302-712 Sheet 1**

	VALVE NO.	VALVE DESCRIPTION	VENT LINEUP	INITIAL/DATE	TEST LINEUP	INITIAL/DATE	RESTORED POSITION	TAG PULLED INITIAL/DATE	IND. VERF. INIT/DATE
IB-1	IAV-725	Instrument Air Isolation Valve to Cabinet ESPSC-3B1	CLOSED	IR 11-29-05	CLOSED	IR 11-29-05	OPEN		
IB-1	IAV-726	Instrument Air Isolation Valve to Cabinet ESPSC-3B1	CLOSED	IR 11-29-05	CLOSED	IR 11-29-05	OPEN		
IB-1	IAV-727	Instrument Air Isolation Valve to Cabinet ESPSC-3A1	CLOSED	IR 11-29-05	CLOSED	IR 11-29-05	OPEN		
IB-1	IAV-728	Instrument Air Isolation Valve to Cabinet ESPSC-3A1	CLOSED	IR 11-29-05	CLOSED	IR 11-29-05	OPEN		
	BSV-147	Pen 426 Iso.	LOCKED OPEN	IR 11-17-05	LOCKED OPEN	IR 11-17-05	LOCKED OPEN	(SP) 8.24 SNA	
	BSV-64	BS-17-PT Iso.	LOCKED OPEN	IR 11-17-05	LOCKED OPEN	IR 11-17-05	LOCKED OPEN		
	BSV-254	Isolation Valve for BS-91-PT	SEALED OPEN	W 11-28-5	SEALED OPEN	W 11-28-5	SEALED OPEN		
	BSV-255	Isolation Valve for BS-93-PT	SEALED OPEN	W 11-28-5	SEALED OPEN	W 11-28-5	SEALED OPEN		
	BSV-241	Isolation Valve for BS-91-PT	SEALED OPEN	W 11-28-5	SEALED OPEN	W 11-28-5	SEALED OPEN		
	BSV-252	Isolation Valve for BS-17-PT	SEALED OPEN	W 11-28-5	SEALED OPEN	W 11-28-5	SEALED OPEN		
	BSV-236	BS-91-PT Test Valve	SEALED CLOSED AND CAPPED	W 11-28-5	SEALED CLOSED AND CAPPED	W 11-28-5	SEALED CLOSED AND CAPPED		
	BSV-237	BS-93-PT Test Valve	SEALED CLOSED AND CAPPED	W 11-28-5	SEALED CLOSED AND CAPPED	W 11-28-5	SEALED CLOSED AND CAPPED		
	BSV-238	BS-17-PT Test Valve	SEALED CLOSED AND CAPPED	W 11-28-5	SEALED CLOSED AND CAPPED	W 11-28-5	SEALED CLOSED AND CAPPED		
	BSV-229	BS-18-PS Isolation Valve	SEALED OPEN	W 11-28-5	SEALED OPEN	W 11-28-5	SEALED OPEN		

ATTACHMENT 3B
ILRT VALVE LINEUPS PRIOR TO STABILIZATION

SYSTEM: RB PRESSURE SENSING & TESTING / INSTRUMENT AIR
PEN. NO.: 319, 426, 429, 442 **Drawing: FD-302-712 Sheet 1**

VALVE NO.	VALVE DESCRIPTION	VENT LINEUP	INITIAL/DATE	TEST LINEUP	INITIAL/DATE	RESTORED POSITION	TAG PULLED INITIAL/DATE	IND. VERF. INIT/DATE
BSV-242	BS-24-PS Isolation Valve	SEALED OPEN		SEALED OPEN		SEALED OPEN		
BSV-243	BS-59-PS Isolation Valve	SEALED OPEN		SEALED OPEN		SEALED OPEN		
BSV-230	BS-21-PS Isolation Valve	SEALED OPEN		SEALED OPEN		SEALED OPEN		
BSV-248	BS-27-PS Isolation Valve	SEALED OPEN		SEALED OPEN		SEALED OPEN		
BSV-181	Reactor Building Pressure Switch (BS-59-PS) Cntnmnt Boundary Isolation Valve	CLOSED		CLOSED		SEALED CLOSED	AG 12.5.5	α 12.5.5
BSV-182	Reactor Building Pressure Switch (BS-59-PS) Cntnmnt Boundary Isolation Valve	OPEN		CLOSED		SEALED CLOSED	AG 12.5.5	α 12.5.5
BSV-183	Reactor Building Pressure Switch (BS-59-PS) Instrument Air Test Valve	UNCAPPED AND OPEN		UNCAPPED AND OPEN		CLOSED AND CAPPED	AG 12.5.5	α 12.5.5
BSV-184	Reactor Building Pressure Switch (BS-24-PS) Cntnmnt Boundary Isolation Valve	CLOSED		CLOSED		SEALED CLOSED	AG 12.5.5	α 12.5.5
BSV-185	Reactor Building Pressure Switch (BS-24-PS) Cntnmnt Boundary Isolation Valve	OPEN		CLOSED		SEALED CLOSED	AG 12.5.5	α 12.5.5
BSV-186	Reactor Building Pressure Switch (BS-24-PS) Instrument Air Test Valve	UNCAPPED AND OPEN		UNCAPPED AND OPEN		CLOSED AND CAPPED	AG 12.5.5	α 12.5.5

ATTACHMENT 3B
ILRT VALVE LINEUPS PRIOR TO STABILIZATION

SYSTEM: RB PRESSURE SENSING & TESTING / INSTRUMENT AIR

PEN. NO.: 319, 426, 429, 442 **Drawing: FD-302-712 Sheet 1**

VALVE NO.	VALVE DESCRIPTION	VENT LINEUP	INITIAL/DATE	TEST LINEUP	INITIAL/DATE	RESTORED POSITION	TAG PULLED INITIAL/DATE	IND. VERF. INIT/DATE
BSV-242	BS-24-PS Isolation Valve	SEALED OPEN	W 11-28-5	SEALED OPEN	W 11-28-5	SEALED OPEN	(81) AB 12-1	NA
BSV-243	BS-59-PS Isolation Valve	SEALED OPEN	W 11-28-5	SEALED OPEN	W 11-28-5	SEALED OPEN		
BSV-230	BS-21-PS Isolation Valve	SEALED OPEN	W 11-28-5	SEALED OPEN	W 11-28-5	SEALED OPEN		
BSV-248	BS-27-PS Isolation Valve	SEALED OPEN	W 11-28-5	SEALED OPEN	W 11-28-5	SEALED OPEN		
BSV-181	Reactor Building Pressure Switch (BS-59-PS) Cntnmnt Boundary Isolation Valve	CLOSED	W 11-28-5	CLOSED/ SEALED	W 11-28-5	SEALED CLOSED		
IB-1 BSV-182	Reactor Building Pressure Switch (BS-59-PS) Cntnmnt Boundary Isolation Valve	OPEN	11-29-05	CLOSED/ SEALED	W 11-28-5	SEALED CLOSED		
IB-1 BSV-183	Reactor Building Pressure Switch (BS-59-PS) Instrument Air Test Valve	UNCAPPED AND OPEN	11-29-05	UNCAPPED AND OPEN	11-29-05	CLOSED AND CAPPED		
IB-1 BSV-184	Reactor Building Pressure Switch (BS-24-PS) Cntnmnt Boundary Isolation Valve	CLOSED	11-29-05	CLOSED	W 11-28-5	SEALED CLOSED		
IB-1 BSV-185	Reactor Building Pressure Switch (BS-24-PS) Cntnmnt Boundary Isolation Valve	OPEN	11-29-05	CLOSED	W 11-28-5	SEALED CLOSED		
IB-1 BSV-186	Reactor Building Pressure Switch (BS-24-PS) Instrument Air Test Valve	UNCAPPED AND OPEN	11-29-05	UNCAPPED AND OPEN	11-29-05	CLOSED AND CAPPED		

ATTACHMENT 3B
ILRT VALVE LINEUPS PRIOR TO STABILIZATION

SYSTEM: RB PRESSURE SENSING & TESTING / INSTRUMENT AIR

PEN. NO.: 319, 426, 429, 442 **Drawing: FD-302-712 Sheet 1**

VALVE NO.	VALVE DESCRIPTION	VENT LINEUP	INITIAL/DATE	TEST LINEUP	INITIAL/DATE	RESTORED POSITION	TAG PULLED INITIAL/DATE	IND. VERF. INIT/DATE
BSV-187	Reactor Building Pressure Switch (BS-18-PS) Cntnmnt Boundary Isolation Valve	CLOSED		CLOSED		SEALED CLOSED	AG 12-5-5	α 12.5.5
BSV-188	Reactor Building Pressure Switch (BS-18-PS) Cntnmnt Boundary Isolation Valve	OPEN		CLOSED		SEALED CLOSED	AG 12-5-5	α 12.5.5
BSV-189	Reactor Building Pressure Switch (BS-18-PS) Instrument Air Test Valve	UNCAPPED AND OPEN		UNCAPPED AND OPEN		CLOSED AND CAPPED	AG 12-5-5	α 12.5.5
BSV-190	Reactor Building Pressure Switch (BS-27-PS) Cntnmnt Boundary Isolation Valve	CLOSED		CLOSED		SEALED CLOSED	AG 12-5-5	α 12.5.5
BSV-191	Reactor Building Pressure Switch (BS-27-PS) Cntnmnt Boundary Isolation Valve	OPEN		CLOSED		SEALED CLOSED	AG 12-5-5	α 12.5.5
BSV-192	Reactor Building Pressure Switch (BS-27-PS) Instrument Air Test Valve	UNCAPPED AND OPEN		UNCAPPED AND OPEN		CLOSED AND CAPPED	AG 12-5-5	α 12.5.5
BSV-193	Reactor Building Pressure Switch (BS-21-PS) Cntnmnt Boundary Isolation Valve	CLOSED		CLOSED		SEALED CLOSED	AG 12-5-5	α 12.5.5
BSV-194	Reactor Building Pressure Switch (BS-21-PS) Cntnmnt Boundary Isolation Valve	OPEN		CLOSED		SEALED CLOSED	AG 12-5-5	α 12.5.5

ATTACHMENT 3B
ILRT VALVE LINEUPS PRIOR TO STABILIZATION

SYSTEM: RB PRESSURE SENSING & TESTING / INSTRUMENT AIR
PEN. NO.: 319, 426, 429, 442 **Drawing: FD-302-712 Sheet 1**

	VALVE NO.	VALVE DESCRIPTION	VENT LINEUP	INITIAL/DATE	TEST LINEUP	INITIAL/DATE	RESTORED POSITION	TAG PULLED INITIAL/DATE	IND. VERF. INIT/DATE
IB-1	BSV-187	Reactor Building Pressure Switch (BS-18-PS) Cntnmnt Boundary Isolation Valve	CLOSED	IR 11-29-05	CLOSED	IR 11-29-05	SEALED CLOSED		
IB-1	BSV-188	Reactor Building Pressure Switch (BS-18-PS) Cntnmnt Boundary Isolation Valve	OPEN	IR 11-29-05	CLOSED	IR 11-29-05	SEALED CLOSED		
IB-1	BSV-189	Reactor Building Pressure Switch (BS-18-PS) Instrument Air Test Valve	UNCAPPED AND OPEN	IR 11-29-05	UNCAPPED AND OPEN	IR 11-29-05	CLOSED AND CAPPED		
IB-1	BSV-190	Reactor Building Pressure Switch (BS-27-PS) Cntnmnt Boundary Isolation Valve	CLOSED	IR 11-29-05	CLOSED	IR 11-29-05	SEALED CLOSED		
IB-1	BSV-191	Reactor Building Pressure Switch (BS-27-PS) Cntnmnt Boundary Isolation Valve	OPEN	IR 11-29-05	CLOSED	IR 11-29-05	SEALED CLOSED		
IB-1	BSV-192	Reactor Building Pressure Switch (BS-27-PS) Instrument Air Test Valve	UNCAPPED AND OPEN	IR 11-29-05	UNCAPPED AND OPEN	IR 11-29-05	CLOSED AND CAPPED		
IB-1	BSV-193	Reactor Building Pressure Switch (BS-21-PS) Cntnmnt Boundary Isolation Valve	CLOSED	IR 11-29-05	CLOSED	IR 11-29-05	SEALED CLOSED		
IB-1	BSV-194	Reactor Building Pressure Switch (BS-21-PS) Cntnmnt Boundary Isolation Valve	OPEN	IR 11-29-05	CLOSED	IR 11-29-05	SEALED CLOSED		

ATTACHMENT 3B
ILRT VALVE LINEUPS PRIOR TO STABILIZATION

SYSTEM: RB PRESSURE SENSING & TESTING / INSTRUMENT AIR

PEN. NO.: 319, 426, 429, 442 **Drawing: FD-302-712 Sheet 1**

VALVE NO.	VALVE DESCRIPTION	VENT LINEUP	INITIAL/DATE	TEST LINEUP	INITIAL/DATE	RESTORED POSITION	TAG PULLED INITIAL/DATE	IND. VERF. INIT/DATE
BSV-195	Reactor Building Pressure Switch (BS-21-PS) Instrument Air Test Valve	UNCAPPED AND OPEN		UNCAPPED AND OPEN		CLOSED AND CAPPED	AG 12.5.5	α 12.5.5
IAV-733	Instrument Air Isolation Valve to Cabinet ESPSC-3B3	CLOSED		CLOSED		OPEN	AG 12.5.5	α 12.5.5
IAV-734	Instrument Air Isolation Valve to Cabinet ESPSC-3B3	CLOSED		CLOSED		OPEN	AG 12.5.5	α 12.5.5
IAV-735	Instrument Air Isolation Valve to Cabinet ESPSC-3A3	CLOSED		CLOSED		OPEN	AG 12.5.5	α 12.5.5
IAV-736	Instrument Air Isolation Valve to Cabinet ESPSC-3A3	CLOSED		CLOSED		OPEN	AG 12.5.5	α 12.5.5
BSV-131	Pen 442 Iso.	LOCKED OPEN		LOCKED OPEN		LOCKED OPEN		
BSV-233	BS-20-PS Isolation Valve	SEALED OPEN		SEALED OPEN		SEALED OPEN		
BSV-246	BS-26-PS Isolation Valve	SEALED OPEN		SEALED OPEN		SEALED OPEN		
BSV-247	BS-61-PS Isolation Valve	SEALED OPEN		SEALED OPEN		SEALED OPEN		
BSV-234	BS-23-PS Isolation Valve	SEALED OPEN		SEALED OPEN		SEALED OPEN		
BSV-250	BS-29-PS Isolation Valve	SEALED OPEN		SEALED OPEN		SEALED OPEN		
BSV-211	Reactor Building Pressure Switch (BS-61-PS) Cntnmnt Boundary Isolation Valve	CLOSED		CLOSED		SEALED CLOSED	AG 12.5.5	α 12.5.5

ATTACHMENT 3B
ILRT VALVE LINEUPS PRIOR TO STABILIZATION

SYSTEM: RB PRESSURE SENSING & TESTING / INSTRUMENT AIR

PEN. NO.: 319, 426, 429, 442 **Drawing: FD-302-712 Sheet 1**

	VALVE NO.	VALVE DESCRIPTION	VENT LINEUP	INITIAL/DATE	TEST LINEUP	INITIAL/DATE	RESTORED POSITION	TAG PULLED INITIAL/DATE	IND. VERF. INIT/DATE
IB-1	BSV-195	Reactor Building Pressure Switch (BS-21-PS) Instrument Air Test Valve	UNCAPPED AND OPEN	IB 11-29-05	UNCAPPED AND OPEN	IB 11-29-05	CLOSED AND CAPPED		
IB-1	IAV-733	Instrument Air Isolation Valve to Cabinet ESPSC-3B3	CLOSED	IB 11-29-05	CLOSED	IB 11-29-05	OPEN		
IB-1	IAV-734	Instrument Air Isolation Valve to Cabinet ESPSC-3B3	CLOSED	IB 11-29-05	CLOSED	IB 11-29-05	OPEN		
IB-1	IAV-735	Instrument Air Isolation Valve to Cabinet ESPSC-3A3	CLOSED	IB 11-29-05	CLOSED	IB 11-29-05	OPEN		
IB-1	IAV-736	Instrument Air Isolation Valve to Cabinet ESPSC-3A3	CLOSED	IB 11-29-05	CLOSED	IB 11-29-05	OPEN		
	BSV-131	Pen 442 Iso.	LOCKED OPEN	IB 11-17-05	LOCKED OPEN	IB 11-17-05	LOCKED OPEN	(8) AB 18	NA
	BSV-233	BS-20-PS Isolation Valve	SEALED OPEN	IB 11-17-05	SEALED OPEN	IB 11-17-05	SEALED OPEN		
	BSV-246	BS-26-PS Isolation Valve	SEALED OPEN	IB 11-17-05	SEALED OPEN	IB 11-17-05	SEALED OPEN		
	BSV-247	BS-61-PS Isolation Valve	SEALED OPEN	IB 11-17-05	SEALED OPEN	IB 11-17-05	SEALED OPEN		
	BSV-234	BS-23-PS Isolation Valve	SEALED OPEN	W 11.28.5	SEALED OPEN	W 11.28.5	SEALED OPEN		
	BSV-250	BS-29-PS Isolation Valve	SEALED OPEN	IB 11-17-05	SEALED OPEN	IB 11-17-05	SEALED OPEN		
	BSV-211	Reactor Building Pressure Switch (BS-61-PS) Cntnmnt Boundary Isolation Valve	CLOSED	IB 11-17-05	CLOSED	IB 11-17-05	SEALED CLOSED		

Performed SP-358B 4.1 AB 12/3/05

ATTACHMENT 3B
ILRT VALVE LINEUPS PRIOR TO STABILIZATION

SYSTEM: RB PRESSURE SENSING & TESTING / INSTRUMENT AIR
PEN. NO.: 319, 426, 429, 442 **Drawing: FD-302-712 Sheet 1**

VALVE NO.	VALVE DESCRIPTION	VENT LINEUP	INITIAL/DATE	TEST LINEUP	INITIAL/DATE	RESTORED POSITION	TAG PULLED INITIAL/DATE	IND. VERF. INIT/DATE
BSV-195	Reactor Building Pressure Switch (BS-21-PS) Instrument Air Test Valve	UNCAPPED AND OPEN		UNCAPPED AND OPEN		CLOSED AND CAPPED		
IAV-733	Instrument Air Isolation Valve to Cabinet ESPSC-3B3	CLOSED		CLOSED	358B	OPEN		
IAV-734	Instrument Air Isolation Valve to Cabinet ESPSC-3B3	CLOSED		CLOSED		OPEN		
IAV-735	Instrument Air Isolation Valve to Cabinet ESPSC-3A3	CLOSED		CLOSED		OPEN		
IAV-736	Instrument Air Isolation Valve to Cabinet ESPSC-3A3	CLOSED	12-3-5	CLOSED	12-3-5	OPEN	12-3-5	
BSV-131	Pen 442 Iso.	LOCKED OPEN		LOCKED OPEN		LOCKED OPEN		
BSV-233	BS-20-PS Isolation Valve	SEALED OPEN		SEALED OPEN		SEALED OPEN		
BSV-246	BS-26-PS Isolation Valve	SEALED OPEN		SEALED OPEN	358B	SEALED OPEN		
BSV-247	BS-61-PS Isolation Valve	SEALED OPEN		SEALED OPEN		SEALED OPEN		
BSV-234	BS-23-PS Isolation Valve	SEALED OPEN		SEALED OPEN		SEALED OPEN		
BSV-250	BS-29-PS Isolation Valve	SEALED OPEN		SEALED OPEN		SEALED OPEN		
BSV-211	Reactor Building Pressure Switch (BS-61-PS) Cntnmnt Boundary Isolation Valve	CLOSED		CLOSED		SEALED CLOSED		

2 3 1

Valves restored and the after performance of SP-358B place in vent and test lineup positions AB 12-3-05

ATTACHMENT 3B
ILRT VALVE LINEUPS PRIOR TO STABILIZATION

SYSTEM: RB PRESSURE SENSING & TESTING / INSTRUMENT AIR

PEN. NO.: 319, 426, 429, 442 **Drawing: FD-302-712 Sheet 1**

VALVE NO.	VALVE DESCRIPTION	VENT LINEUP	INITIAL/DATE	TEST LINEUP	INITIAL/DATE	RESTORED POSITION	TAG PULLED INITIAL/DATE	IND. VERF. INIT/DATE
BSV-212	Reactor Building Pressure Switch (BS-61-PS) Cntnmnt Boundary Isolation Valve	OPEN		CLOSED		SEALED CLOSED	AG 12.5.5	α 12.5.5
BSV-213	Reactor Building Pressure Switch (BS-61-PS) Instrument Air Test Valve	UNCAPPED AND OPEN		UNCAPPED AND OPEN		CLOSED AND CAPPED	AG 12.5.5	α 12.5.5
BSV-214	Reactor Building Pressure Switch (BS-26-PS) Cntnmnt Boundary Isolation Valve	CLOSED		CLOSED		SEALED CLOSED	AG 12.5.5	α 12.5.5
BSV-215	Reactor Building Pressure Switch (BS-26-PS) Cntnmnt Boundary Isolation Valve	OPEN		CLOSED		SEALED CLOSED	AG 12.5.5	α 12.5.5
BSV-216	RB Pressure Switch (BS-26-PS) Instrument Air Test Valve	UNCAPPED AND OPEN		UNCAPPED AND OPEN		CLOSED AND CAPPED	AG 12.5.5	α 12.5.5
BSV-217	Reactor Building Pressure Switch (BS-20-PS) Cntnmnt Boundary Isolation Valve	CLOSED		CLOSED		SEALED CLOSED	AG 12.5.5	α 12.5.5
BSV-218	Reactor Building Pressure Switch (BS-20-PS) Cntnmnt Boundary Isolation Valve	OPEN		CLOSED		SEALED CLOSED	AG 12.5.5	α 12.5.5
BSV-219	RB Pressure Switch (BS-20-PS) Instrument Air Test Valve	UNCAPPED AND OPEN		UNCAPPED AND OPEN		CLOSED AND CAPPED	AG 12.5.5	α 12.5.5

ATTACHMENT 3B
ILRT VALVE LINEUPS PRIOR TO STABILIZATION

SYSTEM: RB PRESSURE SENSING & TESTING / INSTRUMENT AIR
PEN. NO.: 319, 426, 429, 442 **Drawing: FD-302-712 Sheet 1**

	VALVE NO.	VALVE DESCRIPTION	VENT LINEUP	INITIAL/DATE	TEST LINEUP	INITIAL/DATE	RESTORED POSITION	TAG PULLED INITIAL/DATE	IND. VERF. INIT/DATE
IB-1	BSV-212	Reactor Building Pressure Switch (BS-61-PS) Cntnmnt Boundary Isolation Valve	OPEN	IR 11-29-05	CLOSED	IR 11-29-05	SEALED CLOSED		
IB-1	BSV-213	Reactor Building Pressure Switch (BS-61-PS) Instrument Air Test Valve	UNCAPPED AND OPEN	IR 11-29-05	UNCAPPED AND OPEN	IR 11-29-05	CLOSED AND CAPPED		
IB-1	BSV-214	Reactor Building Pressure Switch (BS-26-PS) Cntnmnt Boundary Isolation Valve	CLOSED	IR 11-17-05	CLOSED	IR 11-17-05	SEALED CLOSED		
IB-1	BSV-215	Reactor Building Pressure Switch (BS-26-PS) Cntnmnt Boundary Isolation Valve	OPEN	IR 11-29-05	CLOSED	IR 11-29-05	SEALED CLOSED		
IB-1	BSV-216	RB Pressure Switch (BS-26-PS) Instrument Air Test Valve	UNCAPPED AND OPEN	IR 11-29-05	UNCAPPED AND OPEN	IR 11-29-05	CLOSED AND CAPPED		
IB-1	BSV-217	Reactor Building Pressure Switch (BS-20-PS) Cntnmnt Boundary Isolation Valve	CLOSED	IR 11-17-05	CLOSED	IR 11-17-05	SEALED CLOSED		
IB-1	BSV-218	Reactor Building Pressure Switch (BS-20-PS) Cntnmnt Boundary Isolation Valve	OPEN	IR 11-29-05	CLOSED	IR 11-29-05	SEALED CLOSED		
IB-1	BSV-219	RB Pressure Switch (BS-20-PS) Instrument Air Test Valve	UNCAPPED AND OPEN	IR 11-29-05	UNCAPPED AND OPEN	IR 11-29-05	CLOSED AND CAPPED		

ATTACHMENT 3B
ILRT VALVE LINEUPS PRIOR TO STABILIZATION

SYSTEM: RB PRESSURE SENSING & TESTING / INSTRUMENT AIR

PEN. NO.: 319, 426, 429, 442 **Drawing: FD-302-712 Sheet 1**

VALVE NO.	VALVE DESCRIPTION	VENT LINEUP	INITIAL/DATE	TEST LINEUP	INITIAL/DATE	RESTORED POSITION	TAG PULLED INITIAL/DATE	IND. VERF. INIT/DATE
BSV-212	Reactor Building Pressure Switch (BS-61-PS) Cntnmnt Boundary Isolation Valve	OPEN		CLOSED		SEALED CLOSED		
BSV-213	Reactor Building Pressure Switch (BS-61-PS) Instrument Air Test Valve	UNCAPPED AND OPEN		UNCAPPED AND OPEN	358B	CLOSED AND CAPPED		
BSV-214	Reactor Building Pressure Switch (BS-26-PS) Cntnmnt Boundary Isolation Valve	CLOSED		CLOSED		SEALED CLOSED		
BSV-215	Reactor Building Pressure Switch (BS-26-PS) Cntnmnt Boundary Isolation Valve	OPEN		CLOSED		SEALED CLOSED		
BSV-216	RB Pressure Switch (BS-26-PS) Instrument Air Test Valve	UNCAPPED AND OPEN		UNCAPPED AND OPEN		CLOSED AND CAPPED		
BSV-217	Reactor Building Pressure Switch (BS-20-PS) Cntnmnt Boundary Isolation Valve	CLOSED	12-3-5	CLOSED	12-3-5	SEALED CLOSED	12-3-5	
BSV-218	Reactor Building Pressure Switch (BS-20-PS) Cntnmnt Boundary Isolation Valve	OPEN	12-3-5	CLOSED	12-3-5	SEALED CLOSED	12-3-5	
BSV-219	RB Pressure Switch (BS-20-PS) Instrument Air Test Valve	UNCAPPED AND OPEN	12-3-5	UNCAPPED AND OPEN	12-3-5	CLOSED AND CAPPED	12-3-5	

ATTACHMENT 3B
ILRT VALVE LINEUPS PRIOR TO STABILIZATION

SYSTEM: RB PRESSURE SENSING & TESTING / INSTRUMENT AIR

PEN. NO.: 319, 426, 429, 442 **Drawing: FD-302-712 Sheet 1**

VALVE NO.	VALVE DESCRIPTION	VENT LINEUP	INITIAL/DATE	TEST LINEUP	INITIAL/DATE	RESTORED POSITION	TAG PULLED INITIAL/DATE	IND. VERF. INIT/DATE
BSV-220	Reactor Building Pressure Switch (BS-29-PS) Cntnmnt Boundary Isolation Valve	CLOSED		CLOSED		SEALED CLOSED	AG 12.5.5	α 12.5.5
BSV-221	Reactor Building Pressure Switch (BS-29-PS) Cntnmnt Boundary Isolation Valve	OPEN		CLOSED		SEALED CLOSED	AG 12.5.5	α 12.5.5
BSV-222	RB Pressure Switch (BS-29-PS) Instrument Air Test Valve	UNCAPPED AND OPEN		UNCAPPED AND OPEN		CLOSED AND CAPPED	AG 12.5.5	α 12.5.5
BSV-223	Reactor Building Pressure Switch (BS-23-PS) Cntnmnt Boundary Isolation Valve	CLOSED		CLOSED		SEALED CLOSED	AG 12.5.5	α 12.5.5
BSV-224	Reactor Building Pressure Switch (BS-23-PS) Cntnmnt Boundary Isolation Valve	OPEN		CLOSED		SEALED CLOSED	AG 12.5.5	α 12.5.5
BSV-225	Reactor Building Pressure Switch (BS-23-PS) Instrument Air Test Valve	UNCAPPED AND OPEN		UNCAPPED AND OPEN		CLOSED AND CAPPED	AG 12.5.5	α 12.5.5
IAV-729	Instrument Air Isolation Valve to Cabinet ESPSC-3B2	CLOSED		CLOSED		OPEN	AG 12.5.5	α 12.5.5
IAV-730	Instrument Air Isolation Valve to Cabinet ESPSC-3B2	CLOSED		CLOSED		OPEN	AG 12.5.5	α 12.5.5
IAV-731	Instrument Air Isolation Valve to Cabinet ESPSC-3A2	CLOSED		CLOSED		OPEN	AG 12.5.5	α 12.5.5

ATTACHMENT 3B
ILRT VALVE LINEUPS PRIOR TO STABILIZATION

SYSTEM: RB PRESSURE SENSING & TESTING / INSTRUMENT AIR

PEN. NO.: 319, 426, 429, 442 **Drawing: FD-302-712 Sheet 1**

	VALVE NO.	VALVE DESCRIPTION	VENT LINEUP	INITIAL/DATE	TEST LINEUP	INITIAL/DATE	RESTORED POSITION	TAG PULLED INITIAL/DATE	IND. VERF. INIT/DATE
IB-1	BSV-220	Reactor Building Pressure Switch (BS-29-PS) Cntnmnt Boundary Isolation Valve	CLOSED	IB 11-17-05	CLOSED	IB 11-17-05	SEALED CLOSED		
IB-1	BSV-221	Reactor Building Pressure Switch (BS-29-PS) Cntnmnt Boundary Isolation Valve	OPEN	IB 11-29-05	CLOSED	IB 11-29-05	SEALED CLOSED		
IB-1	BSV-222	RB Pressure Switch (BS-29-PS) Instrument Air Test Valve	UNCAPPED AND OPEN	IB 11-29-05	UNCAPPED AND OPEN	IB 11-29-05	CLOSED AND CAPPED		
IB-1	BSV-223	Reactor Building Pressure Switch (BS-23-PS) Cntnmnt Boundary Isolation Valve	CLOSED	IB 11-17-05	CLOSED	IB 11-17-05	SEALED CLOSED		
IB-1	BSV-224	Reactor Building Pressure Switch (BS-23-PS) Cntnmnt Boundary Isolation Valve	OPEN	IB 11-29-05	CLOSED	IB 11-29-05	SEALED CLOSED		
IB-1	BSV-225	Reactor Building Pressure Switch (BS-23-PS) Instrument Air Test Valve	UNCAPPED AND OPEN	IB 11-29-05	UNCAPPED AND OPEN	IB 11-29-05	CLOSED AND CAPPED		
IB-1	IAV-729	Instrument Air Isolation Valve to Cabinet ESPSC-3B2	CLOSED	IB 11-29-05	CLOSED	IB 11-29-05	OPEN		
IB-1	IAV-730	Instrument Air Isolation Valve to Cabinet ESPSC-3B2	CLOSED	IB 11-29-05	CLOSED	IB 11-29-05	OPEN		
IB-1	IAV-731	Instrument Air Isolation Valve to Cabinet ESPSC-3A2	CLOSED	IB 11-29-05	CLOSED	IB 11-29-05	OPEN		

ATTACHMENT 3B
ILRT VALVE LINEUPS PRIOR TO STABILIZATION

SYSTEM: RB PRESSURE SENSING & TESTING / INSTRUMENT AIR

PEN. NO.: 319, 426, 429, 442 **Drawing: FD-302-712 Sheet 1**

VALVE NO.	VALVE DESCRIPTION	VENT LINEUP	INITIAL/DATE	TEST LINEUP	INITIAL/DATE	RESTORED POSITION	TAG PULLED INITIAL/DATE	IND. VERF. INIT/DATE
IAV-732	Instrument Air Isolation Valve to Cabinet ESPSC-3A2	CLOSED		CLOSED		OPEN	AG 12.5.5	α 12.5.5
BSV-130	Pen 429 Iso.	LOCKED OPEN		LOCKED OPEN		LOCKED OPEN		
BSV-244	BS-25-PS Isolation Valve	SEALED OPEN		SEALED OPEN		SEALED OPEN		
BSV-231	BS-19-PS Isolation Valve	SEALED OPEN		SEALED OPEN		SEALED OPEN		
BSV-232	BS-22-PS Isolation Valve	SEALED OPEN		SEALED OPEN		SEALED OPEN		
BSV-249	BS-28-PS Isolation Valve	SEALED OPEN		SEALED OPEN		SEALED OPEN		
BSV-245	BS-60-PS Isolation Valve	SEALED OPEN		SEALED OPEN		SEALED OPEN		
BSV-196	Reactor Building Pressure Switch (BS-60-PS) Cntnmnt Boundary Isolation Valve	CLOSED		CLOSED		SEALED CLOSED	AG 12.5.5	α 12.5.5
BSV-197	Reactor Building Pressure Switch (BS-60-PS) Cntnmnt Boundary Isolation Valve	OPEN		CLOSED		SEALED CLOSED	AG 12.5.5	α 12.5.5
BSV-198	Reactor Building Pressure Switch (BS-60-PS) Instrument Air Test Valve	UNCAPPED AND OPEN		UNCAPPED AND OPEN		CLOSED AND CAPPED	AG 12.5.5	α 12.5.5
BSV-199	Reactor Building Pressure Switch (BS-25-PS) Cntnmnt Boundary Isolation Valve	CLOSED		CLOSED		SEALED CLOSED	AG 12.5.5	α 12.5.5

ATTACHMENT 3B
ILRT VALVE LINEUPS PRIOR TO STABILIZATION

SYSTEM: RB PRESSURE SENSING & TESTING / INSTRUMENT AIR
PEN. NO.: 319, 426, 429, 442 **Drawing: FD-302-712 Sheet 1**

	VALVE NO.	VALVE DESCRIPTION	VENT LINEUP	INITIAL/DATE	TEST LINEUP	INITIAL/DATE	RESTORED POSITION	TAG PULLED INITIAL/DATE	IND. VERF. INIT/DATE
IB-1	IAV-732	Instrument Air Isolation Valve to Cabinet ESPSC-3A2	CLOSED	IB 11-29-05	CLOSED	IB 11-29-05	OPEN		
IB-1	BSV-130	Pen 429 Iso.	LOCKED OPEN	IB 11-29-05	LOCKED OPEN	IB 11-29-05	LOCKED OPEN	81 IB 12-4-5	NA
	BSV-244	BS-25-PS Isolation Valve	SEALED OPEN	IB 11-17-05	SEALED OPEN	IB 11-17-05	SEALED OPEN		
	BSV-231	BS-19-PS Isolation Valve	SEALED OPEN	IB 11-17-05	SEALED OPEN	IB 11-17-05	SEALED OPEN		
	BSV-232	BS-22-PS Isolation Valve	SEALED OPEN	IB 11-17-05	SEALED OPEN	IB 11-17-05	SEALED OPEN		
	BSV-249	BS-28-PS Isolation Valve	SEALED OPEN	IB 11-17-05	SEALED OPEN	IB 11-17-05	SEALED OPEN		
	BSV-245	BS-60-PS Isolation Valve	SEALED OPEN	IB 11-17-05	SEALED OPEN	IB 11-17-05	SEALED OPEN	81	
	BSV-196	Reactor Building Pressure Switch (BS-60-PS) Cntnmnt Boundary Isolation Valve	CLOSED	IB 11-17-05	CLOSED	IB 11-17-05	SEALED CLOSED		
IB-1	BSV-197	Reactor Building Pressure Switch (BS-60-PS) Cntnmnt Boundary Isolation Valve	OPEN	IB 11-29-05	CLOSED	IB 11-29-05	SEALED CLOSED		
IB-1	BSV-198	Reactor Building Pressure Switch (BS-60-PS) Instrument Air Test Valve	UNCAPPED AND OPEN	IB 11-29-05	UNCAPPED AND OPEN	IB 11-29-05	CLOSED AND CAPPED		
	BSV-199	Reactor Building Pressure Switch (BS-25-PS) Cntnmnt Boundary Isolation Valve	CLOSED	IB 11-17-05	CLOSED	IB 11-17-05	SEALED CLOSED		

ATTACHMENT 3B
ILRT VALVE LINEUPS PRIOR TO STABILIZATION

SYSTEM: RB PRESSURE SENSING & TESTING / INSTRUMENT AIR

PEN. NO.: 319, 426, 429, 442 **Drawing: FD-302-712 Sheet 1**

VALVE NO.	VALVE DESCRIPTION	VENT LINEUP	INITIAL/DATE	TEST LINEUP	INITIAL/DATE	RESTORED POSITION	TAG PULLED INITIAL/DATE	IND. VERF. INIT/DATE
IAV-732	Instrument Air Isolation Valve to Cabinet ESPSC-3A2	CLOSED	1235	CLOSED	1635	OPEN	12-3-5	12505
BSV-130	Pen 429 Iso.	LOCKED OPEN		LOCKED OPEN		LOCKED OPEN		
BSV-244	BS-25-PS Isolation Valve	SEALED OPEN		SEALED OPEN		SEALED OPEN		
BSV-231	BS-19-PS Isolation Valve	SEALED OPEN		SEALED OPEN		SEALED OPEN		
BSV-232	BS-22-PS Isolation Valve	SEALED OPEN		SEALED OPEN		SEALED OPEN		
BSV-249	BS-28-PS Isolation Valve	SEALED OPEN		SEALED OPEN		SEALED OPEN		
BSV-245	BS-60-PS Isolation Valve	SEALED OPEN		SEALED OPEN		SEALED OPEN		
BSV-196	Reactor Building Pressure Switch (BS-60-PS) Cntnmnt Boundary Isolation Valve	CLOSED		CLOSED		SEALED CLOSED 35FB		
BSV-197	Reactor Building Pressure Switch (BS-60-PS) Cntnmnt Boundary Isolation Valve	OPEN		CLOSED		SEALED CLOSED		
BSV-198	Reactor Building Pressure Switch (BS-60-PS) Instrument Air Test Valve	UNCAPPED AND OPEN		UNCAPPED AND OPEN		CLOSED AND CAPPED		
BSV-199	Reactor Building Pressure Switch (BS-25-PS) Cntnmnt Boundary Isolation Valve	CLOSED		CLOSED		SEALED CLOSED		

ATTACHMENT 3B
ILRT VALVE LINEUPS PRIOR TO STABILIZATION

SYSTEM: RB PRESSURE SENSING & TESTING / INSTRUMENT AIR

PEN. NO.: 319, 426, 429, 442 **Drawing: FD-302-712 Sheet 1**

VALVE NO.	VALVE DESCRIPTION	VENT LINEUP	INITIAL/DATE	TEST LINEUP	INITIAL/DATE	RESTORED POSITION	TAG PULLED INITIAL/DATE	IND. VERF. INIT/DATE
BSV-200	Reactor Building Pressure Switch (BS-25-PS) Cntnmnt Boundary Isolation Valve	OPEN		CLOSED		SEALED CLOSED	AG 12.5.5	α 12.5.5
BSV-201	RB Pressure Switch (BS-25-PS) Instrument Air Test Valve	UNCAPPED AND OPEN		UNCAPPED AND OPEN		CLOSED AND CAPPED	AG 12.5.5	α 12.5.5
BSV-202	Reactor Building Pressure Switch (BS-19-PS) Cntnmnt Boundary Isolation Valve	CLOSED		CLOSED		SEALED CLOSED	AG 12.5.5	α 12.5.5
BSV-203	Reactor Building Pressure Switch (BS-19-PS) Cntnmnt Boundary Isolation Valve	OPEN		CLOSED		SEALED CLOSED	AG 12.5.5	α 12.5.5
BSV-204	RB Pressure Switch (BS-19-PS) Instrument Air Test Valve	UNCAPPED AND OPEN		UNCAPPED AND OPEN		CLOSED AND CAPPED	AG 12.5.5	α 12.5.5
BSV-205	Reactor Building Pressure Switch (BS-28-PS) Cntnmnt Boundary Isolation Valve	CLOSED		CLOSED		SEALED CLOSED	AG 12.5.5	α 12.5.5
BSV-206	Reactor Building Pressure Switch (BS-28-PS) Cntnmnt Boundary Isolation Valve	OPEN		CLOSED		SEALED CLOSED	AG 12.5.5	α 12.5.5
BSV-207	RB Pressure Switch (BS-28-PS) Instrument Air Test Valve	UNCAPPED AND OPEN		UNCAPPED AND OPEN		CLOSED AND CAPPED	AG 12.5.5	α 12.5.5

ATTACHMENT 3B
ILRT VALVE LINEUPS PRIOR TO STABILIZATION

SYSTEM: RB PRESSURE SENSING & TESTING / INSTRUMENT AIR

PEN. NO.: 319, 426, 429, 442 **Drawing: FD-302-712 Sheet 1**

	VALVE NO.	VALVE DESCRIPTION	VENT LINEUP	INITIAL/DATE	TEST LINEUP	INITIAL/DATE	RESTORED POSITION	TAG PULLED INITIAL/DATE	IND. VERF. INIT/DATE
IB-1	BSV-200	Reactor Building Pressure Switch (BS-25-PS) Cntnmnt Boundary Isolation Valve	OPEN	IB 11-29-05	CLOSED	IB 11-29-05	SEALED CLOSED		
IB-1	BSV-201	RB Pressure Switch (BS-25-PS) Instrument Air Test Valve	UNCAPPED AND OPEN	IB 11-29-05	UNCAPPED AND OPEN	IB 11-29-05	CLOSED AND CAPPED		
IB-1	BSV-202	Reactor Building Pressure Switch (BS-19-PS) Cntnmnt Boundary Isolation Valve	CLOSED	IB 11-17-05	CLOSED	IB 11-17-05	SEALED CLOSED		
IB-1	BSV-203	Reactor Building Pressure Switch (BS-19-PS) Cntnmnt Boundary Isolation Valve	OPEN	IB 11-29-05	CLOSED	IB 11-29-05	SEALED CLOSED		
IB-1	BSV-204	RB Pressure Switch (BS-19-PS) Instrument Air Test Valve	UNCAPPED AND OPEN	IB 11-29-05	UNCAPPED AND OPEN	IB 11-29-05	CLOSED AND CAPPED		
IB-1	BSV-205	Reactor Building Pressure Switch (BS-28-PS) Cntnmnt Boundary Isolation Valve	CLOSED	IB 11-17-05	CLOSED	IB 11-17-05	SEALED CLOSED		
IB-1	BSV-206	Reactor Building Pressure Switch (BS-28-PS) Cntnmnt Boundary Isolation Valve	OPEN	IB 11-29-05	CLOSED	IB 11-29-05	SEALED CLOSED		
IB-1	BSV-207	RB Pressure Switch (BS-28-PS) Instrument Air Test Valve	UNCAPPED AND OPEN	IB 11-29-05	UNCAPPED AND OPEN	IB 11-29-05	CLOSED AND CAPPED		

ATTACHMENT 3B
ILRT VALVE LINEUPS PRIOR TO STABILIZATION

SYSTEM: RB PRESSURE SENSING & TESTING / INSTRUMENT AIR
PEN. NO.: 319, 426, 429, 442 **Drawing: FD-302-712 Sheet 1**

VALVE NO.	VALVE DESCRIPTION	VENT LINEUP	INITIAL/DATE	TEST LINEUP	INITIAL/DATE	RESTORED POSITION	TAG PULLED INITIAL/DATE	IND. VERF. INIT/DATE
BSV-200	Reactor Building Pressure Switch (BS-25-PS) Cntnmnt Boundary Isolation Valve	OPEN		CLOSED	358B	SEALED CLOSED		
BSV-201	RB Pressure Switch (BS-25-PS) Instrument Air Test Valve	UNCAPPED AND OPEN		UNCAPPED AND OPEN		CLOSED AND CAPPED		
BSV-202	Reactor Building Pressure Switch (BS-19-PS) Cntnmnt Boundary Isolation Valve	CLOSED	12-3-5	CLOSED ✓	12-3-5	SEALED CLOSED	12-3-5	
BSV-203	Reactor Building Pressure Switch (BS-19-PS) Cntnmnt Boundary Isolation Valve	OPEN	12-3-5	CLOSED ✓	12-3-5	SEALED CLOSED	12-3-5	
BSV-204	RB Pressure Switch (BS-19-PS) Instrument Air Test Valve	UNCAPPED AND OPEN	12-3-5	UNCAPPED AND OPEN	12-3-5	CLOSED AND CAPPED	12-3-5	
BSV-205	Reactor Building Pressure Switch (BS-28-PS) Cntnmnt Boundary Isolation Valve	CLOSED		CLOSED	358B	SEALED CLOSED		
BSV-206	Reactor Building Pressure Switch (BS-28-PS) Cntnmnt Boundary Isolation Valve	OPEN		CLOSED		SEALED CLOSED		
BSV-207	RB Pressure Switch (BS-28-PS) Instrument Air Test Valve	UNCAPPED AND OPEN		UNCAPPED AND OPEN		CLOSED AND CAPPED		

ATTACHMENT 3B
ILRT VALVE LINEUPS PRIOR TO STABILIZATION

SYSTEM: RB PRESSURE SENSING & TESTING / INSTRUMENT AIR

PEN. NO.: 319, 426, 429, 442 **Drawing: FD-302-712 Sheet 1**

VALVE NO.	VALVE DESCRIPTION	VENT LINEUP	INITIAL/DATE	TEST LINEUP	INITIAL/DATE	RESTORED POSITION	TAG PULLED INITIAL/DATE	IND. VERF. INIT/DATE
BSV-208	Reactor Building Pressure Switch (BS-22-PS) Cntnmnt Boundary Isolation Valve	CLOSED		CLOSED		SEALED CLOSED	AG 12.5.5	α 12.5.5
BSV-209	Reactor Building Pressure Switch (BS-22-PS) Cntnmnt Boundary Isolation Valve	OPEN		CLOSED		SEALED CLOSED	AG 12.5.5	α 12.5.5
BSV-210	RB Pressure Switch (BS-22-PS) Instrument Air Test Valve	UNCAPPED AND OPEN		UNCAPPED AND OPEN		CLOSED AND CAPPED	AG 12.5.5	α 12.5.5
IAV-737	Instrument Air Isolation Valve to Cabinet ESPSC-3A4	CLOSED		CLOSED		OPEN	AG 12.5.5	α 12.5.5
BSV-132	Pen 319 Iso.	LOCKED OPEN		LOCKED OPEN		LOCKED OPEN		
BSV-61	BS-16-PT Iso.	LOCKED OPEN		LOCKED OPEN		LOCKED OPEN		
BSV-235	BS-62-PS Isolation Valve	SEALED OPEN		SEALED OPEN		SEALED OPEN		
BSV-251	Isolation Valve for BS-16-PT	SEALED OPEN		SEALED OPEN		SEALED OPEN		
BSV-253	Isolation Valve for BS-90-PT	SEALED OPEN		SEALED OPEN		SEALED OPEN		
BSV-239	BS-90-PT Test Valve	SEALED CLOSED AND CAPPED		SEALED CLOSED AND CAPPED		SEALED CLOSED AND CAPPED		
BSV-240	BS-16-PT Test Valve	CLOSED AND CAPPED		CLOSED AND CAPPED		SEALED CLOSED AND CAPPED	AG 12.5.5	α 12.5.5
BSV-226	Reactor Building Pressure Switch (BS-62-PS) Cntnmnt Boundary Isolation Valve	CLOSED		CLOSED		SEALED CLOSED	AG 12.5.5	α 12.5.5

ATTACHMENT 3B
ILRT VALVE LINEUPS PRIOR TO STABILIZATION

SYSTEM: RB PRESSURE SENSING & TESTING / INSTRUMENT AIR

PEN. NO.: 319, 426, 429, 442 **Drawing: FD-302-712 Sheet 1**

	VALVE NO.	VALVE DESCRIPTION	VENT LINEUP	INITIAL/DATE	TEST LINEUP	INITIAL/DATE	RESTORED POSITION	TAG PULLED INITIAL/DATE	IND. VERF. INIT/DATE
IB-1	BSV-208	Reactor Building Pressure Switch (BS-22-PS) Cntnmnt Boundary Isolation Valve	CLOSED	IB 11-17-05	CLOSED	IB 11-17-05	SEALED CLOSED		
IB-1	BSV-209	Reactor Building Pressure Switch (BS-22-PS) Cntnmnt Boundary Isolation Valve	OPEN	IB 11-29-05	CLOSED	IB 11-29-05	SEALED CLOSED		
IB-1	BSV-210	RB Pressure Switch (BS-22-PS) Instrument Air Test Valve	UNCAPPED AND OPEN	IB 11-29-05	UNCAPPED AND OPEN	IB 11-29-05	CLOSED AND CAPPED		
AB-7	IAV-737	Instrument Air Isolation Valve to Cabinet ESPSC-3A4	CLOSED	IB 11-29-05	CLOSED	IB 11-29-05	OPEN		
AB-7	BSV-132	Pen 319 Iso.	LOCKED OPEN	IB 11-17-05	LOCKED OPEN	IB 11-17-05	LOCKED OPEN	(8) AB 12-9-05	NA
AB-7	BSV-61	BS-16-PT Iso.	LOCKED OPEN	IB 11-17-05	LOCKED OPEN	IB 11-17-05	LOCKED OPEN		
AB-7	BSV-235	BS-62-PS Isolation Valve	SEALED OPEN	IB 11-17-05	SEALED OPEN	IB 11-17-05	SEALED OPEN		
AB-7	BSV-251	Isolation Valve for BS-16-PT	SEALED OPEN	IB 11-17-05	SEALED OPEN	IB 11-17-05	SEALED OPEN		
AB-7	BSV-253	Isolation Valve for BS-90-PT	SEALED OPEN	IB 11-17-05	SEALED OPEN	IB 11-17-05	SEALED OPEN		
AB-7	BSV-239	BS-90-PT Test Valve	SEALED CLOSED AND CAPPED	IB 11-17-05	SEALED CLOSED AND CAPPED	IB 11-17-05	SEALED CLOSED AND CAPPED	(8)	
AB-7	BSV-240	BS-16-PT Test Valve	CLOSED AND CAPPED	IB 11-17-05	CLOSED AND CAPPED	IB 11-17-05	SEALED CLOSED AND CAPPED		
AB-7	BSV-226	Reactor Building Pressure Switch (BS-62-PS) Cntnmnt Boundary Isolation Valve	CLOSED	IB 11-17-05	CLOSED	IB 11-17-05	SEALED CLOSED		

ATTACHMENT 3B
ILRT VALVE LINEUPS PRIOR TO STABILIZATION

SYSTEM: RB PRESSURE SENSING & TESTING / INSTRUMENT AIR

PEN. NO.: 319, 426, 429, 442 **Drawing: FD-302-712 Sheet 1**

VALVE NO.	VALVE DESCRIPTION	VENT LINEUP	INITIAL/DATE	TEST LINEUP	INITIAL/DATE	RESTORED POSITION	TAG PULLED INITIAL/DATE	IND. VERF. INIT/DATE
BSV-227	Reactor Building Pressure Switch (BS-62-PS) Cntnmnt Boundary Isolation Valve	OPEN		CLOSED		SEALED CLOSED	DG 12.5.5	α 12.5.5
BSV-228	Reactor Building Pressure Switch (BS-62-PS) Instrument Air Test Valve	UNCAPPED AND OPEN		UNCAPPED AND OPEN		CLOSED AND CAPPED	DG 12.5.5	α 12.5.5

ATTACHMENT 3B
ILRT VALVE LINEUPS PRIOR TO STABILIZATION

SYSTEM: RB PRESSURE SENSING & TESTING / INSTRUMENT AIR

PEN. NO.: 319, 426, 429, 442 **Drawing: FD-302-712 Sheet 1**

	VALVE NO.	VALVE DESCRIPTION	VENT LINEUP	INITIAL/DATE	TEST LINEUP	INITIAL/DATE	RESTORED POSITION	TAG PULLED INITIAL/DATE	IND. VERF. INIT/DATE
AG-7	BSV-227	Reactor Building Pressure Switch (BS-62-PS) Cntnmnt Boundary Isolation Valve	OPEN	IR 11-29-05	CLOSED	IR 11-29-05	SEALED CLOSED		
AG-7	BSV-228	Reactor Building Pressure Switch (BS-62-PS) Instrument Air Test Valve	UNCAPPED AND OPEN	IR 11-29-05	UNCAPPED AND OPEN	IR 11-29-05	CLOSED AND CAPPED		

ATTACHMENT 3B
ILRT VALVE LINEUPS PRIOR TO STABILIZATION

SYSTEM: LEAK RATE & POST ACCIDENT HYDROGEN PURGE
PEN. NO.: 116,121,122,125,202,305,306 **Dwg.:FD-302-722, Sht. 1**

VALVE NO.	VALVE DESCRIPTION	PEN #	LOCATION	TEST LINEUP	INITIAL/DATE	RESTORED POSITION	TAG PULLED INITIAL/DATE	IND. VERF. INIT/DATE
LRV-35	Discharge Iso	122		CLOSED Locked	A6 11.18.5	LOCKED CLOSED	12.5.05	12-5-05
LRV-47	PA H2 Purge	122		CLOSED locked	A6 11.18.5	LOCKED CLOSED	12.5.05	12-5-05
LRV-51	Discharge Iso	122		CLOSED	A6 11.18.5	CLOSED	(88) 12-4-5	NA
LRV-57	Discharge Drain	122		CLOSED Sealed & capped	A6 11.18.5	SEALED CLOSED AND CAPPED	12-5-05	12-5-05
LRV-37	Supply Line Vent	121		CLOSED Sealed & capped	A6 11.18.5	SEALED CLOSED AND CAPPED	12-5-05	12-5-05
LRV-52	PA H2 Purge	122		CLOSED	A6 11.18.5	CLOSED	(88) 12-4-5	NA
LRV-38	Discharge Iso	122		CLOSED	A6 11.18.5	CLOSED	(88)	NA
LRV-49	Discharge Iso	122		CLOSED	A6 11.18.5	CLOSED	(88)	NA
LRV-46*	Flowmeter Inlet	116		CLOSED* sealed	A6 11.18.5	SEALED CLOSED	12-5-05	12-5-05
LRV-88	H2 Recombiner Iso	122		CLOSED locked	A6 11.18.5	LOCKED CLOSED	12-5-05	12-5-05
LRV-90	H2 Recombiner Iso	121		CLOSED locked	A6 11.18.5	LOCKED CLOSED	12-5-05	12-5-05
LRV-64	Flowmeter Inlet Control	116		CLOSED	A6 11.18.5	CLOSED	(87) 12-4-5	NA
LRV-92	H2 Recombiner Iso	125		CLOSED locked	A6 11.18.5	LOCKED CLOSED	12-5-05	12-5-05
LRV-65	Flowmeter Inlet Control	116		CLOSED	A6 11.18.5	CLOSED	(87) 12-4-5	NA
LRV-94	H2 Recombiner Iso	125		CLOSED locked	A6 11.18.5	LOCKED CLOSED	12-5-05	12-5-05
MCB LRV-70	PA H2 Purge Filter Iso	306		CLOSED	12/3/05	CLOSED	12/5/05	12/5/05
IB-119 CAV-415	RB Atmos Sample	116	IB 119 SINGLE DOOR	CLOSED*	11.29.5	CLOSED	12-5-05	12-5-05
IB-119 CAV-417	RB Atmos Sample	116	IB 119 SINGLE DOOR	CLOSED	11.29.5	CLOSED	12-5-05	12-5-05
MCB LRV-71	PA H2 Purge Filter Iso	306		CLOSED	12/3/05	CLOSED	12/5/05	12/5/05
MCB LRV-72	PA H2 Purge Filter Iso	305		CLOSED	12/3/05	CLOSED	12/5/05	12/5/05
MCB LRV-73	PA H2 Purger Filter Iso	305		CLOSED	12/3/05	CLOSED	12/5/05	12/5/05

ATTACHMENT 3B
ILRT VALVE LINEUPS PRIOR TO STABILIZATION

SYSTEM: LEAK RATE & POST ACCIDENT HYDROGEN PURGE
PEN. NO.: 116,121,122,125,202,305,306 **Dwg.:FD-302-722, Sht. 1**

VALVE NO.	VALVE DESCRIPTION	PEN #	LOCATION	TEST LINEUP	INITIAL/DATE	RESTORED POSITION	TAG PULLED INITIAL/DATE	IND. VERF. INIT/DATE
LRV-35	Discharge Iso	122		CLOSED		LOCKED CLOSED	AG 12-5-5	
LRV-47	PA H2 Purge	122		CLOSED		LOCKED CLOSED	AG 12-5-5	
LRV-51	Discharge Iso	122		CLOSED		CLOSED		
LRV-57	Discharge Drain	122		CLOSED		SEALED CLOSED AND CAPPED	AG 12-5-5	
LRV-37	Supply Line Vent	121		CLOSED		SEALED CLOSED AND CAPPED	AG 12-5-5	
LRV-52	PA H2 Purge	122		CLOSED		CLOSED		
LRV-38	Discharge Iso	122		CLOSED		CLOSED		
LRV-49	Discharge Iso	122		CLOSED		CLOSED		
LRV-46*	Flowmeter Inlet	116		CLOSED*		SEALED CLOSED	AG 12-5-5	W 12-5-5
LRV-88	H2 Recombiner Iso	122		CLOSED		LOCKED CLOSED	W 12-5-5	AG 12-5-5
LRV-90	H2 Recombiner Iso	121		CLOSED		LOCKED CLOSED	W 12-5-5	AG 12-5-5
LRV-64	Flowmeter Inlet Control	116		CLOSED		CLOSED		
LRV-92	H2 Recombiner Iso	125		CLOSED		LOCKED CLOSED	W 12-5-5	AG 12-5-5
LRV-65	Flowmeter Inlet Control	116		CLOSED		CLOSED		
LRV-94	H2 Recombiner Iso	125		CLOSED		LOCKED CLOSED	W 12-5-5	AG 12-5-5
LRV-70	PA H2 Purge Filter Iso	306		CLOSED		CLOSED		
CAV-415	RB Atmos Sample	116		CLOSED*		CLOSED		
CAV-417	RB Atmos Sample	116		CLOSED		CLOSED		
LRV-71	PA H2 Purge Filter Iso	306		CLOSED		CLOSED		
LRV-72	PA H2 Purge Filter Iso	305		CLOSED		CLOSED		
LRV-73	PA H2 Purger Filter Iso	305		CLOSED		CLOSED		

ATTACHMENT 3B
ILRT VALVE LINEUPS PRIOR TO STABILIZATION

SYSTEM: LEAK RATE & POST ACCIDENT HYDROGEN PURGE

PEN. NO.: 116,121,122,125,202,305,306 **Dwg.:FD-302-722, Sht. 1**

VALVE NO.	VALVE DESCRIPTION	PEN #	LOCATION	TEST LINEUP	INITIAL/DATE	RESTORED POSITION	TAG PULLED INITIAL/DATE	IND. VERF. INIT/DATE
LRV-36	Supply Iso	121		LOCKED CLOSED		LOCKED CLOSED	AG 12-5-5	JR 12-5-05
LRV-50	Supply Iso	121		LOCKED CLOSED		LOCKED CLOSED	AG 12-5-5	JR 12-5-05
LRV-98	Test & Drain	122		OPEN & UNCAPPED		CLOSED & CAPPED	W 12-5-5	AG 12-5-5
LRV-100	Test & Drain	121		OPEN & UNCAPPED		CLOSED & CAPPED	W 12-5-5	AG 12-5-5
LRV-102	Test & Drain	125		OPEN & UNCAPPED		CLOSED & CAPPED	W 12-5-5	AG 12-5-5
LRV-104	Test & Drain	125		OPEN & UNCAPPED		CLOSED & CAPPED	W 12-5-5	AG 12-5-5
LRV-87	H2 Recombiner Iso	122		CLOSED		LOCKED CLOSED	W 12-5-5	AG 12-5-5
LRV-89	H2 Recombiner Iso	121		LOCKED CLOSED		LOCKED CLOSED	W 12-5-5	AG 12-5-5
LRV-91	H2 Recombiner Iso	125		LOCKED CLOSED		LOCKED CLOSED	W 12-5-5	AG 12-5-5
LRV-93	H2 Recombiner Iso	125		LOCKED CLOSED		LOCKED CLOSED	W 12-5-5	AG 12-5-5
LRV-121	H2 Purge Iso	305/ 306		OPEN		CLOSED	W 12-5-5	JR 12-5-05
LRV-123	H2 Purge Iso	305 /306		OPEN		CLOSED	W 12-5-5	JR 12-5-05

*May be opened for RB air sample.

ATTACHMENT 3B
ILRT VALVE LINEUPS PRIOR TO STABILIZATION

SYSTEM: LEAK RATE & POST ACCIDENT HYDROGEN PURGE
PEN. NO.: 116,121,122,125,202,305,306 **Dwg.:FD-302-722, Sht. 1**

	VALVE NO.	VALVE DESCRIPTION	PEN #	LOCATION	TEST LINEUP	INITIAL/DATE	RESTORED POSITION	TAG PULLED INITIAL/DATE	IND. VERF. INIT/DATE
1B-119	LRV-36	Supply Iso	121		LOCKED CLOSED	AG 11.18.5	LOCKED CLOSED		
1B-119	LRV-50	Supply Iso	121		LOCKED CLOSED	AG 11.18.5	LOCKED CLOSED		
1B-119	LRV-98	Test & Drain	122		OPEN & UNCAPPED	11.29.5	CLOSED & CAPPED		
1B-119	LRV-100	Test & Drain	121		OPEN & UNCAPPED	11.29.5	CLOSED & CAPPED		
1B-119	LRV-102	Test & Drain	125		OPEN & UNCAPPED	11.29.5	CLOSED & CAPPED		
1B-119	LRV-104	Test & Drain	125		OPEN & UNCAPPED	11.29.5	CLOSED & CAPPED		
1B-119	LRV-87	H2 Recombiner Iso	122		CLOSED locked	AG 11.18.5	LOCKED CLOSED		
1B-119	LRV-89	H2 Recombiner Iso	121		LOCKED CLOSED	AG 11.18.5	LOCKED CLOSED		
1B119	LRV-91	H2 Recombiner Iso	125		LOCKED CLOSED	AG 11.18.5	LOCKED CLOSED		
1B119	LRV-93	H2 Recombiner Iso	125		LOCKED CLOSED	AG 11.18.5	LOCKED CLOSED		
AB-30	LRV-121	H2 Purge Iso	305/ 306		OPEN	12/2/5	CLOSED	12-5-05	12-5-05
AB-30	LRV-123	H2 Purge Iso	305 /306		OPEN	12/2/5	CLOSED	12-5-05	12-5-05

*May be opened for RB air sample.

ATTACHMENT 3B
ILRT VALVE LINEUPS PRIOR TO STABILIZATION

SYSTEM: INDUSTRIAL COOLER
PEN. NO.: 206,207,366,367

	VALVE NO.	VALVE DESCRIPTION	VENT LINEUP	INITIAL/DATE	TEST LINEUP	INITIAL/DATE	RESTORED POSITION	TAG PULLED INITIAL/DATE	IND. VERF. INIT/DATE
AB-7	CIV-89	Pen 367 Drain & Test	OPEN & UNCAPPED	115	CLOSED & CAPPED	12-2-05	SEALED CLOSED & CAPPED	12.5.5	12/5/5
AB-7	CIV-86	Pen 366 Drain & Test	OPEN & UNCAPPED	115	CLOSED & CAPPED	12-2-05	SEALED CLOSED & CAPPED	12.5.5	12/5/5
AB-17C	CIV-93	Pen 207 Drain & Test	OPEN & UNCAPPED	115	CLOSED & CAPPED	12-2-05	SEALED CLOSED & CAPPED	12-5-05	12-5-05
AB-17C	CIV-87	Pen 206 Drain & Test	OPEN & UNCAPPED	115	CLOSED & CAPPED	12-2-05	SEALED CLOSED & CAPPED	12-5-05	12-5-05

*Open if associated cavity pump is in service.

115 Liquid system, no depressurization required. 12-2-05
TMA 12-2-05

ATTACHMENT 3C
SPECIAL ILRT VALVE LINEUPS

SYSTEM: INSTRUMENT & STATION SERVICE AIR

PEN. NO.: 110,111, 112

VALVE NO.	VALVE DESCRIPTION	VENT LINEUP	INITIAL/DATE	TEST LINEUP	INITIAL/DATE	RESTORED POSITION	TAG PULLED INITIAL/DATE	IND. VERF. INIT/DATE
RG-4 IAV-77	IA to RB Spray Iso	CLOSED	11.16.5	CLOSED	11.16.5	CLOSED	AS 12-4-5	NA
IAV-62	IA to RB Spray Iso	CLOSED	12.3.5	CLOSED	12.3.5	LOCKED CLOSED		
IAV-16	Turb Bldg Loop Iso	CLOSED	12.3.5	CLOSED	12.3.5	OPEN		
RG-4 IAV-90	IA to RB Spray Iso	CLOSED	11.16.5	CLOSED	11.16.5	CLOSED	AS 12-4-5	NA
IAV-61	IA to RB Spray Iso	CLOSED	12.3.5	CLOSED	12.3.5	LOCKED CLOSED		
IAV-28	IA to RB Spray Iso	UNLOCKED OPEN	12.3.5	CLOSED	12.3.5	LOCKED CLOSED		
IAV-29	IA to RB Spray Iso	UNLOCKED OPEN	12.3.5	CLOSED	12.3.5	LOCKED CLOSED		
IAV-360	Dirt Trap	OPEN & UNCAPPED	12.3.5	OPEN & UNCAPPED	12.3.5	CLOSED & CAPPED		
IAV-361	Dirt Trap	OPEN & UNCAPPED	12.3.5	OPEN & UNCAPPED	12.3.5	CLOSED & CAPPED		
RG-1 IAV-364	Dirt Trap	OPEN	12.3.5	OPEN	12.3.5	CLOSED	12-5-05	12-5-05
RG-1 IAV-365	Dirt Trap	OPEN	12.3.5	OPEN	12.3.5	CLOSED	12-5-05	12-5-05
IAV-362	Pen 111 Drain & Test	CLOSED & CAPPED	12.3.5	CLOSED & CAPPED	12.3.5	SEALED CLOSED & CAPPED		
IAV-363	Pen 112 Drain & Test	CLOSED & CAPPED	12.3.5	CLOSED & CAPPED	12.3.5	SEALED CLOSED & CAPPED		
leaks by SAV-128	Turb Bldg Loop Iso	CLOSED	12/3/5	CLOSED	12/3/5	CLOSED	AS 12-4-5	NA
CAV-416	RB Atmos Sample Station Iso	CLOSED		CLOSED*	12/3/05	CLOSED		
RG-4 SAV-21	SA to RB Iso	OPEN	11-16-05	OPEN	11-16-05	OPEN	AS 12-4-5	NA
SAV-130	SA to RB Sample Station	CLOSED	12-3-05	CLOSED	12-3-05	CLOSED	12-5-05	12-5-05
SAV-61	Pen 110 Drain & Test	CLOSED & CAPPED	12-3-05	CLOSED & CAPPED	12-3-05	SEALED CLOSED & CAPPED		
SAV-24	SA to RB Iso	UNLOCKED & OPEN	12-3-05	UNLOCKED CLOSED*	12-3-05	LOCKED CLOSED		
SAV-23	SA to RB Iso	UNLOCKED & OPEN	12-3-05	CLOSED (once vented)	12-3-05	LOCKED CLOSED		
IAV-293	IA Dirt Trap	OPEN	12-3-05	OPEN	12-3-05	CLOSED		
SAV-122	SA to RB Sample Sta Iso	UNLOCKED & OPEN	12-3-05	UNLOCKED CLOSED*	12-3-05	LOCKED CLOSED		
SAV-131	SA Vent	OPEN	12-3-05	OPEN	12-3-05	CLOSED	12-5-05	12-5-05

ATTACHMENT 3C
SPECIAL ILRT VALVE LINEUPS

SYSTEM: INSTRUMENT & STATION SERVICE AIR

PEN. NO.: 110,111, 112

VALVE NO.	VALVE DESCRIPTION	VENT LINEUP	INITIAL/DATE	TEST LINEUP	INITIAL/DATE	RESTORED POSITION	TAG PULLED INITIAL/DATE	IND. VERF. INIT/DATE
IAV-77	IA to RB Spray Iso	CLOSED		CLOSED		CLOSED		
IAV-62	IA to RB Spray Iso	CLOSED		CLOSED		LOCKED CLOSED		
IAV-16	Turb Bldg Loop Iso	CLOSED		CLOSED		OPEN		
IAV-90	IA to RB Spray Iso	CLOSED		CLOSED		CLOSED		
IAV-61	IA to RB Spray Iso	CLOSED		CLOSED		LOCKED CLOSED		
IAV-28	IA to RB Spray Iso	UNLOCKED OPEN		CLOSED		LOCKED CLOSED		
IAV-29	IA to RB Spray Iso	UNLOCKED OPEN		CLOSED		LOCKED CLOSED		
IAV-360	Dirt Trap	OPEN & UNCAPPED		OPEN & UNCAPPED		CLOSED & CAPPED		
IAV-361	Dirt Trap	OPEN & UNCAPPED		OPEN & UNCAPPED		CLOSED & CAPPED		
IAV-364	Dirt Trap	OPEN		OPEN		CLOSED		
IAV-365	Dirt Trap	OPEN		OPEN		CLOSED		
IAV-362	Pen 111 Drain & Test	CLOSED & CAPPED		CLOSED & CAPPED		SEALED CLOSED & CAPPED		
IAV-363	Pen 112 Drain & Test	CLOSED & CAPPED		CLOSED & CAPPED		SEALED CLOSED & CAPPED		
SAV-128	Turb Bldg Loop Iso	CLOSED		CLOSED		CLOSED		
CAV-416	RB Atmos Sample Station Iso	CLOSED		CLOSED*		CLOSED		
SAV-21	SA to RB Iso	OPEN		OPEN		OPEN		
SAV-130	SA to RB Sample Station	CLOSED		CLOSED		CLOSED		
SAV-61	Pen 110 Drain & Test	CLOSED & CAPPED		CLOSED & CAPPED		SEALED CLOSED & CAPPED		
SAV-24	SA to RB Iso	UNLOCKED & OPEN		UNLOCKED CLOSED*		LOCKED CLOSED		
SAV-23	SA to RB Iso	UNLOCKED & OPEN		CLOSED (once vented)		LOCKED CLOSED		
IAV-293	IA Dirt Trap	OPEN		OPEN		CLOSED		
SAV-122	SA to RB Sample Sta Iso	UNLOCKED & OPEN		UNLOCKED CLOSED*		LOCKED CLOSED		
SAV-131	SA Vent	OPEN		OPEN		CLOSED		

ATTACHMENT 3C
SPECIAL ILRT VALVE LINEUPS

SYSTEM: INSTRUMENT & STATION SERVICE AIR
PEN. NO.: 110,111, 112

VALVE NO.	VALVE DESCRIPTION	VENT LINEUP	INITIAL/DATE	TEST LINEUP	INITIAL/DATE	RESTORED POSITION	TAG PULLED INITIAL/DATE	IND. VERF. INIT/DATE
(1) SAV-418	RB Service Air Receptacle	OPEN	BJJ 12/3/5	OPEN	BJJ 12/3/5	CLOSED	TCS 12/5/5	12-5-05
IB-5 SAV-69	SA to PAL Seal Iso	CLOSED	11-18-05	CLOSED	BJJ 12/3/5	SEALED CLOSED	12-5-05	12-5-05
SAV-71	SA to EAL Seal Iso	CLOSED	BJJ 12/3/5	CLOSED	BJJ 12/3/5	SEALED CLOSED	12-5-05	12-5-05
SAV-73	SA to EH Seal Iso	CLOSED	BJJ 12/3/5	CLOSED	BJJ 12/3/5	SEALED CLOSED	12-5-05	12-5-05
SAV-70	SA to EAL Seal Iso	CLOSED	BJJ 12/3/5	CLOSED	BJJ 12/3/5	CLOSED	12-5-05	12-5-05
IB-5 SAV-45	SA to PAL Seal Iso	CLOSED	11-18-05	CLOSED	BJJ 12/3/5	CLOSED	12-5-05	12-5-05
SAV-46	SA to EAL Seal Iso	CLOSED	BJJ 12/3/5	CLOSED (117)	~~BJJ 12/3/5~~	OPEN BJJ	(117)	(117)
SAV-601	SA to PAL O.D. Seal	OPEN	SW 12-3-5	OPEN	~~12-3-5~~	OPEN	12-5-05	12-5-05
SAV-602	SA to PAL I.D. Seal	OPEN	SW 12-3-5	CLOSED	~~12-3-5~~	OPEN	12-5-05	12-5-05
SAV-603	SA to EAL O.D. Seal	OPEN	12/12/05	OPEN	12-3-05	OPEN	12-5-05	12-5-05
SAV-604	SA to EAL I.D. Seal	OPEN	12/12/05	CLOSED	12-3-05	OPEN	12-5-05	12-5-05
SAV-78	SA to EH Seal	OPEN	12-3-05	OPEN	12-3-05	SEALED CLOSED	12-5-05	12-5-05
SAV-77**	EH Seal Test	OPEN	12-3-05	OPEN	12-3-05	SEALED CLOSED & CAPPED	12-5-05	12-5-05
IB-5 SAV-64	PAL Seal Vent	OPEN	12-3-05	OPEN	12-3-05	CLOSED	12-5-05	12-5-05
SAV-65	EAL Seal Vent	OPEN	12-3-05	OPEN	12-3-05	CLOSED	12-5-05	12-5-05
SAV-68	EH Seal Vent	OPEN UNCAPPED	12-3-05	OPEN UNCAPPED	12-3-05	CLOSED	12-5-05	12-5-05

*May be opened for air sample
**Pressure gauge installed
(1) Record selected valve number

(117) WR 218999 was written due to SAV-46 being difficult to close. SAV-46 is closed.
BJJ 12/03/05

ATTACHMENT 3C
SPECIAL ILRT VALVE LINEUPS

SYSTEM: NITROGEN
PEN. NO.: 317,355,372 **Dwg.: FD-302-011 Sht.s 2, 4; FD-302-673 Sht. 4**

	VALVE NO.	VALVE DESCRIPTION	VENT LINEUP	INITIAL/DATE	TEST LINEUP	INITIAL/DATE	RESTORED POSITION	TAG PULLED INITIAL/DATE	IND. VERF. INIT/DATE
RB-2	NGV-89	N2 Supply to RCDT	CLOSED	11-17-05	CLOSED	11-30-5	OPEN	12-5-05	12-5-05
RB-4	NGV-193	N2 Supply to RCSG-1B	CLOSED	11-16-05	CLOSED	11-16-05	CLOSED	(8) 12-5	NA
	CSV-38	N2 Supply to RCSG-1B	CLOSED	11-30-5	CLOSED	11-30-5	CLOSED	(8) 12-5	NA
RB-4	NGV-64	N2 Supply to RCSG-1A	CLOSED	11-16-5	CLOSED	11-16-5	SEALED CLOSED	12-5-05	12-5-05
RB-4	NGV-194	N2 Supply to RCSG-1A	CLOSED	(A-93)	CLOSED	(A-93)	CLOSED	(A-93)	(A-93)
RB-16	NGV-275	N2 Supply to RCSG-1B	CLOSED	11-16-5	CLOSED	11-16-5	CLOSED	(8)	NA
RB-16	NGV-278	N2 Supply to Press	CLOSED	11-16-05	CLOSED	11-16-05	CLOSED	(8)	
	NGV-281	N2 Supply to RCSG-1A	CLOSED	11-16-05	CLOSED	11-16-05	CLOSED	(8)	
RB-2	NGV-8	N2 to RB Iso	CLOSED	(A-93)	CLOSED	(A-93)	CLOSED	(8)	
RB-2	NGV-92	NG-78-PI Iso	OPEN	11-17-05	OPEN	11-17-05	OPEN	(8)	
RB-2	NG-78-PI	Pressure Gauge	(**REMOVED)	11-30-5	INSTALLED	11-30-5	INSTALLED	(8)	
RB-2	NGV-93	N2 Iso to RCDT	OPEN	11-30-5	CLOSED SEALED	11-30-5	SEALED CLOSED	12-5-05	
AB-25	NGV-182	Pen 372 Drain & Test	CLOSED & CAPPED	11-29-5	CLOSED & CAPPED	11-29-5	SEALED CLOSED & CAPPED	12-5-05	
AB-25	NGV-82	N2 Iso to Press/RCDT	UNLOCKED & OPEN	11-30-5	CLOSED locked	11-30-5	LOCKED CLOSED	12-5-05	
	NGV-209	N2 Supply to RB Vent	OPEN & UNCAPPED	11-29-5	OPEN & UNCAPPED (118)	11-29-5	CLOSED CAPPED	12-5-05	
RB-4	NGV-78	NG-42-PI Iso	OPEN	11-16-5	~~OPEN~~ CLOSED	11-30-5	CLOSED	(8) 12-5	NA
RB-4	NG-42-PI	Pressure Gauge	**REMOVED	N/A	INSTALLED	11-30-5	INSTALLED	(8) 12-5	NA
RB-4	NGV-79	N2 Supply to RCSG-1B	OPEN	11-30-5	CLOSED SEALED	11-30-5	SEALED CLOSED	12-5-05	
AB-25	NGV-181	Pen 317 Drain & Test	CLOSED & CAPPED	(A-93)	CLOSED & CAPPED	(A-93)	SEALED CLOSED & CAPPED	12-5-05	
AB-25	NGV-81	N2 Supply to SG Iso	UNLOCKED & OPEN	11-29-5	CLOSED locked	11-30-5	LOCKED CLOSED	12-5-05	

(118) changed valve position to closed since gage not removed and valve's normal position closed and valve not being tested in ILRT. 11-30-05

ATTACHMENT 3C
SPECIAL ILRT VALVE LINEUPS

SYSTEM: NITROGEN

PEN. NO.: 317,355,372 **Dwg.: FD-302-011 Sht.s 2, 4; FD-302-673 Sht. 4**

	VALVE NO.	VALVE DESCRIPTION	VENT LINEUP	INITIAL/DATE	TEST LINEUP	INITIAL/DATE	RESTORED POSITION	TAG PULLED INITIAL/DATE	IND. VERF. INIT/DATE
RB-4	NGV-65	NG-38-PI ISO.	OPEN	11.16.5	~~***OPEN~~ CLOSED	11.30.5	CLOSED	12-5	NA
	NG-38-PI	Pressure Gauge	**REMOVED	N/A	INSTALLED	11.30.5	INSTALLED	12-5	
RB-4	NGV-284	N2 Primary Supply Drain	OPEN & UNCAPPED	11.16.5	CLOSED & CAPPED	11.30.5	CLOSED & CAPPED		
RB-4	NGV-268	NGV-265 Control Valve Iso	OPEN	11.30.5	OPEN	11.30.5	CLOSED	12-5-05	
RB-4	NGV-283	NGV-265 Control Valve Bypass	OPEN	11.30.5	OPEN	11.30.5	CLOSED	12-5-05	
RB-4	NGV-262	N2 Primary Supply Iso	OPEN	11.30.5	SEALED CLOSED	11.30.5	SEALED CLOSED	12-4-5	NA
	NGV-183	Pen 355 Drain & Test	CLOSED & CAPPED	11.29.5	CLOSED & CAPPED	11.29.5	SEALED CLOSED & CAPPED	12-5-05	
	NGV-62	N2 Supply to SG Iso	UNLOCKED & OPEN	11.29.5	CLOSED	12205	LOCKED CLOSED	12-5-05	

*Open if N2 required on OTSG, closed if N2 not required on OTSG.
**REMOVE gauge to vent line ONLY if indicated pressure on gauge exceeds 40 psig
***IF associated gauge was removed to vent header, CLOSE isolation valve for test.

ATTACHMENT 3C
SPECIAL ILRT VALVE LINEUPS

SYSTEM: CORE FLOOD
PEN. NO.: 123,124,350,351,352,373 **Dwg.: FD-302-702 Sheet 1**

	VALVE NO.	VALVE DESCRIPTION	VENT LINEUP	INITIAL/DATE	TEST LINEUP	INITIAL/DATE	RESTORED POSITION	TAG PULLED INITIAL/DATE	IND. VERF. INIT/DATE
	NGV-4	Alt N2 CF Tanks Iso	CLOSED	11-29-05	CLOSED	11-29-05	LOCKED CLOSED	12-5-05	
	NGV-9	N2 CF Tanks Iso	CLOSED	11-29-05	CLOSED	11-29-05	CLOSED	12-4-05	NA
	NGV-220	N2 Supply	CLOSED	11-29-05	CLOSED	11-29-05	CLOSED		
	NGV-1	CFT 1A N2 Supply	OPEN	11-17-05	OPEN	11-17-05	OPEN		
	NGV-2	CFT 1B N2 Supply	OPEN	11-29-05	OPEN	11-29-05	OPEN		
	NG-51-PI	Press Indicator	REMOVED	12/2/5	REMOVED	12/2/5	INSTALLED	12-5-05	
	NGV-13	NG-51-PI-Iso	OPEN	11-17-05	OPEN	11-17-05	OPEN	12-1-05	NA
AB-4	CFV-78	CFT 1B N2 Iso	OPEN	A-29	OPEN	A-29	OPEN		A-29
AB-5	CFV-76	CFT 1A N2 Iso	OPEN	11-16-05	OPEN	11-16-05	OPEN		
AB-5	CFV-75 •	CFT 1A N2 Supply Vent	OPEN & UNCAPPED	29B 12-2-05	CLOSED & CAPPED	A-29 12-2-05	CLOSED & CAPPED	A-29	A-29
AB-25	CFV-48 •	Pen 373 Drain & Test	OPEN & UNCAPPED	29B 12-2-05	CLOSED & CAPPED	A-29 12-2-05	SEALED CLOSED & CAPPED	A-29	A-29
MCB	CFV-25	CFT 1A Fill Iso	OPEN	29B 12-2-05	CLOSED	12/3/05	CLOSED	12-1-05	NA
	CFV-49 •	Pen 123 Drain & Test	OPEN & UNCAPPED	29B 12-2-05	CLOSED & CAPPED	A-29 12-2-05	SEALED CLOSED & CAPPED	A-29 12-1-05	A-29
MCB	CFV-28	CFT 1A N2 Supply	OPEN	29B 12-2-05	CLOSED	12/3/05	CLOSED	12-6-05	NA
AB-4	CFV-77 •	CFT 1B N2 Supply Vent	OPEN & UNCAPPED	29B 11-16-05	CLOSED & CAPPED	A-29 12-2-05	CLOSED & CAPPED	12-6-05 A-29	NA A-29
AB-25	CFV-47 •	Pen 350 Drain & Test	OPEN & UNCAPPED	29B 12-2-05	CLOSED & CAPPED	A-29 12-2-05	SEALED CLOSED & CAPPED	A-29 12-1-05	A-29
MCB	CFV-26	CFT 1B Fill Iso	OPEN	29B 12-2-05	CLOSED	12/3/05	CLOSED	12-4-05	NA
MCB	CFV-27	CFT 1B N2 Supply	OPEN	29B 12-2-05	CLOSED	12/3/05	CLOSED	12-4-05	NA
	CFV-46 •	Pen 124 Drain & Test	OPEN & UNCAPPED*	29B 12-2-05	CLOSED & CAPPED	A-29 12-2-05	SEALED CLOSED & CAPPED	A-29 12-2-05	A-29
MCB	CFV-15	CFT 1B WD Vent	OPEN	29B 12-2-05	CLOSED	12/3/05	CLOSED	12-4-05	NA
MCB	CFV-16	CFT 1A WD Vent	OPEN	29B 12-2-05	CLOSED	12/3/05	CLOSED		
MCB	CFV-29	CFT WD Iso	OPEN	29B 12-2-05	CLOSED	12/3/05	CLOSED		
AB-25	CFV-50 •	Pen 351 Drain & Test	OPEN & UNCAPPED	29B 12-2-05	CLOSED & CAPPED	A-29 12-2-05	SEALED CLOSED & CAPPED	A-29 12-1-05	A-29
AB-25	CFV-45 •	Pen 352 Drain &	SEALED	A-29 12-2-05	SEALED	A-29 12-2-05	SEALED CLOSED	A-29	A-29

A-29 Valve alignment completed in AI-61 enclosure 1 Valve Checklist 1. 12/28/05

29B CFT-1A/B verified to have <10 psig pressure. 12-2-05

ATTACHMENT 3C
SPECIAL ILRT VALVE LINEUPS

SYSTEM: CORE FLOOD

PEN. NO.: 123,124,350,351,352,373 **Dwg.: FD-302-702 Sheet 1**

	VALVE NO.	VALVE DESCRIPTION	VENT LINEUP	INITIAL/DATE	TEST LINEUP	INITIAL/DATE	RESTORED POSITION	TAG PULLED INITIAL/DATE	IND. VERF. INIT/DATE
		Test	CLOSED & CAPPED	A-29 12-2-05	CLOSED & CAPPED	A-29 12-3-05	& CAPPED	A-29 12-2-05	A-29
MCB	CFV-11	CFT 1A Sample	OPEN*	29B 12-2-05	CLOSED	12/3/05	CLOSED	8C 12-2-05	NA
MCB	CFV-12	CFT 1B Sample	OPEN*	29B 12-2-05	CLOSED	12/3/05	CLOSED	8C	
MCB	CFV-42	CFT Sample/WD	OPEN*	29B 12-2-05	CLOSED	12/3/05	CLOSED	8C	
	NGV-11	CFT Elec Heater N2 Iso	OPEN	12/2/5	OPEN	12/2/5	OPEN	8C	
	CFV-5	CF Tank 1A Outlet Iso	CLOSED	A-29 12-2-05	CLOSED	A-29 12-2-05	**CLOSED	A-29 12-2-05	A-29
	CFV-6	CF Tank 1B Outlet Iso	CLOSED	A-29 12-2-05	CLOSED	A-29 12-2-05	**CLOSED	A-29 12-2-05	A-29
RB-15	CFV-7	CF Tank 1B to RC Drain Tank	CLOSED	A-29 12-2-05	CLOSED	A-29 12-2-05	CLOSED	A-29	A-29
RB-5	CFV-10	CF Tank 1A to RC Drain Tank	CLOSED	11-16-05	CLOSED	11-16-05	CLOSED	8C	NA

*A nitrogen pressure of approximately 20 PSIG may be used to aid draining.

**Valves closed with breaker Red Tagged in Locked Off position when RCS < 650 psi
Valves open with breaker Red Tagged in Locked Off position when RCS > 700 psi

NOTE: Perform core flood lineup prior to performing gas waste disposal lineup Attachments 3A, 3B.

A-29 Valve alignment completed in Plant Enclosure 1 valve checklists. 11-28-05

ATTACHMENT 3C
SPECIAL ILRT VALVE LINEUPS

SYSTEM: CONTAINMENT MONITORING
PEN. NO.: 306,315,332,356,376 **Drawing: FD-302-693 Sheet 1**

VALVE NO.	VALVE DESCRIPTION	VENT LINEUP	INITIAL/DATE	TEST LINEUP	INITIAL/DATE	RESTORED POSITION	TAG PULLED INITIAL/DATE	IND. VERF. INIT/DATE
WSV-1	PA H2 Sample Iso	UNLOCKED & OPEN	122B	CLOSED	122B	LOCKED CLOSED	12-5-05	✓
WSV-2	PA H2 Sample Iso	UNLOCKED & OPEN		CLOSED		LOCKED CLOSED	12-5-05	✓
WSV-3	Cont Monitor Iso	OPEN		CLOSED		OPEN	12/1/5	12/5
WSV-4	Cont Monitor Iso	OPEN		CLOSED		OPEN	12/1/5	12/5
WSV-111	Alt. Sample Iso	OPEN		OPEN		OPEN	(8) 12-1-5	NA
WSV-5	Cont Monitor Iso	OPEN		CLOSED		OPEN	12/1/5	12/5
WSV-6	Cont Monitor Iso	OPEN		CLOSED		OPEN	12/1/5	12/5
WSV-9	Port H2 Anal Sample Bypass	CLOSED		CLOSED		OPEN	12-5-05	✓
WSV-26 #	PA H2 Sample Iso	OPEN		CLOSED		CLOSED PWR/OFF	12-5-05	✓
WSV-27 #	PA H2 Sample Iso	OPEN		CLOSED		CLOSED PWR/OFF	12-5-05	✓
WSV-28 #	PA H2 Sample Iso	OPEN		CLOSED		CLOSED PWR/OFF	12-5-05	✓
WSV-29 #	PA H2 Sample Iso	OPEN		CLOSED		CLOSED PWR/OFF	12-5-05	✓
WSV-30 #	PA H2 Sample Iso	OPEN		CLOSED		CLOSED PWR/OFF	12-5-05	✓
WSV-31 #	PA H2 Sample Iso	OPEN		CLOSED		CLOSED PWR/OFF	12-5-05	✓
WSV-123	RM-A6 Inlet	CLOSED		CLOSED		OPEN	12-5-5	12-5-5
WSV-122	RM-A6 Outlet	CLOSED		CLOSED		OPEN	12-5-5	12-5-5
WSV-32 #	PA H2 Sample Iso	OPEN		CLOSED		CLOSED PWR/OFF	12-5-05	✓
WSV-33 #	PA H2 Sample Iso	OPEN		CLOSED		CLOSED PWR/OFF	12-5-05	✓
WSV-34 #	PA H2 Sample Iso	OPEN		CLOSED		CLOSED PWR/OFF	12-5-05	✓
WSV-35 #	PA H2 Sample Iso	OPEN		CLOSED		CLOSED PWR/OFF	12-5-05	✓
WSV-36	PA H2 Sample Iso	OPEN		OPEN		CLOSED	12-5-05	✓
WSV-37	PA H2 Sample Iso	CLOSED		CLOSED		CLOSED	(8) 12-1-5	NA
WSV-38 #	PA H2 Sample Iso	OPEN		CLOSED		CLOSED PWR/OFF	12-5-05	✓
WSV-39 #	PA H2 Sample Iso	OPEN		CLOSED		CLOSED PWR/OFF	12-5-05	✓
WSV-40 #	PA H2 Sample Iso	OPEN		CLOSED		CLOSED PWR/OFF	12-5-05	✓
WSV-41 #	PA H2 Sample Iso	OPEN		CLOSED		CLOSED PWR/OFF	12-5-05	✓
WSV-42 #	PA H2 Sample Iso	OPEN		CLOSED		CLOSED PWR/OFF	12-5-05	✓
WSV-43 #	PA H2 Sample Iso	OPEN		CLOSED		CLOSED PWR/OFF	12-5-05	✓
WSV-663	H2 Analyzer B Iso	CLOSED		CLOSED		OPEN	12-5-05	✓
WSV-664	H2 Analyzer A Iso	CLOSED		CLOSED		OPEN	12-5-05	✓
WSV-109	Aim Detector Iso	CLOSED		CLOSED		OPEN	12-5-05	✓

122B Documented on SP-178, Rev 29, Pg. 122. R Zoty 12/22/05

ATTACHMENT 3C
SPECIAL ILRT VALVE LINEUPS

SYSTEM: CONTAINMENT MONITORING
PEN. NO.: 306,315,332,356,376 **Drawing: FD-302-693 Sheet 1**

	VALVE NO.	VALVE DESCRIPTION	VENT LINEUP	INITIAL/DATE	TEST LINEUP	INITIAL/DATE	RESTORED POSITION	TAG PULLED INITIAL/DATE	IND. VERF. INIT/DATE
AB-25	WSV-1	PA H2 Sample Iso	UNLOCKED & OPEN	11-30-05	CLOSED	11-30-05	LOCKED CLOSED	122	122
AB-25	WSV-2	PA H2 Sample Iso	UNLOCKED & OPEN	11-30-05	CLOSED	11-30-05	LOCKED CLOSED		
MCB	WSV-3	Cont Monitor Iso	OPEN	11-30-05	CLOSED	11-30-05	OPEN		
MCB	WSV-4	Cont Monitor Iso	OPEN	11-30-05	CLOSED	11-30-05	OPEN		
RB	WSV-111	Alt. Sample Iso	OPEN	11-30-05	OPEN	11-30-05	OPEN		
MCB	WSV-5	Cont Monitor Iso	OPEN	11-30-05	CLOSED	11-30-05	OPEN		
MCB	WSV-6	Cont Monitor Iso	OPEN	11-30-05	CLOSED	11-30-05	OPEN		
AB-25	WSV-9	Port H2 Anal Sample Bypass	CLOSED	11-30-05	CLOSED	11-30-05	OPEN		
EFFIC Room	WSV-26	PA H2 Sample Iso	OPEN	11-30-05	CLOSED	11-30-05	CLOSED PWR/OFF		
	WSV-27	PA H2 Sample Iso	OPEN	11-30-05	CLOSED	11-30-05	CLOSED PWR/OFF		
	WSV-28	PA H2 Sample Iso	OPEN	11-30-05	CLOSED	11-30-05	CLOSED PWR/OFF		
	WSV-29	PA H2 Sample Iso	OPEN	11-30-05	CLOSED	11-30-05	CLOSED PWR/OFF		
	WSV-30	PA H2 Sample Iso	OPEN	11-30-05	CLOSED	11-30-05	CLOSED PWR/OFF		
	WSV-31	PA H2 Sample Iso	OPEN	11-30-05	CLOSED	11-30-05	CLOSED PWR/OFF		
AB 25	WSV-123	RM-A6 Inlet	CLOSED	11-30-05	CLOSED	11-30-05	OPEN		
	WSV-122	RM-A6 Outlet	CLOSED	11-30-05	CLOSED	11-30-05	OPEN		
EFFIC Room	WSV-32	PA H2 Sample Iso	OPEN	11-30-05	CLOSED	11-30-05	CLOSED PWR/OFF		
	WSV-33	PA H2 Sample Iso	OPEN	11-30-05	CLOSED	11-30-05	CLOSED PWR/OFF		
	WSV-34	PA H2 Sample Iso	OPEN	11-30-05	CLOSED	11-30-05	CLOSED PWR/OFF		
	WSV-35	PA H2 Sample Iso	OPEN	11-30-05	CLOSED	11-30-05	CLOSED PWR/OFF		
CONT Room	WSV-36	PA H2 Sample Iso	OPEN	11-30-05	OPEN	11-30-05	CLOSED		
	WSV-37	PA H2 Sample Iso	CLOSED	11-30-05	CLOSED	11-30-05	CLOSED		
EFFIC Room	WSV-38	PA H2 Sample Iso	OPEN	11-30-05	CLOSED	11-30-05	CLOSED PWR/OFF		
	WSV-39	PA H2 Sample Iso	OPEN	11-30-05	CLOSED	11-30-05	CLOSED PWR/OFF		
	WSV-40	PA H2 Sample Iso	OPEN	11-30-05	CLOSED	11-30-05	CLOSED PWR/OFF		
	WSV-41	PA H2 Sample Iso	OPEN	11-30-05	CLOSED	11-30-05	CLOSED PWR/OFF		
	WSV-42	PA H2 Sample Iso	OPEN	11-30-05	CLOSED	11-30-05	CLOSED PWR/OFF		
	WSV-43	PA H2 Sample Iso	OPEN	11-30-05	CLOSED	11-30-05	CLOSED PWR/OFF		
AB-38	WSV-663	H2 Analyzer B Iso	CLOSED	11-30-05	CLOSED	11-30-05	OPEN		
AB-38	WSV-664	H2 Analyzer A Iso	CLOSED	11-30-05	CLOSED	11-30-05	OPEN		
AB-37	WSV-109	Aim Detector Iso	CLOSED	11-30-05	CLOSED	11-30-05	OPEN		

(122) Documented on SP-178, Rev 29B, Pg. 122 [illegible] 12/02/05

ATTACHMENT 3C
SPECIAL ILRT VALVE LINEUPS

SYSTEM: CONTAINMENT MONITORING
PEN. NO.: 306,315,332,356,376 **Drawing: FD-302-693 Sheet 1**

VALVE NO.	VALVE DESCRIPTION	VENT LINEUP	INITIAL/DATE	TEST LINEUP	INITIAL/DATE	RESTORED POSITION	TAG PULLED INITIAL/DATE	IND. VERF. INIT/DATE
	H2 Analyzer Cal Gas Bottles (4)	DISCONNECTED	123B	DISCONNECTED	123B	RECONNECT	12-5-05	α
WSV-7	Port H2 Anal Sample Iso	OPEN & UNCAPPED*		OPEN & UNCAPPED*		CLOSED & CAPPED ~~(RECONNECT WS-1-CE AT WSV-7)~~	12-5-05	α
WSV-21	Pen 332 Drain & Test	OPEN & UNCAPPED		OPEN & UNCAPPED		CLOSED & CAPPED	12-5-05	α
WSV-44	Test Conn	OPEN & UNCAPPED		OPEN & UNCAPPED		CLOSED & CAPPED	12-5-05	α
WSV-45	Test Conn	OPEN & UNCAPPED		OPEN & UNCAPPED		CLOSED & CAPPED	12-5-05	α
WSV-46	Test Conn	OPEN & UNCAPPED		OPEN & UNCAPPED		CLOSED & CAPPED	12-5-05	α
WSV-47	Test Conn	OPEN & UNCAPPED		OPEN & UNCAPPED		CLOSED & CAPPED	12-5-05	α
WSV-48	Test Conn	OPEN & UNCAPPED		OPEN & UNCAPPED		CLOSED & CAPPED	12-5-05	α
WSV-47	Test Conn FLEX HOSE#	DISCONNECTED		DISCONNECTED		DISCONNECTED ~~INSTALLED~~	81 12-4-5	NA
WSV-48	Test Conn FLEX HOSE#	DISCONNECTED	123B	DISCONNECTED	123B	DISCONNECTED ~~INSTALLED~~	82 12-4-5	NA

~~*Disconnect WS-1-CE at WSV-7~~

Cycle the following breakers for valve position verification. Restore per OP-700E.
- DPDP-5A BKR 2 for WSV-29, 31, 35, 43
- DPDP-8A BKR 14 for WSV-28, 30, 34, 42
- DPDP-5B BKR 27 for WSV-27, 33, 39, 40
- DPDP-8B BKR 21 for WSV-26, 32, 38, 41

123B Documented on SP-178, Rev 29, Pg. 123. 12/22/05

ATTACHMENT 3C
SPECIAL ILRT VALVE LINEUPS

SYSTEM: CONTAINMENT MONITORING

PEN. NO.: 306,315,332,356,376 **Drawing: FD-302-693 Sheet 1**

	VALVE NO.	VALVE DESCRIPTION	VENT LINEUP	INITIAL/DATE	TEST LINEUP	INITIAL/DATE	RESTORED POSITION	TAG PULLED INITIAL/DATE	IND. VERF. INIT/DATE
143'	DISCONNECT BOTTLE	H2 Analyzer Cal Gas Bottles (4)	DISCONNECTED	JR 11-30-05	DISCONNECTED	JR 11-30-05	RECONNECT	123	123
AB-25	WSV-7	Port H2 Anal Sample Iso	OPEN* UNCAPPED	JR 11-30-05	OPEN* UNCAPPED	JR 11-30-05	CLOSED / CAPPED ~~(RECONNECT WS-1-CE AT WSV-7)~~		
AB-25	WSV-21	Pen 332 Drain & Test	OPEN & UNCAPPED	JR 11-30-05	OPEN & UNCAPPED	JR 11-30-05	CLOSED & CAPPED		
AB-32	WSV-44	Test Conn	OPEN & UNCAPPED	JR 11-30-05	OPEN & UNCAPPED	JR 11-30-05	CLOSED & CAPPED		
AB-32	WSV-45	Test Conn	OPEN & UNCAPPED	JR 11-30-05	OPEN & UNCAPPED	JR 11-30-05	CLOSED & CAPPED		
AB-25	WSV-46	Test Conn	OPEN & UNCAPPED	JR 11-30-05	OPEN & UNCAPPED	JR 11-30-05	CLOSED & CAPPED		
AB-25	WSV-47	Test Conn	OPEN & UNCAPPED	JR 11-30-05	OPEN & UNCAPPED	JR 11-30-05	CLOSED & CAPPED		
AB-25	WSV-48	Test Conn	OPEN & UNCAPPED	JR 11-30-05	OPEN & UNCAPPED	JR 11-30-05	CLOSED & CAPPED		
	WSV-47	Test Conn FLEX HOSE?	DISCONNECTED	JR 11-30-05	DISCONNECTED	JR 11-30-05	~~INSTALLED~~		
	WSV-48	Test Conn FLEX HOSE?	DISCONNECTED	JR 11-30-05	DISCONNECTED	JR 11-30-05	~~INSTALLED~~	123	123

*Disconnect WS-1-CE at WSV-7

(123) Documented on SP-178, Rev 29B, Pg. 123. [illegible] 12/02/05

ATTACHMENT 3C
SPECIAL ILRT VALVE LINEUPS

SYSTEM: FIRE SERVICE
PEN. NO.: 430

Drawing: FD-302-231 Sheet 5 of 7

	VALVE NO.	VALVE DESCRIPTION	VENT LINEUP	INITIAL/DATE	TEST LINEUP	INITIAL/DATE	RESTORED POSITION	TAG PULLED INITIAL/DATE	IND. VERF. INIT/DATE
	FSV-263	RB Iso	CLOSED	(124) AB 12-3-05	CLOSED	12-3-05	SEALED OPEN	12-5-05	✓
	FSV-261	RB Iso	UNLOCKED & OPEN	11-17-05	CLOSED (124)	12-3-05	*OPEN/LOCKED CLOSED	12-5-05	✓
	FSV-274	Vent	OPEN	(124) AB 12-3	~~OPEN~~ CLOSED	12-3-05	CLOSED	(81) AB 12-4-5	NA
	FSV-275	Drain & Test	OPEN	(124) AB 12-3	CLOSED	12-3-05	CLOSED	(81) AB 12-4-5	NA
RB-1	FSV-278	Drain & Test	OPEN & UNCAPPED	(124) AB 12-3-05	CLOSED & CAPPED	12-3-05	SEALED CLOSED CAPPED	12-5-05	✓
RB-1	FSV-264	Branch Iso	OPEN	(124) AB 12-3-05	~~CLOSED~~ (124) OPEN	12-3-05	OPEN	(81) AB 12-4-5	NA
RB-1	FSV-277	Drain & Test	OPEN UNCAPPED	(124) AB 12-3-05	~~OPEN~~ CLOSED & ~~UNCAPPED~~ CAPPED	12-3-05	CLOSED CAPPED	(81) AB 12-4-5	NA
RB-1	FSV-265	Branch Iso	CLOSED	(124) AB 12-3-05	~~CLOSED~~ OPEN	12-3-05	OPEN	(81) AB 12-4-5	NA
				(124)					

*FSV-261 will be open to charge the fire service standpipe only when work which introduces ignition sources or transient fire loads is being performed within the Reactor Building during Mode 5 or Mode 6. FSV-261 will be closed at all other times to maintain containment integrity.

(124) Liquid system isolated, no venting and draining required. Decision to take penalty for penetration 430. AB 12-2-05

ATTACHMENT 3D
SUPPLEMENTARY ILRT VALVE LINEUPS
(Page 1 of 1)

SYSTEM:

VALVE	DESCRIPTION	LOCATION	AS FOUND	TEST L/U	INIT	AS LEFT	INIT	V
SAV-72	EQ HATCH RAX-2 SEAL ISO	EQ HATCH	SEALED CLOSED	OPEN	AB	SEALED CLOSED	✓	TR 12-5-05
SAV-74	PERS HATCH RAX-1 SEAL ISO	PERS HATCH	SEAL CLOSED	OPEN	AB	SEALED CLOSED	✓	TR 12-5-05
SAV-75	RX ISO RAX-1	PERS HATCH	SEAL CLOSED + CAPPED	OPEN	AB	SEALED CLOSED	✓	TR 12-5-05
SAV-76	RX ISO RAX-2	EQ HATCH	SEAL CLOSED + CAPPED	OPEN	AB	SEALED CLOSED CAPPED	✓	TR 12-5-05
CAV-620	CAV-2 UPSTREAM ISO	CAV-2 V.A.	OPEN	CLOSED	AB	OPEN	✓	TR 12-5-05

Use this form to document additional lineups. Make additional copies as needed.

ATTACHMENT 3E
BREAKER LIST

		Action Completed Initial/Date		Returned to Normal Initial/Date	Returned to Normal Independent Verification Initial/Date
1.	Ensure following breakers are racked out IAW OP-209, OP-209A or OP-405:				
	4160V ES Bus 3A, Unit 3A8 (BSP-1A)	AS	11-30-5	C/O 188581	NA/
	4160V ES Bus 3B, Unit 3B7 (BSP-1B)	AS	11-30-5	C/O 188581	NA/
2.	Install a jumper at the following locations:		Conc. Verif.		
	ES Press. SW Cab 3A1 TB2-11, TB2-12 (RPS Ch. "A" Dwg 210-602)	/	/	/	
	ES Press. SW Cab 3A1 TB1-1, TB1-2 (ES-A Ch 1 Dwg 210-602, 208-028 ES-A44)	/	/	/	/
	ES Press. SW Cab 3A2 TB2-11, TB2-12 (RPS Ch. "B" Dwg 210-603)	/		/	/
	ES Press. SW Cab 3A2 TB1-1, TB1-2 (ES-A Ch 2 Dwg 210-603, 208-028 ES-A45)			/	/
	ES Press. SW Cab 3A3 TB2-1, TB2-2 (RPS Ch. "C" Dwg 210-604)	/	/	/	/
	ES Press. SW Cab 3A3 TB1-1, TB1-2 (ES-A Ch 3 Dwg 210-604, 208-028 ES-A46)	/	/	/	/
	ES Press. SW Cab 3A4 TB2-1, TB2-2 (RPS Ch. "D" Dwg 210-605)	/	/	/	/
	ES Press. SW Cab 3B1 TB2-1, TB2-2 (ES-B Ch. 1 Dwg 210-606, 208-028 ES-B44)	/	/	/	/
	ES Press. SW Cab 3B2 TB2-1, TB2-2 (ES-B Ch 2 Dwg 210-607, 208-028 ES-B45)	/	/	/	/
	ES Press. SW Cab 3B3 TB2-1, TB2-2 (ES-B Ch 3 Dwg 210-608, 208-028 ES-B46)	/	/	/	/

See Attached Page
Rev 70 12/01/05

ATTACHMENT 3E
BREAKER LIST

		Action Completed Initial/Date		Returned to Normal Initial/Date	Returned to Normal Independent Verification Initial/Date
1.	Ensure following breakers are racked out IAW OP-209, OP-209A or OP-405:	see attached page			12/01/05
	4160V ES Bus 3A, Unit 3A8 (BSP-1A)	/		/	/
	4160V ES Bus 3B, Unit 3B7 (BSP-1B)	/		/	/
2.	Install a jumper at the following locations:		Conc. Verif.		
	ES Press. SW Cab 3A1 TB2-11, TB2-12 (RPS Ch. "A" Dwg 210-602)	11/29/5	11-29-5	12-5-5	12-5-05
	ES Press. SW Cab 3A1 TB1-1, TB1-2 (ES-A Ch 1 Dwg 210-602, 208-028 ES-A44)	11/29/5	11-29-5	12-5-5	12-5-05
	ES Press. SW Cab 3A2 TB2-11, TB2-12 (RPS Ch. "B" Dwg 210-603)	11/30/5	11-30-5	12-5-5	12-5-05
	ES Press. SW Cab 3A2 TB1-1, TB1-2 (ES-A Ch 2 Dwg 210-603, 208-028 ES-A45)	11/30/5	11-30-5	12-5-5	12-5-05
	ES Press. SW Cab 3A3 TB2-1, TB2-2 (RPS Ch. "C" Dwg 210-604)	11/30/5	11-30-5	12-5-5	12-5-05
	ES Press. SW Cab 3A3 TB1-1, TB1-2 (ES-A Ch 3 Dwg 210-604, 208-028 ES-A46)	11/30/5	11-30-5	12-5-5	12-5-05
	ES Press. SW Cab 3A4 TB2-1, TB2-2 (RPS Ch. "D" Dwg 210-605)	11/30/5	11-30-5	12-5-5	12-5-05
	ES Press. SW Cab 3B1 TB2-1, TB2-2 (ES-B Ch. 1 Dwg 210-606, 208-028 ES-B44)	11/30/5	11-30-5	12-5-5	12-5-05
	ES Press. SW Cab 3B2 TB2-1, TB2-2 (ES-B Ch 2 Dwg 210-607, 208-028 ES-B45)	11/30/5	11-30-5	12-5-5	12-5-05
	ES Press. SW Cab 3B3 TB2-1, TB2-2 (ES-B Ch 3 Dwg 210-608, 208-028 ES-B46)	11/30/5	11-30-5	12-5-5	12-5-05

ATTACHMENT 3E
BREAKER LIST

		Action Completed Initial/Date		Returned to Normal Initial/Date		Returned to Normal Independent Verification Initial/Date
3.	Open the following sliding links:		Conc. Verif.			
	ES Press. SW Cab 3A1 TB1-3 (ES-A Ch 1 Dwg 210-602, 208-028 ES-A44)	not / 11/29/5	/ 11-29-5	/ 12-5-5		/ 12-5-05
	ES Press. SW Cab 3A2 TB1-3 (ES-A Ch 2 Dwg 210-603, 208-028 ES-A45)	/ 11-30-05	/ 11-30-05	/ 12-5-5		/ 12-5-05
	ES Press. SW Cab 3A3 TB1-3 (ES-A Ch 3 Dwg 210-604, 208-028 ES-A46)	/ 11-30-05	/ 11-30-05	/ 12-5-5		/ 12-5-05
	ES Press. SW Cab 3B1 TB2-3 (ES-B Ch. 1 Dwg 210-606, 208-028 ES-B44)	/ 11-30-05	/ 11-30-05	/ 12-5-5		/ 12-5-05
	ES Press. SW Cab 3B2 TB2-3 (ES-B Ch 2 Dwg 210-607, 208-028 ES-B45)	/ 11/30/05	/ 11-30-05	/ 12-5-5		/ 12-5-05
	ES Press. SW Cab 3B3 TB2-3 (ES-B Ch 3 Dwg 210-608, 208-028 ES-B46)	/ 11-30-05	/ 11-30-05	/ 12-5-5		/ 12-5-05

4.	De-energize the following components, place the listed breakers in the lock reset position:				
	a. ENSURE "HPI Valve Emerg Power Sel" switches are SELECT to "OFF" position IAW OP-209 or OP-209A				
	MUV-23 and MUV-24 selected to "OFF", on ES-A panel	/ 12/3 /		c/o 88578	N/A /
	MUV-25 and MUV-26 selected to "OFF", on ES-A panel	/ 12/3 /		c/o 88578	/
	MUV-23 and MUV-24 selected to "OFF", on ES-B panel	/ 12/3 /		c/o 88578	/
	MUV-25 and MUV-26 selected to "OFF", on ES-B panel	/ 12/3 /		c/o 88578	/

ATTACHMENT 3E
BREAKER LIST

		Action Completed Initial/Date	Returned to Normal Initial/Date	Returned to Normal Independent Verification Initial/Date
	b. ES-MCC-3A1			
	Breaker 4A (BSV-3)	JH 12/3/05	C/O 188581	NA /
	Breaker ~~1C~~ 1D (CFV-11)	/ 12/3/05	1205245	12.5.5
	Breaker ~~2B~~ 2C (CFV-12)	/ 12/3/05	1205245	12.5.5
	Breaker ~~2C~~ 2D (CFV-15)	/ 12/3/05	1205245	12.5.5
	Breaker 3B (CFV-16)	JH 12/3/05	1205245	12.5.5
	Breaker 6A (AHV-1B)	JH 12/3/05	1205245	12.5.5
	Breaker 8A (AHV-1C)	JH 12/3/05	1205245	12.5.5
	c. ES-MCC-3A2			
	Breaker 5D (CAV-1)	JH 12/3/05	1205245	12.5.5
	Breaker 6C (CAV-3)	JH 12/3/05	1205245	12.5.5
	Breaker 9A (CAV-126)	JH 12/3/05	1205245	12.5.5
	Breaker 8C (MUV-260)	JH 12/3/05	C/O 103745	NA /
	Breaker 10B (MUV-261)	JH 12/3/05	C/O 103745	NA /
	Breaker 8A (MUV-258)	JH 12/3/05	C/O 103745	NA /
	Breaker 8B (MUV-259)	JH 12/3/05	C/O 103745	NA /
	Breaker 9B (WDV-3)	EC 13 Dec 05	1205245	12.5.5
	Breaker 9C (WDV-60)	JH 12/3/05	1205245	12.5.5
	Breaker 10C (WDV-94)	JH 12/3/05	1205245	12.5.5
	Breaker 10A (WDV-406)	JH 12/3/05	1205245	12.5.5
	Breaker 6D (CAV-4)	JH 12/3/05	1205245	12.5.5
	Breaker 5C (CAV-5)	JH 12/3/05	1205245	12.5.5
	d. ES-MCC-3A3			
	Unit 2 EG (MUV-567)	JH 12/3/05	1205245	12.5.5
	e. ES-MCC-3B2			
	Breaker 2C (BSV-4)	JH 12/3/05	C/O 88581	NA /

ATTACHMENT 3E
BREAKER LIST

		Action Completed Initial/Date	Returned to Normal Initial/Date	Returned to Normal Independent Verification Initial/Date
	Breaker 5C (WDV-405)	12/3/05	12/05	12.5.5
	f. ~~ES-MCC-3AB~~			
ES MCC 3B3	Breaker ~~2D~~ 3E6 (MUV-18)	12/3/05	12/05	12.5.5
ES MCC 3B2	Breaker ~~3G~~ 2A (MUV-27)	12/3/05	12/05	12.5.5
	Breaker 5C (DHV-91)	12/3/05	12/05	12.5.5
	Breaker 7D (DWV-160)	12/3/05	12/05	12.5.5

5. The following components are aligned to support the ILRT. Contact the ILRT Test Supervisor prior to manipulating these components. If Tags are required to identify components perform this step.

Valve	Location			
AHV-1A	CB-ESFB	12/3/05	12/5/5	NA
AHV-1D	CB-ESFB	12/3		
CAV-2	CB-ESFB	12/3		
CFV-29	CB-ESFAB	12/3		
CFV-42	CB-ESFAB	12/3		
CFV-42	CB-ESFAB	NA		
CIV-34	CB-ESFAB	12/3		
CIV-35	CB-ESFAB	12/3		
CIV-40	CB-ESFAB	12/3		
CIV-41	CB-ESFAB	12/3		
MUV-49	CB-ESFAB	12/3		
MUV-543	CB-ESFA	12/3		
MUV-545	CB-ESFB	12/3		
MUV-253	CB-ESFB	12/3		

ATTACHMENT 3E
BREAKER LIST

	Valve	Location	Action Completed Initial/Date		Returned to Normal Initial/Date		Returned to Normal Independent Verification Initial/Date
	SWV-47	CB-ESFAB	M 1/12/3		M 1/12/5/5		N/A /
	SWV-48	CB-ESFAB	M 1/12/3		M /		/
	SWV-49	CB-ESFAB	M 1/12/3		M /		/
	SWV-50	CB-ESFAB	M 1/12/3		M /		/
	SWV-79	CB-ESFAB	M 1/12/3		M /		/
	SWV-80	CB-ESFAB	M 1/12/3		M /		/
	SWV-81	CB-ESFAB	M 1/12/3		M /		/
	SWV-82	CB-ESFAB	M 1/12/3		M /		/
	SWV-83	CB-ESFAB	M 1/12/3		M /		/
	SWV-84	CB-ESFAB	M 1/12/3		M /		/
	SWV-85	CB-ESFAB	M 1/12/3		M /		/
	SWV-86	CB-ESFAB	M 1/12/3		M /		/
	SWV-109	CB-ESFAB	M 1/12/3		M /		/
	SWV-110	CB-ESFAB	M 1/12/3		M /		/
	WDV-4	CB-ESFB	AB 1/12/4		M /		/
	WDV-61	CB-ESFB	M 1/12/3		M /		/
	WDV-62	CB-ESFB	M 1/12/3		M /		/
	WSV-3	CB-ESFA	M 1/12/3		M /		/
	WSV-4	CB-ESFB	M 1/12/3		M /		/
	WSV-5	CB-ESFA	M 1/12/3		M /		/
	WSV-6	CB-ESFB	M 1/12/3		M /		/
	WDP-2A	MCB PTL	AB 1/12/4		M /		/
	WDP-2B	MCB PTL	AB 1/12/4		M /		/
	CIP-3A	MCB VENT PAN.	M 1/12/3		M /		/
	CIP-3B	MCB VENT PAN.	M 1/12/3		M /		/

ATTACHMENT 3E
BREAKER LIST

	Valve	Location	Action Completed Initial/Date		Returned to Normal Initial/Date		Returned to Normal Independent Verification Initial/Date
	WDP-3A	RAD WAS. PAN. PTL	12/3/05		12/05/2005		12.5.5
	WDP-3B	RAD WAS. PAN. PTL	12/3/05		12/05/2005		12.5.5
	WDP-4A	RAD WAS. PAN. PTL	12/3/05		12/05/2005		12.5.5
	WDP-4B	RAD WAS. PAN. PTL	12/3/05		12/05/2005		12.5.5
	CGP-2	LOCAL CONTROL STATION 119' ELEV IB	12/3/05		12/05/2005		12.5.5

COMMENTS: _____

ATTACHMENT 3F
LEAK DETECTION DEVICE TRACKING SHEET
(Page 1 of 1)

SYSTEM:

AREA	DESCRIPTION	LOCATION	AS FOUND	TEST L/U	INIT	AS LEFT	INIT	V

Use this form to document additional lineups for gauge placements or to troubleshooting efforts. Make additional copies as needed.

ATTACHMENT 4
CONTAINMENT BUILDING PRESSURIZATION/DEPRESSURIZATION SYSTEM INSTALLATION AND CHECKOUT

1.0 EQUIPMENT RECORD

Much of the pressurization system equipment will be rented for the ILRT. The contract with the vendor provides for supplying 30,000 cfm capacity, and the necessary equipment to dry and cool the air. The exact number and types of components supplied by the vendor to meet these requirements may vary. The major components of the pressurization system are described below. Record actual equipment used:

No. Planned	No. Used	Description
20	20	Air Compressor - Portable Engine(Diesel) Driven Screw Type, Capacity of 1500 scfm, 100% oil free, 100 psi. Total capacity: 30,000 cfm.
4	2	3000 cfm Dryer LowPres Desciccant
2	3	5400 cfm Dryer LowPres Desciccant
7	7	Heat Exchangers (Aftercoolers)
1	1	10,000 cfm Dryer LowPres Refrigerate
2	2	Air Manifold
2	1	60 ton Chiller LowTemp Air-Cool
2	0	750 gpm Pump End Suction
1	1	Surge Tank for Chillers
14	0	2 IN Quick-Connect Hose 25 FT
10	14	48 ft Fifth Wheel Dropdeck Trailer 2Ax
700'	700	Hard piping; lengths of 8" diameter hard piping (8" 150# bolt pattern) as needed to reach from designated Laydown area to Penetration 216/217 area. A portion of piping/hose is being borrowed from Plant Vogtle for 2005 ILRT.
30	30	3" bull hoses – 50' long - to inter-connect the compressors, after coolers, air dryers and supply manifolds
40	40	3" bull hoses – 25' long - to inter-connect the compressors, after coolers, air dryers and supply manifolds
		Miscellaneous: 2 300 GPM Pumps

* Actual Number required will depend on final choice of set-up area.

2.0 POWER REQUIREMENTS

Temporary electrical power must be supplied to the pressurization system components. The types, quantities and ultimate load will vary based on the weather conditions expected during the test and test preparation periods and the actual equipment supplied by the vendor. The table below lists typical requirements. Mark the table up to reflect actual requirements as needed.

No. Planned	No. Used	Description
1	1	300x2 kW Generator Twinpack
1	0	200 amp Window Panel
1	1	800 amp Distribution Panel
8	8	Quad Box String 20 FT
8	8	4/0 Cam-Lok - 50 FT
1	1	75 kVA Transformer LowVolt Fram

ATTACHMENT 4
CONTAINMENT BUILDING PRESSURIZATION/DEPRESSURIZATION SYSTEM INSTALLATION AND CHECKOUT

3.0 PRESSURIZATION SYSTEM INSTALLATION

3.1 TIMELINE:

- Delivery, security inspection, transport into Owner-Controlled area, 1 day (Start of pressurization -4 days)
- Set-up and check out pressurization system, connect to plant piping, 1-2 days (Start of pressurization -3 days)
- Resolve any compressor or component performance issues, perform flush/checkout if NOT previously completed (Start of pressurization -1 days)
- Compressor vendor Operator/mechanic support of pressurization (Start of pressurization -2 hrs + pressurization cycle, 8-12 hrs)
- Refuel Compressors (Start of pressurization + 6hrs). Refueling can be performed while operating. Top off at end of pressurization.
- Vent manifold line and/or compressor bull hoses, release Vendor operator (End of Pressurization, beginning of Stabilization Phase)
- Plant personnel monitor pressurization line for leaks. (through Stabilization Phase)
- Breakdown pressurization equipment – air dryers, compressors, chiller (if used), hose bibs to manifold (end of Verification Test). Schedule vendor pickup.
- Disconnect rented manifold from plant piping (end of Depressurization)
- Remove equipment from site, stage to parking lot, load onto vendor's flatbeds, ship (end of Depressurization + 1 day)

4.0 PRESSURIZATION SYSTEM CHECKOUT/LINE FLUSH

4.1 TEST EQUIPMENT

4.1.1 Fine mesh cloth for cleanliness check may be used during flushing.

4.2 PROCEDURE

		Initials
4.2.1	**Pressurization System Setup**	
4.2.1.1	Rented portions of Pressurization System are connected to each other per ILRT Test Supervisor's directions to the manifolds.	DW
4.2.1.2	Have Maintenance Department remove blind flanges outside Reactor Containment at penetrations 216 and 217.	DW
4.2.1.3	Have Maintenance Department install 12" to 8" reducing elbow and penetration isolation valve (PEN216-TV1 and PEN217-TV5) on both penetrations 216 and 217. Ensure penetration isolation valves PEN216-TV1 and PEN217-TV5 are closed.	DW
4.2.1.4	Have Maintenance Department install test flanges on the containment side of Penetrations 216 and 217.	N/A
4.2.1.5	Perform (information only) LLRT of PEN216-TV1 and PEN217-TV5. Perform LLRT of PEN216-TV2 and PEN217-TV6, if directed by ILRT Test Supervisor.	DW
4.2.1.6	Have Maintenance Department remove test flanges on the containment side of Penetrations 216 and 217.	N/A

CAUTION
Prior to pressurizing supply lines, remove all personnel from area with signs posted and area roped off.

4.2.2	Perform the following steps to verify pressurization line integrity.	
4.2.2.1	Install loop back hose inside the Turbine building between Penetration 216 8" supply line and Penetration 217 8" supply line.	DW
4.2.2.2	Align pressurization system, per Table 1 Step 4.2.2.2, for test of Penetration 216 air supply line.	DW
4.2.2.3	Start one diesel air compressor connected to penetration 216 and slowly increase pressure in test line via valve manifold to 100 psig.	DW
4.2.2.4	Hold pressure for ten (10) minutes (or as required to complete walkdown/leak checks). Inspect each connection for gross leakage. Repair any gross leakage. Small leakage is acceptable.	DW
4.2.2.5	Ensure personnel are clear of exhaust muffler and slowly open PEN217-TV8.	DW

4.2.2.6	Start remaining air compressors on Penetration 216 header one at a time until all compressors are running. Monitor exhaust muffler and piping continuously for vibration or excessive movement.	DW
4.2.2.7	Open air sampling valve on Penetration 216 piping and notify Chemistry to perform an air sample. Also notify HP to perform a noise evaluation of the area. After Air sample is complete, close air sample valve.	DW
4.2.2.8	Secure all compressors for Penetration 216 after flush is complete.	DW
4.2.2.9	Align pressurization system, per Table 1 Step 4.2.2.9, for test of Penetration 217 air supply line.	DW
4.2.3	Start one diesel air compressor connected to penetration 217 and slowly increase pressure in test line via valve manifold to 100 psig.	DW
4.2.3.1	Hold pressure for ten (10) minutes (or as required to complete walkdown/leak checks). Inspect each connection for gross leakage. Repair any gross leakage. Small leakage is acceptable.	DW
4.2.3.2	Ensure personnel are clear of exhaust muffler and slowly open PEN216-TV4.	DW
4.2.3.3	Start remaining air compressors on Penetration 217 header one at a time until all compressors are running. Monitor exhaust muffler and piping continuously for vibration or excessive movement.	DW
4.2.3.4	Open air sampling valve on Penetration 217 piping and notify Chemistry to perform an air sample. Also notify HP to perform a noise evaluation of the area. After air sample is complete, close air sample valve.	DW
4.2.3.5	Secure all compressors for Penetration 217.	DW
4.2.4	Remove loop back hose installed in Step 4.2.2.1	DW
4.2.5	Install remaining piping/hose for both Penetrations 216 and 217.	DW
4.2.6	Place pressurization system in Pressurization System Standby lineup described in Table 1 of this attachment.	DW
4.2.7	Top off compressors with fuel as necessary to be prepared for the ILRT.	DW
5.0	**PRESSURIZATION SYSTEM OPERATION**	
5.1	During ILRT rented portions of pressurization system will be operated by vendor-supplied personnel. These personnel will take direction from the ILRT Test Supervisor or his designee.	DW
5.2	Permanent plant valves and components will be manipulated by plant operating or test unit personnel as directed by the ILRT Test Supervisor.	[illegible]

5.3 WHEN directed by ILRT Test Supervisor, THEN lineup pressurization system to pressurize containment per "Pressurize Containment" line of Table 1. _____

5.4 During Pressurization, SECURE compressors/pressurization system as directed by the ILRT Test Supervisor. _____

5.5 Top off air compressors fuel tanks before return to vendor, if directed by ILRT Test Supervisor-(compressors are to be returned with the same fuel level as received or there will be an additional refueling charge). _____

5.6 When Pressurization is complete, the pressurization header will be isolated at the 8" isolation valves, PEN216-TV1, PEN216-TV2 (if directed by ILRT Test Supervisor), PEN217-TV5, and PEN217-TV6 (if directed by ILRT Test Supervisor). Once isolated, vent the pressurization headers through spare bib connections on the Pressurization System manifolds. _____

5.7 When directed by the ILRT Test Supervisor, disconnect the temporary piping from the "compressor-side" of the compressor 8" isolation valves (PEN216-TV3 and PEN217-TV7). _____

6.0 PRESSURIZATION SYSTEM RESTORATION

6.1 WHEN directed by ILRT Test Supervisor, THEN various components of pressurization system may be disconnected from each other, and from pressurization system manifold (e.g., dryers, compressors, aftercoolers, chiller, etc,. as applicable). _____

6.2 Pressurization system manifold may NOT be removed until directed by ILRT Test Supervisor. _____

6.3 Rented portions of pressurization system will be disconnected, prepared for shipment and moved to a staging area outside Protected Area for pickup by vendor's freight carrier. _____

6.4 Temporary piping from Penetrations 216 and 217 to valves PEN216-TV1, PEN216-TV2, PEN217-TV5, PEN217-TV6 may be disassembled when the containment has been completely depressurized. _____

ATTACHMENT 4
CONTAINMENT BUILDING PRESSURIZATION/DEPRESSURIZATION SYSTEM INSTALLATION AND CHECKOUT

TABLE 1

PRESSURIZATION SYSTEM ALIGNMENT	Pressurization System Components - Compressors	Air Supply to Manifold Bull Hoses	Pressurization System Supply Manifold Hose Bib-Isolation Valves	Desiccant Dryers	Compressor Outlet Valves	8" Temporary Valve from Pen. 216, PEN216-TV1	8" Temporary Valve from Pen. 216, PEN216-TV2	8" Temporary Valve from Pen. 216, PEN216-TV3	8" Temporary Valve from Pen. 216, PEN216-TV4	8" Temporary Valve from Pen. 217, PEN217-TV5	8" Temporary Valve from Pen. 217, PEN217-TV6	8" Temporary Valve from Pen. 216, PEN217-TV7	8" Temporary Valve from Pen. 216, PEN217-TV8
Attach. 4, Step 4.2.2.2 Pressurization System Flush 216	OFF**	Instl'd	O	ON	O*	C	-	O	C	C	-	C	C*
Attach. 4, Step 4.2.2.9 Pressurization System Flush 217	OFF**	Instl'd	O	ON	O*	C	-	C	C*	C	-	O	C
Attach. 4, Step 4.2.6 Press. System Standby	OFF	Instl'd	C	OFF	C	C	C	C	C	C	C	C	C
Procedure Step 5.3 Pressurize Containment	ON**	Instl'd	O	ON	O*	O*	O*	O*	C	O*	O*	O*	C
Containment at Pressure	OFF	Instl'd	C	OFF	C	C	C	C	C	C	C	C	C
During ILRT	OFF	Instl'd	C	OFF	C	C	C	C	C	C	C	C	C
During Verification Test	OFF	Instl'd	C	OFF	C	C	C	C	C	C	C	C	C
During Depressurization	Rmv'd	Rmv'd	C	OFF	C	Open	Thrtl Open	C	O	Open	Thrtl Open	C	O

*Opened and closed as directed by the ILRT Test Supervisor
**Started and Stopped as directed by the ILRT Test Supervisor

ATTACHMENT 5
ILRT MEASUREMENT SYSTEM INSTALLATION AND CHECKOUT

1.0 SPECIAL EQUIPMENT AND/OR INSTRUMENTATION REQUIREMENTS

The following instrumentation or equivalent are required for the Integrated Leak Rate Test and are recently calibrated (within 6 months of test or in accordance with the plant's/supplier's Test Equipment program) and the calibration dates are properly documented in this appendix.

1.1.1 Absolute Pressure

Quantity	2
Manufacturer	Paroscientific Inc.
Type	Precision pressure gauge Model 760-100A with Direct Pressure Readout and RS-232
Range	0 - 100 psia
Accuracy	± 0.010% Full Scale (+ 0.01 psia)
Repeatability	± 0.005% Full Scale (+ 0.005 psia)
Resolution	0.0001 psi

1.1.2 Drybulb Temperature

Quantity	30 planned (6 more than 1991 ILRT to minimize stabilization time)
Manufacturer	Graftel
Type	Model 9202 Thermistors
Range	50 - 150°F
Accuracy	±2.0°F
Repeatability	±0.01°F
Resolution	±0.001°F

1.1.3 Relative Humidity

Quantity	10
Manufacturer	Graftel
Type	Model 9203 Relative Humidity Sensors (Temperature compensated bulk polymer chip)
Range	10 - 90% RH
Accuracy	± 2.0% RH
Repeatability	± 0.10% RH
Resolution	0.5 %RH

1.1.4 Verification Flow

Quantity	2 (1 primary, 1 backup)
Manufacturer	Brooks
Type	Mechanical tube and float
Range	2.57-25.6 scfm (< 0-32 scfm)
Accuracy	± 2% full scale
Repeatability	± 0.2% full scale
Resolution	2% FS

1.1.5 Ambient Pressure

Quantity	1
Range	0 – 25 psia
Accuracy	± .1 psi

2.0 GENERAL

2.1 Sensors should be located in the middle of the air volume they are monitoring, away from structural steel and other heat sources or sinks wherever possible, to minimize thermal lag.

Drybulb Temperature Sensors = 30
Dewcells or Humidity Sensors = 10
Precision Pressure Sensors = 2
Flow Meters = 1 with 1 backup

Sensor locations are described in Step 6.0

3.0 SENSOR REJECTION INSTRUCTIONS

NOTE

Raw sensor data on functionally dependent parameters such as temperature, pressure and humidity should NOT be rejected solely based on statistical rejection techniques. Rather, sensor data may be rejected and NOT used in final calculation of air mass provided a good physical reason exists, such as loss of instrument power or erratic signal.

3.1 IF a sensor is rejected during the Type A test, THEN:

3.1.1 Which Sensor(s) rejected and cause SHALL be recorded in log of events.

3.1.2 The sensor's volume fraction SHALL be re-assigned the other sensors using volume fractions provided in the Sensor Failure Analysis, Table 1

3.1.3 All data points for Type A test, including those taken prior to rejection of sensor(s), SHALL be re-calculated with the sensor's input deleted. Use Single Failure Recommendations in Instrumentation Recommendations for Integrated Leak Rate Testing.

3.1.4 IF practical, THEN data from rejected sensor(s) should continue to be recorded for duration of both Type A test AND Verification Test.

3.1.5 IF a sensor is rejected during verification test, Type A test leakage rate, Verification Test leakage rate, and verification leakage rate limits SHALL be recalculated.

3.1.6 A sensor SHALL NOT be removed solely because its removal improves leakage rate result.

4.0 CALIBRATION INFORMATION

4.1 Test instrumentation have been calibrated within six months of start of ILRT, or at interval specified by the applicable Test Equipment QA program. Calibration SHALL be traceable to NIST

4.2 A calibration check has been completed at ambient conditions within 1 month of start of ILRT. Calibration of Field Standards SHALL be traceable to NIST.

Sensor S/N	MTE#	Cal. Date	Cal. Due Date	Verified By/Date Calibration	Std. Rdg.	Sensor Rdg.	Dev. from Std.	Cal. Check Verified By/Date	Accept. Criteria	Used As During ILRT:
0392016-19	GP-0014	9/14/05	9/13/06	JC 11/30/05	77.30	77.84	-0.54	JC 11/30/05	+ 2.0°F	TE-52
0392016-07	GP-0017	2/11/05	2/10/06	JC 11/30/05	77.20	78.01	-0.81	JC 11/30/05	+ 2.0°F	TE-35
0392016-44	GP-0019	2/11/05	2/10/06	JC 11/30/05	77.40	78.51	-1.11	JC 11/30/05	+ 2.0°F	SPARE
0392016-23	GP-0020	2/11/05	2/10/06	JC 11/30/05	77.30	76.91	0.39	JC 11/30/05	+ 2.0°F	TE-29
0392016-10	GP-0034	2/11/05	2/10/06	JC 11/30/05	77.20	78.75	-1.55	JC 11/30/05	+ 2.0°F	TE-SP3
0392016-29	GP-0039	2/11/05	2/10/06	JC 11/30/05	77.40	78.98	-1.58	JC 11/30/05	+ 2.0°F	TE-38
0392016-14	GP-0040	9/14/05	9/13/06	JC 11/30/05	77.10	77.15	-0.05	JC 11/30/05	+ 2.0°F	TE-SP1
0392016-35	GP-0042	2/11/05	2/10/06	JC 11/30/05	77.40	77.60	-0.20	JC 11/30/05	+ 2.0°F	TE-SP5
0392016-43	GP-0045	9/14/05	9/13/06	JC 11/30/05	77.40	77.48	-0.08	JC 11/30/05	+ 2.0°F	SPARE
0392016-08	GP-0051	2/11/05	2/10/06	JC 11/30/05	77.10	77.93	-0.83	JC 11/30/05	+ 2.0°F	TE-25
0392016-45	GP-0058	9/14/05	9/13/06	JC 11/30/05	77.50	77.20	0.30	JC 11/30/05	+ 2.0°F	SPARE

ATTACHMENT 5
ILRT MEASUREMENT SYSTEM INSTALLATION AND CHECKOUT

Sensor S/N	MTE#	Cal. Date	Cal. Due Date	Verified By/Date Calibration	Std. Rdg.	Sensor Rdg.	Dev. from Std.	Cal. Check Verified By/Date	Accept. Criteria	Used As During ILRT:
0392016-62	GP-0087	2/11/05	2/10/06	JC 11/30/05	78.60	77.11	1.49	JC 11/30/05	+ 2.0°F	TE-27
0392016-64	GP-0089	2/11/05	2/10/06	JC 11/30/05	78.50	76.93	1.57	JC 11/30/05	+ 2.0°F	TE-30
0392016-72	GP-0097	9/14/05	9/13/06	JC 11/30/05	77.10	77.14	-0.04	JC 11/30/05	+ 2.0°F	TE-26
0392016-74	GP-0099	2/11/05	2/10/06	JC 11/30/05	78.50	77.09	1.41	JC 11/30/05	+ 2.0°F	TE-39
0392016-76	GP-0101	2/11/05	2/10/06	JC 11/30/05	78.50	77.15	1.35	JC 11/30/05	+ 2.0°F	TE-33
0392016-77	GP-0102	9/14/05	9/13/06	JC 11/30/05	78.50	77.77	0.73	JC 11/30/05	+ 2.0°F	TE-37
0392016-78	GP-0103	2/11/05	2/10/06	JC 11/30/05	78.50	77.87	0.63	JC 11/30/05	+ 2.0°F	TE-55
0392016-81	GP-0106	2/11/05	2/10/06	JC 11/30/05	78.40	77.38	1.02	JC 11/30/05	+ 2.0°F	TE-31
0392016-82	GP-0107	2/11/05	2/10/06	JC 11/30/05	78.60	77.41	1.19	JC 11/30/05	+ 2.0°F	TE-34
0392016-83	GP-0108	9/14/05	9/13/06	JC 11/30/05	78.10	78.01	0.09	JC 11/30/05	+ 2.0°F	TE-32
0392016-85	GP-0110	2/11/05	2/10/06	JC 11/30/05	78.40	76.83	1.57	JC 11/30/05	+ 2.0°F	TE-21
0392016-88	GP-0113	2/11/05	2/10/06	JC 11/30/05	78.10	78.03	0.07	JC 11/30/05	+ 2.0°F	TE-24
0392016-89	GP-0114	2/11/05	2/10/06	JC 11/30/05	78.50	76.85	1.65	JC 11/30/05	+ 2.0°F	TE-20
0392016-91	GP-0116	9/14/05	9/13/06	JC 11/30/05	78.40	77.19	1.21	JC 11/30/05	+ 2.0°F	TE-SP6

ATTACHMENT 5
ILRT MEASUREMENT SYSTEM INSTALLATION AND CHECKOUT

Sensor S/N	MTE#	Cal. Date	Cal. Due Date	Verified By/Date Calibration	Std. Rdg.	Sensor Rdg.	Dev. from Std.	Cal. Check Verified By/Date	Accept. Criteria	Used As During ILRT:
0392016-94	GP-0119	2/11/05	2/10/06	JC 11/30/05	78.30	77.65	0.65	JC 11/30/05	+ 2.0°F	TE-SP2
0392016-95	GP-0120	2/11/05	2/10/06	JC 11/30/05	78.30	77.94	0.36	JC 11/30/05	+ 2.0°F	TE-53
0392016-97	GP-0122	2/11/05	2/10/06	JC 11/30/05	78.50	77.48	1.02	JC 11/30/05	+ 2.0°F	TE-23
59112-11	GP-0124	9/14/05	9/13/06	JC 11/30/05	78.10	76.48	1.62	JC 11/30/05	+ 2.0°F	TE-SP4
59112-17	GP-0125	2/11/05	2/10/06	JC 11/30/05	78.10	77.35	0.75	JC 11/30/05	+ 2.0°F	TE-36
59112-18	GP-0126	2/11/05	2/10/06	JC 11/30/05	78.10	77.06	1.04	JC 11/30/05	+ 2.0°F	TE-22
0392030-5	GP-0155	2/11/05	2/10/06	JC 11/30/05	78.10	77.92	0.18	JC 11/30/05	+ 2.0°F	TE-28
0392030-7	GP-0157	2/11/05	2/10/06	JC 11/30/05	78.10	76.84	1.26	JC 11/30/05	+ 2.0°F	TE-54
	This		row		Left			blank		
0392016-58	GP-0007	9/22/05	3/23/06	JC 11/30/05	67.60	70.94	-3.34	JC 11/30/05	+ 5%RH	**HE-44**
0392016-54	GP-0064	9/22/05	3/23/06	JC 11/30/05	69.10	68.76	0.34	JC 11/30/05	+ 5%RH	**HE-43**
0392016-100	GP-0129	9/22/05	3/23/06	JC 11/30/05	68.00	69.67	-1.67	JC 11/30/05	+ 5%RH	**SPARE**
0392016-102	GP-0131	9/22/05	3/23/06	JC 11/30/05	68.10	71.31	-3.21	JC 11/30/05	+ 5%RH	**HE-48**
0392016-107	GP-0136	9/22/05	3/23/06	JC 11/30/05	29.00	30.49	-1.49	JC 11/30/05	+ 5%RH	**HE-41**

ATTACHMENT 5
ILRT MEASUREMENT SYSTEM INSTALLATION AND CHECKOUT

Sensor S/N	MTE#	Cal. Date	Cal. Due Date	Verified By/Date Calibration	Std. Rdg.	Sensor Rdg.	Dev. from Std.	Cal. Check Verified By/Date	Accept. Criteria	Used As During ILRT:
0392016-111	GP-0140	9/22/05	3/23/06	JC 11/30/05	67.50	71.93	-4.43	JC 11/30/05	+ 5%RH	**SPARE**
0392016-113	GP-0142	9/22/05	3/23/06	JC 11/30/05	68.90	68.29	0.61	JC 11/30/05	+ 5%RH	**SPARE**
0392016-115	GP-0144	9/22/05	3/23/06	JC 11/30/05	29.30	30.03	-0.73	JC 11/30/05	+ 5%RH	**HE-50**
0392016-116	GP-0145	9/22/05	3/23/06	JC 11/30/05	70.40	73.11	-2.71	JC 11/30/05	+ 5%RH	**HE-47**
0392016-117	GP-0146	9/22/05	3/23/06	JC 11/30/05	68.00	72.22	-4.22	JC 11/30/05	+ 5%RH	**HE-45**
0392016-118	GP-0147	9/22/05	3/23/06	JC 11/30/05	68.60	72.51	-3.91	JC 11/30/05	+ 5%RH	**SPARE**
0392030-11	GP-0149	9/22/05	3/23/06	JC 11/30/05	67.10	70.18	-3.08	JC 11/30/05	+ 5%RH	**HE-42**
0392030-9	GP-0151	9/22/05	3/23/06	JC 11/30/05	67.20	70.87	-3.67	JC 11/30/05	+ 5%RH	**HE-46**
0392016-12	GP-0154	9/22/05	3/23/06	JC 11/30/05	69.00	71.94	-2.94	JC 11/30/05	+ 5%RH	**HE-49**
	This		Row			left		blank		
61730	GP-0171	9/14/05	3/13/05	JC 11/30/05	14.7200	14.7202	0.0002	JC 11/30/05	± 005 psia	
77077	GP-0172	9/14/05	3/13/05	JC 11/30/05	14.7202	14.7200	0.0002	JC 11/30/05	± 005 psia	
U4630029	GP-0168	5/5/05	5/4/06	JC 11/30/05	N/A	N/A	N/A	JC 11/30/05		
	This		Row			left		blank		

ATTACHMENT 5
ILRT MEASUREMENT SYSTEM INSTALLATION AND CHECKOUT

Sensor S/N	MTE#	Cal. Date	Cal. Due Date	Verified By/Date Calibration	Std. Rdg.	Sensor Rdg.	Dev. from Std.	Cal. Check Verified By/Date	Accept. Criteria	Used As During ILRT:
0105040283 965/001	ii-0001	11/3/05	11/2/06	JC 11/30/05	N/A	N/A	N/A	JC 11/30/05	± 5%FS	
0105040283 965/002	ii-0002	11/3/05	11/2/06	JC 11/30/05	N/A	N/A	N/A	JC 11/30/05	± 5%FS	

no further entries this page JC

NOTES:

1. ALL sensing line tubing (pressure and flow) should be pressurized to test pressure and snooped for leaks. This can be done during pressurization if sensing line can be isolated for repairs.

2. The acceptance criteria for the calibration check for the pressure gauges is a limitation on the variance between the two corrected (if applicable) gauge readings when compared against each other. The check can be performed at atmospheric pressure or test pressure. A comparison is made because most plants do NOT possess field standards of equivalent or better accuracy to use during a calibration check due to the extremely high accuracy of the ILRT gauges.

3. Per ANSI 56.8-1994, para. 4.2.1, Pretest checks are NOT required for mechanical flow rate device (e.g., rotameters), however they are highly recommended. Flow meter calibration checks are also a simple comparison, typically against a known valve position. The calibration check should be preceeded by a line "flush" with air to verify NO particulates or moisture exists in the sensing line. The calibration check should be performed at a flow rate equivalent to L0 to verify that tubing size is adequate to pass the desired flow rate with existing bends, valves, and pressure drops.

4. The Paroscientific precision pressure gauges are to be installed in the locations provided for by the client. They will assume the nomenclature PI-1 and PI-2, and be connected to plant tubing at LRV-39 and LRV-40 as per FD-302-722.

5. The two rotameters to be used for the Verification test will assume the nomenclature FE-4 and FE-5, and are to be connected at LRV-65 and LRV-64 per FD-302-722. Do NOT connect tubing from LRV-66 and LRV-67 to the outlets of the rotameters.

5.0 INSTRUMENTATION INSTALLATION

SENSOR STRING TERMINATION RECORD

STRING #		INSIDE WIRE	INSTALLED INIT/DATE	REMOVED INIT/DATE		OUTSIDE WIRE #	INSTALLED INIT/DATE	REMOVED INIT/DATE
#1 IN (A) (49)	A	TB Term. 1 wire #1	gda 11-18-05	jd 12-5-5	A	Term. 17 (Blk) on TB-7	gda 11-16-05	jd 12-5-5
	B	TB Term. 2 wire # 2	gda 11-18-05	jd 12-5-5	B	Term. 18 (red) on TB-7	gda 11-16-05	jd 12-5-5
	+	TB Term. 3 wire # 3	gda 11-18-05	jd 12-5-5	+	Term. 15 (red) on TB-7	gda 11-16-05	jd 12-5-5
	-	TB Term. 4 wire # 4	gda 11-18-05	jd 12-5-5	-	Term. 16 (Blk) on TB-7	gda 11-16-05	jd 12-5-5
	S	TB Term. 5 ~~wire~~ (shld) gda 11-18-05	gda 11-18-05	jd 12-5-5	S	Term. 14 (shld) on TB-7	gda 11-16-05	jd 12-5-5

SENSOR STRING TERMINATION RECORD

STRING #		INSIDE WIRE	INSTALLED INIT/DATE	REMOVED INIT/DATE		OUTSIDE WIRE #	INSTALLED INIT/DATE	REMOVED INIT/DATE
#1 OUT (B) (44)	A	TB Term. 1 wire #1	gda 11-18-05	jd 12-5-5	A	Term. 17 (red) on TB-6	gda 11-15-05	jd 12-5-5
	B	TB Term. 2 wire #2	gda 11-18-05	jd 12-5-5	B	Term. 18 (Blk) on TB-6	gda 11-15-05	jd 12-5-5
	+	TB Term 3 wire #3	gda 11-18-05	jd 12-5-5	+	Term. 15 (red) on TB-6	gda 11-15-05	jd 12-5-5
	-	TB Term 4 wire #4	gda 11-18-05	jd 12-5-5	-	Term. 16 (Blk) on TB-6	gda 11-15-05	jd 12-5-5
	S	TB Term 5 (shld)	gda 11-18-05	jd	S	Term. 14 (shld) on TB-6	gda 11-15-05	jd 12-5-5

SENSOR STRING TERMINATION RECORD

STRING #	INSIDE WIRE		INSTALLED INIT/DATE	REMOVED INIT/DATE	OUTSIDE WIRE #		INSTALLED INIT/DATE	REMOVED INIT/DATE
#2 IN (42) (A)	A	TB Term. 1 wire #1	gda 11-18-05	jd 12-5-5	A	Term. 8 (red) on TB-6	gda 11-16-05	jd 12-5-5
	B	TB Term. 2 wire #2	gda 11-18-05	jd 12-5-5	B	Term. 9 (Blk) on TB-6	gda 11-16-05	jd 12-5-5
	+	TB Term. 3 wire #3	gda 11-18-05	jd 12-5-5	+	Term 6 (red) on TB-6	gda 11-16-05	jd 12-5-5
	-	TB Term. 4 wire #4	gda 11-18-05	jd 12-5-5	-	Term. 7 (Blk) on TB-6	gda 11-16-05	jd 12-5-5
	S	TB Term. 5 (shld)	gda 11-18-05	jd 12-5-5	S	Term. 5 (shld) TB-6	gda 11-16-05	jd 12-5-5

SENSOR STRING TERMINATION RECORD

STRING #	INSIDE WIRE		INSTALLED INIT/DATE	REMOVED INIT/DATE	OUTSIDE WIRE #		INSTALLED INIT/DATE	REMOVED INIT/DATE
#2 OUT (50) (B)	A	TB Term. 1 wire #1	gda 11-18-05	jd 12-5-5	A	Term. 21 (red) on TB-7	gda 11-16-05	jd 12-5-5
	B	TB Term 2 wire #2	gda 11-18-05	jd 12-5-5	B	Term. 22 (Blk) on TB-7	gda 11-16-05	jd 12-5-5
	+	TB Term 3 wire #3	gda 11-18-05	jd 12-5-5	+	Term. 19 (red) on TB-7	gda 11-16-05	jd 12-5-5
	-	TB Term. 4 wire #4	gda 11-18-05	jd 12-5-5	-	Term. 20 (Blk) on TB-7	gda 11-16-05	jd 12-5-5
	S	TB Term 5 (shld)	gda 11-18-05	jd 12-5-5	S	Term. 23 (shld) on TB-7	gda 11-16-05	jd 12-5-5

SENSOR STRING TERMINATION RECORD

STRING #	INSIDE WIRE		INSTALLED INIT/DATE	REMOVED INIT/DATE	OUTSIDE WIRE #		INSTALLED INIT/DATE	REMOVED INIT/DATE
(4) #3 IN (A)	A	TB Term. 1 WIRE #1	gda 11-18-05	[illegible] 12-5-5	A	Term 3 (wht) on TB-6	gda 11-16-05	[illegible] 12-5-5
	B	TB Term 2 WIRE #2	gda 11-18-05	[illegible] 12-5-5	B	Term. 4 (Blk) on TB6	gda 11-16-05	[illegible] 12-5-5
	+	TB Term 3 WIRE #3	gda 11-18-05	[illegible] 12-5-5	+	Term. 1 (wht) on TB-6	gda 11-16-05	[illegible] 12-5-5
	-	TB Term 4 WIRE #4	gda 11-18-05	[illegible] 12-5-5	-	Term. 2 (Blk) on TB-6	gda 11-16-05	[illegible] 12-5-5
	S	TB Term 5 (shld)	gda 11-18-05	[illegible] 12-5-5	S	Term. 5 (shld) on TB-6	gda 11-16-05	[illegible] 12-5-5

SENSOR STRING TERMINATION RECORD

STRING #	INSIDE WIRE		INSTALLED INIT/DATE	REMOVED INIT/DATE	OUTSIDE WIRE #		INSTALLED INIT/DATE	REMOVED INIT/DATE
#3 OUT	A				A			
	B				B			
	+				+			
	-				-			
	S				S			

SENSOR STRING TERMINATION RECORD								
STRING #	INSIDE WIRE		INSTALLED INIT/DATE	REMOVED INIT/DATE	OUTSIDE WIRE #		INSTALLED INIT/DATE	REMOVED INIT/DATE
#4 IN	A				A			
	B				B			
	+				+			
	-				-			
	S				S			

SENSOR STRING TERMINATION RECORD								
STRING #	INSIDE WIRE		INSTALLED INIT/DATE	REMOVED INIT/DATE	OUTSIDE WIRE #		INSTALLED INIT/DATE	REMOVED INIT/DATE
#4 OUT	A				A			
	B				B			
	+				+			
	-				-			
	S				S			

6.0 INSTRUMENT LOCATIONS

6.1 Instrument locations are approximate and may be changed at Test Supervisor discretion. New locations will be recorded below, evaluated and documented in Attachment 7.

6.2 Since temperature stratifies by elevation, azimuth and radius are NOT critical dimensions. Sensors should be placed away from heat sources and heat sinks such as concrete walls and steel I-beams.

6.3 Additional variations are permitted if existing location is in a high radiation field, inaccessible location, or near a heat sink or heat source.

6.4 Volume Weighting Fractions provided have been properly input into ILRT Software

* See evaluat end of section

SENSOR LOCATIONS AND VOLUME FRACTIONS									
TEST EQUIPMENT	ELEVATION		AZIMUTH		RADIUS		VWF		SENSOR S/N
	Original	Actual	Original	Actual	Original	Actual	Original	Actual	
TE1 (LR-20-TE)	105'	270'	120o (ESE)	225°	60'	40'	0.0368	0.0213	GP-0089
TE2 (LR-21-TE)	105'	270'	220o (SSW)	225°	60'	20'	0.0368	0.0213	GP-0040
TE3 (LR-22-TE)	105'	270'	320o (WNW)	45°	62'	20' ~~20'~~	0.0367	0.0212	GP-0119
TE4 (LR-23-TE)	108'	270'	180o (S)	45°	~40' - Outer D-Ring wall	40'	0.0588	0.0213	GP-0108
TE5 (LR-24-TE)	140'	260'	120o (ESE)	225°	60'	40'	0.0588	0.0212	GP-0034
TE6 (LR-25-TE)	140'	255'	220o (SSW)	45°	60'	40'	0.0588	0.0212	GP-0124
TE7 (LR-26-TE)	140'	240'	320o (WNW)	225°	60'	40'	0.0165	0.0361	GP-0102
TE8 (LR-27-TE)	140'	235'	10o (N)	45°	~40' - Outer D-Ring wall	40'	0.0547	0.0360	GP-0101
TE9 (LR-28-TE)	186'	225'	100o (E)	225°	60'	40'	0.0547	0.0360	GP-0039
TE10 (LR-29-TE)	180'	230'	220o (SSW)	45°	20' Off hndrl W-side, B D-ring	20'	0.0638	0.0361	GP-0125
TE11 (LR-30-TE)	260'	210'	290o (WNW)	225°	~20'	40'	0.0547	0.0361	GP-0017
TE12 (LR-31-TE)	180'	220'	45o (NE)	225°	~40'	20'	0.0637	0.0360	GP-0099
TE13 (LR-32-TE)	260'	220'	180o (S)	45°	~20'	20'	0.0361	0.0361	GP-0107
TE14 (LR-33-TE)	244'	195'	50o (NE)	225°	60'	40'	0.0361	0.0391	GP-0020

ATTACHMENT 5
ILRT MEASUREMENT SYSTEM INSTALLATION AND CHECKOUT

SENSOR LOCATIONS AND VOLUME FRACTIONS									
TEST EQUIPMENT	ELEVATION		AZIMUTH		RADIUS		VWF		SENSOR S/N
	Original	Actual	Original	Actual	Original	Actual	Original	Actual	
TE15 (LR-34-TE)	220'	205'	100o (E)	45°	~45'	40'	0.0361	0.0390	GP-0116
TE16 (LR-35-TE)	215'	180'	225o (SSW)	225°	55'	40'	0.0361	0.0390	GP-0103
TE17 (LR-36-TE)	243'	190'	180o (S)	45°	65'	40'	0.0361	0.0391	GP-0155
TE18 (LR-37-TE)	239'	165'	280o (W)	225°	65'	40'	0.0361	0.0390	GP-0042
TE19 (LR-38-TE)	215'	175'	320o (WNW)	45°	60'	40'	0.0360	0.0390	GP-0157
TE20 (LR-39-TE)	244'	160'	0o (N)	45°	65'	40'	0.0360	0.0391	GP-0106
TE21 (LR-52-TE)	108'	140'	10o (N)	35°	~40' Inside, N end SG-A D-ring	60'	0.0165	0.0588	GP-~~0051~~ 0097 RWC 12-3-05
TE22 (LR-53-TE)	140'	140'	170o (S)	135°	Outer Rx Wall SG-B D-Ring	60'	0.0135	0.0588	GP-0051
TE23 (LR-54-TE)	180'	140'	225o (SSW)	190°	60'	~20'	0.0546	0.0135	GP-0120
TE24 (LR-55-TE)	180'	140'	320o (WNW)	250°	60'	60'	0.0546	~~0.0588~~ 0.0165	GP-0087
TE25 (LR-20-TE)		140'		240°		60'		0.0588	GP-0113
TE26 (LR-20-TE)		105'		40°		55'		0.0367	GP-0126
TE27 (LR-20-TE)		105'		140°		50'		0.0388	GP-0110
TE28 (LR-20-TE)		108'		180°		~40'		0.0135	GP-0122

SENSOR LOCATIONS AND VOLUME FRACTIONS									
TEST EQUIPMENT	ELEVATION		AZIMUTH		RADIUS		VWF		SENSOR S/N
	Original	Actual	Original	Actual	Original	Actual	Original	Actual	
TE29 (LR-20-TE)		108'		350°		~40'		0.0165	GP-0014
TE30 (LR-20-TE)		105'		240°		60'		0.0358	GP-0114
						VWF TOTAL	1.00		
HE1 (LR-41-HE)	105'	270'	170o (S)	45°	~40' - Outer D-Ring wall	40'	0.0270	0.1267	GP-0146
HE2 (LR-42-HE)	105'	245'	270o (W)	225°	62'	40'	0.1103	0.1267	GP-0151
HE3 (LR-43-HE)	140'	215'	270o (W)	225°	~15'	40'	0.1764	0.1266	GP-0145
HE4 (LR-44-HE)	140'	210'	10o (N)	45°	~40' - Outer D-Ring wall	40'	0.0330	*0.0911 *0.1366	GP-0131
HE5 (LR-45-HE)	244'	170'	15o (N)	225°	65'	40'	0.1267	*0.0911 *0.0000	GP-0154
HE6 (LR-46-HE)	215	180'	320o (WNW)	45°	60'	40'	0.1267	*0.0911 *0.1367	GP-0144
HE7 (LR-47-HE)	215	140'	260o (W)	135°	60'	60'	0.1266	0.1764	GP-0069
HE8 (LR-48-HE)	200'	140'	120o (ESE)	350°	60'	~40'	0.0911	0.0330	GP-0007
HE9 (LR-49-HE)	180'	105'	0o (N)	40°	~20'	55'	0.0911	0.1163	GP-0149
HE10 (LR-50-HE)	180'	108'	170o (S)	180°	Outer Rx Wall SG-B D-Ring	40'	0.911	0.0270	GP-0136
						VWF TOTAL	1.00	1.0000	

*HE5 malfunctioned on installation, no time to replace - deleted from data sort. Re-assigned VWF to HE4 and HE6

ATTACHMENT 6

INTENTIONALLY LEFT BLANK

ATTACHMENT 7
TEST EXCEPTIONS LOG
(Page 1 of 1)

TEST EXCEPTION LOG — PAGE 1 OF 1

Date/Time	Proc. Step	Initials	Description/Resolution
11/30/05 0512	AH 3C pg 118-119	AB	Change valve test position to closed IAW with normal alignment with gage installed
2021 12-2-05 / 12-2-05 2205	AH 3B pg 115	AB	Change from venting to not required based on input from vendor for being a liquid system
12-2-05 / 2345	AH 3C pg 124	AB	Changed from ILRT pen 430 to taking a penalty and not draining the penetration for test.
12/3/05 / 2030	AH 3A pg 87	TMA.	Opened LRV-45 & LRV-46 to allow path to Verification flow instruments. No impact on ILRT. This was done for Chemistry Sample Step 4.2.4.
12-4-05 / 0324	pg 117	AB	Close SAV-603, 601 and close SAV-75, 76 to ID possible leakage from inboard Reactor and valve with pressure gauge, SAV-72 + SAV-74 have been opened.
12/4/05 0630	AH 3B pg 95	TMA.	Extended PEN-330 & PEN-331 isolation boundary to SWV-107 & SWV-108. UPDATE: Valves were already closed by clearance. Ops is to cinch down on manual valves.

Make additional copies as necessary

ATTACHMENT 8
VALVE LINEUP ALTERATION LOG
(Page 1 of 1)

COMPONENT (Indiv. Comp.)	INSIDE CNTMNT?	ILRT POSITION	RE-POSITIONED BY (Name/Ext.)	RESTORED TO ILRT POSITION (Initials/Date)	COMMENTS/DISPOSITION
RCV-6	yes	closed	Gary Bisbe	BJJ/12/03/05	
SAV-603	NO	OPEN	C. Littrell	159	
SAV-601		OPEN	C. Littrell		
SAV-75			C. Littrell		ONLY LISTED IN CONTINGENCIES VALVES WERE ORIGINALLY CLOSED
SAV-74			C. Littrell		
SAV-72			C. Littrell		
SAV-74	NO		C. Littrell		

This form is used to provide a mechanism to track temporary modifications to "completed" valve lineups/component status necessitated by ongoing outage activities during ILRT preparation. The form is used because many lineups/components are positioned via administrative procedure, SOP or other means, without tags. The ILRT Test Supervisor may elect to leave certain components in the requested position after reviewing them for potential impact on the ILRT.

Make additional copies of this form as necessary.

159 Valves remain in position during test. Restored via Attachment 3B

12-5-5

ATTACHMENT 9
CONTAINMENT PENETRATION SUMMARY

PENETRATION STATUS DURING ILRT

SYSTEM	PEN#	PEN. DESCRIPTION	TEST STATUS	APP. J PRGM STATUS	Penalty Addn.? (if yes = value)	LAST TEST DATENote1	As-Left MPL	As-Found MPL	Leakage Savings
Main Steam	105	MSL A-2	Normal Standby L/U	N/R					
Main Steam	106	MSL A-1	Normal Standby L/U	N/R					
Main Steam	107	MSL B-2	Normal Standby L/U	N/R					
Main Steam	201	MSL B-1	Normal Standby L/U	N/R					
Main Steam	314	RCSG 1-B Drain	Normal Standby L/U, Bottled Up for PI	N/R					
Main Steam	316	RCSG 1-A Sec Vent	Normal Standby L/U	N/R					
Main Steam	318	RCSG 1-A Drain	Normal Standby L/U, Bottled Up for PI	N/R					
Main Steam	320	RCSG 1-B Sec Vent	Normal Standby L/U	N/R					
Main Steam	427	RCSG 1-B Drain	Normal Standby L/U	N/R					
Main Steam	428	RCSG 1-A Drain	Normal Standby L/U	N/R					
Feedwater & Emerg. FW	108	Main FW "B"	Normal Standby L/U	N/R					
Feedwater & Emerg. FW	109	EFW "B"	Normal Standby L/U	N/R					
Feedwater & Emerg. FW	423	Main FW "A"	Normal Standby L/U	N/R					
Feedwater & Emerg. FW	424	EFW "A"	Normal Standby L/U	N/R					
Condensate & Demin Water	117	Demin Wtr to CNTMNT	Take Penalty	Type C	467	11/11/05	467	467	0
Instrument & Station Air	110	Station Air	ILRT is Testing	Type C		10/6/05	176.71	176.71	0

ATTACHMENT 9
CONTAINMENT PENETRATION SUMMARY

SYSTEM	PEN#	PEN. DESCRIPTION	TEST STATUS	APP. J PRGM STATUS	Penalty Addn.? (if yes = value)	LAST TEST DATENote1	As-Left MPL	As-Found MPL	Leakage Savings
Instrument & Station Air	111	Instrument Air	ILRT is Testing	Type C		11/4/05	24.75	24.75	0
Instrument & Station Air	112	Instrument Air	ILRT is Testing	Type C		11/4/05	2	2	0
Nuclear Services Closed Cycle Cooling	321	Letdown Clr 3B Supply	Normal Standby L/U	N/R					
Nuclear Services Closed Cycle Cooling	322	Letdown Clr 3B Return	Normal Standby L/U	N/R					
Nuclear Services Closed Cycle Cooling	360	Letdown Clr 3A/3C Supply	Normal Standby L/U	N/R					
Nuclear Services Closed Cycle Cooling	361	Letdown Clr 3A/3C Return	Normal Standby L/U	N/R					
Nuclear Services Closed Cycle Cooling	330	CRDMS Supply	Normal Standby L/U	N/R					
Nuclear Services Closed Cycle Cooling	331	CRDMS Return	Normal Standby L/U	N/R					
Nuclear Services Closed Cycle Cooling	358	RB Vent Fan 3C Supply	Normal Standby L/U	N/R					
Nuclear Services Closed Cycle Cooling	359	RB Vent Fan 3C Return	Normal Standby L/U	N/R					
Nuclear Services Closed Cycle Cooling	368	RB Vent Fan 3A Supply	Normal Standby L/U	N/R					
Nuclear Services Closed Cycle Cooling	369	RB Vent Fan 3A Return	Normal Standby L/U	N/R					
Nuclear Services Closed Cycle Cooling	370	RB Vent Fan 3B Supply	Normal Standby L/U	N/R					
Nuclear Services Closed Cycle Cooling	371	RB Vent Fan 3B Return	Normal Standby L/U	N/R					
Nuclear Services Closed Cycle Cooling	326	RCP 1C Return	Normal Standby L/U	N/R					
Nuclear Services Closed Cycle Cooling	325	RCP 1C Supply	Normal Standby L/U	N/R					
Nuclear Services Closed Cycle Cooling	363	RCP 1D Return	Normal Standby L/U	N/R					
Nuclear Services Closed Cycle Cooling	362	RCP 1D Supply	Normal Standby L/U	N/R					

ATTACHMENT 9
CONTAINMENT PENETRATION SUMMARY

SYSTEM	PEN#	PEN. DESCRIPTION	TEST STATUS	APP. J PRGM STATUS	Penalty Addn.? (if yes = value)	LAST TEST DATENote1	As-Left MPL	As-Found MPL	Leakage Savings
Nuclear Services Closed Cycle Cooling	324	RCP 1A Return	Normal Standby L/U	N/R					
Nuclear Services Closed Cycle Cooling	323	RCP 1A Supply	Normal Standby L/U	N/R					
Nuclear Services Closed Cycle Cooling	365	RCP 1B Return	Normal Standby L/U	N/R					
Nuclear Services Closed Cycle Cooling	364	RCP 1B Supply	Normal Standby L/U	N/R					
Spent Fuel Cooling	347	Fuel Trnsfr Clg Purification	Take Penalty	Type C	2	11/15/05	2	2	0
Spent Fuel Cooling	348	Fuel Transfer Tube	ILRT is Testing	Type B		12/2/05	2	2	0
Spent Fuel Cooling	436	Fuel Transfer Tube	ILRT is Testing	Type B		12/2/05	2	14.2	12.2
Decay Heat Removal	329	PZR Sprayline	Take Penalty	Type C	40.7	11/14/05	40.7	40.7	0
Decay Heat Removal	345	RB Sump Recirc	Normal Standby L/U	N/R					
Decay Heat Removal	346	RB Sump Recirc	Normal Standby L/U	N/R					
Reactor Coolant	N/A								
Makeup & Purification	333	Letdown to Purif Demin	Take Penalty	Type C	2	11/7/05	2	23	21
Makeup & Purification	353	HPI to RB Sump	Take Penalty	Type C	86.51	10/11/03	86.51	86.51	0
Makeup & Purification	377	RCP Seal Bleedoff	Take Penalty	Type C	30.47	11/8/05	30.47	543.6	513.13
Makeup & Purification	338	RCP Seal Supply	Normal Standby L/U	N/R					
Makeup & Purification	434	HPCI	Normal Standby L/U	N/R					
Makeup & Purification	435	Makeup & HPCI	Normal Standby L/U	N/R					
Makeup & Purification	336	HPCI	Normal Standby L/U	N/R					

ATTACHMENT 9
CONTAINMENT PENETRATION SUMMARY

SYSTEM	PEN#	PEN. DESCRIPTION	TEST STATUS	APP. J PRGM STATUS	Penalty Addn.? (if yes = value)	LAST TEST DATENote1	As-Left MPL	As-Found MPL	Leakage Savings
Makeup & Purification	337	HPCI	Normal Standby L/U	N/R					
Liquid Sampling	425	PASS	Take Penalty	Pen425a Type C Pen425b	75.18 166.95	11/15/05 11/15/05	75.18 166.95	75.18 166.95	0 0
Liquid Sampling	439	PZR & RCS Sample	Take Penalty	Type C	70.69	11/15/05	70.69	7573.21	7502.52
Liquid Sampling	440	SG 3A Sample	Take Penalty	Type C	4.79	115/05	4.79	4.79	0
Liquid Sampling	441	SG 3B Sample	Take Penalty	Type C	2.11	11/3/05	2.11	2.11	0
Nitrogen	317	N2 to SG Secondary	Take Penalty	Type C	2	11/2/05	2	2	0
Nitrogen	355	N2 to RCS	Take Penalty	Type C	550	11/2/05	550	3037	2487
Nitrogen	372	N2 to RCDT	Take Penalty	Type C	2	11/2/05	2	2	0
Core Flood	123	N2 to CFT 1A	Take Penalty	Type C	33	11/16/05	33	2	∅
Core Flood	124	N2 to CFT 1B	Take Penalty	Type C	55.9	11/7/05	55.9	55.9	0
Core Flood	350	CFT M/U	Take Penalty	Type C	456	11/7/05	456	456	0
Core Flood	351	CFT Vent	Take Penalty	Type C	4	11/10/05	4	15.9	11.9
Core Flood	352	CFT Sample/Bleed	Take Penalty	Type C	18.71	11/10/05	18.71	18.71	0
Core Flood	373	CFT M/U	Take Penalty	Type C	8.05	11/10/05	8.05	8.05	0
Liquid Waste Disposal	339	RB Sump	Take Penalty	Type C	2	11/17/05	2	2	0
Liquid Waste Disposal	349	RCDT Vent	Take Penalty	Type C	2	11/14/05	2	2	0
Liquid Waste Disposal	374	RCDT Drain	Take Penalty	Type C	2	11/8/05	2	2	0
Gas Waste Disposal	354	RCS Equipment Vents	Take Penalty	Type C	2	11/4/05	2	2	0

ATTACHMENT 9
CONTAINMENT PENETRATION SUMMARY

SYSTEM	PEN#	PEN. DESCRIPTION	TEST STATUS	APP. J PRGM STATUS	Penalty Addn.? (if yes = value)	LAST TEST DATENote1	As-Left MPL	As-Found MPL	Leakage Savings
Containment Monitoring	306	PASS	ILRT is Testing	Type C		11/04/05	6	6	0
Containment Monitoring	315	RB Air Sample	ILRT is Testing	Type C		10/15/03	2	2	0
Containment Monitoring	332	RB Air Sample Return	ILRT is Testing	Type C		10/15/03	2	2	0
Containment Monitoring	356	RB Air Sample	ILRT is Testing	Type C		11/04/05	121.34	121.34	0
Containment Monitoring	376	Cntmnt. Mon. Sample Return	ILRT is Testing	Type C		11/10/05	8.05	8.05	0
Reactor Building Spray	340	RB Spray	Normal Standby L/U	N/R					
Reactor Building Spray	341	RB Spray	Normal Standby L/U	N/R					
RB Press Sensing & Testing, IA	426	RB Press Sensing	ILRT is Testing	N/R					
RB Press Sensing & Testing, IA	442	RB Press Sensing	ILRT is Testing	N/R					
RB Press Sensing & Testing, IA	429	RB Press Sensing	ILRT is Testing	N/R					
RB Press Sensing & Testing, IA	319	RB Press Sensing	ILRT is Testing	N/R					
Leak Rate & Post Accident H2 Purge	116	RB Leak Rate	Take Penalty	Type C	3.75	11/8/05	3.75	3.75	0
Leak Rate & Post Accident H2 Purge	121	RB Leak Rate, H2 Recombiner	ILRT is Testing	Type C	65.38 *	10/8/03 10/8/03	995 65.38	995 65.38	0 0
Leak Rate & Post Accident H2 Purge	122	RB Leak Rate, H2 Recombiner	ILRT is Testing	Type C		10/9/05	68.59	68.59	0
Leak Rate & Post Accident H2 Purge	125	H2 Recombiner Return	ILRT is Testing	Type C		10/8/03 10/8/03	397 445	397 445	0
Leak Rate & Post Accident H2 Purge	202	RB Leak Rate	Take Penalty	Type C	35.26	11/8/05	35.26	35.26	0
Leak Rate & Post Accident H2 Purge	305	PASS	ILRT is Testing	Type C		11/3/05	308	308	0
Leak Rate & Post Accident H2 Purge	306	PASS	ILRT is Testing	Type C		11/4/05	56.47	56.47	0

* LRV-50/36 penalty = 65.38
LRV-89/90 ILRT is Testing

ATTACHMENT 9
CONTAINMENT PENETRATION SUMMARY

SYSTEM	PEN#	PEN. DESCRIPTION	TEST STATUS	APP. J PRGM STATUS	Penalty Addn.? (if yes = value)	LAST TEST DATENote1	As-Left MPL	As-Found MPL	Leakage Savings
Containment Monitoring	306	PASS	ILRT is Testing	Type C		11/04/05	6	6	0
Containment Monitoring	315	RB Air Sample	ILRT is Testing	Type C		10/15/03	2	2	0
Containment Monitoring	332	RB Air Sample Return	ILRT is Testing	Type C		10/15/03	2	2	0
Containment Monitoring	356	RB Air Sample	ILRT is Testing	Type C		11/04/05	121.34	121.34	0
Containment Monitoring	376	Cntmnt. Mon. Sample Return	ILRT is Testing	Type C		11/10/05	8.05	8.05	0
Reactor Building Spray	340	RB Spray	Normal Standby L/U	N/R					
Reactor Building Spray	341	RB Spray	Normal Standby L/U	N/R					
RB Press Sensing & Testing, IA	426	RB Press Sensing	ILRT is Testing	N/R					
RB Press Sensing & Testing, IA	442	RB Press Sensing	ILRT is Testing	N/R					
RB Press Sensing & Testing, IA	429	RB Press Sensing	ILRT is Testing	N/R					
RB Press Sensing & Testing, IA	319	RB Press Sensing	ILRT is Testing	N/R					
Leak Rate & Post Accident H2 Purge	116	RB Leak Rate	Take Penalty	Type C	3.75	11/8/05	3.75	3.75	
Leak Rate & Post Accident H2 Purge	121	RB Leak Rate, H2 Recombiner	ILRT is Testing	Type C	65.38 *	10/8/03 10/8/03	995 65.38	995 65.38	0
Leak Rate & Post Accident H2 Purge	122	RB Leak Rate, H2 Recombiner	ILRT is Testing	Type C		10/9/05	68.59	68.59	0
Leak Rate & Post Accident H2 Purge	125	H2 Recombiner Return	ILRT is Testing	Type C		10/8/03 10/8/03	397 445	397 445	0 0
Leak Rate & Post Accident H2 Purge	202	RB Leak Rate	Take Penalty	Type C	35.26	11/8/05	BT 2/20/06 ~~35.26~~ 30.48	35.26	4.78
Leak Rate & Post Accident H2 Purge	305	PASS	ILRT is Testing	Type C		11/3/05	308	308	0
Leak Rate & Post Accident H2 Purge	306	PASS	ILRT is Testing	Type C		11/4/05	56.47	56.47	0

* LRV-50/36 penalty = 65.38
LRV-89/90 ILRT is Testing

ATTACHMENT 9
CONTAINMENT PENETRATION SUMMARY

SYSTEM	PEN#	PEN. DESCRIPTION	TEST STATUS	APP. J PRGM STATUS	Penalty Addn.? (if yes = value)	LAST TEST DATENote1	As-Left MPL	As-Found MPL	Leakage Savings
Containment Purge	113	RB Purge Supply	ILRT is Testing	Type C		11/28/05	3320	363.5	Ø
Containment Purge	357	RB Purge Exhaust	ILRT is Testing	Type C		12/3/05	5280	2150	Ø
Industrial Cooler	206	RBICW Supply	Take Penalty	Type C	79	3/9/05	79	92.7	13.7
Industrial Cooler	207	RBICW Return	Take Penalty	Type C	1952	10/3/03	1952	99999	98047
Industrial Cooler	366	RBICW Supply	Take Penalty	Type C	23.6	9/17/03	23.6	23.6	0
Industrial Cooler	367	RBICW Return	Take Penalty	Type C	3.69	9/17/03	3.69	3.69	0
Fire Service	430	FSW to CNTMNT	~~ILRT is Testing~~ ST(01/02) Take Penalty	Type C	541	11/7/05	541	541	0
RB Airlock	433	RB Personnel Airlock	Outer Door OPEN	Type B		8/25/05	789	789	0
RB Airlock	222	RB Equipment Hatch Airlock	Outer Door OPEN	Type B		10/26/05 4/7/04	5.5 1476	5.5 1476	0 0

Initials

1.0 CONTAINMENT VISUAL INSPECTION

1.1 10CFR 50, Appendix J and Regulatory Guide 1.163 require a visual inspection of accessible areas of the internal and external surfaces of the Reactor Containment building. This inspection requirement may be met in part or its entirety by completing PM-156, Visual Inspection of Plant Structures, NDEP-0620, VT-1 and VT-3 Visual Examination of ASME Section XI, Subsection IWE Components of Nuclear Power Plants, or by walking down the containment per the instructions in this Attachment. N/A any section below met by accepting a completed PM-156 or NDEP-0620 inspection result.

2.0 EXTERIOR INSPECTION

2.1 INSPECT all pipe and electrical penetration areas, Airlocks (outside), and all other accessible exterior surfaces for the following that might cause loss of Containment's function:

- cracks
- distortions
- loss of material
- any other unusual conditions

RLC

2.2 Using the following tables, RECORD the results of the inspection, making note of all abnormal findings, deteriorations, and WO #'s for corrective action:

ALL PIPE AND ELECTRICAL PENETRATION AREAS	
ABNORMALITIES	**WRT #**
1. NO ABNORMALITIES NOTED	
2.	
3.	
4.	
5.	
6.	

RLC 1/11/18/05
Initials / Date

EXTERIOR INSPECTION (continued) **Initials**

AIRLOCKS, EQUIPMENT HATCH (OUTSIDE)	
ABNORMALITIES	**WO #**
1. NO ABNORMALITIES NOTED	
2.	
3.	
4.	
5.	
6.	

RLC 1/11/18/05
Initials / Date

ALL OTHER ACCESSIBLE EXTERIOR SURFACES	
ABNORMALITIES	**WO #**
1. NO ABNORMALITIES NOTED	
2.	
3.	
4.	
5.	
6.	

RLC 1/11/18/05
Initials / Date

Initials

3.0 INTERIOR INSPECTION

3.1 INSPECT all pipe and electrical penetration areas, 80' and 95' Airlocks (inside), all other accessible interior surfaces, liner insulation, and Reactor Sump Pit area for the following that might cause loss of Containment's function:

- cracks
- distortions
- loss of material
- any other unusual conditions

3.2 Using the following tables, RECORD the results of this inspection, making note of all abnormal findings, deteriorations, and WO #'s for corrective action:

ALL PIPE AND ELECTRICAL PENETRATION AREAS	
ABNORMALITIES	**WO #**
1. Pen-426 Corrosion (NCR 176079)	783123
2.	
3.	
4.	
5.	
6.	

Timothy J. Balch
TB
11-18-05

INTERIOR INSPECTION (continued) **Initials**

PERSONNEL & EQUIPMENT HATCH AIRLOCKS (INSIDE)	
ABNORMALITIES	**WO #**
1. NO ABNORMALITIES	702983-16
2.	
3.	
4.	
5.	
6.	

Timothy J. Balch TB 11-18-05

ALL OTHER ACCESSIBLE INTERIOR SURFACES	
ABNORMALITIES	**WO #**
1. NO ABNORMALITIES	702983-16
2.	
3.	
4.	
5.	
6.	

Timothy J. Balch TB 11-18-05

INTERIOR INSPECTION (continued) **Initials**

INSPECT THE LINER INSULATION	
ABNORMALITIES	**WO #**
1. NO ABNORMALITIES	702983-16
2.	
3.	
4.	
5.	
6.	

Timothy J. Bauch
TB 11-18-05

CAUTION

Radiation Protection SHALL be informed prior to inspecting the Reactor Sump.

REACTOR SUMP PIT AREA	
ABNORMALITIES	**WO #**
1. Sump modification in Progress. (RE: IDDEAL SHEET) NO INSERVICE ABNORMALITIES noted.	
2.	
3.	
4.	
5.	
6.	

B. Komara 11/10/05
B. Komara

COMMENTS:

EXTERIOR PENETRATION # 348 AND 436 INEXCESSABLE DUE TO PHYSICAL BARRIERS AND HP ALARA CONCERNS.

TEST PERFORMERS:

Print Name:	Initials:	Signature/Date:
DAVID HANCOCK		
LANCE GOREL		
Richard L Collins	BLC	
Timothy J. Bacon	TJB	
Bernard P. Komara	BPK	B.P. Komara

Reactor Building Penetration Locator

Quadrant I

Item	Penetration number	Azimuth	Elevation	System(s)
1	101	35°	139' 7"	BLC 11/15/05
2	102	40°	139' 7"	BLC 11/15/05
3	103	44.48°	139' 7"	BLC 11/15/05
4	104	35°	136' 4"	BLC 11/15/05
5	105	38°	123' 0"	BLC 11/15/05
6	106	40.30°	123' 0"	BLC 11/15/05
7	107	89°	123' 0"	BLC 11/15/05
8	108	80°	123' 0"	BLC 11/15/05
9	109	40°	106' 0"	BLC 11/15/05
10	110	20°	139' 0"	BLC 11/15/05
11	111	30°	136' 0"	BLC 11/15/05
12	112	32.30°	136' 0"	BLC 11/15/05
13	113	75°	139' 0"	BLC 11/15/05
14	115	42.30°	106' 0"	BLC 11/15/05
15	116	17.30°	139' 0"	BLC 11/15/05
16	117	40°	112' 0"	BLC 11/15/05
17	118	42.30°	112' 0"	BLC 11/15/05
18	119	29.55°	106' 0"	BLC 11/15/05
19	120	32.35°	106' 0"	BLC 11/15/05
20	121	30°	133' 0"	BLC 11/15/05
21	122	32.30°	133' 0"	BLC 11/15/05
22	123	29.55°	112' 0"	BLC 11/15/05
23	124	32.35°	112' 0"	BLC 11/15/05
24	125	75°	123' 0"	BLC 11/15/05
25	126	40°	136'4"	BLC 11/15/05
26	127	46.35°	136' 0"	BLC 11/15/05
27	128	35°	133' 1"	BLC 11/15/05
28	129	40°	133'1"	BLC 11/15/05
29	130	46.35°	133' 1"	BLC 11/15/05
30	131	35°	129' 10"	BLC 11/15/05
31	132	40°	129' 10"	BLC 11/15/05
32	133	46.35°	129' 10"	BLC 11/15/05
33	134	85°	135' 0"	BLC 11/15/05
34	135	85°	132' 0"	BLC 11/15/05
35	136	85°	128' 3"	BLC 11/15/05

ALL Penetration are Acceptable per procedure SR-178 REV. 29 [signature] 11/15/05

95' REACTOR
BUILDING

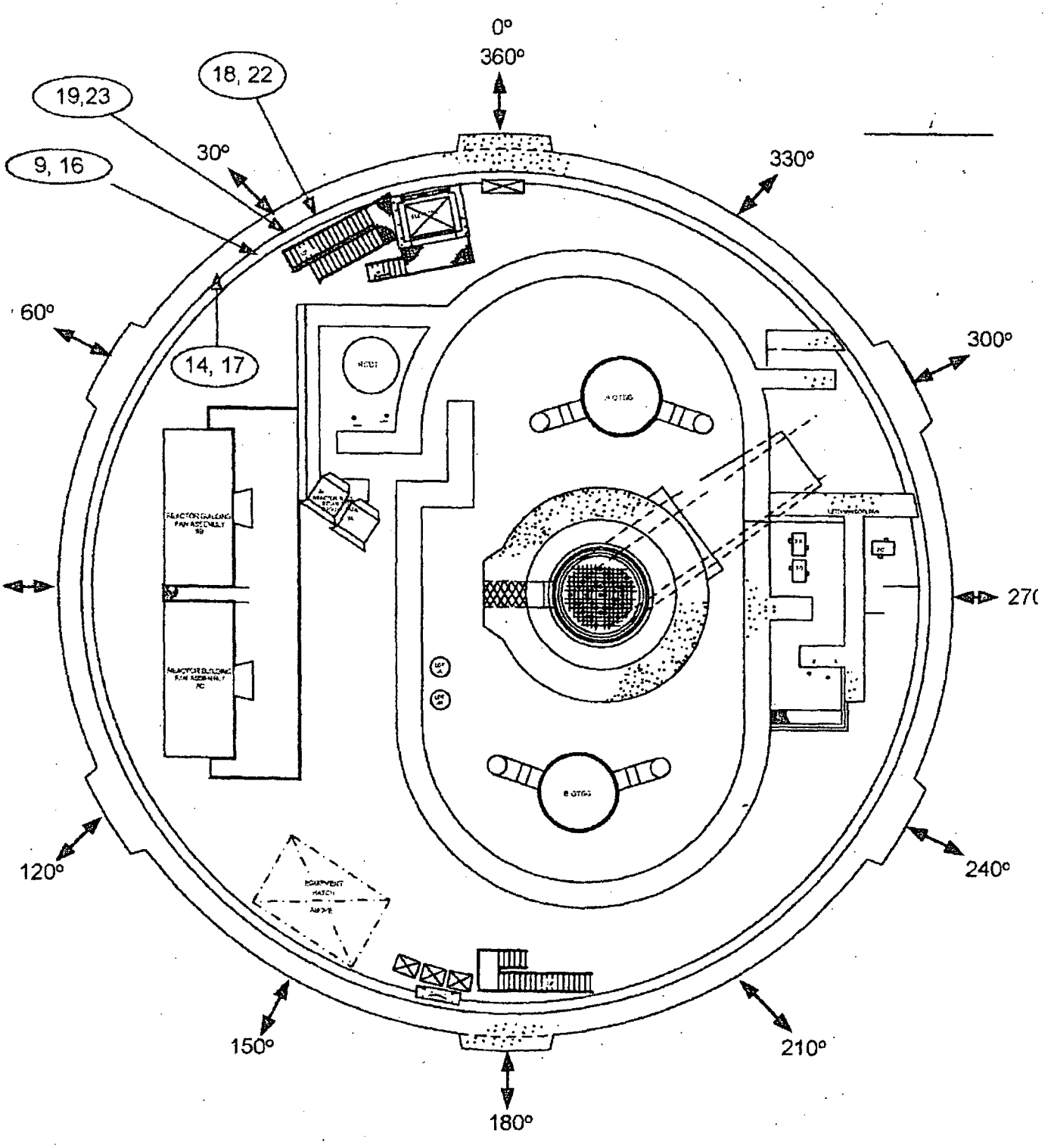

AZIMUTHS

95' Intermediate Building

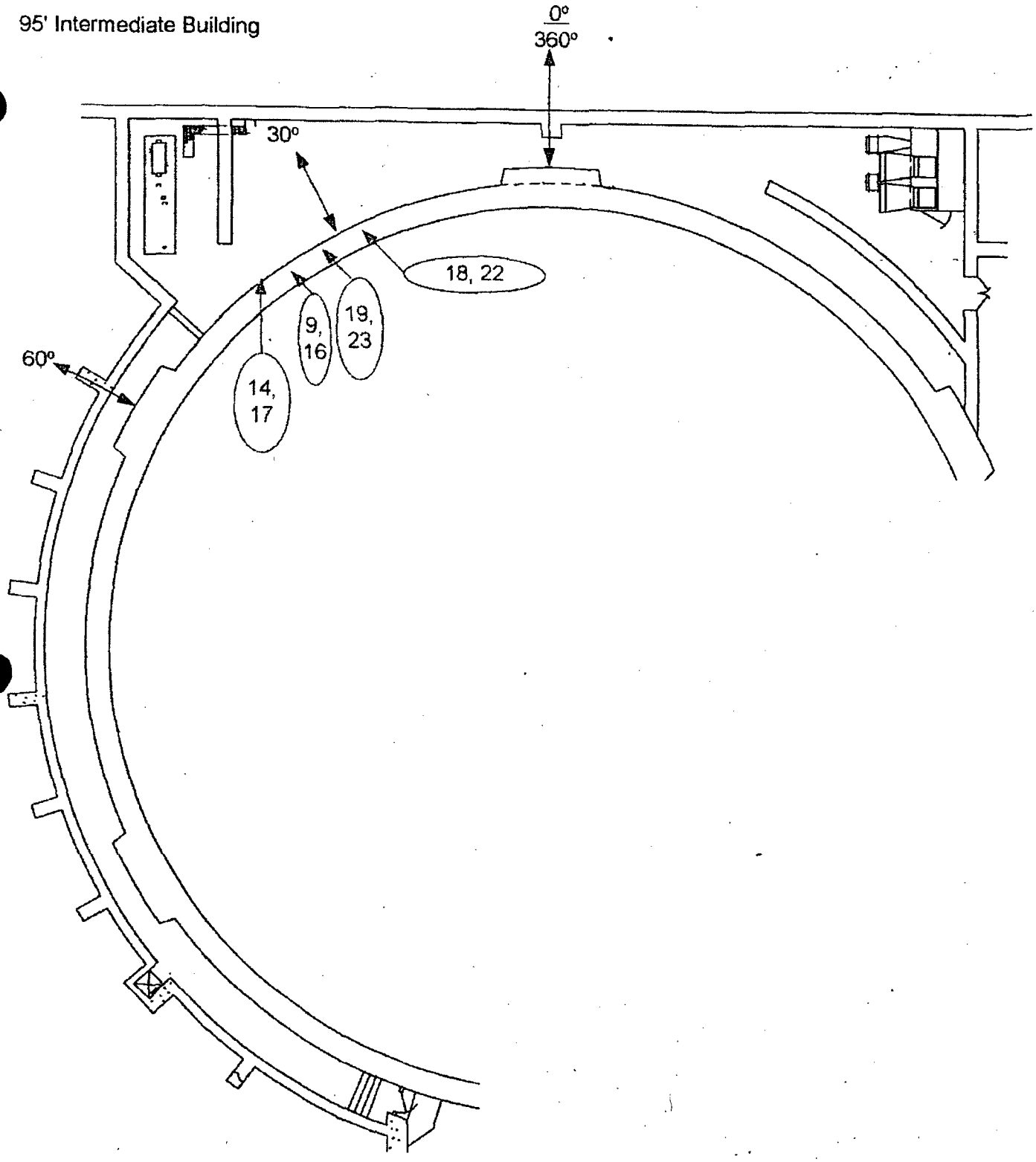

Florida Power
A Progress Energy Company

119' REACTOR BUILDING

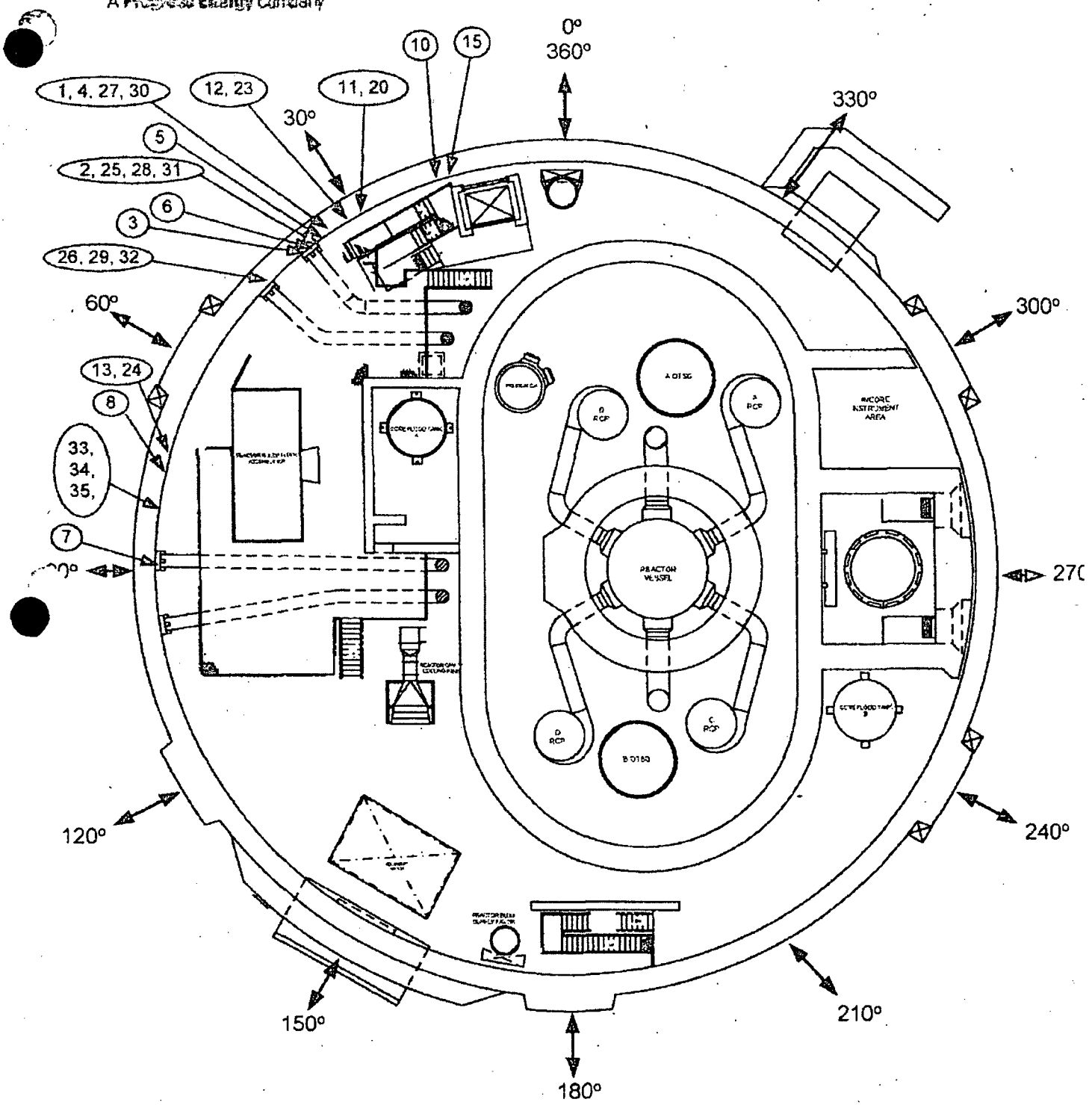

AZIMUTHS

119' INTERMEDIATE
BUILDING

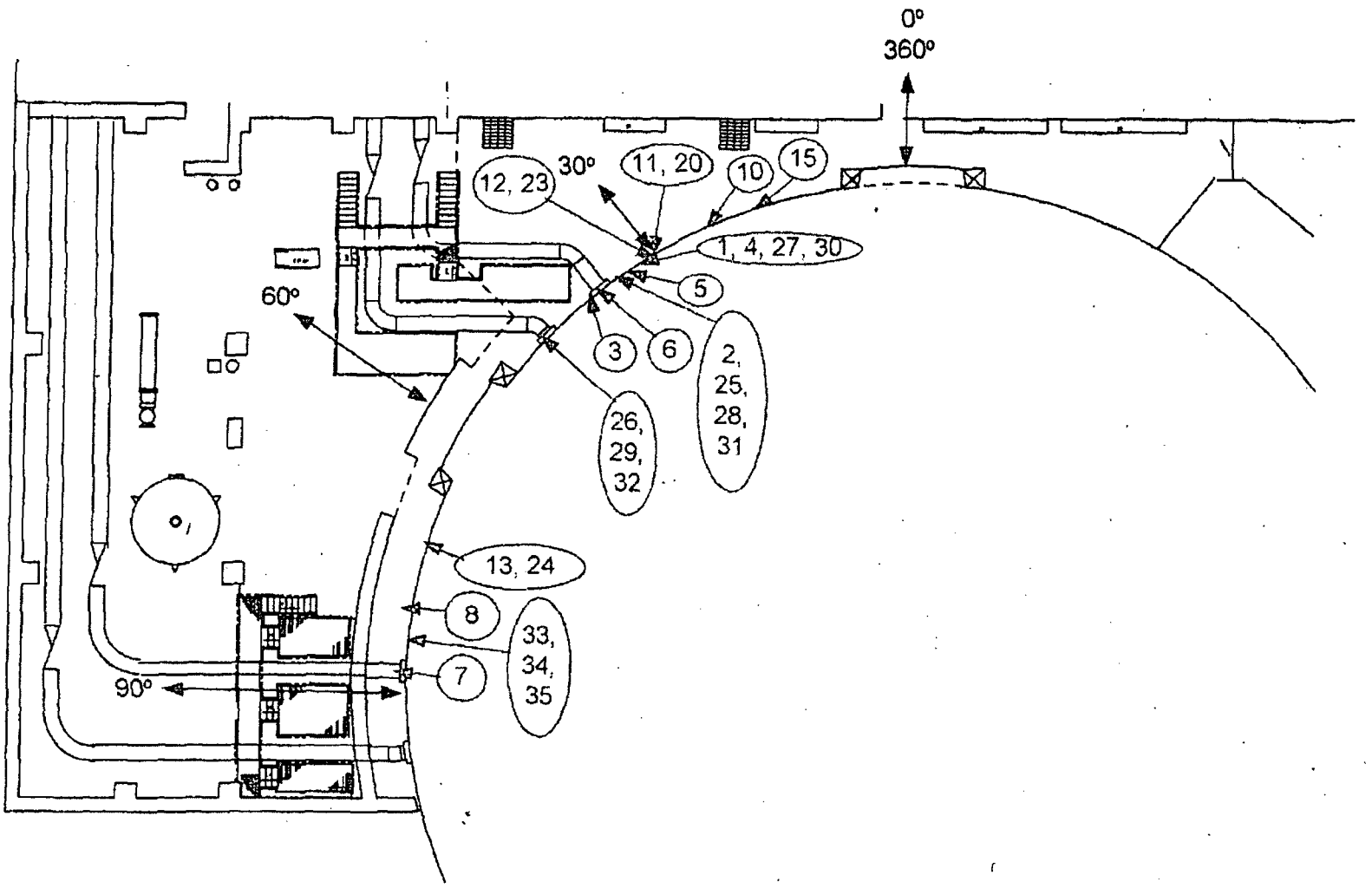

Reactor Building Penetration Locator

Quadrant II

Item	Penetration number	Azimuth	Elevation	System(s)
36	201	97.30°	123' 0"	RLC 11/14/05
37	202	100°	135' 0"	RLC 11/14/05
38	203	97.30°	135' 0"	RLC 11/14/05
39	204	97.30°	132' 0"	RLC 11/14/05
40	205	97.30°	129' 0"	RLC 11/14/05
41	206	165°	104' 0"	RLC 11/14/05
42	207	167.30°	104' 0"	RLC 11/14/05
43	208	90°	141' 9"	RLC 11/15/05
44	209	92.30°	141' 9"	RLC 11/15/05
45	210	95°	141' 9"	RLC 11/15/05
46	211	97.30°	141' 9"	RLC 11/14/05
47	212	90°	135' 0"	RLC 11/14/05
48	213	95°	135' 0"	RLC 11/14/05
49	214	90°	132' 0"	RLC 11/14/05
50	215	95°	132' 0"	RLC 11/14/05
51	216	90°	128' 9"	RLC 11/15/05
52	217	95°	128' 9"	RLC 11/15/05
53	222	150°	132' 0"	Equip Hatch

RLC 11/14/05

All Penetration Are Acceptable per procedure SP-178 REV-29 [signature] 11/14/05

95' REACTOR
BUILDING

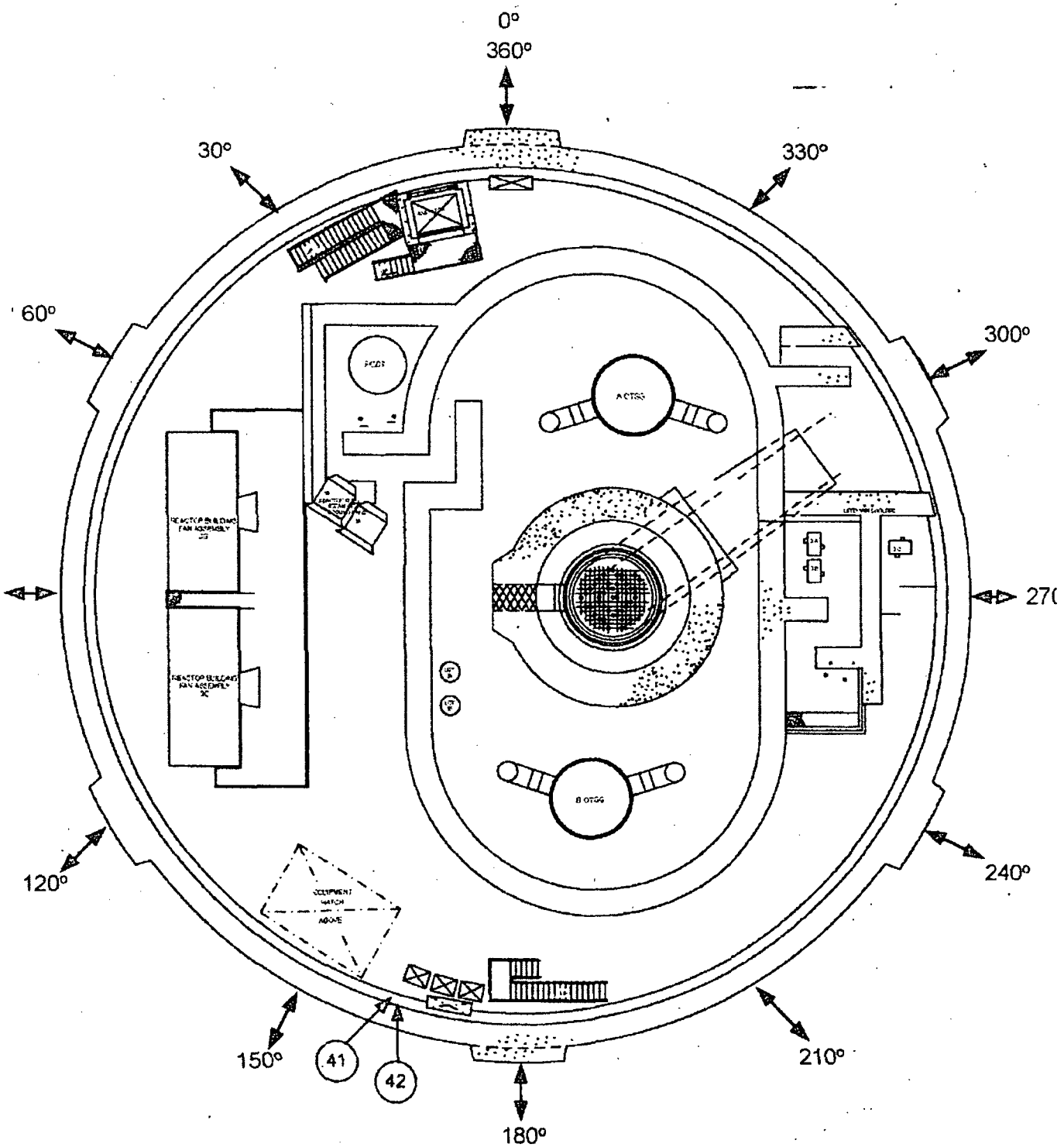

AZIMUTHS

Florida Power
A Progress Energy Company

119' REACTOR
BUILDING

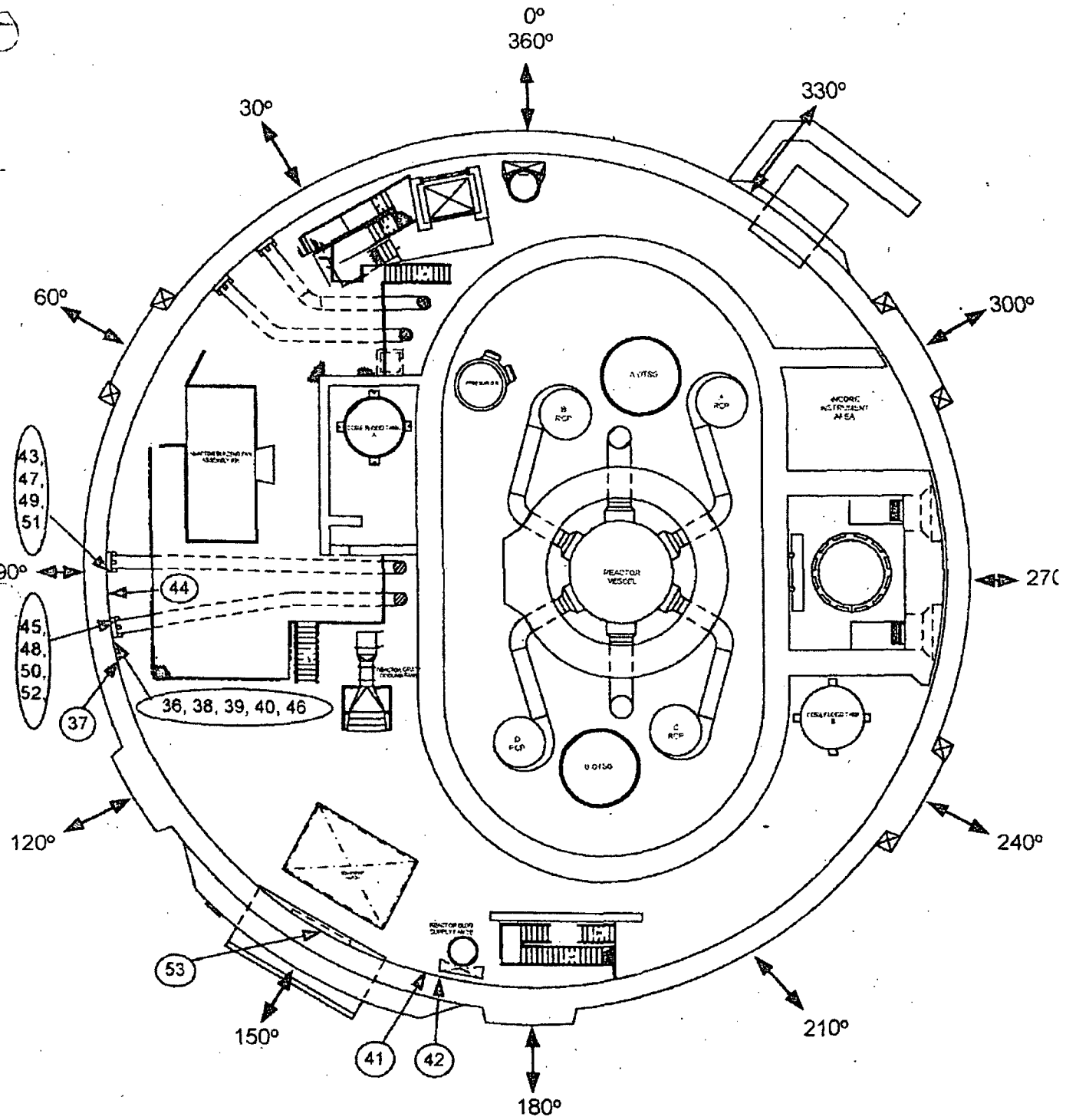

AZIMUTHS

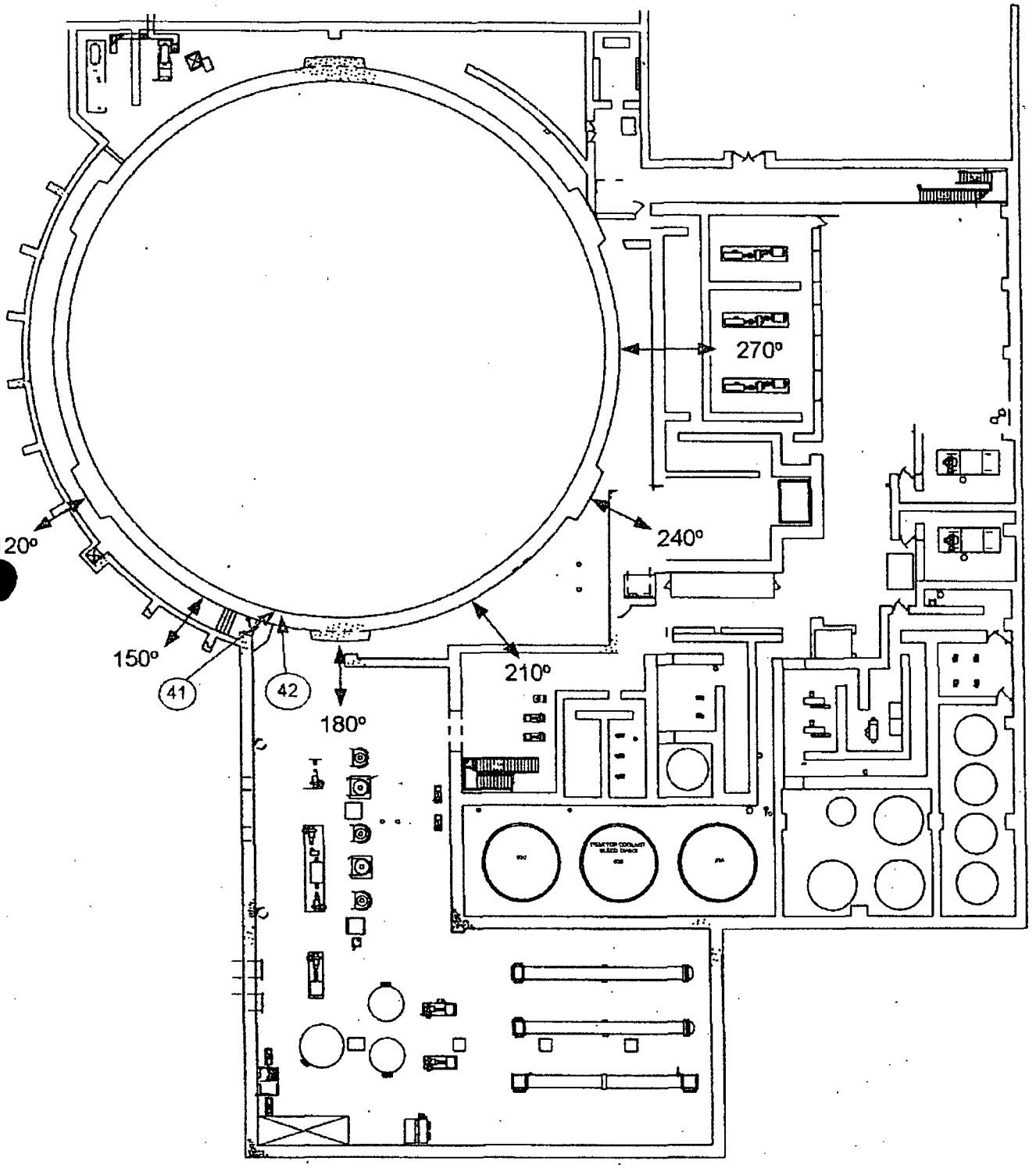
270°
240°
120°
150°
41
42
180°
210°

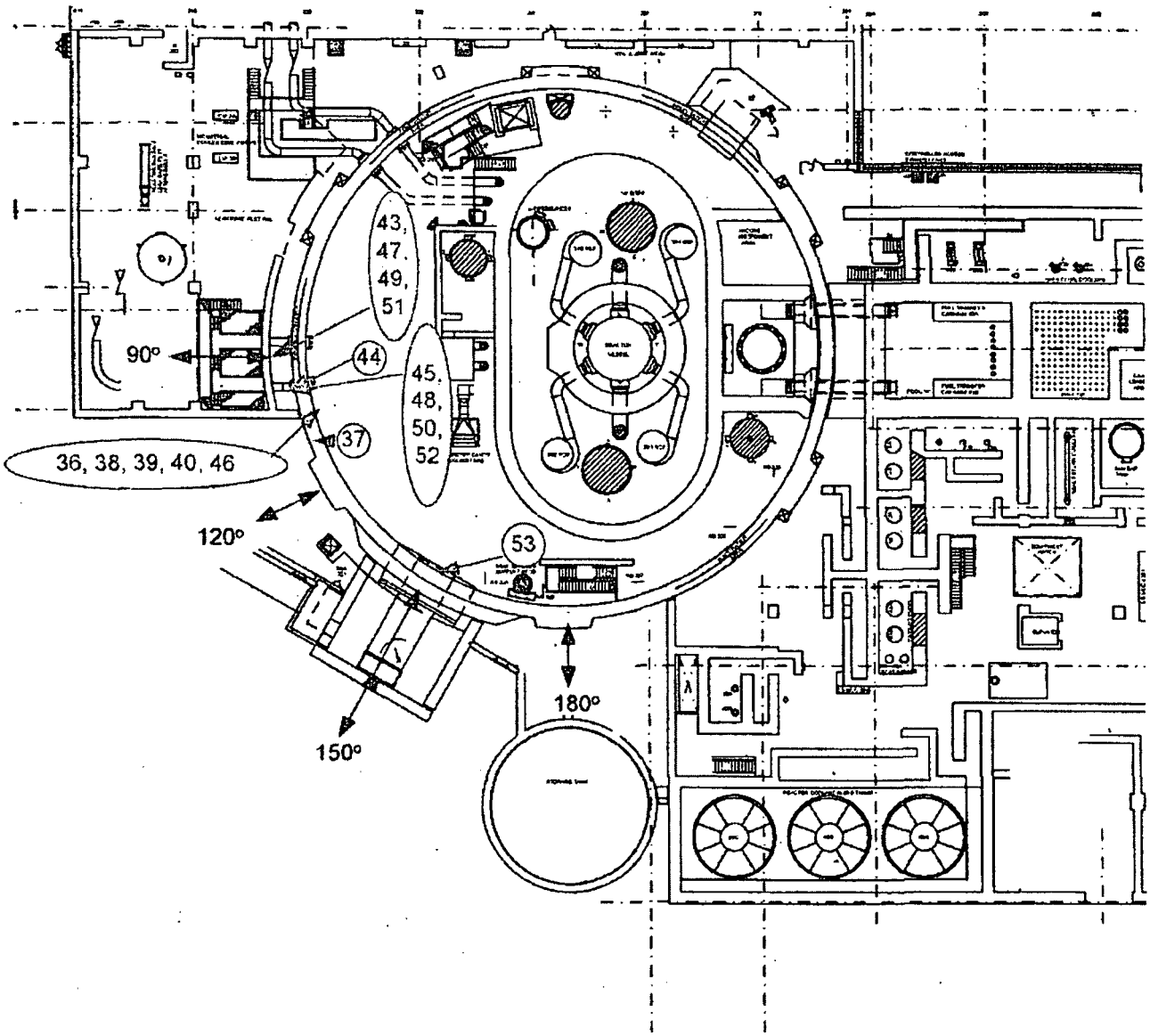
43, 47, 49, 51
44
45, 48, 50, 52
37
36, 38, 39, 40, 46
90°
120°
53
180°
150°

Reactor Building Penetration Locator

Quadrant III

Item	Penetration number	Azimuth	Elevation	System(s)
54	301	215°	152' 7"	RLC 11/17/05
55	302	220°	152' 7"	RLC 11/17/05
56	303	225°	152' 7"	RLC 11/17/05
57	304	215°	149' 4"	RLC 11/17/05
58	305	220°	149' 4"	RLC 11/17/05
59	306	225°	149' 4"	RLC 11/17/05
60	307	215°	146' 1"	RLC 11/17/05
61	308	220°	146' 1"	RLC 11/17/05
62	309	225°	146' 1"	RLC 11/17/05
63	314	217.30°	106' 0"	11/17/05
64	315	215°	136' 0"	RLC 11/17/05
65	316	225°	136' 1"	RLC 11/17/05
66	317	215°	146' 1"	RLC 11/17/05
67	318	212.30°	106' 0"	11/17/05
68	319	194°	112' 0"	11/17/05
69	320	227.30°	136' 0"	RLC 11/17/05
70	321	207.38°	106' 0"	11/17/05
71	322	202.30°	106' 0"	11/17/05
72	323	212.30°	133' 0"	RLC 11/17/05
73	324	212.30°	130' 0"	RLC 11/17/05
74	325	210°	133' 0"	RLC 11/17/05
75	326	210°	130' 0"	RLC 11/17/05
76	327	192.80°	109' 0"	11/17/05
77	328	192.80°	112' 0"	11/17/05
78	329	217.30°	133' 0"	RLC 11/17/05
79	330	210°	136' 0"	RLC 11/17/05
80	331	212.30°	136' 0"	RLC 11/17/05
81	332	220°	127' 0"	RLC 11/17/05
82	333	267.30°	108' 0"	11/17/05
83	334	220°	130' 0"	RLC 11/17/05
84	336	265°	108' 0"	11/17/05
85	337	262.30°	108' 0"	11/17/05
86	338	217.30°	130' 0"	RLC 11/17/05
87	339	225°	112' 0"	11/17/05
88	340	225°	106' 0"	11/17/05
89	341	210°	106' 0"	11/17/05
90	342	205°	106' 0"	11/17/05
91	343	220°	106' 0"	11/17/05
92	347	225°	130' 0"	RLC 11/17/05
93	348	262.30°	125' 7"	SF transfer tube

INACCESSABLE AS PER H.P.

ALL PENETRATION ARE ACCEPTABLE PER PROCEDURE SP-178 REV-29 11/17/05

Reactor Building Penetration Locator

Quadrant III

94	349	227.30°	112' 0"	11/17/05
95	350	225°	127' 0"	RLC 11/17/05
96	351	215°	127' 0"	RLC 11/17/05
97	352	217.30°	127' 0"	RLC 11/17/05
98	353	215°	112' 0"	11/17/05
99	354	215°	133' 0"	RLC 11/17/05
100	355	212.30°	127' 0"	RLC 11/17/05
101	356	205°	127' 0"	RLC 11/17/05
102	357	207.38°	153' 6"	RLC 11/17/05
103	358	194°	106' 0"	11/17/05
104	359	200°	106' 0"	11/17/05
105	360	212.30°	112' 0"	11/17/05
106	361	210°	112' 0"	11/17/05
107	362	207.38°	133' 0"	RLC 11/17/05
108	363	207.38°	130' 0"	RLC 11/17/05
109	364	205°	133' 0"	RLC 11/17/05
110	365	205°	130' 6"	RLC 11/17/05
111	366	192.80°	106' 0"	11/17/05
112	367	195°	109' 0"	11/17/05
113	368	197.23°	109' 0"	11/17/05
114	369	197.23°	112' 0"	11/17/05
115	370	197.23°	106' 0"	11/17/05
116	371	200°	112' 0"	11/17/05
117	372	225°	133' 0"	RLC 11/17/05
118	373	210°	127' 0"	RLC 11/17/05
119	374	227.30°	106' 0"	11/17/05
120	376	217.30°	112' 0"	11/17/05
121	377	220°	136' 0"	RLC 11/17/05
122	375	205°	153' 6"	RLC 11/17/05
123	344	215°	105' 0"	11/17/05

ALL PENETRATION ARE ACCEPTABLE PER PROCEDURE SP-178 REV-29 11/18/05

95' REACTOR
BUILDING

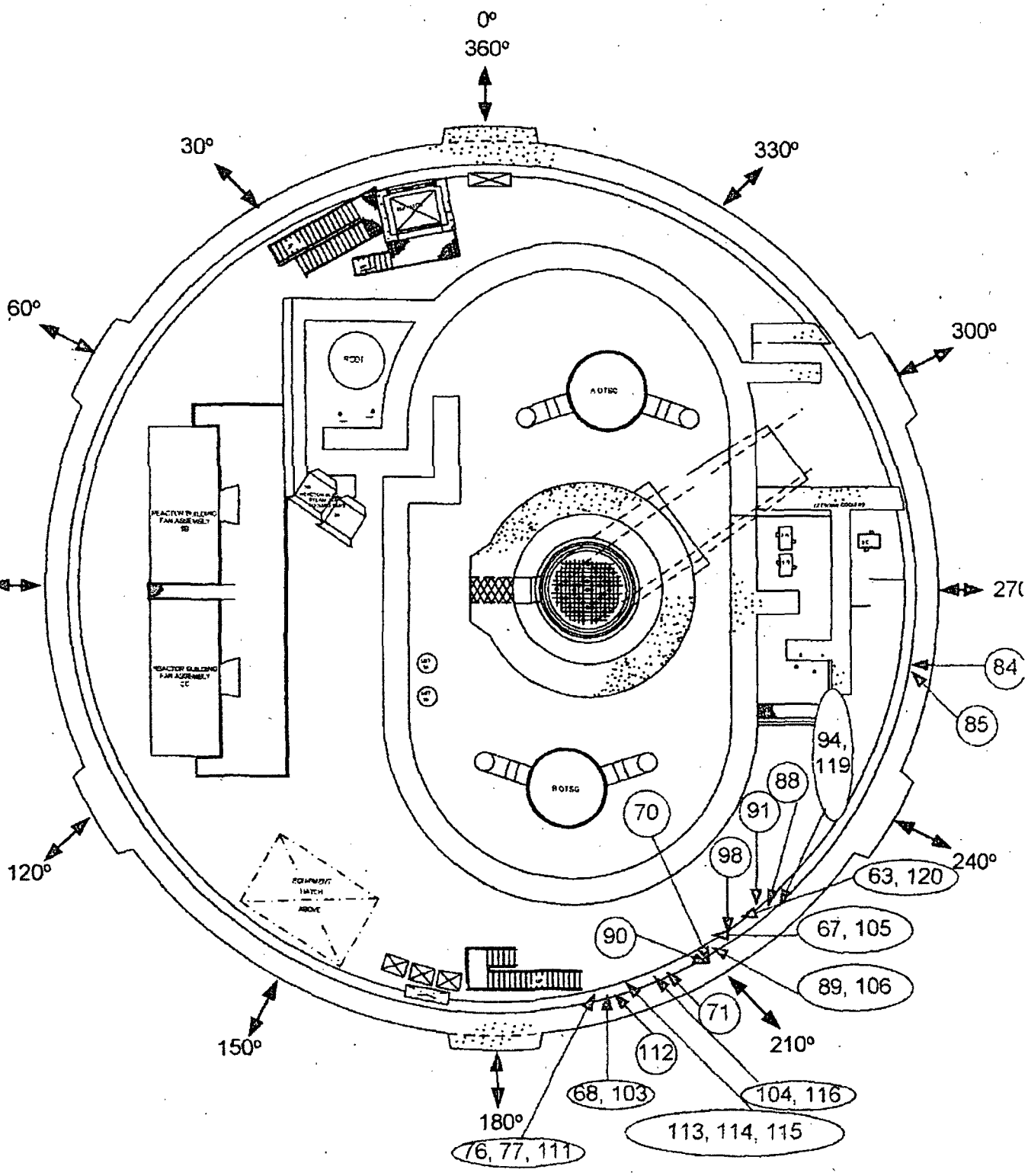

AZIMUTHS

Florida Power
A Progress Energy Company

119' REACTOR BUILDING

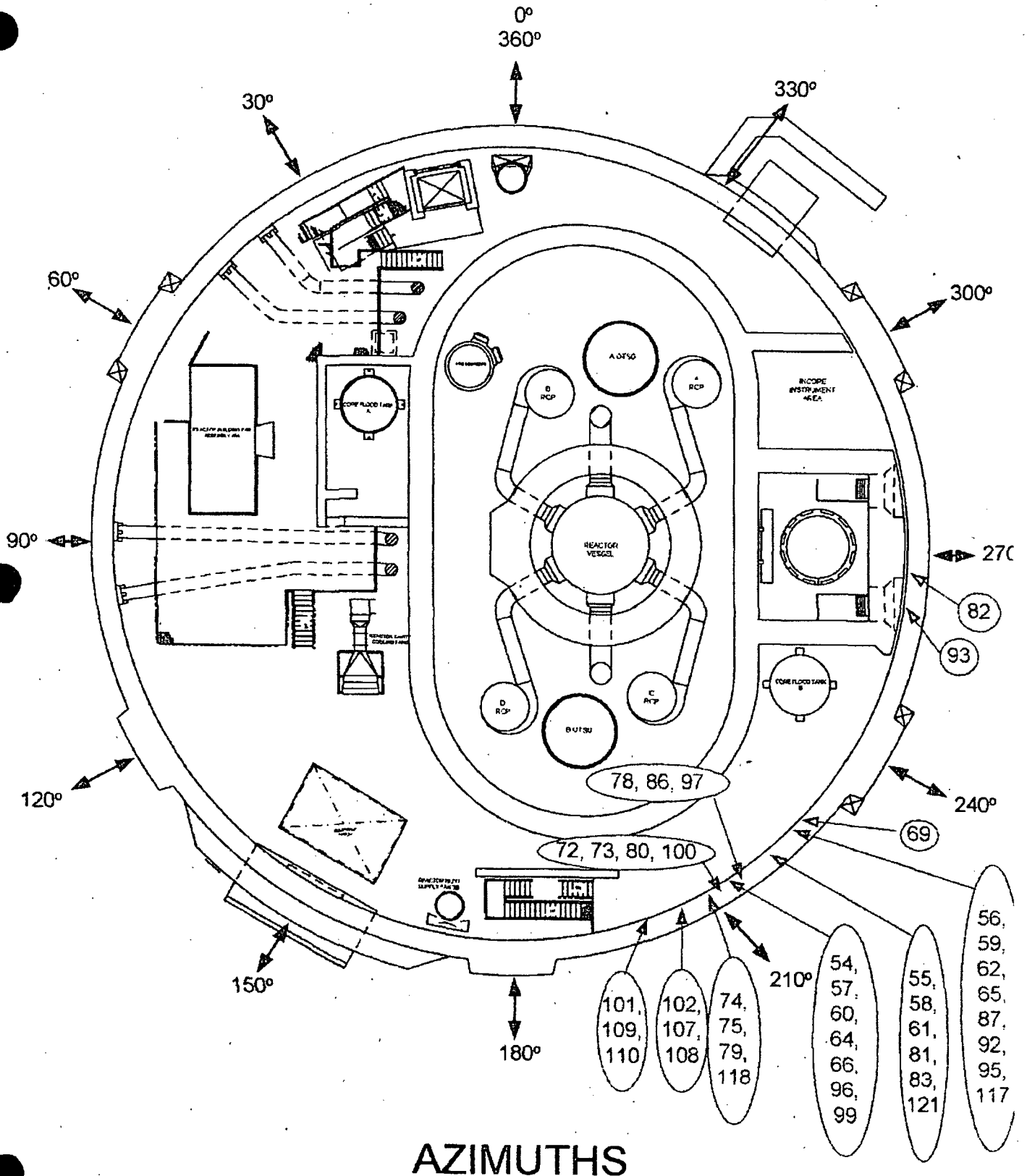

AZIMUTHS

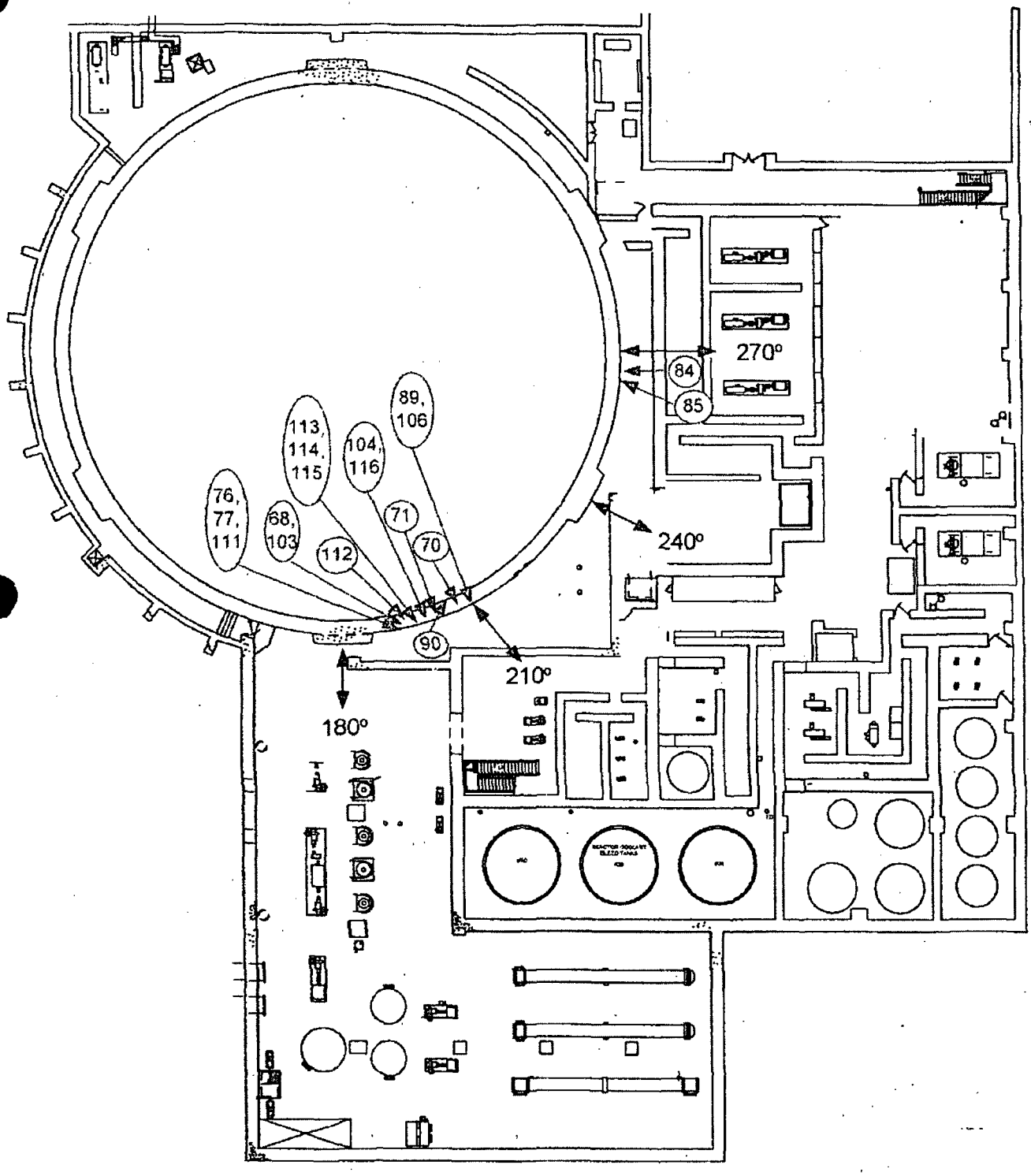
270°
84
85
89,
106
113,
114,
115
104,
116
76,
77,
111
68,
103
112
71
70
240°
90
210°
180°

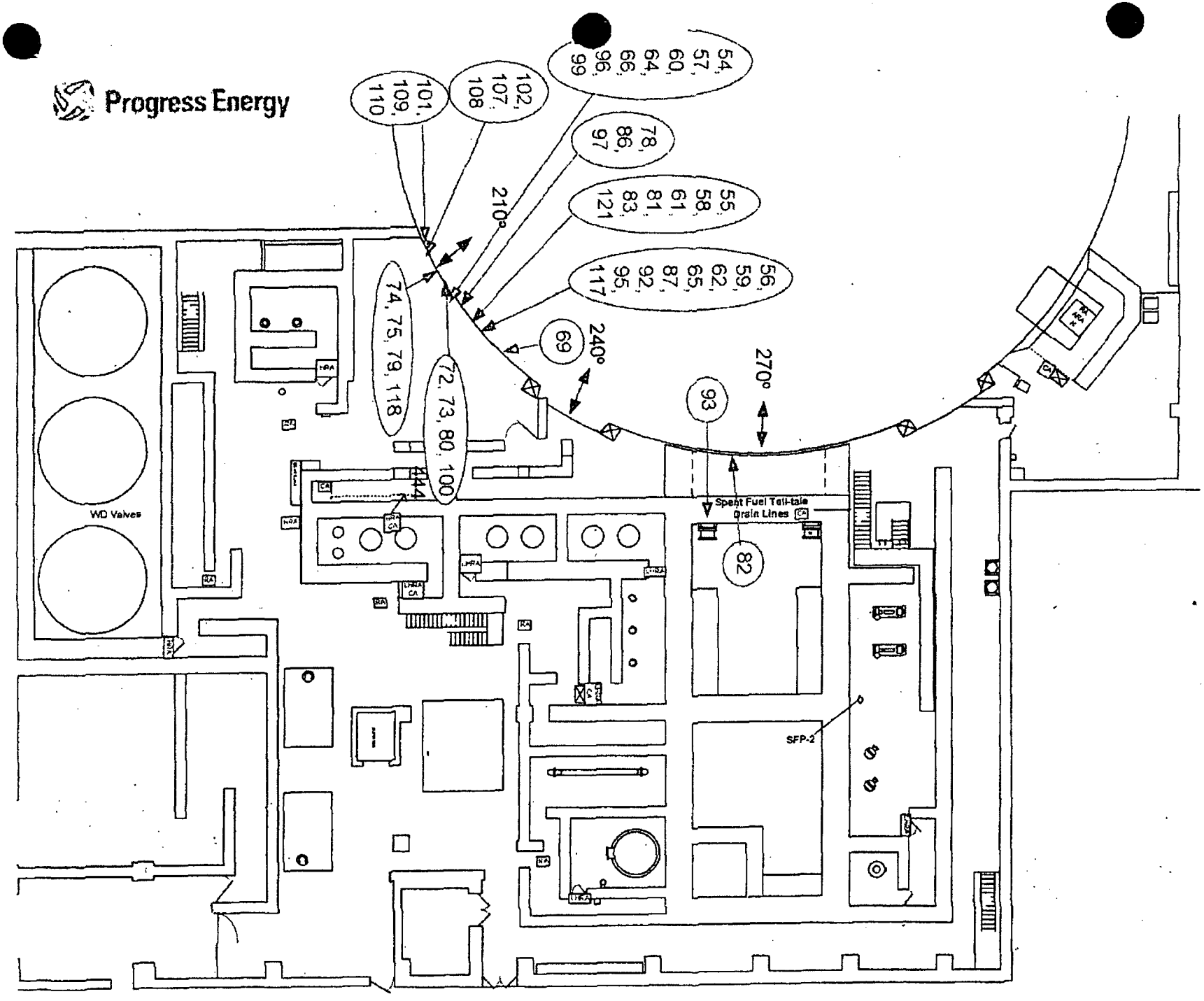
Progress Energy
54, 57, 60, 64, 66, 96, 99
102, 107, 108
101, 109, 110
78, 86, 97
55, 58, 61, 81, 83, 121
56, 59, 62, 65, 87, 92, 95, 117
74, 75, 79, 118
72, 73, 80, 100
69
93
82
210°
240°
270°
WD Valves
Spent Fuel Tell-tale Drain Lines
SFP-2

Reactor Building Penetration Locator

Quadrant IV

Item	Penetration number	Azimuth	Elevation	System(s)
122	401	342.30°	140' 8"	RLC 11/18/05
123	402	337.30°	140' 8"	RLC 11/18/05
124	403	335°	140' 8"	RLC 11/18/05
125	404	332.30°	140' 8"	RLC 11/18/05
126	405	327.30°	140' 8"	RLC 11/18/05
127	406	322.30°	140' 8"	RLC 11/18/05
128	407	317.30°	140' 8"	RLC 11/18/05
129	408	313.15°	140' 8"	RLC 11/18/05
130	409	313.15°	137' 5"	RLC 11/18/05
131	410	317.30°	137' 5"	RLC 11/18/05
132	411	322.30°	137' 5"	RLC 11/18/05
133	412	327.30°	137' 5"	RLC 11/18/05
134	413	330°	108' 2"	RLC 11/18/05
135	414	335°	108' 2"	RLC 11/18/05
136	415	330°	104' 11"	RLC 11/18/05
137	416	335°	104' 11"	RLC 11/18/05
138	423	342.30°	131' 0"	RLC 11/18/05
139	424	342.30°	109' 2"	RLC 11/18/05
140	425	345°	104' 11"	RLC 11/18/05
141	426	342.30°	104' 11"	RLC 11/18/05
142	427	340°	108' 2"	RLC 11/18/05
143	428	337.30°	131' 0"	RLC 11/18/05
144	429	317.30°	108' 2"	RLC 11/18/05
145	430	347.30°	108' 2"	RLC 11/18/05
146	433	323°	122' 7"	Personnel Hatch RLC 11/18/05
147	434	275°	108' 0"	RLC 11/18/05
148	435	272.30°	108' 0"	RLC 11/18/05
149	436	280°	125' 7"	SF Transfer tube NO ACCESS AND
150	439	322.30°	108' 2"	RLC 11/18/05
151	440	322.30°	104' 11"	RLC 11/18/
152	441	317.30°	104' 11"	RLC 11/18/05
153	442	345°	108' 2"	RLC 11/18/05

ALL PENETRATION ARE ACCEPTABLE PER PROCEDURE SP-178 REV.29 [signature] 11/18/05

95' REACTOR
BUILDING

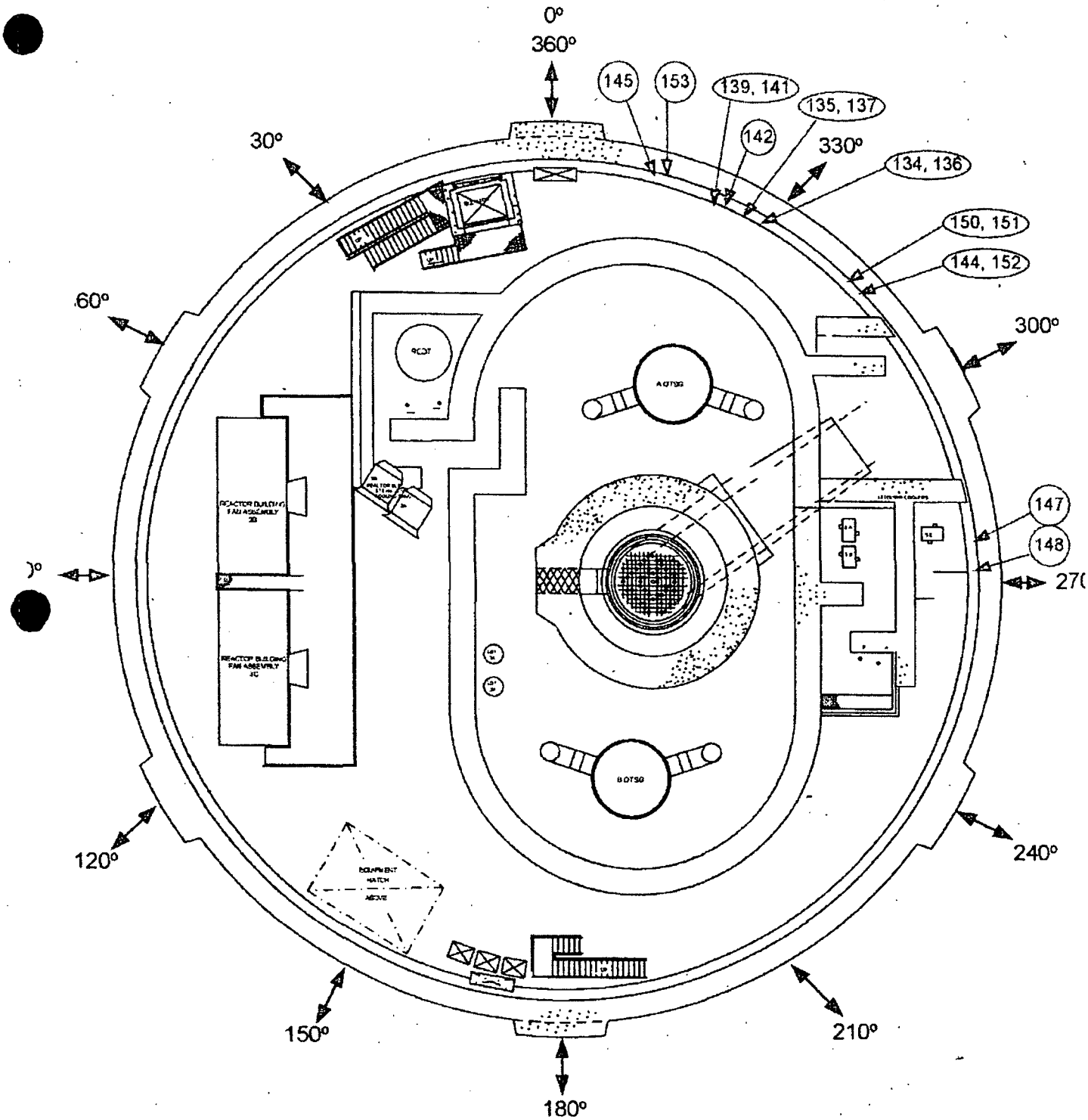

AZIMUTHS

Florida Power
A Progress Energy Company

119' REACTOR BUILDING

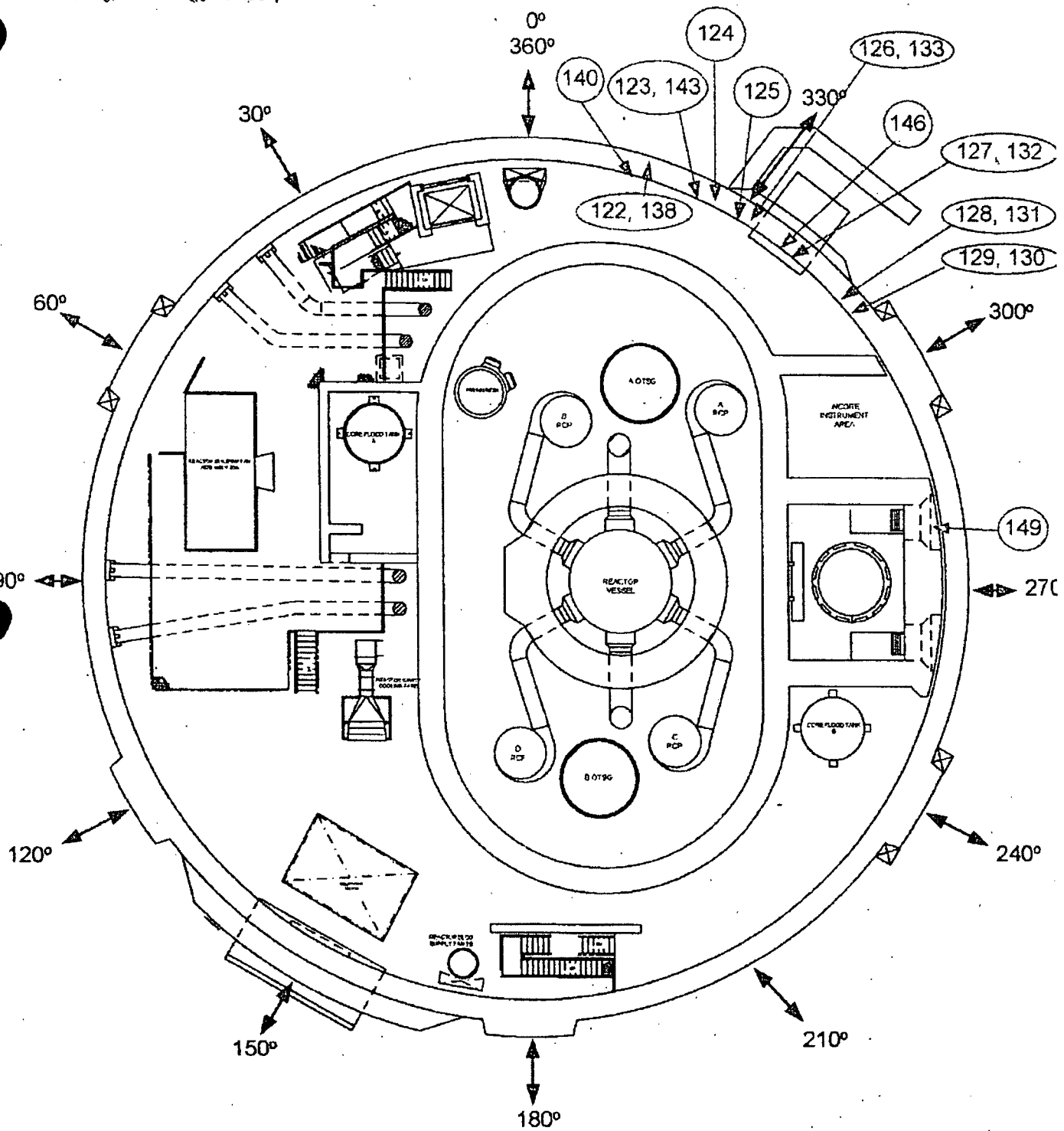

AZIMUTHS

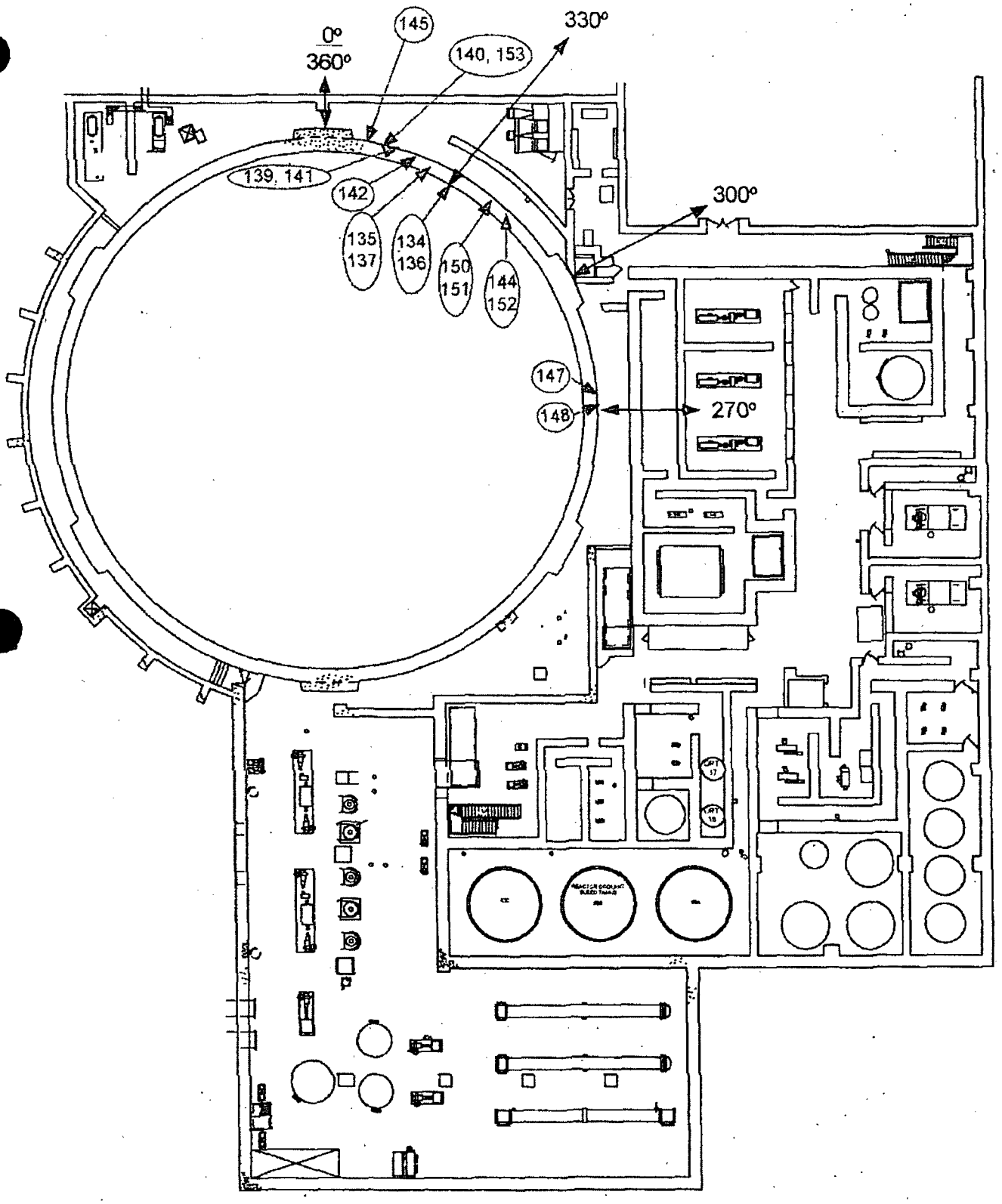
0°
360°
145
140, 153
330°
139, 141
142
135
137
134
136
150
151
144
152
300°
147
148
270°

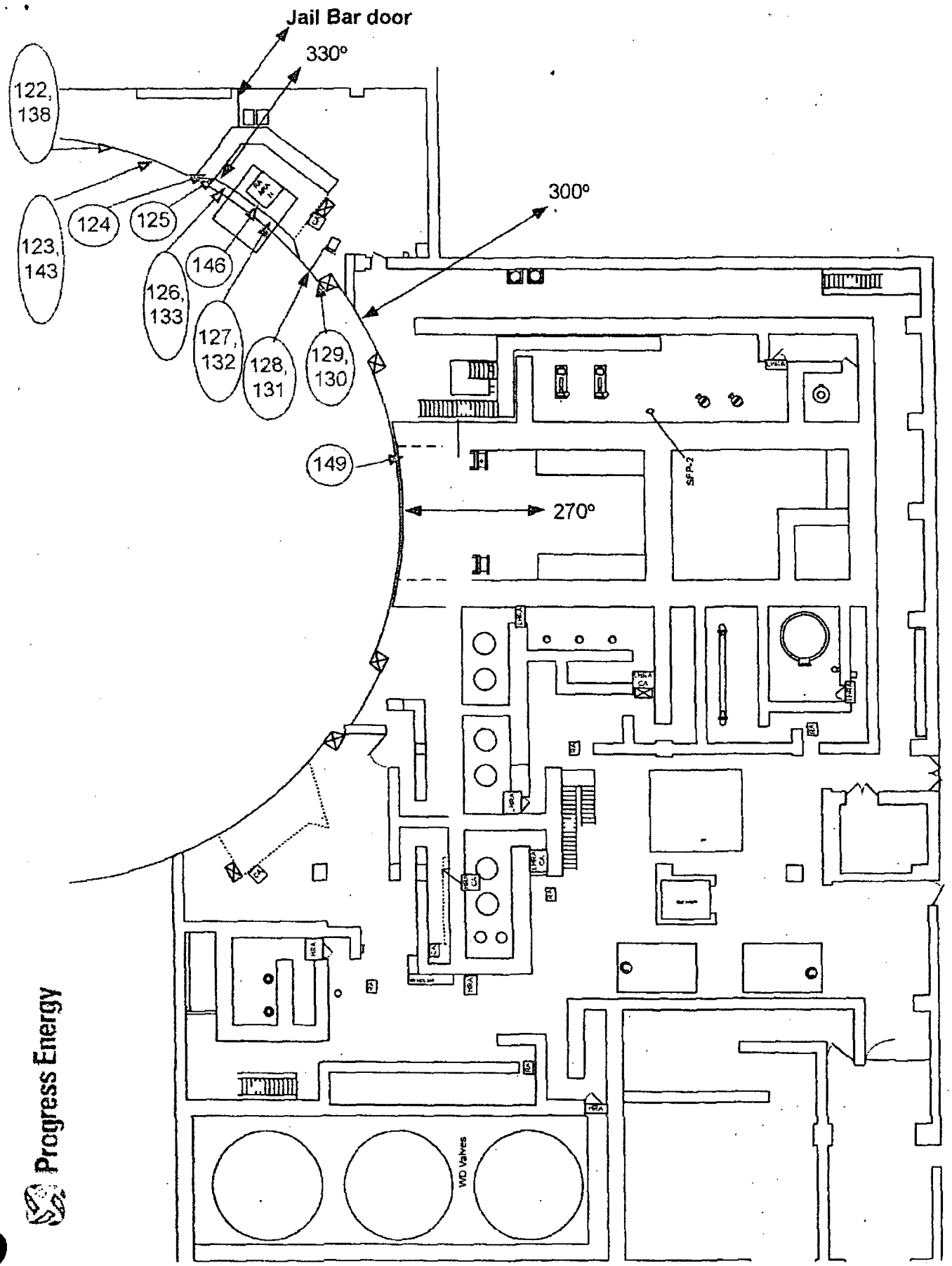

Progress Energy

ATTACHMENT 11
CONTINGENCIES

1.0 TEST ABORT

Test Phase	Safe Condition	Abort Plans
Preparation	Stop in progress alignments.	Place components in a safe condition as directed by CRS, SSO, Test Supervisor. Document all manipulations on Attachment 8.
Pressurization	• Close pressurization valve(s). • Unload and stop compressors.	From SAFE condition: • Proceed to Section 0, Depressurization Phase. • Release plant systems under Test organization control (tags). • Depressurize plant per procedure and any specific directions from operations/management. • Unless otherwise directed, continue collecting data during depressurization
Stabilization	• Stop leak survey activities. • Assess plant activities which may be in progress (sampling, stopping sump draining, etc.). • Continue data acquisition.	Same as above
Hold Test (ILRT)	• Inherently stable, NO active manipulation of plant equipment. • Stop leak survey activities. • Continue data acquisition.	Same as above
Verification Test	• Only activity is imposition of a known leak from containment. • Continue data acquisition. • If requested, stop imposed leak flow.	Same as above
Depressurization	• Isolate depressurization path until otherwise notified. • Update Test Supervisor/Ops on current pressures/conditions in containment.	• Continue with depressurization when so directed. • Alter depressurization path as directed by SSO if required. • Monitor depressurization rate closely.

2.0 VALVE LINEUP ERRORS

2.1 NOTIFY ILRT Test Supervisor, SSO

2.2 Test Supervisor/Consultant EVALUATE impact on test.

2.3 NOTIFY SSO of course of action chosen, reposition valve if appropriate, enter actions into Attachment 1, Test Log.

2.4 IF decision is made to leave valve in other than Attachment 3 desired test position, record actions and rationale in Attachment 7, Test Exceptions. This course of action is often acceptable if current results are acceptable, and re-positioning valve would require re-starting test phase. REVIEW penetration's final status against Attachment 9 status. Modify as appropriate.

IF the proposed correction of a valve lineup error could change the leakage rate being measured, the Test Supervisor must consider impact on the current test phase, the schedule, and the final acceptability of the test results.

NOTE

REPOSITIONING A VALVE THAT COULD IMPACT MEASURED LEAKAGE RATE COULD REQUIRE RESTARTING THE TEST.

Follow the guidance in Section 3.0 for errors causing excessive leakage. RECORD any actions taken in Attachment 1, Test Log.

3.0 EXCESSIVE LEAKAGE

TEST PHASE	LEAK SCENARIO	RESPONSE
Pressurization NOTE: Pressurization does NOT have to be stopped during leakage evaluation unless Shift/Test Management so orders.	1. Containment Boundary, Locally Leak Rate Testable.	• Verify LLRT procedure tests leaking barrier in Post-Accident direction, AND that a LLRT will measure observed leakage. • IF penalty addition is already being applied for barrier, THEN take steps to isolate leakage. • IF a penalty addition was NOT planned AND leakage can be measured later with a LLRT, THEN isolate penetration. • Continue pressurization to test pressure. • Record/explain action in Attachment 1, (Test Supervisor's Log) AND Attachment 7, (Test Exceptions Log), THEN modify penetration's test status in Attachment 9, (Containment Penetration Summary).

ATTACHMENT 11
CONTINGENCIES

TEST PHASE	LEAK SCENARIO	RESPONSE
Pressurization Continued:	2. Containment Boundary, NOT Locally Leak Rate Testable.	• Evaluate whether the leak can be later measured with an Appendix J leak test. IF YES, THEN proceed as described in scenario 1 above. • IF leakage can NOT be determined later with a local leakage rate style test, THEN evaluate whether leak can be isolated at test pressure. • IF leakage can be isolated with containment at pressure, THEN continue pressurization to final test pressure AND measure leakage in Stabilization Mode. • IF leakage can NOT be isolated once containment exceeds 12 psi, THEN STOP pressurization AND evaluate options (e.g. entry to close additional valves, correct a lineup, etc.). • IF necessary, THEN notify SSO, ILRT Test Supervisor AND request permission to depressurize to < 12 psi to effect repairs. • Record/explain action in Attachment 1, (Test Supervisor's Log); AND Attachment 7, (Test Exceptions Log), THEN modify penetration's test status as reflected in Attachment 9, (Containment Penetration Summary) if appropriate.
	3. Test Boundary	• IF observed leakage is from a line or component that is a Test Boundary, NOT a containment boundary as determined by ILRT Test Supervisor (e.g. such as a flange on the pressurization line), THEN take steps to isolate or correct leakage. • Continue pressurization. • Record/explain action in Attachment 1, (Test Supervisor's Log).
	4. MSIV	• IF leakage is excessive, and it appears to be flowing through a MSIV, consider breaking vacuum in the secondary plant.

TEST PHASE	LEAK SCENARIO	RESPONSE
Stabilization NOTE: It is NOT unusual to experience what appears to be high leakage early in stabilization due to processes such as in-gassing and void equalization. It is imperative that NO action be taken until a full evaluation of a problem is complete.	4. Containment Boundary, Locally Leak Rate Testable	• Continue collecting data if leakage shows downward trend that can be projected to drop below acceptance criteria – take NO action. • IF leakage does NOT appear to be trending into an acceptable range, THEN apply scenario 1 response. • Verify containment pressure ≥ 96% Pa. • Reset Stabilization phase start time in ILRT computer (i.e. regenerate arrays from data point directly AFTER corrective action was taken).
	5. Containment Boundary, NOT Locally Leak Rate Testable	• Continue collecting data if leakage shows downward trend that can be projected to drop below acceptance criteria – take NO action. • Evaluate whether leak can be measured later with an Appendix J leak test. IF YES, THEN proceed as described in scenario 1 above. • IF leakage can NOT be determined later with a local leakage rate style test, THEN evaluate whether leak can be isolated at test pressure. • IF leakage can be isolated with containment at pressure, THEN remain in Stabilization Mode long enough to measure leakage, THEN isolate leak. • Verify containment pressure ≥ 96% Pa. • Reset array start time and quantify change once leak is isolated. • IF the leakage can NOT be isolated at test pressure, THEN quantify leakage using ILRT computer. Notify SSO, ILRT Test Management AND request permission to depressurize to < 12 psi to effect repairs. • Record/explain the action in Attachment 1, (Test Supervisor's Log) AND Attachment 7, (Test Exceptions Log). Modify penetration's test status in Attachment 9, (Containment Penetration Summary).

ATTACHMENT 11
CONTINGENCIES

TEST PHASE	LEAK SCENARIO	RESPONSE
Stabilization Continued	6. Test Boundary	• IF observed leakage is from a line or component that is a Test Boundary, NOT a containment boundary as determined by the ILRT Test Supervisor (e.g. such as a flange on the pressurization line), THEN take steps to isolate or correct leakage. • Verify containment pressure ≥ 96% Pa. • Restart data collection in Stabilization mode, continue test. • Record/explain action in Attachment 1, (Test Supervisor's Log).
Hold Test (ILRT)	7. Containment Boundary, Locally Leak Rate Testable	• Continue collecting data if leakage shows a downward trend that can be projected to drop below acceptance criteria – take NO action. • IF leakage is excessive and does NOT appear to be trending downward, THEN apply scenario 4 response. • Verify containment pressure ≥ 96% Pa. • Reset Test phase start time in ILRT computer (i.e. regenerate arrays from data point directly AFTER corrective action was taken).
NOTE: Typically excessive leakage will be detected and addressed during stabilization.	8. Containment Boundary, NOT Locally Leak Rate Testable	• Continue collecting data if leakage shows a downward trend that can be projected to drop below acceptance criteria – take NO action. • Evaluate whether leak can be measured later with an Appendix J leak test. IF YES, THEN proceed as described in scenario 1 above. • IF leakage can NOT be determined later with a local leakage rate style test, THEN evaluate whether leak can be isolated at test pressure. • IF leakage can be isolated with containment at pressure, THEN remain in Test Mode long enough to measure leakage, then isolate the leak. • Verify containment pressure ≥ 96% Pa. • Reset Test mode start and quantify change once leak is isolated (e.g. final measured leakage – measured leakage observed prior to action). • IF leakage can NOT be isolated at test pressure, THEN quantify leakage using ILRT computer, notify SSO, ILRT Test Management and request permission to depressurize to < 12 psi to effect repairs. • Record/explain action in Attachment 1, (Test Supervisor's Log) AND Attachment 7, (Test Exceptions Log). Modify penetration's test status in Attachment 9, (Containment Penetration Summary).

ATTACHMENT 11
CONTINGENCIES

TEST PHASE	LEAK SCENARIO	RESPONSE
Hold Test (ILRT) Continued.	9. Test Boundary	• IF observed leakage is from a line or component that is a Test Boundary, NOT a containment boundary as determined by the ILRT Test Supervisor (e.g. such as a flange on the pressurization line), THEN take steps to isolate or correct leakage. • Verify containment pressure ≥ 96% Pa. • Restart data collection in Test mode, continue test. • Record/explain action in Attachment 1, (Test Supervisor's Log).
Verification Test (Leakage out of acceptance band HIGH)	10. Containment Boundary, Locally Leak Rate Testable	• Apply scenario 7 response. • Verify containment pressure ≥ 96% Pa. • Restart data collection in Test mode, complete another ILRT, then verify that test result. • Record/explain action in Attachment 1, (Test Supervisor's Log) AND Attachment 7, (Test Exceptions Log). Modify penetration's test status in Attachment 9, (Containment Penetration Summary).
NOTE: Leakage should have been identified earlier in the test. Changes in leakage at this point are typically due to plant system/lineup changes	11. Containment Boundary, <u>NOT</u> Locally Leak Rate Testable	• Apply scenario 8 response. • Verify containment pressure ≥ 96% Pa. • Restart data collection in Test mode, complete another ILRT, then verify that test result. • Record/explain action in Attachment 1, (Test Supervisor's Log) AND Attachment 7, (Test Exceptions Log). Modify penetration's test status in Attachment 9, (Containment Penetration Summary).

EXCESSIVE LEAKAGE continued

TEST PHASE	LEAK SCENARIO	RESPONSE
Verification Test Continued	12. Test Boundary	• Apply scenario 9 response. • Verify containment pressure ≥ 96% Pa. • Restart data collection in Test mode, complete another ILRT, then verify that test result. • Record/explain action in Attachment 1, (Test Supervisor's Log) AND Attachment 7, (Test Exceptions Log). Modify penetration's test status in Attachment 9, (Containment Penetration Summary).
Depressurization	13. ANY	• IF ILRT, Verification Test passed, and leakage is from a Test Boundary, THEN NO IMPACT to ILRT results. • IF leakage is through a containment boundary, THEN ILRT Supervisor, ILRT Management and Plant Management will evaluate leak path. • IF directed by Test Supervisor, THEN ISOLATE leak path. • IF leakage path can NOT be isolated and it represents a safety hazard, THEN it may be prudent to secure depressurization while additional boundaries/safety precautions are established. • Continue depressurization to atmospheric.

4.0 UNEXPECTED ALARMS / INDICATIONS / CONDITIONS

4.1 Any unexpected alarms, indications OR conditions SHALL be discussed with the ILRT supervisor and other departments / individuals as germane to the condition AND addressed as determined appropriate to the situation.

5.0 RCS FILLING OR BORATION

5.1 Use OP-301A, Refueling Outage RCS Drain and Fill Operations for draining and filling the RCS.

6.0 AIRLOCK LEAKAGE

6.1 PERSONNEL HATCH AIRLOCK RAX-1

IF the outer Personnel Airlock door is CLOSED to allow pressurization of the airlock due to excessive leakage from the inner door proceed as follows:

_____ / _____
Initials/Date

6.1.1 PRESSURIZE the airlock to within 0.5 psi of 54 psig, accounting for instrument error of gauge used, per guidance of SP-181.

_____ / _____
Initials/Date

6.1.2 ISOLATE air supply from airlock.

_____ / _____
Initials/Date

6.1.3 INSTALL a test gauge at RAV-5/6 per Attachment 17

_____ / _____
Initials/Date

6.1.4 CLOSE SAV-74

_____ / _____
Initials/Date

6.1.5 OPEN SAV-75 to vent air supply.

_____ / _____
Initials/Date

6.2 EQUIPMENT HATCH AIRLOCK RAX-2

IF the outer Equipment Hatch Airlock door is CLOSED to allow pressurization of the airlock due to excessive leakage from the inner door proceed as follows:

_____ / _____
Initials/Date

6.2.1 PRESSURIZE the airlock to within 0.5 psi of 54 psig, accounting for instrument error of gauge used, per guidance of SP-181.

_____ / _____
Initials/Date

6.2.2 ISOLATE air supply from airlock.

_____ / _____
Initials/Date

6.2.3 INSTALL a test gauge at RAV-7/8 per Attachment 17

_____ / _____
Initials/Date

6.2.4 CLOSE SAV-72

_____ / _____
Initials/Date

6.2.5 OPEN SAV-76 to vent air supply

_____ / _____
Initials/Date

7.0 VERIFICATION TEST FLOWMETER CONTINGENCIES

7.1 INADEQUATE FLOWRATE AT STEP 4.2.6

IF the steps taken in 3.4.10 to improve flowrate to the Verification Test Flowmeters proved inadequate during step 4.2.6, proceed as follows:

7.1.1 CONNECT ½" I.D. hose (or greater) to the 1" tee at the inlets to LRV-64 and LRV-65.

_____ / _____
Initials/Date

7.1.2 Run the hose to Penetration #116 Test Connection Isolation Valve LRV-116 and **CONNECT** hose to outlet of valve (pipe cap threads).

_____ / _____
Initials/Date

7.1.3 Take necessary steps to ensure connection at LRV-116 is leak tight.

_____ / _____
Initials/Date

7.1.4 REPEAT step 4.2.6 to check for leaks and to verify adequate flow is available through the rotameters FE-4 and/or FE-5.

_____ / _____
Initials/Date

7.2 VERIFICATION TEST USING LRV-116:

7.2.1 **OPEN** LRV-45

_____ / _____
Initials/Date

7.2.2 **VERIFY** LRV-46 CLOSED

_____ / _____
Initials/Date

7.2.3 **OPEN** LRV-116

_____ / _____
Initials/Date

7.2.4 **OPEN** LRV-64 (N/A if not chosen)

_____ / _____
Initials/Date

7.2.5 **OPEN** LRV-65 (N/A if not chosen)

/
Initials/Date

7.2.6 **RETURN** to Step 4.5.3 and complete Verification Test.

/
Initials/Date

7.3 **RESTORE ALTERNATE PATH (IF USED):**

7.3.1 **CLOSE** LRV-116

/
Initials/Date

7.3.2 **REMOVE** hose and fittings from LRV-116

/
Initials/Date

7.3.3 **CAP** LRV-116

/
Initials/Date

7.3.4 **CLOSE** LRV-45

/
Initials/Date

7.3.5 **REINSTALL** LRV-69 and LRV-63 and associated tubing removed in Step 3.4.10 up to and including tee at LRV-64 & LRV-65.

_____ / _____
Initials/Date

7.3.6 **REINSTALL** LRV-66, LRV-67 and associated tubing if removed.

_____ / _____
Initials/Date

II-0002

ATTACHMENT 12
ILRT VERIFICATION TEST AND FLOW DATA
(Page 1 of 3)

Leak Stab. RMC Verf. 16:45

START TIME ~~1604~~ END TIME 1945 (Page 1 of 1)

START DATE 12/4/05 END DATE 12/4/05

TIME	Serial# 0002	Temperature	Ambient Pressure*	CORRECTED FLOW	INT.
1604	16	74.16	14.76	15.95	RMC
1619	16	74.15		15.95	RMC
1634	16	74.16		15.95	RMC
1645	16	74.15		15.95	RMC
1700	16	74.14		15.95	RMC
1715	16	74.12		15.95	RMC
1730	16.5	74.12		16.45	RMC
1745	16.0	74.1		15.95	RMC
1800	16.0	74.1		15.95	RMC
1815	16.0	74.1		15.95	RMC
1830	16.4	74.1		16.05	RMC
1845	16.0	74.1		16.05	RMC
1900	16.1	74.1		16.05	RMC
1915	16.0	74.05		15.95	RMC
1930	16.1	74.05		16.05	RMC
1945	16.0	74.1		15.95	

*Ambient pressure reading is only required once - at beginning of Verification Phase.

The goal is to set and maintain 16 scfm for an imposed leak. Readings are taken at 15 minute intervals to match the data scan intervals on the ILRT computer.

The Verification Test typically lasts only 4-6 hours. Make additional copies of this sheet as necessary.

CALCULATE LO AS FOLLOWS:

A. If a rotometer is used to measure the imposed leak, correct its reading to actual conditions as follows:

$$Fc = Fr\sqrt{\frac{Pm}{Pc} X \frac{Tc}{Tm}}$$

Where

Fc = corrected flow.

Fr = reading from rotometer (LR-004-FI or LR-005-FI).

Pm = back pressure at rotometer during test (atmospheric).

Tm = temperature of flow through rotometer during verification test (LR-57-TI or Avg. Cntmnt Temp.).

Pc = pressure that rotometer calibration was performed at (from cal. sheet).

Tc = temperature rotometer calibration was performed at (from cal. sheet).

Instrument Used: 0002 (Serial #)

Pm = 14.76 psia

Tm = 534 ~~74~~ oR 12/4/05

Pc = 14.67 psia

Tc = 528 ~~68~~ oR 12/4/05

Fr = 16 SCFM

B. Enter the corrected flow reading into the ILRT computer program. It will establish the acceptance criteria for the Verification Test results.

Fc value entered: 15.95 scfm

NOTE

The ILRT Inc Data Management program automatically calculates L_0 in % wt/day based on an input of atmospheric pressure on corrected flow (Fc). The following steps are performed solely to verify that the proper data was input into the computer program, and that the Upper and Lower Limits the computer displays are correct.

C. Calculate the L_0 value imposed in weight % day using the following formula:
1. Fc (in SCF/m) x 0.07517 lbs/SCF x 1440 min/day = L_0 in lbs/day.
2. Fc (in lbm/day): 1726.5 +
3. L_o (in lbs/day)/Wt of Containment Air Mass at End of ILRT x 100 = L_0 (in % wts/day).
4. Mass value used: 686722 lbm
5. L_o = 0.2522 %wt/day

D. The Composite Leakage Rate (Lc), as measured by the ILRT Measurement System and calculated using the same analysis technique used to calculate the ILRT acceptance criteria, SHALL satisfy the following:

$$(L_0 + L_{am} - 0.25\ L_a) \leq L_c \leq (L_o + L_{am} + 0.25.\ L_a)$$

(0.2865) < ~~0.2~~ < (0.4115)
Lower Limit L_c Upper Limit

Where:

L_o = 0.2522 %wt/day (value from Section 2.0, C.3 above)

L_{am} = 0.0968 %wt/day (from Step 6.4.6.A.2)

ATTACHMENT 13

INTENTIONALLY LEFT BLANK

HOURLY READINGS:

Record the following readings to provide potential correlations between any leakage change and changes in the containment net free volume. Manually recording these readings is NOT required if a Trend Report is established on plant computer. IF manual readings are taken, THEN record hourly. Attach Trend Report printouts to Attachment 16, Computer Printouts and Attachments. Trend reports should read every 15 minutes, print hourly.

TIME:	Przr Level RC-001-LIR1	Przr Level RC-001-LIR3	Rx Sump Level WD-222-LI	Rx Sump Level WD-302-LI	OTSG A LEVEL SP-1A-LI1	OTSG B LEVEL SP-1B-LI1	RCDT Level WD-23-LI1	Core Flood Tank A CF-2-LI1	Core Flood Tank B CF-2-LI3
1500	125	125	2.6	0	375	365	96	8.18	8.07
1600	125	125	2.6	0	375	365	96	8.18	8.07
1700	117	118	2.6	0	375	365	96	8.19	8.08
1800	119	119	2.2	0	375	365	96	8.20	8.09
1900	119	118	2.2	0	375	365	96	8.20	8.09
2000	117	120	2.2	0	375	365	97	8.20	8.09
2100	120	125	2.2	0	375	365	97	8.18	8.09
2200	125	132	2.2	0	375	365	97	8.18	8.09
2300	129	136	2.3	0	375	365	97	8.18	8.08
0000	130	137	2.3	0	375	365	97	8.18	8.08
0100	130	137	2.4	0	375	365	97.5	8.18	8.08
0200	130	137	2.8	0	375	365	98	8.18	8.08
0300	130	137	2.8	0	375	365	98	8.18	8.08
~~0400~~	130	137	2.8	0	375	365	98	8.18	8.08

Make additional copies if necessary

Pg 1 of 3

HOURLY READINGS:

Record the following readings to provide potential correlations between any leakage change and changes in the containment net free volume. Manually recording these readings is NOT required if a Trend Report is established on plant computer. IF manual readings are taken, THEN record hourly. Attach Trend Report printouts to Attachment 16, Computer Printouts and Attachments. Trend reports should read every 15 minutes, print hourly.

TIME:	Przr Level RC-001-LIR1	Przr Level RC-001-LIR3	Rx Sump Level WD-222-LI	Rx Sump Level WD-302-LI	OTSG A LEVEL SP-1A-LI1	OTSG B LEVEL SP-1B-LI1	RCDT Level WD-23-LI1	Core Flood Tank A CF-2-LI1	Core Flood Tank B CF-2-LI3
0500	129	137	2.8	0	375	365	98	8.18	8.08
0600	129	137	2.8	6	375	365	98	8.18	8.08
0700	129	137	2.8	0	375	365	98	8.18	8.08
0800	129	137	2.8	0	375	365	98	8.18	8.08
0900	129	137	2.8	0	375	365	98	8.18	8.08
1000	129	137	2.8	0	375	365	98	8.18	8.08
1100	129	135	2.8	0	375	365	98	8.18	8.08
1200	129	135	2.8	0	375	365	98	8.18	8.08
1300	129	135	2.8	0	375	365	98	8.18	8.08
1400	129	135	2.8	0	375	365	98	8.18	8.08
1500	128	135	2.8	0	375	365	98	8.18	8.08
1600	128	135	2.8	0	375	365	98	8.18	8.08
1700	128	135	2.8	0	375	365	98	8.18	8.08
1800	128	135	2.8	0	375	370	98	8.18	8.08

Make additional copies if necessary

Pg 2 of 3

HOURLY READINGS:

Record the following readings to provide potential correlations between any leakage change and changes in the containment net free volume. Manually recording these readings is NOT required if a Trend Report is established on plant computer. IF manual readings are taken, THEN record hourly. Attach Trend Report printouts to Attachment 16, Computer Printouts and Attachments. Trend reports should read every 15 minutes, print hourly.

TIME:	Przr Level RC-001-LIR1	Przr Level RC-001-LIR3	Rx Sump Level WD-222-LI	Rx Sump Level WD-302-LI	OTSG A LEVEL SP-1A-LI1	OTSG B LEVEL SP-1B-LI1	RCDT Level WD-23-LI1	Core Flood Tank A CF-2-LI1	Core Flood Tank B CF-2-LI3
1900	125	134	2.8	0	375	370	99	8.18	8.08

Make additional copies if necessary

Pg 3 of 3

START AND END OF ILRT HOLD READINGS:

The following readings are required at the start and end of the ILRT Hold Test, and will be used in Attachment 15 to correct the ILRT results for any influence volume changes may have had on the leakage rate.

TANK/VOLUME DESCRIPTION	START	END	LEVEL CHANGE	CHANGE (Gallons)
RB SUMP LEVEL (FT):	2.8	2.8	Ø	Ø
PRESSURIZER (inches):	129/137	128/135	1/2	23.78/47.56
RCDT (inches):	98	98	Ø	Ø
CORE FLOOD TANK A (FT)	8.18	8.18	Ø	Ø
CORE FLOOD TANK B (FT)	8.08	8.08	Ø	Ø
		TOTAL CHANGE (TG):		47.56

START AND END OF VERIFICATION TEST READINGS:

The following readings are required at the start and end of the Verification Test, and will be used to correct the Verification Test results for any influence volume changes may have had on the leakage rate.

TANK/VOLUME DESCRIPTION	START	END	LEVEL CHANGE	CHANGE (Gallons)
RB SUMP LEVEL (FT):	2.8	2.8	ø	ø
PRESSURIZER (inches):	129/135	129/135	ø	ø
RCDT (inches):	98	98	ø	ø
CORE FLOOD TANK A (FT)	8.18	8.18	ø	ø
CORE FLOOD TANK B (FT)	8.08	8.08	ø	ø
		TOTAL CHANGE (TG):		ø

Conversion Factors:

1 inch changes in RB SUMP level = 23.6 gallons

1 inch change in PRESSURIZER level = 23.78 gallons @ 100°F

1 inch change in RCDT level = 32.9 gallons

1 FT change in CFT A level = N/A gallons } NOT vented for 2005 test

1 FT change in CFT B level = N/A gallons

1.0 VOLUME CHANGE CORRECTIONS

1.1 QUANTIFY VOLUME CHANGES:

1.1.1 Data comes from Attachment 14, (Control Room Log). Maintain the correct sign convention throughout this calculation, as we are correcting for the net change in free volume (i.e. some levels may go up, others may go down). A decrease in tank level is NEGATIVE, conversely an increase in a tank or sump level is POSITIVE. Ultimately, the changes will be converted to a %wt/day correction.

1.1.2 NET LEVEL DECREASE: If the net change was negative, the containment net free volume increased, causing the pressure to drop and the leakage to look larger than it should have. In this case a SUBTRACTION is allowed from the ILRT leakage rate results.

1.1.3 NET LEVEL INCREASE: Conversely, if the net level change was positive, the containment net free volume decreased, masking the actual leakage and an ADDITION is required.

Net volume change from Attachment 14 in gallons: 47.56 GALLONS

1.2 CONVERT GALLONS TO FT3 CHANGES:

Record ILRT duration (hours) = (t) Duration = 6 hrs

Calculate net volume change in ft3/day:

dV = (TG/t) (24 hrs/day) (1ft3 / 7.48 gal.)

Where: dV = net containment volume change

TG = sum of level changes in gallons (from table above)

t = test duration in hours

dV = (47.56 gallons/ 6 hours) (24) (0.13367 ft3 / gallon)

dV = 25.43 ft3 / day

NOTE

Reference Step 1.1 for guidance pertaining to sign convention and addition/subtraction requirements.

2.0 PRELIMINARY TYPE B & C PENALTY ADDITIONS

2.1 Total of as-left MNPLR for penalty additions from Attachment 9, Containment Penetration Summary:

Total Penalty Addition (sccm): 14,791 sccm (conservative estimate)

2.2 Convert the MNPLR Penalty Addition to lbm/day:

Penalty Addition = (14,791 sccm)(1scf/28,317scc)(0.07517 lbm/scf)(1440 min/day)

Penalty Addition (in lbm/day) = 56.54

2.3 Convert the lbm/day Penalty Addition to %wt/day value:

Penalty Addition (in lbm/day) = (56.54 lbm/day * 100) / 686,722 initial containment air mass (lbm)
Step 2.2

Penalty Addition (%wt/day) = 0.0082

3.0 PRELIMINARY LEAKAGE SAVINGS CALCULATION

3.1 Total of leakage savings for as-found ILRT calculation from Attachment 9, Containment Penetration Summary:

Leakage Savings Addition (sccm): 108608.45

3.2 Convert the Leakage Savings Addition to lbm/day:

Leakage Savings Addition = (108608.45 sccm)(1scf/28,317scc)(0.07517 lbm/scf)(1440 min/day)

Leakage Savings Addition (in lbm/day) = 415.168

3.3 Convert the lbm/day Leakage Savings Addition to %wt/day value:

Leakage Savings Addition (in lbm/day) = (415.168 lbm/day * 100) / 686722 initial containment
Step 3.2 air mass (lbm)

Leakage Savings Addition (%wt/day) = 0.06046% wt/day

(This calculation will need to be repeated, COPY this page as necessary)

4.0 FINAL TYPE B & C PENALTY ADDITIONS

4.1 The preliminary ILRT results will be based on existing local leakage rate results, some of which may be replaced with tests performed after the ILRT. When all local leakage rate testing is completed, enter the results on Attachment 9, Containment Penetration Summary and calculate the total of as-left MNPLR for penalty additions:

Total Penalty Addition (sccm): 4789.74

4.2 Convert the MNPLR Penalty Addition to lbm/day:

Penalty
Addition =4789.74sccm)(1scf/28,317scc)(0.07517 lbm/scf)(1440 min/day

Penalty
Addition (in lbm/day) = 18.309

4.3 Convert the lbm/day Penalty Addition to %wt/day value:

Penalty
Addition (in lbm/day) = (18.309 lbm/day * 100) / 686,722 initial containment
Step 4.2 air mass (lbm)

Penalty
Addition (%wt/day) = 0.0027

5.0 FINAL LEAKAGE SAVINGS CALCULATION

5.1 The preliminary ILRT results will be based on existing local leakage rate results, some of which may be replaced with tests performed after the ILRT. If maintenance is perfomed on components NOT exposed to the ILRT test pressure, any leakage savings must be included in the Final As-Found ILRT results. When all local leakage rate testing is completed, enter the results on Attachment 9, Containment Penetration Summary and calculate the total leakage savings for as-found ILRT calculation from Attachment 9, Containment Penetration Summary:

Leakage Savings Addition (sccm): 108613.23

5.2 Convert the Leakage Savings Addition to lbm/day:

Leakage Savings
Addition = (108613.23 sccm)(1scf/28,317scc)(0.07517 lbm/scf)(1440 min/day)

Leakage Savings
Addition (in lbm/day) = 415.186

5.3 Convert the lbm/day Leakage Savings Addition to %wt/day value:

Leakage Savings
Addition (in lbm/day) = (415.186 lbm/day * 100) / 686,722 initial containment
Step 5.2 air mass (lbm)

Leakage Savings
Addition (%wt/day) = 0.060467 wt/day

(This calculation may need to be repeated COPY this page as necessary)

6.0 PRELIMINARY AS-LEFT ILRT RESULTS:

CHECK box for results used to accept ILRT

	MASS POINT (ANSI 56.8-1994) ☐	TOTAL TIME (BN-TOP-1) ☑
6.1 MEASURED LEAKAGE:	N/A	0.0861
6.2 REGRESSION LINE LEAKAGE Lam:		0.0968
6.3 LEAKAGE AT 95%UCL:		0.1338
6.4 MNPLR Penalty Additions (from 2.3)		0.0082
6.5 Volume Change Correction (from 1.3)		-0.00127
6.6 PRELIMINARY AS-LEFT ILRT Result:		0.14073 % wt/day

7.0 PRELIMINARY AS-FOUND ILRT RESULTS

USE results used to accept ILRT

	MASS POINT (ANSI 56.8-1994) ☐	TOTAL TIME (BN-TOP-1) ☐
7.1 AS-LEFT ILRT RESULT (from 6.6):	N/A	0.14073
7.2 LEAKAGE SAVINGS (from 3.3):		+ 0.06046
7.3 PRELIMINARY AS-FOUND ILRT Result:		0.20119

8.0 FINAL AS-LEFT ILRT RESULTS

CHECK box for results used to accept ILRT

	MASS POINT (ANSI 56.8-1994)	☐	TOTAL TIME (BN-TOP-1)	☒
8.1 MEASURED LEAKAGE:	N/A		0.0861	
8.2 REGRESSION LINE LEAKAGE Lam:			0.0968	
8.3 LEAKAGE AT 95%UCL:			0.1338	
8.4 MNPLR Penalty Additions (from 4.3)			0.0027	
8.5 Volume Change Correction (from 1.3)			-0.0013	
8.6 FINAL AS-LEFT ILRT Result:(<75%La)			0.1352	%wt/day

9.0 FINAL AS-FOUND ILRT RESULTS

USE results used to accept ILRT

	MASS POINT (ANSI 56.8-1994)	☐	TOTAL TIME (BN-TOP-1)	☐
9.1 AS-LEFT ILRT RESULT (from 8.6):	N/A		0.1352	
9.2 LEAKAGE SAVINGS (from 5.3):			0.06046	
9.3 FINAL AS-FOUND ILRT Result:			0.19566	

ATTACHMENT 16
COMPUTER PRINTOUTS AND ATTACHMENTS
(Page 1 of 1)

The purpose of this attachment is to provide a single location in the procedure for collecting computer printouts from the plant computer trend report, the ILRT data management computer and other sources

LIST OF PRINTOUTS AND ADDITIONAL ATTACHMENTS:

Attachment ~~(19)~~ (16A) Certification of ILRT, Inc Data Management Program

Att. (16b) Stabilization Phase

Make additional copies if needed

ATT (14) BJ

ATT (16A)

ILRT Inc.
812 Benninger Drive
Brandon, FL 33510
(813) 571-9981
http://www.ILRT.com

November 30, 2005
ILRT-SCL-CRU3-05

Mr. Timothy Howard
Progress Energy Inc
Crystal River Unit 3
Power Line Road
Crystal River, FL

Subject: Certification of the ILRT Inc. Data Management Program

Dear Tim:

In accordance with your P.O. **#00230070**, ILRT Inc. is applying its Quality Assurance Program to activities associated with the software and instrumentation used to perform the ILRT. ILRT Inc's QA Manual mandates the application of Software Control Procedure, SCP 1.0-Rev. 5 to control our use of the ILRT Data Management Program while onsite to perform the ILRT for Unit 3. Per SCP 1.0 an "as-installed" certification is performed of the program validating the plant-specific installed constants and verifying program functionality for the ILRT. This letter is to document satisfactory completion of that certification activity.

Initial Certification

ILRT Inc. purchased the rights to the ILRT Data Management Program from General Physics Corporation in January 2001. Included in the purchase was documentation of the General Physics' initial and subsequent certifications of the software. The initial certification of the program required verification of the program through hand calculations and an independent review. Subsequent modifications to the program by General Physics were performed and required formal certifications including:

- Many of the program's routines were "proceduralized" to simplify program configuration control.
- The program listing under went a technical review and documentation upgrade in 1991. Critical portions of the code were identified and annotated with warnings directly in the code itself. Changes to critical code sections require re-certification of the program per the software control procedure, SCP-1.0.
- Re-certification of the program was performed using independently reviewed and verified hand calculations. A copy of the original certification document and the 1991 re-certification is kept on file in our Brandon Florida office, and is available for review there.
- The calculation of average weighted drybulb temperature (volume fraction

application) was changed to conform to the recommendations of ANSI/ANS 56.8-1987.

- The capability to use relative humidity sensors was added to the program.

- In 1993 the leakage stabilization and test termination criteria of ANSI 56.8-1993 (the draft) were added to the program (correcting for errors in the ANSI standard). The program additions were certified to allow us to evaluate plant performance against the proposed criteria prior to issuance of the Option B rule making and the associated regulatory guide. These changes were verified to be identical to the corrected formulas in the approved version of ANSI 56.8-1994 (the formulas were corrected per an NRC letter) via a technical review performed by us in 1994.

As-installed Certification

Certain portions of the program's interface must be changed for each ILRT (the number and type of sensors, the plant's net free volume and La value, etc. must be added). Per SCP-1.0 Rev. 5 these modifications must be checked to verify they have been properly made, and do not impact test results:

- After the computer is linked directly to the instrumentation, a data set is collected for each mode of the program. The data sets are used to verify proper parsing of the data stream by reviewing a data summary sheet from the CILRT computer program. These printouts are included in Attachment A.

- On demand, the program prints out all installed constants. All plant-specific constants inserted into the program are derived from plant reference documentation. A second member of the team independently verifies proper entry of these constants into the program, and counter-signs the printouts. These printouts are included with the certification as Attachment B, and includes the installed constants for the test such as:

    1. Volume fractions for ILRT Measurement System sensors
    2. Installed Calibration Constants
    3. Other constants used by the program such as the values for L_a and the net free volume.

- After sensor volume fractions and calibration constants are installed, a set of pressure, temperature and relative humidity values are manually entered and compared against a pre-existing hand calculation. The program's average pressure, average drybulb temperature, vapor pressure, and containment mass calculations are verified in this manner. Attachment C contains the results of this comparison. The printout in Attachment C is checked and verified by Containment Leakage Rate Testing Team (CLRT) Team members.

ILRT Inc.
812 Benninger Drive
Brandon, FL 33510
(813) 571-9981
http://www.ILRT.com

The initialed printouts for this test are included as part of this certification package. A copy of these printouts is also available for review in the Project Administrative and QA Binder, or, after the test, at our Brandon Florida facility.

The above steps were performed by the Crystal River Unit 3 ILRT Team, which included Mr. George C. Van Wert, Mr. Jerime S. Cornell, Mr. Michael J. Bonning, and Mr. Robert M. Carey. If you have any questions concerning the certification of the ILRT Inc. ILRT Data Management Program, please contact me at 813-571-9981.

Sincerely yours,
ILRT Inc.

Robert M. Carey

Robert M. Carey,
Vice President

ILRT Inc.
812 Benninger Drive
Brandon, FL 33510
(813) 571-9981
http://www.ILRT.com

ATTACHMENT A

DATA STREAM PRINTOUTS

CRYSTAL RIVER 3
INTEGRATED LEAK RATE TEST
DATA POINT SUMMARY SHEET

TEST MODE : VERF
DATE : 322
TIME : 15:42

Pressure Instruments in PSIA

channel	pressure	channel	pressure
1	+14.7714	2	+14.7678

RTDs in degrees F

channel	temp.	channel	temp.	channel	temp.
1	+76.740	2	+77.360	3	+77.490
4	+76.520	5	+75.890	6	+75.370
7	+76.910	8	+77.740	9	+77.320
10	+77.580	11	+78.910	12	+77.030
13	+79.540	14	+78.280	15	+78.320
16	+80.950	17	+77.480	18	+78.330
19	+77.900	20	+76.130	21	+77.660
22	+79.430	23	+78.950	24	+79.220
25	+78.680	26	+77.810	27	+76.800
28	+79.070	29	+76.410	30	+77.020

Relative humidity in percent

channel	%RH	channel	%RH	channel	%RH
1	+27.490	2	+30.600	3	+28.070
4	+27.920	5	+28.610	6	+27.780
7	+25.940	8	+29.840	9	+30.060
10	+23.180				

AVERAGE TEMPERATURE = +77.871 DEG. F
AVERAGE PRESSURE = +14.770 PSIA
AVG VAPOR PRESSURE = +0.1339 PSIA
MASS = +146980.60 LBM

SCAN OF ALL INSTRUMENTS - SAT. [illegible] 11/17/05

Second check SAT. [illegible] 11/17/05

CRYSTAL RIVER 3
INTEGRATED LEAK RATE TEST
DATA POINT SUMMARY SHEET

TEST MODE : TEST
DATE : 322
TIME : 15:44

Pressure Instruments in PSIA

channel	pressure	channel	pressure
1	+14.7723	2	+14.7686

RTDs in degrees F

channel	temp.	channel	temp.	channel	temp.
1	+76.770	2	+77.380	3	+77.520
4	+76.550	5	+75.910	6	+75.380
7	+76.940	8	+77.770	9	+77.360
10	+77.610	11	+78.930	12	+77.050
13	+79.550	14	+78.310	15	+78.350
16	+80.950	17	+77.500	18	+78.360
19	+77.910	20	+76.140	21	+77.680
22	+79.440	23	+78.970	24	+79.230
25	+78.700	26	+77.840	27	+76.800
28	+79.070	29	+76.410	30	+77.040

Relative humidity in percent

channel	%RH	channel	%RH	channel	%RH
1	+27.230	2	+30.380	3	+27.900
4	+27.650	5	+28.420	6	+27.450
7	+25.500	8	+29.680	9	+29.850
10	+22.840				

AVERAGE TEMPERATURE = +77.891 DEG. F
AVERAGE PRESSURE = +14.770 PSIA
AVG VAPOR PRESSURE = +0.1327 PSIA
MASS = +146995.74 LBM

SCAN OF ALL INSTRUMENTS — SAT. [signature] 11/17/05

Second check SAT.
[signature]
11/17/05

CRYSTAL RIVER 3
INTEGRATED LEAK RATE TEST
DATA POINT SUMMARY SHEET

TEST MODE : STABLE
DATE : 322
TIME : 15:45

Pressure Instruments in PSIA

channel	pressure	channel	pressure
1	+14.7725	2	+14.7688

RTDs in degrees F

channel	temp.	channel	temp.	channel	temp.
1	+76.770	2	+77.380	3	+77.530
4	+76.550	5	+75.910	6	+75.380
7	+76.950	8	+77.780	9	+77.370
10	+77.610	11	+78.930	12	+77.050
13	+79.560	14	+78.320	15	+78.350
16	+80.960	17	+77.500	18	+78.370
19	+77.910	20	+76.140	21	+77.680
22	+79.450	23	+78.980	24	+79.230
25	+78.700	26	+77.850	27	+76.800
28	+79.070	29	+76.400	30	+77.040

Relative humidity in percent

channel	%RH	channel	%RH	channel	%RH
1	+27.210	2	+30.360	3	+27.850
4	+27.560	5	+28.390	6	+27.390
7	+25.430	8	+29.610	9	+29.790
10	+22.620				

AVERAGE TEMPERATURE = +77.895 DEG. F
AVERAGE PRESSURE = +14.771 PSIA
AVG VAPOR PRESSURE = +0.1325 PSIA
MASS = +146999.15 LBM

SCAN OF ALL INSTRUMENTS - SAT. [illegible] 11/17/05

Second check SAT.

[illegible] 11/17/05

CRYSTAL RIVER 3
INTEGRATED LEAK RATE TEST
DATA POINT SUMMARY SHEET

TEST MODE : DEPRESS
DATE : 322
TIME : 15:46

Pressure Instruments in PSIA

channel	pressure	channel	pressure
1	+14.7719	2	+14.7683

RTDs in degrees F

channel	temp.	channel	temp.	channel	temp.
1	+76.780	2	+77.400	3	+77.540
4	+76.560	5	+75.920	6	+75.380
7	+76.960	8	+77.790	9	+77.380
10	+77.630	11	+78.950	12	+77.060
13	+79.550	14	+78.340	15	+78.360
16	+80.970	17	+77.510	18	+78.380
19	+77.910	20	+76.140	21	+77.690
22	+79.450	23	+78.990	24	+79.240
25	+78.690	26	+77.850	27	+76.810
28	+79.070	29	+76.400	30	+77.040

Relative humidity in percent

channel	%RH	channel	%RH	channel	%RH
1	+27.000	2	+30.210	3	+27.750
4	+27.450	5	+28.330	6	+27.290
7	+25.360	8	+29.540	9	+29.740
10	+22.500				

AVERAGE TEMPERATURE = +77.902 DEG. F
AVERAGE PRESSURE = +14.770 PSIA
AVG VAPOR PRESSURE = +0.1320 PSIA
MASS = +146996.51 LBM

Scan of all instruments - Sat. George [illegible] 11/17/05

Second check SAT.
Michael J Bonin 11/17/05

ILRT Inc.
812 Benninger Drive
Brandon, FL 33510
(813) 571-9981
http://www.ILRT.com

ATTACHMENT B

INSTALLED CONSTANTS

CRYSTAL RIVER UNIT 3
December 2005 ILRT INSTALLED CONSTANTS

RTD WEIGHT FACTORS

RTD 1 = 0.021300	RTD 2 = 0.021300	RTD 3 = 0.021200
RTD 4 = 0.021300	RTD 5 = 0.021200	RTD 6 = 0.021200
RTD 7 = 0.036100	RTD 8 = 0.036100	RTD 9 = 0.036000
RTD 10 = 0.036100	RTD 11 = 0.036100	RTD 12 = 0.036000
RTD 13 = 0.036100	RTD 14 = 0.039100	RTD 15 = 0.039000
RTD 16 = 0.039000	RTD 17 = 0.039100	RTD 18 = 0.039000
RTD 19 = 0.039000	RTD 20 = 0.039100	RTD 21 = 0.058800
RTD 22 = 0.058800	RTD 23 = 0.013500	RTD 24 = 0.016500
RTD 25 = 0.058800	RTD 26 = 0.036700	RTD 27 = 0.036800
RTD 28 = 0.013500	RTD 29 = 0.016500	RTD 30 = 0.036800

RTD WEIGHTING FACTOR SUM = 1.000000

RHD WEIGHT FACTORS

RHD 1 = 0.126700	RHD 2 = 0.126700
RHD 3 = 0.126600	RHD 4 = 0.091100
RHD 5 = 0.091100	RHD 6 = 0.091100
RHD 7 = 0.176400	RHD 8 = 0.033000
RHD 9 = 0.110300	RHD 10 = 0.027000

RHD WEIGHTING FACTOR SUM = 1.000000

PRESSURE GAUGE WEIGHT FACTORS

PRESS. GAUGE 1 = 0.500000 PRESS. GAUGE 2 = 0.500000

PRESSURE WEIGHTING FACTOR SUM = 1.000000

CONTAINMENT VOLUME = 2000000
LA = 0.25

Installed constants. [signature] 11/17/05

Second check Sat.
[signature] 11/17/05

ILRT Inc.
812 Benninger Drive
Brandon, FL 33510
(813) 571-9981
http://www.ILRT.com

ATTACHMENT C

COMPARISON TO HAND CALCULATIONS

ILRT Hand Calculation Data Sheet

RTD #	oF	Temperature (oR) oF+459.67	VWF	VWF / oR
TE-1	88.000	547.6700	0.02130	0.000039
TE-2	87.890	547.5600	0.02130	0.000039
TE-3	87.780	547.4500	0.02120	0.000039
TE-4	87.670	547.3400	0.02130	0.000039
TE-5	87.560	547.2300	0.02120	0.000039
TE-6	87.450	547.1200	0.02120	0.000039
TE-7	87.340	547.0100	0.03610	0.000066
TE-8	87.230	546.9000	0.03610	0.000066
TE-9	87.120	546.7900	0.03600	0.000066
TE-10	87.010	546.6800	0.03610	0.000066
TE-11	86.900	546.5700	0.03610	0.000066
TE-12	86.790	546.4600	0.03600	0.000066
TE-13	86.680	546.3500	0.03610	0.000066
TE-14	86.570	546.2400	0.03910	0.000072
TE-15	86.460	546.1300	0.03900	0.000071
TE-16	86.350	546.0200	0.03900	0.000071
TE-17	86.240	545.9100	0.03910	0.000072
TE-18	86.130	545.8000	0.03900	0.000071
TE-19	86.020	545.6900	0.03900	0.000071
TE-20	85.910	545.5800	0.03910	0.000072
TE-21	85.800	545.4700	0.05880	0.000108
TE-22	85.690	545.3600	0.05880	0.000108
TE-23	85.580	545.2500	0.01350	0.000025
TE-24	85.470	545.1400	0.01650	0.000030
TE-25	85.360	545.0300	0.05880	0.000108
TE-26	85.250	544.9200	0.03670	0.000067
TE-27	85.140	544.8100	0.03680	0.000068
TE-28	85.030	544.7000	0.01350	0.000025
TE-29	84.920	544.5900	0.01650	0.000030
TE-30	84.810	544.4800	0.03680	0.000068
TE-31	84.700	544.3700	0.0000	0.000000
TE-32	84.590	544.2600	0.0000	0.000000
TE-33	84.480	544.1500	0.0000	0.000000
TE-34	84.370	544.0400	0.0000	0.000000
TE-35	84.260	543.9300	0.0000	0.000000
TE-36	84.150	543.8200	0.0000	0.000000
TE-37	84.040	543.7100	0.0000	0.000000
TE-38	83.930	543.6000	0.0000	0.000000
TE-39	83.820	543.4900	0.0000	0.000000
TE-40	83.710	543.3800	0.0000	0.000000

VWF Sum: 1.0000000
Average Temperature: 545.9933 oR

Calculation Number: PE-002-05
Utility: Progress Energy
Plant Name & Unit: Crystal River Unit 3

Pressure

PI #	PSIA	VWF	PSIA * VWF
1	68.7000	0.5000	34.3500
2	68.6999	0.5000	34.3500

VWF Sum: 1.0000
Average Pressure: 68.7000 PSIA

Vapor Pressure (VP Calculation Details on Sheet 2)

RHD #	%RH	Drybulb	VP	VWF	VP * VWF
RH-1	65.980	87.670	0.4280	0.126700	0.0542
RH-2	65.870	87.340	0.4229	0.126700	0.0536
RH-3	65.760	86.900	0.4163	0.126600	0.0527
RH-4	65.650	86.460	0.4098	0.091100	0.0373
RH-5	65.540	86.130	0.4049	0.091100	0.0369
RH-6	65.430	86.020	0.4028	0.091100	0.0367
RH-7	65.320	85.690	0.3979	0.176400	0.0702
RH-8	65.210	85.470	0.3944	0.033000	0.0130
RH-9	65.100	85.250	0.3910	0.110300	0.0431
RH-10	64.990	85.030	0.3876	0.027000	0.0105

VWF Sum: 1.0000
Average Vapor Pressure: 0.4082

Containment Volume: 2,000,000 FT3

Temperature: 86.3233 oF
Total Pressure: 68.7000 PSIA
Vapor Pressure: 0.4082 PSIA
Dry Air Pressure: 68.2917 PSIA
Containment Air Mass: 675,210.07 LBM

Calculated By: George C. Van Wert — 11/17/05 Date

Reviewed By: Michael J. Bonning — 11/17/05 Date

CRYSTAL RIVER 3
INTEGRATED LEAK RATE TEST
DATA POINT SUMMARY SHEET

TEST MODE : VERF
DATE : 322
TIME : 16:08

Pressure Instruments in PSIA

channel	pressure	channel	pressure
1	+68.7000	2	+68.6999

RTDs in degrees F

channel	temp.	channel	temp.	channel	temp.
1	+88.000	2	+87.890	3	+87.780
4	+87.670	5	+87.560	6	+87.450
7	+87.340	8	+87.230	9	+87.120
10	+87.010	11	+86.900	12	+86.790
13	+86.680	14	+86.570	15	+86.460
16	+86.350	17	+86.240	18	+86.130
19	+86.020	20	+85.910	21	+85.800
22	+85.690	23	+85.580	24	+85.470
25	+85.360	26	+85.250	27	+85.140
28	+85.030	29	+84.920	30	+84.810

Relative humidity in percent

channel	%RH	channel	%RH	channel	%RH
1	+65.980	2	+65.870	3	+65.760
4	+65.650	5	+65.540	6	+65.430
7	+65.320	8	+65.210	9	+65.100
10	+64.990				

AVERAGE TEMPERATURE = +86.323 DEG. F
AVERAGE PRESSURE = +68.700 PSIA
AVG VAPOR PRESSURE = +0.4082 PSIA
MASS = +675210.08 LBM

Manual data entry of hand calculation.
Δ Mass < 0.1 LBM difference. SAT.
George C. Wakefield 11/17/05

Second check SAT.
Michael J. Bennett 11/17/05

CRYSTAL RIVER 3
INTEGRATED LEAK RATE TEST
DATA POINT SUMMARY SHEET

TEST MODE : TEST
DATE : 322
TIME : 16:19

Pressure Instruments in PSIA

channel	pressure	channel	pressure
1	+68.7000	2	+68.6999

RTDs in degrees F

channel	temp.	channel	temp.	channel	temp.
1	+88.000	2	+87.890	3	+87.780
4	+87.670	5	+87.560	6	+87.450
7	+87.340	8	+87.230	9	+87.120
10	+87.010	11	+86.900	12	+86.790
13	+86.680	14	+86.570	15	+86.460
16	+86.350	17	+86.240	18	+86.130
19	+86.020	20	+85.910	21	+85.800
22	+85.690	23	+85.580	24	+85.470
25	+85.360	26	+85.250	27	+85.140
28	+85.030	29	+84.920	30	+84.810

Relative humidity in percent

channel	%RH	channel	%RH	channel	%RH
1	+65.980	2	+65.870	3	+65.760
4	+65.650	5	+65.540	6	+65.430
7	+65.320	8	+65.210	9	+65.100
10	+64.990				

AVERAGE TEMPERATURE = +86.323 DEG. F
AVERAGE PRESSURE = +68.700 PSIA
AVG VAPOR PRESSURE = +0.4082 PSIA
MASS = +675210.08 LBM

Manual data entry of hand calculation.
Δ Mass < 0.1 LBM difference. SAT.
Michael J Romano 11/17/05

Second Check Sat
J S Cowell 11/17/05

CRYSTAL RIVER 3
INTEGRATED LEAK RATE TEST
DATA POINT SUMMARY SHEET

TEST MODE : STABLE
DATE : 322
TIME : 16:26

Pressure Instruments in PSIA

channel	pressure	channel	pressure
1	+68.7000	2	+68.6999

RTDs in degrees F

channel	temp.	channel	temp.	channel	temp.
1	+88.000	2	+87.890	3	+87.780
4	+87.670	5	+87.560	6	+87.450
7	+87.340	8	+87.230	9	+87.120
10	+87.010	11	+86.900	12	+86.790
13	+86.680	14	+86.570	15	+86.460
16	+86.350	17	+86.240	18	+86.130
19	+86.020	20	+85.910	21	+85.800
22	+85.690	23	+85.580	24	+85.470
25	+85.360	26	+85.250	27	+85.140
28	+85.030	29	+84.920	30	+84.810

Relative humidity in percent

channel	%RH	channel	%RH	channel	%RH
1	+65.980	2	+65.870	3	+65.760
4	+65.650	5	+65.540	6	+65.430
7	+65.320	8	+65.210	9	+65.100
10	+64.990				

AVERAGE TEMPERATURE = +86.323 DEG. F
AVERAGE PRESSURE = +68.700 PSIA
AVG VAPOR PRESSURE = +0.4082 PSIA
MASS = +675210.08 LBM

Manual data entry of hand calculation.
A Mass L 0.1 LBM difference. SAT.
Michael J Bonnin 11/17/05

second check Sat
F. S Cowell 11/17/05

CRYSTAL RIVER 3
INTEGRATED LEAK RATE TEST
DATA POINT SUMMARY SHEET

TEST MODE : PRESS
DATE : 322
TIME : 16:32

Pressure Instruments in PSIA

channel	pressure	channel	pressure
1	+68.7000	2	+68.6999

RTDs in degrees F

channel	temp.	channel	temp.	channel	temp.
1	+88.000	2	+87.890	3	+87.780
4	+87.670	5	+87.560	6	+87.450
7	+87.340	8	+87.230	9	+87.120
10	+87.010	11	+86.900	12	+86.790
13	+86.680	14	+86.570	15	+86.460
16	+86.350	17	+86.240	18	+86.130
19	+86.020	20	+85.910	21	+85.800
22	+85.690	23	+85.580	24	+85.470
25	+85.360	26	+85.250	27	+85.140
28	+85.030	29	+84.920	30	+84.810

Relative humidity in percent

channel	%RH	channel	%RH	channel	%RH
1	+65.980	2	+65.870	3	+65.760
4	+65.650	5	+65.540	6	+65.430
7	+65.320	8	+65.210	9	+65.100
10	+64.990				

AVERAGE TEMPERATURE = +86.323 DEG. F
AVERAGE PRESSURE = +68.700 PSIA
AVG VAPOR PRESSURE = +0.4082 PSIA
MASS = +675210.08 LBM

Manual Data entry of Hand Calculation.
Δ Mass < 0.1 LBM difference. SAT.
Michael J Bonnitz 11/17/2005

Second Check Sat
J. S. Cowell 11/17/05

ILRT Inc. Testing Services - STABLE

STABLIZATION MODE
OPTIONS
1 - MANUAL DATA ENTRY
2 - PARAMATER GRAPHS
3 - SENSOR PLOTS
4 - REPRINT CURRENT DATA PT
5 - SENSOR DIFFERENTIALS
6 - ANSI STABILIZATION CRITERIA
7 - BN-TOP-1 STAB. CRITERIA
8 - ANSI CRITERIA PRINTOUT
9 - BN-TOP-1 CRITERIA PRINTOUT
P - PASS WORD MENU
S - GRAFTEL SCAN CONTROL

SUMMARY

TIME =	0930
# OF DATA POINTS =	42
MODE DURATION (IN HRS) =	10.25
TOT TIME MEASURED LEAK =	0.0977
TOT TIME CALCULATED LEAK =	0.2511
TOT TIME 95% UCL =	0.5874
MASS PT LEAK =	0.1420
MASS PT 95% UCL =	0.1558

ANSI TEMPERATURE STABLIZATION CRITERIA MET
BN-TOP TEMPERATURE STABLIZATION CRITERIA MET
ANSI LEAKAGE STABLIZATION CRITERIA MET

POINT SUMMARY: CURRENT VALUE/DIFFERENCE FROM PREVIOUS POINT

AVG TEMP:	74.906/ -0.040	AVG PRESS:	68.003 / -0.005
MASS:	686716.53 / +1.856	AVG DEW PRESS:	0.2196/ -0.0011
		TOTAL PRESS:	68.223 / -0.006

STABLE MODE
CRYSTAL RIVER UNIT 3

TEMPERATURE STABILIZATION UNIT 3

		ANSI 56.8			BN-TOP-1	
TIME	TEMP	1 HR	4 HR	4HR - 1HR	BN1	BN2
0.00	81.592	0.0000	0.0000	0.0000	0.0000	0.0000
0.25	80.787	0.0000	0.0000	0.0000	0.0000	0.0000
0.50	80.156	0.0000	0.0000	0.0000	0.0000	0.0000
0.75	79.653	0.0000	0.0000	0.0000	0.0000	0.0000
1.00	79.235	2.3935	0.0000	0.0000	0.0000	0.0000
1.25	78.876	1.9481	0.0000	0.0000	0.0000	0.0000
1.50	78.567	1.6230	0.0000	0.0000	0.0000	0.0000
1.75	78.295	1.3910	0.0000	0.0000	0.0000	0.0000
2.00	78.058	1.2099	0.0000	0.0000	-1.7668	0.0000
2.25	77.833	1.0743	0.0000	0.0000	-1.4769	1.1595
2.50	77.623	0.9728	0.0000	0.0000	-1.2662	0.8429
2.75	77.436	0.8853	0.0000	0.0000	-1.1083	0.6317
3.00	77.267	0.8150	0.0000	0.0000	-0.9841	0.4964
3.25	77.110	0.7460	0.0000	0.0000	-0.8830	0.4047
3.50	76.965	0.6834	0.0000	0.0000	-0.8010	0.3279
3.75	76.825	0.6120	0.0000	0.0000	-0.7354	0.2625
4.00	76.698	0.5686	1.2233	0.6547	-0.6799	0.2221
4.25	76.578	0.5313	1.0522	0.5209	-0.6275	0.2094
4.50	76.463	0.5015	0.9232	0.4217	-0.5802	0.1895
4.75	76.358	0.4665	0.8237	0.3573	-0.5392	0.1638
5.03	76.239	0.4449	0.7489	0.3040	-0.5053	0.1277
5.25	76.162	0.4143	0.6784	0.2641	-0.4738	0.1358
5.50	76.070	0.3907	0.6241	0.2334	-0.4471	0.1069
5.75	75.979	0.3765	0.5790	0.2025	-0.4225	0.0984
6.00	75.898	0.3664	0.5400	0.1736	-0.4001	0.0897
6.27	75.813	0.3435	0.5051	0.1615	-0.3794	0.0799
6.50	75.743	0.3266	0.4700	0.1434	-0.3598	0.0811
6.75	75.668	0.3108	0.4420	0.1312	-0.3448	0.0600
7.00	75.598	0.3001	0.4173	0.1172	-0.3380	0.0610
7.25	75.534	0.2910	0.3940	0.1029	-0.3141	0.0510
7.50	75.471	0.2729	0.3735	0.1006	-0.2999	0.0564
7.75	75.406	0.2623	0.3546	0.0923	-0.2867	0.0531
8.00	75.346	0.2516	0.3380	0.0864	-0.2760	0.0427
8.25	75.291	0.2427	0.3218	0.0791	-0.2697	0.0475
8.50	75.239	0.2318	0.3061	0.0743	-0.2524	0.0444
8.75	75.186	0.2199	0.2929	0.0731	-0.2411	0.0452
9.00	75.136	0.2099	0.3055	0.0956	-0.2308	0.0412
9.25	75.085	0.2066	0.2693	0.0627	-0.2246	0.0245
9.50	75.038	0.2004	0.2580	0.0576	-0.2161	0.0342
9.75	74.996	0.1903	0.2459	0.0556	-0.2051	0.0439

TEMPERATURE STABILIZATION UNIT 3						
		ANSI 56.8			BN-TOP-1	
TIME	TEMP	1 HR	4 HR	4HR - 1HR	BN1	BN2
10.00	74.946	0.1905	0.2381	0.0476	-0.2002	0.0195
10.25	74.906	0.1786	0.2480	0.0694	-0.1926	0.0303

STABLE MODE
CRYSTAL RIVER UNIT 3

LEAKAGE RATE STABILIZATION SUMMARY UNIT 3

		ANSI 56.8				
DATE	TIME	1 HR LAM	2 HR LAM	ABS DIFF		
338	0.00	0.0000	0.0000	0.0000		
338	0.25	0.0000	0.0000	0.0000		
338	0.50	0.0000	0.0000	0.0000		
339	0.75	0.0000	0.0000	0.0000		
339	1.00	-0.3514	0.0000	0.0000		
339	1.25	-0.1627	0.0000	0.0000		
339	1.50	0.0446	0.0000	0.0000		
339	1.75	0.1735	0.0000	0.0000		
339	2.00	0.2704	-0.0213	0.2917		
339	2.25	0.3655	0.1226	0.2429		
339	2.50	0.3404	0.2224	0.1180		
339	2.75	0.3217	0.2750	0.0467		
339	3.00	0.3001	0.3060	0.0059		
339	3.25	0.2853	0.3245	0.0392		
339	3.50	0.2899	0.3087	0.0187		
339	3.75	0.2857	0.2993	0.0136		
339	4.00	0.3045	0.2986	0.0059		
339	4.25	0.2690	0.2816	0.0126		
339	4.50	0.2868	0.2872	0.0004		
339	4.75	0.2397	0.2728	0.0331		
339	5.03	0.2180	0.2617	0.0437		
339	5.25	0.2446	0.2532	0.0086		
339	5.50	0.1461	0.2218	0.0757		
339	5.75	0.0406	0.1629	0.1223		
339	6.00	0.0078	0.1063	0.0985		
339	6.27	-0.0644	0.0733	0.1377		
339	6.50	0.0052	0.0314	0.0261		
339	6.75	0.0109	-0.0009	0.0119		
339	7.00	0.0426	0.0109	0.0318		
339	7.25	0.0617	0.0061	0.0556		
339	7.50	0.1564	0.0612	0.0952		
339	7.75	0.2232	0.1055	0.1177		
339	8.00	0.1556	0.1179	0.0378		
339	8.25	0.0758	0.1035	0.0277		
339	8.50	-0.0283	0.0976	0.1259		
339	8.75	0.0108	0.1003	0.0895		
339	9.00	0.0635	0.0730	0.0095		
339	9.25	0.0777	0.0522	0.0255		
339	9.50	0.0771	0.0381	0.0390		
339	9.75	0.0534	0.0495	0.0039		

LEAKAGE RATE STABILIZATION SUMMARY UNIT 3						
		ANSI 56.8				
DATE	TIME	1 HR LAM	2 HR LAM	ABS DIFF		
339	10.00	0.0706	0.0636	0.0070		
339	10.25	0.0575	0.0663	0.0088		

ILRT Inc. Testing Services - TESTSCRN

TEST MODE
OPTIONS

1 - MANUAL DATA ENTRY
2 - PARAMETER GRAPHS
3 - SENSOR PLOTS
4 - REPRINT CURRENT DATA PT
5 - SENSOR DIFFERENTIALS
6 - TREND ANALYSIS
P - PASS WORD MENU
S - GRAFTEL SCAN CONTROL

SUMMARY
TIME = 1545

# OF DATA POINTS	= 26
MODE DURATION (IN HOURS)	= 6.00
TOT TIME MEASURED LEAK	= 0.0861
TOT TIME CALCULATED LEAK	= 0.0968
TOT TIME 95% UCL	= 0.1338
MASS POINT LEAK	= 0.0959
MASS POINT 95% UCL	= 0.1004
75 La	= .1875

TERMINATION CRITERIA MET

POINT SUMMARY: CURRENT VALUE/DIFFERENCE FROM PREVIOUS POINT

AVG TEMP:	74.257/	-0.015	AVG PRESS:	67.905 /	-0.002
MASS:	686561.35 /	-5.003	AVG DEW PRESS:	0.2181/	-0.0001
			TOTAL PRESS:	68.123 /	-0.003

TEST MODE
CRYSTAL RIVER UNIT 3

LEAKAGE RATE TREND SUMMARY UNIT 3

		TOTAL TIME			MASS POINT	
DATE	TIME	TTLM	LMCALC	CHANGE	LAM	CHANGE
339	0.25	0.1040	0.0000	0.0000	0.0000	0.0000
339	0.50	0.0086	0.0086	0.0086	0.0087	0.0087
339	0.75	0.0373	0.0166	0.0081	0.0249	0.0162
339	1.00	0.0490	0.0293	0.0127	0.0400	0.0151
339	1.25	0.0485	0.0354	0.0061	0.0453	0.0053
339	1.50	0.0475	0.0384	0.0030	0.0469	0.0015
339	1.75	0.0516	0.0422	0.0038	0.0500	0.0031
339	2.00	0.0566	0.0468	0.0046	0.0542	0.0042
339	2.25	0.0563	0.0498	0.0029	0.0563	0.0021
339	2.50	0.0678	0.0558	0.0060	0.0627	0.0064
339	2.75	0.0783	0.0634	0.0076	0.0710	0.0083
339	3.00	0.0868	0.0715	0.0081	0.0796	0.0087
339	3.25	0.0884	0.0780	0.0065	0.0859	0.0062
339	3.50	0.0788	0.0804	0.0024	0.0866	0.0007
339	3.75	0.0854	0.0838	0.0034	0.0891	0.0025
339	4.00	0.0800	0.0853	0.0014	0.0891	-0.0000
339	4.25	0.0892	0.0883	0.0031	0.0917	0.0026
339	4.50	0.0872	0.0904	0.0020	0.0929	0.0012
339	4.75	0.0872	0.0920	0.0016	0.0937	0.0008
339	5.00	0.0961	0.0949	0.0030	0.0965	0.0028
339	5.23	0.0916	0.0964	0.0015	0.0975	0.0010
339	5.50	0.0871	0.0972	0.0007	0.0971	-0.0004
339	5.67	0.0873	0.0970	-0.0001	0.0968	-0.0003
339	5.75	0.0868	0.0963	-0.0008	0.0964	-0.0004
339	6.00	0.0861	0.0968	0.0005	0.0959	-0.0005

20 POINT MEAN TOTAL TIME CALCULATED LEAKAGE = 7.722905E-02
20 POINT MEAN TOTAL TIME MEASURED LEAKAGE = 7.881339E-02
20 POINT MEAN MASS POINT LEAKAGE = 8.149599E-02
MASS POINT INTERCEPT = 686722.1
MASS POINT SLOPE =-27.44664

ATTACHMENT 17
GAUGE INSTALLATION / REMOVAL SHEET

Test gauges are used in various locations to monitor pressure in spaces/voids as an early indication of leakage from containment, or to indicate leakage between boundaries. The ILRT Test Supervisor may direct installation of additional test gauges when troubleshooting potential leakage paths. Use this attachment to document installation and removal of these test gauges.

GAUGE Serial#	CAL DUE	RANGE	MONITORED AREA/ PURPOSE	GAUGE LOCATION	INSTALLED (Initials/ Date)	REMOVED (Initials/ Date)	CONC VERIF (Initials/ Date)
TG-2695	4-28-6	0-60 psig	"PI-PS" Monitor space between Purge Supply Valves AHV-1C and AHV-1D	Purge Duct Outside RB , AHV-24	11-28-S		
TG-2644	5-7-6	0-60 psig	"PI-PE" Monitor space between Purge Exhaust Valves AHV-1A and AHV-1B	Purge Duct Outside RB , AHV-25	11-28-S		
TG-2220	4-27-6	0-60 psig	"PI-SGA" Main Steam Line	PX Conn. Vlv MSV-505	11-28-S		
TG-2645	2-21-6	0-60 psig	"PI-SGB" Main Steam Line	PX Conn. Vlv MSV-509	11-28-S		
TG-242	2-14-6	0-60 psig	"PI-P" Between Personnel Lock RAX-1 Doors	Outer Door Pressurization Tap, RAV-5	11-29-S		100
TG-2629	1-24-6	0-60 psig	"PI-PHS" Personnel Hatch, RAX-1; Seal	PX Conn. Vlv SAV-75	11-29-S		
TG-2696	1-24-6	0-60 psig	"PI-EHPS" Personnel Hatch, RAX-2, Personnel Seal	PX Conn. Vlv SAV-76	11-28-S		100
TG-2217	2-13-6	0-60 psig	"PI-EHS" Equipment Hatch, RAX-2, Seal	PX Conn. Vlv SAV-77	11-28-S		100
TG-2521	5/4/06	0-60 psig	"PI-E" Between Equipment Lock RAX-2 Doors	Outer Door Pressurization Tap, RAV-6	199		100
TG-2751	4-25-06	0-60 psig	Reactor Building Pressure	Leak Rate Test Panel, LRV-41			
TG-143	1-24-6	0-100 psig	RB Sump Isolation Valves	WDV-810 Test Connection	11-29-S		

IF Pressure Gages are directed to be installed to troubleshoot leakage, THEN the following guidance should be used for installation AND removal.

(1) A different gauge range may be used at the discretion of the Test Supervisor.

SHOULD BE RAV-7/8

To Install
1. Close root stop OR gauge isolation.
2. Remove any installed instrumentation.
3. Install gauge as directed by Test Supervisor

To Remove
1. Close root stop OR gauge isolation.
2. Remove any installed instrumentation.
3. Install instrumentation removed during installation

199 Documented on SP-178, Pg 199, Rev 29B.

ATTACHMENT 17
GAUGE INSTALLATION / REMOVAL SHEET

Test gauges are used in various locations to monitor pressure in spaces/voids as an early indication of leakage from containment, or to indicate leakage between boundaries. The ILRT Test Supervisor may direct installation of additional test gauges when troubleshooting potential leakage paths. Use this attachment to document installation and removal of these test gauges.

GAUGE Serial#	CAL DUE	RANGE	MONITORED AREA/ PURPOSE	GAUGE LOCATION	INSTALLED (Initials/ Date)	REMOVED (Initials/ Date)	CONC VERIF (Initials/ Date)
199B	199B	0-60 psig	"PI-PS" Monitor space between Purge Supply Valves AHV-1C and AHV-1D	Purge Duct Outside RB , AHV-24	199B		
		0-60 psig	"PI-PE" Monitor space between Purge Exhaust Valves AHV-1A and AHV-1B	Purge Duct Outside RB , AHV-25			
		0-60 psig	"PI-SGA" Main Steam Line	PX Conn. Vlv MSV-505			
		0-60 psig	"PI-SGB" Main Steam Line	PX Conn. Vlv MSV-509			
		0-60 psig	"PI-P" Between Personnel Lock RAX-1 Doors	Outer Door Pressurization Tap, RAV-5		12/6/05	29
		0-60 psig	"PI-PHS" Personnel Hatch, RAX-1, Seal	PX Conn. Vlv SAV-75			
		0-60 psig	"PI-EHPS" Personnel Hatch, RAX-2, Personnel Seal	PX Conn. Vlv SAV-76			
199B	199B	0-60 psig	"PI-EHS" Equipment Hatch, RAX-2, Seal	PX Conn. Vlv SAV-77	199B		
TG-2521	5/4/06	0-60 psig	"PI-E" Between Equipment Lock RAX-2 Doors	Outer Door Pressurization Tap, RAV-76	12/2/05		
199B	199B	0-60 psig	Reactor Building Pressure	Leak Rate Test Panel, LRV-41	199B		
199B	199B	0-100 psig	RB Sump Isolation Valves	WDV-810 Test Connection	199B		

Rev 29 Sheet (Pgs) 1 Sheet 1 pgs changed

IF Pressure Gages are directed to be installed to troubleshoot leakage, THEN the following guidance should be used for installation AND removal.

(1) A different gauge range may be used at the discretion of the Test Supervisor.

To Install
1. Close root stop OR gauge isolation.
2. Remove any installed instrumentation.
3. Install gauge as directed by Test Supervisor

To Remove
1. Close root stop OR gauge isolation.
2. Remove any installed instrumentation.
3. Install instrumentation removed during installation

199B Documented as installed on SP-178, Pg. 199, Rev 29. [illegible]

4876
387B (DESK)

ATTACHMENT 17
GAUGE INSTALLATION / REMOVAL SHEET

Test gauges are used in various locations to monitor pressure in spaces/voids as an early indication of leakage from containment, or to indicate leakage between boundaries. The ILRT Test Supervisor may direct installation of additional test gauges when troubleshooting potential leakage paths. Use this attachment to document installation and removal of these test gauges.

	GAUGE Serial#	CAL DUE	RANGE	MONITORED AREA/ PURPOSE	GAUGE LOCATION	INSTALLED (Initials/ Date)	REMOVED (Initials/ Date)	CONC VERIF (Initials/ Date)
119' IB	TG-2695	4-28-6	0-60 psig	"PI-PS" Monitor space between Purge Supply Valves AHV-1C and AHV-1D	Purge Duct Outside RB , AHV-24	11-28-5	12.5.5	12.5.5
142' AB	TG-2644	5-7-6	0-60 psig	"PI-PE" Monitor space between Purge Exhaust Valves AHV-1A and AHV-1B	Purge Duct Outside RB , AHV-25	11-28-5	70 12-5-5	12/5/5
119' IB	TG-2220	4-27-6	0-60 psig	"PI-SGA" Main Steam Line	PX Conn. Vlv MSV-505	11-28-5	12.5.5	12.5.5
119' IB	TG-2645	2-21-6	0-60 psig	"PI-SGB" Main Steam Line	PX Conn. Vlv MSV-509	11-28-5	12.5.5	12.5.5
PER. HATCH	TG-242	2-14-6	0-60 psig	"PI-P" Between Personnel Lock RAX-1 Doors	Outer Door Pressurization Tap, RAV-5	11-29-5	12-2-5	12-5-05 100
PER. HATCH	TG-2629	1-24-6	0-60 psig	"PI-PHS" Personnel Hatch, RAX-1; Seal	PX Conn. Vlv SAV-75	11-29-5	12.5.5	12505
EQ HATCH	TG-2696	1-24-6	0-60 psig	"PI-EHPS" Personnel Hatch, RAX-2, Personnel Seal	PX Conn. Vlv SAV-76	11-28-5	12.5.5	12.5.5 100
EQ HATCH	TG-2217	2-13-6	0-60 psig	"PI-EHS" Equipment Hatch, RAX-2, Seal	PX Conn. Vlv SAV-77	11-28-5	12.5.5	12.5.5 100
EQ HATCH			0-60 psig	"PI-E" Between Equipment Lock RAX-2 Doors	Outer Door Pressurization Tap, RAV-6	199	12.5.5	12.5.5 100
19' IB ✓	TG-2751	4-25-06	0-60 psig	Reactor Building Pressure	Leak Rate Test Panel, LRV-41		12.5.5	12.5.5
TRI. Rm 20' UP	TG-143	1-24-6	0-100 psig	RB Sump Isolation Valves	WDV-810 Test Connection	11-29-5	70 12-5-5	12/5/5

SHOULD BE RAV-7/8

IF Pressure Gages are directed to be installed to troubleshoot leakage, THEN the following guidance should be used for installation AND removal.

(1) A different gauge range may be used at the discretion of the Test Supervisor.

To Install
1. Close root stop OR gauge isolation.
2. Remove any installed instrumentation.
3. Install gauge as directed by Test Supervisor

To Remove
1. Close root stop OR gauge isolation.
2. Remove any installed instrumentation.
3. Install instrumentation removed during installation

199 Documented on SP-178, Pg 199, Rev 29B. [illegible]

4. Open valve closed in step 1

4. Open valve closed in step 1.

ATTACHMENT 17
GAUGE INSTALLATION / REMOVAL SHEET

To install Steam Generator and other space-monitoring pressure gauges perform the following:

INIT

PI-SGA @ A Main Steam Line
1. Close MSV-94/504/505.
2. Connect tubing downstream of MSV-505
3. Install test gauge downstream of MSV-505
4. Open MSV-94/504/505.

PI-SGB @ B Main Steam Line
1. Close MSV-96/508/509.
2. Connect tubing downstream of MSV-509
3. Install test gauge downstream of MSV-509
4. Open MSV-96/508/509.es press

PI-PS, Between Purge Supply Isolation Valves
1. Close AHV-24 (Purge Supply Test Connection).
2. Connect tubing downstream of AHV-24
3. Install test gauge downstream of AHV-24
4. Open AHV-24 (Purge Supply Test Connection).

PI-PE, Between Purge Exhaust Isolation Valves
1. Close AHV-25 (Purge Exhaust Test Connection).
2. Connect tubing downstream of AHV-25
3. Install test gauge downstream of AHV-25
4. Open AHV-25 (Purge Exhaust Test Connection).

*PI-P, Between Personnel Lock RAX-1 Doors
1. Close RAV-5 (Test Connection).
2. Connect tubing downstream of RAV-5
3. Install test gauge downstream of RAV-5
4. Open RAV-5 (Test Connection).

INIT

ATTACHMENT 17
GAUGE INSTALLATION / REMOVAL SHEET

*PI-E, Between Equipment Lock RAX-2 Doors
1. Close RAV-6 (Test Connection). 202
2. Connect tubing downstream of RAV-6 202
3. Install test gauge downstream of RAV-6 202
4. Open RAV-6 (Test Connection). 202

PI-EHS, Equipment Hatch RAX-3 Seal
1. Close SAV-77 (Test Connection).
2. Connect tubing downstream of SAV-77
3. Install test gauge downstream of SAV-77
4. Open SAV-77 (Test Connection).

*These gauges are to be installed ONLY if associated Outer Door needs to be closed and the airlock pressurized.

RB Sump Discharge Line
1. Close WDV-810 (Test Connection)
2. Remove cap at WDV-810
3. Install test gauge at WDV-810
4. Open WDV-810 (Test Connection)

INIT

202 Documented on SP-178, Rev 29B, Pg. 202. 12/02/05

ATTACHMENT 17
GAUGE INSTALLATION / REMOVAL SHEET

*PI-E, Between Equipment Lock RAX-2 Doors
1. Close RAV-76 (Test Connection).
2. Connect tubing downstream of RAV-76
3. Install test gauge downstream of RAV-76
4. Open RAV-76 (Test Connection).

PI-EHS, Equipment Hatch RAX-3 Seal
1. Close SAV-77 (Test Connection).
2. Connect tubing downstream of SAV-77
3. Install test gauge downstream of SAV-77
4. Open SAV-77 (Test Connection).

*These gauges are to be installed ONLY if associated Outer Door needs to be closed and the airlock pressurized.

RB Sump Discharge Line
1. Close WDV-810 (Test Connection)
2. Remove cap at WDV-810
3. Install test gauge at WDV-810
4. Open WDV-810 (Test Connection)

PI-EHPS, Personnel Hatch RAX-2 Seal
1. Close SAV-76 (Test Connection).
2. Connect tubing downstream of SAV-76
3. Install test gauge downstream of SAV-76
4. Open SAV-76 (Test Connection).

PI-PHS, Personnel Hatch RAX-1 Seal
1. Close SAV-75 (Test Connection).
2. Connect tubing downstream of SAV-75
3. Install test gauge downstream of SAV-75
4. Open SAV-75 (Test Connection).

Reactor Building Pressure
1. Close LRV-41 (Test Connection).
2. Connect tubing downstream of LRV-41
3. Install test gauge downstream of LRV-41
4. Open LRV-41 (Test Connection).

2028 Documented on SP-178, Rev 29, Pg. 202 R Foster 12/02/05

PI-E, Between Equipment Lock RAX-2 Doors
1. Close RAV-76 (Test Connection). ____(V)
2. Disconnect tubing downstream of RAV-76 ____
3. Remove test gauge downstream of RAV-76 ____
4. Replace cap downstream of RAV-76 (Test Connection). ____(V)

PI-EHS, Equipment Hatch RAX-2 Seal
1. Close SAV-77 (Test Connection). ____(V)
2. Disconnect tubing downstream of SAV-77 ____
3. Remove test gauge downstream of SAV-77 ____
4. Replace cap downstream of SAV-77 (Test Connection). ____(V)

RB Sump Discharge Line
1. Close WDV-810 (Test Connection) ____(V)
2. Remove test gauge at WDV-810 ____
3. Replace cap downstream of WDV-810 (Test Connection) ____(V)
INIT

PI-EHPS, Personnel Hatch RAX-2 Seal
1. Close SAV-76 (Test Connection). ____(V)
2. Disconnect tubing downstream of SAV-76 ____
3. Remove test gauge downstream of SAV-76 ____
4. Replace cap downstream of SAV-76 (Test Connection). ____(V)

PI-PHS, Personnel Hatch RAX-1 Seal
1. Close SAV-75 (Test Connection). ____(V)
2. Disconnect tubing downstream of SAV-75 ____
3. Remove test gauge downstream of SAV-75 ____
4. Replace cap downstream of SAV-75 (Test Connection). ____(V)

Reactor Building Pressure
1. Close LRV-41 (Test Connection). ____(V)
2. Disconnect tubing downstream of LRV-41 ____
3. Install test gauge downstream of LRV-41 ____
4. Replace cap downstream of LRV-41 (Test Connection). ____(V)

ATTACHMENT 17
GAUGE INSTALLATION / REMOVAL SHEET

To remove Steam Generator/test monitoring pressure gauges perform the following:

PI-SGA @ A Main Steam Line
1. Close MSV-94/504/505. _____ (V)
2. Disconnect tubing downstream of MSV-505 _____
3. Remove test gauge downstream of MSV-505 _____
4. Recap line downstream of MSV-505. _____
5. OPEN MSV-94/504. _____ (V)
   505 OPEN

PI-SGB @ B Main Steam Line
1. Close MSV-96/508/509. _____ (V)
2. Disconnect tubing downstream of MSV-509 _____
3. Remove test gauge downstream of MSV-509 _____
4. Recap the line downstream of MSV-509. _____
5. OPEN MSV-96/508 _____ (V)
   509 close

PI-PS, Between Purge Supply Isolation Valves
1. Close AHV-24 (Purge Supply Test Connection). _____ (V)
2. Disconnect tubing downstream of AHV-24 _____
3. Remove test gauge downstream of AHV-24 _____
4. Replace cap downstream of AHV-24 (Purge Supply Test Connection). _____ (V)

PI-PE, Between Purge Exhaust Isolation Valves
1. Close AHV-25 (Purge Exhaust Test Connection). _____ (V)
2. Disconnect tubing downstream of AHV-25 _____
3. Remove test gauge downstream of AHV-25 _____
4. Replace cap downstream of AHV-25 (Purge Exhaust Test Connection). _____ (V)

PI-P, Between Personnel Lock RAX-1 Doors
1. Close RAV-5 (Test Connection). _____ (V)
2. Disconnect tubing downstream of RAV-5 _____
3. Remove test gauge downstream of RAV-5 _____
4. Replace cap downstream of RAV-5 (Test Connection). _____ (V)

INIT

ATTACHMENT 18
TEST GAUGE PRESSURE READINGS
(Page 1 of 1)

Page ___ of ___

TIME	PI-SGA A OTSG	PI-SGB B OTSG	PI-PS Purge Supply	PI-PE Purge Exhaust	PI-P, RAX-1 Doors	PI-PHS, RAX-1 Seal	PI-EHPS, RAX-2 Pers Htch Seal	PI-E, RAX-2 Doors	PI-EHS, RAX-2 Eq. Htch Seal
Initial value:									

Copy as needed for additional sheets

REVISION SUMMARY

SECTION	DESCRIPTION
Attachment 3A	AHV-24, 25 - Added OPEN to Test Lineup description. This allows early identification of leakage at purge valves during test MSV-133, 134, 135 – Changed Pen # from CLOSED to 320 AHV-1A, 1B, 1C, 1D, 24, 25 – Changed column headings from "Vent Lineup / Initial Date" to "Pen # and Location" Added tag numbers RAX-1 and RAX-2 to existing lineup.
Attachment 3B	WDV-3, 4, 1022 – Added Pen # and Location information WDV-810, 1242 – Added to allow identification of leakage downstream of WDV-4
Attachment 3C	NGV-194 – Added to valve lineup for consistency NGV-79, 93 – Change Test Lineup position to CLOSED NGV-262 - Change Test Lineup position to SEALED CLOSED NGV-284 - Change Test Lineup position to CLOSED & CAPPED The penetrations containing the above valves are being LLRT'd in 14R, therefore they will be positioned Closed during the ILRT.
Attachment 17	Added 0-100 psig gauge for RB Sump Isolation Valve Added instruction for installation and removal of test gauge at WDV-810

December 4, 2005
II-PTR-2005005
PE-003-05

Mr. Berry Foster
Progress Energy
Crystal River Unit 3
Powerline Road
Crystal River, FL

Subject: Preliminary Test Report, 2005 ILRT

Dear Berry:

The ILRT (including Verification Test) at the Crystal River Nuclear Plant Unit 3 was completed at 19:45 on December 4, 2005. The preliminary leakage rate results, including B&C penalty additions (~0.0082%wt/day) and corrections available at the time of testing were acceptable. Please note that the penalty additions may change based on post-test "as-left" LLRT results. The computer test results (sans additions) are shown in the table below:

Analysis Technique	Test Result	Acceptance Criteria
Total Time (Measured Leakage)	0.0968%wt/day	$\leq$ 75%L_a = 0.15%wt/day
Total Time (Leakage at 95%UCL)	0.1338%wt/day	$\leq$ 75%L_a = 0.15%wt/day

As a 6 hour ILRT was performed per BN-TOP-1, Rev.1, the official test results are those obtained using the Total Time data analysis technique. With known additions, (penalties, level corrections) the Preliminary "As Left" ILRT leakage results **were acceptable at ~0.14073%wt/day**. The results may be modified by further local leakage rate testing results.

The ILRT was then validated by the successful completion of the verification test required by 10 CFR 50 App J using the Total Time data analysis technique. An imposed leakage of 16 scfm (15.95 scfm after correction back to calibrated conditions) was set. The imposed leakage equated to 0.2522%wt/day. The results are listed below:

Analysis Technique	Verification Results	Acceptance Criteria
Total Time (L_c)	0.2969 % wt/day	Lam + Lo + 25%La 0.4115%wt/day (Upper Limit) Lam + Lo – 25%La 0.2865%wt/day (Lower Limit)

A copy of the complete set of the individual data sets for the test and verification phases as well as parameter graphs will be provided in the final test report. The draft of the final test report will be submitted within four weeks after receipt of local leakage rate data for penetrations not included in the ILRT, and a copy of the executed procedure, (including all appendices and attachments).

Mr. Robert M. Carey, Mr. Robert E. Shirk, Jr., Mr. Jerime Cornell and Mr. Arthur Giverson provided consulting services and performed the ILRT's data reduction and calculation tasks. If you have any questions concerning the interpretation of the ILRT Data, please contact me at 813-571-9981. ILRT Inc appreciates the opportunity to work with PE, and looks forward to doing so again.

Sincerely yours,
ILRT Inc

Robert M. Carey

Robert M. Carey,

PURCHASE ORDER

Mail Invoice To:
PROGRESS ENERGY FLORIDA, INC.
AKA FLORIDA POWER CORPORATION
PO BOX 870
RALEIGH NC 27602

Purchase Order : 00230070
Revision :
Release :
Printed : 02/23/2006
Page : 1

Please Direct Inquiries to:
MARIA I. RUETHER
Title: CRP BUYER
Phone: 727 820-5291
Fax : 727 820-5193

Vendor:
GEORGE VAN WERT F/3153420452
ILRT INC
29 TALISMAN TERRACE
OSWEGO NY 13126

**** DUPLICATE COPY ****

Payment Terms	%	Days	Net 30 Days	Transit Type	OTHER
ERS N	Reference Contract			Carrier Name	FEDERAL EXPRESS
		FOB	DEST, FRT ALLOWED	FOB Point	

Primary Ship To: PROGRESS ENERGY FLORIDA
CRYSTAL RIVER NUC UNIT 3
15760 W. POWERLINE STREET
CRYSTAL RIVER FL 34428

Attention: .

Instructions: REFERENCE ILRT INC QUOTE NO. GVW-Q050510A DATED MAY 10, 2005 AND ILRT EMAIL PREPARED BY GEORGE VAN WERT DATED MAY 12, 2005. THIS IS A RENTAL ORDER FOR INSTRUMENTATION, EQUIPMENT, AND SOFTWARE IN SUPPORT OF ILRT SERVICES AT CRYSTAL RIVER 3. THE ATTACHED ILRT INC. EQUIPMENT RENTALS MATRIX SUMMARIZES RENTAL CHARGES. ALL SERVICES PROVIDED SHALL BE IN ACCORDANCE WITH ILRT INC. PROPOSAL GVQ-Q05010A. THE TERM OF RENTAL IS APPROX. 2 WEEKS BEGINNING WEEK OF NOV 13, 2005 HOWEVER, THERE IS NO ADDITIONAL CHARGE IF THE EQUIPMENT IS RETAINED ONSITE FOR A LONGER PERIOD DUE TO UNEXPECTED OUTAGE DELAYS. ILRT IS NOT LICENSED TO TRANSPORT OR HOLD RADIOACTIVE MATERIALS, AS SUCH ALL EQUIPMENT USED ON SITE MUST BE FREE RELEASE FOR RETURN TO ILRT INC. AFTER RENTAL PERIOD. INSTRUMENTATION OR CABLES THAT CANNOT BE FREE RELEASE

PURCHASE ORDER

Mail Invoice To:
PROGRESS ENERGY FLORIDA, INC.
AKA FLORIDA POWER CORPORATION
PO BOX 870
RALEIGH NC 27602

Purchase Order : 00230070
Revision :
Release :
Printed : 02/23/2006
Page : 2

BECOME THE PROPERTY OF PROGRESS
ENERGY AND THE REPLACEMENT COST
SHALL BE BILLED IN ACCORDANCE WITH
ATTACHED "LOST" EQUIPMENT REPLACEMENT
COSTS MATRIX.

Fac	Standard Name	Rev	S/P	Text	Header Terms and Conditions - Text at End
	PO T&CS	004	S	N	PO STANDARD TERMS & CONDITIONS

Line	*Quantity*	*UP*	*Item Description*	*Unit Price*	*Extension*
0001	1	LT	Catalog ID:	$3,000.000000	$3,000.00 NON-TAX

Bid Reference: GVW-Q050510A

Schedule: Quantity 1 Delivery Date 11/11/2005

Description: CABLING FOR ILRT INSTRU
CABLING FOR ILRT INSTRUMENTS, NON-SAFETY RELATED. LINE ITEM INCLUDES RENTAL AND SHIPPING. RENTAL PERIOD IS FOR 2 WEEKS, APPROXIMATELY 11/13/05 TO 11/27/05.

Purchase Order Total Amount

TOTAL THIS PO: $3,000.00

Progress Energy Service Co LLC - Agent
AUTHORIZED SIGNATURE

****Standards and Procedures attachments print separately after this document.*

End of Purchase Order