Entergy

Indian Point Energy Center
450 Broadway, GSB
P.O. Box 249
Buchanan, N.Y. 10511-0249
Tel (914) 734-6700

J. E. Pollock
Site Vice President
Administration

NL-10-093

October 05, 2010

U.S. Nuclear Regulatory Commission
ATTN: Document Control Desk
Mail Station O-P1-17
Washington, DC 20555-0001

Subject: **Indian Point Nuclear Power Plant Units 2 and 3**
Response to Request for Additional Information regarding the Inter-Unit Spent Fuel Transfer License Amendment Request (TAC Nos. ME1671, ME1672, and L24299)
Indian Point Units 2 & 3
Docket Nos. 50-247 and 50-286
License Nos. DPR-26 and DPR-64

References:

1) NRC letter to Indian Point Vice President of Operations, 04/20/10, "Indian Point Nuclear Generating Unit Nos. 2 and 3 – Request for Additional Information Regarding Amendment Application for Inter-Unit Spent Fuel Transfer (TAC Nos. ME1671, ME1672, and L24299)"

2) Entergy letter NL-09-076, 07/08/09, "Indian Point Nuclear Power Plant Units 2 and 3 - Application for Unit 2 Operating License Condition Change and Units 2 and 3 Technical Specification Changes to Add Inter-Unit Spent Fuel Transfer Requirements"

3) Entergy letter NL-09-100, 09/28/09, "Indian Point Nuclear Power Plant Units 2 and 3 – Response to Request for Supplemental Information Regarding the Spent Fuel Transfer License Amendment Request (TAC Nos. ME1671, ME1672, and L24299)"

Dear Sir or Madam:

This letter provides Entergy Nuclear Operations, Inc (Entergy) response to the NRC Request for Additional Information (Reference 1) regarding the Entergy license amendment requests concerning inter-unit transfer of fuel (Reference 2) and the supplement to the amendment request (Reference 3).

As detailed in the response to the NRC's Request for Additional Information (RAI), Entergy is proposing to modify, relocate and supplement the originally proposed Operating License changes and Technical Specifications (TS) of Reference 2. The RAI responses (Attachment 1) together with the revised Holtec Licensing Report (Enclosure 1) provide the regulatory basis for this license amendment.

A001
NRR

Entergy is proposing to locate the inter-unit fuel transfer TS within a new Appendix C to the Operating Licenses of both Indian Point Unit 2 (IP2) and 3 (IP3). The associated Operating License changes are presented in Attachment 2 and markups of the Operating Licenses are provided in Attachments 3 and 4. The proposed IP2 Appendix C TS and TS Bases are provided in Attachments 5 and 6, respectively and in Attachments 7 and 8 for IP3. The TS Bases are provided for information only.

As requested by the NRC staff, this submittal includes a complete revision to the licensing report (HI-2094289, Enclosure 1), which integrates the RAI responses, supporting calculations and supporting documentation, and provides the regulatory basis for this submittal.

The additional supporting information provided in this submittal does not alter the conclusion that this proposed activity does not constitute a significant hazard, as documented in Reference 2. A revised no significant hazard determination is included in Attachments 9 and 10 for Indian Point Unit 2 and 3, respectively.

In accordance with 10 CFR 50.91, a copy of this submittal, with non proprietary attachments is being provided to the designated New York State official.

This submittal includes information deemed proprietary by an entity that is providing support to Entergy on this project. As such, in Enclosure 3, a 10 CFR 2.390 affidavit has been executed by the owner of the information. A non proprietary version of this submittal will be provided by October 29, 2010.

There are no new regulatory commitments made in this submittal, however, for completeness, the commitments made in References 2 and 3 are repeated here in Attachment 11.

If you have any questions or require additional information, please contact Mr. Robert Walpole, Licensing Manager at 914-734-6710.

I declare under penalty of perjury that the foregoing is true and correct to the best of my knowledge. Executed on 10-5-10.

Sincerely,

JEP/rw

Attachments and Enclosures:

Attachment 1: Response to Request for Additional Information
Attachment 2: Proposed Operating License Changes
Attachment 3: Marked-up IP2 Operating License Pertaining to Inter-Unit Fuel Transfer
Attachment 4: Marked-up IP3 Operating License Pertaining to Inter-Unit Fuel Transfer
Attachment 5: Indian Point Unit 2 - Appendix C to the Operating License Inter-Unit Fuel Transfer Technical Specifications
Attachment 6: Indian Point Unit 2 - Appendix C to the Operating License Inter-Unit Fuel Transfer Technical Specifications Bases
Attachment 7: Indian Point Unit 3 - Appendix C to the Operating License Inter-Unit Fuel Transfer Technical Specifications
Attachment 8: Indian Point Unit 3 - Appendix C to the Operating License Inter-Unit Fuel Transfer Technical Specifications Bases
Attachment 9: No Significant Hazards Consideration for Indian Point Unit 2 Pertaining to Inter-Unit Fuel Transfer
Attachment 10: No Significant Hazards Consideration for Indian Point Unit 3 Pertaining to Inter-Unit Fuel Transfer
Attachment 11: Commitments Pertaining to Inter-Unit Fuel Transfer

Enclosure 1: Holtec International Licensing Report HI-2094289, Revision 3 (Holtec Proprietary)
Enclosure 2: Holtec International Supporting Reports and Evaluations
Enclosure 3: Affidavit executed pursuant to 10 CFR 2.390 governing the proprietary information included in the Holtec reports and evaluations

cc: NRC Resident Inspector's Office
Mr. John Boska, Senior Project Manager, NRC NRR DORL
Mr. William M. Dean, Regional Administrator, NRC Region 1
Mr. Francis J. Murray Jr., President and CEO, NYSERDA (w/o proprietary information)
Mr. Paul Eddy, New York State Dept. of Public Service (w/o proprietary information)

ATTACHMENT 1 TO NL-10-093

Response to Request for Additional Information

Entergy Nuclear Operations, Inc.
Indian Point Units 2 and 3
Docket Nos. 50-247 and 50-286

REQUEST FOR ADDITIONAL INFORMATION

REGARDING SPENT FUEL TRANSFER

ENTERGY NUCLEAR OPERATIONS, INC.

INDIAN POINT NUCLEAR GENERATING UNIT NOS. 2 AND 3

DOCKET NOS. 50-247 AND 50-286

By letter dated July 8, 2009 (Agencywide Documents Access and Management System (ADAMS) Accession Nos. ML091940177 and ML091940178), and supplemented by letter dated September 28, 2009, (ADAMS Accession Nos. ML092950437 and ML093020080), Entergy Nuclear Operations, Inc. (Entergy or the licensee), submitted a license amendment request for Indian Point Nuclear Generating Unit Nos. 2 and 3 (IP2 and IP3). The proposed changes are requested to provide the necessary controls and permission required for Entergy to move spent fuel from the IP3 spent fuel pool to the IP2 spent fuel pool using a newly designed shielded transfer canister (STC), which is placed inside a HI-TRAC 100D cask for outdoor transport. The Nuclear Regulatory Commission (NRC) staff is reviewing the submittal and has the following questions.

The following provides the NRC questions together with Entergy's responses.

CHAPTER 1 – GENERAL INFORMATION

NRC RAI 1-1

Revise Holtec International document HI-2094289 to incorporate the information and analyses provided in the response to the NRC request for supplemental information and the responses to this request for additional information (RAI). (TCB, CSDAB)

HI-2094289 should serve as the primary document that integrates the supporting calculations and supporting information together and provides the regulatory bases for this license amendment. The application needs to capture the most updated information regarding the system design, evaluations and operations in a single document. That document is HI-2094289. As the application now exists, the information is scattered among several documents and, with the response to staff's RAIs, HI-2094289 contains information that is now outdated, incomplete, or not in agreement with information in the supporting documentation submitted as part of a previous response. This leads to confusion as to what information is correct and is to be used as the basis for the application.

This information is needed to confirm compliance with 10 CFR 50.90.

Response to RAI 1-1

Licensing report HI-2094289 (enclosed) has been updated to be consistent with the responses to the request for supplemental information (RSI) previously submitted to the NRC and the responses to this request for additional information.

NRC RAI 1-2

Clarify if the HI-TRAC 100D has been changed through the change authority of 10 CFR 72.48. (TCB)

The supplemental response 8b indicates that the system used is based on the HI-STORM 100D "as licensed by the NRC" with modification to the lids. It is not clear if this configuration includes other configuration changes not directly licensed by NRC. Several portions of the amendment application refer to the HI-TRAC 100D as the licensing basis, in part, for evaluating the structural and confinement integrity of the wet transfer system.

This information is needed for the NRC staff's review to ensure compliance with the criteria contained in General Design Criterion (GDC) 1 and 61.

Response to RAI 1-2

The original HI-TRAC 100 transfer cask design, which included a pool lid and a separate transfer lid, was approved by the NRC in the initial Certificate of Compliance for HI-STORM 100 Dry Storage System (72-1014). Design changes were made to the HI-TRAC 100 model to create the HI-TRAC 100D transfer cask. The most significant of these changes was to eliminate the transfer lid from the design and use a separate component – a "mating device" - to facilitate removal of the pool lid and transfer of the loaded Multi-Purpose Canister from the transfer cask to the storage overpack. These design changes were evaluated and implemented under Holtec 10 CFR 72.48 #670. Holtec determined through their 72.48 evaluation that these design changes could be made under the change authority of 10 CFR 72.48 without prior NRC approval. In accordance with 10 CFR 72.48 a report containing a brief description of these changes and a summary of the associated evaluations has been submitted to the NRC (ML 060110213). As such, the HI-TRAC 100D licensing basis is a combination of the NRC approved HI-TRAC 100 design and changes not directly licensed by the NRC but evaluated and implemented under 10 CFR 72.48. The Licensing Report (HI-2094289) has been revised to clearly describe the HI-TRAC 100D licensing basis. The HI-TRAC 100D transfer casks have been used in NRC inspected dry storage training runs and in actual dry storage campaigns.

The HI-TRAC 100D used under Entergy's Part 72 general license to move spent fuel into dry storage from the IP-2 spent fuel pool remains the same design for that function. For the inter-unit transfer operation, the HI-TRAC 100D will be temporarily fitted with two unique pieces of equipment for each inter-unit fuel transfer campaign. The temporary equipment used with the HI-TRAC 100D for inter-unit fuel transfer will be a new bolted top lid and lid seals (depicted on Holtec drawing 6571) and a bolted bottom missile shield (BMS) (depicted on Holtec drawing 7176). The IP2 HI-TRAC 100D will be modified temporarily for each inter-unit fuel transfer campaign. The seal in the pool lid will be replaced with a fresh seal prior to each inter-unit fuel transfer campaign. The replacement of the pool lid seal and the installation of the BMS will be performed when the HI-TRAC transfer cask is empty, ensuring minimal dose to the operators. The approval of this configuration is being requested as part of this LAR.

The required temporary modifications to the HI-TRAC 100D for the fuel transfer campaign will not be detrimental to the future use of the HI-TRAC 100D for IPEC's dry storage campaigns. After the inter-unit fuel transfer campaign the HI-TRAC 100D will be returned to its licensed condition as approved for dry storage under CoC 72-1014. This includes removing the BMS and removing the solid HI-TRAC 100D top lid. The two top lids for the HI-TRAC 100D are easily

differentiated from one another. The lid used for dry storage campaigns has a large circular opening in it and the new lid for the inter-unit fuel transfer campaigns is solid.

Some of the spent fuel storage-related analyses for the HI-TRAC 100D described in this LAR were not specifically re-performed for inter-unit transfer operations because the analyses were unaffected by the temporary equipment proposed for use during the inter-unit transfer. These analyses were already reviewed and approved by the NRC as part of the certification of the HI-STORM 100 System under 10 CFR 72. The analyses performed for normal lifting and handling (i.e., structural qualification of the lifting trunnions and pool lid) as well as the tornado missile analysis are types of analyses already performed for the HI-TRAC 100D in the HI-STORM 100 FSAR. This analysis is the same when using the HI-TRAC 100D for dry storage campaigns or for inter-unit fuel transfer campaigns. In the cases where the analyses are equivalent and support the inter-unit fuel transfer, the licensing report references the analyses reported in the HI-STORM 100 System Final Safety Analysis Report (FSAR).

Any additional analysis for the inter-unit fuel transfer campaign that is unique to the HI-TRAC 100D in its temporary configuration is performed and documented in the licensing report (HI-2094289). The HI-TRAC 100D non-mechanistic tip-over analysis, the analysis of the solid top lid, the 6" drop, and the stability of the HI-TRAC 100D in a free-standing configuration are analyzed as part of this LAR and reported in Chapter 6 of the licensing report.

NRC RAI 1-3

Clarify the water level in the HI-TRAC cask cavity with the STC present. (CSDAB)

Descriptions of the annulus water level in the loaded HI-TRAC are not consistent in the inter-unit transfer report (the report). Chapter 1 of the report indicates the water level will be 10 inches below the transfer cask lid. The shielding model is consistent with this description; however, the Operations Chapter of the same report indicates that the transfer cask is filled so that the water level will be 3 inches below the top of the STC flange. Based on the dimensions provided in the report drawings, this water level means there is an air gap of more than 18 inches. This water is relied upon for various functions (e.g., shielding), and the application evaluations should appropriately account for the correct level of the annulus water.

This information is needed to confirm compliance with 10 CFR 50.90 and 50.34a(c) and the intent of 10 CFR 72.104 and 72.126(a).

Response to RAI 1-3

The initial water level in the HI-TRAC cavity prior to HI-TRAC top lid installation will be maintained within 1" of the top of the STC Lid. Chapter 1 and Chapter 10 have been revised to be consistent throughout with this requirement. The thermal analysis is also consistent with this operational requirement. For shielding analysis it is assumed that the HI-TRAC has a 9.25 inch tall air gap under the lid. The inner cavity of the HI-TRAC is 191.25 inches so the shielding analysis uses a height of 182 inches of water in the HI-TRAC. The top of the STC lid is at an elevation of 181.8125 inches from the bottom of the HI-TRAC (176.875 inches to the top of the STC flange and 4.9375 inches from the top of the flange to the top of the lid). If the water level will be maintained no more than 1 inch below that (180.8125 inches), the difference in the water level is ~1 inch which has a very small effect on the dose rate calculations. This minor difference in water level in the HI-TRAC shielding analysis is compensated by the assumption

that the STC has a 13 inch tall air gap on top of the fuel basket instead of the possible maximum of 9.5 inches.

NRC RAI 1-4

Provide clarification regarding the STC special lifting device and attachment (refer to page 1-7)(SMMB).

Section 1.3.1 states that "The STC has two lift points which will attach to the overhead cranes at IP3 and IP2 through the STC lid and a lifting device. The STC lifting points are designed in accordance with NUREG-0612 [C.A] for critical loads. The lid attaches using threaded studs and nuts."

Figures 1.4.6, 1.4.7, 1.4.10, 1.4.11, 1.4.13 show that a below-the-hook special lifting device is attached to the STC using 4 threaded studs and nuts. It appears that a "single" load path, through the two STC trunnions, is used to support the loaded STC.

Clarify the second paragraph description in Subsection 1.3.1 and revise, as appropriate, the Item iii summary of the evaluation criteria for the STC lifting points, including the threaded stud engagement and STC lift trunnions for critical loads.

This information is required by the staff to assess compliance with GDC-1, GDC-2, GDC-4, GDC-61. There is guidance in NUREG-0800 15.7.5, RG 1.183, NUREG-0612 5.1.6,; NUREG-0800 9.1.5; NUREG-0612 (Appendix C); NUREG-0554; ASME NOG-1 (2004), and 10 CFR 71.122.

Response to RAI 1-4

The loaded STC is lifted using two special lifting devices: the STC lift lock and the STC lifting device (2 assemblies required). The STC lift lock is attached to the top center of the STC lid using 4 bolts, and it serves as the attachment point for the overhead cranes at IP3 and IP2. The pair of STC lifting devices are also bolted to the top surface of the STC lid at opposite locations on the lid perimeter. Each STC lifting device assembly has a pneumatically controlled lift arm that hangs below the STC lid and connects to an STC lifting trunnion. Thus, during a lift of a loaded STC, the load travels through the STC body to the STC lifting trunnions, from the STC lifting trunnions to the STC lifting devices, from the STC lifting devices to the STC lid, from the STC lid to the STC lift lock, and finally from the STC lift lock to the overhead crane. Therefore, as noted in the RAI, a single load path, through the two STC trunnions, is used to support the loaded STC.

Because there is a single load path, the special lifting devices (i.e., STC lift lock and STC lifting device) are designed to meet the increased safety factors of ANSI N14.6 in accordance with NUREG-0612, Section 5.1.6(1)(a), and the interfacing lift points on the STC (i.e., threaded bolt holes and STC lifting trunnions) are designed to meet the stress limits of NUREG-0612, Section 5.1.6(3).

In accordance with the above, Section 1.3.1 of Holtec report HI-2094289 has been revised to clarify the STC special lifting devices and their attachment points as follows.

The second and third paragraphs of Subsection 1.3.1 now read:

"The loaded STC is lifted using two special lifting devices: the STC lift lock and the STC lifting device (2 assemblies required). The STC lift lock is attached to the top center of the STC lid using 4 bolts, and it serves as the attachment point for the overhead cranes at IP3 and IP2 (see Figure 1.4.3). The pair of STC lifting devices are also bolted to the top surface of the STC lid at opposite locations on the lid perimeter. Each STC lifting device assembly has a hydraulically controlled lift arm that hangs below the STC lid and connects to an STC lifting trunnion (see Figure 1.4.6). Thus, during a lift of a loaded STC, the load travels through the STC body to the STC lifting trunnions, from the STC lifting trunnions to the STC lifting devices, from the STC lifting devices to the STC lid, from the STC lid to the STC lift lock, and finally from the STC lift lock to the overhead crane.

The special lifting devices (i.e., STC lift lock and STC lifting device) are designed to meet the increased safety factors of ANSI N14.6 [B.S]. Meanwhile, the interfacing lift points on the STC (i.e., threaded bolt holes and STC lifting trunnions) are designed to meet the stress limits of NUREG-0612 [C.A].The STC has two lift points which will attach to the overhead cranes at IP-3 and IP-2 through the STC lid and a lifting device. The STC lifting points are designed in accordance with NUREG-0612 [C.A] for critical loads. The lid attaches using threaded studs and nuts."

CHAPTER 3 – PRINCIPAL DESIGN CRITERIA AND APPLICABLE ACCIDENTS

NRC RAI 3-1

Revise the engineering drawings to include the dimensions of seals and sealing surfaces, as well as surface finish specifications. Specify the selection criteria used to determine that the seal sizing is adequate for the service conditions and accident events considered in the safety analyses report. (TCB)

These characteristics are important to assure the seal will perform as intended during operations and accident events.

This information is needed for the NRC staff's review to ensure compliance with the criteria contained in GDC 61.

Response to RAI 3-1

Licensing drawing 6103 Sheet 4 has been revised to include the critical characteristic dimensions of the STC closure joint and seals. The seal configuration shown on the drawing is identical with respect to groove cross section, seal cross section, surface finish, and application of critical characteristics to that used in the licensed HI-STAR 60 transport cask (Docket number 71-9336, Holtec Report number HI-2073710, Subsection 2.2.1.1.6). Shop helium and hydrostatic tests on the manufactured HI-STAR 60 casks have shown the efficacy of the gasket material and the seal configuration (controlled compression joint described in the attached Holtec Position Paper DS-337, Attachment C).

Table 8.2.2 in the licensing report has been added and provides the critical characteristics of the seal material. These critical characteristics were chosen to meet the demands on seals in the STC.

The use of seals that meet the dimensional requirements set forth in the drawings and that meet the critical characteristics defined in Table 8.2.2 provides the assurance that the bolted joint will

perform its intended function under all service conditions attendant to inter-unit transfer operations.

NRC RAI 3-2

Perform tip-over analyses of the HI-TRAC cask with the STC inside to demonstrate the potential consequences of this event. (TCB)

The analyses can be based on a non-mechanistic tipover over the lower corner onto a receiving surface (which bounds the characteristics of the haul path) from a position of balance, with no initial velocity. The analyses should also address confinement integrity, thermal-hydraulic response, gaseous releases from fuel rods, which also affect the internal pressure, and variations in external dose rate and effects on STC emissions during such an event. Although the applicant has identified the crane, airpad, and vertical cask transport systems as components that preclude tipover, analyses are needed to provide defense-in-depth of the safety of the cask transfer system. Additional guidance on acceptable methods of tip-over analyses is provided in NUREG-1536.

If the assessment demonstrates the STC cannot maintain confinement under such an event, the STC should be redesigned such that confinement is maintained. The consequence assessment will provide insights on the level of confidence (including rigor of license condition design controls and operational controls) that is needed to assure that tipover will be precluded (i.e. low likelihood), as currently maintained by the applicant.

This information is needed to demonstrate that the system can withstand the worst-case loads and successfully preclude an unacceptable release of radioactive materials to the environment, in compliance with GDC 61.

Response to RAI 3-2

The kinematic stability of the HI-TRAC transfer cask inside the Part 50 structure and on the haul path (while being moved by the vertical cask transporter) has been demonstrated under extreme environmental phenomena including the applicable earthquakes. However, as a defense-in-depth measure, a non-mechanistic tip-over analysis of the loaded transfer cask has been performed to demonstrate that the margin of safety engineered in the transfer system will be maintained above acceptable limits. This preservation of the safety margin means that the following criteria are met:

1. The maximum deceleration sustained by the stored fuel assemblies is below the threshold value that may cause physical damage to them (and possibly altering their performance characteristics). In quantitative terms, the maximum lateral deceleration experienced by the fuel (L_{max}) shall be less than 84 g's. This fuel assembly deceleration limit is adopted from an earlier LLNL publication [B] for the Westinghouse PWR 15 x 15 fuel, and it is also referenced in the HI-STORM 100 FSAR [E]. The maximum axial deceleration experienced by the fuel (a_{max}) is limited to the permissible value of 60 g's from the HI-STAR SAR [D]. Further, a joint investigation effort by PNNL and USNRC [A] also determined that fuel remains structurally intact under a cask deceleration of 60 g's during an axial drop condition.

2. The maximum lateral deceleration experienced by the STC less than 60 g's consistent with the HI-STAR SAR [D]. Limiting the maximum lateral deceleration sustained by the STC below the threshold limit of 60 g's ensures that ASME section III subsection ND [F] stress limits

for the STC body are met. This deceleration limit is justified because the STC fuel basket has a similar prismatic cell construct and cross-section as the HI-STAR fuel basket. Moreover, the gaps between the STC fuel basket and the STC inner shell, and between the STC outer shell and HI-TRAC inner shell, are small and comparable (same order of magnitude) to the HI-STAR cask.

3. The STC closure joint seals remain compressed and the stresses in the STC closure bolts are below the stress limits specified by ASME section III subsection ND [F] subsequent to the tip-over event. Further, the STC does not suffer significant ovalization affecting its removal from the HI-TRAC.

Compliance to the acceptance criteria 2 and 3 ensures that the primary containment integrity (STC integrity) is maintained.

4. The secondary containment of radionuclides provided by the HI-TRAC transfer cask remains unimpaired. All ASME Code, Section III, Subsection ND pressure vessel stress limits [F] are met for the HI-TRAC body and lid bolts. Further, the HI-TRAC lid gasket will not unload.

5. There will be no significant loss of shielding in the HI-TRAC transfer cask due to the event. There will be deformations of the water jacket with a possible loss of water which is considered and analyzed in the shielding analysis as an accident condition (Table 7.4.5).

6. The temperature of the spent nuclear fuel and the STC internal pressure will remain within their respective design limits. The temperature of the fuel cladding remains below 570°C (SFST ISG-11 Rev 3 limit for accident condition) and the STC internal pressure remains below the STC accident pressure limit (Table 3.2.1).

7. The fuel inside the STC remains in a subcritical configuration. Because the relative fuel assembly positions and basket/neutron absorber structure remain as they were assumed to be in the criticality analysis, the k_{eff} of the system remains as it was computed to be for normal conditions.

Compliance with all of the acceptance limits stated above ensures that the confinement provided by the STC will not be breached, and the integrity of the fuel will be maintained indicating no excessive release of gases affecting the STC internal pressure or the external dose rates.

To enable the transfer cask to meet the above set of structural criteria, an internal impact limiter has been incorporated in the design. This impact limiter, shown in licensing drawing 7591, consists of an assemblage of aluminum tubes arranged in a weldment configured to occupy the annular space between the STC and the HI-TRAC cylindrical cavity and sized to center the STC inside the HI-TRAC. The thickness of the aluminum tubes was established by iterative tip-over simulations on LS-DYNA.

Figures 1A and 1B show the two limiting configurations considered for the Tip-over analysis. The details of the analysis and corresponding results are presented in Chapter 6, Section 6.2.8.

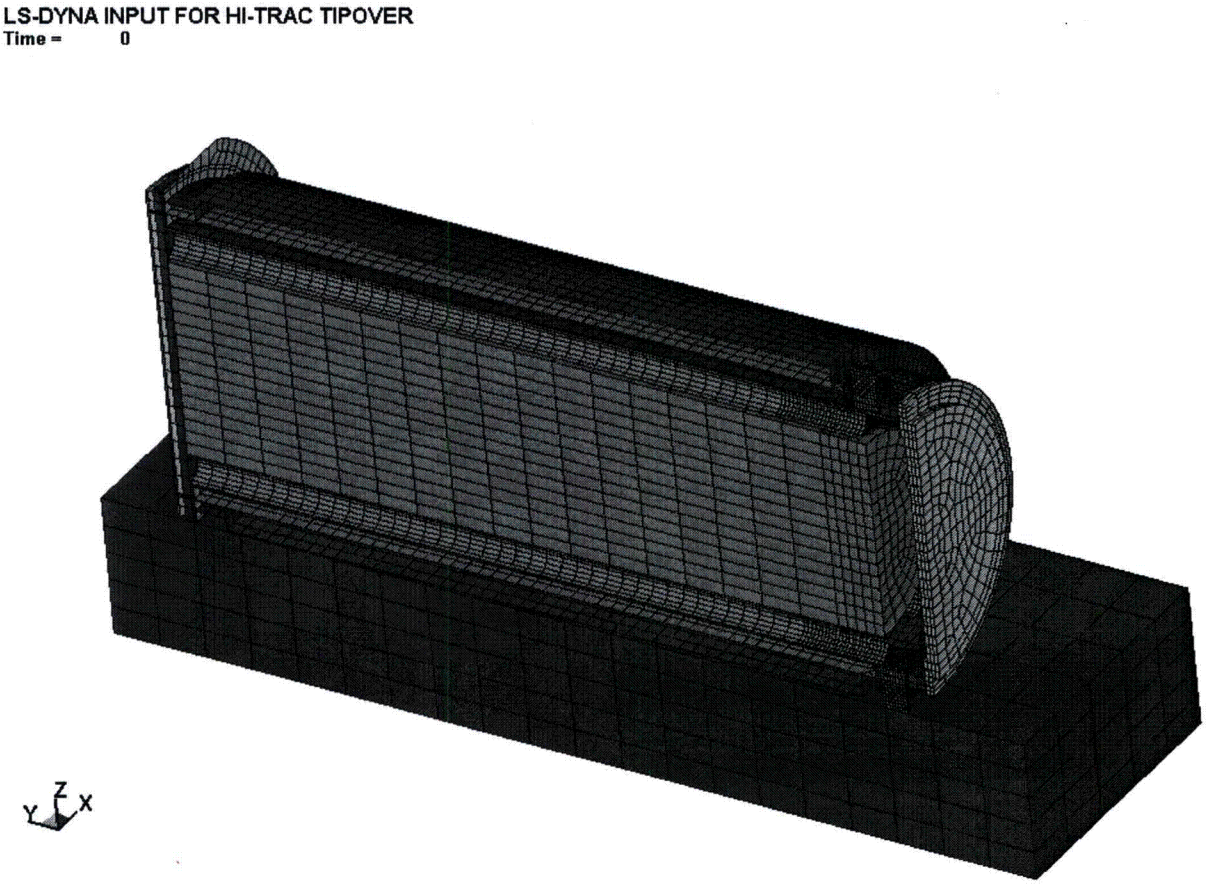

Figure 1A: Model Set-up for Tip-over Analysis – Impact Orientation 1

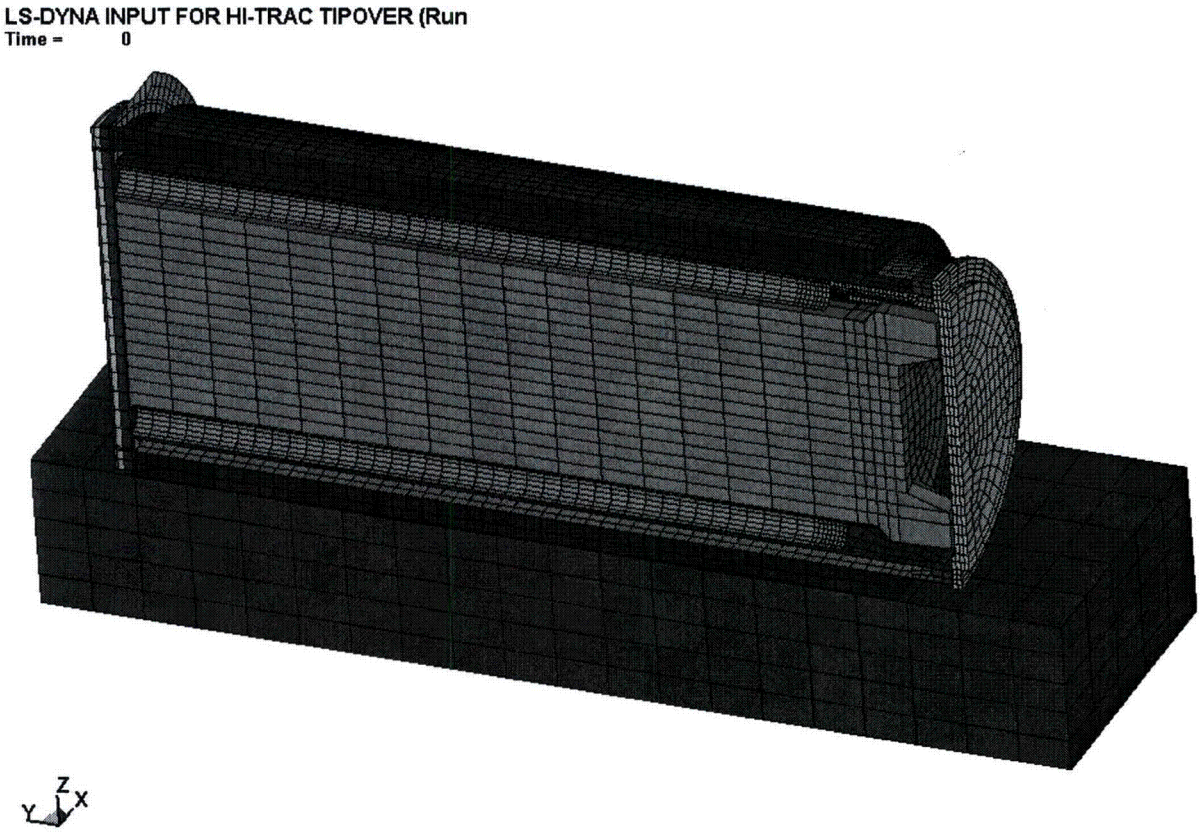

Figure 1B: HI-TRAC LS-DYNA Tipover Model – Impact Orientation 2

NRC RAI 3-3

Analysis of Accidents (SBPB)

In accordance with 10 CFR 50.90 and 10 CFR 50.34(b)(4), the application for a license to support fuel transfer shall include an analysis and evaluation of the design and performance of structures, systems, and components of the facility with the objective of assessing the risk to public health and safety resulting from operation of the facility. Furthermore, the evaluation shall include a determination of the margins of safety during normal operations and transient conditions anticipated during the life of the facility, and the adequacy of structures, systems, and components provided for the prevention of accidents and the mitigation of the consequences of accidents. Regulatory Guide 1.70, "Standard Format and Content of Safety Analysis Reports for Nuclear Power Plants, LWR Edition," contains guidance on the evaluation of postulated accidents. This guidance states that the effects of anticipated process disturbances and postulated component failures should be examined to determine their consequences and to

evaluate the capability built into the plant to control or accommodate such failures and situations (or to identify the limitations of expected performance).

GDC 61 of Appendix A to 10 CFR Part 50 specifies that the fuel storage and handling systems shall be designed to prevent significant reduction in fuel storage coolant inventory under accident conditions. In addition, GDC 63 specifies that appropriate systems shall be provided in fuel storage and radioactive waste systems and associated handling areas (1) to detect conditions that may result in loss of residual heat removal capability and excessive radiation levels and (2) to initiate appropriate safety actions.

Table 1.2, "Failure Modes and Effects Analysis," and Table 1.3, "Accident/Initiating Events and the Resultant Effects," in Attachment 1 to the supplemental letter dated September 28, 2009, provided analysis of various equipment failures and initiating events. The potential failure modes presented in Table 1.2 were described as being either:

i. ruled out by defense-in-depth operational measures, or
ii. detected and corrected before the loaded cask leaves the Part 50 structure.

Consequently, with the exception of a misloaded fuel assembly, the consequences of accidents listed in Table 1.3 were not evaluated. Instead, operational measures were credited to prevent or provide early detection and correction of conditions beyond design bounds, and potential accidents resulting from improper performance of operational measures were not addressed.

The NRC staff has little confidence that essentially concurrent operating measures would rule-out these events because operating experience indicates that omission or improper performance of one or more concurrent procedurally-directed operational measures has commonly occurred. Accordingly, provide analyses demonstrating the design and operating measures are sufficiently robust to prevent a significant reduction in coolant inventory under conditions that could result from anticipated omission(s) or improper performance, such as establishment of an inadequate HI-TRAC annulus water inventory, failure to add any water to the HI-TRAC annulus, and failure to establish any air gap in either the STC or the HI-TRAC. Consider the following examples of potential approaches:

- Provide a human reliability analysis consistent with the guidelines of Regulatory Position 1.2 of Regulatory Guide 1.200, "An Approach for Determining the Technical Adequacy of Probabilistic Risk Assessment Results for Risk-Informed Activities," that demonstrates a very low frequency (e.g., less than 1 in 1 million operating years) of omission(s) or improper performance of actions that could result in a significant reduction in coolant inventory.
- Provide thermal-hydraulic analyses demonstrating that omissions or improper performance of critical actions would not result in a significant reduction in coolant inventory.
- Modify the design of the HI-TRAC and/or STC to include instrumentation that would, independent from the initial establishment of conditions in the HI-TRAC and STC, ensure appropriate safety actions would be implemented to preserve adequate coolant inventory and residual heat removal in the event of omissions or inadequate operator performance that failed to establish proper initial conditions.
- Modify the design of the HI-TRAC and/or STC to include design features that inherently protect against conditions that could result in a significant reduction in coolant inventory or loss of residual heat removal (e.g., use of dished heads that inherently provide the

necessary air space for overpressure protection when installed and provide for enhanced heat transfer between the STC and HI-TRAC). Provide necessary supporting analyses for the design change addressing thermal-hydraulic, shielding, and mechanical protection issues.

Response to RAI 3-3

In order to address Staff's concern with respect to occurrence of multiple human errors and the amount of water in the HI-TRAC/STC assemblage, several physical changes as well as changes in the operation of the system are proposed to preclude such events, as discussed in further detail below. This includes adding specific limiting conditions of operation and associated surveillance requirements and design features to the proposed TS. These additional requirements along with modifications to the design make the inter-unit fuel transfer equipment able to withstand the postulated failure mechanisms and accident events described in Chapter 1 of the licensing report with less dependence on procedural compliance and human performance. In addition, analyses of various hypothetical conditions have been performed to show that even under extreme conditions the equipment will not exceed its design limits and the fuel cladding will not be compromised.

The licensing report provides the results of the analyses that demonstrate the STC/HI-TRAC assemblage design is sufficiently robust to prevent any reduction in coolant inventory under all conditions, specifically the extreme accident condition of a non-mechanistic tipover. The seals in the HI-TRAC and STC, as well as the equipment pressure boundaries, are shown to remain intact during this postulated event; precluding a loss of water during the transfer. The thermal analysis of the tipover event, with the HI-TRAC and STC in the horizontal position, shows that the fuel cladding temperature will remain below the limits in SFST ISG-11 Rev. 3 and that the internal pressures of the STC and HI-TRAC remain below their respective accident design basis limits.

The thermal analysis concludes that if the assemblage was without any water in the STC or HI-TRAC annulus space, the fuel cladding temperature will remain below the limit of 400°C in SFST ISG-11 Rev. 3. If no water was present in the STC or HI-TRAC this would be detected during the required dose rate surveillance performed prior to the HI-TRAC being moved from the IP3 fuel handling building.

A new requirement will serve to detect if the heat load in the STC is above the design basis. After the STC lid is sealed, pressure gauges will be attached to the STC vent and drain ports. A pressure rise limit during 24 hours surveillance time for normal heat load conditions with the appropriate amount of vapor space has been established by analysis. If the pressure rise in the STC cavity exceeds the limit, the STC will be vented. Subsequently, the water level in the STC and the contents of the STC will be verified. These requirements will be included as specific limiting conditions of operation and associated surveillance requirements or design features in the proposed TS and will ensure the STC has been loaded properly and the assemblage will not leave the IP3 Fuel Handling Building without having sufficient water volume and vapor space in the STC.

In accordance with the proposed TS the water level in the HI-TRAC annulus space will also be visually verified and independently verified before the HI-TRAC top lid is installed to ensure that the correct amount of water is in the annulus.

The postulated failure mechanisms and accident conditions are described in Chapter 1 of the licensing report, Tables 1.1.3 and 1.1.4, and the analysis in the licensing report supports the conclusions drawn in these tables. In summary, independent checks, mandated by surveillance requirements will be in place during operations to ensure remediation of anomalous indications prior to the fuel transfer if a human error were to occur. The design is robust enough to handle accident and non-mechanistic conditions. The design and operational changes provide a deterministic, not probabilistic, conclusion that the transfer system will not pose a risk to public health and safety even under the most adverse combinations of human errors or environmental conditions.

NRC RAI 3-4

Justify the tornado missile event for the HI-STORM 100 system, as bounding for the IP Fuel Transfer (refer to Table 1.3 in Entergy's Response with Supplemental Information (RSI), dated September 28, 2009.)(SMMB).

Staff notes that the applicant bounds the loaded STC and HI-TRAC missile events from the HI-STORM 100 FSAR and NRC Safety Evaluation Reports as indicated in paragraph (b)(3) of Revision 7 in the HI-STORM 100 10 CFR 72.212 Evaluation Report. However, the original MPC32 and HI-TRAC did not have a large annulus filled with water.

The intermediate missile strike considered in the HI-STORM FSAR (Revision 4 of Report HI-2002444, Section 3.4.8.2.1) will penetrate through the Outer Transfer Lid Door. Consider the new configuration of the STC/HI-TRAC system compared to the MPC/HI-TRAC system and the implication of a breach of the lid door.

Staff notes that the applicant considers that, "ensuring that the annulus water is not lost is a central objective in the system design," as indicated in RSI response 1.b. Analyze the effect on an immobilized STC/HI-TRAC system with a breached outer transfer lid door, and the consequent loss of annulus water if the STC is immobilized outdoors for 30 days due to a transport problem.

This information is required by the staff to assess compliance with GDC-61 and the intent of 10 CFR 72.104, 72.122.

Response to RAI 3-4

HI-STORM 100 FSAR (Revision 4 of Report HI-2002444, Section 3.4.8.2.1) indicates an intermediate tornado missile strike will penetrate through the outer transfer lid door of the base HI-TRAC 100 transfer cask design. Note that this does not indicate that the intermediate missile penetrates through the entire thickness of the transfer lid, only the outer transfer lid door. However, the HI-TRAC 100D used at IPEC does not employ a transfer lid. Instead, the HI-TRAC 100D has a pool lid which performs a dual function in the HI-TRAC 100D design in the dry storage application (see the response to RAI 1-2). Therefore, the missile analysis referred to in this RAI does not apply to the HI-TRAC 100D design.

During the inter-unit fuel transfer, the HI-TRAC 100D will be equipped with the pool lid as indicated on Holtec drawing 4128 Sheet 4. Unlike dry storage cask loading operations, the pool lid remains in place during the entire inter-unit fuel transfer campaign.

The following statement from Section 3.4.8.2.1 of the HI-STORM 100 System FSAR (Revision 4) indicates the penetration depth of the intermediate missile strike on the HI-TRAC pool lid:

> "Based on the above results, the intermediate missile will penetrate the ½" thick bottom plate of the HI-TRAC 100D pool lid. However, the lead and the pool lid top plate will absorb any residual energy remaining after penetration of the bottom plate."

To clarify this statement, the pool lid as depicted on Sheet 1 of Holtec drawing 4128 (excerpted in Figure 3.4-1 below) is made of three layers: 1) the "pool lid bottom" made of 0.5 inch thick SA 516, Grade 70 steel plate, 2) a 1.5 inch thick lead plate, and 3) the "pool lid top" made of 2.0 inch thick SA 516, Grade 70 steel plate. The intermediate tornado missile analysis shows that the missile penetrates the pool lid bottom, but it does not penetrate the lead plate and pool lid top. Therefore, a breach of the HI-TRAC 100D pressure boundary due to a tornado missile strike on the pool lid, resulting in a loss of annulus water, will not occur.

It is also important to note that the HI-TRAC 100D when used for the inter-unit transfer, will be equipped with a bottom missle shield (BMS- drawing 7161). The BMS is designed to protect the pool lid flange and lid bolted connection during a tornado missile event. In addition, the BMS will also protect the HI-TRAC 100D drain which will be plugged during the inter-unit transfer. Also, during transfer operations, the orientation of the HI-TRAC 100D and the height of the pool lid from the ground makes a direct missile strike on the pool lid bottom highly unlikely.

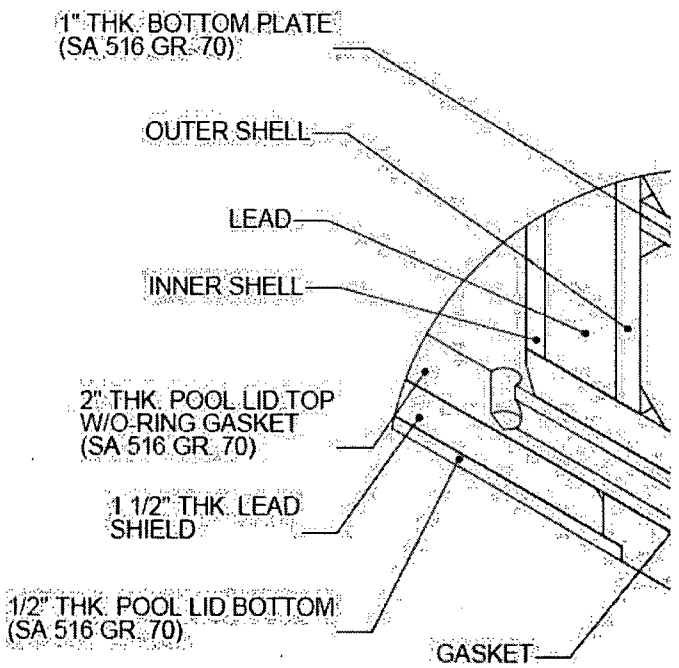

Figure 3.4-1

References cited in responses to Chapter 3 RAIs:

A. PVP 2004-2804, "Spent Nuclear Fuel Structural Response When Subject to an End Drop Accident".

B. LLNL Report UCID-21246, Dynamic Impact Effects on Spent Fuel Assemblies, October 20, 1987, Ramsey Chun, Monika Witte and Martin Schwartz.

C. Holtec International Dwg. No. 7591.

D. HI-STAR 100 FSAR, Revision 3 Docket No. 72-1008 and HI-STAR 100 SAR, Revision 13 Docket No. 71-9261.

E. HI-2002444, Revision 7, "Final Safety Analysis Report for the HI-STORM 100 Cask System", USNRC Docket 72-1014

F. ASME Boiler and Pressure Vessel Code, Section III, Division 1, Subsection ND – Class 3 Components, 2004.

CHAPTER 4 - CRITICALITY EVALUATION (SRXB and CSDAB)

An introductory response is provided to the NRC's questions on criticality followed by responses to each individual question.

In order to address the criticality related RAIs in a timely and comprehensive manner a revised burnup credit methodology has been used for the criticality calculations. The revised methodology is based on the more conservative approach taken for transportation casks under 10CFR71 as described in Chapter 4 of the licensing report.

As a result of the revised approach, a number of RAIs are no longer directly applicable to the revised Chapter. In those cases, no discussions on the RAI in the context of the original Chapter and methodology are provided. However, an explanation is provided as to how the issue is handled in revised Chapter 4, as appropriate and applicable.

CASMO and Uncertainties:

A number of the RAIs are related to the use of CASMO to determine reactivity differences that are then used as uncertainties in the calculation of the final maximum k_{eff} values. The revised methodology uses a different approach in using CASMO and in addressing uncertainties. To avoid excessive duplication in the RAI responses, the principal issues and changes made are discussed below, and are then referenced in the individual RAI responses as applicable.

In the initial analyses, 2-dimensional CASMO calculations were used to determine the reactivity effect of various tolerances and uncertainties, by calculating the difference in reactivity between models with different parameters. Those reactivity effects were then combined with other uncertainties (such as the bias uncertainty) and added to the k_{calc} from the 3-dimensional MCNP calculation when the maximum k_{eff} was determined. In the revised analyses, the use of CASMO and the use of reactivity uncertainties has changed as follows:

- CASMO is now only used to determine the isotopic composition of the fuel, and to provide qualitative (trend) reactivity calculations for temperature changes. CASMO is no longer used to determine quantitative reactivity (k_{inf}) values. All reactivity differences (e.g. effect of fuel and operating parameters) are performed in 3-dimensional models using MCNP. Therefore, other than a cell model to evaluate the trend of temperature changes, no CASMO models of the cells of the STC basket are used.
- Reactivity uncertainties are no longer used. Instead, the reactivity differences (calculated using MCNP) are used to determine the worst case condition, and this condition is then used in the design basis analysis.

Benchmarking:

A number of the RAIs are related to Benchmarking. The revised methodology uses an expanded set of Benchmarking calculations. To avoid excessive duplication in the RAI responses, the principal issues and the changes made are discussed below, and are then referenced in the individual RAI responses as applicable.

In the initial approach, criticality benchmarking was performed with fresh and MOX fuel, Commercial Reactor Criticals (CRCs) were used as validation for fission product worth, and uncertainties in the depletion calculations were addressed by the 5% depletion uncertainty per

[C]. The combined effect of those adjustments is about 0.0180 delta-k, although since it is combined with other uncertainties, the net effect is only around 0.0110 delta-k. The revised approach uses:

- Validation of the depletion code through benchmarking using chemical assays of spent fuel. For major actinides, a bias and bias uncertainty is developed and applied, for minor actinides and fission products, bounding correction factors are developed and applied for each isotope. Only isotopes validated by this approach are used in the analysis.
- Validation of the actinides in the criticality calculations through benchmarking of fresh fuel, MOX fuel and fuel with simulated spent fuel composition from the HTC experiments
- Validation of reactivity worth of fission products through commercial reactor criticals (CRCs)

The combined net effect of these changes is about 0.0660 delta-k, i.e. an additional margin on the order of 0.0500 delta-k compared to the initial approach. A small fraction of this margin is used to offset uncertainties that are not explicitely considered in the design basis calculations since they are difficult to quantify or difficult to model. Also, a portion of this margin would be available to cover any remaining gaps in the validations, although the comparisons between the relevant parameters of the STC and the parameters covered in the various validations indicate a good agreement, and statistical techniques are used that allow extrapolation where necessary.

NRC RAI 4-1

In HI-2084176 Table 5.7 the METAMIC Boron-10 (B-10) Areal Density (AD) is determined to be 0.032 gm/cm2. How does the STC surveillance program ensure the METAMIC B-10 Areal Density doesn't drop below this value? What are the STC surveillance program's acceptance criteria for the METAMIC B-10 AD? What are the tolerances associated with those acceptance criteria? How are those items covered in the STC criticality analysis?

Response to RAI 4-1

Please see response to RAI 8-6 in addition to the discussion below.

- The minimum B-10 AD is 0.031 gm/cm^2 per the licensing drawing. The minimum Areal Density is assured through the manufacturing process. Note that consistent with the 10CFR71 analysis approach, the minimum value of the Areal Density of 0.031 gm/cm^2 is used as the basis of the analysis, rather than the nominal value of 0.032 gm/cm^2 that was used previously. Consequently, no further uncertainties on the Areal Density are applied. However, a further reduction of this value by 10% is used consistent with the 10CFR71 analysis approach, in addition to the consideration for the surveillance testing discussed below.
- Based on testing results for Metamic, as documented in the Metamic Sourcebook, there is no mechanism for the B-10 in the material to drop below this minimum value. The surveillance program proposed would confirm via neutron attenuation measurement that no such degradation exists, or that any measured degradation is within the bounds of the criticality analysis.
- The surveillance program will be initiated using Metamic coupons that will be located in the STC. Coupons will be evaluated for their B-10 areal density before being placed into the STC, then on a regularly scheduled basis.
- The Areal Density of the coupons are acceptable if the measured areal density is within +-5 % of the initially measured areal density for the same coupon. This is based on a

measurement uncertainty of 2.5% specified for the individual measurements (see RAI 8.6 and Section 8.5.3.5 of the revised licensing report), which could result in a maximum difference of 5% between measured values even if the actual areal density remains constant.

- For the criticality analysis, the B-10 areal density is reduced by 5% to account for this measurement uncertainty, in addition to the reduction of 10% discussed above.

NRC RAI 4-2

HI-2094289 does not appear to consider items such as fuel rod storage baskets (FRSB) or 'dummy' fuel assemblies. Please identify how such items are modeled in the STC or are precluded from being placed in the STC.

Response to RAI 4-2

The permissible contents of the STC basket currently only includes intact fuel, as defined and specified in the proposed Appendix C to the Operating License TS for the STC. Items such as fuel rod storage baskets or dummy fuel assemblies are not permitted in the STC and are therefore not modeled in the analysis.

NRC RAI 4-3

HI-2084176 Section 7.1 addressed the reactivity effect of different fuel assembly types. Please provide the following information concerning the analysis of different fuel assembly types:

a) Table 5.1 describes the design basis fuel assembly. Provide the distance and tolerance from the bottom of the fuel assembly to the bottom of the active fuel. If this distance varies with fuel design, provide design-specific information.
b) Table 7.7 provides information concerning the reactivity effect of different fuel assembly types. However, it is not clear what is being presented in that table. Provide a fuller description of the information in that table; include the description of the simulations used to derive the table.

Response to RAI 4-3

a) The distance from the bottom of the fuel assembly to the bottom of the active fuel varies slightly between fuel designs, with a nominal value between 3.258" and 4.355", with no tolerance information available. Note that this distance is larger than the distance between the bottom of the Metamic panel and the bottom of the basket, which is 2.875" ± 3/16", i.e. a maximum 3.0625". A misalignment between the active region and the Metamic panel is therefore not expected. Consequently, there is no impact on the criticality evaluations.

b) In the revised analyses, the comparison of the different fuel types is performed using full 3-dimensional analyses of those assemblies in the STC basket. The comparison shows little difference between the fuel types based on the different dimensions, but fuel type 1 (Vantage, Upgraded) is selected as the design basis fuel since it also contains IFBA rods that can further increase the reactivity of the fuel. The description in Section 4.7.1.1 of the chapter that discusses those results (now located in Table 4.7.5 and 4.7.6) has been revised accordingly.

NRC RAI 4-4

Staff guidance is to use the most reactive fuel [C]. NUREG/CR-6665, "Review and Prioritization of Technical Issues Related to Burnup Credit for LWR Fuel," [D]) provides some discussion on the treatment of depletion analysis parameters that determine how the burnup was achieved. NUREG/CR-6665 is focused on criticality analysis in storage and transportation casks and should therefore be an appropriate reference for the licensee's STC. The basic premise is to select parameters that maximize the Doppler broadening/spectral hardening of the neutron field resulting in maximum ^{241}Pu production. NUREG/CR-6665 discusses six parameters affecting the depletion analysis: fuel temperature, moderator temperature, soluble boron, specific power, and operating history, fixed burnable poisons, and integral burnable poisons. While the mechanism for each is different, the effect is similar: Doppler broadening/spectral hardening of the neutron field resulting in maximum ^{241}Pu production. NUREG/CR-6665 provides an estimate of the reactivity worth of these parameters. With respect to the IP3 core operating parameters used in the depletion analysis, provide the following information:

a) HI-2084176 Table 5.2 provides the core operating parameters used for CASMO depletion calculations. Were analyses performed to show that these parameters are conservative and bounding?
   i) Note that consideration should be given to the full range of parameters experienced by all fuel currently stored and for fuel that will be stored in the future. Consider too that parameters that lead to spectral hardening and increased plutonium production also reduce depletion of thermal neutron absorbing fission products. It should not just be assumed that anything that hardens the spectrum is conservative.
b) IP3 UFSAR Table 3.2-4 indicates that the Cycle 1 Hot Channel had a core exit temperature of 635.7°F. IP3 UFSAR Table 3.2-4 also indicates that the Cycle 16 average core exit temperature was higher than that for Cycle 1, indicating that the Hot Channel for Cycle 16 would have had a higher core exit temperature that that used in the licensee's analysis. Identify a bounding hot channel core exit temperature and use that as the core operating temperature for the depletion portion of the analysis.
c) HI-2084176 Table 5.2 indicates a constant soluble boron concentration of 900 PPM was used during the CASMO depletion calculations. Provide the cycle average soluble boron concentration for current and past cycles.
d) For the remaining four parameters discussed in NUREG/CR-6665 provide the ranges of operating parameters affecting the CASMO depletion calculations and provide better justification for bounding values selected.
e) Describe how these parameters will be controlled for future cycles and actions to be taken if a future cycle deviates from the assumption that the parameters used in this analysis are limiting.

Response to RAI 4-4

In the revised analyses, parameters have been selected that assure that the most reactive fuel is considered. Specifically, the moderator temperature, the fuel temperature and the power density have been increased in comparison to the initial analyses, consideration of burnable poison has been expanded, and consideration for control rod insertions has been added. As for the studies on the fuel assembly type, those calculations are performed using full 3-dimensional models of the STC. Addressing the individual requests in detail:

a) In addition to establishing new parameters, studies were performed to show the effect of changes in those parameters. Specifically,
- Results in Table 4.7.16 show that out of the operating parameters shown in Table 4.5.2, only the moderator temperature has a significant effect on reactivity. Changing the other parameters has a small or even statistically insignificant effect. .
- Results in Table 4.7.6 show that the presence of IFBA rods increase reactivity, with or without the additional presence of absorber inserts such as WABAs.
- Results in Table 4.7.7 show that the combination of WABA and IFBA bounds all other burnable poison exposure, and minor CR insertion, whereas full CR insertion bounds full insertion of a Hafnium insert. Note that for assemblies that had a BPRA inserted during in-core operation, a cooling time of 10 years is used, since the last assembly that had such an insert was unloaded more than 10 years ago (see also response to item (e) below). All other calculations are performed for 5 years cooling time.

b) Recognizing the importance of the moderator temperature (see discussion above), a bounding hot channel temperature of 637.3 °F is used in the new analyses.

c) Cycle average soluble boron concentrations for current and past cycles are listed below

Cycle	Boron Concentration (ppm)	
	HFP ARO conditions at 0 MWD/MTU (BOC)	Cycle Average
1	1228	614
2	1320	660
3	1323	661.5
4	1350	675
5	1365	682.5
6	1400	700
7	1351	675.5
8	1632	816
9	1451	725.5
10	1394	697
11	1493	746.5
12	1556	778
13	1579	789.5
14	1365	682.5
15	1341	670.5
16	1260	630

The selected value of 900 ppm bounds all cycle average values. There are no plans to increase the cycle average soluble boron in the future.

d) See discussion for item a) above

e) These parameters will be controlled for future cycles as follows: If any of the parameters in future cycles is outside of the range of parameters evaluated here, in the non-conservative direction determined by the evaluations in item (a) above, including the special cooling time requirement for assemblies exposed to BPRAs, an evaluation will be performed to determine the combined effect of all six parameters for the respective fuel and/or cycle. If the evaluation indicates that fuel operated at those parameters may have a higher maximum multiplication factor than that assumed in the design basis analyses, then this fuel can not be loaded into the STC until calculations and acceptable content for the STC have been updated accordingly through the license amendment process. The following parameters will be reviewed on a cycle-by-cycle basis in accordance with Entergy Procedure EN-NF-105 ("Reload Process"):

Rated thermal power
Peaking Factors Fq and F-delta-H, per the Tech Specs and COLR
Average Reactor Coolant System Boron Concentration
Full Power T-Average
Peak pin burnup

NRC RAI 4-5

HI-2084176 Section 2, first paragraph discusses how the lumped fission products are validated. The method described is not "validation." The cross-code comparison utilizing the same cross-sections does not tell us anything about the potential composition and cross-section errors and associated biases introduced by the modeling of lumped fission products and use of lumped fission product cross sections. The "5% of the reactivity decrement" suggested by the Kopp memo does not cover modeling simplifications and approximations such as use of lumped fission products. Please provide the following information concerning the use of the lumped fission products:

a) What is the worth of the lumped fission products in the fuel storage racks?
b) What fission products are included in the lumped fission products?
c) What are the cross sections for each lumped fission product? What is the basis for the cross section for each lumped fission product? How do the cross sections of the lumped fission products respond to changes in temperature and spectral hardening?
d) What are the decay constants for each lumped fission product?
e) Are there any neutron absorbers represented in the lumped fission products? What are the cross sections for those neutron absorbers? What are the decay constants for those neutron absorbers?
f) Are there any neutron sources represented in the lumped fission products? What are the source terms? What are the decay constants for those neutron sources?
g) Assumption #4 states, "A conservative cooling time of 0 hours is used along with setting the xenon concentration to zero for all CASMO-4 calculations in the fuel basket models. No credit is therefore taken for the significant cooling time of the fuel assemblies." How does modeling of Lumped Fission Products affect this assumption?
h) Why is isotopic inventory at zero cooling time acceptable for the criticality calculations, given the fact that short-lived fission products will decay out in a few days to a few years?

Response to RAI 4-5

The revised analyses described in Chapter 4 of the licensing report credits only isotopes that are explicitly validated through isotopic benchmarking using chemical assays of spent fuel. Artificial isotopes such as lumped fission products are therefore no longer credited. Additionally, the revised analyses use a different cross section library for the depletion calculations, which has the option to consider a larger number of individual isotopes instead of lumped fission products.

NRC RAI 4-6

The text in Section 7.3, "Isotopic Compositions," describes modeling approximations related to calculation and use of burned fuel compositions. Provide additional detail in this section to clearly state the conditions used in the calculation of fuel compositions as a function of initial-enrichment and fuel burnup.

i) From the text in Section 7.3, it appears that assembly average compositions are used rather than pin-by-pin compositions. This minimizes the impact of reactivity control inserts such as WABA rods. Provide additional detail describing and justifying the use of modeling approximations associated with modeling burned fuel. Where appropriate, include biases and bias uncertainties associated with the modeling simplifications and approximations.

Response to RAI 4-6

For the development of the 10CFR71 methodology that is now used for the STC, a study was performed to determine the potential effect of using pin-specific vs assembly average isotopic compositions, including cases with and without burnable poison or control rods in the guide tubes. The study showed that in all cases the results with pin-specific and assembly average isotopic compositions are statistically equivalent. Therefore, it is appropriate to perform all calculations with assembly average isotopic compositions. A discussion is provided that justifies why this study, performed for a spent fuel transport cask, is applicable to the STC. Please see Section 4.7.2.2 of the revised chapter for further discussions of this subject.

NRC RAI 4-7

Section 7.6 of Holtec Report HI-2084176 indicates CASMO-4 was used to calculate the reactivity uncertainties in Table 7.9.

a) Explain what modeling constructs were employed that allowed CASMO-4 to model the asymmetric STC storage cells and distributed axial burnup profiles of the depleted fuel assemblies.
b) Did these CASMO-4 model constructs affect the results?
c) Where appropriate, include biases and uncertainties associated with CASMO-4 model constructs.

Response to RAI 4-7

In the revised analyses, the use of CASMO and the use of reactivity uncertainties has changed substantially (see discussion titled "CASMO and Uncertainties" at the beginning of the RAI responses to Chapter 4). Therefore,

a) CASMO is no longer used to model the storage cells for quantative analyses;
b) Since CASMO is no longer used for such analyses, results are not affected by any modeling assumptions; and
c) No bias and uncertainties associated with using CASMO models are required.

NRC RAI 4-8

HI-2084176 Assumption # 2 indicates that minor structural components of the fuel assembly such as spacer grids are not modeled because they have a negligible effect on reactivity. Assumption #2 indicates there is a discussion of this in Section 7.9; however the staff could not find such a discussion in Section 7.9. Provide a justification for not modeling spacer grids.

Response to RAI 4-8

The revised analysis now contains a study (Section 4.7.9.3) on the effect of components such as spacer grids. The conclusion is that it is conservative to neglect those components, even at the level of soluble boron required for the accident conditions.

NRC RAI 4-9

HI-2084176 Assumption 7, Section 7.1 addressed the reactivity effect of fuel assembly reactivity control devices, including Hafnium Inserts. Please provide the following information regarding the reactivity control devices:

a) Provide justification for the way these reactivity control devices were modeled throughout fuel assembly life, both in the reactor during depletion simulations and in the STC during criticality calculations.
b) Section 7.1 provided a discussion of fuel assembly reactivity control devices. Confirm that integral (e.g. integral fuel burnable absorbers (IFBAs)) and non-integral (e.g., wet annular burnable absorbers (WABAs), rod cluster control assemblies (RCCAs), etc.) reactivity control devices are modeled during depletion and removed prior to restart in rack geometry. Verify that the reactivity control devices were removed from the model before the restart in the STC.
c) It appears that IFBA and WABA were not modeled during depletion as being present in the same assembly. Does some mechanical feature or technical specification prevent them from being in the same assembly? Provide justification for not modeling both in the same assembly.
d) It does not appear that depletion with control rods present was considered. Frequently, second- and third-cycle fuel is placed under control rods, some of which may be used to control reactor power. Thus, a realistic fuel depletion scenario could include first cycle depletion with burnable absorbers and second cycle depletion with partially inserted control rods. Some plants have also included part-length absorbers rods in some peripheral locations to reduce neutron flux to reactor vessel welds. In low-leakage loading patterns, these peripheral locations frequently hold fuel that is being used for a third cycle.
e) Tables 7.5 and 7.6 provide information concerning the reactivity effect of fuel assembly reactivity control devices. However, it is not clear what is being presented in those tables. Provide a fuller description of the information in those tables; include the description of the simulations used to derive the tables.

Response to RAI 4-9

Consideration of reactivity control devices have been completely revised for the new analyses, see Section 4.7.1.2, addressing all concerns listed in the RAI. Specifically:

a) Devices (and IFBA coatings) were considered during core operation, but for conservatism they are not considered in the STC.
b) Devices (and residual absorber in the IFBA coating) were removed in the models before restart, i.e. only the fuel composition was transfered from the depletion calculations to the criticality calculations in the STC. Fuel was always modeled with water-filled guide tubes in the calculations in the STC.
c) The concurrent presence of IFBA and WABAs in the same assembly is now considered, in addition to the concurrent presence of IFBA and BPRAs, see Section 4.7.1.2.2.2. The concurrent presence of IFBA and CRs or Hafnium has not been considered, with appropriate justification in Section 4.7.1.2.2.2.
d) Potential presence of control rods are now considered in a bounding manner, and a separate loading curve is generated for assemblies where control rod insertion could have an effect on reactivity
e) The presentation and discussion of results (Section 4.7.1.2, Table 4.7.6 and Table 4.7.7) has been enhanced for clarity.

NRC RAI 4-10

HI-2084176 Section 7.4 addresses uncertainty in depletion calculations. Please provide the following information regarding the reactivity control devices:

a) It is unclear where the Depletion Uncertainty in Table 7.1 comes from. Using the description in Section 7.4 and the information in Table 7.5, the staff did not calculate the same value. Provide the simulations used to derive the Depletion Uncertainty. Explain how they differ from the simulations used to derive Tables 7.5, 7.6, and 7.7.

Response to RAI 4-10

In the revised analyses, a different approach is used for consideration of depletion uncertainties, based on isotopic benchmarking using chemical assays of spent fuel samples. For the major actinides, a combined bias and bias uncertainty is derived from these benchmarking calculations, whereas for the minor actinides and fission products, bounding correction factors are applied for each isotope. Isotopes not validated through benchmarking are not credited in the analyses. See Appendix A to Chapter 4 for further details. The tables listed in the RAI no longer contain information about depletion uncertainties.

NRC RAI 4-11

During irradiation in light water reactors the fuel assemblies undergo physical changes associated with irradiation and residence time in an operating reactor. Some of those changes are clad thinning due to fuel rod growth, fuel densification, collapse of the pellet/cladding gas gap in the fuel rod, and crud build up on the outside surface of the fuel rod. In SFP criticality analyses, fuel has been modeled as fresh and clean fuel. As the fuel undergoes extended burnup and residence in an operating reactor modeling it as fresh and clean becomes even more of an approximation. There is no discussion of how these changes were addressed in HI-2084176. There is no basis in Reference [C] to suggest that the current guidance for the depletion uncertainty provides coverage of changes in fuel geometry during irradiation.

Uncertainty in k_{eff} due to random fuel geometry changes should be handled as variations in the parametric ranges of the analysis and included along with the other uncertainties. Variation in k_{eff} due to anticipated geometry changes during irradiation should be handled as a bias. The fuel geometry changes as it is irradiated in an operating reactor. Those physical changes include phenomena such as clad creep, clad thinning, pellet densification, and others. Confirm that the impacts of fuel geometry changes during irradiation are properly handled.

Response to RAI 4-11

Studies on various clad geometry changes are now presented (see Section 4.7.9.2). They show that the impact of such geometry changes on reactivity is negligible for this fuel and STC design.

NRC RAI 4-12

HI-2084176 Section 7.6 addresses uncertainties from manufacturing tolerances. Please provide the following information regarding the uncertainties from manufacturing tolerances:

a) Where the reactivity worth of an uncertainty is calculated using MCNP, the reactivity worth should also include allowance for the Monte Carlo uncertainty in the calculation of the reactivity worth. Revise the analysis to properly incorporate k_{eff} uncertainties calculated using MCNP.
b) Table 7.9 appears to be incomplete. It appears to be missing columns for two cases: 4.95 w/o ^{235}U with zero burnup and 600 PPM of soluble boron and 4.95 w/o ^{235}U with 40 GWD/MTU burnup and 600 PPM of soluble boron. Provide the information for those cases.
c) There is virtually no information provided about the computer simulations performed to obtain the data that was used to create Table 7.9. It isn't indicated which STC storage configuration the simulations considered. Provide a full description of the computer simulations performed in support of Table 7.9.
d) How were the manufacturing tolerances of integral (e.g. IFBA) and non-integral (e.g., WABA, WDR, RCCAs, etc.) reactivity control devices treated? Provide a justification for the treatment of the manufacturing tolerances of integral (e.g. IFBA) and non-integral (e.g., WABA, WDR, RCCAs, etc.) reactivity control devices.

Response to RAI 4-12

a) As discussed in the respose to RAI 4-7, the use of reactivity uncertainties has changed substantially in the revised methodology. Analyses now use worst case conditions instead of determining reactivity worth of uncertainty to include them in the design basis calculations. Reactivity differences are only calculated to determine trends. In this case, the uncertainty of the individual calculation need not be considered, other than to check if the trend is statistically significant. No further revisions of analyses are therefore required to address this request.

b) and c) Since analyses use worst case conditions instead of reactivity uncertaities, information previously listed in Table 7.9 is no longer required or provided.

d) No specific information on the tolerances of the integral and non-integral reactivity control devices is available. To determine the sensitivity of the reactivity effect of those devices to any tolerance, studies were performed where the density of the absorber is

increased by an arbitrary value of 20%. The studies show only a small effect of such an increase, barely exceeding the value that would be considered statistically insignificant. Nevertheless, the results of this study are used in the margin analyses to show that such uncertainties would be easily covered by the potentially large margin of the analyses. See Section 4.7.9.5 and Section 4.7.9.6 for further details.

NRC RAI 4-13

HI-2084176 Sections 7.7 and 7.9.1 discussed temperature and water density effects. Please provide the following information regarding the temperature and water density effects:

a) For the temperature bias clarify the source of the bias, the method by which the bias is calculated, and the justification for using CASMO-4 to estimate the bias. Confirm that the results shown in Table 7.8 reflect changes in both water density and temperature.
b) As with Table 7.9, Table 7.8 appears to be incomplete. It appears to be missing columns for two cases: 4.95 w/o ^{235}U with zero burnup and 600 PPM of soluble boron and 4.95 w/o ^{235}U with 40 GWD/MTU burnup and 600 PPM of soluble boron. Provide the information for those cases.
c) Were any sensitivity studies performed at low moderator densities corresponding to steam blankets or firefighting materials? If not perform the sensitivity studies to determine whether there is a reactivity concern at very low moderator densities.

Response to RAI 4-13

a) In the revised analysis, a different approach is used to account for temperature and water density effects: The design basis calculations are performed at a water density corresponding to the highest reactivity, which is 1.0 g/cm^3 based on sensitivity studies with variations in water density, all performed with the full 3-dimensional model in MCNP. Additionally, a sensitivity study with increased temperature and void content (CASMO) is performed to show that a temperature increase including boiling would result in a reduction of the reactivity. In this way no bias is determined with CASMO, only qualitative information indicating that reactivity is reduced with an increase in temperature. This CASMO study is performed for fresh and borated water to cover all water conditions of the normal and accident conditions.
b) Table 7.8 of HI-2084176 has been expanded to include various fuel conditions close to the loading curve and fresh fuel at various enrchments.
c) A study at low moderator density has been added and is discussed in Section 4.7.6. It shows that the reactivity decreases with decreasing water density.

NRC RAI 4-14

HI-2084176 Sections 7.8 discusses the calculation of maximum k_{eff} for normal conditions. Please provide the following information regarding the calculation of maximum k_{eff} for normal conditions:

a) Table 7.1 of Holtec Report HI-2084176 is a summation of the biases and uncertainties associated with a fuel assembly with 4.95 w/o enriched U235 and 38.0 GWD/MTU of burnup. That is one entry on Table 7.3. Provide a summation of the biases and uncertainties for the other entries on Table 7.3.

b) Table 7.1 is a summation of the biases and uncertainties associated with a fuel assembly with 4.95 w/o enriched ^{235}U with 38.0 GWD/MTU of burnup. The Reference k_{eff} in Table 7.1 is 0.9118. It is unclear how this value is derived. Tables 7.5, 7.6, and 7.7 indicate the 0.9118 will be greatly exceeded for 4.95 w/o enriched ^{235}U with 38.0 GWD/MTU of burnup. Provide the details of the computer simulations used to arrive at the Reference k_{eff} in Table 7.1. Compare and contrast those computer simulations with those used to produce Tables 7.5, 7.6, and 7.7. Provide this information for all the other entries on Table 7.3.

Response to RAI 4-14

a) For the revised analyses, Table 7.1 of HI-2084176 has been expanded showing the calculation of the maximum k_{eff} for various burnup and enrichment combinations consistent with the loading curve (without control rod insertion).
b) The previous analyses used both laterally and axially infinite CASMO models and full 3-dimensional MCNP models for criticality analyses, resulting in the differences indicated bewteen the tables presenting results for the two codes. For the revised analysis, all quantitative criticality analyses are performed with MCNP, ensuring consistency between tables (see also discussion titled "CASMO and Uncertainties" at the beginning of the RAI responses to Chapter 4).

NRC RAI 4-15

HI-2084176 Sections 7.9 discusses the abnormal and accident conditions. Please provide the following information regarding the abnormal and accident conditions:

a) Section 7.9.2 indicates that a drop event of the STC would only result in a negligible change in reactivity. Justify why a drop event need not consider the loss of borated moderator and replacement with unborated fresh water from the HI-TRAC annulus.
b) Table 7.11 of Holtec Report HI-2084176 is a summation of the biases and uncertainties associated with a fuel assembly with 4.95 w/o enriched U235 and 38.0 GWD/MTU of burnup with 600 PPM of soluble boron. That is one entry on Table 7.3. Provide a summation of the biases and uncertainties for the other entries on Table 7.3.
c) Table 7.11 is a summation of the biases and uncertainties associated with a fuel assembly with 4.95 w/o enriched ^{235}U with 38.0 GWD/MTU of burnup with 600 PPM of soluble boron. The Reference k_{eff} in Table 7.11 is 0.9189. It is unclear how this value is derived. Provide the details of the computer simulations used to arrive at the Reference k_{eff} in Table 7.11. Compare and contrast those computer simulations with those used to produce Tables 7.5, 7.6, and 7.7. Provide this information for all the other entries on Table 7.3.
d) Table 7.11 is a summation of the biases and uncertainties associated with a fuel assembly with 4.95 w/o enriched ^{235}U with 38.0 GWD/MTU of burnup with 600 PPM of soluble boron. The Depletion Uncertainty in Table 7.11 is 0.0067. It is unclear how this value is derived. Provide the details of the computer simulations used to arrive at the Depletion Uncertainty in Table 7.11. Compare and contrast those computer simulations with those used to produce the Depletion Uncertainty in Table 7.1. Provide this information for all the entries in Table 7.3.

Response to RAI 4-15

a) The STC is designed so that it remains sealed and filled with water under all normal and accident conditions. Nevertheless, to demonstrate the robusteness of the design and as

a defense in depth measure, the calculations for normal conditions are performed considering a loss of the borated water, i.e. the calculations are performed assuming unborated water in the STC. They show that the k-eff is below 0.95 even under that condition. Borated water is only credited for the fuel misload accident. So while a loss of borated water and replacement with fresh water would result in an increase in the actual reactivity, it would not result in an increase in the calculated reactivity.

b) The revised fuel misload accident analyses considers multiple misloads of mildly or substantially underburned assemblies instead of the misloading of a single fresh assembly as originally proposed. Selection of the analyzed cases is based on the inventory in the IP3 SFP and the new loading curve. See Section 4.7.8.2 for a detailed discussion.
c) See response to RAI 4-14 (b) for normal conditions (Table 7.1). The same is applicable to accident conditions (now in Table 4.7.14)
d) See response to RAI 4-10 for normal conditions (Table 7.1). The same is applicable to accident conditions (Table 4.7.14)

NRC RAI 4-16

It appears that the purpose of HI-2084176 Tables 7.5 and 7.6 is to produce an estimate for the bias introduced by not modeling the integral (e.g. IFBA) and non-integral (e.g., WABA, WDR, RCCAs, etc.) reactivity control devices during the depletion calculations. Since the storage racks do not take credit for the presence of integral and non-integral reactivity control devices, it would seem that these tables should show only the impact of the presence of integral and non-integral reactivity control devices, during the depletion calculations. All of the results should have been restarts in the rack geometry with integral and non-integral reactivity control devices removed. Consequently all "Ref." values and associated k_∞ values at zero burnup should have been the same. With respect to the modeling of the integral and non-integral reactivity control devices during the depletion calculations, provide the following information:

i) Describe the simulations that were performed to derive Tables 7.5 and 7.6, especially the modeling of the integral and non-integral reactivity control devices.
ii) Justify the modeling of the integral and non-integral reactivity control devices.

Response to RAI 4-16

Modeling of the integral and non-integral reactivity control devices has been changed significantly in the revised calculations. In the revised analyses, all criticality calculations are performed in 3-dimensional MCNP calculation of the STC, with fuel composition transfered from the depletion calculations. Therefore, conditions at zero burnup would always be identical between the cases with different integral and non-integral devices, although those cases at zero burnup are no longer presented since they are not representative of fuel on the loading curve. See also response to RAI 4-9 and Section 4.7.1.2 of the revised licensing report.

NRC RAI 4-17

HI-2084176 Section 7.9 discusses the analyses performed for abnormal and accident conditions. If the abnormal/accident condition results in an unborated k_{eff} greater than 0.95, soluble boron is credited to ensure k_{eff} remains below 0.95. With respect to the abnormal/accident condition analysis provide the following information:

a) The limiting abnormal/accident condition identified is the misloading of one fuel assembly into either storage configuration. Justify why the misloading of one fuel assembly is limiting.
b) Section 4.4.6.6 of Attachment 1 to Reference [A] indicates that the IP3 required SFP minimum required soluble boron is 1000 PPM while the IP2 required SFP minimum required soluble boron is 2000 PPM and that the STC is therefore a potential dilution source for IP2 SFP. The discussion mentions administrative controls that will be used to ensure the STC has a minimum soluble boron concentration of 2000 PPM. Rather than rely on administrative controls add a surveillance requirement to the proposed IP3 TS 3.7.18 to ensure the STC soluble boron concentration is above 2000 PPM before being removed from the IP3 SFP.

Response to RAI 4-17

a) The accident analysis has been revised to take into consideration the actual and expected fuel inventory in the IP3 spent fuel pool. As a result, two different scenarios are now analyzed, one with a full load of slightly underburned assemblies, and one with four severely underburned assemblies. The misload of a fresh fuel assembly is no longer considered since no fresh fuel assemblies will be in the spent fuel pool while the STC is being loaded. See Section 4.7.8 of the revised licensing report for further information.
b) A Surveillance requirement for soluble boron monitoring has been added to the TS Appendix C, LCO 3.1.1.

NRC RAI 4-18

Either in Section 4 or in Appendix A to Section 4, the following validation issues should have been addressed:

i) State the ranges of parameters that the safety analysis fits within. For example, the minimum and maximum values for ^{235}U enrichment, EALF, soluble boron concentrations, Pu content and composition, etc.

Response to RAI 4-18

The important parameters, including ranges if applicable, are now listed in Section 4.2.1, Table 4.2.1. Additionally, since the revised and extended benchmarking is based on the work performed for the MPC-32, a comparison between the STC and the MPC-32 is presented in Table 4.7.18, and a more generic comparison of the parameters of the revised criticality benchmarking calculations and the typical spent fuel storage and transport design applications is presented in Table 4.A.2.9-1. Note that since the critical experiments benchmarking showed no trend with EALF, this parameter was not determined for the STC. Also, a burnup range is specified rather than Pu content and composition, since all benchmarks used for the revised analyses contain spent fuel or simulated spent fuel.

NRC RAI 4-19

Describe other features present in the safety analysis models that require validation.

Response to RAI 4-19

Appendix A to Chapter 4 now also contains benchmarks with the HTC critical experiments. Those experiments were specifically designed to be representative of spent fuel storage and transport systems, and hence cover the presence of items such as steel walls, poison plates, borated water and steel and lead reflectors that are present in the STC. Based on this, and on the additional margin provided through the extended benchmarking (see discussion titled "Benchmarking" at the beginning of the RAI responses to Chapter 4), the models are considered sufficiently validated.

NRC RAI 4-20

4-20. State the ranges of parameters covered by the critical experiments used in the validation study.

Response to RAI 4-20

Revised Appendix A to Chapter 4 contains discussions and tables that present the ranges of parameters for the various validations. Comparisons with the parameters for the STC (see response to RAI 4-18) are also provided in those discussions.

NRC RAI 4-21

The staff in its acceptance review requested the applicant to provide justification for the applicability of the selected critical experiments to the code benchmark and USL calculation of the Indian Point fuel transfer cask criticality calculation. In its response, the applicant states that Holtec has performed comprehensive validation calculations in the context of taking burnup credit for Holtec's transportation cask, HI-STAR 100. The applicant advised the staff to read the SAR for HI-STAR 100 cask design. The staff reviewed the SAR for HI-STAR 100 cask design and found the methodology acceptable for the purpose of MCNP code benchmark. However, the applicant has not demonstrated that the results for HI-STAR 100 cask design are applicable to and adequate for the Indian Point spent fuel transfer cask given the facts: (1) the Indian Point transfer cask design takes burnup credit for all isotopes that CASMO keeps track of, except Xenon-135, at zero cooling time whereas the HI-STAR 100 uses only some selected actinides and fission products with minimum of 5 years cooling time; and (2) the HI-STAR 100 applicant analyzed individually the reactivity effects of each isotope via benchmark for all of the isotopes for which burnup credit was claimed, however, there is no such analysis for any of the isotopes in the Indian Point fuel cask design. If burnup credit is desired for a specific isotope, the code benchmark for criticality should be performed to quantitatively determine the reactivity worth and the associated bias and uncertainties. For these reasons, the uncertainties and bias established for HI-STAR 100 may not be applicable. The applicant is requested to provide justification for the applicability of the benchmarks performed for HI-STAR 100 design and provide bias and uncertainty analyses for each of the isotopes for which burnup credits are taken. Provide justification for the applicability of the selected critical experiments to the code benchmark and USL calculation of the Indian Point fuel transfer cask criticality calculation. In addition, in its response to RAI 3b, the applicant discussed, though not sufficiently, benchmarks performed for HI-STAR 100. These discussions should be part of the Safety Analysis Report for the Indian Point fuel transfer cask. It seems appropriate to add the response to RSI 3.b in order to make the SAR complete and consistent. Discuss the applicability of the validation study to the safety analysis models.

Response to RAI 4-21

The methodology has been revised to be more in-line with that used in the HI-STAR 100 burnup credit application. Specifally, (1) a minimum cooling time of 5 years is now used in the analyses for the STC, which is the same cooling time used for the HI-STAR 100; and (2) Calculations to determine the reactivity effect of each isotope have now also been performed for the STC, in the same way as it was performed for the HI-STAR 100. Further note that the validation of the depletion analysis is now also performed consistent with the HI-STAR 100 approach. See also discussion titled "Benchmarking" at the beginning of the RAI responses to Chapter 4, and Section 4.7.2 and Appendix A of Chapter 4 for further details.

NRC RAI 4-22

Discuss gaps within the parametric range covered by the validation and, if necessary, additional margin adopted to cover interpolation.

Response to RAI 4-22

The extended set of benchmarking calculations cover all relevant parameters without any substantial gaps. Additionally, the potential margin of the analyses, estimated to be up to 0.0660 delta-k, would be sufficient to offset any unidentified small gaps in the validation.

NRC RAI 4-23

Discuss extrapolation beyond the parameter range covered by the validation study and, if necessary, additional margin adopted to cover extrapolation.

Response to RAI 4-23

The new benchmarking methodologies specifically apply statistical approaches that account for the increased uncertainty of extrapolating beyond parameters covered in the validation. See Appendix A of Chapter 4 for further details.

NRC RAI 4-24

Discuss validation gaps (e.g., fission product validation) and, if appropriate, additional margin adopted to cover validation gaps.

Response to RAI 4-24

The new benchmarking methodologies now address validation of fission products, both in the depletion validation and in the validation of the reactivity effects, and apply appropriate correction factors and bias and bias uncertainty values (See Appendix A of Chapter 4 for further details). Additional margin is therefore not considered necessary.

NRC RAI 4-25

HI-2084176 Appendix A Sections A.2 and A.3 include discussion of comparisons between MCNP and KENO results. From Section A.2: "Since it is very unlikely that two independent methods of analysis would be subject to the same error, this comparison is considered confirmation of the absence of an enrichment effect (trend) in the bias." These two methods are

not independent. They both use data derived from the same cross section measurements and, in part, from the same ENDF/B-V evaluation. Consequently, they include the same nuclear data measurement errors and evaluation errors and would be expected to respond similarly to these errors. The comparisons provided serve only to confirm that both codes respond to the same data, erroneous or not, in the same way. The conclusions in Section A.2 and A.3 on enrichment and B-10 biases based on the KENO/MCNP comparison should not be given any credit.

a) Revise the text in Sections A.2 and A.3 to remove use of code-to-code comparisons.
b) Describe how this affects the analysis.

Response to RAI 4-25

Since the KENO code is not used in the analysis of the STC, all references to this code or to a code-to-code comparison between KENO and MCNP have been removed from the licensing report.

NRC RAI 4-26

HI-2084176 Appendix A Section A.4.1 includes the following statement: "The tendency toward over-prediction at close spacing means that the rack calculations may be slightly more conservative than otherwise." This also means the critical experiment calculations are too high, which is non-conservative. The rack calculations are not "more conservative" because the computational bias also includes this trend.

i) Revise the text to remove claims that the tendency toward over-prediction at close spacing is conservative.
ii) Quantify this potential non-conservatism.

Response to RAI 4-26

HI-2084176 Appendix A has been revised and now includes a significantly expanded set of benchmark evaluations, including more evaluations from the HTC benchmarks with reflectors at close distance to the fuel. Trend analyses were performed on many parameters, including this distance. They show no relevant trend as a function of the distance of the reflector. Therefore,

i) The text has been removed; and
ii) Effectes of reflectors are included in the revised bias and bias uncertainty values, and there is no reason any more to consider any potential non- conservatism.

NRC RAI 4-27

Section 4.8 of Holtec Report HI-2094289 discusses the acceptability of storing IP3 fuel in the IP2 spent fuel pit. In order for the staff to evaluate whether it is acceptable to store the IP3 SNF in the IP2 SFP provide the following information:

a) A comprehensive comparison of the design of the IP3 fuel assemblies, IP2 fuel assemblies, and the fuel assembly used in the IP2 SFP criticality analysis of record. Include grid strips.
b) A comprehensive comparison of the IP3 reactor and IP2 reactor operating parameters, such as maximum core exit temperature and cycle average soluble boron concentrations, with the values used in the IP2 SFP criticality analysis of record. Include nominal and maximum values.

c) A comprehensive comparison of the IP3 reactor and IP2 reactor use of integral (e.g. IFBA) and non-integral (e.g., WABA, WDR, RCCAs, etc.) reactivity control devices with the values used in the IP2 SFP criticality analysis of record. Include nominal and maximum values.
d) A comprehensive comparison of the IP3 reactor and IP2 reactor axial burnup profiles with the axial burnup profiles used in the IP2 SFP criticality analysis of record. Include nominal and maximum values.
e) Items a through d above are not intended to be an all encompassing list of items the licensee should consider in evaluating the storage of IP3 SNF in the IP2 SFP. The licensee should also include any additional items they self identify.
f) Compare and contrast the above information with regard to criticality in the IP2 SFP.

Response to RAI 4-27

a) The fuel assembly types used at IP2 and IP3 are nearly identical Westinghouse 15x15 designs and include the OFA, LOPAR, HIPAR, VANTAGE 5, VANTAGE+, VANTAGE P+/V+, and Upgraded Fuel types. The table below shows a summary of the range of the parameters important to criticality and how they compare to the design basis analyses. The table shows only very minor differences between these various fuel types and these differences have an insignificant impact on reactivity.

IP2 DBA		IP3 Range	IP2 Range
Rod array	15x15	15x15	15x15
Number of Guide Tubes	21	21	21
Rod-to-rod pitch	0.563	0.563	0.563
Cladding Tube OD	0.422	0.422	0.422
Cladding tube wall thickness	0.0243	0.0243	0.0243
Pellet OD	0.3659	0.3649-0.3659	0.3659-0.3669
Pellet Density, % theoretical	95.70%	94.3-96.5%	94.3-95.87
Active Length	144	144	141.72-144
Guide Tube Thickness, in.	0.017	0.015-0.017	0.015-0.017

Other important fuel assembly parameters are axial enrichment variations (axial blankets). Those are conservatively treated in the DBA as fully enriched along the entire active fuel length and need therefore not to be discussed here.

Spacer grids are not explicitly addressed in the DBA. So any differences in spacer grid material type, number and design fuel types are inconsequential with respect to the

DBA. Note that spacer grids are known to have only a small or even negative reactivity effect, specifically at fresh water conditions.

In summary, fuel design are considered equivalent in terms of the DBA.

b) The operating parameters used in the IP2 analysis of record are shown in the following table.

IP2 DBA		IP3	IP2
T_{mod} (°F)	624	598 (max core outlet)	598 (max core outlet)
Soluble Boron (ppm)	750	1228-1632 (HFP BOC) 614 – 816 (Avg)	1186-1463 (HFP BOC) 593 – 732 (Avg)
Reactor Specific Power (W/g)	34.81	31.3-36.8	34.1-36.7

The table also provides information related to the operating parameters from both IP2 and IP3. Of the listed parameters, the moderator temperature is known to have the most significant impact on reactivity. As can be seen from the table, the moderator temperature used in the analysis bounds the core outlet temperature by a large margin. Note that the moderator temperature values presented for IP2 and IP3 are the maximum values over all cycles. The soluble boron concentrations presented for IP3 and IP2 are taken at the maximum value determined at HFP ARO at 0 burnup, and the average is taken as 50% of the maximum. The ranges over all cycles are presented. The comparison shows a slight difference in the soluble boron concentration, with a maximum average of 816 ppm for IP3 for a single cycle, whereas 750 ppm was used in the DBA. However, only a limited number of cycles have exceeded the value of 750 ppm used in the analyses, and when the average is calculated over 3 consecutive cycles, the maximum value for IP3 reduces to about 770 ppm. This reduces the difference to the DBA to 20 ppm, which would have a negligible effect on reactivity. The fuel temperature value used in the IP2 analysis was 1344 F which is considered typical for both IP2 and IP3. For the reactor specific power, the range of values is presented for both units for both the minimum and maximum values over all cycles, and the DBA uses a value consistent with those ranges.

In summary, the IP2 DBA core operation parameters are representative for both the IP2 and IP3 fuel, with very small difference in the soluble boron concentration.

c) The IP2 DBA considers both integral (i.e. IFBA) and non-integral reactivity control devices (i.e. WABA):

- IFBA are credited for fresh fuel in Region 1 analyses. These calculations are not applicable to the storage of spent fuel in Region 2 cells where the IP3 fuel is intended to be stored.

- With respect to WABA, the maximum number of WABA rods is used in sensitivity calculations to determine a spent fuel reactivity bias of 0.01delta-k. This bias is accounted for in the determination of the soluble boron credit.

Devices used in the core designs are as follows:

- The IP2 core designs made use of the following reactivity control devices: full and part length RCCA's, BPRA (borosilicate glass/pyrex glass), WABA, and IFBA.

- The IP3 core designs made use of the following reactivity control devices: full and part length RCCA's, BPRA (borosilicate glass/pyrex glass), WABA, hafnium rods, and IFBA.

A comparison shows that the same devices were used in both units, except for hafnium inserts for flux suppression that were only used in IP3. However, those inserts were only used in a limited number of assemblies at the periphery of the core, and only for a burnup of up to about 6 GWd/MTU in each assembly.

In summary, the DBA considers the burnable poison inserts with a reactivity/soluble boron adjustment, but there is no consideration for hafnium flux suppression inserts used in some assemblies in IP3. To account for the effect of those hafnium inserts in a conservative way, the burnup of the assemblies that were exposed to them should be reduced by the exposure with hafnium inserts before comparing the value to any burnup requirements for the IP2 pool. For example, and assembly with 40 GWD/MTU that had a hafnium insert for 5 GWD/MTU should be considered a 35 GWD/MTU for the purpose of placing it into the IP2 pool.

d) No details are available about the axial burnup profiles for the fuel at IP2 and IP3. The IP2 DBA analysis is based on a single profile developed for a certain core location. This is the center location of the core where the same assembly can be placed for consecutive cycles under a control bank in a "bite" position. The potential effect of this condition was evaluated in the DBA in terms of the axial profile and the isotopic composition of the fuel, and was conservatively considered for all fuel assemblies. This approach is also applicable to IP3, where center assemblies also have been placed for two consecutive cycles.

   In summary, the DBA uses a conservative approach for axial burnup profiles that is equally applicable to both IP2 and IP3.

e) and f) A comparison has been performed between the design basis criticality calculations for the IP2 spent fuel pool, and the corresponding parameters of the IP2 and IP3 fuel. The purpose of this comparison was to determine if those analyses for IP2 fuel in the IP2 pool would be equally applicable to IP3 fuel in the IP2 pool. This comparison concludes that the two units are nearly identical and that the IP2 analysis of record has inherent conservatisms that offset the minor differences between the units. Differences were found in the in-core soluble boron concentration in the analyses, which is slightly below the average value for some IP3 cycles, and the fact the IP2 analyses did not explicitly consider hafnium flux suppression inserts. Some of the conservatisms that would offset any effect from those are the selection of the moderator temperatures, and the fact that axial blankets, which are known to reduce the calculated reactivity, are ignored in the DBA. Overall, the IP2 DBA is therefore considered applicable to IP3 fuel, hence no additional analyses are considered necessary to store IP3 fuel in the IP2 pool.

NRC RAI 4-28

In Holtec Report No HI-2084176 Appendix B, "Criticality Safety Evaluation of the IP-3 Shielded Transfer Cask," the applicant cites the use of CASMO to determine the Δk_{eff} effect caused by variations of depletion parameters and manufacture tolerances. However, the explanation does not seem to have established a basis for why the difference in k_∞ calculated by the lattice physics code CASMO can be applied directly as quantitative uncertainties and biases of k_{eff} calculated by the criticality code MCNP. In particular, given the fact that the neutron spectrum in a finite system is much softer comparing to that of an infinite system because the fast neutrons in a finite system have a higher leakage probability in comparison with that of an infinite medium, the Δk_{eff} calculated for an infinite system may be not appropriate for use as an adjustment for correcting the effects of the variations of the fuel assembly design parameters. The applicant is requested to demonstrate that the Δk_∞ calculated based on infinite lattice can be applied directly as uncertainties and biases of k_{eff}. In addition, the CASMO code is a discrete ordinate method code whereas MCNP is a Monte Carlo method code. These two codes use different approaches to solve the neutron transport problem and use different schemes of processing cross sections (the former uses fine group cross section library and the latter uses continuous energy cross section library) as well as different basic nuclear data. Therefore, the biases and uncertainties in these two codes may come from different sources, i.e., truncation error caused by discretizing ordinates versus statistical bias associated with the random sampling process. As such, the bias and uncertainties from a discrete ordinate code may not be of the same nature. The applicant is requested to demonstrate applicability of the proposed approach for addressing the code bias and uncertainty question. Demonstrate that the difference in k_∞ caused by variations of fuel assembly nuclear characters, such as depletion parameters and manufacture tolerances, can be used as a basis for determining the k_{eff} difference in criticality calculations.

Response to RAI 4-28

In order to address the concerns expressed in this RAI, the analyses have been revised, whereas the use of CASMO and the use of reactivity uncertainties has changed substantially. See discussion titled "CASMO and Uncertainties" at the beginning of the RAI responses to Chapter 4 for a more detailed discussion.

NRC RAI 4-29

On page 5 of the revised Holtec Report No HI-2084176, "Criticality Safety Evaluation of the IP-3 Shielded Transfer Cask," the applicant states: "Benchmark calculations for CASMO-4 for fresh fuel, presented in Appendix B, indicate a very small bias and a bias uncertainty of ± 0.0035 ...." However, the modeled configuration does not seem to be a critical experiment. The applicant is requested to provide justification for benchmark experiments used to determine the bias and uncertainty of the computer codes. Also address the uncertainty in the k_{eff} value derived for any such critical system used as benchmark. In addition, the information presented in Table 7.2 seems to indicate that the bias and uncertainty values are from calculations of different code, i.e., the bias is from MCNP and the bias uncertainty is from CASMO. The applicant is requested to provide explanation for these data and justification why the bias and bias uncertainty from different code calculations can be combined and used as bias and uncertainty of criticality calculations.

a) Provide benchmark calculations to demonstrate that the bias is small for CASMO-4 benchmark with fresh fuel.
b) Provide justifications for the applicability of the benchmark calculation as presented in Table 7.2 in the Appendix B of the revised Holtec Report No HI-2084176, "Criticality Safety Evaluation of the IP-3 Shielded Transfer Cask."

Response to RAI 4-29

CASMO is no longer used to calculate any quantitative reactivities, or reactivity differences used as uncertainties. (see also discussion titled "CASMO and Uncertainties" at the beginning of the RAI responses to Chapter 4). Therefore, benchmarking of CASMO is no longer required, and Appendix B is removed.

NRC RAI 4-30

In section B.2 of Appendix B of revised Holtec Report No. HI-2084176, "Criticality Safety Evaluation of the IP-3 Shielded Transfer Cask" the applicant discusses the effect and implementation of the bias and uncertainty determined for CASMO-4. However, the conclusions therein do not appear justified because (1) in principle, bias may be canceled out, but uncertainties must be propagated; and (2) using error cancellation does not seem to be a reliable means to achieve reliable results in scientific calculations. The applicant needs to demonstrate that the biases in CASMO calculations are always small or moderate for the system it models. Therefore, the staff requests the licensee to demonstrate that the uncertainties in the criticality calculations can always be cancelled out.

Response to RAI 4-30

CASMO is no longer used to calculate any quantitative reactivities, or reactivity differences used as uncertainties. (see also discussion titled "CASMO and Uncertainties" at the beginning of the RAI responses to Chapter 4). Therefore, benchmarking of CASMO is no longer required, and Appendix B is removed.

NRC RAI 4-31

The applicant provides discussion for code to code comparison as a basis for justifying the use of CASMO-4 code for determining the bias uncertainty of k_{eff} calculation for spent fuel cask. It is a well established and understood principle (refer to ANS 8.1 and NUREG-1617) that code to code comparison is not acceptable as a basis for quantifying the bias and uncertainty of a code. Qualitative comparison is not acceptable either. Provide justification for the discussion on code comparison on pages B-2, B-5, and B-6 of the revised Holtec Report No HI-2084176, "Criticality Safety Evaluation of the IP-3 Shielded Transfer Cask."

Response to RAI 4-31

CASMO is no longer used to calculate any quantitative reactivities, or reactivity differences used as uncertainties. (see also discussion titled "CASMO and Uncertainties" at the beginning of the RAI responses to Chapter 4). Therefore, benchmarking of CASMO, including any code to code comparisons, is no longer required, and Appendix B is removed.

NRC RAI 4-32

On page B-2 of the revised Holtec Report No HI-2084176, "Criticality Safety Evaluation of the IP-3 Shielded Transfer Cask," the applicant states that benchmarking calculations performed by the developer of the CASMO code were used to determine the bias and bias uncertainty of the code. However, it was not clear how the code was benchmarked by the developer and how the applicability of these benchmarks for this specific application was justified. The applicant is requested to provide benchmark calculations that can demonstrate that the bias and bias uncertainty from the code benchmark can be used for the Indian Point spent fuel transfer cask criticality safety evaluation. Provide a CASMO benchmark calculation that can demonstrate that the bias and bias uncertainty from the code benchmark can be used for the Indian Point spent fuel transfer cask system.

Response to RAI 4-32

CASMO is no longer used to calculate any quantitative reactivities, or reactivity differences used as uncertainties. (see also discussion titled "CASMO and Uncertainties" at the beginning of the RAI responses to Chapter 4). Therefore, benchmarking of CASMO is no longer required, and Appendix B is removed.

NRC RAI 4-33

The applicant, on page B-5 of the revised Holtec Report No. HI-2084176, "Criticality Safety Evaluation of the IP-3 Shielded Transfer Cask," states: "The results are summarized in Table B.1. The average k_∞ value is 1.0003, indicating a small bias of -0.0003. The standard deviation is 0.0012. The K-factor for a single sided tolerance limit for 44 experiments is 2.1 for the 95%/95% level. The bias uncertainty at the 95%/95% level is therefore 0.0025. For additional conservatism, a value of 0.0035 is used in the design basis calculations." The applicant further provides information on the selected benchmark experiments in Table B.1. However, the exact configurations of these critical experiments were not clear. It is also not clear how the CASMO-4 code could produce a k_∞ for systems with finite dimensions. Finally, information on the applicability of these benchmark results to the Indian Point spent transfer cask system was not provided. The applicant is requested to provide detailed explanations for the information presented in Table B.1, with respects to the above discussions. Provide detailed explanations for the information presented in Table B.1.

Response to RAI 4-33

CASMO is no longer used to calculate any quantitative reactivities, or reactivity differences used as uncertainties. (see also discussion titled "CASMO and Uncertainties" at the beginning of the RAI responses to Chapter 4). Therefore, benchmarking of CASMO is no longer required, and Appendix B is removed.

References cited in responses to Chapter 4 RAIs:

A Entergy, Nuclear Operations, Incorporated, letter NL-09-076, J. E. Pollock, Site Vice President, to USNRC document control desk, re: Indian Point Nuclear Power Plant Units 2 and 3, Application for Unit 2 Operating License Condition Change and Units 2 and 3 Technical Specification Changes to Add Inter-Unit Spent Fuel Transfer Requirements, July 8, 2009. (ADAMS ML091940177)

B Entergy, Nuclear Operations, Incorporated, letter NL-09-100, J. E. Pollock, Site Vice President, to USNRC document control desk, re: Indian Point Nuclear Power Plant Units 2 and 3, Response to Request for Supplemental Information Regarding the Spent Fuel Transfer License Amendment Request (TAC Nos. ME1671, ME1672, and L24299), September 28, 2009. (ADAMS ML092950437)

C NRC Memorandum from L. Kopp to T. Collins, Guidance on the Regulatory Requirements for Criticality Analysis of Fuel Storage at Light-Water Reactor Power Plants," August 19, 1998. (ADAMS ML003728001)

D NUREG/CR-6665, "Review and Prioritization of Technical Issues Related to Burnup Credit for LWR Fuel," (ADAMS ML003688150)

CHAPTER 5 - THERMAL-HYDRAULIC EVALUATION

NRC RAI 5-1

Provide all input and output files used to perform the thermal-hydraulic analyses of the system during normal and accident conditions. (TCB)

The staff needs to verify that the thermal hydraulic system is appropriately analyzed and modeled, in order to verify the acceptability of the temperatures and pressures reported in the application. The files should include, in part, the calculations used to support supplemental responses 2b and 2g. This information is needed for the NRC staff's review to ensure compliance with the criteria contained in GDC 61.

Response to RAI 5-1

All input and output files supporting thermal-hydraulic calculations are copied on electronic media and included as a proprietary attachment to this response.

NRC RAI 5-2

Justify and explain how the water level under the STC lid is operationally maintained one inch above the basket. (TCB)

The thermal-hydraulic analysis of the system states the water level under the STC lid must be maintained above the basket to allow convective water motion around the basket. The calculation states water level above the fuel basket inside the STC is one inch. Convective heat transfer appears to be the main heat rejection feature for the system to maintain temperatures and pressure below allowable limits. Therefore, the staff needs to have assurance the water level assumed in the thermal-hydraulic analysis is reliably maintained for all operational modes.

This information is needed for the NRC staff's review to ensure compliance with the criteria contained in GDC 61.

Response to RAI 5-2

The water level under the STC lid is required to be maintained at the appropriate level using a fixed length drain tube. Pressurized steam is connected to the vent connection and the drain connection is routed to a collection system suitable for liquid rad waste. The pressurized steam is fed through the vent connection and forces water out through the drain tube. Once the water level reaches the bottom of the drain tube, the steam will bypass the water and will flow out of the drain tube. At this point, the water level inside the canister is equal to the bottom of the drain tube. It is not physically possible to drive water out of the drain line below the drain tube and the presence of a vapor/liquid mixture in the discharge line assures the operator that the water level is at the appropriate level.

NRC RAI 5-3

Justify why ignoring the volume of grid spacers, top fittings, and bottom fittings would be conservative for the calculation of pressure rise on the STC lid. (TCB)

The application states the volume of grid spacers, top fittings, and bottom fittings are ignored, and that this maximizes the calculated volume of water inside the STC and, hence, is conservative for the calculation of pressure rise on the STC lid. It appears that ignoring this volume would result in having a larger volume of water which would decrease the bulk water temperature and result in a lower pressure. This assumption is used in other calculations, as presented in the application. The applicant should revise the calculation package as appropriate to address the realistic volume of water expected in the cask system.

This information is needed for the NRC staff's review to ensure compliance with the criteria contained in GDC 61.

Response to RAI 5-3

Ignoring the volume of the fuel assembly grid spacers, top fittings, and bottom fittings results in the volume they occupy being replaced with water. In the original submittal maximization of the water volume conservatively ensured the overstatement of water volume expansion and coincident maximization of air pocket compression. However, certain enhancements to the STC operation have been implemented to render the STC pressure independent of the volume of water in the STC. The STC operating procedure has been revised to eliminate air and replace it with steam in the STC top plenum below the STC lid. The necessary operational steps to implement this change are incorporated in Chapter 10 of the STC Licensing Report HI-2094289. With this change, the pressure in the STC will be entirely controlled by the temperature of the STC water surface (under steady state conditions). Specifically, the pressure will essentially be equal to the vapor pressure corresponding to the STC water surface temperature. (In practice, the steady state condition is unlikely to be reached due to the large thermal inertia of the transfer package and the actual pressure will be lower than the steady state equilibrium value). In this manner the space in the top plenum is rendered non-limiting in establishing the internal pressure of the STC. This approach also eliminates the need to determine fuel assembly volumes with a high level of accuracy.

NRC RAI 5-4

Justify the initial temperatures used in the thermal-hydraulic analyses of the system for both normal conditions of transfer and accident conditions. (TCB)

The assumed initial temperatures appear to be a critical parameter for subsequent calculations of predicted temperatures and pressure during normal transfer and accident conditions. These predictions are directly depending on the initial assumed value which would imply the thermal-hydraulic analysis is not bounding.

This information is needed for the NRC staff's review to ensure compliance with the criteria contained in GDC 61.

Response to RAI 5-4

As normal conditions are bounded by computation of steady state maximum temperatures initial (non boundary) conditions are not germane to evaluation of normal transfer operations. Accident scenarios are evaluated as transients assuming initial conditions are co-incident with the maximum steady state condition under normal transfer operations. However, we believe the staff comment applies to transient thermal-hydraulic calculations addressing the following:

(i) Fuel misload detection test

(ii) Crane malfunction time-to-boil calculation

The fuel misload detection test is defined in Licensing Report Section 5.3.4. The test requires monitoring the STC pressure following fuel loading and removal of the STC from the pool and placed in the HI-TRAC. During the fuel misload testing the STC pressure rise is monitored and confirmed to remain below the 24-hour pressure rise under design basis heat load. STC pressure is selected to detect misloads because it responds sensitively to STC decay heats (See RAI 5-10 response).

The crane malfunction is an extreme accident event wherein the IP3 crane is postulated to stop operation with the STC hanging above the pool co-incident with a fuel misloading error wherein every fuel storage location is assumed to be loaded with fuel generating two times the design basis heat load. Under this scenario the STC is assumed to be initially flooded with 100°F pool water. This assumption bounds pool water temperature during post-outage STC fuel loading operations conducted in accordance with proposed Appendix C to the Operating License TS 4.1.4.2. As an additional measure of conservatism the STC is assumed to be insulated from the ambient environment and the water subjected to adiabatic heating. These assumptions collectively ensure large margins[1] in the available time to reach boiling temperature. The time-to-boil results are given below:

Decay Heat: 19.2 kW
Time-to-boil[2]: 17.8 hrs

Thus, under these conditions, a significant time period is available to implement corrective actions under a crane malfunction event. These include restoration of crane function or otherwise steps implemented to manually lower the STC back into the fuel pool.

NRC RAI 5-5

Clarify if the correlation used to calculate the Nusselt number on Appendix G of Holtec Report No. HI-2084146 is applicable to rod array (as the spent fuel assembly case). The staff needs to have assurance an applicable correlation is used in the thermal-hydraulic calculations. (TCB)

This information is needed for the NRC staff's review to ensure compliance with the criteria contained in GDC 61.

Response to RAI 5-5

The Nusselt number correlation described in the licensing report is similar to sub-channel modeling methodologies wherein rod arrays are approximated by sub-channel hydraulic diameters. This correlation recommended by Rohsenow's Handbook of Heat Transfer yields leading order characterization of heat transfer in rod arrays. The correlation has regulatory precedence by virtue of it's acceptance in wet storage licensing applications at many US plants. A partial listing of applications is tabulated below.

[1] Adiabatic heatup is a very conservative measure to compute time-to-boil because all means of STC cooling – conduction, convection and radiation – are suppressed.
[2] Time-to-boil is the available time starting from when the STC breaks water to the time of completion of partial water removal to establish the steam plenum below the STC lid.

PARTIAL LISTING OF WET RERACK AMENDMENTS USING SIMILAR METHODS OF THERMAL-HYDRAULIC ANALYSIS	
PLANT	DOCKET NO.
Diablo Canyon Units 1 and 2	USNRC 50-275, 50-455
Byron Units 1 and 2	USNRC 50-454, 50-455
Braidwood Units 1 and 2	USNRC 50-456, 50-457
Sequoyah	USNRC 50-327, 50-328
Waterford 3	USNRC 50-382

Historical precedence notwithstanding, Entergy has also obtained guidance on second order effects in rod arrays. These effects are characterized by the ratio Nu/Nu_{circ} where Nu is rods array Nusselt number and Nu_{circ} is Nusselt number in a circular rod of equivalent (i.e. hydraulic) diameter. The Nusselt number ratio is a function of the pitch-to-diameter ratio p/d defined below:

Reference: "Nuclear Engineering Computer Modules, Thermal-Hydraulics, TH-1: Pressurized Water Reactors", by T.C. Reihman, Virginia Polytechnic Inst. and State Univ., 1973, Page 37.

$$\frac{Nu}{Nu_{circ}} = -3.475 + 8.053\frac{p}{d} - 4.705\left(\frac{p}{d}\right)^2 + 0.9162\left(\frac{p}{d}\right)^3$$

The Nusselt number ratio covering a wide range of p/d values is computed and tabulated below:

p/d	Nu/Nu_{circ}
1.2	0.9966
1.3	1.0553
1.4	1.0915
1.5	1.1104
1.6	1.1178

From the above Table the Nusselt number ratio for IP-3 fuel (W-15x15, p/d = 1.33) is 1.06. In other words the Nusselt number used in the licensing basis calculation is understated by approximately 6%. The above results show that heat transfer in rod arrays is understated by sub-channel methodologies. The conservatism for IP3 fuel is estimated in the tabulation above.

NRC RAI 5-6

Review the heat transfer correlation used to obtain the heat transfer coefficient for the evaluation of the STC without the HI-TRAC. Page I-3 of Holtec Report HI-2084146 includes a correlation to calculate a heat transfer coefficient. The temperature difference is expressed to the power of 1/3 and subsequent use of the correlation is inconsistent with this value. (TCB)

This information is needed for the NRC staff's review to ensure compliance with the criteria contained in GDC 61.

Response to RAI 5-6

Because of the non-linear nature of the heat transfer correlation the coefficients in the thermal models occasionally may not be in agreement with the correlation. These are, however, second order differences that do not affect conclusions. To respond to NRC comments necessary adjustments to the heat transfer coefficients in the thermal models are made. The adjustments are implemented as follows:

- Cask-to-ambient ΔT is conservatively postulated
- Obtain heat transfer coefficient as 1/3 exponent of ΔT
- Apply heat transfer coefficient to thermal model and update results

The updated results are provided in the revised thermal calculation report HI-2084146. The thermal margins and report conclusions are unaffected by this change.

NRC RAI 5-7

Provide a detailed description and validation of the misload temperature measurement system including any diagrams and detailed operating procedures. (TCB)

The applicant should specify exact radial and axial measurement locations, instrumentation, accuracy and calibration of equipment, validation testing, and operating steps. The applicant should also identify components that are safety related. In addition, the applicant should specify the reliability of this system, and provide any benchmark data for use of this type of system in nuclear industrial applications.

This information is needed for the NRC staff's review to ensure compliance with the criteria contained in GDC 1, 61, 62 and 10 CFR 50.68.

Response to RAI 5-7

The proposed methodology that will be used to detect a misloaded fuel assembly has been changed from a temperature monitoring system to a pressure monitoring system. During the test the pressure rise inside the STC will be monitored after the fuel has been loaded and prior to transferring the STC between units to verify that it will remain below the 24-hour pressure rise under design basis heat load. The fuel misload test requirements are specified in Licensing Report Section 5.3.4. Therefore positioning of the temperature monitoring sensors in the STC is no longer required.

The pressure monitoring equipment will be attached to the vent and drain connections on the STC prior to their final closure for transfer. Therefore, the pressure monitoring equipment will provide a direct measurement of the pressure in the vapor space below the STC lid. Following placement of the loaded STC in the HI-TRAC, instrument trees will be connected to the vent and drain port connections on the STC lid. The instrument trees will include calibrated pressure indicators and pressure relief valves along with valves and connections for processing of the STC (See figure below). The instruments used for the pressure indicators will be sufficiently accurate (<1% uncertainty) to insure that the measured pressure is below the normal operating limits prior to transfer. The acceptance criteria for the pressure limit will be conservatively reduced to bound instrument uncertainties. The pressure indicators and the pressure relief devices used for monitoring and limiting the operating pressure will be calibrated in accordance with the site program for safety related instrumentation.

After the lid bolting has been properly torqued and the space above the fuel has been filled with steam, the isolation valves on the instrument trees will be closed to allow the STC pressure to stabilize. The pressure rise will be monitored for a period of at least 24 hours to confirm that it remains below 24-hour pressure rise under design basis heat load defined in the licensing report Section 5.3.4. If the pressure rise is within the permissible limit, the instrument trees will be removed from the lid and the STC and HI-TRAC processing will continue for fuel transfer to the IP2 pool. If the pressure rise exceeds permissible limit, it will be concluded that there is a mis-load scenario that will require the STC to be returned to the SFP and the fuel unloaded.

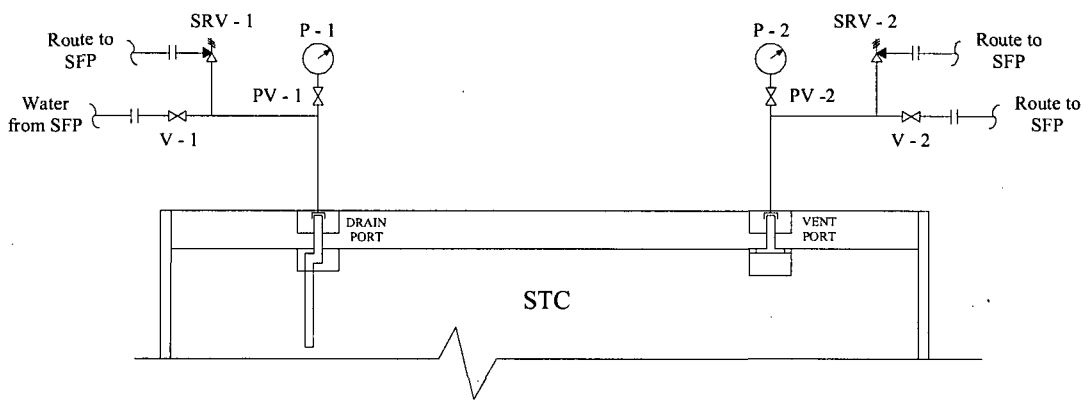

Figure 1: P&I Diagram for Pressure Monitoring System

NRC RAI 5-8

Clarify how the temperature probes/system is calibrated to cover the temperature range for fuel misload with very high decay heat. (TCB)

Supplemental response 2b states that the temperature probes/system shall be calibrated and shall be capable of accurately measuring temperature changes in the predicted range. It appears that the predicted range was obtained for the case when no fuel misload has occurred as shown on Figure 2.2 of the reference letter and therefore, will not include the range when a case of fuel misload has indeed occurred. Therefore, the system may not cover the broader range. Additional transient analyses should be performed to predict a range for the fuel misload case.

This information is needed for the NRC staff's review to ensure compliance with the criteria contained in GDC 61.

Response to RAI 5-8

The proposed methodology that will be used to detect a misloaded fuel assembly has been changed from a temperature monitoring system to a pressure monitoring system (see response to RAI 5-7 above). The normal operating pressure for the STC has been calculated based upon the maximum permissible heat load for the canister. The pressure instruments used to detect a

misloaded fuel assembly will have an operating range that exceeds the greater of twice the calculated normal operating pressure or the STC maximum design pressure.

NRC RAI 5-9

Revise the operating procedures to specify the exact location (both axial and radial) of the temperature probes in the STC. Ensure the location corresponds to the axial position with the maximum power peaking factor. (TCB)

Supplemental response 2b states that the operational procedures include a step to place calibrated probes at the designated locations. However, the location in the TSC is not specified. Temperature probes located at an elevation corresponding to the maximum peaking factor would react faster to large local decay heat power variations such in the case of a fuel misload event.

This information is needed for the NRC staff's review to ensure compliance with the criteria contained in GDC 61.

Response to RAI 5-9

The proposed methodology that will be used to detect a misloaded fuel assembly has been changed from a temperature monitoring system to a pressure monitoring system. During the test the pressure rise inside the STC will be monitored after the fuel has been loaded and prior to transferring the STC between units to verify that it will remain below the 24-hour pressure rise under design basis heat load. The fuel misload test requirements are adopted in Licensing Report Section 5.3.4. Therefore positioning of the temperature monitoring sensors in the STC is no longer required. See Response to RAI 5-7 above.

NRC RAI 5-10

Provide the increase in cavity pressures for the misload analyses summarized in Response 2g. Based on pressure and temperature design limits, specify the time to failure of the STC and HI-TRAC seals for this accident condition, similar to the information provided in response to 2b. (TCB)

This information is needed for the NRC staff's review to ensure compliance with the criteria contained in GDC 61.

Response to RAI 5-10

As explained in RAI 5-3 response the STC design is enhanced to minimize STC pressures by eliminating air and replacing it with steam in the STC cavity. A significant pressure rise during transfer of an STC from pool to HI-TRAC under a postulated fuel misload error co-incident with crane malfunction is not credible because the STC lid vent line (see Figure 1 in RAI response 5-7) is open to atmosphere and the lid is positioned unbolted above the STC with a small gap to provide passive relief and pressure equalization with the ambient.

In the STC lid bolted condition after it is placed in the HI-TRAC, overpressurization is not a concern because fuel misload detection tests are required to be conducted wherein the STC pressure rise is monitored and confirmed to remain below the 24-hour pressure rise under design basis heat load. The licensing report has been revised to address fuel misload testing in

Section 5.3.4. STC pressure is selected to detect misloads because it responds sensitively to STC decay heats. The pressure sensitivity is illustrated below under fuel misload accident evaluated in Licensing Report Section 5.4.4 wherein every storage location is loaded with fuel generating two times the maximum permitted heat load.

Design Heat Load STC Pressure (9.6 kW): -1.8 psig
Fuel Misload STC Pressure (19.2 kW): 29.0 psig

The evaluation in Licensing Report Section 5.4.4 shows that seal integrity is not compromised under fuel misload accident and STC pressure remains below permissible limits with significant margins.

NRC RAI 5-11

Clarify if other flammable materials (e.g. hydraulic fluids, rubber) are present on the VCT that could contribute to a large duration fire. (TCB)

This information is needed for the NRC staff's review to ensure compliance with the criteria contained in GDC 3 and 61.

Response to RAI 5-11

The VCT does not use rubber tires or other (apart from diesel fuel) flammable materials to conduct crawler movement operations. The crawler is equipped with metal tracks to effect movement operations. The lift arms of the VCT require hydraulic fluids for actuation. However, crawler hydraulic fluids do not pose a fire risk because hydraulic fluid flash points are typically well above the flammability thresholds specified in the fire codes. See information below.

NFPA Flammability threshold: Flash point ≤ 100°F
Typical hydraulic fluid flash point: 580°F (Cosmolubric B-230 Product Data)

The above data provides reasonable assurance that ignition of hydraulic fluid following a postulated spill is not credible. The only concern is that of a postulated spill co-incident with burning materials. Such a condition is not credible because the VCT haul path is free of combustible materials and the co-incidence of two accidents – fire and spill – is highly improbable.

To demonstrate defense-in-depth the fire duration under the design basis 50 gallon fuel tank fire is substantially increased by 25% and STC integrity evaluated. The principal results are provided below:

	Under Design basis fire duration	Under Increased duration fire	Limit
Max. Fuel Temperature	230°F	234°F	1058°F
Max. STC Pressure	3.4 psig	5.0 psig	65 psig
Max. HI-TRAC Pressure	21.0 psig	23.2 psig	50 psig

The results show that safety margins are not significantly affected by the increased duration of fire.

NRC RAI 5-12

Protection Against Overpressure (SBPB)

Table 1.3, "Accident/Initiating Events and the Resultant Effects," in Attachment 1 to the supplemental letter dated September 28, 2009, states that the HI-TRAC and STC are ASME Code compliant pressure vessels in discussing the effects of various postulated events. However, the design criteria applied to the HI-TRAC and STC do not include pressure relieving capability as specified in the ASME B&PV Code, Section III, Division I, Subsection ND.

To improve the staff's understanding of the degree of overpressure protection inherent in the design, describe the degree of conformance with Article UG-140, "Overpressure Protection by System Design," from Section VIII of the ASME B&PV Code – 2009b, Division I.

Response to RAI 5-12

Pressure relieving devices are not included in the STC design because of the over-arching requirement to ensure confinement of radioactivity under normal, off-normal and accident events. Overpressure protection is demonstrated by analysis for STC design and meets the intent of ASME Section III, Subsection ND and Article UG-140 as articulated below:

> UG-140(a)(2)
> "The user shall conduct a detailed analysis to identify and examine all potential overpressure scenarios."
>
> UG140(a)(3)(b)
> "a description of all operating and upset scenarios, including scenarios involving fire and those that result from operator error, equipment and/or instrumentation malfunctions"
>
> UG-140(a)(3)(c)
> "an analysis showing the maximum coincident pressure and temperature that can result from each of the scenarios listed in UG-140(a)(3)(b) above does not exceed the MAWP at that temperature"

In accordance with the above the design the STC and HI-TRAC are evaluated under an array of fuel loading, fuel transfer and accident scenarios including those that could be caused by operator errors and equipment malfunctions to confirm that the vessel design pressures are not exceeded. The list of scenarios is provided below:

(i) Normal fuel transfer operations
(ii) Fire accident
(iii) HI-TRAC jacket water loss accident
(iv) Simultaneous HI-TRAC jacket and annulus water loss accident
(v) Crane malfunction co-incident with fuel misload
(vi) Crane malfunction co-incident with fuel misload and blocked vents
(vii) Hypothetical HI-TRAC tipover accident
(viii) The STC is instrumented to monitor pressures. Following fuel loading operations fuel misload tests are conducted to ensure that STC working pressures remain within operating limits

The above scenarios are evaluated in Chapter 5 of the licensing report to ensure that STC and HI-TRAC pressures are self-limiting and that pressure relieving devices are not necessary for ensuring overpressure protection.

NRC RAI 5-13

Perform an analysis to show the effect of a simultaneous loss of jacket water and annulus water from the HI-TRAC, and show the long-term (30 day) effect on a loaded STC. Include the impact on dose rates for personnel in the vicinity. (LPL1-1)

This information is needed for the NRC staff's review to ensure compliance with the criteria contained in GDC 2, 60, and 61.

Response to RAI 5-13

A steady state thermal-hydraulic analysis of the HI-TRAC has been performed on FLUENT to characterize the temperature field in the transfer system under the double accident postulate wherein water in both the HI-TRAC annulus and in the water jacket is assumed to be lost (two simultaneous failures). The following key results are obtained:

	Maximum Result	Permissible Limit	Margin
Fuel Temperature	282°F	1058°F	776°F
STC Pressure	30.9 psig	65 psig	34.1 psig
HI-TRAC Pressure	3.3 psig	50 psig	46.7 psig

The results show that fuel temperatures and pressure limits of STC and HI-TRAC are met with adequate margins. The results show that the above condition has no adverse loading on the STC thus ensuring long duration integrity of the STC. The above analysis and results are added to Chapter 5 of the Licensing Report.

The dose consequence under the double accident water loss postulate is evaluated in the calculation package HI-2084109 supporting Shielding evaluations. The results show low site boundary dose consequences (1.03 mrem/hr lateral dose conservatively evaluated 50 m from HI-TRAC).

CHAPTER 6 - STRUCTURAL EVALUATION OF NORMAL AND ACCIDENT CONDITION LOADINGS

NRC RAI 6-1

Provide/justify the lack of fatigue analysis for the pool lid top plate and pool lid bolts (refer to page 6-17)(SMMB).

Report HI-2084118, Appendix C, evaluates the structural adequacy of the HI-TRAC under the design internal pressure and the lid lifting points. Report HI-2084118 indicates that the pool lid will undergo a maximum bending stress of 24,380 pounds per square inch (psi), whereas the allowable is 30,000psi. The pool lid bolts will undergo a maximum stress of 18,380 psi, whereas the allowable is 25,000 psi (thread engagement safety factor is 1.5). The pool lid will undergo a bending stress of 30,190 psi during 3 times lifted load (per Reg. Guide 3.61 Section 3.4.3), whereas the allowable is 32,500. These values are also included in section 6.2.3.4.

Considering the low (less than 1.5) safety factors, provide a fatigue evaluation, or justify the lack of one, for the pool lid top plate and pool lid bolts considering the loss of allowable stresses over the intended service life.

This information is required by the staff to assess compliance with GDC-61 and the intent of 10 CFR 72.122.

Response to RAI 6-1

An analysis for failure from cyclic fatigue of the pool lid top plate and the lid bolts was not performed because:

1. The number of cycles of loading and unloading is quite small (less than 500; 500 loading cycles is equivalent to 6000 fuel assemblies @ 12 assemblies per loading cycle). For purposes of the fatigue margin assessment, we will herein assume the number of cycles to be 1000, i.e., N = 1000.

2. The fatigue equations (curves) for the pool lid top plate (carbon steel) and bolts (high strength steel), originate from the 2004 ASME code (Section III, Appendix I, Figures I-9.1 and I-9.4) and show that the allowable Sa (cyclic fatigue amplitude) is considerably larger than the actual stress amplitude during normal handling. The table below provides the comparison:

Component	Material	Stress Amplitude (under normal handling conditions) 'S' (ksi) ‡	Cyclic Fatigue Amplitude 'Sa' from Fatigue Curve @ 1000 cycles (ksi)	Ratio of Sa to Actual Stress
Pool Lid Top Plate	SA-516 Gr. 70	10	82	8.2
Pool Lid Bolts	SA-193 B7	12.5	80	6.4

‡ Stress amplitude is one half of corresponding maximum allowable stress.

The margins indicated by the above simplified evaluation underlay the decision to forgo a detailed fatigue analysis for the pool lid and its bolts. Section 6.2.3.4 of the report has been revised with the information above.

NRC RAI 6-2

Provide clarification regarding the normal, off-normal, and extreme environmental conditions (refer to page 6-1)(SMMB).

Chapter 6 appears to evaluate the STC and HI-TRAC 100D structural performance only for normal and accident conditions. The loading conditions, which are consistent with regulatory requirements and staff guidance, must clearly be delineated and categorized for proper application of structural and stress acceptance criteria.

Revise/supplement the Section 6.0 statement, "The objective of structural analyses is to ensure that the integrity of the STC and HI-TRAC is maintained under normal, off-normal, and extreme environmental conditions as well as all credible accident events," by noting the off-normal and extreme environmental conditions are not defined in this SAR chapter.

This information is required by the staff to assess compliance with GDC-4, GDC-61, and the intent of 10 CFR 72.122.

Response to RAI 6-2

The referenced statement in Section 6.0 has been revised/supplemented as follows:

"The objective of structural analyses is to ensure that the integrity of the STC and HI-TRAC is maintained under design, normal, and accident conditions, including extreme environmental phenomena such as flood, earthquake, and tornado wind as defined in Subsection 3.2.3. There are no off-normal events defined in this LAR that adversely affect the structural performance of the STC or HI-TRAC."

NRC RAI 6-3

Revise the reference to "Environmental" load (refer to page 6-3)(SMMB).

Section 6.1.2 states, "Principal design criteria for the design basis, normal condition, and the accident/environmental loads are discussed in Sections 3.2 and 3.3. In this section, the loads, load combinations, and the required structural performance of the STC and the HI-TRAC under the various loading events are presented."

However, Section 3.3 does not exist in the report.

Remove misleading words and revise, as appropriate, the first sentence of Subsection 6.1.2 to read similar to: "Principal design criteria for the design basis, normal condition, and accident loads are discussed in Section 3.2."

This information is required by the staff to assess compliance with GDC-4, GDC-61, and the intent of 10 CFR 71.122.

Response to RAI 6-3

The first sentence of Subsection 6.1.2 has been revised as follows:

"Principal design criteria for the design basis, normal condition, and accident condition loads are discussed in Section 3.2."

NRC RAI 6-4

Clarify the lift load design criteria (refer to page 6-5)(SMMB).

Section 6.1.2.2 states, "However, for conservatism the primary stresses in STC and the HI-TRAC components in the lift load path are set to meet the smaller of 1/10 of the material ultimate strength and 1/6 of the material yield strength under a normal handling condition."

The subject statement should be consistent with the Item 1 description of SAR Subsection 6.2.3, which refers to ANSI N14.6 as the basis for the proposed stress limits for the lifting load path evaluation.

Revise this statement, as appropriate, to recognize that ANSI N14.6 is implemented for the lifting load path evaluation.

Section 8.5.3.3 states, "All special lifting devices shall be maintained and inspected in accordance with ANSI N14.6." NUREG 1567 and ANSI N14.6 require preservice testing of 150 percent of the maximum service load if a dual-load path is employed or at 300 percent of the service load if a single-load path is used.

In Section 9.1.2.1 of the HI-STORM FSAR (Revision 4 of Report HI-2002444, Section 3.4.8.2.1), the applicant has committed to the 300 percent acceptance test.

Provide evidence that this condition is met for the IP Fuel Transfer.

This information is required by the staff to assess compliance with GDC-61, and the guidance in NUREG-0800 15.7.5, RG 1.183, and the intent of 10 CFR 72.122.

Response to RAI 6-4

The referenced statement in Section 6.1.2.2 has been revised as follows:

"However, for conservatism the primary stresses in the STC and the HI-TRAC interfacing lift points, under normal handling conditions, are limited to the smaller of 1/10 of the material ultimate strength and 1/6 of the material yield strength as specified in ANSI N14.6 [B.S]."

The testing and acceptance requirements for the HI-TRAC lifting trunnions will continue to apply to the wet fuel transfer campaigns. Specifically, the testing requirements in Section 9.1.2.1 of the HI-STORM FSAR will continue to apply to the HI-TRAC. The STC lifting trunnions will also be tested at 300% of the maximum design lifting load in a similar manner to the HI-TRAC. Section 8.5.3.3 of Holtec report HI-2094289 has been revised to indicate the testing requirements for the HI-TRAC and STC lifting trunnions.

NRC RAI 6-5

Clarify/Revise the Allowable Stress material properties (refer to pages 6-7 and 6-8)(SMMB).

Tables 6.1.3 and 6.1.4 in Section 6.1.2.2 illustrates the Maximum Allowable Stress and Primary Stress for SA-564, 630 and SA-193, B7 bolt materials.

Primary stresses must be defined in stress categories to facilitate bolt structural evaluation. The tables seem to suggest that only the membrane stress is evaluated for the closure bolts. Therefore, it is unclear as to whether shear and bending stresses must also be considered in the closure bolt evaluation.

Revise Tables 6.1.3 and 6.1.4 to also recognize stress allowables for the complete primary stress categories, including membrane and bending stresses and bending and shear stress interaction equations, for the STC and HI-TRAC 100D closure bolts evaluation.

This information is required by the staff to assess compliance with GDC-61, and the intent of 10 CFR 72.122.

Response to RAI 6-5

As Appendix XI of the ASME Code Section III on pressure vessel flange design specifies, the allowable stress applicable to the bolting material in pressure vessels is the direct axial stress. Shear and bending effects in the body bolts of pressure vessels are second order effects that are neglected in the stress analysis.

NRC RAI 6-6

Clarify the "prestressed" state of the closure bolts (refer to pages 6-11 and 6-12)(SMMB).

Section 6.2.1.1 states, "The bolts shall be prestressed to the corresponding maximum resultant load."

Clarify the statement and provide an evaluation of bolt structural integrity, including fatigue damage and thread overstress failure modes, as related to the applied bolt torque and load induced tensile, bending, and shear stresses (see the structural RAI regarding the fatigue for the STC closure bolts).

This information is required by the staff to assess compliance with GDC-61 and the intent of 10 CFR 72.122.

Response to RAI 6-6

To insure a leak tight seal under all normal and hypothetical accident loading conditions (including a non-mechanistic tip over of the HI-TRAC with the STC inside), the STC closure bolts shall be prestressed to the maximum allowable stress per Table 3 of ASME Section II, Part D, which is given in Table 6.1.3. Appendix XII of the ASME Code (see XII-1100(c) and XII-1100(d)) permits the use of an initial bolt stress that equals (or even exceeds) the maximum allowable stress given in Table 3 of ASME Section II, Part D, provided that yielding of the bolts does not occur. There is no risk of yielding the STC closure bolts since the maximum allowable stress for the bolts is less than 50% of the yield strength of bolt material (SA-564 630 H1100).

Furthermore, the closure joint in the STC employs the controlled compression design (explained in the pressure vessel literature such as Reference A). A Holtec position paper (Reference B) provides a concise description of this design concept whose principal benefit, as explained in the Holtec proprietary reference is to essentially eliminate any significant cycling of the bolt stress due to pulsations in the operating condition loads.

NRC RAI 6-7

Verify the Design Basis Earthquake (DBE) is applicable to loading/unloading zones of the IP Fuel Transfer (SMMB).

Section 6.2.6 and 6.2.7 discusses the seismic stability of the loaded VCT and HI-TRAC, as well as the seismic stability of the STC in the fuel pool.

It is unclear if the DBE is amplified at the location of loading/unloading of the STC into the HI-TRAC and the HI-TRAC onto the VCT during the IP Fuel Transfer.

Define and evaluate the applicable seismic stability loading and unloading conditions for the loading/securing a loaded STC and HI-TRAC onto the VCT, as well as the loading/securing of the STC into the HI-TRAC.

This information is required by the staff to assess compliance with GDC-1, GDC-2 and GDC-4, and the guidance in NUREG-0800 9.1.5; NUREG-0612 (Appendix C); NUREG-0554; ASME NOG-1 (2004), and the intent of 10 CFR 72.122.

Response to RAI 6-7

The seismic stability analyses of the freestanding equipment for all applicable fuel transfer evolutions have been carried out using the appropriate seismic excitation for the supporting surface on which the equipment is staged. The ZPA of the design basis earthquake for IP3 at the ground elevation (54.5') is listed in Table 3.2.2 of the Holtec Licensing Report HI-2094289. Since the spent fuel pit, the truck-bay and the travel path adjacent to the truck-bay are all located at the ground level, the same earthquake is applicable.

For completeness, the input seismic data for all configurations in HI-2094289 are provided below:

Design Basis Earthquake (ZPAs)	Horizontal: 0.15g's Vertical: 0.10g's

<u>References cited in responses to Chapter 6 RAIs:</u>

A. Mechanical Design of Heat Exchangers And Pressure Vessel Components by K.P.Singh and A.I.Soler (Chapter 3), Arcturus Publishers, 1984.

B. Holtec position paper DS-337, "Mechanics of Sealing Action in a Controlled Compression Flanged Joint".

CHAPTER 7 – SHIELDING DESIGN AND ALARA CONSIDERATIONS

NRC RAI 7-1

Provide the calculation that justifies the leak rate value used during testing for the STC (confinement boundary), employing the methodology from ANSI 14.5 for normal, off-normal and accident conditions. The percent of spent fuel postulated to fail for these conditions typically is 1%, 10% and 100%, respectively. (TCB)

This methodology should identify the complete source term associated with the fuel and crud, determination of the A2 for this mixture, and finally calculation of a referenced leak rate. Also, refer to NUREG/CR-6487, "Containment Analysis for Type B Packages Used to Transport Various Contents," for description of methodology to determine a leak rate test value. Also refer to NRC's Division of Spent Fuel Storage and Transportation (SFST), Interim Staff Guidance

(ISG) - 5, Revision 1. It does not appear credit can be provided by the HI-TRAC cask because it is not part of the confinement boundary.

This information is needed for the NRC staff's review to ensure compliance with the criteria contained in GDC 61 and 10 CFR Part 50, Appendix B, Criterion III, Design Control. Also, ASME Code, Section III, NCA-4000, Article 4134.3(a) references ASME NQA-1, where in Supplement 3S-1, Section 3.1, it states that design analyses such as physics, stress, hydraulic, and accident shall be performed in a planned, controlled, and correct manner.

Response to RAI 7-1

Justification of the selected leak rates is provided by a) performing calculations of the effluent dose contribution; b) adding those effluent doses to the direct dose rates for occupational doses, doses to the public and site boundary doses; and c) demonstrating that those doses are acceptable and/or meet the regulatory dose limits when the effluent doses are included. These analyses are documented both in Chapter 7 and in the supporting shielding calculation package (HI-2084109). The percent of spent fuel postulated to fail in those analyses is selected to be 1% (normal), 10% (off-normal) and 100% (accident). However, for the off-normal condition of the break-down of the VCT during the transfer, 1% fuel failure is assumed because this event does not result in a loading condition on the fuel that could result in additional fuel failure beyond what is assumed for normal conditions.

In the revised methodology, the complete source term associated with the fuel (gas, fines, and volatiles) and crud is considered. The methodology follows that of the confinement analysis used in earlier revisions of the HI-STORM FSAR, where leakage of the MPC was assumed to be credible. This is consistent with the methodology in NUREG/CR-6487, except that a dose rate is calculated from the actual source terms, instead of a leakage rate from a comparison of the actual source terms with the A2 limits. This approach is considered acceptable because the STC, unlike a spent fuel transportation package, never leaves the IPEC protected area during inter-unit fuel transfer operations.

Credit is taken for the HI-TRAC as a pressure vessel under normal conditions, since the HI-TRAC is leak tested at the beginning of the transfer and there is no credible event during the short duration of a normal inter-unit fuel transfer that would compromise this seal. However, for off-normal conditions (10% fuel rod breach), and for accident conditions (100% fuel rod breach), no credit is taken for hold-up of radionuclides in the HI-TRAC, although the structural and thermal analyses demonstrate that the integrity of the HI-TRAC is not compromised even under those conditions.

This is a conservative approach that meets or exceeds the intent of all relevant regulatory and guidance documents.

NRC RAI 7-2

Evaluate the source terms for spent fuel fines and crud in the calculation for determining the referenced leak rate and effluent dose evaluation. (TCB)

The applicant in Section 7.4.6 "Effluent Dose Evaluation" states that only gases were considered. This assumption does not appear to be conservative in that discharge from a failure of the spent fuel would result in discharge of fines and volatiles, in addition to gases, into the STC water. These fines could remain suspended in the water due to the vibration

associated with movement of the STC and could be available for release. Since the STC water could be pressurized and the temperature above 212 °F (100 °C), that would supply the energy to expel the fines past the confinement boundary.

This information is needed for the NRC staff's review to ensure compliance with the criteria contained in GDC 61 and 10 CFR Part 50, Appendix B, Criterion III, Design Control. Also, ASME Code, Section III, NCA-4000, Article 4134.3(a) references ASME NQA-1, where in Supplement 3S-1, Section 3.1, it states that design analyses such as physics, stress, hydraulic, and accident shall be performed in a planned, controlled, and correct manner.

Response to RAI 7-2

Crud, fines, gases and volatiles have been considered in a revision to the dose analysis required as a result of this RAI. Section 7.3.1 of HI-2084109, Revision. 6 [L.G], as well as Section 7.4.5 (previously Section 7.4.6) of Chapter 7 have been expanded to include cruds, fines and volatiles. Table 7.4.6 of Chapter 7 presents the isotope inventory including their activity and release fraction used for dose calculations from effluent release.

NRC RAI 7-3

Section 4.7.5.3, "Effluent Dose Evaluation," of Attachment 1 to the July 8, 2009, letter from Entergy (ADAMS Accession Number ML091940177) states that the atmospheric dispersion factor (χ/Q value) used in the dose assessment is analyzed for a distance of 100 meters, based upon Regulatory Guide (RG) 1.145, "Atmospheric Dispersion Models for Potential Accident Consequence Assessments at Nuclear Power Plants." Section 4.7.5.3 further states that this distance is also consistent with 10 CFR 72 and that use of the χ/Q value resulted in dose values "so low that this utilized distance is sufficient for the current case." Table 7.4.4, "Analysis Inputs for Effluent Dose Release Analysis," of Enclosure 2 to the July 8, 2009 letter lists the χ/Q value as 8.0×10^{-3} s/m^3. (AADB)

a. NRC staff notes that RG 1.145 does not recommend a specific distance (e.g., 100 meters) for which a χ/Q value should be calculated. Further, while 10 CFR 72.106, "Controlled area of an ISFSI or MRS," states that the nearest boundary of the controlled area must be at least 100 meters, it does not state that a distance of 100 meters is necessarily adequate. Therefore, was the distance of 100 meters chosen because it bounds the minimum source to receptor distance for all potential receptors? Please provide a list of the receptor locations and minimum distances of separation between the fuel and receptor locations for each limiting effluent dose receptor (e.g., control room air intake/operator, exclusion area boundary). Provide a scaled site drawing showing true north, which highlights the source and receptor locations, including the transit route of the fuel, from which distance and direction inputs can be approximated. Also, please provide the scale of the drawing.

b. RG 1.145 provides a methodology for calculation of χ/Q values based on meteorological data representing 1 hour averages, which are then used as a basis for determining χ/Q values for other, longer, time periods. Table 7.4.5 of Enclosure 2 to the July 8, 2009, letter provides a summary of estimated doses for three time periods, namely, 8 hours, 30 days, and an instantaneous release. For what time period was the χ/Q value of 8.0×10^{-3} s/m^3 calculated? Was this χ/Q value the result of an initial calculation or is it generated from another χ/Q value? What are the bases for use of this single χ/Q value? Were

calculations made for other χ/Q values and the value of 8.0 x 10^{-3} s/m^3 found to be limiting for all receptors and time periods applicable to this license amendment request?

c. Please provide a description of the methodology, assumptions, and inputs used to calculate all of the χ/Q values that were assessed to result in selection of the value of 8.0 x 10^{-3} s/m^3. What are the bases of selection for each input? If a computer code was used to perform the calculations, please provide an electronic copy of input files (e.g., meteorological data) sufficient to permit verification of the χ/Q values.

Response to RAI 7-3

a) Two separate acceptance criteria have been considered in a revision of the shielding calculations, namely 10 CFR 72 and 10 CFR 20. 10 CFR 72.104 and 10 CFR 72.106 regulations are used for the dose rates at or beyond the controlled area boundary. 125 m distance is conservatively used from the inter unit transfer for this purpose. Section 7.4.6, Haul Path and Site Boundary, is added in Chapter 7 with a detailed description of the owner controlled boundary and the justification of 125 m as the conservative site boundary assumption. Tables 7.4.12, 7.4.13.a, 7.4.13.b, and 7.4.14 in Chapter 7 manifest that the 10 CFR 72.104 and 10 CFR 72.106 regulations can be met at a distance of 125 m from the transfer.

   10 CFR 20.1301 regulations are used for an individual member of public, who is not a licensed worker. These regulations can be met at a distance of 20 m from the haul path as shown in Tables 7.4.10, 7.4.11.a, and 7.4.11.b of Chapter 7. There are several receptor locations in the facility. The control room is at a distance greater than 20 m from the haul path. Licensed workers could be located anywhere from 2 to 20 m from the haul path during the transfer operation. Workers in the buildings within the facility will be at a distance larger than 20 m from the transfer operation. In Chapter 7 of the licensing report, the site map with different site features including the ISFSI and the haul path is shown in Figure 7.4.1. Figure 7.4.2 depicts the exclusion area boundary (not to scale) by dotted red lines for an individual member of public. Individual member of public will be administratively restricted outside this 20 m exclusion area boundary from the haul path. Figure 7.4.3 presents the building identification plan showing true north, and a scaled site map of the terrain is shown in Figure 7.4.4. The dose analyses for both controlled area boundary and member of public include contributions from effluent releases, direct dose, the ISFSI, and the operating plants.

b) χ/Q values have been recalculated in a revision of the dose analyses for IPEC inter unit transfer operation. The methodology from Regulatory Guide 1.145 is used to determine the χ/Q for normal, off-normal and hypothetical accident conditions at different distances by using Equations 1, 2 and 3 from Regulatory Guide 1.145. These short term χ/Q are deemed conservative for normal (8 hours), off-normal (30 days) and hypothetical accident (30 days) evaluation periods. Section 7.3.6 of HI-2084109 rev. 6 [L.G] contains in detail the equations and the input parameters used for this χ/Q calculation. Table 7.4.9 of Chapter 7 presents χ/Q values for various distances and conditions used in this dose analysis.

c) The χ/Q values are calculated by using the methodology and assumptions delineated in RG 1.145. More specifically the equations 1, 2, and 3 are used to evaluate χ/Q for both normal and accident conditions. The following Table presents all the input parameters and their basis used in this calculation. This calculation is performed in an Excel

spreadsheet. Section 7.3.6 of HI-2084109 rev. 6 discusses the detailed calculation methodology with all the equations used.

Parameter	Normal/Off-Normal			Accident	Basis
	Distances, m				
	1	20	125	125	N/A
Stability	D			F	ISG-5
U, m/s	5			1	ISG-5
σ_y, m	4	5	10.1	5.5	Figure 1 of 1.145
σ_z, m	2.5	3	5.5	2.75	Figure 2 of 1.145
M	1.20			4	Figure 3 of 1.145
$\Sigma_y = M\,\sigma_y$	4.8	6	12.12	22	1.145
A, m^2	8.94				Holtec Drawing 6013, Rev 8
χ/Q, sec/m^3	5.31E-03	3.54E-03	9.55E-04	5.26E-03	N/A

NRC RAI 7-4

In Section 7.4.6 of the license amendment request, entitled Effluent Dose Evaluation, the licensee asserts that "Doses from submersion in the plume are neglected because they are shown in [K.A] [HI-2002444, Latest Revision, "Final Safety Analysis Report for the HISTORM 100 Cask System", USNRC Docket 72-1014] to be small compared to inhalation doses." (AADB)

The NRC staff has performed confirmatory dose consequence analyses to verify the dose values shown in LAR Table 7.4.5, "Dose from Effluent Release at 100 Meters." Based on the NRC staff's preliminary results, it appears that the dose contribution from Krypton 85 (Kr-85) was not included in the reported dose values. While the contribution from Kr-85 may not be limiting in the accident analyses, it may not necessarily be negligible, especially in the evaluation of the total effective dose equivalent (TEDE) for the instantaneous accident release.

Please provide additional information describing the basis of the statement that "Doses from submersion in the plume are neglected because they are shown in [K.A] to be small compared to inhalation doses." Please include a numerical analysis showing the calculated submersion dose and an explanation of why its inclusion in the doses shown in Table 7.4.5 is not necessary.

Response to RAI 7-4

Appendix C of HI-2084109, Revision 6 shows that submersion doses are small compared to inhalation doses. In addition, Table 7.4.8 of Chapter 7 compares submersion doses and inhalation doses at the site boundary for normal, off-normal and accident conditions. This table also demonstrates that the dose from submersion in the plume is small compared to the inhalation doses. However, Doses from submersion in the plume were considered as an effluent contribution to the site boundary dose (125 m) in the new revision of the shielding report. Due to

negligible contribution, the submersion doses are not considered for the dose to an individual member (at 20 m) of public and in the occupational dose calculations.

Dose contribution from Krypton 85 was included and the available curie per assembly for Kr-85 was presented in Table 7.4.4 of Chapter 7. Kr-85 is also included as gas in this revision of the licensing chapter as shown in Table 7.4.6 of Chapter 7. Additionally, in this revision cruds, fines and volatiles are also considered and their available curies per assembly are presented in Table 7.4.6 of Chapter 7.

NRC RAI 7-5

Evaluate the azimuthal variation of dose rates around the loaded STC and the loaded HI-TRAC and describe how fuel transfer operations (as described in Report HI-2094289) account for this variation to keep doses ALARA. (CSDAB)

The STC basket is designed with an inner and an outer region of fuel cells. The outer cells are for fuel with less decay heat. However, the outer cells do not completely shield the inner cells; thus, dose rates around the loaded STC and around the loaded HI-TRAC can have significant variations. The applicant should provide an evaluation of the dose rate variations due to this regionalized loading configuration. The evaluation should describe the azimuthal dose rate variations at the STC and HI-TRAC surfaces and anticipated worker distances from the cask. The applicant should also describe how operations with the loaded STC and the loaded HI-TRAC consider this variation in maintaining occupational doses ALARA.

This information is needed to confirm compliance with 10 CFR 20.1101(b), 10 CFR 50.90 and 50.34a(c) and the intent of 72.104(b) and 72.126(a).

Response to RAI 7-5

Evaluations of azimuthal dose variations are performed for the surface of the STC, at 0.5 m from the surface of the STC, and for the surface of the HI-TRAC. The azimuthal variations at distances greater that 0.5 m from the STC surface will be negligible. The highest dose rates are reported in Chapter 7 for the surface and 0.5 m from the STC taking into account the azimuthal variations. Azimuthal variation of the dose rates on the surface of the HI-TRAC is also considered and is found to be comparable with the surface doses. Cylindrical tallies as shown in Figures 7.3.1 and 7.3.3 of Chapter 7 are used for this purpose. Sections 7.3.1.1, 7.4.3, and 7.4.4 of Chapter 7 are expanded to address this concern. As the azimuthal variations are considered in the dose rates calculations, they are also automatically incorporated in the occupational dose calculations presented in Table 7.4.15 of Chapter 7 to keep doses ALARA.

NRC RAI 7-6

Modify Chapter 10, "Operating Procedures," and Chapter 7, "Shielding Design and ALARA Considerations," in Report HI-2094289 to include operations involving the new Bottom Missile Shield (BMS) and dose evaluations of those operations. (CSDAB)

In response to NRC's Request for Supplemental Information (RSI) questions 1.a and 1.c (Section A of the request), the applicant introduced a BMS to protect the HI-TRAC's pool lid-to-bottom flange seal from a tornado missile. However, it is not clear how this shield is to be used, such as when it is installed and when it is removed from the HI-TRAC during the fuel transfer

operations. The occupational dose evaluations need to be updated to account for operations with the BMS, as appropriate (e.g., for installation of the BMS on a loaded HI-TRAC).

This information is needed to confirm compliance with 10 CFR 20.1101(b), 10 CFR 50.90 and 50.34a(c) and the intent of 72.104(b) and 72.126(a).

Response to RAI 7-6

The BMS will be installed prior to each fuel transfer campaign and removed after the campaign is over when no fuel is present in the system. Therefore there will not be any occupational dose associated with the installation or removal of the BMS from the spent fuel assemblies in the STC. However, there may be small dose contribution from the plant facilities as the HI-TRAC is stored inside radiation controlled area.

Additionally, the dose rates near the bottom of HI-TRAC are calculated and are presented in Tables 7.4.3 and 7.4.4 of Chapter 7.

NRC RAI 7-7

Clarify the specifications of the STC's allowable non-fuel hardware (NFH) contents and loading restrictions, providing appropriate supporting evaluations. (CSDAB)

The application indicates that NFH may be transferred with the fuel in the STC, and a shielding evaluation including analysis for burnable poison rod assemblies (BPRAs) was provided as part of the response to staff's RSI. However, the specifications and limits for the allowable NFH remain unclear. The applicant needs to provide the following information: the types of NFH to be transferred, their radiation source terms (including source strength) and the basis for these specifications, the allowable numbers of the NFH types, the acceptable STC basket cells, and the burnup and decay time specifications.

Additionally, it is not clear that the shielding evaluation with BPRAs is bounding for a loaded STC (or HI-TRAC) containing NFH. The applicant should provide an evaluation with the bounding NFH source and justify the evaluation to be bounding, considering the NFH specifications described in the preceding paragraph and the STC configuration. For example, HI-STORM 100 shielding analyses have indicated that axial power shaping rods (APSRs) or control rod assemblies (CRAs) can have significantly higher source terms than the analyzed BPRAs. While limiting placement of these NFH types to the inner basket cells provides some shielding, similar to what was for MPCs, the STC basket configuration has less shielding of its inner cells than the MPCs due to fewer basket cells and outer cells not completely surrounding inner cells (see also RAI 7-1). This is particularly the case for APSRs. Additionally, neutron source assemblies need to be addressed if they too are to be transferred.

This information is needed to confirm compliance with 10 CFR 20.1101(b), 20.1301(b), 10 CFR 50.90, and 50.34a(c), and the intent of 72.104, 72.106(b) and 72.126(a).

Response to RAI 7-7

Inter-unit transfer operations may include fuel containing non-fuel hardware (NFH) in the form of burnable poison rod assemblies (BPRAs) including wet annular burnable absorbers (WABAs), control rod assemblies (CRAs), neutron source assemblies (NSAs), and thimble plug devices (TPDs). Axial Power Shaping Rods (APSRs) are not used in the IP3 reactor. The allowable

NFH contents and loading restrictions are presented in Section 7.2.2 of Chapter 7. The dose rates in Tables 7.4.1 through 7.4.5 of Chapter 7 are presented with and without NFH. The highest dose rates are used for the site boundary and dose to an individual member of public calculations taking into account the presence of NFH in the STC. The presence of the NFH is also accounted for in the occupational dose calculations presented in Table 7.4.15 of Chapter 7. Restrictions on the transfer of NFH are included in the proposed Appendix C LCO 3.1.2.

NRC RAI 7-8

Specify the following regarding the response to the RSI (question 3.a of Section B of the request) that discusses the dose rate measurements taken upon removal of the STC from the spent fuel pool and their use (i.e., their comparison to predetermined, expected values and performance of further evaluations if the measurement results exceed these values). (CSDAB)

a. the number of measurements and relative locations of the measurements, including their basis. The measurements should be sufficient in number and appropriate in location to serve the purpose for which they are used.

b. the predetermined, expected values that will be used in making these comparisons and the values' basis. The values may be based upon the actual loaded contents for a particular transfer operations or the evaluation with design basis contents. In any case, the values should be based upon a loaded STC in the same configuration as that for which measurements will be performed.

c. the actions that will be taken if the expected dose rate values are exceeded (e.g., by 25%, 50%, 100%, etc.) and at what values the STC will be unloaded and the contents re-loaded to lower dose rates to within the expected values.

Similar information should also be given regarding the measurements taken on the HI-TRAC that are described in the operating procedures (Section 10.2.3, Step 33 of HI-2094289).

This information is needed to confirm compliance with 10 CFR 20.1101(b), 10 CFR 50.90, 50.34a(c) and the intent of 72.104.

Response to RAI 7-8

The computed dose rates around the STC are presented in Tables 7.4.1 and 7.4.2 for regionalized and uniform loading, respectively. Step 18 on page 10-13 of Chapter 10 specifies the radiological survey of the STC lid. Step 19 on page 10-14 delineates the required procedures if the measured dose rates exceed expectations or the calculated values presented in Table 7.4.1 (representative loading pattern).

Dose rates on the surface of the STC itself are relatively high. Therefore, in order to minimize exposure time and occupational dose, the STC will be moved directly into the HI-TRAC after removal from the spent fuel pool with no personnel in the immediate vicinity who are not needed for this operational evolution. Because there will be dose measurements taken on the HI-TRAC before movement outdoors, there is limited value added by taking dose rate measurements on the side of the STC and the dose received by the radiation protection personnel who would take these measurements would be unnecessary. It would therefore not be consistent with the ALARA philosophy to require dose rate measurements of the sides of the loaded STC.

Once the STC is placed in the HI-TRAC, dose measurements will be taken and compared to the maximum permitted. A minimum of four (4) dose rate measurements shall be taken on the side of the HI-TRAC approximately at the cask mid-height plane. The measurement locations shall be approximately 90 degrees apart around the circumference of the cask. Dose rates shall be measured between the radial ribs of the water jacket. Measured dose rates will be compared with calculated dose rates for the design basis fuel to ensure they are less than the expected dose rates presented in Table 7.4.3 of Chapter 7. If the dose rates are greater than the expected dose rates the records will be verified and if necessary the STC will be returned to the pool and unloaded in accordance with Chapter 10 of the licensing report.

NRC RAI 7-9

Include dose rate measurements on the STC side as part of the measurements described in the inter-unit transfer operating procedures and RSI response, considering the information in RAI 7-8 in determining what measurements will be necessary. (CSDAB)

It is not clear that measurements on the STC lid alone are sufficient to fulfill the purposes of the dose rate measurements described in the operating procedures. For example, some mis-loaded contents (e.g., some NFH) may not be detectable at the STC lid because their source is distributed in the lower areas of the cask. Additionally, transfer operations personnel will be present around the side of the cask (when in the HI-TRAC and nearby when the STC is raised from the spent fuel pool) as well as around the STC top during the various transfer operations. Similarly, appropriate measurements should be performed on the loaded HI-TRAC as part of the measurements described in the operating procedures (Section 10.2.3, Step 33 of HI-2094289).

This information is needed to confirm compliance with 10 CFR 20.1101(b), 10 CFR 50.90 and 50.34a(c) and the intent of 72.104.

Response to RAI 7-9

Because the dose rates on the side of the STC are expected to be relatively high, the movement of the loaded STC into the HI-TRAC transfer cask takes place without interruption and with only the minimum number of personnel present to complete the operation. This is appropriate given the ALARA philosophy and the limited benefit of taking STC dose rate measurements. Dose rate measurements on the HI-TRAC are performed to detect any anomaly and actions taken as appropriate for the anomaly (Chapter 10). Please also see the response to RAI 7-8.

NRC RAI 7-10

Provide dose evaluations that clearly demonstrate compliance with the regulatory dose limits for members of the public. (CSDAB)

These evaluations should include all direct radiation and effluent contributions (i.e., from transfer operations and site facilities, including routine plant operations and the ISFSI). It is not clear that this is done for all the evaluations (e.g., the 20.1301(a) and (b) evaluations). The evaluations should also include off-normal conditions or anticipated occurrences for transfer operations. The applicant should also describe the haul path and site features such as the ISFSI, the site boundary, the Part 20 controlled area and restricted area, the controlled area defined for 72.104 evaluation purposes, the ISFSI's Part 72 controlled area boundary, and the minimum distances from the haul path to these various boundaries, providing a site map to

illustrate these and other relevant features. Realistic occupancy factors should be used in determining the maximum doses to real members of the public. The bases for these factors should be described and consider any member of the public that may reside, work, or recreate in or near the areas addressed for the various evaluations. Estimates of effluent contributions should be determined using appropriate, conservative parameters for the distances from the loaded STC, loaded HI-TRAC, and site facilities. For example, estimates based upon parameters for distances of 100 meters are not appropriate for distances such as at the haul path's restricted area boundary.

Estimated doses for these evaluations should be based upon the appropriate dosimetry concepts and dose factors for the respective regulatory limits. For example, the estimated annual doses to the highest exposed real members of the public in the general environment (outside the site boundary), and the annual doses to on-site members of the public located within either the 10 CFR 20 controlled area or restricted areas should be based on ICRP-2 dosimetry concepts and dose factors (e.g., Regulatory Guide 1.109). Doses determined for members of the public in the general environment outside the site boundary (in accordance with 10 CFR 20.1301(e)) should be estimated for the whole body, thyroid, and other (highest) organ. In addition, estimated annual doses to on-site members of the public in the controlled and restricted areas should be based on total effective dose equivalent (in accordance with 10 CFR 20.1301(a) and (b)). For this calculation, dose factors provided in the Environmental Protection Agency's (EPA's) Federal Guidance Report No. 11 are acceptable.

Staff notes that some information regarding dose estimates was supplied in the application and in supplemental information submitted in response to the acceptance review letter. However, it is not clear if and how this information is used or its applicability for demonstrating compliance with dose regulations. Staff also notes that SFST's ISG-13 provides useful guidance for 10 CFR 72.104 evaluation purposes.

This information is needed to confirm compliance with 10 CFR 20.1301(a), 20.1301(b), 20.1301(e), 10 CFR 50.90, and 50.34a(c) and the intent of 72.104 and 72.126(d).

Response to RAI 7-10

The dose estimate for members of the public including direct radiation, effluent contributions, ISFSI dose contribution and the site contribution from the operating plants for normal and off-normal conditions at 20 m have been evaluated and added to Chapter 7 of the licensing report. Section 7.4.7 and Tables 7.4.10, 7.4.11.a, and 7.4.11.b of Chapter 7 present these evaluations. Doses from submersion have been neglected for the member of public exposure because they are shown in Table 7.4.8 to be small compared to inhalation doses. The requirements of 10 CFR 20.1301(a) and (b) have been considered. The requirements of 10 CFR 20.1301 can be met at a distance of 20 m therefore an exclusion area will be established to keep members of the public at a distance greater than 20 m from the haul path.

A revised controlled area boundary at 125 meters is used for the transfer operation as the site boundary for 10 CFR 72.104 and 10 CFR 72.106 evaluations. In Chapter 7 of the licensing report, the site map with different site features including the ISFSI and the haul path is shown in Figure 7.4.1. Figure 7.4.2 depicts the exclusion area boundary (not to scale) by dotted red lines for an individual member of public. Individual member of public will be administratively restricted outside this 20 m exclusion area boundary from the haul path. Figure 7.4.3 presents the building identification plan showing true north, and a scaled site map of the terrain is shown in Figure 7.4.4 (also see response to RAI 7-3). Section 7.4.6 (haul path and site boundary) is added with a detail description of the owner controlled boundary and the justification of 125 m

as the conservative site boundary. 10 CFR 72 regulations are used for the site boundaries because they are more restrictive than the 10 CFR 100 requirements and result in a conservative evaluation.

For direct dose rates estimation from the cask the flux to dose conversion factors used in these shielding calculations are taken from ANSI/ANS 6.1.1-1977 [B.U]. This conversion is done internally in MCNP. The comparisons between dose rates calculated with the ANSI/ANS and the ICRP factors have been performed for one of Holtec's transportation casks (HI-STAR 60 calc package 71-9336). Those analyses showed little difference between dose rates with the different factors. It is therefore considered sufficient to only use the ANSI/ANS factors. Dose conversion factor (DCF) from EPA Federal Guidance Report No. 11, Table 2.1 and EPA Federal Guidance Report No. 12, table III.1 are used for the effluent release calculations.

NRC RAI 7-11

Include the effluent contribution to the occupational dose estimates for the transfer operations. (CSDAB).

Occupational dose is derived from direct radiation and effluents, or releases, from the loaded STC/HI-TRAC. The effluent contribution should be determined based upon parameters appropriate for the transfer operations personnel locations.

This information is needed to confirm compliance with 10 CFR 20.1101(b), 10 CFR 50.90 and 50.34a(c) and the intent of 72.104.

Response to RAI 7-11

The effluent contribution to the occupational dose has been considered as shown in Section 7.3.11 of HI-2084109, Revision 6. The effluent contribution to the occupational dose rates (1 m from the HI-TRAC) is 4E-06 mrem/hr for normal condition. Because the effluent contribution is much smaller than that from direct radiation it was not accounted for the occupational doses presented in Table 7.4.15 of Chapter 7.

NRC RAI 7-12

Update all affected tables in the shielding evaluation and supporting documents to account for NFH dose rate/dose contributions. (CSDAB)

In response to staff's RSI, the applicant modified its evaluation to address NFH; however, some of the evaluation results, including occupational dose estimates, were not modified. The applicant should ensure that all affected items are appropriately modified to account for NFH.

This information is needed to confirm compliance with 10 CFR 20.1101(b), 10 CFR 50.90 and 50.34a(c) and the intent of 72.104(a) and 72.106(b).

Response to RAI 7-12

All dose rates, including dose to an individual member of public, at the controlled area boundary, and occupational dose rates, are updated to include NFH in Chapter 7 of the licensing report.

NRC RAI 7-13

Modify the dose analysis for off-normal events to account for breaching of 10% of the fuel rods. (CSDAB)

As described in the RAI on the fraction of rods assumed breached, the off-normal conditions should be analyzed for 10% of the fuel rods breaching. Dose estimates for off-normal conditions should be modified to account for this fraction of rods being breached.

This information is needed to confirm compliance with 10 CFR 50.90 and 50.34a(c) and the intent of 72.104(a).

Response to RAI 7-13

Dose estimates for off-normal conditions have been added to account for the 10% fuel rod breaching (off-normal condition 2 as defined in Section 7.4.5 of Chapter 7).

NRC RAI 7-14

Justify the assembly hardware's cobalt impurity level assumed for analyses with older fuel (fuel with cooling times approximately 20 years or more) used for the dose evaluations. (CSDAB)

The applicant assumes a cobalt-59 impurity level of 1 g/kg for fuel assembly hardware, consistent with the HI-STORM 100 FSAR analyses. For the HI-STORM 100, this was accepted because the design basis calculations used assemblies cooled for only a few years and therefore would have been made after efforts were begun to reduce cobalt impurity levels in assembly hardware materials. Additionally, evaluations showed that the cobalt source strengths of older assemblies with higher impurity levels were approximately equivalent to that of younger fuel, given the older assemblies longer decay time. The current application, however, uses older fuel (decay times of 20 or more years) for some of the dose evaluations. Using this lower impurity level would be non-conservative for those dose evaluations. Based upon PNL-6906, Vol. 1, older assemblies could have as much as an impurity level of 2.2 g/kg in the steel hardware. This higher impurity level could have a significant effect on dose rates, particularly in the top, upper cask side, and bottom areas of the cask. The shielding evaluation should use appropriate cobalt impurity levels in the assembly hardware and adequately justify the selected impurity levels. This justification could include any available information regarding measurements of the composition of the assembly hardware used by the IP3 assembly manufacturer(s). The applicant should also consider whether the appropriate impurity level is used for the NFH source determination, providing appropriate justification.

This information is needed to confirm compliance with 10 CFR 20.1101(b), 10 CFR 50.90 and 50.34a(c) and the intent of 72.104 and 72.106(b).

Response to RAI 7-14

The PNL-6906 report is from 1989 and it pertains to fuel assemblies fabricated prior to 1989. The shielding calculation has assumed maximum cooling time of 20 years. However, most of the calculations including site boundary and dose to the public are performed conservatively

using 5 years cooling time. Hence the shielding calculations assume newer assemblies compared to the assemblies in the PNL report. The primary source of activity in the non-fuel regions of an assembly is the activation of Co-59 to Co-60. The Co-60 has a relatively short half-life of 5.3 years. Therefore, older assemblies (assemblies fabricated prior to 1989) would have a longer cooling time that would more than offset any increase in the cobalt content. The same impurity level (1g/kg) is assumed for the NFH (Please see Section 7.2.2 of the licensing report).

NRC RAI 7-15

Justify use of the selected source terms in the regionalized loading scheme and the bounding nature of the dose rates and dose estimates using these sources. (CSDAB)

The application should provide an evaluation of the bounding dose rates and provide bounding dose estimates to demonstrate the ability to comply with the regulatory requirements for shielding and radiation protection for the design of the inter-unit transfer equipment and the allowable contents. A regionalized loading pattern is used for some dose evaluations in the application. It is not clear that the selected sources for these evaluations are bounding for the proposed allowable contents. Evaluations with the bounding sources provide an indication of the dose rates (and thus the doses) that can occur during transfer operations and enable proper ALARA planning as well as provide for demonstration that transfer operations with all proposed allowable contents will meet the regulations. Staff also notes that information available to it regarding the IP3 discharged fuel indicates there are a significant number of assemblies with enrichments below the minimum enrichments assumed for their respective burnups in the evaluation. The evaluation and justification should account for these lower enrichments for their respective burnup ranges.

This information is needed to confirm compliance with 10 CFR 20.1101(b), 10 CFR 50.90 and 50.34a(c) and the intent of 72.104.

Response to RAI 7-15

The bounding source term (loading pattern 2 in Table 7.1.1 of Chapter 7 of the licensing report) is used to conservatively estimate the dose rates to an individual member of public (on-site) and at the site boundary. The bounding source term is also used to calculate doses around the STC and HI-TRAC containing the STC as presented in Tables 7.4.2, 7.4.4 and 7.4.5 of the licensing report. The loading of this bounding loading pattern is not permitted by the maximum heat load restriction. As specified in Table 5.0.1 of the licensing report the total heat load for the inner four cells of the STC basket is 4420.8 watts, whereas the total heat load for the outer eight cells is 5200 watts. The representative regionalized loading pattern 1 is bounded by the maximum allowable heat load of the STC basket as shown in Table 7.1.1 of Chapter 7. Section 7.1 is expanded to explain this loading restriction. Therefore, the loading pattern 1 (Table 7.1.1) is used to calculate the occupational doses presented in Table 7.4.15.

NRC RAI 7-16

Justify the homogenization of the fuel assembly with the moderator in the shielding model. (CSDAB)

While staff has accepted the practice of homogenizing the fuel assemblies in previous dry storage cask applications, the evaluations for regulatory compliance in those applications have

relied upon design basis calculations with the cask interior dry. The current application relies upon calculations with the STC basket flooded with moderator. It is not clear that homogenization, in the case of the current application, is appropriate when considering that subcritical multiplication, and thus the neutron dose rates, may be significantly underestimated. The neutron dose rates are a significant portion of the overall dose rates from the STC and HI-TRAC. Justification should include an evaluation of the impacts on source terms and dose rates.

This information is needed to confirm compliance with 10 CFR 20.1101(b), 10 CFR 50.90 and 50.34a(c) and the intent of 72.104 and 72.106(b).

Response to RAI 7-16

A study was performed on the loaded HI-TRAC only to verify that the fuel homogenization approach is still applicable when STC is flooded with moderator. Neutron dose rate calculations with and without subcritical multiplication are performed for the side surface of the HI-TRAC to study the effect of fuel and moderator homogenization. Results from the input files without subcritical multiplication are multiplied by $\frac{1}{1-k_{eff}}$, where k_{eff} is 0.95 and compared to the results from a standard MCNP input.

The HI-TRAC side surface dose rate for the standard MCNP inputs is 1.17 mrem/hr. The HI-TRAC side surface dose rate for the MCNP inputs without subcritical multiplication is 1.09 mrem/hr. Therefore, it can be seen that the result for both cases are comparable and a fuel homogenization approach is still appropriate when STC is flooded with moderator to calculate neutron doses on the STC and HI-TRAC surface. This study is documented in Appendix D of HI-2084109, Revision 6.

NRC RAI 7-17

Justify the dose estimates for the transfer operations personnel considering the non-conservatisms in the shielding models for the STC and HI-TRAC. (CSDAB)

The applicant uses the dose rates from around the radial surface of the STC and the HI-TRAC to provide estimates of occupational exposures, including for operations around the STC and HI-TRAC top surfaces. However, it is not clear that these dose rates are appropriate or conservative for the operations around the top surfaces, especially in light of the actual cask configuration, which differs from the model due to various non-conservative simplifying assumptions. For example, the current models have the lead shielding in both the STC and HI-TRAC extending from their bases to their lids, replacing the steel of their top flanges. The HI-TRAC is also modeled with the neutron shield extending from its base to its lid. Additionally, the loaded HI-TRAC is modeled with the lid in place and extending out to cover the neutron shield and the annulus water at a height that is about 9 inches greater than that described in the package operations chapter of the inter-unit transfer report (HI-2094289). In some operations, the HI-TRAC lid will not be in place. Thus, due to axial differences in the shielding configuration, it is not clear that axial mid-height dose rates are conservative for all operations. The applicant should also justify its conclusion that the non-conservatisms do not affect dose rates at distance.

This information is needed to confirm compliance with 10 CFR 20.1101(b), 10 CFR 50.90 and

50.34a(c) and the intent of 72.104(b).

Response to RAI 7-17

The dose models have been revised to be more realistic and to avoid any potential non-conservatisms. Section 7.3 of Chapter 7 has been expanded in this regard.

NRC RAI 7-18

Clarify the following items: (CSDAB)

a. the reported surface dose rates (STC and HI-TRAC) are from surface detectors or point detectors, explaining the basis if from the former
b. the 72.106(b) evaluation dose rates use the same source as the 72.104(a) evaluation, explaining the basis for using a different source if not the same
c. the dose condition description for the operations steps in Table 7.4.6 of the inter-unit transfer report (the report), the description is unclear and/or appears to be inconsistent with operations descriptions and shielding models
d. the correct values and title for Table 7.4.2 of the report; the title doesn't match the loading pattern description given for this table in Section 7.4.4 of the report, and some values are inconsistent with the comparable table in the supporting calculation package
e. the correct correlation between dose rate tables and operation steps for dose estimates in Table 7.4.6 or the report and its companion table in the supporting calculation package; doses for some steps appear to be described as being derived from an incorrect table per the footnote on the companion table in the calculation package.
f. The dose rate and dose calculations at distance include contributions from the cask (STC or HI-TRAC) lid as well as its side; calculations at distance should include all appropriate contributions

This information is needed to confirm compliance with 10 CFR 20.1101(b), 1301(a) and (b), 10 CFR 50.90 and 50.34a(c) and the intent of 72.104 and 72.106(b).

Response to RAI 7-18

a) Surface detectors are used for average surface doses, while ring and point detectors are used for all other purposes (away from the cask).

b) The same source was used for both the evaluations

c) All the major operation steps from Chapter 10 are now used for the occupational dose calculations in Table 7.4.15 (previously 7.4.6).

d) The subject items have been corrected.

e) The subject items have been corrected.

f) Contributions from the cask lid as well as the sides are considered for the dose rate calculations at distances from the cask. Note that in the revised licensing report the HI-TRAC is conservatively modeled without the lid installed.

NRC RAI 7-19

Modify the application to address the potential for streaming through the vent and drain ports on the STC. (CSDAB)

Spent fuel canisters usually have some kind of feature to reduce streaming through vent and drain ports. The technical drawings do not show such a feature for the STC; therefore, the vent and drain ports represent streaming paths through the STC lid. The applicant should address streaming through these ports as part of the shielding and radiation protection evaluation and make appropriate modifications to operations descriptions (e.g., including ALARA warnings and cautions for operations involving and occurring around the vent and drain ports).

This information is needed to confirm compliance with 10 CFR 20.1101(b), 10 CFR 50.90 and 50.34a(c) and the intent of 72.104(b).

Response to RAI 7-19

The design of the vent and drain ports in the lid have been modified mostly due to considerations other than shielding. However, for those modifications, special attention was given to reduce streaming through the ports. Shield blocks as shown in the design drawings are employed to reduce the streaming through the vent and drain port. The dose rates for vent and drain ports are shown in Table 7.4.1 and Table 7.4.2 of Chapter 7. ALARA Notes are added to subsections 10.2.1, 10.2.3, and 10.4.1 to inform personnel that there is streaming from these areas

CHAPTER 8 – MATERIALS EVALUATION, ACCEPTANCE TESTS and MAINTENANCE PROGRAM

NRC RAI 8-1

Justify the testing performed on the entire STC confinement boundary. (TCB)

The entire confinement boundary should be pressure tested in accordance with ASME Section III, Subsection NB or NC requirements. The acceptance criteria for the ASME pressure test would be no visual leakage after the pressure had been maintained for a minimum of 10 minutes.

Additionally, the entire confinement boundary should be leak tested in accordance with the guidance of ANSI 14.5-1997 to verify compliance with the design leak tightness as determined in RAI 7-1, above. This leak testing should be performed initially at the fabrication facility and periodically (within 12 months prior to each use) to ensure that the containment leak tightness has not deteriorated over time. The leak testing done at the time of loading fuel is usually less stringent and is done to ensure that the gaskets are properly seated and the containment has been assembled properly, and typically is checked to be at least 1E-3 ref-cm^3/sec.

It isn't clear from the application whether or not the seals are replaced after every use, but it should be made clear that if the seals are replaced then the leak test should confirm that the design leak tightness as determined in RAI 7-1, above, is in agreement with the guidance of ANSI 14.5-1997.

This information is needed for the NRC staff's review to ensure compliance with the criteria contained in GDC 61 and 10 CFR Part 50, Appendix B, Criterion IX- Test Control.

Response to RAI 8-1

Section 8.4.3 of the licensing report has been revised to more clearly define that the STC pressure boundary shall be subject to a hydrostatic pressure test at the factory to demonstrate that it meets the acceptance criteria of ASME Code Section III, Subsection ND, Article 6000. Section 8.4.4 of the licensing report has been revised to more clearly define the factory leakage test per ANSI N14.5-1997 and the periodic leakage test of the lid gaskets that is performed during loading operations, also per ANSI N14.5-1997. Table 8.5.1 identifies the replacement schedule for all the seals.

NRC RAI 8-2

Revise the design to specify bolted closure plates with O-Rings (or equivalent confinement capability) and associated testing procedures for the vent and drain valves to ensure a positive testable closure for this portion of the confinement boundary. (TCB)

Valves are not typically considered part of the confinement boundary given the potential for leakage. In addition, the current design configuration with protruding valves above the closure lid could result in damage from errors handling the STC. In addition, it is not clear from the information provided whether these valves are tested to meet design leak tightness requirements.

This information is needed for the NRC staff's review to ensure compliance with the criteria contained in GDC 61 and 10 CFR Part 50, Appendix B, Criterion IX- Test Control.

Response to RAI 8-2

The STC lid has been redesigned to recess the vent and drain connections into the lid utilizing bolted cover plates with an O-ring seal over the vent and drain ports. Recessing the valves into the lid eliminates the concern about protruding valves potentially being damaged due to handling errors. The cover plate O-ring seal will ensure positive and testable vent and drain port closures for the containment system. Each cover plate seal will be leakage tested in accordance with ANSI N14.5-1997. The licensing report has been revised to specify that the cover plates will be leak tested prior to transfer. The leak testing of the lid cover plate has been added to section 8.4.2 of the licensing report.

NRC RAI 8-3

Justify and provide details of the pressure testing and leak testing performed on the entire HI-TRAC pressure fluid boundary. (TCB)

The HI-TRAC should be pressure tested before its use, as an ASME Code vessel. Because the HI-TRAC has a bolted bottom flange that is subjected to the deadload of the STC and its contents during transfer, the pressure test should replicate this normal configuration. Besides performing the pressure test to the ASME Code required factor of the HI-TRAC's design pressure, this test pressure should be increased by an amount equivalent to the maximum weight of the STC and its payload, and tested in the transfer orientation to apply this maximum loading to the HI-TRAC's bottom flange. As currently described in HI-2094289, it appears only

the top seal of the HI-TRAC is leak tested. The bottom seal needs to be similarly tested. The entire fluid boundary should be checked for leakage after each loading.

This information is needed for the NRC staff's review to ensure compliance with the criteria contained in GDC 61 and 10 CFR Part 50, Appendix B, Criterion IX- Test Control.

Response to RAI 8-3

The operations chapter of the licensing report (section 10.1.2) has been revised to clarify that the pressure test of the pool lid gasket joint includes provisions to address the weight of the STC as required by the maintenance program (section 8.5.2). The HI-TRAC pool lid joint will be pressure tested either by supporting the HI-TRAC with loaded STC by the bottom flange such that the STC load is supported by the pool lid bolts, or by increasing the test pressure such that the load on pool lid accounts for the STC weight. As required by the maintenance program the pool lid joint will only be tested once every twelve months or if the pool lid joint is unbolted. Testing of the pool lid joint is not required for each transfer because the pool lid is not removed during the transfer from Unit 3 to Unit 2. The HI-TRAC top lid will be leak tested prior to each fuel transfer.

NRC RAI 8-4

Provide information on the specific material compounds and manufacturing data that validates the elastomeric seals will perform under the cyclic operating conditions specified for the STC and HI-TRAC system. Provide quantified parameters for the critical performance characteristics of the seal that are qualitatively specified in Section 8.2, and demonstrate that selected seal(s) meet these critical performance characteristics. (TCB)

HI-209428 generally states that silicone, neoprene, and similar elastomers may be used. Supplemental response 6m also states that silicone will be used and the temperature limit is 248 °F with no basis for this determination to be found in the generic description of the seals. A specification of material compounds and parameters is required to ensure seal integrity during repetitive use during normal and off-normal conditions, as well as potential accident events. The critical performance characteristics should include time-dependent temperature conditions with stress-relaxation effects, as well as other chemical, physical, and nuclear impacts on the confinement seals.

This information is needed for the NRC staff's review to ensure compliance with the criteria contained in GDC 61.

Response to RAI 8-4

The critical material characteristics of the seals described in the response to RAI 3-1 above have been added to Chapter 8 (Table 8.2.2) of the licensing report. Supplier data sheets (Attachment D) for candidate material are attached that show the material specifications that meet the requirements above. Additional information supporting the use of the candidate materials can be found in the Parker O-ring handbook and in the Sandia Laboratory report "Performance Testing of Elastomeric Seal Materials Under Low- and High- Temperature Conditions, Final Report" SAND94-2207, printed in June of 2000 and submitted under USNRC Docket # 71-9336.

NRC RAI 8-5

Clarify the conditions that may affect sealing capability and require replacement as specified in Section 8.5 of the maintenance program for the seals. Clarify the replacement frequency for the seals and verify that the procedures are consistent with the validation of the seal performance as discussed in the RAI 8-4 above. (TCB)

This information is needed for the NRC staff's review to ensure compliance with the criteria contained in GDC 1 and 61.

Response to RAI 8-5

Conditions that may affect sealing capability of O-ring seals are indications of cuts, tears, or flat spots in the seal itself and gouges and scratches in the sealing surfaces. Cuts, tears, or excessive deformation (flat spots that reduce the seal compression below 50% of the nominal design value) would require seal replacement. Gouges in the seal surface would require repair. Scratches that run radially across the seal joint may require polishing to allow for the seal to function properly. The seals would be suitable for reuse, provided that compression set has not caused them to develop flat spots. An elastomer that has a 25% compression set could be used 3 times before the compression would fall below 50% of the initial value. The structural analysis demonstrates that the bolted joint does not unload from metal to metal contact for all accident conditions, so that reuse of the seals for two or more transfers is expected. Excessive compression set would be identified during the leak testing of the seal prior to transfer operations. Failure of the leak test in the absence of defects in the metal sealing surfaces would require seal replacement. At a minimum, the seals will be replaced every 6 transfers.

Conditions that may affect sealing capability of gasket seals are indications of cuts, tears, loss of compressibility in the seal itself and gouges and scratches in the sealing surfaces. Cuts and tears would require seal replacement. Loss of compressibility would result in seal leakage and would require seal replacement. Gouges in the seal surface would require repair. Scratches that run radially across the seal joint may require polishing to allow for the seal to function properly. Failure of the leak test in the absence of defects in the metal sealing surfaces would require seal replacement. At a minimum, the seals will be replaced at the start of the loading campaign.

NRC RAI 8-6

The September 28, 2009, supplemental letter states that periodic surveillance of the Metamic in the STC is unnecessary. However, all of the plants cited in your letter as precedents for wet storage application of Metamic are committed to surveillance programs that include neutron attenuation testing on a pre-defined schedule. Diablo Canyon is the only exception because their temporary cask is only licensed for three operating cycles. Since our initial review of Metamic in 2003 (see the NRC Safety Evaluation, ADAMS Accession No. ML031681432), the NRC staff has required applicants to perform periodic surveillance of their Metamic. Since the STC will experience a unique service environment including wet, dry, hot and cold conditions the staff concludes that periodic surveillance of the Metamic to ensure it is capable of performing its intended function is even more important than in the currently licensed spent fuel pool applications. The effects of the cyclic environment on the Metamic in the STC over a long service life are unknown. Given that the Metamic in the STC is clad in stainless steel, visual inspections will not be possible, nor would they provide indication of the neutron attenuation capabilities of the Metamic. For this reason the staff feels that a periodic surveillance program using in-situ neutron attenuation testing of a representative sample of the Metamic panels in the

STC would provide reasonable assurance that the Metamic maintained the ability to perform its intended function over the service life of the cask, including the prevention of neutron streaming. Considering the above discussion, please provide your plans for ensuring the neutron attenuation capability of Metamic over the service life of the STC. If a surveillance program will be employed, please provide the proposed interval between samples, the number of samples taken during each surveillance, the specific test method used and the acceptance criteria. (CSGB)

Response to RAI 8-6

A surveillance program will be implemented to monitor the performance of Metamic by installing bare coupons near the maximum gamma flux elevation around the STC fuel basket (see the STC licensing drawing 6013). The surveillance specification has been incorporated into the licensing report as Section 8.5.3.5. A surveillance program based upon coupon testing has been selected over in situ testing in order to better monitor the performance of Metamic by direct reading of physical and neutron attenuation characteristics of the Metamic in repeatable locations without potential interference from the basket assembly. Coupon testing of Metamic is a common practice in wet storage applications for monitoring for Metamic degradation.

NRC RAI 8-7

Justify the lack of fatigue analysis and service life of 240 cycles for the STC closure bolts (refer to page 8-13)(SMMB).

RSI response (Attachment 1 to NL-09-100, dated September 28, 2009) 6.b states that, "The resulting cyclic loading produces stresses that are well below the endurance limit of the canister's materials, and therefore, will not lead to a fatigue failure in the STC. However, the applicant does not quantify the allowable stresses of the STC closure bolts after 240 cycles, or indicate the tracking process of accounting for this time limit.

Report HI-2084118, appendix B evaluates the STC baseplate, the shell, the closure lid, and associated connections under the design internal pressure and lifting scenarios. Report HI-2084118 indicates that the bolts undergo a maximum stress of 24,380 psi, whereas the allowable is 28,000 psi, under the design pressure and the loads experienced during lifting.

Provide an evaluation of STC closure bolt structural integrity, including fatigue damage and thread overstress failure modes (tensile, bending, and shear), as related to the applied bolt torque and load.

This information is required by the staff to assess compliance with GDC-61 and the intent of 10 CFR 72.122.

Response to RAI 8-7

The tensile stress in the STC closure bolts and the shear stress in the threads under the STC design pressure and gasket seating load are evaluated in Appendix B of Holtec report HI-2084118 Rev. 3 and summarized in Section 6.2.1.1 of the Holtec Licensing Report HI-2094289. The STC closure bolts are not subject to any significant bending stress (see response to RAI 6-5).

An analysis for failure from cyclic fatigue of the STC closure bolts was not performed because:

1. The number of cycles of loading and unloading is quite small (less than 500; 500 loading cycles translate to transfer of 6000 fuel assemblies assuming 12 assemblies in each transfer evolution). For purposes of the fatigue margin assessment, we assume the number of cycles to be 1000, i.e., N = 1000.

2. The fatigue equations (curves) for the STC closure bolts (high strength steel), originate from the 2004 ASME code (Section III, Appendix I, Figure I-9.4) and show that the allowable Sa (cyclic fatigue amplitude) is considerably larger than the actual stress amplitude due to internal pressure. The table below provides the comparison:

Component	Material	Stress Amplitude (under internal pressure) 'S' (ksi) ‡	Cyclic Fatigue Amplitude 'Sa' from Fatigue Curve @ 1000 cycles (ksi)	Ratio of Sa to Actual Stress
STC Closure Bolts	SA-564 630 H1100 or SB637 N07718	20	81	4.1

‡ Stress amplitude is one half of corresponding maximum allowable stress.

The margins indicated by the above simplified evaluation support the absence of a detailed fatigue analysis for the STC closure bolts.

NRC RAI 8-8

Justify the use of ASME Code Subsection ND for the design and testing of the STC instead of Subsection NB (SMMB).

Spent fuel canisters are normally designed and tested to Code Subsection NB or NC. The STC is designed to Subsection ND. This approach does not appear to provide the same degree of quality for a spent fuel storage or transportation canister.

This information is required for compliance with 10 CFR Part 50, Appendix A, GDC 51 and 61, and the intent of 10 CFR Part 72.122(a).

Response to RAI 8-8

The STC is a thick walled fuel transfer device (in contrast to a multi-purpose canister which is a long term storage device) that fulfills the role of a transfer cask to move the fuel between the pool and the HI-TRAC inside both IP3 and IP2 Fuel Buildings. The STC serves a key ALARA mission during the transfer of fuel between the two Fuel Buildings. Because of its thick, multi-layered wall and thick top and bottom lids, the STC also provides an additional barrier against tornado missiles during the movement of the transfer package from IP3 to IP2. Therefore, in its operational function, the STC emulates the HI-TRAC transfer cask. Like a transfer cask the STC must contain a robust level of shielding and be structurally capable of supporting the weight of its fuel payload while meeting the constraints of NUREG-0612 and Reg. Guide 3.61 stress limits. Away from the attachment region, the STC must satisfy ASME service condition A stress limits (please see HI-STORM FSAR Holtec Report HI-2002444, Section 3.4.3). Like a transfer cask, the STC is used only during short term operations; it is not intended for use as a long term storage device.

ASME Section III, Sub-Section NF has historically served as the reference code for fuel transfer equipment. Specifically, the HI-TRAC transfer cask is designated as an "NF, Class 3 plate & shell structure" with certain NRC approved "Code Alternatives", as applicable. Because the STC also serves a pressure containment function, the pressure vessel counterpart of "NF Class 3" –Subsection ND – is used as the reference Code for the STC. The selection of Subsection ND as the reference code for the STC is also suggested by the code classification of similar spent fuel pool water-bearing equipment under 10 CFR 50 (Regulatory Guide 1.26, Quality Group C). A perusal of nuclear plant FSARs indicates that the pressure vessels and heat exchangers that store, heat, cool or convey fuel pool water are classified as either ASME Section III Subsection ND or Section VIII Division 1 (Regulatory Guide 1.26, Quality Group D).

The typical ASME codes used to qualify a storage canister (Subsections NB or NC) were not preferred compared to Subsection ND for the transfer canister because cyclic fatigue, a core concern of such codes, is not a credible source of failure for the STC (please see response to RAI 6-1 and RAI 8-7). Subsections NB and NC (NC-3200) provide design formulas for pressure that allow the vessel to be made thinner than the corresponding ND formulas do. This counterintuitive provision in the "design-by-analysis" codes, such as NB and NC, is intended to reduce the stress amplitudes in the pressure vessel under thermal cyclic conditions (because reduced wall thickness translates to reduced stress amplitudes under thermal transients). Because significant thermal transients are essentially absent from the STC and the number of mechanical loading cycles is relatively small, there is little technical imperative to use Subsection NC or NB. Code formulas in ND, as can be ascertained from ND-3324 and its peer paragraphs in NB and NC, yield greater wall thickness and hence require a thicker wall vessel. The thrust of ND, therefore, is more closely aligned with the objective of an impact-capable robust vessel design intended for the STC.

In summary, the Code assignment for the STC has been made to meet the functional and structural demands on it and to ensure that the safety margins are robust. The criteria used in the selection of the appropriate code directly pertain to the structural demands on the component. Equipment subject to a large number of severe thermal transients, for example, is placed within the ambit of NB or NC (NC-3200) to insure that a complete fatigue analysis is performed and that such qualification is not constrained by the rigidly prescribed wall thickness calculations (thinner walls often produce smaller thermal stresses). Subsections NB and NC also assist the designer in the effort to reduce wall thicknesses by allowing a smaller factor of safety against the ultimate strength than Subsection ND. Since neither minimizing the wall thickness nor an immunity from a large cycle fatigue (both applicable to an MPC) is a governing consideration for the STC (the thermal cycles are small in number and in amplitude) Subsection ND was determined to be the most appropriate reference code for the STC.

NRC RAI 8-9

Related to the previous question, show how the brittle fracture performance of the steels selected for the STC shell will provide an equivalent level of quality or safety as for austenitic stainless steels designed under subsection NB (SMMB).

This information is required for compliance with 10 CFR Part 50, Appendix A, GDC 51 and 61, and the intent of 10 CFR Part 72.122(a).

Response to RAI 8-9

Austenitic stainless steels do not undergo a ductile-to-brittle transition at temperatures above 0°F (i.e., lowest service temperature (LST) for STC). As a result, austenitic steels are exempt from impact testing under ASME Section III. The same assertion cannot be made a priori for the STC that contains ferritic steel parts. ASME Section III provides guidance for impact testing of ferritic material to provide assurance that brittle fracture will not occur when equipment is used at temperatures within the design limits.

The STC inner and outer shells are fabricated from SA-516 Grade 70 carbon steel, which is the same material used for the HI-STORM overpack and HI-TRAC transfer cask inner and outer shells licensed for storage under 10 CFR 72. In addition, the LST for the STC has been set at 0°F, which equals or exceeds the LST for the HI-STORM overpack and HI-TRAC transfer cask. Thus, the steel selected for the STC shells (SA-516 Gr. 70) will provide an equivalent level of safety against brittle fracture as for the HI-STORM and HI-TRAC shells. The analysis to establish protection from brittle fracture consistent with that described in Subsection 3.1.2.3 of the HI-STORM 100 FSAR has been performed and documented in Section 8.3.ii of the licensing report (HI-2094289).

NRC RAI 8-10

Discuss the types and frequency of STC and HI-TRAC interior inspections. (SMMB)

Section 8.5.3 discusses STC and HI-TRAC exterior inspections but is silent regarding the possible degradation and inspection of the STC and HI-TRAC interiors.

This information is required for compliance with 10 CFR Part 50, Appendix A, GDC 1 and 61, and the intent of 10 CFR Part 72.122(a).

Response to RAI 8-10

Section 8.5.3 of the licensing report has been revised to include additional details regarding the interior inspections of the STC and HI-TRAC. Prior to each loading campaign, the STC internals will be visually inspected for evidence of gross damage to the basket and neutron absorber sheathing that may affect criticality control. Missing or torn sheathing and/or neutron absorbers will be evaluated for effects on criticality control. Inspections will be conducted and findings will be identified and resolved in accordance with Entergy's Corrective Action program.

Prior to each loading campaign, the interior surface of the STC shell and the interior surface of the HI-TRAC body and lid will be visually examined for surface denting, surface penetrations, overlay cracking, and chipped or missing coatings. The acceptance criteria for the thermal spray or weld overlay on the STC internals will be the same as used for the initial acceptance, which is that the coating must cover the entire surface of the STC and must be free of macroscopic pores and hide-out ridges. Inspections will be conducted and findings will be identified and resolved in accordance with Entergy's Corrective Action program.

NRC RAI 8-11

Describe how the lead sheet shielding material of the STC is installed to avoid gaps at the edge of the sheets which could result in radiation streaming. (SMMB)

It is not clear from the drawings or SAR description how the butt joints of the lead sheets are arranged or how the shielding at the STC bottom and top to sidewall corners is arranged to avoid gaps in the shield.

This information is required for compliance with 10 CFR Part 50, Appendix A, GDC 61, and the intent of 10 CFR 72.126.

Response to RAI 8-11

The lead sheet shielding is installed in layers in the quadrants formed by the ribs, top flange, and base plate. The lead is cut slightly oversized for the area to be filled. It is positioned in the cavity and tapped down tight against the corners using an edging tool that causes excess material to bend upwards. The excess is trimmed using a chisel to keep the lead tight against the steel. If there are gaps between the lead and steel, they are filled with lead wool that is pounded down into the gap to remove any voids. If multiple sections are used to make a layer, they are butted up tight against one another and any gaps are filled with lead wool as described above. If multiple sections are used to make the layers, the joints between the sections are staggered to eliminate any potential streaming paths. Section 8.4.5 of the licensing report has been revised to include this discussion.

CHAPTER 10 -OPERATING PROCEDURES

TECHNICAL SPECIFICATIONS

The NRC staff's approach is that normally there is a Certificate of Compliance (CoC) for a spent fuel cask system, and the CoC cannot be revised without prior NRC approval. As this licensing action is being done under Part 50, there is no CoC. Therefore, all the cask system requirements which would normally be located in the CoC must now be located in the Part 50 license (which includes Technical Specifications). The staff is willing to discuss proposals on how to accomplish this.

Response

Consistent with the NRC maintaining control of Part 72 CoC type information for a spent fuel cask system, Entergy proposes to include such information, where appropriate, within the Part 50 license mainly within a newly proposed Appendix C to the facility operating license, "*Inter-Unit Fuel Transfer Technical Specifications*." Appendix C is proposed to have two parts; Part I provides a description of the spent fuel transfer canister and transfer cask designs, and Part II provides the limiting conditions of operation, surveillance requirements, design features, and programs. In addition, a description of inter-unit fuel transfer will be added to the UFSAR of each unit in accordance with the requirements of 10 CFR 50.34 and 50.71.

NRC RAI 10-1

State how the proposed TSs meet the regulatory requirements of 10 CFR 50.36. (ITSB)

The TSs are derived from the plant safety analyses. Proposed revisions to TS must provide continued assurance that all assumptions, restrictions, and requirements of plant safety analyses will be met.

The proposed new TSs, Unit 2 TS 3.7.15, "Shielded Transfer Canister (STC) Unloading," and Unit 3 TS 3.7.18, "Spent fuel Assembly Transfer" contain no restrictions on STC water level, water boron concentration, air gap, pressure, or temperature.

Response to RAI 10-1

The four criteria in 10 CFR 50.36(c)(2)(ii) have been reviewed for applicability to the inter-unit fuel transfer operation. Criterion 1, which applies to installed instrumentation that is used to detect, and indicate in the control room, a significant abnormal degradation of the reactor coolant pressure boundary (RCPB) does not apply to the inter-unit fuel transfer because no such RCPB instrumentation is involved in the activity. Criterion 4, which applies to a structure, system, or component which operating experience or probabilistic risk assessment (PRA) has shown to be significant to public health and safety also does not apply to the inter-unit fuel transfer because no operating experience or PRA is available to determine risk significance of this activity to public health and safety.

Criteria 2 and 3, which pertain to initial conditions and mitigating systems, structures and components for design basis accident or transients that present a challenge to a fission product barrier have been considered for applicability.

10 CFR 50.36 Technical Specifications requires that the TS include limiting conditions of operation (LCO). LCOs specify the lowest functional capability or performance levels of equipment required for safe operation of the facility. The ACTIONS associated with an LCO state Conditions that typically describe the ways in which the requirements of the LCO can fail to be met. Specified with each stated Condition are Required Action(s) and Completion Times(s). The Completion Time is the amount of time allowed for completing a Required Action. Required Actions must be completed prior to the expiration of the specified Completion Time. An ACTIONS Condition remains in effect and the Required Actions apply until the Condition no longer exists or the System is not within the LCO Applicability.

Inter-unit fuel transfer operations may be subdivided into three distinct operations, namely, loading operations, transfer operations, and unloading operations. Potentially LCOs could apply to each of these operations. However, for the reasons discussed below LCOs are appropriate for loading and unloading operations only:

a) During loading and unloading operations surveillances can be performed on the process variables, design features, or operating restrictions that define the lowest functional capability or performance levels required for safe operation of the facility. Accordingly, appropriate Actions, Conditions, Required Actions, Completion Times, and Surveillances can be established in these operational modes, and LCOs are proposed for STC water boron concentration, Spent Fuel Assembly Transfer, STC pressure rise and STC unloading.

b) During transfer operations surveillances cannot be performed on the process variables, design features, or operating restrictions that define the lowest functional capability or performance levels required for safe operation of the facility in this operational mode. During transfer operations these parameters are STC orientation in the HI-TRAC, the STC water level and leak rates, and the HI-TRAC water level and leak rates. Each of these parameters must be verified once prior to their mode of applicability (transfer operations).

Accordingly, LCOs have not been established for these parameters. Rather, to ensure that the safety analyses remain valid during transfer operations, these parameters and their associated acceptance criteria are specified in Appendix C TS "*Design Features*" 4.1.4.

The safety analyses performed in support of this application are fully described in the licensing report. In order to ensure that the initial conditions and mitigation design features assumed in these safety analyses will be met during the inter-unit transfer of fuel, certain LCOs, Design Features and Programs are imposed as detailed in the proposed Appendix C to the Operating License "*Inter-Unit Fuel Transfer Technical Specifications*". These restrictions are further discussed below.

STC Boron Concentration

STC boron concentration is restricted by proposed Appendix C TS LCO 3.1.1 and associated Bases B 3.1.1.

STC boron concentration ensures, in part, that the criticality analyses described in Chapter 4 of the licensing report remain valid. The existing Unit 3 Appendix A Technical Specification 3.7.15 "*Spent Fuel Pit Boron Concentration*" requires a minimum boron concentration of 1000 ppm. That value bounds, with little margin, the STC criticality analysis boron concentration required in the event of a misload of a fresh fuel assembly (Licensing Report, Table 4.7.4). In addition, the existing Unit 2 Appendix A Technical Specification 3.7.12 "*Spent Fuel Pit Boron Concentration*" requires a minimum boron concentration of 2000 ppm. Therefore, in order to provide additional STC criticality margin in the event of a fresh fuel assembly misload, and to eliminate any dilution concerns when the STC is placed in the Unit 2 pool, a separate STC boron concentration Technical Specification is proposed. Appendix C TS LCO 3.1.1 "*Shielded Transfer Canister (STC) Boron Concentration*" specifies a minimum boron concentration of 2000 ppm.

The concentration of dissolved boron in the STC satisfies Criterion 2 of 10 CFR 50.36.

STC Loading

Spent fuel assembly transfer from the Unit 3 pool to the STC is restricted by establishing fuel assembly limits and location requirements by proposed Appendix C TS LCO 3.1.2 and associated Bases B 3.1.2.

Placement control of fuel assemblies within the STC ensures, in part, that the criticality analyses described in Chapter 4 of the licensing report remain valid. Storage locations within the STC are restricted to ensure the k_{eff} of the STC will always remain less than or equal to 0.95 during normal operations, assuming the STC to be flooded with unborated water. Fuel assemblies not meeting the criteria of proposed Appendix C TS LCO 3.1.2 "*Shielded Transfer Canister (STC) Loading*" may not be loaded into in the STC.

The configuration of fuel assemblies in the STC satisfies Criterion 2 of 10 CFR 50.36.

STC Pressure Rise

STC pressure is restricted by proposed Appendix C TS LCO 3.1.3 and associated Bases B 3.1.3.

In the original application it was proposed that the misload of a high decay heat fuel assembly would be detected by the strategic positioning of temperature elements within the STC. High STC water temperatures would have been indicative of a fuel misload. It is now proposed to detect the subject misload(s) utilizing STC pressure measurements as discussed in Chapter 5 of the licensing report. For a design basis STC decay heat load the thermal analyses of Chapter 5 predict an STC pressure rise of no more than 4.2 psi (Table 5.3.3) 24 hours after the STD lid is torqued, the open space above the STC water is filled with steam and the STC lid vent is closed. Therefore, in order to detect such fuel a misload(s) the STC pressure is controlled by proposed Appendix C TS LCO 3.1.3 "*Shielded Transfer Canister (STC) Pressure Rise*".

The STC pressure rise satisfies Criterion 2 of 10 CFR 50.36.

STC Unloading

STC unloading is restricted by proposed Appendix C TS LCO 3.1.4 and associated Bases B 3.1.4.

Placement of Unit 3 fuel assemblies within the Unit 2 spent fuel pool is based on existing Unit 2 Appendix A TS 3.7.13 "*Spent Fuel Pit Storage*" as specified in proposed Appendix C Technical Specification 3.1.4 "*Shielded Transfer Canister (STC) Unloading.*" Existing Unit 2 Appendix A TS 3.7.13 ensures, in part, that the requirements of 10 CFR 50.68, "Criticality Accident Requirements" will be met for both normal spent fuel pit operation and credible abnormal occurrences for the Unit 2 fuel. TS 3.7.13 also applies to placement of Unit 3 fuel within the Unit 2 spent fuel pool due to the similarity of fuel designs and operating histories as discussed in Chapter 4 of the licensing report and in response to RAI 4-27.

The configuration of fuel assemblies in the spent fuel pool satisfies Criterion 2 of 10 CFR 50.36.

STC Orientation in the HI-TRAC

STC orientation in the HI-TRAC is restricted by proposed Appendix C TS Design Feature 4.1.4.5.

Orientation of the STC within the HI-TRAC is based on the non-mechanistic tipover accident as described in Chapter 6 of the licensing report. In the tipover analysis the orientation of the STC trunnions are offset from the HI-TRAC trunnions in the angular direction by 30 degrees in order to limit the deceleration loads to within the design basis values. Therefore, in order to protect the integrity of the STC and HI-TRAC during transfer operations the STC orientation is restricted by proposed Appendix C TS 4.1.4.5.

STC Water Level

The STC water level is restricted by proposed Appendix C TS Design Feature 4.1.4.6.

STC water level prior to transfer operations is an initial condition for a design basis accident and is one aspect of ensuring that the STC pressure will remain within design limits during both normal and postulated accident conditions. The STC is an ASME Code compliant pressure vessel without a pressure relieving device. Therefore, in order to protect the integrity of the STC during transfer operations the water level in the STC is restricted by proposed Appendix C TS 4.1.4.6.

STC Leak Rate

The STC leak rate is restricted by proposed Appendix C TS Design Feature 4.1.4.7.

The consequence of an effluent dose release during normal, off-normal and accident conditions has been analyzed using the calculational methodology and assumptions discussed in Chapter 7 of the licensing report. The STC leak rate assumed for normal, off-normal, and accident conditions is 2.6×10^{-4} std-cm^3/s. Therefore, in order to ensure that the actual leak rate is less than or equal to the assumed value during transfer operations the measured leak rate is restricted by proposed Appendix C TS 4.1.4.7.

HI-TRAC Water Level

The HI-TRAC water level is restricted by proposed Appendix C TS Design Feature 4.1.4.8.

HI-TRAC water level prior to transfer operations is one aspect of ensuring that the HI-TRAC pressure will remain within design limits during both normal and postulated accident conditions. The HI-TRAC transfer cask is an ASME Code compliant pressure vessel without a pressure relieving device. Therefore, in order to protect the integrity of the HI-TRAC during transfer operations the water level in the HI-TRAC is restricted by proposed Appendix C TS 4.1.4.8.

HI-TRAC Leak Rate

The HI-TRAC leak rate is restricted by proposed Appendix C TS Design Feature 4.1.4.9.

The consequence of an effluent dose release during normal, off-normal and accident conditions has been analyzed using the calculational methodology and assumptions discussed in Chapter 7 of the licensing report. The HI-TRAC leak rate assumed for normal conditions is 1×10^{-3} std-cm^3/s. Any ability of the HI-TRAC transfer cask to prevent the release of activity under off-normal, and accident conditions is neglected. Therefore, in order to ensure that the actual leak rate is less than or equal to the assumed value during transfer operations the measured leak rate is restricted by proposed Appendix C TS 4.1.4.9.

NRC RAI 10-2

Explain how all assumptions and requirements of all the safety analyses will be met with no restrictions on STC water level, boron concentration, air gap, pressure, or temperature. (ITSB)

Response to RAI 10-2

Restrictions on STC water level (steam gap), boron concentration, and pressure are now included in the proposed Appendix C to the Operating License, "*Inter-Unit Fuel Transfer Technical Specifications*," Part II, Sections 3 and 4, as discussed above in response to RAI 10-1. The steam gap above the water in the STC is assured by proposed STC water level Technical Specification 4.1.4.6. As discussed in the response to RAI 10-1 temperature measurements are no longer required to be taken in order to detect a misload of a high decay heat fuel assembly.

NRC RAI 10-3

If all assumptions and requirements of all the safety analyses cannot be met without adding restrictions to the TSs, state how the additional Limiting Conditions for Operation, Actions, and Surveillance Requirements meet the regulatory requirements of 10 CFR 50.36. (ITSB)

Response to RAI 10-3

The safety analyses performed in support of this application are fully described in the revised licensing report enclosed with this RAI response. In order to ensure that these safety analyses will be met, restrictions have been imposed in the proposed Appendix C to the Operating License, "*Inter-Unit Fuel Transfer Technical Specifications*," Part II, Sections 3 and 4. These restrictions are described in the response to RAI 10-1.

NRC RAI 10-4

Clarify that the decay heat limits include the decay heat from both the fuel assembly and any non-fuel hardware that may be loaded with the assembly in a given basket cell, modifying the technical specifications accordingly. (CSDAB)

It is not clear that the TS limits appropriately account for decay heat from the non-fuel hardware (NFH) that may be loaded with the fuel assemblies. If the decay heat from NFH is not included, the acceptability of this condition should be justified. If the limit is meant to include the NFH contribution, the TSs should be modified to explicitly indicate this requirement.

This information is needed to confirm compliance with 10 CFR 50.90 and the intent of 72.44(c)(1).

Response to RAI 10-4

The maximum permissible decay heat in the STC fuel cell locations is the total decay heat emitted from all contents of the cell, including fuel and non-fuel hardware. The decay heat limits specified in Chapter 2 of the licensing report and included in proposed Appendix C to the Operating License Technical Specification 3.1.2 "*Shielded Transfer Canister (STC) Loading*" include non-fuel hardware. The proposed TS has been modified and now explicitly indicates this requirement.

NRC RAI 10-5

Justify that the proposed TSs with respect to the allowable STC contents are sufficient to limit the radiation source of those contents. (CSDAB)

The currently proposed TSs provide only a single maximum burnup, a single minimum decay/cooling time, and a maximum decay heat for each basket region. Thus, it appears that a decay heat limit alone is relied upon to control the radiation source for shielding. It is not clear that a decay heat limit by itself is sufficient to control the source for shielding. Different combinations of the minimum enrichment, maximum burnup and minimum cooling time parameters may generate the same decay heat but result in different shielding source terms. Thus, the applicant should provide an appropriate evaluation to justify that the proposed limits are sufficient to control the shielding source term (and hence dose rates). This evaluation should consider the enrichments, burnups and decay times of the IP3 pool inventory, providing

sufficient detail to support the basis of the evaluation including any assumptions. Instead of this evaluation, the applicant could modify the technical specifications to include minimum cooling time limits for different combinations of minimum enrichment and maximum burnup and provide supporting evaluations for the proposed limits. Staff notes that information available to it regarding the IP3 discharged fuel indicates there are a significant number of assemblies with enrichments below the minimum enrichments assumed for their respective burnups in the evaluation; thus, the applicant should account for these lower enrichments for the various burnup ranges in proposing and justifying the content limits. The applicant should also justify the lack of specifications regarding axial blankets for assemblies (including blanket lengths) and other parameters important for shielding in the TSs for the allowable STC contents.

This information is needed to confirm compliance with 10 CFR 20.1101(b), 10 CFR 50.90 and 50.34a(c) and the intent of 72.104, 72.106, and 72.44(c)(1).

Response to RAI 10-5

The maximum burnup and minimum cooling time values given in the proposed Appendix C to the Operating License TS 3.1.2 ; 55,000 MWD/MTU and 5 years, respectively; and maximum decay heat are limiting values for each fuel cell location. It has been demonstrated by Holtec in HI-STORM and HI-STAR licensing that the B&W 15x15 fuel assembly with initial enrichment of 3.6 wt% U-235 produces a bounding source term for all PWR fuel types. In addition, when establishing the burnup, cooling time and initial enrichment combinations to determine the appropriate source term to be analyzed in Chapter 7 (Table 7.1.1) of the licensing report, the IP3 fuel inventory and ORIGEN calculations were used. Using calculations from ORIGEN, it was determined that the burnup, cooling time and initial enrichment combination that would yield a realistic source term to estimate expected dose rates, and also meet the decay heat limits is the representative loading case, specified as follows:

Decay Heat Limit	Burnup	Cooling Time	Initial Enrichment
0.65 kW (8 Outer Cells)	45,000 MWD/MTU	20 years	3.6 wt% U-235
1.105 kW (4 Inner Cells)	55,000 MWD/MTU	10 years	3.6 wt% U-235

Other realistic combinations of burnup, cooling time and initial enrichment, based on the fuel in the IP3 pool, will produce source terms comparable to this representative loading case.

It is important to note that the dose rate is also reported for the bounding loading case (see below) although this combination does not meet the decay heat limits of the STC as shown in Table 7.1.1 of the licensing report.

Location	Burnup	Cooling Time	Initial Enrichment
8 Outer cells	55,000 MWD/MTU	5 years	3.6 wt% U-235
4 Inner Cells	55,000 MWD/MTU	5 years	3.6 wt% U-235

In summary, there may be many combinations of burnup, cooling time and initial enrichment for a specific decay heat from any fuel assembly. However, the representative case is considered to provide a realistic source term and dose rate that is indicative of what will be encountered in operation. Actual personnel doses received during inter-unit transfer operations are governed by 10 CFR 20 limits as monitored and controlled by the IPEC radiation work permits under

which the work will be performed. For this reason, no additional combinations are added to the proposed TS.

NRC RAI 10-6

Modify the TSs to include limits on the non-fuel hardware (NFH) that may be transferred in the STC. (CSDAB)

The applicant proposes to transfer NFH with spent fuel. The TSs should be modified to provide appropriate limits on NFH, including: the types of NFH and the number of each NFH type that may be transferred, the allowable STC basket locations for each NFH type, the minimum decay time (i.e., minimum post-irradiation cooling time), and the maximum burnup. These limits should be based upon the descriptions and evaluations of NFH in the application (see also RAI 7-3) and are important to include in the TSs to ensure that the operations are within the envelope of the analysis.

This information is needed to confirm compliance with 10 CFR 20.1101(b), 10 CFR 50.90 and 50.34a(c) and the intent of 72.104 and 72.44(c)(1).

Response to RAI 10-6

The proposed Appendix C Technical Specification 3.1.2 to the Operating License has been modified to include limits on the non-fuel hardware that may be transferred in the STC. This now includes the types of NFH, the number of each NFH type that may be transferred, the allowable STC basket locations, the minimum NFH post-irradiation cooling time and the maximum NFH burnup. These limits are based on the evaluation of NFH as presented in Sections 4.7.and 7.2 of the licensing report.

NRC RAI 10-7

Modify the TSs to include a description of the STC, including information similar to that found in a cask certificate of compliance. (CSDAB)

The applicant has proposed to transfer IP3 spent fuel to the IP2 SFP with the STC. The STC evaluations are based upon it having the design features described in the application. Changes to some STC design features could have a significant impact on the system performance. There is no 10 CFR Part 72 CoC for the STC. Thus, the TSs should include a description of the STC. This description should include features such as the configuration of the STC (e.g., it is a multiwalled (steel/lead/steel) canister for wet transfers of spent fuel from the IP3 SFP to the IP2 SFP) and the minimum thickness of lead and steel relied upon for shielding. Other features that may need to be added to the specifications include the minimum water heights in the STC and in the HI-TRAC annulus as well as the use of the Bottom Missile Shield for the inter-unit transfer. The applicant should propose a description of the STC for inclusion in the TSs and justify that this description adequately captures the STC's important design features.

This information is needed to confirm compliance with 10 CFR 20.1101(b), 10 CFR50.90 and 50.34a(c) and the intent of 72.44(c)(4), 72.104, 72.106(b), and 72.126(a).

Response to RAI 10-7

A description of the STC and HI-TRAC has been included in proposed Appendix C to the Operating License Technical Specifications Part I, Section 1.0 "*Spent Fuel Transfer Cask and Transfer Cask System.*" The description includes the configurations of the STC and HI-TRAC, the minimum thickness of lead and steel relied upon for shielding, and the use of the Bottom Missile Shield. Restrictions on process variables are specified in Appendix C to the Operating License, Part II, Technical Specifications, Sections 3 and 4. These restrictions include STC boron concentration, spent fuel assembly transfer, STC orientation in the HI-TRAC, STC water level, STC pressure, HI-TRAC water level, and STC unloading.

NRC RAI 10-8

Provide TS language which describes the critical constituents of Metamic. Also, provide language which controls/outlines the acceptance testing that will be employed to ensure the quality of Metamic production batches. (SMMB)

Previous Holtec licenses for Parts 72 and 71 have included TS items which control the critical aspects of the manufacture and testing of Metamic production batches. Replication of previously approved Metamic TS requirements would be appropriate for the STC.

This information is required for compliance with 10 CFR Part 50, Appendix A, GDC 62, and the intent of 10 CFR 72.124(b).

Response to RAI 10-8

The parameter most important for the criticality control function of the neutron absorber is the B-10 areal density, i.e. the amount of B-10 per unit area of the absorber panel (usually specified as gm B-10/cm^2). While this parameter can be measured in the final product (via neutron attenuation testing), it is not a direct input into the manufacturing process. However, the value is the mathematical product of three input and process parameters, namely the B_4C weight percent of the material, the percent B-10 in the Boron in the B_4C, and the thickness of the panel, together with an appropriate proportionality constant.

To provide a robust and conservative acceptance criteria approach, each of these three parameters is controlled independently in the manufacturing process and each parameter must independently meet a specified minimum required value.

The specific requirements are:

- All lots of B_4C will contain boron with an isotopic B-10 content of at least 18.4%.
- The B_4C content in Metamic shall be greater than or equal to 31.5 and less than or equal to 33.0 weight percent.
- The Metamic panel thickness must be greater than or equal to 0.102 inches.

Chapter 8 of the licensing report has been revised and now includes a detailed description of the Metamic manufacturing process, the acceptance criteria, and acceptance testing of production batches. The Metamic for the STC has already been manufactured in accordance

with the requirements of Chapter 8 and, therefore, TS language for the production of the Metamic has not been included.

The specific requirements for the B_4C content in Metamic, the B-10 content, and the minimum panel thickness are included in proposed Appendix C TS 4.1.2, as these are input process parameters which can be verified by a review of records.

NRC RAI 10-9

Provide TS language to limit STC movements to when the ambient temperature is in a range that will ensure ductile behavior of the materials involved (for example, at or above 0 degrees F). (SMMB)

This information is required for compliance with 10 CFR Part 50, Appendix A, GDC 61, and the intent of 10 CFR 72.122(b).

Response to RAI 10-9

The STC basket is constructed from specific types of stainless steels as described in Section 8.3 of the licensing report. These stainless steel materials do not undergo a ductile-to-brittle transition in the minimum temperature range of the STC. Movements of the STC are limited to when the ambient temperature is greater than or equal to 0°F as specified in Table 3.2.2 of the licensing report. This limit is specified in proposed Appendix C to the Operating License TS, Section 4.1.4.

RESPONSE TO RAI 8-4

ATTACHMENT B

Supplier Data Sheet for the Seal Material

Compound Data Sheet
O-Ring Division United States

MATERIAL REPORT

REPORT NUMBER: KT1557
DATE: 2/15/83

TITLE: Testing E0740-75 to ASTM D2000 5CA 715 A25 B35 F17 EA14 Z1 Z2 Z3.

PURPOSE: To document conformance.

CONCLUSION: E0740-75 is capable of meeting these requirements.

Recommended temperature limits: -70 to +250 F

Recommended For
Weather / Ozone
Auto and Aircraft Brake Fluids
Steam / Water
Dilute Acids and Bases
Ketones and Alcohols

Not Recommended For
Petroleum Oils
Mineral Oil Products

Parker O-Ring Division
2360 Palumbo Drive
Lexington, Kentucky 40509
(859) 269-2351

REPORT DATA

Report Number: KT1557

ORIGINAL PHYSICAL PROPERTIES	SPECIFICATION SCA 715 A25, B35, F17, EA14, Z1, Z2, Z3	COMPOUND E0740-75
Hardness, Shore A, pts.	75 ± 5	72
Tensile Strength, psi.	1500	1950
Elongation, %	150	165
HEAT AGED, ASTM D573		
70 HRS. @ 257°F		
Hardness Change, pts.	±15	- 2
Tensile Strength Change, %	±30	+ 6
Elongation Change, %, max.	-50	+ 9
COMPRESSION SET, ASTM D395, PLIES		
22 HRS. @ 212°F		
% of Original Deflection, max.	60	8.0
A25		
HEAT AGED, ASTM D865		
70 HRS. @ 257°F		
Hardness Change, pts., max.	+10	- 2
Tensile Strength Change, %, max.	-20	+ 6
Elongation Change, %, max.	-40	+ 9
B35		
COMPRESSION SET, ASTM D395, PLIES		
METHOD B, 22 HRS. @ 257°F		
% of Original, Deflection, max.	50	3.3
F17		
LOW TEMPERATURE BRITTLENESS		
ASTM D746, PROCEDURE B		
3 min. @ -40°F	Pass	Pass
EA14		
WATER RESISTANCE, ASTM D471		
70 HRS. @ 212°F		
Hardness Change, pts.	N.R.	+ 2
Volume Change, %	± 5	+1.4
Z1		
ORIGINAL ELONGATION SHALL BE 150% MIN.		165
Z2		
DUROMETER SHALL BE 75 ± 5		72
Z3		
MATERIAL SHALL BE SULFUR FREE, PEROXIDE CURED, CONTAINED LESS THAN 5% PLASTICIZER AND, THEREFORE, BE SUITABLE FOR NUCLEAR RADIATION SERVICE.		Pass

All tests were run on discs or dumbbells cut from .075 thick platens per ASTM D412.

ATTACHMENT 2 TO NL-10-093

PROPOSED OPERATING LICENSE CHANGES

Entergy Nuclear Operations, Inc.
Indian Point Units 2 and 3
Docket Nos. 50-247 and 50-286

1.0 PROPOSED CHANGES

Attachments 3 and 4 to this submittal contain the marked-up pages showing the specific proposed changes to the IP2 and IP3 Operating Licenses, respectively. Attachment 5 contains the proposed Operating License Appendix C Inter-Unit Fuel Transfer Technical Specifications and Attachment 6 the associated Technical Specification Bases. The latter are provided for information only.

The changes are summarized below.

1.1 IP2 Operating License Changes

The conditions of IP2 Operating License (OL) are proposed to be changed as follows:

1. OL Condition 2.B.(5) presently states:

   > ENO pursuant to the Act and 10 CFR Parts 30 and 70, to possess, but not separate, such byproduct and special nuclear materials as may be produced by the operation of the facility.

   This request proposes to modify OL Condition 2.B.(5) to state (new words in italics):

   > ENO pursuant to the Act and 10 CFR Parts 30 and 70, to possess, but not separate, such byproduct and special nuclear materials as may be produced by the operation of the facility *and Indian Point Nuclear Generating Unit No. 3 (IP3).*

2. OL Condition 2.C.(2) presently states:

   > The Technical Specifications contained in Appendices A and B, as revised ..... .

   This request proposes to modify OL Condition 2.C.(2) to state:

   > The Technical Specifications contained in Appendices A, B, and C, as revised ..... .

3. New OL Condition 2.P is proposed, which states:

   > *P. ENO may transfer IP3 spent fuel to the IP2 spent fuel pit subject to the conditions listed in Appendix C. ENO is further authorized to transfer IP3 spent fuel onto NRC approved storage casks for onsite storage by ENO and Entergy Nuclear Indian Point 3, LLC.*

4. New OL list of attachments, which states:

   > *Attachments:*
   > *Appendix A – Technical Specifications*
   > *Appendix B – Environmental Technical Specification Requirements*
   > *Appendix C – Inter-Unit Fuel Transfer Technical Specifications*

The proposed change to OL Condition 2.B.(5) affirms that fuel burned in the IP3 reactor is permitted to be transferred to, and received and possessed by IP2 under the IP2 operating license. Proposed change to OL Condition 2.C.(2) affirms that Appendix C is incorporated into the License. Proposed new OL Condition 2.P affirms that ENO may perform inter-unit spent fuel transfers subject to the conditions of Appendix C and that IP3 fuel stored in the IP2 pool may subsequently be transferred into an NRC approved storage casks for onsite storage. The proposed new identification of attachments is an editorial change.

The specific requirements and limits applicable to fuel selection, STC loading, STC and HI-TRAC preparation and testing, and STC unloading are proposed in the changes to the respective plants' Operating License and the proposed Appendix C to the Operating License *Inter-Unit Fuel Transfer Technical Specifications*. Entergy is required to comply with the plants TS by Condition 2.C.(2) in the Operating License.

1.1 <u>IP3 Operating License Changes</u>

The conditions of IP3 Operating License (OL) are proposed to be changed as follows:

1. OL Condition 2.C.(2) presently states:

   > The Technical Specifications contained in Appendices A and B, as revised ..... .

   This request proposes to modify OL Condition 2.C.(2) to state:

   > The Technical Specifications contained in Appendices A, B, and C, as revised ..... .

2. New OL Condition 2.AE is proposed, which states:

   > *AE. ENO may transfer IP3 spent fuel to the IP2 spent fuel pit subject to the conditions listed in Appendix C. ENO is further authorized to transfer IP3 spent fuel into NRC approved storage casks for onsite storage by ENO and ENIP3.*

5. OL list of attachments presently states:

   > Attachment: Changes to the Technical Specifications

   This request proposes to modify the OL list of attachments to state:

   > *Attachments:*
   > *Appendix A – Technical Specifications*
   > *Appendix B – Environmental Technical Specification Requirements*
   > *Appendix C – Inter-Unit Fuel Transfer Technical Specifications*

Proposed change to OL Condition 2.C.(2) affirms that Appendix C is incorporated into the License. Proposed new OL Condition 2.AE affirms that ENO may perform inter-unit spent fuel transfers subject to the conditions of Appendix C and that IP3 fuel stored in the IP2 pool may

subsequently be transferred into an NRC approved storage casks for onsite storage. The proposed new identification of attachments is an editorial change.

The specific requirements and limits applicable to fuel selection, STC loading, STC and HI-TRAC preparation and testing, and STC unloading are proposed in the changes to the respective plants' Operating License and the proposed Appendix C to the Operating License *Inter-Unit Fuel Transfer Technical Specifications*. Entergy is required to comply with the plants TS by Condition 2.C.(2) in the Operating License.

ATTACHMENT 3 TO NL-10-093

MARKED-UP IP2 OPERATING LICENSE PERTAINING TO INTER-UNIT FUEL TRANSFER

Operating License pages:

Page 3
Page 5a
Page 8

Entergy Nuclear Operations, Inc.
Indian Point Units 2
Docket No. 50-247

instrumentation and radiation monitoring equipment calibration, and as fission detectors in amounts as required;

(4) ENO pursuant to the Act and 10 CFR Parts 30, 40 and 70, to receive, possess, and use in amounts as required any byproduct, source or special nuclear material without restriction to chemical or physical form, for sample analysis or instrument calibration or associated with radioactive apparatus or components; — Amdt. 42 10-17-78

(5) ENO pursuant to the Act and 10 CFR Parts 30 and 70, to possess, but not separate, such byproduct and special nuclear materials as may be produced by the operation of the facility **and Indian Point Nuclear Generating Unit No. 3 (IP3).** — Amdt. 220 09-06-01

C. This amended license shall be deemed to contain and is subject to the conditions specified in the following Commission regulations in 10 CFR Chapter I: Part 20, Section 30.34 of Part 30, Section 40.41 of Part 40, Sections 50.54 and 50.59 of Part 50, and Section 70.32 of Part 70; is subject to all applicable provisions of the Act and to the rules, regulations, and orders of the Commission now or hereafter in effect; and is subject to the additional conditions specified or incorporated below:

(1) Maximum Power Level

ENO is authorized to operate the facility at steady state reactor core power levels not in excess of 3216 megawatts thermal. — Amdt. 241 10-27-2004

(2) Technical Specifications

The Technical Specifications contained in Appendices A, **B**, and ~~B,~~ **C,** as revised through Amendment No. 260, are hereby incorporated in the license. ENO shall operate the facility in accordance with the Technical Specifications.

(3) The following conditions relate to the amendment approving the conversion to Improved Standard Technical Specifications:

1. This amendment authorizes the relocation of certain Technical Specification requirements and detailed information to licensee controlled documents as described in Table R, "Relocated Technical Specifications from the CTS," and Table LA, "Removed Details and Less Restrictive administrative Changes to the CTS" attached to the NRC staff's Safety Evaluation enclosed with this amendment. The relocation of requirements and detailed information shall be completed on or before the implementation of this amendment.

O. Control Room Envelope Habitability

Upon implementation of Amendment No. 258 adopting TSTF-448, Revision 3 (as supplemented), the determination of control room envelope (CRE) unfiltered air inleakage as required by Technical Specification (TS) Surveillance Requirement (SR) 3.7.10.4, in accordance with TS 5.5.16.c.(i), the assessment of CRE habitability as required by TS 5.5.16.c.(ii), and the measurement of CRE pressure as required by TS 5.5.16.d, shall be considered met. Following implementation:

(a) The first performance of SR 3.7.10.4, in accordance with TS 5.5.16.c.(i), shall be within the next 18 months since the time period since the most recent successful tracer gas test is greater than 6 years.
(b) The first performance of the periodic assessment of CRE habitability, TS 5.5.16.c.(ii), shall be within the next 9 months since the time period since the most recent successful tracer gas test is greater than 3 years.
(c) The first performance of the periodic measurement of CRE pressure, TS 5.5.16.d, shall be within 24 months, plus the 182 days allowed by SR 3.0.2, as measured from January 4, 2007, the date of the most recent successful pressure measurement test.

P. ENO may transfer IP3 spent fuel to the IP2 spent fuel pit subject to the conditions listed in Appendix C. ENO is further authorized to transfer IP3 spent fuel into NRC approved storage casks for onsite storage by ENO and Entergy Nuclear Indian Point 3, LLC.

3. On the closing date of the transfer of the license, Con Edison shall transfer to ENIP2 all of the accumulated decommissioning trust funds for IP2 and such additional funds to be deposited in the decommissioning trusts for IP2 such that the total amount transferred for Indian Point Nuclear Generating Unit No. 1 (IP1) and IP2 is no less than $430,000,000. Furthermore, ENIP2 shall either (a) establish a provisional trust for decommissioning funding assurance for IP1 and IP2 in an amount no less than $25,000,000 (to be updated as required under applicable NRC regulations, unless otherwise approved by the NRC) or (b) obtain a surety bond for an amount no less than $25,000,000 (to be updated as required under applicable NRC regulations, unless otherwise approved by the NRC). The total decommissioning funding assurance provided for IP2 by the combination of the decommissioning trust and the provisional trust or surety bond at the time of transfer of the licenses shall be at a level no less than the amounts calculated pursuant to, and required under, 10 CFR 50.75. The decommissioning trust, provisional trust, and surety bond shall be subject to or be consistent with the following requirements, as applicable:

6. This amended license is effective as of the date of issuance, and shall expire at midnight September 28, 2013. Amdt. 118 4-21-87

FOR THE ATOMIC ENERGY COMMISSION

Original signed by
Roger S. Boyd

A. Giambusso, Deputy Director
for Reactor Projects
Directorate of Licensing

Attachments:
Appendix A – Technical Specifications
Appendix B – Environmental Technical Specification Requirements
Appendix C – Inter-Unit Fuel Transfer Technical Specifications

Date of Issuance: September 28, 1973

ATTACHMENT 4 TO NL-10-093

MARKED-UP IP3 OPERATING LICENSE PERTAINING TO INTER-UNIT FUEL TRANSFER

Operating License pages:

Page 3
Page 9

Entergy Nuclear Operations, Inc.
Indian Point Unit 3
Docket No. 50-286

(4) ENO pursuant to the Act and 10 CFR Parts 30, 40 and 70, to receive, possess, and use in amounts as required any byproduct, source or special nuclear material without restriction to chemical or physical form, for sample analysis or instrument calibration or associated with radioactive apparatus or components; — Amdt. 203 11/27/00

(5) ENO pursuant to the Act and 10 CFR Parts 30 and 70, to possess, but not separate, such byproduct and special nuclear materials as may be produced by the operation of the facility. — Amdt. 203 11/27/00

C. This amended license shall be deemed to contain and is subject to the conditions specified in the following Commission regulations in 10 CFR Chapter I: Part 20, Section 30.34 of Part 30, Section 40.41 of Part 40, Sections 50.54 and 50.59 of Part 50, and Section 70.32 of Part 70; and is subject to all applicable provisions of the Act and to the rules, regulations, and orders of the Commission now or hereafter in effect; and is subject to the additional conditions specified or incorporated below:

(1) Maximum Power Level

ENO is authorized to operate the facility at steady state reactor core power levels not in excess of 3216 megawatts thermal (100% of rated power).

(2) Technical Specifications

The Technical Specifications contained in Appendices A, **B,** and ~~B,~~ **C,** as revised through Amendment No. 241 are hereby incorporated in the License. ENO shall operate the facility in accordance with the Technical Specifications.

(3) (DELETED) — Amdt. 205 2-27-01

(4) (DELETED) — Amdt. 205 2-27-01

D. (DELETED) — Amdt.46 2-16-83

E. (DELETED) — Amdt.37 5-14-81

F. This amended license is also subject to appropriate conditions by the New York State Department of Environmental Conservation in its letter of May 2, 1975, to Consolidated Edison Company of New York, Inc., granting a Section 401 certification under the Federal Water Pollution Control Act Amendments of 1972.

AE. ENO may transfer IP3 spent fuel to the IP2 spent fuel pit subject to the conditions listed in Appendix C. ENO is further authorized to transfer IP3 spent fuel into NRC approved storage casks for onsite storage by ENO and ENIP3.

3. This amended license is effective at 12:01 a.m., November 21, 2000, and shall expire at midnight December 12, 2015.

Original signed by

Robert W. Reid, Chief
Operating Reactors Branch #4
Division of Operating Reactors

~~Attachment: Changes to the Technical Specifications~~

Attachments:
Appendix A – Technical Specifications
Appendix B – Environmental Technical Specification Requirements
Appendix C – Inter-Unit Fuel Transfer Technical Specifications

Date of Issuance: March 8, 1978

ATTACHMENT 5 TO NL-10-093

Indian Point Unit 2
Appendix C to the Operating License
Inter-Unit Fuel Transfer Technical Specifications

Entergy Nuclear Operations, Inc.
Indian Point Unit 2
Docket No. 50-247

APPENDIX C

TO

FACILITY OPERATING LICENSE

FOR

ENTERGY NUCLEAR INDIAN POINT 2, LLC

AND ENTERGY NUCLEAR OPERATIONS, INC.

INDIAN POINT NUCLEAR GENERATING
UNIT NUMBER 2

INTER-UNIT FUEL TRANSFER TECHNICAL SPECIFICATIONS

PART I: SPENT FUEL TRANSFER CANISTER AND TRANSFER CASK SYSTEM

FACILITY LICENSE NO. DPR-26

DOCKET NUMBER 50-247

Amendment No.

SPENT FUEL SHIELDED TRANSFER CANISTER AND TRANSFER CASK SYSTEM

1.0 DESCRIPTION

The spent fuel transfer system consists of the following components: (1) a spent fuel shielded transfer canister (STC), which contains the fuel; (2) a transfer cask (HI-TRAC 100D) (hereafter referred to as HI-TRAC), which contains the STC during transfer operations; and (3) a bottom missile shield.

The STC and HI-TRAC are designed to transfer irradiated nuclear fuel assemblies from the Indian Point 3 (IP3) spent fuel pit to the Indian Point 2 (IP2) spent fuel pit. A fuel basket within the STC holds the fuel assemblies and provides criticality control. The shielded transfer canister provides the confinement boundary, water retention boundary, gamma radiation shielding, and heat rejection capability. The HI-TRAC provides a water retention boundary, protection of the STC, gamma and neutron radiation shielding, and heat rejection capability. The STC contains up to 12 fuel assemblies.

The STC is the confinement system for the fuel. It is a welded, multi-layer steel and lead cylinder with a welded base-plate and bolted lid. The inner shell of the canister forms an internal cylindrical cavity for housing the fuel basket. The outer surface of the canister inner shell is buttressed with lead and steel shells for radiation shielding. The minimum thickness of the steel, lead and steel shells relied upon for shielding starting with the innermost shell are ¾ inch steel, 2 ¾ inch lead and ⅜ inch steel, respectively. The canister closure incorporates two O-ring seals to ensure its confinement function. The confinement system consists of the canister inner shell, bottom plate, top flange, top lid, top lid O-ring seals, vent port seal and cover plate, and drain port seal and coverplate. The fuel basket, for the transfer of 12 Pressurized Water Reactor (PWR) fuel assemblies, is a fully welded, stainless steel, honeycomb structure with neutron absorber panels attached to the individual storage cell walls under stainless steel sheathing. The maximum gross weight of the fully loaded STC is 40 tons.

The HI-TRAC is a multi-layer steel and lead cylinder with a bolted bottom (or pool) and top lid. For the fuel transfer operation the HI-TRAC is fitted with a solid top lid, an STC centering assembly, and a bottom missile shield. The inner shell of the transfer cask forms an internal cylindrical cavity for housing the STC. The outer surface of the cask inner shell is buttressed with intermediate lead and steel shells for radiation shielding. The minimum thickness of the steel, lead and steel shells relied upon for shielding starting with the innermost shell are ¾ inch steel, 2 ⅞inch lead and 1 inch steel, respectively. An outside shell called the "water jacket" contains water for neutron shielding. The HI-TRAC bottom and top lids incorporates a gasket seal design to ensure its water confinement function. The water confinement system consists of the HI-TRAC inner shell, bottom lid, top lid, top lid seal, bottom lid seal, vent port seal, vent port cap and bottom drain plug.

The HI-TRAC provides a water retention boundary, protection of the STC, gamma and neutron radiation shielding, and heat rejection capability. The bottom missile shield is attached to the bottom of the HI-TRAC and provides tornado missile protection of the pool lid bolted joint. The HI-TRAC can withstand a tornado missile in other areas without the need for additional shielding. The STC centering assembly provides STC position control within the HI-TRAC and also acts as an internal impact limiter in the event of a non-mechanistic tipover accident.

2.0 CONDITIONS

2.1 OPERATING PROCEDURES

Written operating procedures shall be prepared for cask handling, loading, movement, surveillance, and maintenance. The written operating procedures shall be consistent with the technical basis described in Chapter 9 of the IP2 and IP3 UFSARs.

2.2 ACCEPTANCE TESTS AND MAINTENANCE PROGRAM

Written cask acceptance tests and maintenance program shall be prepared consistent with the technical basis described in Chapter 9 of the IP2 and IP3 UFSARs.

2.3 PRE-OPERATIONAL TESTING AND TRAINING EXERCISE

A dry run training exercise of the loading, closure, handling/transfer, and unloading, of the equipment shall be conducted prior to the first transfer. The training exercise shall not be conducted with irradiated fuel. The dry run may be performed in an alternate step sequence from the actual procedures, but all steps must be performed. The dry run shall include, but is not limited to the following:

a) Moving the STC into the IP3 spent fuel pool.
b) Preparation of the HI-TRAC for STC loading.
c) Selection and verification of specific fuel assemblies and non-fuel hardware to ensure type conformance.
d) Loading specific assemblies and placing assemblies into the STC (using a single dummy fuel assembly), including appropriate independent verification.
e) Remote installation of the STC lid and removal of the STC from the spent fuel pool.
f) Placement of the STC into the HI-TRAC with the STC centering assembly.
g) STC closure, establishment of STC water level with steam, verification of STC water level, STC leakage testing, and operational steps required prior to transfer, as applicable.
h) Establishment and verification of HI-TRAC water level.
i) Installation of the HI-TRAC top lid.
j) HI-TRAC closure, leakage testing, and operational steps required prior to transfer, as applicable.
k) Movement of the HI-TRAC with STC from the IP3 fuel handling building to the IP2 fuel handling building along the haul route with designated devices.
l) Moving the STC into the IP2 spent fuel pool.

APPENDIX C

TO

FACILITY OPERATING LICENSE

FOR

ENTERGY NUCLEAR INDIAN POINT 2, LLC

AND ENTERGY NUCLEAR OPERATIONS, INC.

INDIAN POINT NUCLEAR GENERATING
UNIT NUMBER 2

INTER-UNIT FUEL TRANSFER TECHNICAL SPECIFICATIONS

PART II: TECHNICAL SPECIFICATIONS

FACILITY LICENSE NO. DPR-26

DOCKET NUMBER 50-247

Amendment No.

TABLE OF CONTENTS

1.0 USE AND APPLICATION

1.1 Definitions

----------NOTE----------
The defined terms of this section appear in capitalized type and are applicable throughout these Technical Specifications and Bases.

Term	Definition
ACTIONS	ACTIONS shall be that part of a Specification that prescribes Required Actions to be taken under designated Conditions within specified Completion Times.
INTACT FUEL ASSEMBLIES	INTACT FUEL ASSEMBLIES are fuel assemblies without known or suspected cladding defects greater than pinhole leaks or hairline cracks, and which can be handled by normal means. Fuel assemblies without fuel rods in fuel rod locations shall not be classified as INTACT FUEL ASSEMBLIES unless dummy fuel rods are used to displace an amount of water greater than or equal to that displaced by the original fuel rod(s).
LOADING OPERATIONS	LOADING OPERATIONS include all licensed activities on an STC while it is being loaded with fuel assemblies and while the STC is being placed in the HI-TRAC. LOADING OPERATIONS begin when the first fuel assembly is placed in the STC and end when the HI-TRAC is suspended from or secured on the TRANSPORTER.
NON-FUEL HARDWARE (NFH)	NON-FUEL HARDWARE is defined as Burnable Poison Rod Assemblies (BPRAs), Thimble Plug Devices (TPDs), Wet Annular Burnable Absorbers (WABAs), Rod Cluster Control Assemblies (RCCAs), Neutron Source Assemblies (NSAs) and Hafnium Suppressors.
TRANSFER OPERATIONS	TRANSFER OPERATIONS include all licensed activities performed on a HI-TRAC loaded with one or more fuel assemblies when it is being moved after LOADING OPERATIONS or before UNLOADING OPERATIONS. TRANSFER OPERATIONS begin when the HI-TRAC is first suspended from or secured on the transporter and end when the TRANSPORTER is at its destination and the HI-TRAC is no longer secured on or suspended from the transporter.
TRANSPORTER	TRANSPORTER is the device or vehicle which moves the HI-TRAC. The TRANSPORTER can either support the HI-TRAC from underneath or the HI-TRAC can be suspended from it.

(continued)

1.1 Definitions (continued)

Term	Definition
UNLOADING OPERATIONS	UNLOADING OPERATIONS include all licensed activities on an STC or HI-TRAC while it is being unloaded of the contained fuel assemblies. UNLOADING OPERATIONS begin when the HI-TRAC is no longer suspended from or secured on the TRANSPORTER and end when the last fuel assembly is removed from the STC.
ZR	ZR means any zirconium-based fuel cladding authorized for use in a commercial nuclear power plant reactor.

1.0 USE AND APPLICATION

1.2 Logical Connectors

PURPOSE	The purpose of this section is to explain the meaning of logical connectors. Logical connectors are used in Technical Specifications (TS) to discriminate between, and yet connect, discrete Conditions, Required Actions, Completion Times, Surveillances, and Frequencies. The only logical connectors that appear in TS are AND and OR. The physical arrangement of these connectors constitutes logical conventions with specific meanings.
BACKGROUND	Several levels of logic may be used to state Required Actions. These levels are identified by the placement (or nesting) of the logical connectors and by the number assigned to each Required Action. The first level of logic is identified by the first digit of the number assigned to a Required Action and the placement of the logical connector in the first level of nesting (i.e., left justified with the number of the Required Action). The successive levels of logic are identified by additional digits of the Required Action number and by successive indentions of the logical connectors. When logical connectors are used to state a Condition, Completion Time, Surveillance, or Frequency, only the first level of logic is used, and the logical connector is left justified with the statement of the Condition, Completion Time, Surveillance, or Frequency.

(continued)

1.2 Logical Connectors (continued)

EXAMPLES

The following examples illustrate the use of logical connectors.

EXAMPLE 1.2-1

ACTIONS

CONDITION	REQUIRED ACTION	COMPLETION TIME
A. LCO not met.	A.1 VERIFY . . . AND A.2 Restore . . .	

In this example the logical connector AND is used to indicate that when in Condition A, both Required Actions A.1 and A.2 must be completed.

(continued)

1.2 Logical Connectors (continued)

EXAMPLES (continued)

EXAMPLE 1.2-2

ACTIONS

CONDITION	REQUIRED ACTION		COMPLETION TIME
A. LCO not met.	A.1	Stop . . .	
	OR		
	A.2.1	Verify . . .	
	AND		
	A.2.2.1	Reduce . . .	
		OR	
	A.2.2.2	Perform . . .	
	OR		
	A.3	Remove . . .	

This example represents a more complicated use of logical connectors. Required Actions A.1, A.2, and A.3 are alternative choices, only one of which must be performed as indicated by the use of the logical connector OR and the left justified placement. Any one of these three ACTIONS may be chosen. If A.2 is chosen, then both A.2.1 and A.2.2 must be performed as indicated by the logical connector AND. Required Action A.2.2 is met by performing A.2.2.1 or A.2.2.2. The indented position of the logical connector OR indicates that A.2.2.1 and A.2.2.2 are alternative choices, only one of which must be performed.

1.0 USE AND APPLICATION

1.3 Completion Times

PURPOSE	The purpose of this section is to establish the Completion Time convention and to provide guidance for its use.
BACKGROUND	Limiting Conditions for Operation (LCOs) specify the lowest functional capability or performance levels of equipment required for safe operation of the facility. The ACTIONS associated with an LCO state Conditions that typically describe the ways in which the requirements of the LCO can fail to be met. Specified with each stated Condition are Required Action(s) and Completion Times(s).
DESCRIPTION	The Completion Time is the amount of time allowed for completing a Required Action. It is referenced to the time of discovery of a situation (e.g., equipment or variable not within limits) that requires entering an ACTIONS Condition unless otherwise specified, providing the Spent Fuel Shielded Transfer Canister and Transfer Cask System is in a specified condition stated in the Applicability of the LCO. Required Actions must be completed prior to the expiration of the specified Completion Time. An ACTIONS Condition remains in effect and the Required Actions apply until the Condition no longer exists or the Spent Fuel Shielded Transfer Canister and Transfer Cask System is not within the LCO Applicability. Once a Condition has been entered, subsequent subsystems, components, or variables expressed in the Condition, discovered to be not within limits, will <u>not</u> result in separate entry into the Condition unless specifically stated. The Required Actions of the Condition continue to apply to each additional failure, with Completion Times based on initial entry into the Condition.

(continued)

1.3 Completion Times (continued)

EXAMPLES

The following examples illustrate the use of Completion Times with different types of Conditions and changing Conditions.

EXAMPLE 1.3-1

ACTIONS

CONDITION	REQUIRED ACTION	COMPLETION TIME
B. Required Action and associated Completion Time not met.	B.1 Perform Action B.1	12 hours
	AND	
	B.2 Perform Action B.2	36 hours

Condition B has two Required Actions. Each Required Action has its own separate Completion Time. Each Completion Time is referenced to the time that Condition B is entered.

The Required Actions of Condition B are to complete action B.1 within 12 hours AND complete action B.2 within 36 hours. A total of 12 hours is allowed for completing action B.1 and a total of 36 hours (not 48 hours) is allowed for completing action B.2 from the time that Condition B was entered. If action B.1 is completed within 6 hours, the time allowed for completing action B.2 is the next 30 hours because the total time allowed for completing action B.2 is 36 hours.

(continued)

1.3 Completion Times (continued)

EXAMPLES (continued)

EXAMPLE 1.3-2

ACTIONS

CONDITION	REQUIRED ACTION	COMPLETION TIME
A. One system not within limit.	A.1 Restore system to within limit.	7 days
B. Required Action and associated Completion Time not met.	B.1 Complete action B.1. AND B.2 Complete action B.2.	12 hours 36 hours

When a system is determined not to meet the LCO, Condition A is entered. If the system is not restored within 7 days, Condition B is also entered and the Completion Time clocks for Required Actions B.1 and B.2 start. If the system is restored after Condition B is entered, Conditions A and B are exited, and therefore, the Required Actions of Condition B may be terminated.

(continued)

1.3 Completion Times (continued)

EXAMPLES (continued)

EXAMPLE 1.3-3

ACTIONS

----------NOTE----------
Separate Condition entry is allowed for each component.

CONDITION	REQUIRED ACTION	COMPLETION TIME
A. LCO not met.	A.1 Restore compliance with LCO.	4 hours
B. Required Action and associated Completion Time not met.	B.1 Complete action B.1. AND B.2 Complete action B.2.	6 hours 12 hours

The Note above the ACTIONS table is a method of modifying how the Completion Time is tracked. If this method of modifying how the Completion Time is tracked was applicable only to a specific Condition, the Note would appear in that Condition rather than at the top of the ACTIONS Table.

The Note allows Condition A to be entered separately for each component, and Completion Times tracked on a per component basis. When a component is determined to not meet the LCO, Condition A is entered and its Completion Time starts. If subsequent components are determined to not meet the LCO, Condition A is entered for each component and separate Completion Times start and are tracked for each component.

(continued)

1.3 Completion Times (continued)

IMMEDIATE COMPLETION TIME	When "Immediately" is used as a Completion Time, the Required Action should be pursued without delay and in a controlled manner.

1.0 USE AND APPLICATION

1.4 Frequency

PURPOSE	The purpose of this section is to define the proper use and application of Frequency requirements.
DESCRIPTION	Each Surveillance Requirement (SR) has a specified Frequency in which the Surveillance must be met in order to meet the associated Limiting Condition for Operation (LCO). An understanding of the correct application of the specified Frequency is necessary for compliance with the SR. The "specified Frequency" is referred to throughout this section and each of the Specifications of Section 3.0, Surveillance Requirement (SR) Applicability. The "specified Frequency" consists of the requirements of the Frequency column of each SR. Situations where a Surveillance could be required (i.e., its Frequency could expire), but where it is not possible or not desired that it be performed until sometime after the associated LCO is within its Applicability, represent potential SR 3.0.4 conflicts. To avoid these conflicts, the SR (i.e., the Surveillance or the Frequency) is stated such that it is only "required" when it can be and should be performed. With an SR satisfied, SR 3.0.4 imposes no restriction.

(continued)

1.4 Frequency (continued)

EXAMPLES

The following examples illustrate the various ways that Frequencies are specified.

EXAMPLE 1.4-1

SURVEILLANCE REQUIREMENTS

SURVEILLANCE	FREQUENCY
Verify pressure within limit	12 hours

Example 1.4-1 contains the type of SR most often encountered in the Technical Specifications (TS). The Frequency specifies an interval (12 hours) during which the associated Surveillance must be performed at least one time. Performance of the Surveillance initiates the subsequent interval. Although the Frequency is stated as 12 hours, an extension of the time interval to 1.25 times the interval specified in the Frequency is allowed by SR 3.0.2 for operational flexibility. The measurement of this interval continues at all times, even when the SR is not required to be met per SR 3.0.1 (such as when the equipment or variables are outside specified limits, or the facility is outside the Applicability of the LCO). If the interval specified by SR 3.0.2 is exceeded while the facility is in a condition specified in the Applicability of the LCO, the LCO is not met in accordance with SR 3.0.1.

If the interval as specified by SR 3.0.2 is exceeded while the facility is not in a condition specified in the Applicability of the LCO for which performance of the SR is required, the Surveillance must be performed within the Frequency requirements of SR 3.0.2 prior to entry into the specified condition. Failure to do so would result in a violation of SR 3.0.4

(continued)

1.4 Frequency (continued)

EXAMPLES
(continued)

EXAMPLE 1.4-2

SURVEILLANCE REQUIREMENTS

SURVEILLANCE	FREQUENCY
Verify flow is within limits.	Once within 12 hours prior to starting activity AND 24 hours thereafter

Example 1.4-2 has two Frequencies. The first is a one time performance Frequency, and the second is of the type shown in Example 1.4-1. The logical connector "AND" indicates that both Frequency requirements must be met. Each time the example activity is to be performed, the Surveillance must be performed within 12 hours prior to starting the activity.

The use of "once" indicates a single performance will satisfy the specified Frequency (assuming no other Frequencies are connected by "AND"). This type of Frequency does not qualify for the 25% extension allowed by SR 3.0.2.

"Thereafter" indicates future performances must be established per SR 3.0.2, but only after a specified condition is first met (i.e., the "once" performance in this example). If the specified activity is canceled or not performed, the measurement of both intervals stops. New intervals start upon preparing to restart the specified activity.

2.0 NOT USED

This section is intentionally left blank

3.0 LIMITING CONDITIONS FOR OPERATION (LCO) APPLICABILITY

LCO 3.0.1	LCOs shall be met during specified conditions in the Applicability, except as provided in LCO 3.0.2.
LCO 3.0.2	Upon discovery of a failure to meet an LCO, the Required Actions of the associated Conditions shall be met, except as provided in LCO 3.0.5. If the LCO is met or is no longer applicable prior to expiration of the specified Completion Time(s), completion of the Required Action(s) is not required, unless otherwise stated.
LCO 3.0.3	Not applicable.
LCO 3.0.4	When an LCO is not met, entry into a specified condition in the Applicability shall not be made except when the associated ACTIONS to be entered permit continued operation in the specified condition in the Applicability for an unlimited period of time. This Specification shall not prevent changes in specified conditions in the Applicability that are required to comply with ACTIONS or that are related to the unloading of an STC.
LCO 3.0.5	Equipment removed from service or not in service in compliance with ACTIONS may be returned to service under administrative control solely to perform testing required to demonstrate it meets the LCO or that other equipment meets the LCO. This is an exception to LCO 3.0.2 for the system returned to service under administrative control to perform the testing.

3.0 SURVEILLANCE REQUIREMENT (SR) APPLICABILITY

SR 3.0.1	SRs shall be met during the specified conditions in the Applicability for individual LCOs, unless otherwise stated in the SR. Failure to meet a Surveillance, whether such failure is experienced during the performance of the Surveillance or between performances of the Surveillance, shall be failure to meet the LCO. Failure to perform a Surveillance within the specified Frequency shall be failure to meet the LCO except as provided in SR 3.0.3. Surveillances do not have to be performed on equipment or variables outside specified limits.
SR 3.0.2	The specified Frequency for each SR is met if the Surveillance is performed within 1.25 times the interval specified in the Frequency, as measured from the previous performance or as measured from the time a specified condition of the Frequency is met. For Frequencies specified as "once," the above interval extension does not apply. If a Completion Time requires periodic performance on a "once per..." basis, the above Frequency extension applies to each performance after the initial performance. Exceptions to this Specification are stated in the individual Specifications.
SR 3.0.3	If it is discovered that a Surveillance was not performed within its specified Frequency, then compliance with the requirement to declare the LCO not met may be delayed, from the time of discovery, up to 24 hours or up to the limit of the specified Frequency, whichever is less. This delay period is permitted to allow performance of the Surveillance. If the Surveillance is not performed within the delay period, the LCO must immediately be declared not met, and the applicable Condition(s) must be entered. When the Surveillance is performed within the delay period and the Surveillance is not met, the LCO must immediately be declared not met, and the applicable Condition(s) must be entered.
SR 3.0.4	Entry into a specified condition in the Applicability of an LCO shall not be made unless the LCO's Surveillances have been met within their specified Frequency. This provision shall not prevent entry into specified conditions in the Applicability that are required to comply with Actions or that are related to the unloading of an STC.

3.1 INTER-UNIT FUEL TRANSFER

3.1.1 Shielded Transfer Canister (STC) Boron Concentration

LCO 3.1.1 The boron concentration of the water in the STC shall be ≥ 2000 ppm.

APPLICABILITY: Whenever one or more fuel assemblies are in the STC.

ACTIONS

CONDITION	REQUIRED ACTION	COMPLETION TIME
A. STC boron concentration not within limit.	A.1 Suspend LOADING OPERATIONS or UNLOADING OPERATIONS.	Immediately
	AND	
	A.2 Suspend positive reactivity additions.	Immediately
	AND	
	A.3 Initiate action to restore boron concentration to within limit.	Immediately

SURVEILLANCE REQUIREMENTS

SURVEILLANCE	FREQUENCY
----------NOTE---------- This surveillance is only required to be performed if the STC is submerged in water or if water is to be added to, or recirculated through, the STC. Water added to, or recirculated through, the STC must meet the boron concentration requirement of LCO 3.1.1. ----------	
SR 3.1.1.1 Verify the STC boron concentration is within limit using two independent measurements.	Once, within 4 hours prior to entering the Applicability of this LCO. AND Once per 48 hours thereafter.

3.1 INTER-UNIT FUEL TRANSFER

3.1.2 Shielded Transfer Canister (STC) Loading

LCO 3.1.2 INTACT FUEL ASSEMBLIES placed into the Shielded Transfer Canister (STC) shall be classified in accordance with Table 3.1.2-1 based on initial enrichment and burnup and shall be restricted based on the following:

a. INTACT FUEL ASSEMBLIES classified as Type 2 may be placed in any location of the STC basket (see Figure 3.1.2-1) with the following restrictions:

1. Post-irradiation cooling time ≥ 5 years;
2. Fuel assembly average burnup ≤ 55,000 MWD/MTU;
3. Decay heat including non fuel hardware ≤ 650 Watts (any cell);
4. Decay heat including non fuel hardware ≤ 1105 Watts (cell 1, 2, 3 or 4).
5. Post-irradiation cooling time and the maximum average burnup of non fuel hardware shall be within the cell locations and limits specified in Table 3.1.2-2.

b. INTACT FUEL ASSEMBLIES classified as Type 1 or Type 2 may be placed in locations 5, 6, 7, 8, 9, 10, 11, 12 of the STC basket (see Figure 3.1.2-1) with the following restrictions:

1. Post-irradiation cooling time ≥ 5 years;
2. Fuel assembly average burnup ≤ 55,000 MWD/MTU;
3. Decay heat including non fuel hardware ≤ 650 Watts.

- NOTE -

If one or more Type 1 fuel assemblies are in the STC, cells 1, 2, 3, AND 4 must be empty.

APPLICABILITY: Whenever one or more fuel assemblies are in the STC.

ACTIONS

CONDITION	REQUIRED ACTION	COMPLETION TIME
A. One or more fuel assemblies in the STC do not meet the LCO limits.	A.1.1 Initiate action to restore compliance with LCO 3.1.2. OR A.1.2 Initiate action to move fuel to the IP3 spent fuel pit in accordance with IP3 Appendix A Technical Specification LCO 3.7.16.	Immediately

SURVEILLANCE REQUIREMENTS

SURVEILLANCE	FREQUENCY
SR 3.1.2.1 Verify by administrative means that the fuel assembly meets the requirements specified in the LCO for placement in the STC.	Prior to placing the fuel assembly in the STC.

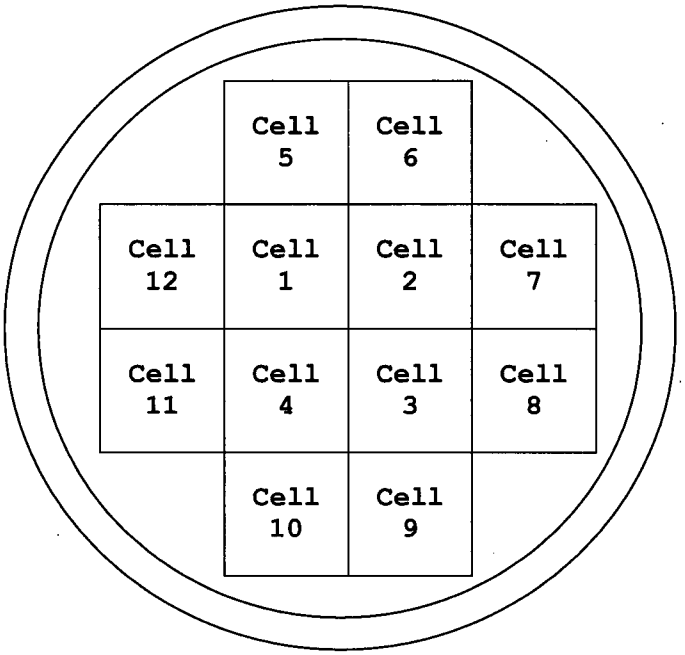

Figure 3.1.2-1
Shielded Transfer Canister Layout
(Top View)

Table 3.1.2-1
Minimum Burnup Requirements at Varying Initial Enrichments[a]

Maximum Assembly Initial Enrichment (wt% U235)	Configuration A[c] Minimum Assembly Average Burnup (MWD/MTU)[b]	Configuration B[d] Minimum Assembly Average Burnup (MWD/MTU)[b]
2.0	3,200	3,900
2.5	11,600	16,700
3.0	20,000	26,400
3.5	27,900	35,100
4.0	34,700	42,500
4.5	40,600	50,200
5.0	46,600	58,200

(a) Fuel that does not meet the minimum assembly average burnup at a given initial enrichment is classified as Type 1 fuel. Fuel that meets the minimum assembly average burnup at a given initial enrichment is classified as Type 2 fuel.

(b) Linear interpolation between enrichment levels to determine minimum burnup requirements is permitted. The maximum fuel assembly average burnup is limited to 55,000 MWD/MTU and the maximum value of 58,200 MWD/MTU provided in this Table is for linear interpolation purposes only.

(c) Assemblies that have not been located in any cycle under a control rod bank that was permitted to be inserted during full power operation or where it can be shown that the insertion did not exceed 8 inches below the top of the active fuel.

(d) Assemblies that have been located under a control rod bank that was permitted to be inserted during full power operation and where the insertion was more than 8 inches below the top of the active fuel.

Table 3.1.2-2

Non Fuel Hardware Post Irradiation Cooling Times and Allowable Average Burnup

NFH Type	Cooling Time (years)	Burnup (MWD/MTU)	Allowed Quantity and Location
BPRA[a]	≥ 15	≤ 30,000	Up to twelve (12) per transfer in any location
TPD	≥ 16	≤ 30,000	Up to twelve (12) per transfer in any location
RCCA	≥ 5	≤ 630,000	Up to four (4) per transfer in Cells 1, 2, 3, and/or 4
NSA	≥ 14	≤ 630,000	One per transfer in Cell 1, 2, 3, or 4

(a) Includes BPRAs, WABAs, and Hafnium suppressors

3.1 INTER-UNIT FUEL TRANSFER

3.1.3 Shielded Transfer Canister (STC) Pressure Rise

LCO 3.1.3 The pressure rise in the STC cavity shall be ≤ 4.2 psi over a 24 hour period.

APPLICABILITY: Prior to TRANSFER OPERATIONS when the STC is in the HI-TRAC and the STC lid has been installed and the STC water level established.

ACTIONS

CONDITION	REQUIRED ACTION	COMPLETION TIME
A. STC cavity pressure rise not within limit.	A.1 Establish a vent path on the STC.	Immediately
	AND	
	A.2.1 Return the STC to the spent fuel pool. OR ----------NOTE---------- Water used for recirculation must meet the boron concentration requirement of LCO 3.1.1. ----------	12 hours
	A.2.2 Begin circulation of borated water in the STC until the STC water exit temperature is < 180°F and then return the STC to the spent fuel pool.	Immediately

SURVEILLANCE REQUIREMENTS

SURVEILLANCE		FREQUENCY
SR 3.1.3.1	Verify by direct measurement that STC cavity pressure rise is within limit.	Once prior to TRANSFER OPERATIONS.

3.1 INTER-UNIT FUEL TRANSFER

3.1.4 Shielded Transfer Canister (STC) Unloading

----------NOTE----------

1. Only IP3 spent fuel assemblies are permitted to be in the STC.
2. Once each IP3 spent fuel assembly removed from the STC has been placed in an IP2 spent fuel rack location and disconnected from the spent fuel pit bridge crane, it may not be returned to the STC.
3. For fuel assemblies exposed to Hafnium inserts during irradiation the burnup of the assembly shall be the burnup prior to the exposure to the Hafnium insert.

LCO 3.1.4 IP3 spent fuel assemblies transferred to IP2 via the STC must be either in an approved IP2 spent fuel pit storage rack location per IP2 Appendix A Technical Specification LCO 3.7.13, in their authorized STC fuel basket cell, or be in transit between these two locations.

APPLICABILITY: Whenever the STC is in the Unit 2 spent fuel pit.

ACTIONS

CONDITION	REQUIRED ACTION	COMPLETION TIME
A. One or more fuel assemblies not in the required location.	A.1.1 Initiate action to restore compliance with LCO 3.1.4.	Immediately

SURVEILLANCE REQUIREMENTS

SURVEILLANCE		FREQUENCY
SR 3.1.4.1	Verify by administrative means that a fuel assembly returned to the STC has been re-loaded into the same STC cell from which it was removed.	Once, after each re-loaded fuel assembly is returned to the STC.

4.0 DESIGN FEATURES

4.1 Inter-Unit Fuel Transfer

4.1.1 Fuel Assemblies

Fuel assemblies selected for inter-unit transfer of fuel shall meet the fuel characteristics specified in Table 4.1.1-1.

4.1.2 Criticality

4.1.2.1 The Shielded Transfer Canister (STC) is designed and shall be maintained with:

a. Fuel assemblies having a maximum U-235 enrichment of 5.0 weight percent;

b. $k_{eff} \leq 0.95$ if fully flooded with unborated water;

c. A nominal 9.218 inch center-to-center distance between fuel assemblies placed in the STC basket;

d. Basket cell ID: 8.79 in. (nominal)

e. Basket cell wall thickness: 0.28 in. (nominal)

f. B_4C in the Metamic neutron absorber: ≤ 33.0 wt.% and ≥ 31.5 wt.%

g. ^{10}B loading in B_4C in the Metamic neutron absorber : ≥ 18.4%

h. Metamic panel thickness: ≥ 0.102 in.

4.1.2.2 Drainage

The STC is designed and shall be maintained to prevent inadvertent draining.

4.1.2.3 Capacity

The STC is designed and shall be maintained with a capacity of no more that 12 fuel assemblies.

4.1.3 Codes and Standards

The American Society of Mechanical Engineers Boiler and Pressure Vessel Code (ASME Code), 2004 Edition, is the governing Code for the STC, as clarified below, except for Code Sections V and IX. The latest effective editions of ASME Code Sections V and IX, including addenda, may be used for activities governed by those sections, provided a written reconciliation of the later edition against the 2004 Edition, is performed. Table 4.1.3-1 lists approved alternatives to the ASME Code for the design of the STC.

(continued)

4.0 DESIGN FEATURES (continued)

4.1.4 Geometric Arrangements and Process Variables

The following are geometric arrangements and process variables that require a one time verification as part of the inter-unit fuel transfer operation:

1. LOADING OPERATIONS, TRANSFER OPERATIONS, and UNLOADING OPERATIONS shall only be conducted with working area ambient temperatures ≥ 0°F.

2. LOADING OPERATIONS shall only be conducted when the spent fuel pit water temperature and the fuel handling building ambient temperatures are both ≤ 100°F.

3. LOADING OPERATIONS shall only be conducted when the IP3 spent fuel pit contains irradiated fuel only.

4. TRANSFER OPERATIONS shall only be conducted when the outside air temperature is ≤ 100°F.

5. TRANSFER OPERATIONS shall only be conducted when the STC trunnions are offset from the HI-TRAC trunnions in the azimuthal direction by at least 30 degrees.

6. TRANSFER OPERATIONS shall only be conducted when the STC water level is 9.5 +/- 0.5 inches below the bottom of the STC lid and the water level has been independently verified. STC water level is determined from a measurement of the volume of water expelled from the STC as the water level is established.

7. TRANSFER OPERATIONS shall only be conducted when the combined leak rate through the STC lid, vent port, and drain port confinement seals does not exceed 2.6×10^{-4} std-cm^3/s.

8. TRANSFER OPERATIONS shall only be conducted when the HI-TRAC water level is within +0/-1 inch of the top of the STC lid and the water level has been independently verified.

9. TRANSFER OPERATIONS shall only be conducted when the combined leak rate through the HI-TRAC top lid and vent port cover confinement seals does not exceed 1×10^{-3} std-cm^3/s.

10. TRANSFER OPERATIONS shall not occur with a TRANSPORTER that contains > 50 gallons of diesel fuel.

(continued)

4.0 DESIGN FEATURES (continued)

Table 4.1.1-1

Fuel Assembly Characteristics

Fuel Assembly Class	15x15[a]
No. of Fuel Rod Locations	204
Fuel Rod Clad O.D. (in)	≥ 0.420
Fuel Rod Clad I.D. (in)	≥ 0.3736
Fuel Pellet Diameter (in)	≤ 0.3671
Fuel Rod Pitch (in)	≤ 0.563
Active Fuel Length (in)	≤ 150
Fuel Assembly Length (in)	≤ 176.8
Fuel Assembly Width (in)	≤ 8.54
No. of Guide and/or Instrument Tubes	21
Guide/Instrument Tube Thickness (mm)	≥ 0.015

(a) All dimensions are design nominal values. Maximum and minimum dimensions are specified to bound variations in design nominal values among fuel assemblies within the 15x15 class.

4.0 DESIGN FEATURES (continued)

Table 4.1.3-1 (page 1 of 2)

List of ASME Code Alternatives for the STC

Component	Reference ASME Code Section/Article	Code Requirement	Alternative, Justification & Compensatory Measures
STC Confinement Boundary	ND-1000	Statement of requirements for Code stamping of components.	Cask confinement boundary is designed, and will be fabricated in accordance with ASME Code, Section III, Subsection ND to the maximum practical extent, but Code stamping is not required.
STC Confinement Boundary	ND-2000	Requires materials to be supplied by ASME-approved material supplier.	Holtec approved suppliers will supply materials with CMTRs per ND-2000.
STC and STC basket assembly	ND-3100 NG-3100	Provides requirements for determining design loading conditions, such as pressure, temperature, and mechanical loads.	These requirements are not applicable. The Licensing Report, serving as the Design Specification, establishes the service conditions and load combinations for fuel transfer.
STC Confinement Boundary	ND-7000	Vessels are required to have overpressure protection.	No overpressure protection is provided. Function of cask vessel is as a radionuclide confinement boundary under normal and hypothetical accident conditions. Cask is designed to withstand maximum internal pressure and maximum accident temperatures.
STC Confinement Boundary	ND-8000	States requirement for name, stamping and reports per NCA-8000	STC to be marked and identified in accordance with the drawing. Code stamping is not required. QA data package prepared in accordance with Holtec's approved QA program.

4.0 DESIGN FEATURES (continued)

Table 4.1.3-1 (page 2 of 2)

List of ASME Code Alternatives for the STC

Component	Reference ASME Code Section/Article	Code Requirement	Alternative, Justification & Compensatory Measures
STC Basket Assembly	NG-4420	NG-4427(a) requires a fillet weld in any single continuous weld may be less that the specified fillet weld dimension by not more than 1/16 inch, provided that the total undersize portion of the weld does not exceed 10 percent of the length of the weld. Individual undersize weld portions shall not exceed 2 inches in length.	Modify the Code requirement (intended for core support structures) with the following text prepared to accord with the geometry and stress analysis imperatives for the fuel basket: For the longitudinal STC basket fillet welds, the following criteria apply: 1) The specified fillet weld throat dimension must be maintained over at least 92 percent of the total weld length. All regions of undersized weld must be less than 3 inches long and separated from each other by at least 9 inches. 2) Areas of undercuts and porosity beyond that allowed by the applicable ASME Code shall not exceed 1/2 inch in weld length. The total length of undercut and porosity over any 1-foot length shall not exceed 2 inches. 3) The total weld length in which items (1) and (2) apply shall not exceed a total of 10 percent of the overall weld length. The limited access of the STC basket panel longitudinal fillet welds makes it difficult to perform effective repairs of these welds and creates the potential for causing additional damage to the basket assembly (e.g., to the neutron absorber and its sheathing) if repairs are attempted. The acceptance criteria provided in the foregoing have been established to comport with the objectives of the basket design and preserve the margins demonstrated in the supporting stress analysis. From the structural standpoint, the weld acceptance criteria are established to ensure that any departure from the ideal, continuous fillet weld seam would not alter the primary bending stresses on which the design of the fuel baskets is predicated. Stated differently, the permitted weld discontinuities are limited in size to ensure that they remain classifiable as local stress elevators ("peak stress", F, in the ASME Code for which specific stress intensity limits do not apply).
STC Basket Assembly	NG-8000	States requirements for nameplates, stamping and reports per NCA-8000.	STC basket to be marked and identified in accordance with the drawing. No Code stamping is required. The STC basket data package is to be in conformance with Holtec's QA program.

5.0 PROGRAMS

The following programs shall be established, implemented and maintained.

5.1 Transport Evaluation Program

a. For lifting of the loaded STC or loaded HI-TRAC using equipment which is integral to a structure governed by 10 CFR Part 50 regulations, 10 CFR 50 requirements apply.

b. This program is not applicable when the loaded HI-TRAC is in the fuel building or is being handled by equipment providing support from underneath (e.g., on air pads).

c. The loaded HI-TRAC may be lifted to any height necessary during TRANSFER OPERATIONS provided the lifting equipment is designed in accordance with items 1, 2, and 3 below.

   1. The metal body and any vertical columns of the lifting equipment shall be designed to comply with stress limits of ASME Section III, Subsection NF, Class 3 for linear structures. All vertical compression loaded primary members shall satisfy the buckling criteria of ASME Section III, Subsection NF.

   2. The horizontal cross beam and any lifting attachments used to connect the load to the lifting equipment shall be designed, fabricated, operated, tested, inspected, and maintained in accordance with applicable sections and guidance of NUREG-0612, Section 5.1. This includes applicable stress limits from ANSI N14.6.

   3. The lifting equipment shall have redundant drop protection features which prevent uncontrolled lowering of the load.

d. The lift height of the loaded HI-TRAC above the transport route surface or other supporting surface shall be limited to 6 inches, except as provided in Specification 5.1.c.3.

5.2 Metamic Coupon Sampling Program

A coupon surveillance program shall be implemented to maintain surveillance of the Metamic neutron absorber material under the radiation, chemical, and thermal environment of the STC.

The surveillance program will be implemented to monitor the performance of Metamic by installing eight bare coupons near the maximum gamma flux elevation (mid height) at four circumferential downcomer areas around the STC fuel basket. At any time during its use the STC must have four of the eight coupons installed.

The following specifications apply:

(i) Coupon size will be nominally 4" x 6". Each coupon will be marked with a unique identification number.

(continued)

5.0 PROGRAMS (continued)

(ii) Pre-characterization testing: Before installation, each coupon will be measured and weighed. The measurements shall be taken at locations pre-specified in the test program. Each coupon shall be tested by neutron attenuation before installation in the STC. The weight, length, width, thickness, and results of the neutron attenuation testing shall be documented and retained.

(iii) Four coupons will be tested at the end of each inter-unit fuel transfer campaign. The coupons shall be measured and weighed and the results compared with the pre-characterization testing data. The results shall be documented and retained.

(iv) The coupons shall be examined for any indication of swelling, delamination, edge degradation, or general corrosion. The results of the examination shall be documented and retained.

(v) The coupons shall be tested by neutron attenuation and the results compared with the pre-characterization testing data. The results of the testing shall be documented and retained. Results are acceptable if the measured value is within +/-2.5% of the value measured for the same coupon at manufacturing.

(vi) The coupons shall be returned to their locations in the STC unless anomalous material behavior is found.

5.3 Technical Specifications (TS) Bases Control Program

This program provides a means for processing changes to the Bases of these Technical Specifications.

a. Changes to the Bases of the TS shall be made under appropriate administrative controls and reviews.

b. Licensees may make changes to Bases without prior NRC approval provided the changes do not involve either of the following:

1. a change in the TS incorporated in the license; or
2. a change to the updated FSAR or Bases that requires NRC approval pursuant to 10 CFR 50.59.

c. The Bases Control Program shall contain provisions to ensure that the Bases are maintained consistent with the FSAR.

d. Proposed changes that do not meet the criteria of Specification 5.5.b above shall be reviewed and approved by the NRC prior to implementation. Changes to the Bases implemented without prior NRC approval shall be provided to the NRC on a frequency consistent with 10 CFR 50.71(e).

ATTACHMENT 6 TO NL-10-093

Indian Point Unit 2
Appendix C to the Operating License
Inter-Unit Fuel Transfer Technical Specifications Bases

Entergy Nuclear Operations, Inc.
Indian Point Unit 2
Docket No. 50-247

B 3.1 INTER-UNIT FUEL TRANSFER

B 3.1.1 Shielded Transfer Canister (STC) Boron Concentration

BASES

BACKGROUND

In the Shielded Transfer Canister (STC) design, the fuel basket is divided rectilinearly into twelve cells as shown in Figure 3.1.2-1, "Shielded Transfer Canister Layout (Top View)". All cells are sized to contain IP3 spent fuel assemblies. All cells are designed and analyzed for fuel of a certain enrichment, burnup, cooling time, and decay heat. The inner cells are designed and analyzed to contain fuel with slightly higher burnup and shorter cooling time. The fuel in the outer cells provides shielding for the fuel in the inner cells.

Prior to placing the fuel in the STC, the fuel assemblies are classified as to the level of reactivity based on the initial enrichment and burnup. This classification is made using Table 3.1.2-1, "Minimum Burnup Requirements at Varying Initial Enrichments". This classification is used to determine if the fuel assembly may be placed in the STC and where it can be placed.

Each configuration is analyzed to demonstrate that k_{eff} is less than or equal to 0.95 with the fuel storage basket loaded with fuel of the highest anticipated reactivity and the STC flooded with water. Under normal conditions, the water in the STC is assumed to be unborated water, while under accident conditions, the soluble boron in the water is credited (Reference 1).

(continued)

BASES

APPLICABLE SAFETY ANALYSES

The water in the STC will contain soluble boron at the same levels of the spent fuel pit, which results in large subcriticality margins under actual operating conditions. The effective neutron multiplication factor (keff) shall be less than 0.95 with the STC fully loaded with fuel of the highest anticipated reactivity and the STC cavity flooded with unborated water at a temperature corresponding to the highest reactivity. Hence, the design of the STC is based on the use of unborated water, which maintains the STC in a subcritical condition during normal operation with the STC fully loaded and in conformance with the fuel storage locations, enrichment and burnup assumed in the analysis and as specified by LCO 3.1.2.

The double contingency principle discussed in ANSI N-16.1-1975 and the April 1978 NRC letter (Reference 2) allows credit for soluble boron under other abnormal or accident conditions because only a single accident need be considered at one time. For example, the accident scenarios include dropping a fuel assembly on top of the STC basket, or accidental misloading of a fuel assembly in the STC basket. These events could increase the potential for criticality in the STC. The criticality accidents can only take place during or as a result of the movement of an assembly. For these accident occurrences, the presence of soluble boron in the spent fuel storage pit prevents criticality in the STC. Reference 1 describes multiple fuel assembly misloads and determined that in the limiting configuration a boron concentration of 998 ppm was required to maintain k_{eff} less than or equal to 0.95.

The applicable safety analysis for boron concentration in the IP2 spent fuel pool is described in Appendix A TS B 3.7.12 "Spent Fuel Pit Boron Concentration". The associated Appendix A TS LCO 3.7.12 requires that the spent fuel pit boron concentration be greater than or equal to 2000 ppm. Similarly, the boron concentration in the IP3 spent fuel pool is described in Appendix A TS B 3.7.15 "Spent Fuel Pit Boron Concentration". The associated Appendix A TS LCO 3.7.15 requires that the spent fuel pit boron concentration be greater than or equal to 1000 ppm. Therefore, in order to preserve the assumptions of the criticality analyses when fuel is in the STC LCO 3.1.1 specifies a minimum boron concentration of 2000 ppm.

The concentration of dissolved boron in the STC satisfies Criterion 2 of 10 CFR 50.36.

(continued)

BASES

LCO

The STC boron concentration is required to be ≥ 2000 ppm. The specified concentration of dissolved boron in the STC preserves the assumptions used in the potential criticality accident scenarios as described in Reference 1. This concentration also preserves the assumptions of the IP2 and IP3 spent fuel pools.

APPLICABILITY

This LCO applies whenever one or more fuel assemblies are in the STC.

ACTIONS

A.1, A.2 and A.3

When the concentration of boron in the STC is less than required, immediate action must be taken to preclude the occurrence of an accident or to mitigate the consequences of an accident in progress. This is most efficiently achieved by immediately suspending the movement of fuel assemblies. The suspension of positive reactivity additions and restoration of boron concentration is performed simultaneously with suspending movement of fuel assemblies. Prior to resuming movement of fuel assemblies, the concentration of boron must be restored. This does not preclude movement of a fuel assembly to a safe position.

SURVEILLANCE REQUIREMENTS

SR 3.1.1.1

This SR is modified by a Note indicating that the surveillance is only required to be performed if the STC is submerged in water or if water is to be added to, or recirculated through, the STC. These are the only times when a change in STC boron concentration could potentially occur. In order to preserve the assumptions of the criticality analysis, the Note further requires that water added to, or recirculated through, the STC must meet the boron concentration requirements of LCO 3.1.1. This Note does not apply to the addition of steam to the STC (Reference 1)

This SR verifies that the concentration of boron in the STC is within the required limit. As long as this SR is met, the analyzed accidents are fully addressed. The initial surveillance within 4 hours prior to loading fuel into the STC and the 48 hour Frequency thereafter are appropriate because no major replenishment of spent fuel pit water is expected to take place over such a short period of time and any recirculation of water or water added to the STC will be accomplished using borated water at or above the required limit.

(continued)

BASES

SURVEILLANCE REQUIREMENTS (continued)	Whenever the STC is in the spent fuel pool a measurement of spent fuel pool boron concentration is equivalent to an STC boron concentration measurement.

REFERENCES

1. Holtec Report HI-2094289, Licensing Report on the Inter-Unit Transfer of Spent Nuclear Fuel at Indian Point Energy Center, Revision 3.

2. Double contingency principle of ANSI N16.1-1975, as specified in the April 14, 1978 NRC letter (Section 1.2) and implied in the proposed revision to Regulatory Guide 1.13 (Section 1.4, Appendix A).

B 3.1 INTER-UNIT FUEL TRANSFER

B 3.1.2 Shielded Transfer Canister (STC) Loading

BASES

BACKGROUND

As required by plant operations IP3 spent fuel is transferred to the IP2 spent fuel pit in order to maintain adequate fuel storage capacity in the IP3 spent fuel pit. IP3 spent fuel moved to the IP2 spent fuel pit is subsequently transferred to dry cask storage at the IPEC on-site Independent Spent Fuel Storage Installation (ISFSI) as part of spent fuel inventory management in the IP2 spent fuel pit. This inter-unit transfer is necessary because the cask handling crane at IP3 does not have high enough load-bearing capacity to lift and handle the dry storage transfer cask and canister.

Inter-unit fuel transfer operations are conducted using the Shielded Transfer Canister (STC) and the HI-TRAC 100D transfer cask. The STC is a bolted-lid pressure vessel with an internal fuel basket that accommodates up to twelve IP3 spent fuel assemblies. The STC is loaded in the IP3 spent fuel pit, placed into the HI-TRAC transfer cask in the Fuel Storage Building (FSB) truck bay, and moved outside the truck bay on air pads or other approved conveyance. The STC/HI-TRAC assemblage is transported from outside the IP3 FSB truck bay to just outside the IP2 FSB truck bay with a vertical cask transporter (VCT) and moved into the IP2 FSB truck bay on a low profile transporter.

The STC is removed from the HI-TRAC using the cask handling crane and placed into the IP2 spent fuel pit. The STC lid is removed and the IP3 fuel assemblies are moved to their designated IP2 wet storage rack cell locations with the spent fuel bridge crane.

Fuel assemblies to be transferred are chosen at IP3 based on the requirements for loading in the STC. The STC fuel loading requirements are such that the fuel chosen for transfer to IP2 is suitable for storage in the IP2 spent fuel pits storage racks and there are open fuel cells available. Fuel move sheets will govern the transfer of the spent fuel from IP3 to IP2.

In the STC design, the fuel basket is divided rectilinearly into twelve cells as shown in Figure 3.1.2-1, "Shielded Transfer Canister Layout (Top View)". All cells are sized to contain IP3 spent fuel assemblies. All cells are designed and

(continued)

BASES

BACKGROUND (continued)

analyzed for fuel of a certain enrichment, burnup, cooling time, and decay heat. The inner cells are designed and analyzed to contain fuel with slightly higher burnup and shorter cooling time. The fuel in the outer cells provides shielding for the fuel in the inner cells.

Prior to placing the fuel in the STC, the fuel assemblies are classified as to the level of reactivity based on the initial enrichment and burnup. This classification is made using Table 3.1.2-1, "Minimum Burnup Requirements at Varying Initial Enrichments". This classification is used to determine if the fuel assembly may be placed in the STC and where it can be placed.

Table 3.1.2-1 is used to classify each assembly into one of the following categories based on initial U-235 enrichment and average assembly burnup:

Type 2 assemblies are relatively less reactive assemblies and include any assembly that meets the minimum assembly average burnup at a given initial enrichment of Table 3.1.2-1. Type 2 assemblies may be stored in any cell in the STC.

Additional constraints on Type 2 fuel are:

1) Post-irradiation cooling time ≥ 5 years
2) Average burnup per assembly ≤ 55,000 MWD/MTU
3) Decay heat including non fuel hardware ≤ 650 Watts may be placed in any STC cell
4) Decay heat including non fuel hardware ≤ 1105 Watts may only be placed in inner cells (1, 2, 3, or 4).
5) Post-irradiation cooling time and the maximum average burnup of non fuel hardware shall be within the cell locations and limits specified in Table 3.1.2-2.

Type 1 assemblies are relatively more reactive assemblies and include any assembly that does not meet the minimum assembly average burnup at a given initial enrichment of Table 3.1.2-1. Type 1 fuel <u>must</u> be placed in the outer cells (5, 6, 7, 8, 9, 10, 11, or 12) of the STC to preserve the assumptions of the design basis criticality analysis.

Additional constraints on Type 1 fuel are:

1) Post-irradiation cooling time ≥ 5 years
2) Average burnup per assembly ≤ 55,000 MWD/MTU
3) Decay heat including non fuel hardware ≤ 650 Watts

(continued)

BASES

BACKGROUND (continued)

Together, the limits on Type 1 and Type 2 ensure the criticality, shielding, and thermal analyses remain bounding.

Fuel assemblies with an initial enrichment > 5.0 wt% U-235 are not shown on Table 3.1.2-1 and cannot be placed in the STC in accordance with TS 3.1.2.

APPLICABLE SAFETY ANALYSES

The STC has been analyzed for criticality prevention, heat rejection capability, shielding, and structural integrity to ensure safe transfer operations from the time that the STC is loaded at IP3 to the time it is unloaded at IP2 (Reference 1).

The criticality analysis and the limits on fuel selection prescribed in LCO 3.1.2 ensure that the effective neutron multiplication factor (k_{eff}) of a loaded STC in its most reactive configuration remains less than 0.95.

The water in the STC will contain soluble boron at the same levels of the spent fuel pit, which results in large subcriticality margins under actual operating conditions. The effective neutron multiplication factor (keff) shall be less than 0.95 with the STC fully loaded with fuel of the highest anticipated reactivity and the STC cavity flooded with unborated water at a temperature corresponding to the highest reactivity. Hence, the design of the STC is based on the use of unborated water, which maintains the STC in a subcritical condition during normal operation with the STC fully loaded and in conformance with the fuel storage locations, enrichment and burnup assumed in the analysis and as specified by this LCO (Reference 1).

The double contingency principle discussed in ANSI N-16.1-1975 and the April 1978 NRC letter (Reference 2) allows credit for soluble boron under other abnormal or accident conditions because only a single accident need be considered at one time. For example, the accident scenarios include dropping a fuel assembly on top of the STC basket, or accidental misloading of a fuel assembly in the STC basket. These events could increase the potential for criticality in the STC.

(continued)

BASES

APPLICABLE SAFETY ANALYSES (continued)

To mitigate these postulated criticality related accidents, boron concentration is verified to be within the limits specified in LCO 3.1.1, "STC Boron Concentration".

The thermal analysis shows that the fuel cladding temperature remains below the acceptance criteria of 752°F and 1058°F, for normal and accident conditions respectively, at all times during inter-unit transfer and that the design pressure and temperature of the STC are not exceeded.

The structural analysis shows that the STC and HI-TRAC maintain their structural integrity under all normal, off-normal, and credible accident conditions. There are no radioactive material releases from the STC or HI-TRAC during any condition of operation.

The shielding analysis shows that the dose rates from the STC during the short time it is not inside the HI-TRAC are manageable with appropriate radiation protection controls. Dose rates from the loaded HI-TRAC are shown to be low.

The configuration of fuel assemblies in the STC satisfies Criterion 2 of CFR 50.36.

LCO

Fuel assemblies stored in the spent fuel pit are classified in accordance with Table 3.1.2-1 based on initial enrichment and burnup which is indicative of fuel assembly reactivity. Based on this classification, fuel assembly placement in the STC cells is restricted in accordance with the classification of the fuel and the additional constraints established by this LCO.

LCO 3.1.2.b is modified by a note stating that if one or more Type 1 assemblies are in the STC, cells 1, 2, 3, and 4 must be empty. The restriction preserves the assumptions of the bounding criticality analysis for Type 1 fuel assemblies placed only in the peripheral fuel cells.

APPLICABILITY

This LCO applies whenever one or more fuel assemblies are in the STC.

(continued)

BASES

ACTIONS

A.1

When the configuration of fuel assemblies in the STC is not in accordance with this LCO, one action is to make the necessary fuel assembly movement(s) to bring the configuration of the fuel in the STC into compliance with this LCO. This action restores the STC to an analyzed configuration.

OR

A.2

When the configuration of fuel assemblies in the STC is not in accordance with this LCO, an optional action to restore compliance with the LCO is to move the fuel assembly or assemblies from the STC back into the IP3 spent fuel pool in accordance with Appendix A Technical Specification LCO 3.7.16.

Either action places the fuel in equally safe locations.

The completion time of "Immediately" is appropriate because fuel located in the STC may be in an unanalyzed condition and action is required to be initiated and completed without delay to restore the fuel location to an analyzed configuration.

SURVEILLANCE REQUIREMENTS

SR 3.1.2.1

This SR verifies by administrative means that the fuel assembly meets the requirements of the STC location in which it is to be placed in accordance with the accompanying LCO. This SR ensures the LCO limits for fuel selection and location in the STC are met and the supporting technical analyses remain bounding for all inter-unit transfer operations.

REFERENCES

1. Holtec Report HI-2094289, Licensing Report on the Inter-Unit Transfer of Spent Nuclear Fuel at Indian Point Energy Center, Revision 3.

2. Double contingency principle of ANSI N16.1-1975, as specified in the April 14, 1978 NRC letter (Section 1.2) and implied in the proposed revision to Regulatory Guide 1.13 (Section 1.4, Appendix A).

B 3.1 INTER-UNIT FUEL TRANSFER

B 3.1.3 Shielded Transfer Canister (STC) Pressure Rise

BASES

BACKGROUND

Inter-unit fuel transfer operations are conducted using the Shielded Transfer Canister (STC) and the HI-TRAC 100D transfer cask. The STC is a bolted-lid pressure vessel with an internal fuel basket that accommodates up to twelve IP3 spent fuel assemblies. The STC is loaded in the IP3 spent fuel pit, placed into the HI-TRAC transfer cask in the Fuel Storage Building (FSB) truck bay, and moved outside the truck bay on air pads or other approved conveyance. The STC/HI-TRAC assemblage is transported from outside the IP3 FSB truck bay to just outside the IP2 FSB truck bay with a vertical cask transporter (VCT) and moved into the IP2 FSB truck bay on a low profile transporter.

The STC is removed from the HI-TRAC using the cask handling crane and placed into the IP2 spent fuel pit. The STC lid is removed and the IP3 fuel assemblies are moved to their designated IP2 wet storage rack cell locations with the spent fuel bridge crane.

Loading of fuel assemblies into the STC is controlled by LCO 3.1.2, "STC Unloading". This LCO ensures that fuel assemblies selected for placement in the STC meet design basis requirements. To provide an additional layer of assurance that the thermal payload of the STC is within design limits a fuel misload detection surveillance based on STC pressure rise is conducted prior to transfer operations. The surveillance is conducted with the loaded and sealed STC placed within the HI-TRAC inside the IP3 fuel handling building. The misload surveillance requires the pressure inside the STC to be monitored for a 24 hour duration after the STC is sealed and the open space above the STC water level is filled with steam.

APPLICABLE SAFETY ANALYSES

The accidental misloading of a high decay heat fuel assembly or the misloading of multiple assemblies would be detected based on a comparison of predicted and as measured STC pressure rise. Thermal analyses have been performed (Reference 1) that predict an STC pressure rise of no more than 4.2 psi after an STC loaded with the design basis heat load is placed in the HI-TRAC and the STC is sealed.

The STC pressure rise limit satisfies Criterion 2 of 10 CFR 50.36.

(continued)

BASES

LCO

As indicated in the Applicable Safety Analyses, the STC pressure rise is required to be ≤ 4.2 psi prior to TRANSFER OPERATIONS when the STC is in the HI-TRAC and the STC lid has been installed and the STC water level established as measured over a 24 hour period.

Monitoring the STC pressure rise ensures that should the pressure rise limit be exceeded, appropriate actions are taken in a timely manner to return the STC to the IP3 spent fuel pool.

This LCO preserves the assumptions of the safety analyses for the STC and the IP2 spent fuel pit.

APPLICABILITY

Prior to TRANSFER OPERATIONS when the STC is in the HI-TRAC and the STC lid has been installed and the STC water level established.

ACTIONS

A.1

The completion time of "Immediately" is appropriate because fuel located in the STC may be in an unanalyzed condition and action is required to be initiated and completed without delay to prevent overpressurization of the STC.

A.2.1

The completion time of 12 hours is appropriate because fuel located in the STC may be in an unanalyzed condition and action is required to be initiated and completed to restore fuel location to an analyzed configuration. This timeframe considers the time required to complete this action and that a vent path has been established.

A.2.2

Required Action A.2.2 is modified by a Note indicating that the water used for recirculation must meet the boron concentration requirement of LCO 3.1.1. This requirement preserves the assumptions of the criticality analysis.

The completion time of "Immediately" is appropriate because fuel located in the STC may be in an unanalyzed condition and action is required to be initiated without delay to prevent overpressurization of the STC.

(continued)

BASES

SURVEILLANCE REQUIREMENTS

SR 3.1.3.1

This SR verifies by direct measurement that the STC cavity pressure is within limit. As long as this SR is met, the analyzed accident is fully addressed.

REFERENCES

1. Holtec Report HI-2094289, Licensing Report on the Inter-Unit Transfer of Spent Nuclear Fuel at Indian Point Energy Center, Revision 3.

B 3.1 INTER-UNIT FUEL TRANSFER

B 3.1.4 Shielded Transfer Canister (STC) Unloading

BASES

BACKGROUND

As required by plant operations IP3 spent fuel is transferred to the IP2 spent fuel pit in order to maintain adequate fuel storage capacity in the IP3 spent fuel pit. IP3 spent fuel moved to the IP2 spent fuel pit is subsequently transferred to dry cask storage at the IPEC on-site Independent Spent Fuel Storage Installation (ISFSI) as part of spent fuel inventory management in the IP2 spent fuel pit. This inter-unit transfer is necessary because the cask handling crane at IP3 does not have high enough load-bearing capacity to lift and handle the dry storage transfer cask and canister.

Inter-unit fuel transfer operations are conducted using the Shielded Transfer Canister (STC) and the HI-TRAC 100D transfer cask. The STC is a bolted-lid pressure vessel with an internal fuel basket that accommodates up to twelve IP3 spent fuel assemblies. The STC is loaded in the IP3 spent fuel pit, placed into the HI-TRAC transfer cask in the Fuel Storage Building (FSB) truck bay, and moved outside the truck bay on air pads or other approved conveyance. The STC/HI-TRAC assemblage is transported from outside the IP3 FSB truck bay to just outside the IP2 FSB truck bay with a vertical cask transporter (VCT) and moved into the IP2 FSB truck bay on a low profile transporter.

The STC is removed from the HI-TRAC using the cask handling crane and placed into the IP2 spent fuel pit. The STC lid is removed and the IP3 fuel assemblies are moved to their designated IP2 wet storage rack cell locations with the spent fuel bridge crane.

Fuel assemblies to be transferred are chosen at IP3 based on the requirements for loading in the STC as specified in LCO 3.1.2. The STC fuel loading requirements are such that the fuel chosen for transfer to IP2 is suitable for storage in the IP2 spent fuel pits storage racks and there are open fuel cells available. Fuel move sheets will govern the transfer of the spent fuel from IP3 to IP2.

(continued)

BASES

APPLICABLE SAFETY ANALYSES

The STC has been analyzed for criticality prevention, heat rejection capability, shielding, and structural integrity to ensure safe transfer operations from the time that the STC is loaded at IP3 to the time it is unloaded at IP2 (Reference 1).

The criticality analysis and the limits on fuel selection prescribed in LCO 3.1.2 ensure that the effective neutron multiplication factor (k_{eff}) of a loaded STC in its most reactive configuration remains less than 0.95.

The water in the STC will contain soluble boron at the same levels of the spent fuel pit, which results in large subcriticality margins under actual operating conditions. The effective neutron multiplication factor (keff) shall be less than 0.95 with the STC fully loaded with fuel of the highest anticipated reactivity and the STC cavity flooded with unborated water at a temperature corresponding to the highest reactivity. Hence, the design of the STC is based on the use of unborated water, which maintains the STC in a subcritical condition during normal operation with the STC fully loaded and in conformance with the fuel storage locations, enrichment and burnup assumed in the analysis and as specified by this LCO (Reference 1).

The double contingency principle discussed in ANSI N-16.1-1975 and the April 1978 NRC letter (Reference 2) allows credit for soluble boron under other abnormal or accident conditions because only a single accident need be considered at one time. For example, the accident scenarios include dropping a fuel assembly on top of the STC basket, or accidental misloading of a fuel assembly in the STC basket. These events could increase the potential for criticality in the STC.

To mitigate these postulated criticality related accidents, boron concentration is verified to be within the limits specified in LCO 3.1.1, "STC Boron Concentration".

The thermal analysis shows that the fuel cladding temperature remains below the acceptance criteria of 752°F and 1058°F, for normal and accident conditions respectively, at all times during inter-unit transfer and that the design pressure and temperature of the STC are not exceeded.

The structural analysis shows that the STC and HI-TRAC maintain their structural integrity under all normal, off-normal, and credible accident conditions. There are no radioactive material releases from the STC or HI-TRAC during any condition of operation.

(continued)

BASES

APPLICABLE SAFETY ANALYSIS (continued)

The shielding analysis shows that the dose rates from the STC during the short time it is not inside the HI-TRAC are manageable with appropriate radiation protection controls. Dose rates from the loaded HI-TRAC are shown to be low.

The configuration of fuel assemblies in the STC satisfies Criterion 2 of CFR 50.36.

LCO

LCO 3.1.4 governs the presence of the STC in the IP2 spent fuel pit. The STC arrives at IP2 with its bolted lid in place, which preserves the fuel types and fuel locations established at IP3 when the STC was loaded. Once the STC lid is removed at IP2, this LCO requires that a transferred fuel assembly be in one of three places:

1. In an approved IP2 spent fuel pit storage rack location per Appendix A TS LCO 3.7.13, or
2. In an authorized STC fuel basket cell, or
3. In transit between these two locations

This LCO preserves the assumptions of the safety analyses for the STC and the IP2 spent fuel pit.

This LCO is modified by three notes. Note 1 specifies that only IP3 spent fuel assemblies are permitted to be in the STC. The STC design and analysis is based on IP3 fuel assemblies. Loading of IP2 fuel assemblies in the STC is not authorized. Note 2 specifies that once each IP3 spent fuel assembly is removed from the STC and placed in an IP2 spent fuel pit storage rack location and released from the spent fuel bridge crane, it may not be returned to the STC. This note prevents loading IP3 fuel out of the IP2 spent fuel pit for transfer back to the STC or the IP3 spent fuel pit. This is not an authorized evolution. Note 3 specifies that for fuel assemblies exposed to Hafnium inserts during irradiation the burnup of the assembly shall be the burnup prior to the exposure to the Hafnium insert. Hafnium inserts for flux suppression were only used in IP3. Those inserts were only used in a limited number of assemblies at the periphery of the core. Further, they were only used for a burnup of up to about 6 GWd/MTU in each assembly. To account for the effect of those hafnium inserts in a conservative manner, the burnup of the assemblies that were exposed to them should be reduced by the exposure with hafnium inserts before comparing the value to any burnup requirements for the IP2 pool.

(continued)

BASES

LCO (continued)

For example, and assembly with 40 GWD/MTU that had a hafnium insert for 5 GWD/MTU should be considered a 35 GWD/MTU for the purpose of placing it into the IP2 pool (Ref. 1).

APPLICABILITY

The LCO is applicable whenever the STC is in the IP2 spent fuel pit.

ACTIONS

A.1

When any IP3 spent fuel assembly transferred to the IP2 spent fuel pit is not in one of the three authorized locations, LCO 3.1.4 is not met. Required Action A.1 specifies that action begin immediately to restore compliance with the LCO. The affected fuel assemblies must be placed in an authorized location without delay.

The completion time of "Immediately" is appropriate because fuel located in the STC or the spent fuel pit racks may be in an unanalyzed condition and action is required to be initiated and completed without delay to restore fuel location to an analyzed configuration.

SURVEILLANCE REQUIREMENTS

SR 3.1.4.1

SR 3.1.4.1 requires that any IP3 fuel assembly being returned to the STC be verified by administrative means to have been returned to the same STC fuel cell location from which it was removed. This SR ensures that the loading pattern authorized when the STC was loaded at IP3 is preserved.

This SR does not require the same verification for placing the fuel assembly in a spent fuel pit cell location because that process is governed by a separate Appendix A TS LCO 3.7.13 and a fuel move sheet is required to place the fuel assembly in any location in the storage racks.

REFERENCES

1. Holtec Report HI-2094289, Licensing Report on the Inter-Unit Transfer of Spent Nuclear Fuel at Indian Point Energy Center, Revision 3.

ATTACHMENT 7 TO NL-10-093

Indian Point Unit 3
Appendix C to the Operating License
Inter-Unit Fuel Transfer Technical Specifications

Entergy Nuclear Operations, Inc.
Indian Point Unit 3
Docket No. 50-286

APPENDIX C

TO

FACILITY OPERATING LICENSE

FOR

ENTERGY NUCLEAR INDIAN POINT 3, LLC (ENIP3)

AND

ENTERGY NUCLEAR OPERATIONS, INC. (ENO)

INDIAN POINT 3 NUCLEAR

POWER PLANT

INTER-UNIT FUEL TRANSFER TECHNICAL SPECIFICATIONS

PART I: SPENT FUEL TRANSFER CANISTER AND TRANSFER CASK SYSTEM

FACILITY LICENSE NO. DPR-64

DOCKET NO. 50-286

Amendment No.

SPENT FUEL SHIELDED TRANSFER CANISTER AND TRANSFER CASK SYSTEM

1.0 DESCRIPTION

The spent fuel transfer system consists of the following components: (1) a spent fuel shielded transfer canister (STC), which contains the fuel; (2) a transfer cask (HI-TRAC 100D) (hereafter referred to as HI-TRAC), which contains the STC during transfer operations; and (3) a bottom missile shield.

The STC and HI-TRAC are designed to transfer irradiated nuclear fuel assemblies from the Indian Point 3 (IP3) spent fuel pit to the Indian Point 2 (IP2) spent fuel pit. A fuel basket within the STC holds the fuel assemblies and provides criticality control. The shielded transfer canister provides the confinement boundary, water retention boundary, gamma radiation shielding, and heat rejection capability. The HI-TRAC provides a water retention boundary, protection of the STC, gamma and neutron radiation shielding, and heat rejection capability. The STC contains up to 12 fuel assemblies.

The STC is the confinement system for the fuel. It is a welded, multi-layer steel and lead cylinder with a welded base-plate and bolted lid. The inner shell of the canister forms an internal cylindrical cavity for housing the fuel basket. The outer surface of the canister inner shell is buttressed with lead and steel shells for radiation shielding. The minimum thickness of the steel, lead and steel shells relied upon for shielding starting with the innermost shell are ¾ inch steel, 2 ¾ inch lead and ⅜ inch steel, respectively. The canister closure incorporates two O-ring seals to ensure its confinement function. The confinement system consists of the canister inner shell, bottom plate, top flange, top lid, top lid O-ring seals, vent port seal and cover plate, and drain port seal and coverplate. The fuel basket, for the transfer of 12 Pressurized Water Reactor (PWR) fuel assemblies, is a fully welded, stainless steel, honeycomb structure with neutron absorber panels attached to the individual storage cell walls under stainless steel sheathing. The maximum gross weight of the fully loaded STC is 40 tons.

The HI-TRAC is a multi-layer steel and lead cylinder with a bolted bottom (or pool) and top lid. For the fuel transfer operation the HI-TRAC is fitted with a solid top lid, an STC centering assembly, and a bottom missile shield. The inner shell of the transfer cask forms an internal cylindrical cavity for housing the STC. The outer surface of the cask inner shell is buttressed with intermediate lead and steel shells for radiation shielding. The minimum thickness of the steel, lead and steel shells relied upon for shielding starting with the innermost shell are ¾ inch steel, 2 ⅞inch lead and 1 inch steel, respectively. An outside shell called the "water jacket" contains water for neutron shielding. The HI-TRAC bottom and top lids incorporates a gasket seal design to ensure its water confinement function. The water confinement system consists of the HI-TRAC inner shell, bottom lid, top lid, top lid seal, bottom lid seal, vent port seal, vent port cap and bottom drain plug.

The HI-TRAC provides a water retention boundary, protection of the STC, gamma and neutron radiation shielding, and heat rejection capability. The bottom missile shield is attached to the bottom of the HI-TRAC and provides tornado missile protection of the pool lid bolted joint. The HI-TRAC can withstand a tornado missile in other areas without the need for additional shielding. The STC centering assembly provides STC position control within the HI-TRAC and also acts as an internal impact limiter in the event of a non-mechanistic tipover accident.

2.0 CONDITIONS

2.1 OPERATING PROCEDURES

Written operating procedures shall be prepared for cask handling, loading, movement, surveillance, and maintenance. The written operating procedures shall be consistent with the technical basis described in Chapter 9 of the IP2 and IP3 UFSARs.

2.2 ACCEPTANCE TESTS AND MAINTENANCE PROGRAM

Written cask acceptance tests and maintenance program shall be prepared consistent with the technical basis described in Chapter 9 of the IP2 and IP3 UFSARs.

2.3 PRE-OPERATIONAL TESTING AND TRAINING EXERCISE

A dry run training exercise of the loading, closure, handling/transfer, and unloading, of the equipment shall be conducted prior to the first transfer. The training exercise shall not be conducted with irradiated fuel. The dry run may be performed in an alternate step sequence from the actual procedures, but all steps must be performed. The dry run shall include, but is not limited to the following:

a) Moving the STC into the IP3 spent fuel pool.
b) Preparation of the HI-TRAC for STC loading.
c) Selection and verification of specific fuel assemblies and non-fuel hardware to ensure type conformance.
d) Loading specific assemblies and placing assemblies into the STC (using a single dummy fuel assembly), including appropriate independent verification.
e) Remote installation of the STC lid and removal of the STC from the spent fuel pool.
f) Placement of the STC into the HI-TRAC with the STC centering assembly.
g) STC closure, establishment of STC water level with steam, verification of STC water level, STC leakage testing, and operational steps required prior to transfer, as applicable.
h) Establishment and verification of HI-TRAC water level.
i) Installation of the HI-TRAC top lid.
j) HI-TRAC closure, leakage testing, and operational steps required prior to transfer, as applicable.
k) Movement of the HI-TRAC with STC from the IP3 fuel handling building to the IP2 fuel handling building along the haul route with designated devices.
l) Moving the STC into the IP2 spent fuel pool.

APPENDIX C

TO

FACILITY OPERATING LICENSE

FOR

ENTERGY NUCLEAR INDIAN POINT 3, LLC (ENIP3)

AND

ENTERGY NUCLEAR OPERATIONS, INC. (ENO)

INDIAN POINT 3 NUCLEAR

POWER PLANT

INTER-UNIT FUEL TRANSFER TECHNICAL SPECIFICATIONS

PART II: TECHNICAL SPECIFICATIONS

FACILITY LICENSE NO. DPR-64

DOCKET NO. 50-286

Amendment No.

TABLE OF CONTENTS

1.0 USE AND APPLICATION

1.1 Definitions

----------NOTE----------
The defined terms of this section appear in capitalized type and are applicable throughout these Technical Specifications and Bases.

Term	Definition
ACTIONS	ACTIONS shall be that part of a Specification that prescribes Required Actions to be taken under designated Conditions within specified Completion Times.
INTACT FUEL ASSEMBLIES	INTACT FUEL ASSEMBLIES are fuel assemblies without known or suspected cladding defects greater than pinhole leaks or hairline cracks, and which can be handled by normal means. Fuel assemblies without fuel rods in fuel rod locations shall not be classified as INTACT FUEL ASSEMBLIES unless dummy fuel rods are used to displace an amount of water greater than or equal to that displaced by the original fuel rod(s).
LOADING OPERATIONS	LOADING OPERATIONS include all licensed activities on an STC while it is being loaded with fuel assemblies and while the STC is being placed in the HI-TRAC. LOADING OPERATIONS begin when the first fuel assembly is placed in the STC and end when the HI-TRAC is suspended from or secured on the TRANSPORTER.
NON-FUEL HARDWARE (NFH)	NON-FUEL HARDWARE is defined as Burnable Poison Rod Assemblies (BPRAs), Thimble Plug Devices (TPDs), Wet Annular Burnable Absorbers (WABAs), Rod Cluster Control Assemblies (RCCAs), Neutron Source Assemblies (NSAs) and Hafnium Suppressors.
TRANSFER OPERATIONS	TRANSFER OPERATIONS include all licensed activities performed on a HI-TRAC loaded with one or more fuel assemblies when it is being moved after LOADING OPERATIONS or before UNLOADING OPERATIONS. TRANSFER OPERATIONS begin when the HI-TRAC is first suspended from or secured on the transporter and end when the TRANSPORTER is at its destination and the HI-TRAC is no longer secured on or suspended from the transporter.
TRANSPORTER	TRANSPORTER is the device or vehicle which moves the HI-TRAC. The TRANSPORTER can either support the HI-TRAC from underneath or the HI-TRAC can be suspended from it.

(continued)

1.1 Definitions (continued)

Term	Definition
UNLOADING OPERATIONS	UNLOADING OPERATIONS include all licensed activities on an STC or HI-TRAC while it is being unloaded of the contained fuel assemblies. UNLOADING OPERATIONS begin when the HI-TRAC is no longer suspended from or secured on the TRANSPORTER and end when the last fuel assembly is removed from the STC.
ZR	ZR means any zirconium-based fuel cladding authorized for use in a commercial nuclear power plant reactor.

1.0 USE AND APPLICATION

1.2 Logical Connectors

PURPOSE	The purpose of this section is to explain the meaning of logical connectors. Logical connectors are used in Technical Specifications (TS) to discriminate between, and yet connect, discrete Conditions, Required Actions, Completion Times, Surveillances, and Frequencies. The only logical connectors that appear in TS are AND and OR. The physical arrangement of these connectors constitutes logical conventions with specific meanings.
BACKGROUND	Several levels of logic may be used to state Required Actions. These levels are identified by the placement (or nesting) of the logical connectors and by the number assigned to each Required Action. The first level of logic is identified by the first digit of the number assigned to a Required Action and the placement of the logical connector in the first level of nesting (i.e., left justified with the number of the Required Action). The successive levels of logic are identified by additional digits of the Required Action number and by successive indentions of the logical connectors. When logical connectors are used to state a Condition, Completion Time, Surveillance, or Frequency, only the first level of logic is used, and the logical connector is left justified with the statement of the Condition, Completion Time, Surveillance, or Frequency.

(continued)

1.2 Logical Connectors (continued)

EXAMPLES

The following examples illustrate the use of logical connectors.

EXAMPLE 1.2-1

ACTIONS

CONDITION	REQUIRED ACTION	COMPLETION TIME
A. LCO not met.	A.1 VERIFY . . . AND A.2 Restore . . .	

In this example the logical connector AND is used to indicate that when in Condition A, both Required Actions A.1 and A.2 must be completed.

(continued)

1.2 Logical Connectors (continued)

EXAMPLES (continued)

EXAMPLE 1.2-2

ACTIONS

CONDITION	REQUIRED ACTION		COMPLETION TIME
A. LCO not met.	A.1	Stop . . .	
	OR		
	A.2.1	Verify . . .	
	AND		
	A.2.2.1	Reduce . . .	
		OR	
	A.2.2.2	Perform . . .	
	OR		
	A.3	Remove . . .	

This example represents a more complicated use of logical connectors. Required Actions A.1, A.2, and A.3 are alternative choices, only one of which must be performed as indicated by the use of the logical connector OR and the left justified placement. Any one of these three ACTIONS may be chosen. If A.2 is chosen, then both A.2.1 and A.2.2 must be performed as indicated by the logical connector AND. Required Action A.2.2 is met by performing A.2.2.1 or A.2.2.2. The indented position of the logical connector OR indicates that A.2.2.1 and A.2.2.2 are alternative choices, only one of which must be performed.

1.0 USE AND APPLICATION

1.3 Completion Times

PURPOSE	The purpose of this section is to establish the Completion Time convention and to provide guidance for its use.
BACKGROUND	Limiting Conditions for Operation (LCOs) specify the lowest functional capability or performance levels of equipment required for safe operation of the facility. The ACTIONS associated with an LCO state Conditions that typically describe the ways in which the requirements of the LCO can fail to be met. Specified with each stated Condition are Required Action(s) and Completion Times(s).
DESCRIPTION	The Completion Time is the amount of time allowed for completing a Required Action. It is referenced to the time of discovery of a situation (e.g., equipment or variable not within limits) that requires entering an ACTIONS Condition unless otherwise specified, providing the Spent Fuel Shielded Transfer Canister and Transfer Cask System is in a specified condition stated in the Applicability of the LCO. Required Actions must be completed prior to the expiration of the specified Completion Time. An ACTIONS Condition remains in effect and the Required Actions apply until the Condition no longer exists or the Spent Fuel Shielded Transfer Canister and Transfer Cask System is not within the LCO Applicability. Once a Condition has been entered, subsequent subsystems, components, or variables expressed in the Condition, discovered to be not within limits, will <u>not</u> result in separate entry into the Condition unless specifically stated. The Required Actions of the Condition continue to apply to each additional failure, with Completion Times based on initial entry into the Condition.

(continued)

1.3 Completion Times (continued)

EXAMPLES

The following examples illustrate the use of Completion Times with different types of Conditions and changing Conditions.

EXAMPLE 1.3-1

ACTIONS

CONDITION	REQUIRED ACTION	COMPLETION TIME
B. Required Action and associated Completion Time not met.	B.1 Perform Action B.1	12 hours
	AND	
	B.2 Perform Action B.2	36 hours

Condition B has two Required Actions. Each Required Action has its own separate Completion Time. Each Completion Time is referenced to the time that Condition B is entered.

The Required Actions of Condition B are to complete action B.1 within 12 hours AND complete action B.2 within 36 hours. A total of 12 hours is allowed for completing action B.1 and a total of 36 hours (not 48 hours) is allowed for completing action B.2 from the time that Condition B was entered. If action B.1 is completed within 6 hours, the time allowed for completing action B.2 is the next 30 hours because the total time allowed for completing action B.2 is 36 hours.

(continued)

1.3 Completion Times (continued)

EXAMPLES (continued)

EXAMPLE 1.3-2

ACTIONS

CONDITION	REQUIRED ACTION	COMPLETION TIME
A. One system not within limit.	A.1 Restore system to within limit.	7 days
B. Required Action and associated Completion Time not met.	B.1 Complete action B.1. AND B.2 Complete action B.2.	12 hours 36 hours

When a system is determined not to meet the LCO, Condition A is entered. If the system is not restored within 7 days, Condition B is also entered and the Completion Time clocks for Required Actions B.1 and B.2 start. If the system is restored after Condition B is entered, Conditions A and B are exited, and therefore, the Required Actions of Condition B may be terminated.

(continued)

1.3 Completion Times (continued)

EXAMPLES (continued)

EXAMPLE 1.3-3

ACTIONS

----------NOTE----------
Separate Condition entry is allowed for each component.

CONDITION	REQUIRED ACTION	COMPLETION TIME
A. LCO not met.	A.1 Restore compliance with LCO.	4 hours
B. Required Action and associated Completion Time not met.	B.1 Complete action B.1. AND B.2 Complete action B.2.	6 hours 12 hours

The Note above the ACTIONS table is a method of modifying how the Completion Time is tracked. If this method of modifying how the Completion Time is tracked was applicable only to a specific Condition, the Note would appear in that Condition rather than at the top of the ACTIONS Table.

The Note allows Condition A to be entered separately for each component, and Completion Times tracked on a per component basis. When a component is determined to not meet the LCO, Condition A is entered and its Completion Time starts. If subsequent components are determined to not meet the LCO, Condition A is entered for each component and separate Completion Times start and are tracked for each component.

(continued)

1.3 Completion Times (continued)

IMMEDIATE COMPLETION TIME	When "Immediately" is used as a Completion Time, the Required Action should be pursued without delay and in a controlled manner.

1.0 USE AND APPLICATION

1.4 Frequency

PURPOSE	The purpose of this section is to define the proper use and application of Frequency requirements.
DESCRIPTION	Each Surveillance Requirement (SR) has a specified Frequency in which the Surveillance must be met in order to meet the associated Limiting Condition for Operation (LCO). An understanding of the correct application of the specified Frequency is necessary for compliance with the SR. The "specified Frequency" is referred to throughout this section and each of the Specifications of Section 3.0, Surveillance Requirement (SR) Applicability. The "specified Frequency" consists of the requirements of the Frequency column of each SR. Situations where a Surveillance could be required (i.e., its Frequency could expire), but where it is not possible or not desired that it be performed until sometime after the associated LCO is within its Applicability, represent potential SR 3.0.4 conflicts. To avoid these conflicts, the SR (i.e., the Surveillance or the Frequency) is stated such that it is only "required" when it can be and should be performed. With an SR satisfied, SR 3.0.4 imposes no restriction.

(continued)

1.4 Frequency (continued)

EXAMPLES

The following examples illustrate the various ways that Frequencies are specified.

EXAMPLE 1.4-1

SURVEILLANCE REQUIREMENTS

SURVEILLANCE	FREQUENCY
Verify pressure within limit	12 hours

Example 1.4-1 contains the type of SR most often encountered in the Technical Specifications (TS). The Frequency specifies an interval (12 hours) during which the associated Surveillance must be performed at least one time. Performance of the Surveillance initiates the subsequent interval. Although the Frequency is stated as 12 hours, an extension of the time interval to 1.25 times the interval specified in the Frequency is allowed by SR 3.0.2 for operational flexibility. The measurement of this interval continues at all times, even when the SR is not required to be met per SR 3.0.1 (such as when the equipment or variables are outside specified limits, or the facility is outside the Applicability of the LCO). If the interval specified by SR 3.0.2 is exceeded while the facility is in a condition specified in the Applicability of the LCO, the LCO is not met in accordance with SR 3.0.1.

If the interval as specified by SR 3.0.2 is exceeded while the facility is not in a condition specified in the Applicability of the LCO for which performance of the SR is required, the Surveillance must be performed within the Frequency requirements of SR 3.0.2 prior to entry into the specified condition. Failure to do so would result in a violation of SR 3.0.4

(continued)

1.4 Frequency (continued)

EXAMPLES (continued)

EXAMPLE 1.4-2

SURVEILLANCE REQUIREMENTS

SURVEILLANCE	FREQUENCY
Verify flow is within limits.	Once within 12 hours prior to starting activity AND 24 hours thereafter

Example 1.4-2 has two Frequencies. The first is a one time performance Frequency, and the second is of the type shown in Example 1.4-1. The logical connector "AND" indicates that both Frequency requirements must be met. Each time the example activity is to be performed, the Surveillance must be performed within 12 hours prior to starting the activity.

The use of "once" indicates a single performance will satisfy the specified Frequency (assuming no other Frequencies are connected by "AND"). This type of Frequency does not qualify for the 25% extension allowed by SR 3.0.2.

"Thereafter" indicates future performances must be established per SR 3.0.2, but only after a specified condition is first met (i.e., the "once" performance in this example). If the specified activity is canceled or not performed, the measurement of both intervals stops. New intervals start upon preparing to restart the specified activity.

2.0 NOT USED

This section is intentionally left blank

3.0 LIMITING CONDITIONS FOR OPERATION (LCO) APPLICABILITY

LCO 3.0.1	LCOs shall be met during specified conditions in the Applicability, except as provided in LCO 3.0.2.
LCO 3.0.2	Upon discovery of a failure to meet an LCO, the Required Actions of the associated Conditions shall be met, except as provided in LCO 3.0.5. If the LCO is met or is no longer applicable prior to expiration of the specified Completion Time(s), completion of the Required Action(s) is not required, unless otherwise stated.
LCO 3.0.3	Not applicable.
LCO 3.0.4	When an LCO is not met, entry into a specified condition in the Applicability shall not be made except when the associated ACTIONS to be entered permit continued operation in the specified condition in the Applicability for an unlimited period of time. This Specification shall not prevent changes in specified conditions in the Applicability that are required to comply with ACTIONS or that are related to the unloading of an STC.
LCO 3.0.5	Equipment removed from service or not in service in compliance with ACTIONS may be returned to service under administrative control solely to perform testing required to demonstrate it meets the LCO or that other equipment meets the LCO. This is an exception to LCO 3.0.2 for the system returned to service under administrative control to perform the testing.

3.0 SURVEILLANCE REQUIREMENT (SR) APPLICABILITY

SR 3.0.1	SRs shall be met during the specified conditions in the Applicability for individual LCOs, unless otherwise stated in the SR. Failure to meet a Surveillance, whether such failure is experienced during the performance of the Surveillance or between performances of the Surveillance, shall be failure to meet the LCO. Failure to perform a Surveillance within the specified Frequency shall be failure to meet the LCO except as provided in SR 3.0.3. Surveillances do not have to be performed on equipment or variables outside specified limits.
SR 3.0.2	The specified Frequency for each SR is met if the Surveillance is performed within 1.25 times the interval specified in the Frequency, as measured from the previous performance or as measured from the time a specified condition of the Frequency is met. For Frequencies specified as "once," the above interval extension does not apply. If a Completion Time requires periodic performance on a "once per..." basis, the above Frequency extension applies to each performance after the initial performance. Exceptions to this Specification are stated in the individual Specifications.
SR 3.0.3	If it is discovered that a Surveillance was not performed within its specified Frequency, then compliance with the requirement to declare the LCO not met may be delayed, from the time of discovery, up to 24 hours or up to the limit of the specified Frequency, whichever is less. This delay period is permitted to allow performance of the Surveillance. If the Surveillance is not performed within the delay period, the LCO must immediately be declared not met, and the applicable Condition(s) must be entered. When the Surveillance is performed within the delay period and the Surveillance is not met, the LCO must immediately be declared not met, and the applicable Condition(s) must be entered.
SR 3.0.4	Entry into a specified condition in the Applicability of an LCO shall not be made unless the LCO's Surveillances have been met within their specified Frequency. This provision shall not prevent entry into specified conditions in the Applicability that are required to comply with Actions or that are related to the unloading of an STC.

3.1 INTER-UNIT FUEL TRANSFER

3.1.1 Shielded Transfer Canister (STC) Boron Concentration

LCO 3.1.1 The boron concentration of the water in the STC shall be ≥ 2000 ppm.

APPLICABILITY: Whenever one or more fuel assemblies are in the STC.

ACTIONS

CONDITION	REQUIRED ACTION	COMPLETION TIME
A. STC boron concentration not within limit.	A.1 Suspend LOADING OPERATIONS or UNLOADING OPERATIONS.	Immediately
	AND	
	A.2 Suspend positive reactivity additions.	Immediately
	AND	
	A.3 Initiate action to restore boron concentration to within limit.	Immediately

SURVEILLANCE REQUIREMENTS

SURVEILLANCE	FREQUENCY
----------NOTE---------- This surveillance is only required to be performed if the STC is submerged in water or if water is to be added to, or recirculated through, the STC. Water added to, or recirculated through, the STC must meet the boron concentration requirement of LCO 3.1.1. ----------	
SR 3.1.1.1 Verify the STC boron concentration is within limit using two independent measurements.	Once, within 4 hours prior to entering the Applicability of this LCO. AND Once per 48 hours thereafter.

3.1 INTER-UNIT FUEL TRANSFER

3.1.2 Shielded Transfer Canister (STC) Loading

LCO 3.1.2 INTACT FUEL ASSEMBLIES placed into the Shielded Transfer Canister (STC) shall be classified in accordance with Table 3.1.2-1 based on initial enrichment and burnup and shall be restricted based on the following:

a. INTACT FUEL ASSEMBLIES classified as Type 2 may be placed in any location of the STC basket (see Figure 3.1.2-1) with the following restrictions:

1. Post-irradiation cooling time ≥ 5 years;
2. Fuel assembly average burnup ≤ 55,000 MWD/MTU;
3. Decay heat including non fuel hardware ≤ 650 Watts (any cell);
4. Decay heat including non fuel hardware ≤ 1105 Watts (cell 1, 2, 3 or 4).
5. Post-irradiation cooling time and the maximum average burnup of non fuel hardware shall be within the cell locations and limits specified in Table 3.1.2-2.

b. INTACT FUEL ASSEMBLIES classified as Type 1 or Type 2 may be placed in locations 5, 6, 7, 8, 9, 10, 11, 12 of the STC basket (see Figure 3.1.2-1) with the following restrictions:

1. Post-irradiation cooling time ≥ 5 years;
2. Fuel assembly average burnup ≤ 55,000 MWD/MTU;
3. Decay heat including non fuel hardware ≤ 650 Watts.

- NOTE -

If one or more Type 1 fuel assemblies are in the STC, cells 1, 2, 3, AND 4 must be empty.

APPLICABILITY: Whenever one or more fuel assemblies are in the STC.

ACTIONS

CONDITION	REQUIRED ACTION	COMPLETION TIME
A. One or more fuel assemblies in the STC do not meet the LCO limits.	A.1.1 Initiate action to restore compliance with LCO 3.1.2. OR A.1.2 Initiate action to move fuel to the IP3 spent fuel pit in accordance with IP3 Appendix A Technical Specification LCO 3.7.16.	Immediately

SURVEILLANCE REQUIREMENTS

SURVEILLANCE	FREQUENCY
SR 3.1.2.1 Verify by administrative means that the fuel assembly meets the requirements specified in the LCO for placement in the STC.	Prior to placing the fuel assembly in the STC.

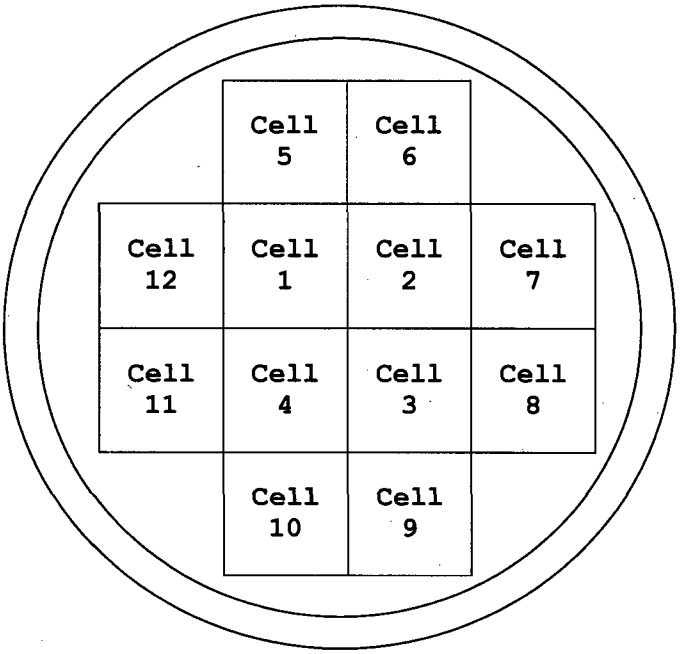

Figure 3.1.2-1
Shielded Transfer Canister Layout
(Top View)

Table 3.1.2-1
Minimum Burnup Requirements at Varying Initial Enrichments[a]

Maximum Assembly Initial Enrichment (wt% U235)	Configuration A[c] Minimum Assembly Average Burnup (MWD/MTU)[b]	Configuration B[d] Minimum Assembly Average Burnup (MWD/MTU)[b]
2.0	3,200	3,900
2.5	11,600	16,700
3.0	20,000	26,400
3.5	27,900	35,100
4.0	34,700	42,500
4.5	40,600	50,200
5.0	46,600	58,200

(a) Fuel that does not meet the minimum assembly average burnup at a given initial enrichment is classified as Type 1 fuel. Fuel that meets the minimum assembly average burnup at a given initial enrichment is classified as Type 2 fuel.

(b) Linear interpolation between enrichment levels to determine minimum burnup requirements is permitted. The maximum fuel assembly average burnup is limited to 55,000 MWD/MTU and the maximum value of 58,200 MWD/MTU provided in this Table is for linear interpolation purposes only.

(c) Assemblies that have not been located in any cycle under a control rod bank that was permitted to be inserted during full power operation or where it can be shown that the insertion did not exceed 8 inches below the top of the active fuel.

(d) Assemblies that have been located under a control rod bank that was permitted to be inserted during full power operation and where the insertion was more than 8 inches below the top of the active fuel.

Table 3.1.2-2

Non Fuel Hardware Post Irradiation Cooling Times and Allowable Average Burnup

NFH Type	Cooling Time (years)	Burnup (MWD/MTU)	Allowed Quantity and Location
BPRA[a]	≥ 15	≤ 30,000	Up to twelve (12) per transfer in any location
TPD	≥ 16	≤ 30,000	Up to twelve (12) per transfer in any location
RCCA	≥ 5	≤ 630,000	Up to four (4) per transfer in Cells 1, 2, 3, and/or 4
NSA	≥ 14	≤ 630,000	One per transfer in Cell 1, 2, 3, or 4

(a) Includes BPRAs, WABAs, and Hafnium suppressors

3.1 INTER-UNIT FUEL TRANSFER

3.1.3 Shielded Transfer Canister (STC) Pressure Rise

LCO 3.1.3 The pressure rise in the STC cavity shall be ≤ 4.2 psi over a 24 hour period.

APPLICABILITY: Prior to TRANSFER OPERATIONS when the STC is in the HI-TRAC and the STC lid has been installed and the STC water level established.

ACTIONS

CONDITION	REQUIRED ACTION	COMPLETION TIME
A. STC cavity pressure rise not within limit.	A.1 Establish a vent path on the STC.	Immediately
	AND	
	A.2.1 Return the STC to the spent fuel pool. OR ----------NOTE---------- Water used for recirculation must meet the boron concentration requirement of LCO 3.1.1. ----------	12 hours
	A.2.2 Begin circulation of borated water in the STC until the STC water exit temperature is < 180°F and then return the STC to the spent fuel pool.	Immediately

SURVEILLANCE REQUIREMENTS

SURVEILLANCE		FREQUENCY
SR 3.1.3.1	Verify by direct measurement that STC cavity pressure rise is within limit.	Once prior to TRANSFER OPERATIONS.

3.1 INTER-UNIT FUEL TRANSFER

3.1.4 Shielded Transfer Canister (STC) Unloading

----------NOTE----------

1. Only IP3 spent fuel assemblies are permitted to be in the STC.
2. Once each IP3 spent fuel assembly removed from the STC has been placed in an IP2 spent fuel rack location and disconnected from the spent fuel pit bridge crane, it may not be returned to the STC.
3. For fuel assemblies exposed to Hafnium inserts during irradiation the burnup of the assembly shall be the burnup prior to the exposure to the Hafnium insert.

LCO 3.1.4 IP3 spent fuel assemblies transferred to IP2 via the STC must be either in an approved IP2 spent fuel pit storage rack location per IP2 Appendix A Technical Specification LCO 3.7.13, in their authorized STC fuel basket cell, or be in transit between these two locations.

APPLICABILITY: Whenever the STC is in the Unit 2 spent fuel pit.

ACTIONS

CONDITION	REQUIRED ACTION	COMPLETION TIME
A. One or more fuel assemblies not in the required location.	A.1.1 Initiate action to restore compliance with LCO 3.1.4.	Immediately

SURVEILLANCE REQUIREMENTS

SURVEILLANCE		FREQUENCY
SR 3.1.4.1	Verify by administrative means that a fuel assembly returned to the STC has been re-loaded into the same STC cell from which it was removed.	Once, after each re-loaded fuel assembly is returned to the STC.

4.0 DESIGN FEATURES

4.1 Inter-Unit Fuel Transfer

4.1.1 Fuel Assemblies

Fuel assemblies selected for inter-unit transfer of fuel shall meet the fuel characteristics specified in Table 4.1.1-1.

4.1.2 Criticality

4.1.2.1 The Shielded Transfer Canister (STC) is designed and shall be maintained with:

a. Fuel assemblies having a maximum U-235 enrichment of 5.0 weight percent;

b. $k_{eff} \leq 0.95$ if fully flooded with unborated water;

c. A nominal 9.218 inch center-to-center distance between fuel assemblies placed in the STC basket;

d. Basket cell ID: 8.79 in. (nominal)

e. Basket cell wall thickness: 0.28 in. (nominal)

f. B_4C in the Metamic neutron absorber: ≤ 33.0 wt.% and ≥ 31.5 wt.%

g. ^{10}B loading in B_4C in the Metamic neutron absorber : ≥ 18.4%

h. Metamic panel thickness: ≥ 0.102 in.

4.1.2.2 Drainage

The STC is designed and shall be maintained to prevent inadvertent draining.

4.1.2.3 Capacity

The STC is designed and shall be maintained with a capacity of no more that 12 fuel assemblies.

4.1.3 Codes and Standards

The American Society of Mechanical Engineers Boiler and Pressure Vessel Code (ASME Code), 2004 Edition, is the governing Code for the STC, as clarified below, except for Code Sections V and IX. The latest effective editions of ASME Code Sections V and IX, including addenda, may be used for activities governed by those sections, provided a written reconciliation of the later edition against the 2004 Edition, is performed. Table 4.1.3-1 lists approved alternatives to the ASME Code for the design of the STC.

(continued)

4.0 DESIGN FEATURES (continued)

4.1.4 Geometric Arrangements and Process Variables

The following are geometric arrangements and process variables that require a one time verification as part of the inter-unit fuel transfer operation:

1. LOADING OPERATIONS, TRANSFER OPERATIONS, and UNLOADING OPERATIONS shall only be conducted with working area ambient temperatures ≥ 0°F.

2. LOADING OPERATIONS shall only be conducted when the spent fuel pit water temperature and the fuel handling building ambient temperatures are both ≤ 100°F.

3. LOADING OPERATIONS shall only be conducted when the IP3 spent fuel pit contains irradiated fuel only.

4. TRANSFER OPERATIONS shall only be conducted when the outside air temperature is ≤ 100°F.

5. TRANSFER OPERATIONS shall only be conducted when the STC trunnions are offset from the HI-TRAC trunnions in the azimuthal direction by at least 30 degrees.

6. TRANSFER OPERATIONS shall only be conducted when the STC water level is 9.5 +/- 0.5 inches below the bottom of the STC lid and the water level has been independently verified. STC water level is determined from a measurement of the volume of water expelled from the STC as the water level is established.

7. TRANSFER OPERATIONS shall only be conducted when the combined leak rate through the STC lid, vent port, and drain port confinement seals does not exceed 2.6×10^{-4} std-cm^3/s.

8. TRANSFER OPERATIONS shall only be conducted when the HI-TRAC water level is within +0/-1 inch of the top of the STC lid and the water level has been independently verified.

9. TRANSFER OPERATIONS shall only be conducted when the combined leak rate through the HI-TRAC top lid and vent port cover confinement seals does not exceed 1×10^{-3} std-cm^3/s.

10. TRANSFER OPERATIONS shall not occur with a TRANSPORTER that contains > 50 gallons of diesel fuel.

(continued)

4.0 DESIGN FEATURES (continued)

Table 4.1.1-1

Fuel Assembly Characteristics

Fuel Assembly Class	15x15[a]
No. of Fuel Rod Locations	204
Fuel Rod Clad O.D. (in)	≥ 0.420
Fuel Rod Clad I.D. (in)	≥ 0.3736
Fuel Pellet Diameter (in)	≤ 0.3671
Fuel Rod Pitch (in)	≤ 0.563
Active Fuel Length (in)	≤ 150
Fuel Assembly Length (in)	≤ 176.8
Fuel Assembly Width (in)	≤ 8.54
No. of Guide and/or Instrument Tubes	21
Guide/Instrument Tube Thickness (mm)	≥ 0.015

(a) All dimensions are design nominal values. Maximum and minimum dimensions are specified to bound variations in design nominal values among fuel assemblies within the 15x15 class.

4.0 DESIGN FEATURES (continued)

Table 4.1.3-1 (page 1 of 2)

List of ASME Code Alternatives for the STC

Component	Reference ASME Code Section/Article	Code Requirement	Alternative, Justification & Compensatory Measures
STC Confinement Boundary	ND-1000	Statement of requirements for Code stamping of components.	Cask confinement boundary is designed, and will be fabricated in accordance with ASME Code, Section III, Subsection ND to the maximum practical extent, but Code stamping is not required.
STC Confinement Boundary	ND-2000	Requires materials to be supplied by ASME-approved material supplier.	Holtec approved suppliers will supply materials with CMTRs per ND-2000.
STC and STC basket assembly	ND-3100 NG-3100	Provides requirements for determining design loading conditions, such as pressure, temperature, and mechanical loads.	These requirements are not applicable. The Licensing Report, serving as the Design Specification, establishes the service conditions and load combinations for fuel transfer.
STC Confinement Boundary	ND-7000	Vessels are required to have overpressure protection.	No overpressure protection is provided. Function of cask vessel is as a radionuclide confinement boundary under normal and hypothetical accident conditions. Cask is designed to withstand maximum internal pressure and maximum accident temperatures.
STC Confinement Boundary	ND-8000	States requirement for name, stamping and reports per NCA-8000	STC to be marked and identified in accordance with the drawing. Code stamping is not required. QA data package prepared in accordance with Holtec's approved QA program.

4.0 DESIGN FEATURES (continued)

Table 4.1.3-1 (page 2 of 2)

List of ASME Code Alternatives for the STC

Component	Reference ASME Code Section/Article	Code Requirement	Alternative, Justification & Compensatory Measures
STC Basket Assembly	NG-4420	NG-4427(a) requires a fillet weld in any single continuous weld may be less that the specified fillet weld dimension by not more than 1/16 inch, provided that the total undersize portion of the weld does not exceed 10 percent of the length of the weld. Individual undersize weld portions shall not exceed 2 inches in length.	Modify the Code requirement (intended for core support structures) with the following text prepared to accord with the geometry and stress analysis imperatives for the fuel basket: For the longitudinal STC basket fillet welds, the following criteria apply: 1) The specified fillet weld throat dimension must be maintained over at least 92 percent of the total weld length. All regions of undersized weld must be less than 3 inches long and separated from each other by at least 9 inches. 2) Areas of undercuts and porosity beyond that allowed by the applicable ASME Code shall not exceed 1/2 inch in weld length. The total length of undercut and porosity over any 1-foot length shall not exceed 2 inches. 3) The total weld length in which items (1) and (2) apply shall not exceed a total of 10 percent of the overall weld length. The limited access of the STC basket panel longitudinal fillet welds makes it difficult to perform effective repairs of these welds and creates the potential for causing additional damage to the basket assembly (e.g., to the neutron absorber and its sheathing) if repairs are attempted. The acceptance criteria provided in the foregoing have been established to comport with the objectives of the basket design and preserve the margins demonstrated in the supporting stress analysis. From the structural standpoint, the weld acceptance criteria are established to ensure that any departure from the ideal, continuous fillet weld seam would not alter the primary bending stresses on which the design of the fuel baskets is predicated. Stated differently, the permitted weld discontinuities are limited in size to ensure that they remain classifiable as local stress elevators ("peak stress", F, in the ASME Code for which specific stress intensity limits do not apply).
STC Basket Assembly	NG-8000	States requirements for nameplates, stamping and reports per NCA-8000.	STC basket to be marked and identified in accordance with the drawing. No Code stamping is required. The STC basket data package is to be in conformance with Holtec's QA program.

5.0 PROGRAMS

The following programs shall be established, implemented and maintained.

5.1 Transport Evaluation Program

a. For lifting of the loaded STC or loaded HI-TRAC using equipment which is integral to a structure governed by 10 CFR Part 50 regulations, 10 CFR 50 requirements apply.

b. This program is not applicable when the loaded HI-TRAC is in the fuel building or is being handled by equipment providing support from underneath (e.g., on air pads).

c. The loaded HI-TRAC may be lifted to any height necessary during TRANSFER OPERATIONS provided the lifting equipment is designed in accordance with items 1, 2, and 3 below.

   1. The metal body and any vertical columns of the lifting equipment shall be designed to comply with stress limits of ASME Section III, Subsection NF, Class 3 for linear structures. All vertical compression loaded primary members shall satisfy the buckling criteria of ASME Section III, Subsection NF.

   2. The horizontal cross beam and any lifting attachments used to connect the load to the lifting equipment shall be designed, fabricated, operated, tested, inspected, and maintained in accordance with applicable sections and guidance of NUREG-0612, Section 5.1. This includes applicable stress limits from ANSI N14.6.

   3. The lifting equipment shall have redundant drop protection features which prevent uncontrolled lowering of the load.

d. The lift height of the loaded HI-TRAC above the transport route surface or other supporting surface shall be limited to 6 inches, except as provided in Specification 5.1.c.3.

5.2 Metamic Coupon Sampling Program

A coupon surveillance program shall be implemented to maintain surveillance of the Metamic neutron absorber material under the radiation, chemical, and thermal environment of the STC.

The surveillance program will be implemented to monitor the performance of Metamic by installing eight bare coupons near the maximum gamma flux elevation (mid height) at four circumferential downcomer areas around the STC fuel basket. At any time during its use the STC must have four of the eight coupons installed.

The following specifications apply:

(i) Coupon size will be nominally 4" x 6". Each coupon will be marked with a unique identification number.

(continued)

5.0 PROGRAMS (continued)

(ii) Pre-characterization testing: Before installation, each coupon will be measured and weighed. The measurements shall be taken at locations pre-specified in the test program. Each coupon shall be tested by neutron attenuation before installation in the STC. The weight, length, width, thickness, and results of the neutron attenuation testing shall be documented and retained.

(iii) Four coupons will be tested at the end of each inter-unit fuel transfer campaign. The coupons shall be measured and weighed and the results compared with the pre-characterization testing data. The results shall be documented and retained.

(iv) The coupons shall be examined for any indication of swelling, delamination, edge degradation, or general corrosion. The results of the examination shall be documented and retained.

(v) The coupons shall be tested by neutron attenuation and the results compared with the pre-characterization testing data. The results of the testing shall be documented and retained. Results are acceptable if the measured value is within +/-2.5% of the value measured for the same coupon at manufacturing.

(vi) The coupons shall be returned to their locations in the STC unless anomalous material behavior is found.

5.3 Technical Specifications (TS) Bases Control Program

This program provides a means for processing changes to the Bases of these Technical Specifications.

a. Changes to the Bases of the TS shall be made under appropriate administrative controls and reviews.

b. Licensees may make changes to Bases without prior NRC approval provided the changes do not involve either of the following:

1. a change in the TS incorporated in the license; or
2. a change to the updated FSAR or Bases that requires NRC approval pursuant to 10 CFR 50.59.

c. The Bases Control Program shall contain provisions to ensure that the Bases are maintained consistent with the FSAR.

d. Proposed changes that do not meet the criteria of Specification 5.5.b above shall be reviewed and approved by the NRC prior to implementation. Changes to the Bases implemented without prior NRC approval shall be provided to the NRC on a frequency consistent with 10 CFR 50.71(e).

ATTACHMENT 8 TO NL-10-093

Indian Point Unit 3
Appendix C to the Operating License
Inter-Unit Fuel Transfer Technical Specifications Bases

Entergy Nuclear Operations, Inc.
Indian Point Unit 3
Docket No. 50-286

B 3.1 INTER-UNIT FUEL TRANSFER

B 3.1.1 Shielded Transfer Canister (STC) Boron Concentration

BASES

BACKGROUND

In the Shielded Transfer Canister (STC) design, the fuel basket is divided rectilinearly into twelve cells as shown in Figure 3.1.2-1, "Shielded Transfer Canister Layout (Top View)". All cells are sized to contain IP3 spent fuel assemblies. All cells are designed and analyzed for fuel of a certain enrichment, burnup, cooling time, and decay heat. The inner cells are designed and analyzed to contain fuel with slightly higher burnup and shorter cooling time. The fuel in the outer cells provides shielding for the fuel in the inner cells.

Prior to placing the fuel in the STC, the fuel assemblies are classified as to the level of reactivity based on the initial enrichment and burnup. This classification is made using Table 3.1.2-1, "Minimum Burnup Requirements at Varying Initial Enrichments". This classification is used to determine if the fuel assembly may be placed in the STC and where it can be placed.

Each configuration is analyzed to demonstrate that k_{eff} is less than or equal to 0.95 with the fuel storage basket loaded with fuel of the highest anticipated reactivity and the STC flooded with water. Under normal conditions, the water in the STC is assumed to be unborated water, while under accident conditions, the soluble boron in the water is credited (Reference 1).

(continued)

BASES

APPLICABLE SAFETY ANALYSES

The water in the STC will contain soluble boron at the same levels of the spent fuel pit, which results in large subcriticality margins under actual operating conditions. The effective neutron multiplication factor (keff) shall be less than 0.95 with the STC fully loaded with fuel of the highest anticipated reactivity and the STC cavity flooded with unborated water at a temperature corresponding to the highest reactivity. Hence, the design of the STC is based on the use of unborated water, which maintains the STC in a subcritical condition during normal operation with the STC fully loaded and in conformance with the fuel storage locations, enrichment and burnup assumed in the analysis and as specified by LCO 3.1.2.

The double contingency principle discussed in ANSI N-16.1-1975 and the April 1978 NRC letter (Reference 2) allows credit for soluble boron under other abnormal or accident conditions because only a single accident need be considered at one time. For example, the accident scenarios include dropping a fuel assembly on top of the STC basket, or accidental misloading of a fuel assembly in the STC basket. These events could increase the potential for criticality in the STC. The criticality accidents can only take place during or as a result of the movement of an assembly. For these accident occurrences, the presence of soluble boron in the spent fuel storage pit prevents criticality in the STC. Reference 1 describes multiple fuel assembly misloads and determined that in the limiting configuration a boron concentration of 998 ppm was required to maintain k_{eff} less than or equal to 0.95.

The applicable safety analysis for boron concentration in the IP2 spent fuel pool is described in Appendix A TS B 3.7.12 "Spent Fuel Pit Boron Concentration". The associated Appendix A TS LCO 3.7.12 requires that the spent fuel pit boron concentration be greater than or equal to 2000 ppm. Similarly, the boron concentration in the IP3 spent fuel pool is described in Appendix A TS B 3.7.15 "Spent Fuel Pit Boron Concentration". The associated Appendix A TS LCO 3.7.15 requires that the spent fuel pit boron concentration be greater than or equal to 1000 ppm. Therefore, in order to preserve the assumptions of the criticality analyses when fuel is in the STC LCO 3.1.1 specifies a minimum boron concentration of 2000 ppm.

The concentration of dissolved boron in the STC satisfies Criterion 2 of 10 CFR 50.36.

(continued)

BASES

LCO

The STC boron concentration is required to be ≥ 2000 ppm. The specified concentration of dissolved boron in the STC preserves the assumptions used in the potential criticality accident scenarios as described in Reference 1. This concentration also preserves the assumptions of the IP2 and IP3 spent fuel pools.

APPLICABILITY

This LCO applies whenever one or more fuel assemblies are in the STC.

ACTIONS

A.1, A.2 and A.3

When the concentration of boron in the STC is less than required, immediate action must be taken to preclude the occurrence of an accident or to mitigate the consequences of an accident in progress. This is most efficiently achieved by immediately suspending the movement of fuel assemblies. The suspension of positive reactivity additions and restoration of boron concentration is performed simultaneously with suspending movement of fuel assemblies. Prior to resuming movement of fuel assemblies, the concentration of boron must be restored. This does not preclude movement of a fuel assembly to a safe position.

SURVEILLANCE REQUIREMENTS

SR 3.1.1.1

This SR is modified by a Note indicating that the surveillance is only required to be performed if the STC is submerged in water or if water is to be added to, or recirculated through, the STC. These are the only times when a change in STC boron concentration could potentially occur. In order to preserve the assumptions of the criticality analysis, the Note further requires that water added to, or recirculated through, the STC must meet the boron concentration requirements of LCO 3.1.1. This Note does not apply to the addition of steam to the STC (Reference 1)

This SR verifies that the concentration of boron in the STC is within the required limit. As long as this SR is met, the analyzed accidents are fully addressed. The initial surveillance within 4 hours prior to loading fuel into the STC and the 48 hour Frequency thereafter are appropriate because no major replenishment of spent fuel pit water is expected to take place over such a short period of time and any recirculation of water or water added to the STC will be accomplished using borated water at or above the required limit.

(continued)

BASES

SURVEILLANCE REQUIREMENTS (continued)	Whenever the STC is in the spent fuel pool a measurement of spent fuel pool boron concentration is equivalent to an STC boron concentration measurement.

REFERENCES

1. Holtec Report HI-2094289, Licensing Report on the Inter-Unit Transfer of Spent Nuclear Fuel at Indian Point Energy Center, Revision 3.

2. Double contingency principle of ANSI N16.1-1975, as specified in the April 14, 1978 NRC letter (Section 1.2) and implied in the proposed revision to Regulatory Guide 1.13 (Section 1.4, Appendix A).

B 3.1 INTER-UNIT FUEL TRANSFER

B 3.1.2 Shielded Transfer Canister (STC) Loading

BASES

BACKGROUND

As required by plant operations IP3 spent fuel is transferred to the IP2 spent fuel pit in order to maintain adequate fuel storage capacity in the IP3 spent fuel pit. IP3 spent fuel moved to the IP2 spent fuel pit is subsequently transferred to dry cask storage at the IPEC on-site Independent Spent Fuel Storage Installation (ISFSI) as part of spent fuel inventory management in the IP2 spent fuel pit. This inter-unit transfer is necessary because the cask handling crane at IP3 does not have high enough load-bearing capacity to lift and handle the dry storage transfer cask and canister.

Inter-unit fuel transfer operations are conducted using the Shielded Transfer Canister (STC) and the HI-TRAC 100D transfer cask. The STC is a bolted-lid pressure vessel with an internal fuel basket that accommodates up to twelve IP3 spent fuel assemblies. The STC is loaded in the IP3 spent fuel pit, placed into the HI-TRAC transfer cask in the Fuel Storage Building (FSB) truck bay, and moved outside the truck bay on air pads or other approved conveyance. The STC/HI-TRAC assemblage is transported from outside the IP3 FSB truck bay to just outside the IP2 FSB truck bay with a vertical cask transporter (VCT) and moved into the IP2 FSB truck bay on a low profile transporter.

The STC is removed from the HI-TRAC using the cask handling crane and placed into the IP2 spent fuel pit. The STC lid is removed and the IP3 fuel assemblies are moved to their designated IP2 wet storage rack cell locations with the spent fuel bridge crane.

Fuel assemblies to be transferred are chosen at IP3 based on the requirements for loading in the STC. The STC fuel loading requirements are such that the fuel chosen for transfer to IP2 is suitable for storage in the IP2 spent fuel pits storage racks and there are open fuel cells available. Fuel move sheets will govern the transfer of the spent fuel from IP3 to IP2.

In the STC design, the fuel basket is divided rectilinearly into twelve cells as shown in Figure 3.1.2-1, "Shielded Transfer Canister Layout (Top View)". All cells are sized to contain IP3 spent fuel assemblies. All cells are designed and

(continued)

BASES

BACKGROUND (continued)

analyzed for fuel of a certain enrichment, burnup, cooling time, and decay heat. The inner cells are designed and analyzed to contain fuel with slightly higher burnup and shorter cooling time. The fuel in the outer cells provides shielding for the fuel in the inner cells.

Prior to placing the fuel in the STC, the fuel assemblies are classified as to the level of reactivity based on the initial enrichment and burnup. This classification is made using Table 3.1.2-1, "Minimum Burnup Requirements at Varying Initial Enrichments". This classification is used to determine if the fuel assembly may be placed in the STC and where it can be placed.

Table 3.1.2-1 is used to classify each assembly into one of the following categories based on initial U-235 enrichment and average assembly burnup:

Type 2 assemblies are relatively less reactive assemblies and include any assembly that meets the minimum assembly average burnup at a given initial enrichment of Table 3.1.2-1. Type 2 assemblies may be stored in any cell in the STC.

Additional constraints on Type 2 fuel are:

1) Post-irradiation cooling time ≥ 5 years
2) Average burnup per assembly ≤ 55,000 MWD/MTU
3) Decay heat including non fuel hardware ≤ 650 Watts may be placed in any STC cell
4) Decay heat including non fuel hardware ≤ 1105 Watts may only be placed in inner cells (1, 2, 3, or 4).
5) Post-irradiation cooling time and the maximum average burnup of non fuel hardware shall be within the cell locations and limits specified in Table 3.1.2-2.

Type 1 assemblies are relatively more reactive assemblies and include any assembly that does not meet the minimum assembly average burnup at a given initial enrichment of Table 3.1.2-1. Type 1 fuel <u>must</u> be placed in the outer cells (5, 6, 7, 8, 9, 10, 11, or 12) of the STC to preserve the assumptions of the design basis criticality analysis.

Additional constraints on Type 1 fuel are:

1) Post-irradiation cooling time ≥ 5 years
2) Average burnup per assembly ≤ 55,000 MWD/MTU
3) Decay heat including non fuel hardware ≤ 650 Watts

(continued)

BASES

BACKGROUND (continued)

Together, the limits on Type 1 and Type 2 ensure the criticality, shielding, and thermal analyses remain bounding.

Fuel assemblies with an initial enrichment > 5.0 wt% U-235 are not shown on Table 3.1.2-1 and cannot be placed in the STC in accordance with TS 3.1.2.

APPLICABLE SAFETY ANALYSES

The STC has been analyzed for criticality prevention, heat rejection capability, shielding, and structural integrity to ensure safe transfer operations from the time that the STC is loaded at IP3 to the time it is unloaded at IP2 (Reference 1).

The criticality analysis and the limits on fuel selection prescribed in LCO 3.1.2 ensure that the effective neutron multiplication factor (k_{eff}) of a loaded STC in its most reactive configuration remains less than 0.95.

The water in the STC will contain soluble boron at the same levels of the spent fuel pit, which results in large subcriticality margins under actual operating conditions. The effective neutron multiplication factor (keff) shall be less than 0.95 with the STC fully loaded with fuel of the highest anticipated reactivity and the STC cavity flooded with unborated water at a temperature corresponding to the highest reactivity. Hence, the design of the STC is based on the use of unborated water, which maintains the STC in a subcritical condition during normal operation with the STC fully loaded and in conformance with the fuel storage locations, enrichment and burnup assumed in the analysis and as specified by this LCO (Reference 1).

The double contingency principle discussed in ANSI N-16.1-1975 and the April 1978 NRC letter (Reference 2) allows credit for soluble boron under other abnormal or accident conditions because only a single accident need be considered at one time. For example, the accident scenarios include dropping a fuel assembly on top of the STC basket, or accidental misloading of a fuel assembly in the STC basket. These events could increase the potential for criticality in the STC.

(continued)

BASES

APPLICABLE SAFETY ANALYSES (continued)

To mitigate these postulated criticality related accidents, boron concentration is verified to be within the limits specified in LCO 3.1.1, "STC Boron Concentration".

The thermal analysis shows that the fuel cladding temperature remains below the acceptance criteria of 752°F and 1058°F, for normal and accident conditions respectively, at all times during inter-unit transfer and that the design pressure and temperature of the STC are not exceeded.

The structural analysis shows that the STC and HI-TRAC maintain their structural integrity under all normal, off-normal, and credible accident conditions. There are no radioactive material releases from the STC or HI-TRAC during any condition of operation.

The shielding analysis shows that the dose rates from the STC during the short time it is not inside the HI-TRAC are manageable with appropriate radiation protection controls. Dose rates from the loaded HI-TRAC are shown to be low.

The configuration of fuel assemblies in the STC satisfies Criterion 2 of CFR 50.36.

LCO

Fuel assemblies stored in the spent fuel pit are classified in accordance with Table 3.1.2-1 based on initial enrichment and burnup which is indicative of fuel assembly reactivity. Based on this classification, fuel assembly placement in the STC cells is restricted in accordance with the classification of the fuel and the additional constraints established by this LCO.

LCO 3.1.2.b is modified by a note stating that if one or more Type 1 assemblies are in the STC, cells 1, 2, 3, and 4 must be empty. The restriction preserves the assumptions of the bounding criticality analysis for Type 1 fuel assemblies placed only in the peripheral fuel cells.

APPLICABILITY

This LCO applies whenever one or more fuel assemblies are in the STC.

(continued)

BASES

ACTIONS

A.1

When the configuration of fuel assemblies in the STC is not in accordance with this LCO, one action is to make the necessary fuel assembly movement(s) to bring the configuration of the fuel in the STC into compliance with this LCO. This action restores the STC to an analyzed configuration.

OR

A.2

When the configuration of fuel assemblies in the STC is not in accordance with this LCO, an optional action to restore compliance with the LCO is to move the fuel assembly or assemblies from the STC back into the IP3 spent fuel pool in accordance with Appendix A Technical Specification LCO 3.7.16.

Either action places the fuel in equally safe locations.

The completion time of "Immediately" is appropriate because fuel located in the STC may be in an unanalyzed condition and action is required to be initiated and completed without delay to restore the fuel location to an analyzed configuration.

SURVEILLANCE REQUIREMENTS

SR 3.1.2.1

This SR verifies by administrative means that the fuel assembly meets the requirements of the STC location in which it is to be placed in accordance with the accompanying LCO. This SR ensures the LCO limits for fuel selection and location in the STC are met and the supporting technical analyses remain bounding for all inter-unit transfer operations.

REFERENCES

1. Holtec Report HI-2094289, Licensing Report on the Inter-Unit Transfer of Spent Nuclear Fuel at Indian Point Energy Center, Revision 3.

2. Double contingency principle of ANSI N16.1-1975, as specified in the April 14, 1978 NRC letter (Section 1.2) and implied in the proposed revision to Regulatory Guide 1.13 (Section 1.4, Appendix A).

B 3.1 INTER-UNIT FUEL TRANSFER

B 3.1.3 Shielded Transfer Canister (STC) Pressure Rise

BASES

BACKGROUND

Inter-unit fuel transfer operations are conducted using the Shielded Transfer Canister (STC) and the HI-TRAC 100D transfer cask. The STC is a bolted-lid pressure vessel with an internal fuel basket that accommodates up to twelve IP3 spent fuel assemblies. The STC is loaded in the IP3 spent fuel pit, placed into the HI-TRAC transfer cask in the Fuel Storage Building (FSB) truck bay, and moved outside the truck bay on air pads or other approved conveyance. The STC/HI-TRAC assemblage is transported from outside the IP3 FSB truck bay to just outside the IP2 FSB truck bay with a vertical cask transporter (VCT) and moved into the IP2 FSB truck bay on a low profile transporter.

The STC is removed from the HI-TRAC using the cask handling crane and placed into the IP2 spent fuel pit. The STC lid is removed and the IP3 fuel assemblies are moved to their designated IP2 wet storage rack cell locations with the spent fuel bridge crane.

Loading of fuel assemblies into the STC is controlled by LCO 3.1.2, "STC Unloading". This LCO ensures that fuel assemblies selected for placement in the STC meet design basis requirements. To provide an additional layer of assurance that the thermal payload of the STC is within design limits a fuel misload detection surveillance based on STC pressure rise is conducted prior to transfer operations. The surveillance is conducted with the loaded and sealed STC placed within the HI-TRAC inside the IP3 fuel handling building. The misload surveillance requires the pressure inside the STC to be monitored for a 24 hour duration after the STC is sealed and the open space above the STC water level is filled with steam.

APPLICABLE SAFETY ANALYSES

The accidental misloading of a high decay heat fuel assembly or the misloading of multiple assemblies would be detected based on a comparison of predicted and as measured STC pressure rise. Thermal analyses have been performed (Reference 1) that predict an STC pressure rise of no more than 4.2 psi after an STC loaded with the design basis heat load is placed in the HI-TRAC and the STC is sealed.

The STC pressure rise limit satisfies Criterion 2 of 10 CFR 50.36.

(continued)

BASES

LCO

As indicated in the Applicable Safety Analyses, the STC pressure rise is required to be ≤ 4.2 psi prior to TRANSFER OPERATIONS when the STC is in the HI-TRAC and the STC lid has been installed and the STC water level established as measured over a 24 hour period.

Monitoring the STC pressure rise ensures that should the pressure rise limit be exceeded, appropriate actions are taken in a timely manner to return the STC to the IP3 spent fuel pool.

This LCO preserves the assumptions of the safety analyses for the STC and the IP2 spent fuel pit.

APPLICABILITY

Prior to TRANSFER OPERATIONS when the STC is in the HI-TRAC and the STC lid has been installed and the STC water level established.

ACTIONS

A.1

The completion time of "Immediately" is appropriate because fuel located in the STC may be in an unanalyzed condition and action is required to be initiated and completed without delay to prevent overpressurization of the STC.

A.2.1

The completion time of 12 hours is appropriate because fuel located in the STC may be in an unanalyzed condition and action is required to be initiated and completed to restore fuel location to an analyzed configuration. This timeframe considers the time required to complete this action and that a vent path has been established.

A.2.2

Required Action A.2.2 is modified by a Note indicating that the water used for recirculation must meet the boron concentration requirement of LCO 3.1.1. This requirement preserves the assumptions of the criticality analysis.

The completion time of "Immediately" is appropriate because fuel located in the STC may be in an unanalyzed condition and action is required to be initiated without delay to prevent overpressurization of the STC.

(continued)

BASES

SURVEILLANCE REQUIREMENTS

SR 3.1.3.1

This SR verifies by direct measurement that the STC cavity pressure is within limit. As long as this SR is met, the analyzed accident is fully addressed.

REFERENCES

1. Holtec Report HI-2094289, Licensing Report on the Inter-Unit Transfer of Spent Nuclear Fuel at Indian Point Energy Center, Revision 3.

B 3.1 INTER-UNIT FUEL TRANSFER

B 3.1.4 Shielded Transfer Canister (STC) Unloading

BASES

BACKGROUND

As required by plant operations IP3 spent fuel is transferred to the IP2 spent fuel pit in order to maintain adequate fuel storage capacity in the IP3 spent fuel pit. IP3 spent fuel moved to the IP2 spent fuel pit is subsequently transferred to dry cask storage at the IPEC on-site Independent Spent Fuel Storage Installation (ISFSI) as part of spent fuel inventory management in the IP2 spent fuel pit. This inter-unit transfer is necessary because the cask handling crane at IP3 does not have high enough load-bearing capacity to lift and handle the dry storage transfer cask and canister.

Inter-unit fuel transfer operations are conducted using the Shielded Transfer Canister (STC) and the HI-TRAC 100D transfer cask. The STC is a bolted-lid pressure vessel with an internal fuel basket that accommodates up to twelve IP3 spent fuel assemblies. The STC is loaded in the IP3 spent fuel pit, placed into the HI-TRAC transfer cask in the Fuel Storage Building (FSB) truck bay, and moved outside the truck bay on air pads or other approved conveyance. The STC/HI-TRAC assemblage is transported from outside the IP3 FSB truck bay to just outside the IP2 FSB truck bay with a vertical cask transporter (VCT) and moved into the IP2 FSB truck bay on a low profile transporter.

The STC is removed from the HI-TRAC using the cask handling crane and placed into the IP2 spent fuel pit. The STC lid is removed and the IP3 fuel assemblies are moved to their designated IP2 wet storage rack cell locations with the spent fuel bridge crane.

Fuel assemblies to be transferred are chosen at IP3 based on the requirements for loading in the STC as specified in LCO 3.1.2. The STC fuel loading requirements are such that the fuel chosen for transfer to IP2 is suitable for storage in the IP2 spent fuel pits storage racks and there are open fuel cells available. Fuel move sheets will govern the transfer of the spent fuel from IP3 to IP2.

(continued)

BASES

APPLICABLE SAFETY ANALYSES

The STC has been analyzed for criticality prevention, heat rejection capability, shielding, and structural integrity to ensure safe transfer operations from the time that the STC is loaded at IP3 to the time it is unloaded at IP2 (Reference 1).

The criticality analysis and the limits on fuel selection prescribed in LCO 3.1.2 ensure that the effective neutron multiplication factor (k_{eff}) of a loaded STC in its most reactive configuration remains less than 0.95.

The water in the STC will contain soluble boron at the same levels of the spent fuel pit, which results in large subcriticality margins under actual operating conditions. The effective neutron multiplication factor (keff) shall be less than 0.95 with the STC fully loaded with fuel of the highest anticipated reactivity and the STC cavity flooded with unborated water at a temperature corresponding to the highest reactivity. Hence, the design of the STC is based on the use of unborated water, which maintains the STC in a subcritical condition during normal operation with the STC fully loaded and in conformance with the fuel storage locations, enrichment and burnup assumed in the analysis and as specified by this LCO (Reference 1).

The double contingency principle discussed in ANSI N-16.1-1975 and the April 1978 NRC letter (Reference 2) allows credit for soluble boron under other abnormal or accident conditions because only a single accident need be considered at one time. For example, the accident scenarios include dropping a fuel assembly on top of the STC basket, or accidental misloading of a fuel assembly in the STC basket. These events could increase the potential for criticality in the STC.

To mitigate these postulated criticality related accidents, boron concentration is verified to be within the limits specified in LCO 3.1.1, "STC Boron Concentration".

The thermal analysis shows that the fuel cladding temperature remains below the acceptance criteria of 752°F and 1058°F, for normal and accident conditions respectively, at all times during inter-unit transfer and that the design pressure and temperature of the STC are not exceeded.

The structural analysis shows that the STC and HI-TRAC maintain their structural integrity under all normal, off-normal, and credible accident conditions. There are no radioactive material releases from the STC or HI-TRAC during any condition of operation.

(continued)

BASES

APPLICABLE SAFETY ANALYSIS (continued)

The shielding analysis shows that the dose rates from the STC during the short time it is not inside the HI-TRAC are manageable with appropriate radiation protection controls. Dose rates from the loaded HI-TRAC are shown to be low.

The configuration of fuel assemblies in the STC satisfies Criterion 2 of CFR 50.36.

LCO

LCO 3.1.4 governs the presence of the STC in the IP2 spent fuel pit. The STC arrives at IP2 with its bolted lid in place, which preserves the fuel types and fuel locations established at IP3 when the STC was loaded. Once the STC lid is removed at IP2, this LCO requires that a transferred fuel assembly be in one of three places:

1. In an approved IP2 spent fuel pit storage rack location per Appendix A TS LCO 3.7.13, or
2. In an authorized STC fuel basket cell, or
3. In transit between these two locations

This LCO preserves the assumptions of the safety analyses for the STC and the IP2 spent fuel pit.

This LCO is modified by three notes. Note 1 specifies that only IP3 spent fuel assemblies are permitted to be in the STC. The STC design and analysis is based on IP3 fuel assemblies. Loading of IP2 fuel assemblies in the STC is not authorized. Note 2 specifies that once each IP3 spent fuel assembly is removed from the STC and placed in an IP2 spent fuel pit storage rack location and released from the spent fuel bridge crane, it may not be returned to the STC. This note prevents loading IP3 fuel out of the IP2 spent fuel pit for transfer back to the STC or the IP3 spent fuel pit. This is not an authorized evolution. Note 3 specifies that for fuel assemblies exposed to Hafnium inserts during irradiation the burnup of the assembly shall be the burnup prior to the exposure to the Hafnium insert. Hafnium inserts for flux suppression were only used in IP3. Those inserts were only used in a limited number of assemblies at the periphery of the core. Further, they were only used for a burnup of up to about 6 GWd/MTU in each assembly. To account for the effect of those hafnium inserts in a conservative manner, the burnup of the assemblies that were exposed to them should be reduced by the exposure with hafnium inserts before comparing the value to any burnup requirements for the IP2 pool.

(continued)

BASES

LCO (continued)

For example, and assembly with 40 GWD/MTU that had a hafnium insert for 5 GWD/MTU should be considered a 35 GWD/MTU for the purpose of placing it into the IP2 pool (Ref. 1).

APPLICABILITY

The LCO is applicable whenever the STC is in the IP2 spent fuel pit.

ACTIONS

A.1

When any IP3 spent fuel assembly transferred to the IP2 spent fuel pit is not in one of the three authorized locations, LCO 3.1.4 is not met. Required Action A.1 specifies that action begin immediately to restore compliance with the LCO. The affected fuel assemblies must be placed in an authorized location without delay.

The completion time of "Immediately" is appropriate because fuel located in the STC or the spent fuel pit racks may be in an unanalyzed condition and action is required to be initiated and completed without delay to restore fuel location to an analyzed configuration.

SURVEILLANCE REQUIREMENTS

SR 3.1.4.1

SR 3.1.4.1 requires that any IP3 fuel assembly being returned to the STC be verified by administrative means to have been returned to the same STC fuel cell location from which it was removed. This SR ensures that the loading pattern authorized when the STC was loaded at IP3 is preserved.

This SR does not require the same verification for placing the fuel assembly in a spent fuel pit cell location because that process is governed by a separate Appendix A TS LCO 3.7.13 and a fuel move sheet is required to place the fuel assembly in any location in the storage racks.

REFERENCES

1. Holtec Report HI-2094289, Licensing Report on the Inter-Unit Transfer of Spent Nuclear Fuel at Indian Point Energy Center, Revision 3.

ATTACHMENT 9 TO NL-10-093

No Significant Hazards Consideration for Indian Point Unit 2 Pertaining to Inter-Unit Fuel Transfer

Entergy Nuclear Operations, Inc.
Indian Point Unit 2
Docket No. 50-247

Entergy has evaluated whether or not a significant hazards consideration is involved with the proposed amendment for IP2 by focusing on the three standards set forth in 10 CFR 50.92, "Issuance of Amendment," as discussed below:

1. Does the proposed amendment involve a significant increase in the probability or consequences of an accident previously evaluated?

Response: No.

The proposed amendment proposes to modify Operating License (OL) Conditions 2.B.(5) and 2.C.(2), and to add a new OL Condition 2.P that together allow the transfer to and possession of IP3 fuel in the IP2 spent fuel pit subject to the conditions listed in a new Appendix C to the Operating License. The new Appendix C *Inter-Unit Fuel Transfer Technical Specifications* is common to both IP2 and IP3 and controls inter-unit fuel transfer operations via LCOs, Design Features, and Programs as follows:

LCO 3.1.1 *Shielded Transfer Canister (STC) Boron Concentration*
LCO 3.1.2 *Shielded Transfer Canister (STC) Loading*
LCO 3.1.3 *Shielded Transfer Canister (STC) Pressure Rise*
LCO 3.1.4 *Shielded Transfer Canister (STC) Unloading*

Design Feature 4.1 *Inter-Unit Fuel Transfer*

Program 5.1 *Transport Evaluation Program*
Program 5.2 *Metamic Coupon Sampling Program*
Program 5.3 *Technical Specifications Bases Control Program*

The proposed amendment adds Appendix C LCO 3.1.1 *Shielded Transfer Canister (STC) Boron Concentration*. The purpose of the LCO and associated Action and Surveillance Requirement is to place controls on the STC boron concentration whenever fuel is in the STC to ensure compliance with the accident analysis assumptions during loading, transfer, and unloading operations.

The proposed amendment adds Appendix C LCO 3.1.2 *Shielded Transfer Canister (STC) Loading*. The purpose of the LCO and associated Action and Surveillance Requirement is to place controls on the loading of the STC within the IP3 spent fuel pit to ensure compliance with accident analysis assumptions and to take immediate action to restore compliance should the LCO not be met. The proposed amendment also adds a new Appendix C Design Feature 4.1.2 *Criticality* that ensures the design of the STC is in compliance with the criticality analysis, prevents inadvertent drainage of the STC, and restricts the maximum capacity of the STC to 12 fuel assemblies. In addition, a new Appendix C Program 5.2 Metamic Coupon Sampling Program is proposed to ensure that the characteristics of Metamic assumed in the criticality analysis are preserved.

The proposed amendment adds Appendix C LCO 3.1.3 *Shielded Transfer Canister (STC) Pressure Rise*. The purpose of the LCO and associated Action and Surveillance Requirement is to detect an accidental misloading of a high decay heat fuel assembly within the IP3 fuel handling building and to take appropriate actions prior to transfer operations.

The proposed amendment adds Appendix C LCO 3.1.4 *Shielded Transfer Canister (STC) Unloading*. The purpose of the LCO and associated Action and Surveillance Requirement is to place controls on the unloading of the STC within the IP2 spent fuel pit to ensure compliance with accident analysis assumptions and to take immediate action to restore compliance should the LCO not be met. The proposed amendment also adds a new Appendix C Design Feature 4.1.2 *Criticality* that ensures the design of the STC is in compliance with the criticality analysis, prevents inadvertent drainage of the STC, and restricts the maximum capacity of the STC to 12 fuel assemblies. In addition, a new Appendix C Program 5.2 Appendix C Metamic Coupon Sampling Program is proposed to ensure that the characteristics of Metamic assumed in the criticality analysis are preserved.

The previously evaluated accidents that must be considered are a criticality accident, a boron dilution accident in the spent fuel pit, a fuel handling accident (FHA), a loss of spent fuel pit cooling and natural events.

Criticality Accidents

The probability of a criticality accident at IP2 is not increased because proposed Appendix C LCO 3.1.4 *Shielded Transfer Canister (STC) Unloading* requires that the IP3 spent fuel assemblies transferred to IP2 via the STC must be either in an approved IP2 spent fuel pit storage rack location per existing Appendix A LCO 3.7.13 *Spent Fuel Pit Storage*, in their authorized STC fuel basket cell, or be in transit between these two locations. Administrative controls will be established to assure fuel movement under the requirements of this LCO are in compliance with the criticality analyses described in this amendment request, and, therefore, these fuel movements do not increase the probability of a criticality accident. The probability for a criticality event due to neutronic coupling, while the STC is in the spent fuel pit, is negligible because of the STC steel and lead vessel walls and the minimum distance between the STC and the nearest spent fuel rack will be maintained by procedure. In addition from a criticality perspective the IP3 fuel assembly design is essentially the same as the IP2 fuel design.

The consequences of a criticality accident within the spent fuel pit are not changed because the fuel assemblies are spaced in a pattern within the STC and pit that continue to preserve criticality accident analyses assumptions.

Boron Dilution Accident

The probability of a boron dilution event remains the same because the proposed change does not alter the manner in which the IP2 spent fuel cooling system or any other plant system is operated, or otherwise increase the likelihood of adding significant quantities of unborated water into the spent fuel pit. In addition, the STC is loaded in the IP3 spent fuel pit, where the boron concentration in the STC is controlled by the new Appendix C LCO 3.1.1 *STC Boron Concentration* that imposes a minimum boron concentration limit of 2000 ppm. The boron concentration in the IP2 spent fuel pit is also controlled to a minimum of 2000 ppm by existing Appendix A LCO 3.7.12 *Spent Fuel Pit Boron Concentration.*

The consequences of the boron dilution event remains as described in the IP2 UFSAR because the minimum concentration of soluble boron in the spent fuel pit required by the IP2 Appendix A Technical Specifications remains the same (2,000 ppm). The reactivity of the STC filled with the most reactive combination of approved fuel assemblies in unborated water results in a k_{eff} less

than 0.95. Thus, even in the unlikely event of a complete dilution of the spent fuel pit water, the STC will remain safely subcritical.

Fuel Handling Accident

The probability of an FHA which includes a fuel assembly drop accident and a fuel cask drop accident remains very remote because of the many administrative controls and physical limitations imposed on fuel-handling operations. The probability of an FHA will not increase significantly due to the proposed changes because the individual fuel assemblies will be moved from the STC to the spent fuel pit racks in the same manner, using the same equipment, procedures, and other administrative controls (i.e. fuel move sheets) that are currently used. The fuel basket design in the STC emulates that of a spent fuel rack, making the individual fuel assembly movement operation the same as in current practice.

The consequences of the existing fuel handling accident remain bounding because the IP3 fuel assembly design is essentially the same as the IP2 design and the IP3 fuel assemblies to be transferred to IP2 will be cooled a minimum of 5 years. This compares with a cooling time of 84 hours used in the existing FHA radiological analysis. The 5-year cooling time results in a significant reduction in the radioactive source term available for release from a damaged fuel assembly compared to the source term considered in the design basis FHA radiological analysis. The consequences of the previously analyzed fuel assembly drop accident, therefore, continue to provide a bounding estimated offsite dose for this accident. In addition, the consequences of a dropped fuel assembly on the STC has been evaluated from a criticality perspective and it has been determined that the fuel storage array remains subcritical.

The probability of an STC drop in the truck bay, during transit to the spent fuel pit, or into the spent fuel pit is highly improbable because of the many administrative controls and physical limitations imposed on cask-handling operations and will not increase significantly due to the proposed changes because the cask will be moved into, and removed from, the spent fuel pit using the existing single failure proof lifting system and procedures similar to those already in use for dry cask storage activities. The lifting system includes the IP2 cask handling crane, special lifting devices, and interfacing lift points on the STC and HI-TRAC. The vertical drop of a HI-TRAC 100D containing a STC is considered sufficiently unlikely as not to increase the overall probability of a FHA due to the short period of time when suspended from the VCT after the redundant drop protection design features are removed. In addition, the VCT lifting equipment is designed in accordance with the requirements of Appendix C Program 5.1 *Transport Evaluation Program.*

The consequences of the existing fuel cask drop accident inside the FSB as described in the UFSAR remain bounding because the STC and HI-TRAC will only be lifted using a single failure proof lifting system inside the FSB, as described above. A drop of the HI-TRAC containing a fuel-loaded STC while suspended from the VCT was analyzed for the short period of time outdoors when the VCT does not have its redundant drop protection design features installed. The physical design of the STC and HI-TRAC 100D effectively precludes significant effluent releases as demonstrated by analysis of the HI-TRAC 100D vertical drop accident that demonstrates that the drop event would not result in any unacceptable consequence for the transfer cask and its contents.

Loss of Spent Fuel Pool Cooling

The probability of a loss of spent fuel pit cooling remains the same because the proposed change does not alter the manner in which the IP2 spent fuel cooling loop is operated, designed or maintained.
The consequences of a loss of spent fuel pit cooling remains the same because the thermal design basis for the spent fuel pit cooling loop provides for all fuel pit rack locations to be filled at the end of a full core discharge and therefore the design basis heat load effectively includes any heat load associated with the assemblies within the STC.

Natural Events

The consequences of a seismic event with an STC in the spent fuel pit, with the STC loaded into the HI-TRAC 100D, and with the HI-TRAC loaded into the vertical cask transporter have been evaluated and it has been determined that these components will not tip over during a design basis earthquake.

The consequences of extreme environmental events such as high winds, tornado, and tornado –borne missiles have also been considered and in fact are part of the certification of HI-TRAC 100D in Docket No. 72-1014, where it is shown that the fuel is protected. In addition, should the water jacket of the HI-TRAC 100D be penetrated by a missile and all jacket water lost, analyses have demonstrated that no design limits would be exceeded. Therefore, there are no significant dose consequences associated with these events. A lightning strike could ignite the fuel in the vertical cask transporter resulting in engulfment of the HI-TRAC 100D, however, analyses have demonstrated that no design limits are exceeded. Therefore, there are no significant dose consequences associated with this event. The design basis flood event results in a water level below the elevation of the heavy haul path, therefore, there are no significant dose consequences associated with this event.

The breakdown of a loaded vertical cask transporter leaving HI-TRAC 100D exposed to potential high ambient temperatures for a prolonged period of time has been analyzed with all design criteria satisfied. Therefore, there are no significant dose consequences associated with these events.

Therefore, the proposed change does not involve a significant increase in the probability or consequences of an accident previously evaluated.

2. Does the proposed amendment create the possibility of a new or different kind of accident from any accident previously evaluated?

Response: No.

The IP2 spent fuel pit is designed to accommodate fuel having certain characteristics as well as an overall heat load that is commensurate with the capability of the spent fuel pit cooling system's ability to remove the decay heat. The IP3 fuel assemblies selected for storage in the IP2 spent fuel pit are required to meet the existing IP2 Appendix A LCO 3.7.13 *Spent Fuel Pit Storage* limits for storage. The fuel basket design in the STC emulates that of a spent fuel rack, making the individual fuel assembly movement operation the same as in current practice using appropriate procedural controls to ensure each fuel assembly is moved safely and into the correct fuel cell location in the racks as specified on the fuel move sheet . There are no changes

proposed to the spent fuel pit storage racks or the manner in which spent fuel is moved from the reactor to the spent fuel pit. All limits for spent fuel storage in the IP2 spent fuel pit will remain the same and will continue to be complied with, including consideration of the additional IP3 fuel assemblies. The vertical drop of a HI-TRAC 100D containing a STC when suspended from the VCT after the redundant drop protection design features are removed has been evaluated and is bounded by the existing FHA. Thus, the existing fuel handling accident bounds the STC unloading operation and a HI-TRAC vertical drop and, therefore, no new or different fuel handling accident is created.

The proposed amendment does not alter the operation of any plant cooling systems nor does it create a new source of unborated water that could be injected into the spent fuel pit or affect the ability of systems to mitigate a boron dilution event. The STC has been designed and its contents so limited that even if fully de-borated, the content would not reach criticality, with k_{eff} remaining less than 0.95. Appendix C LCO 3.1.1 *Shielded Transfer Canister (STC) Boron Concentration* ensure the boron concentration of the water in the STC meets the boron concentration requirements of the IP2 spent fuel pit.

The collapse of the roadway during transport resulting in cask rollover and potential loss of water inventory and potential large radioactive release is not a credible accident because of the structural stability of the VCT and the measures taken to ensure that the haul path is structurally sound. These measures include an evaluation of the haul path that includes ground penetrating radar and/or soil compaction studies. In addition, a non-mechanistic tipover analysis of the loaded HI-TRAC transfer cask demonstrates that there is no degradation in the margin of safety engineered in the STC and the HI-TRAC. In addition, as a defense in depth measure, the non-mechanistic tipover of a loaded STC within the HI-TRAC during transfer operations has been evaluated. The analyses demonstrate structural integrity, radiological confinement, sufficient shielding, fuel integrity and sufficient thermal performance.

The inadvertent loading and subsequent transport of a high decay heat assembly in the STC is precluded by robust fuel handling procedures and safety features. In addition a new Appendix C LCO 3.1.3 *Shielded Transfer Canister (STC) Pressure Rise* and associated actions and surveillance would detect an accidental misloading of a high decay heat fuel assembly within the IP3 fuel handling building and to take appropriate actions prior to transfer operations.

Therefore, the proposed change does not create the possibility of a new or different kind of accident from any previously evaluated.

3. Does the proposed amendment involve a significant reduction in a margin of safety?

Response: No.

The proposed amendment ensures that the IP3 spent fuel to be transferred to the IP2 spent fuel pit racks will meet all existing requirements for fuel storage at IP2. The storage racks and the spent fuel pit cooling system meet the design requirements for the IP3 fuel from a criticality, thermal, shielding, and material perspective because the fuel designs and operating parameters are very similar. The proposed STC loading TS 3.1.2 *Shielded Transfer Canister (STC) Loading* and the associated fuel selection procedures used to control the loading of the STC at IP3 will ensure that all fuel to be transferred meets IP2 requirements for storage in the IP2 spent fuel pit racks.

The presence of the STC in the IP2 spent fuel pit has been analyzed and found to be acceptable. The spent fuel pit was originally designed to accommodate a spent fuel shipping cask and the STC is similar in physical dimensions to a shipping cask. Administrative controls will be in place during STC handling operations to ensure that the spent fuel pit water level is maintained within limits. Any criticality event caused by neutronic coupling between the STC and the fuel in the spent fuel racks is precluded due to the thick steel and lead walls of the STC and the distance between the STC and the nearest spent fuel in the racks.

The proposed amendment does not involve changes to any plant operating systems used to cool the spent fuel pit water or respond to unanticipated events or accidents.

Therefore, the proposed change does not involve a significant reduction in a margin of safety.

Based on the above, Entergy concludes that the proposed amendment to the IP2 Operating License and Technical Specifications presents no significant hazards consideration under the standards set forth in 10 CFR 50.92(c), and, accordingly, a finding of "no significant hazards consideration" is justified.

ATTACHMENT 10 TO NL-10-093

No Significant Hazards Consideration for Indian Point Unit 3 Pertaining to Inter-Unit Fuel Transfer

Entergy Nuclear Operations, Inc.
Indian Point Unit 3
Docket No. 50-286

Entergy has evaluated whether or not a significant hazards consideration is involved with the proposed amendment for IP3 by focusing on the three standards set forth in 10 CFR 50.92, "Issuance of Amendment," as discussed below:

1. Does the proposed amendment involve a significant increase in the probability or consequences of an accident previously evaluated?

Response: No.

The proposed amendment proposes to modify Operating License (OL) Condition 2.C.(2), and to add a new OL Condition 2.AE that together allow the transfer of IP3 fuel to the IP2 spent fuel pit subject to the conditions listed in a new Appendix C to the Operating License. The new Appendix C *Inter-Unit Fuel Transfer Technical Specificati*ons is common to both IP2 and IP3 and controls inter-unit fuel transfer operations via LCOs, Design Features, and Programs as follows:

LCO 3.1.1 *Shielded Transfer Canister (STC) Boron Concentration*
LCO 3.1.2 *Shielded Transfer Canister (STC) Loading*
LCO 3.1.3 *Shielded Transfer Canister (STC) Pressure Rise*
LCO 3.1.4 *Shielded Transfer Canister (STC) Unloading*

Design Features 4.1 *Inter-Unit Fuel Transfer*

Program 5.1 *Transport Evaluation Program*
Program 5.2 *Metamic Coupon Sampling Program*
Program 5.3 *Technical Specifications Bases Control Program*

The proposed amendment adds Appendix C LCO 3.1.1 *Shielded Transfer Canister (STC) Boron Concentration*. The purpose of the LCO and associated Action and Surveillance Requirement is to place controls on the STC boron concentration whenever fuel is in the STC to ensure compliance with the accident analysis assumptions during loading, transfer, and unloading operations.

The proposed amendment adds Appendix C LCO 3.1.2 *Shielded Transfer Canister (STC) Loading*. The purpose of the LCO and associated Action and Surveillance Requirement is to place controls on the loading of the STC within the IP3 spent fuel pit to ensure compliance with accident analysis assumptions and to take immediate action to restore compliance should the LCO not be met. The proposed amendment also adds a new Appendix C Design Feature 4.1.2 *Criticality* that ensures the design of the STC is in compliance with the criticality analysis, prevents inadvertent drainage of the STC, and restricts the maximum capacity of the STC to 12 fuel assemblies. In addition, a new Appendix C Program 5.2 Metamic Coupon Sampling Program is proposed to ensure that the characteristics of Metamic assumed in the criticality analysis are preserved.

The proposed amendment adds Appendix C LCO 3.1.3 *Shielded Transfer Canister (STC) Pressure Rise*. The purpose of the LCO and associated Action and Surveillance Requirement is to detect an accidental misloading of a high decay heat fuel assembly within the IP3 fuel handling building and to take appropriate actions prior to transfer operations.

The previously evaluated accidents that must be considered are a criticality accident, a boron dilution accident in the spent fuel pit, a fuel handling accident (FHA), a loss of spent fuel pit cooling and natural events.

Criticality Accidents

The probability of a criticality accident at IP3 is not increased because proposed Appendix C LCO 3.1.2 *Shielded Transfer Canister (STC) Loading* requires that the IP3 spent fuel assemblies transferred to the STC must be in an approved STC cell location.

Administrative controls will be established to ensure fuel movement under the requirements of this LCO are in compliance with the criticality analyses described in this amendment request and, therefore, these fuel movements do not increase the probability of a criticality accident. The probability for a criticality event due to neutronic coupling while the STC is in the spent fuel pit is negligible because of the STC steel and lead vessel walls and the minimum distance between the STC and the nearest spent fuel rack will be maintained by procedure.

The consequences of a criticality accident within the spent fuel pit are not changed because the fuel assemblies are spaced in a pattern within the STC and pit that continue to preserve criticality accident analyses assumptions.

Boron Dilution Accident

The probability of a boron dilution event remains the same because the proposed change does not alter the manner in which the IP3 spent fuel cooling system or any other plant system is operated or otherwise increase the likelihood of adding significant quantities of unborated water into the spent fuel pit. In addition, the STC is loaded in the IP3 spent fuel pit, where the boron concentration in the STC is controlled by the new Appendix C LCO 3.1.1 *STC Boron Concentration* that imposes a minimum boron concentration limit of 2000 ppm.

The consequences of the boron dilution event remain unchanged because the minimum concentration of soluble boron in the spent fuel pit required by the IP3 Technical Specifications remains unchanged (1,000 ppm). The reactivity of the STC filled with the most reactive combination of approved fuel assemblies in unborated water results in a k_{eff} less than 0.95. Thus, even in the unlikely event of a complete dilution of the spent fuel pit water, the STC will remain safely subcritical.

Fuel Handling Accident

The probability of an FHA which includes a fuel assembly drop accident and a fuel cask drop accident remain remote because of the many administrative controls and physical limitations imposed on fuel-handling operations and will not increase significantly due to the proposed changes because the individual fuel assemblies will be moved from the spent fuel pit racks to the STC in the same manner, using the same equipment, procedures, and other administrative controls (i.e. fuel move sheets) that are currently used. The fuel basket design in the STC emulates that of a spent fuel rack, making the individual fuel assembly movement operation the same as in current practice.
The consequences of the existing fuel handling accident remain bounding because only IP3 fuel is being moved in the IP3 spent fuel pit. Moreover, the IP3 fuel assemblies to be transferred to the STC must have a post-irradiation cooling time of greater or equal to 5 years. This compares

with a cooling time of 84 hours used in the existing FHA radiological analysis. The 5-year cooling time results in a significant reduction in the radioactive source term available for release from a damaged fuel assembly compared to the source term considered in the design basis FHA radiological analysis. The consequences of the previously analyzed fuel assembly drop accident, therefore, continue to provide a bounding estimated offsite dose for this accident. In addition, the consequences of a dropped fuel assembly on the STC has been evaluated from a criticality perspective and it has been determined that the fuel storage array remains subcritical.

The probability of an STC drop in the truck bay, into the spent fuel pit, or in transit between these two locations is highly improbable because of the many administrative controls and physical limitations imposed on cask-handling operations and will not increase significantly due to the proposed changes because the STC will be moved into, and removed from, the spent fuel pit using a single failure proof lifting system and procedures similar to those already in use for dry cask storage activities. A single failure proof lifting system includes the 40-ton IP3 upgraded cask handling crane, special lifting devices, and interfacing lift points on the STC. The vertical drop of a HI-TRAC 100D containing a STC is considered sufficiently unlikely as not to increase the overall probability of a FHA due to the short period of time when suspended from the VCT before the redundant drop protection design features are installed. In addition, the VCT lifting equipment is designed in accordance with the requirements of Appendix C Program 5.1 *Transport Evaluation Program*.

The consequences of the existing fuel cask drop accident inside the FSB as described in the UFSAR remain bounding because the STC will only be lifted using a single failure proof lifting system inside the FSB, as described above. A drop of the HI-TRAC containing a fuel-loaded STC while suspended from the VCT was analyzed for the short period of time outdoors when the VCT does not have its redundant drop protection design features installed. The physical design of the STC and HI-TRAC 100D effectively precludes significant effluent releases as determined by the analysis of the HI-TRAC 100D vertical drop accident that demonstrates that the drop event would not result in any unacceptable consequence for the transfer cask and its contents.

Loss of Spent Fuel Pool Cooling

The probability of a loss of spent fuel pit cooling remains the same because the proposed change does not alter the manner in which the IP3 spent fuel cooling loop is operated, designed or maintained.

The consequences of a loss of spent fuel pit cooling remains the same because the thermal design basis for the spent fuel pit cooling loop provides for all fuel pit rack locations to be filled at the end of a full core discharge and therefore the design basis heat load effectively includes any heat load associated with the assemblies within the STC.

Natural Events

The consequences of a seismic event with an STC in the spent fuel pit, with the STC loaded into the HI-TRAC 100D, and with the HI-TRAC loaded into the vertical cask transporter have been evaluated and it has been determined that these components will not tip over during a design basis earthquake. Therefore, there are no significant dose consequences associated with this event.

The consequences of extreme environmental events such as high winds, tornado, and tornado –borne missiles have also been considered and in fact are part of the certification of HI-TRAC 100D in Docket No. 72-1014, where it is shown that the fuel is protected. In addition, should the water jacket of the HI-TRAC 100D be penetrated by a missile and all jacket water lost, analyses have demonstrated that no design limits would be exceeded. Therefore, there are no significant dose consequences associated with these events. A lightning strike could ignite the fuel in the vertical cask transporter resulting in engulfment of the HI-TRAC 100D, however, analyses have demonstrated that no design limits are exceeded. Therefore, there are no significant dose consequences associated with this event. The design basis flood event results in a water level below the elevation of the heavy haul path, therefore, there are no significant dose consequences associated with this event.

The breakdown of a loaded vertical cask transporter leaving HI-TRAC 100D exposed to potential high ambient temperatures for a prolonged period of time has been analyzed with all design criteria satisfied. Therefore, there are no significant dose consequences associated with these events.

Therefore, the proposed change does not involve a significant increase in the probability or consequences of an accident previously evaluated.

2. Does the proposed amendment create the possibility of a new or different kind of accident from any accident previously evaluated?

Response: No.

The IP3 fuel assemblies selected for loading into the STC in the IP3 spent fuel pit are required to meet the proposed new Appendix C LCO 3.1.2 *Shielded Transfer Canister (STC) Loading.* The fuel basket design in the STC emulates that of a spent fuel rack, making the individual fuel assembly movement operation the same as in current practice using appropriate procedural controls to ensure each fuel assembly is moved safely and into the correct STC cell location as specified on the fuel move sheet . There are no changes proposed to the spent fuel pit storage racks or the manner in which spent fuel is moved from the reactor to the spent fuel pit. All limits for spent fuel storage in the IP3 spent fuel pit will remain the same and will continue to be complied with. The vertical drop of a HI-TRAC 100D containing a STC when suspended from the VCT prior to the redundant drop protection design features being installed has been evaluated and is bounded by the existing FHA. Thus, the existing fuel handling accident bounds the STC unloading operation and a HI-TRAC vertical drop and, therefore, no new or different fuel handling accident is created.

The transfer of certain IP3 spent fuel assemblies to IP2 does not adversely alter the design, analysis, or operation of the IP3 spent fuel pit. This amendment involves the removal of IP3 fuel from the IP3 spent fuel pit as part of needed fuel management and to restore fuel core offload capability in the IP3 pit. No changes to the spent fuel pit capacity or cooling system design are involved.

The proposed amendment does not alter the operation of any plant cooling systems nor does it create a new source of unborated water that could be injected into the spent fuel pit or affect the ability of systems to mitigate a boron dilution event. The STC has been designed and its contents so limited that even if fully de-borated, the content would not reach criticality, with k_{eff}

remaining less than 0.95. Appendix C LCO 3.1.1 *Shielded Transfer Canister (STC) Boron Concentration* ensure the boron concentration of the water in the STC meets the boron concentration requirements of the IP2 spent fuel pit.

The collapse of the roadway during transport resulting in cask rollover and potential loss of water inventory and potential large radioactive release is not a credible accident because of the structural stability of the VCT and the measures taken to ensure that the haul path is structurally sound. These measures include an evaluation of the haul path that includes ground penetrating radar and/or soil compaction studies. In addition, a non-mechanistic tipover analysis of the loaded HI-TRAC transfer cask demonstrates that there is no degradation in the margin of safety engineered in the STC and the HI-TRAC. In addition, as a defense in depth measure, the non-mechanistic tipover of a loaded STC within the HI-TRAC during transfer operations has been evaluated. The analyses demonstrate structural integrity, radiological confinement, sufficient shielding, fuel integrity and sufficient thermal performance.

The inadvertent loading and subsequent transport of a high decay heat assembly in the STC is precluded by robust fuel handling procedures and safety features. In addition a new Appendix C LCO 3.1.3 *Shielded Transfer Canister (STC) Pressure Rise* and associated actions and surveillance would detect an accidental misloading of a high decay heat fuel assembly within the IP3 fuel handling building and to take appropriate actions prior to transfer operations.

Therefore, the proposed change does not create the possibility of a new or different kind of accident from any previously evaluated.

3. Does the proposed amendment involve a significant reduction in a margin of safety?

Response: No.

The proposed STC loading Appendix C TS 3.1.2 *Shielded Transfer Canister (STC) Loading* and the associated fuel selection procedures used to control the loading of the STC at IP3 will ensure that all fuel to be loaded into the STC meets the requirements of the accident analyses.

The presence of the STC in the IP3 spent fuel pit has been analyzed and found to be acceptable. The spent fuel pit was originally designed to accommodate a spent fuel shipping cask and the STC is similar in physical dimensions to a shipping cask. Administrative controls will be in place during STC handling operations to ensure that the spent fuel pit water level is maintained within limits. Any criticality event caused by neutronic coupling between the STC and the fuel in the spent fuel racks is precluded due to the thick steel and lead walls of the STC and the distance between the STC and the nearest spent fuel in the racks.
The proposed amendment does not involve changes to any plant operating systems used to cool the spent fuel pit water or respond to unanticipated events or accidents.

Therefore, the proposed change does not involve a significant reduction in a margin of safety.

Based on the above, Entergy concludes that the proposed amendment to the IP3 Technical Specifications presents no significant hazards consideration under the standards set forth in 10 CFR 50.92(c), and, accordingly, a finding of "no significant hazards consideration" is justified.

ATTACHMENT 11 TO NL-10-093

Commitments Pertaining to Inter-Unit Fuel Transfer

Entergy Nuclear Operations, Inc.
Indian Point Units 2 and 3
Docket Nos. 50-247 and 50-286

List of Regulatory Commitments

The following table identifies those actions committed to by Entergy in this document. Any other statements in this submittal are provided for information purposes and are not considered to be regulatory commitments.

#	COMMITMENT	IMPLEMENTATION SCHEDULE
1	The heavy haul path will be entirely within the IPEC owner protected area (PA). In order to achieve this objective the PA boundary will need to be modified. These modifications will be performed under a separate project and scheduled for completion at a time commensurate with the need to transfer fuel from IP3 to IP2. Entergy commits to moving the PA boundary as described prior to the first inter-unit transfer	Prior to the first inter-unit transfer of fuel
2	The inter-unit fuel transfer solution involves the complete replacement (bridge and trolley) of the existing IP3 cask handling crane with a single-failure-proof design while maintaining the 40-ton capacity. The replacement of the crane is not part of the LAR and will be implemented pursuant to the provisions of 10 CFR 50.59. Therefore, Entergy commits to the guidelines of Appendix C to NUREG-0612 and NUREG-0554, except that the criteria of ASME NOG-1, 2004, may be employed as an acceptable alternative to the NUREG-0554 criteria.	Prior to the first inter-unit transfer of fuel
3	The transport roadway and any buried safety-related components beneath it that could be affected by the inter-unit transfer of fuel will be shown to have acceptable structural capacity including the consideration of underground utilities. Entergy commits to performing this evaluation and implementing any modifications determined to be necessary prior to the first inter-unit transfer of fuel.	Prior to the first inter-unit transfer of fuel

ENCLOSURE 3 TO NL-10-093

Affidavit executed pursuant to 10 CFR 2.390 governing the proprietary information included in the Holtec reports and evaluations.

Entergy Nuclear Operations, Inc.
Indian Point Units 2 and 3
Docket Nos. 50-247 and 50-286

HOLTEC INTERNATIONAL

Holtec Center, 555 Lincoln Drive West, Marlton, NJ 08053
Telephone (856) 797-0900
Fax (856) 797-0909

October 1, 2010

Mr. Roger Waters
Licensing Manager
Indian Point Energy Center
450 Broadway
GSB Second Floor Licensing
Buchanan, NY 10511-0249

Document ID: 1775028

Subject: Information to Support Licensing Submittal on Inter-Unit Fuel Transfer

Dear Mr. Waters:

Holtec is pleased to approve the release of the following information to the United States Nuclear Regulatory Commission (USNRC):

Attachment A - HI-2094289R3, "Licensing Report for the Inter Unit Fuel Transfer" (Proprietary)
Attachment B - Responses to NRC RAI dated $ (Non-Proprietary)
Attachment C - Attachment to RAI Response 3-1"Holtec Position Paper DS-337" (Proprietary)
Attachment D - Attachment to RAI Response 8-4 "Supplier Data Sheet for the Seal Material" (Non-Proprietary)
Attachment E - HI-2084109R6, "Shielded Transfer Canister Shielding Calculation" (Proprietary)
Attachment F- HI-2084118R3, "Shielded Transfer Canister Structural Calculation" (Proprietary)
Attachment G- HI-2084176R4, "Shielded Transfer Canister Criticality Calculation" (Proprietary)
Attachment H- HI-2084146R6, "Shielded Transfer Canister Thermal Calculation". (Proprietary)
Attachment I- HI-210470R1, "Non-Mechanistic Tipover Analysis of the HI-TRAC" (Proprietary)
Attachment J- HI-2094486R1, "MCNP Benchmark Calculation" (Proprietary)
Attachment K- HI-2012630R2, "Burnup Credit for MPC-32" (Proprietary)

HOLTEC INTERNATIONAL

Holtec Center, 555 Lincoln Drive West, Marlton, NJ 08053
Telephone (856) 797-0900
Fax (856) 797-0909

Attachment L- HI-2032973R2, "Commercial Reactor Critical Benchmarks for Burnup Credit" (Proprietary)
Attachment M- HI-2032982R2, "Isotopic Benchmarks for Burnup Credit" (Proprietary)

We require that you include this letter along with the attached affidavit pursuant to 10CFR2.390 when submitting Attachment 1 to the USNRC.

The responses to NRC questions have been authored and reviewed by the following individuals:

Response Number	Author	Reviewer
1-1	Veena Gubbi	Tammy Morin
1-2	Tammy Morin	Veena Gubbi
1-3	John Griffiths	Tammy Morin
1-4	Chuck Bullard	Anveshan Bommareddi
3-1	John Griffiths	Veena Gubbi
3-2	Chuck Bullard	Venkat Prabhala
3-3	John Griffiths	Tammy Morin
3-4	Chuck Bullard	Tammy Morin
Chapter 4	Stefan Anton	Vadym Makodym
5-1	Abrar Mohammad	Debu Majumdar
5-2	John Griffiths	Tammy Morin

HOLTEC INTERNATIONAL

Holtec Center, 555 Lincoln Drive West, Marlton, NJ 08053
Telephone (856) 797-0900
Fax (856) 797-0909

Response Number	Author	Reviewer
5-3, 5-4, 5-5, 5-6	Abrar Mohammad	Debu Majumdar
5-7, 5-8, 5-9	John Griffiths	Tammy Morin
5-10, 5-11, 5-12, 5-13	Abrar Mohammad	Debu Majumdar
Chapter 6	Chuck Bullard	Venkat Prabhala
Chapter 7	Kaushik Banerjee	Bret Brickner
8-1, 8-2, 8-3	John Griffiths	Veena Gubbi
8-4, 8-5, 8-6	John Griffiths	Tammy Morin
8-7, 8-8, 8-9	Chuck Bullard	Venkat Prabhala
8-10	Chuck Bullard	John Griffiths
8-11	John Griffiths	Veena Gubbi
Technical Specification	Tammy Morin	Veena Gubbi

Please do not hesitate to contact me at 856-797-0900 x 653 if you have any questions.

Sincerely,

Kevin Cuthill
Project Manager
Holtec International

U.S. Nuclear Regulatory Commission
ATTN: Document Control Desk
Document ID 1775028
Non-Proprietary Attachment

AFFIDAVIT PURSUANT TO 10 CFR 2.390

I, Tammy S. Morin, being duly sworn, depose and state as follows:

(1) I have reviewed the information described in paragraph (2) which is sought to be withheld, and am authorized to apply for its withholding.

(2) The information sought to be withheld is Holtec reports and documents contained in the Attachments (exclusive of Attachments "B" and "D") to Holtec letter Document ID 1775028, containing Holtec Proprietary information.

(3) In making this application for withholding of proprietary information of which it is the owner, Holtec International relies upon the exemption from disclosure set forth in the Freedom of Information Act ("FOIA"), 5 USC Sec. 552(b)(4) and the Trade Secrets Act, 18 USC Sec. 1905, and NRC regulations 10CFR Part 9.17(a)(4), 2.390(a)(4), and 2.390(b)(1) for "trade secrets and commercial or financial information obtained from a person and privileged or confidential" (Exemption 4). The material for which exemption from disclosure is here sought is all "confidential commercial information", and some portions also qualify under the narrower definition of "trade secret", within the meanings assigned to those terms for purposes of FOIA Exemption 4 in, respectively, Critical Mass Energy Project v. Nuclear Regulatory Commission, 975F2d871 (DC Cir. 1992), and Public Citizen Health Research Group v. FDA, 704F2d1280 (DC Cir. 1983).

AFFIDAVIT PURSUANT TO 10 CFR 2.390

(4) Some examples of categories of information which fit into the definition of proprietary information are:

a. Information that discloses a process, method, or apparatus, including supporting data and analyses, where prevention of its use by Holtec's competitors without license from Holtec International constitutes a competitive economic advantage over other companies;

b. Information which, if used by a competitor, would reduce his expenditure of resources or improve his competitive position in the design, manufacture, shipment, installation, assurance of quality, or licensing of a similar product.

c. Information which reveals cost or price information, production, capacities, budget levels, or commercial strategies of Holtec International, its customers, or its suppliers;

d. Information which reveals aspects of past, present, or future Holtec International customer-funded development plans and programs of potential commercial value to Holtec International;

e. Information which discloses patentable subject matter for which it may be desirable to obtain patent protection.

The information sought to be withheld is considered to be proprietary for the reasons set forth in paragraphs 4.a, and 4.b above.

(5) The information sought to be withheld is being submitted to the NRC in confidence. The information (including that compiled from many sources) is of a sort customarily held in confidence by Holtec International, and is in fact so held. The information sought to be withheld has, to the best of my knowledge and belief, consistently been held in confidence by Holtec International. No public disclosure has been made, and it is not available in public sources. All disclosures to third parties, including any required transmittals to the NRC, have

AFFIDAVIT PURSUANT TO 10 CFR 2.390

been made, or must be made, pursuant to regulatory provisions or proprietary agreements which provide for maintenance of the information in confidence. Its initial designation as proprietary information, and the subsequent steps taken to prevent its unauthorized disclosure, are as set forth in paragraphs (6) and (7) following.

(6) Initial approval of proprietary treatment of a document is made by the manager of the originating component, the person most likely to be acquainted with the value and sensitivity of the information in relation to industry knowledge. Access to such documents within Holtec International is limited on a "need to know" basis.

(7) The procedure for approval of external release of such a document typically requires review by the staff manager, project manager, principal scientist or other equivalent authority, by the manager of the cognizant marketing function (or his designee), and by the Legal Operation, for technical content, competitive effect, and determination of the accuracy of the proprietary designation. Disclosures outside Holtec International are limited to regulatory bodies, customers, and potential customers, and their agents, suppliers, and licensees, and others with a legitimate need for the information, and then only in accordance with appropriate regulatory provisions or proprietary agreements.

(8) The information classified as proprietary was developed and compiled by Holtec International at a significant cost to Holtec International. This information is classified as proprietary because it contains detailed descriptions of analytical approaches and methodologies not available elsewhere. This information would provide other parties, including competitors, with information from Holtec International's technical database and the results of evaluations performed by Holtec International. A substantial effort has been expended by Holtec International to develop this information. Release of this information would improve a competitor's position because it would enable Holtec's competitor to copy our technology and offer it for sale in competition with our company, causing us financial injury.

AFFIDAVIT PURSUANT TO 10 CFR 2.390

(9) Public disclosure of the information sought to be withheld is likely to cause substantial harm to Holtec International's competitive position and foreclose or reduce the availability of profit-making opportunities. The information is part of Holtec International's comprehensive spent fuel storage technology base, and its commercial value extends beyond the original development cost. The value of the technology base goes beyond the extensive physical database and analytical methodology, and includes development of the expertise to determine and apply the appropriate evaluation process.

The research, development, engineering, and analytical costs comprise a substantial investment of time and money by Holtec International.

The precise value of the expertise to devise an evaluation process and apply the correct analytical methodology is difficult to quantify, but it clearly is substantial.

Holtec International's competitive advantage will be lost if its competitors are able to use the results of the Holtec International experience to normalize or verify their own process or if they are able to claim an equivalent understanding by demonstrating that they can arrive at the same or similar conclusions.

The value of this information to Holtec International would be lost if the information were disclosed to the public. Making such information available to competitors without their having been required to undertake a similar expenditure of resources would unfairly provide competitors with a windfall, and deprive Holtec International of the opportunity to exercise its competitive advantage to seek an adequate return on its large investment in developing these very valuable analytical tools.

AFFIDAVIT PURSUANT TO 10 CFR 2.390

STATE OF NEW JERSEY)
) ss:
COUNTY OF BURLINGTON)

Tammy S. Morin, being duly sworn, deposes and says:

That she has read the foregoing affidavit and the matters stated therein are true and correct to the best of her knowledge, information, and belief.

Executed at Marlton, New Jersey, this 1st day of October, 2010.

Tammy S. Morin
Holtec International

Subscribed and sworn before me this 1ST day of October, 2010.

Maria C. Massi

MARIA C. MASSI
NOTARY PUBLIC OF NEW JERSEY
My Commission Expires April 25, 2015