PMSTPCOL PEmails

From: Bense, Richard [rhbense@STPEGS.COM]
Sent: Tuesday, October 12, 2010 6:28 PM
To: Muniz, Adrian
Subject: Draft Presentation for Chapter 8 ACRS on October 20,2010
Attachments: ACRS Ch 8 Electricl-10-20-2010 Rev 02.pdf

Adrian,

Attached is a Draft of the Chapter 8 Presentation for the October 20, 2010, ACRS meeting. This presentation is subject to change.

Thanks.

Dick Bense
Licensing Engineer, STP 3 & 4
(361) 972 4802 (Bay City Office)
(215) 353-8857 (mobile)
(215) 362-2552 (home office)
(215) 362-8368 (home)

Hearing Identifier: SouthTexas34Public_EX
Email Number: 2432

Mail Envelope Properties (C7F098E3C31A0141A02043F0B8E656EE26AB909AC2)

Subject: Draft Presentation for Chapter 8 ACRS on October 20,2010
Sent Date: 10/12/2010 6:27:36 PM
Received Date: 10/12/2010 6:27:43 PM
From: Bense, Richard

Created By: rhbense@STPEGS.COM

Recipients:
"Muniz, Adrian" <Adrian.Muniz@nrc.gov>
Tracking Status: None

Post Office: exgmb1.CORP.STPEGS.NET

Files	**Size**	**Date & Time**
MESSAGE	326	10/12/2010 6:27:43 PM
ACRS Ch 8 Electricl-10-20-2010 Rev 02.pdf	621795	

Options
Priority: Standard
Return Notification: No
Reply Requested: No
Sensitivity: Normal
Expiration Date:
Recipients Received:

South Texas Project Units 3 & 4
Presentation to ACRS Subcommittee
Chapter 8
Electric Power

DRAFT

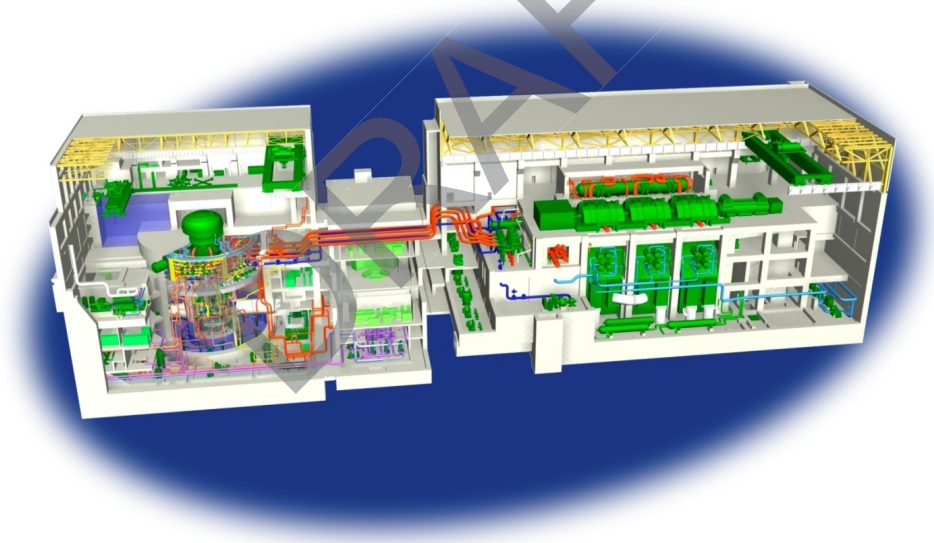

Agenda

- Items not closed at ACRS Presentation for Chapter 8 on June 8, 2010:
  - Inspection and Testing of Inaccessible Cable;
  - Combustion Turbine Generator ability to support one Class 1E bus within 10 minutes of initiation of Station Blackout;
  - Electrical System Switching Logic during Transients.
- Conclusion

DRAFT

Attendees

Scott Head	Regulatory Affairs Manager, STP 3&4
Evans Heacock	Design Engineering Lead, STP 3&4
Richard Bense	Licensing, STP 3&4
Coley Chappell	Licensing, STP 3&4

DRAFT

Inspection or Testing of Inaccessible Cable :

- Generic Letter 2007-01:
  - Requires a description of programs that inspect, test, and/or monitor degradation of inaccessible or underground cables that support equipment within the scope of 10 CFR 50.65 (the Maintenance Rule).
  - RAI 08.02-24, Revision 1, revised FSAR to include requirements for testing, inspection, and trending of condition of electrical cable.

DRAFT

Inspection or Testing of Inaccessible Cable (continued)

- FSAR 8.3.3.2.1S
  Testing of Power, Control, and Instrumentation Cables
  - Medium voltage power cables, 480 Vac, 120 Vac and 125/250 Vdc power cables, control cables, and instrumentation cables which are underground and which support equipment covered by the Maintenance Rule are monitored and the results trended using techniques and at a frequency determined appropriate for the application based on a review of industry best practices.
- FSAR 8.3.3.9S
  Monitoring of Manholes
  - Monitoring systems are installed in manholes to identify high water level due to failure of the pumps. Additionally, manholes will be inspected every year to ensure water levels are below the lowest layer of cables, to confirm sump pump and alarm functionality, and to ensure proper seating of manhole covers. If required, manhole covers will be sealed to minimize water ingression.

DRAFT

Station Blackout:

Demonstrate that the CTG is capable of powering one safety bus within 10 minutes after the onset of an SBO (10 CFR 50.63 (c)(2)).

- CTG start sequence, automatic connections to the PIP bus, operator actions to verify or establish the appropriate conditions for energization of a Class 1E bus, and closing breakers to energize the Class 1E bus can be completed in less than 10 minutes.
- FSAR 9.5.11.1 and 9.5.11.2 require that CTG be capable of being manually connected to SBO shutdown loads (via any one of the Class 1E diesel generator buses) from the main control room within ten minutes from the beginning of the SBO.

DRAFT

Switching Logic for Electrical Transients

- Switching Logic for Electrical Transients was addressed during the June 8, 2010, meeting.

  STP is prepared to address any additional questions today.

DRAFT

Switching Logic for Electrical Transients (continued)

Performance of switching logic under various electrical transients.

For the loss of a UAT:

- Generator breaker and switchyard breakers for the generator OPEN.
- Source breakers from UATs to all PG buses, all PIP buses, and the Division I and II Class 1E buses OPEN.
- DGs for Divisions 1 and II START on bus undervoltage and Divisions I and II CONNECT to their respective DGs.
- Division III Class 1E bus remains energized on RAT A.
- CTG starts on loss of power (undervoltage) to two PIP buses, CTG3 bus remains energized through RAT B.
- Two pre-selected PIP buses are powered upon transfer to bus CTG3.

DRAFT

Switching Logic for Electrical Transients (continued)

Switching logic for the loss of a UAT electrical transient:

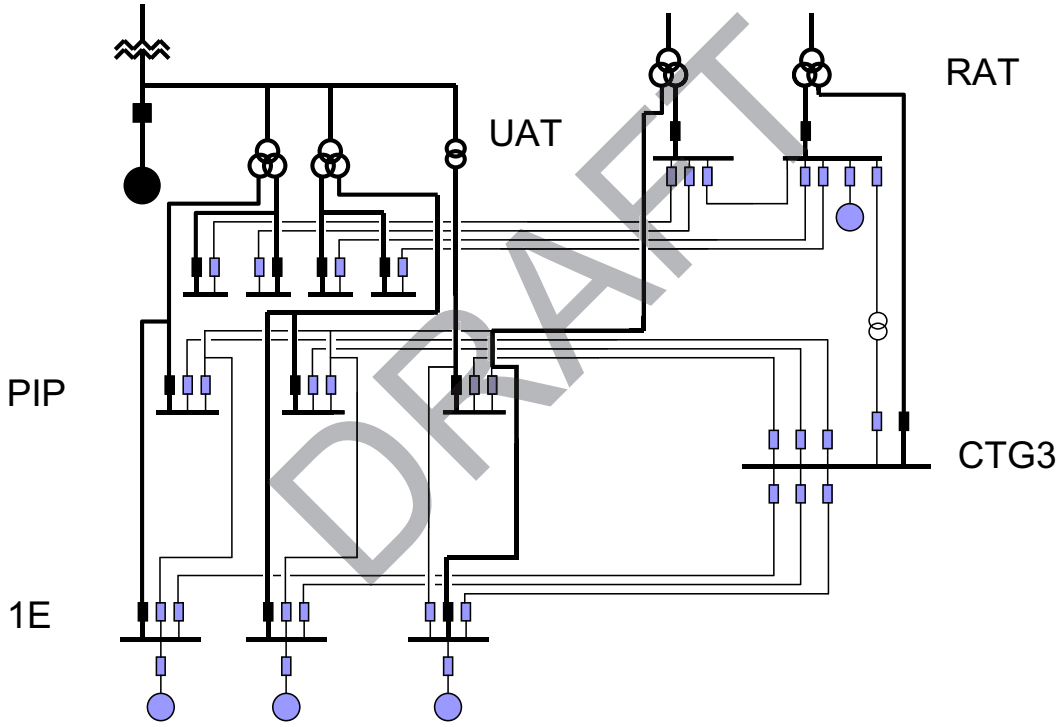

DRAFT

Switching Logic for Electrical Transients (continued)

Switching logic for the loss of a UAT electrical transient:

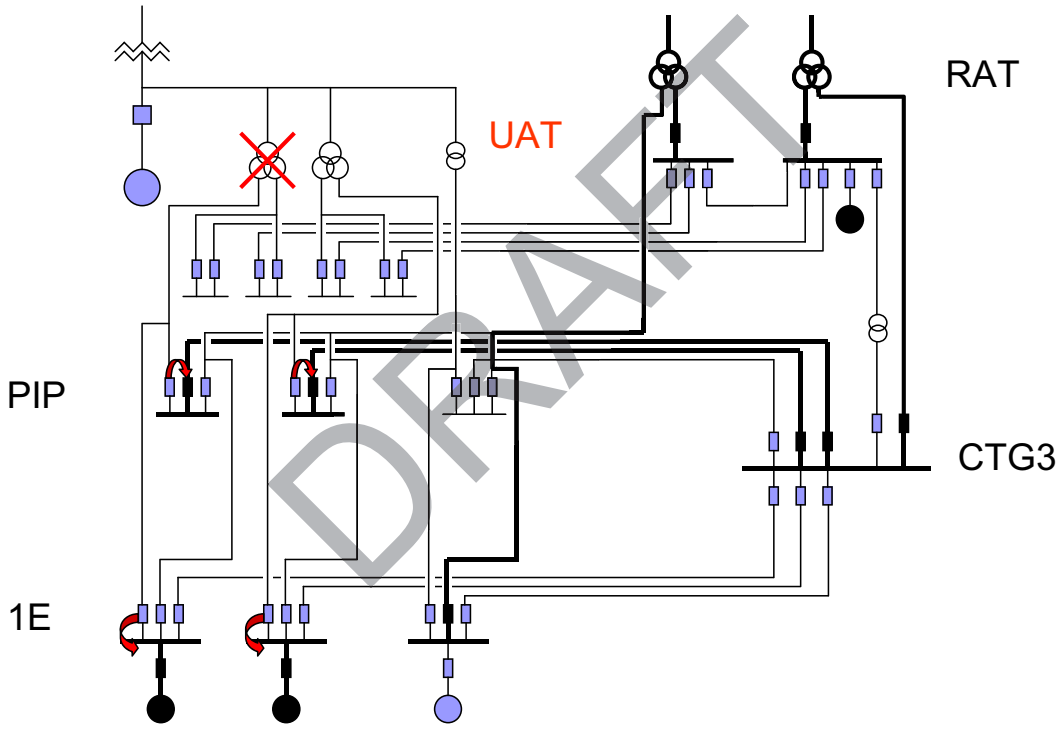

DRAFT

Chapter 8

Questions and Comments

DRAFT