Text updates for response to Request for Supplemental Information (RSI) 6-2:

Appendix 6.9.5

Current text:
The fuel rod contents are evaluated by calculating an infinite k_{eff} for a range of fuel rod pitch and diameter to determine a maximum reactivity. The actual fuel rod configurations using the dimensions of the pellet and cladding, as shown in Table 6-15 are used in the evaluation.

Updated text:
The fuel rod contents are evaluated by calculating an infinite k_{eff} for a range of fuel rod pitches that encompasses peak reactivity to determine a maximum reactivity. The fuel rod designs are categorized by cylindrical dimensions and evaluated based on category dimensions, as shown in Table 6-50. An optimum configuration of fuel rod pitch and diameter as determined by this evaluation is used in the package assessment for transport of fuel rods.

6.3.4.1.2 Lattice Expansion, Fuel Rods (**Page 6-37)**

Current Text:
Fuel Rods
The evaluation for fuel rods determines a pitch for the maximum k_{eff} for each of the rod containers. The detailed evaluation used to determine the optimum pitch is in Appendix 6.9.5.

The optimum fuel rod configuration is most sensitive to the pitch and the maximum k_{eff} value is not sensitive to differences in the dimensions for fuel rod parameters characterized by the fuel designs as shown in Table 6-15. The k_{eff} values for the optimum pitch of the fuel rod configurations are not significantly different. One configuration of the BWR fuel rod configuration is used in the package assessment for transport of fuel rods.

Updated Text:
The evaluation for fuel rods determines a pitch for the maximum k_{eff} for each of the fuel rod category, as defined in Appendix 6.9.5. The detailed evaluation used to determine the optimum pitch is in Appendix 6.9.5.

The optimum fuel rod configuration is most sensitive to the pitch and the maximum k_{eff} value is not sensitive to differences in the dimensions for fuel rod parameters characterized by the fuel designs as shown in Table 6-15. The k_{eff} values for the optimum pitch of the fuel rod configurations are not significantly different.

As shown in Table 6-15, the BWR_G3 fuel rod category at a pitch of 0.9 cm is the most reactive fuel rod configuration. Hence, the BWR_G3 rod configuration is evaluated in the package with

confinement provided by the inner container (without rod container) or the rod container (rod pipe, rod box, or protective case) for the package transport evaluations.

In addition to the water moderation, polyethylene packing materials provide moderation of the contents consistent with the transport condition. For fuel rod transport a polyethylene sheathing is considered for all transport conditions. The effect of moderation by packing materials that are part of the contents is evaluated by assuming that an equivalent mass of material is distributed uniformly around each of the fuel rods. This plastic sheathing has been conservatively included in the model as 0.015 inch (0.0381 cm) thick high density polyethylene wrapped around the cladding at a 0.925 g/cm^3 density, representing high density polyethylene.

6.3.4.1.3 Summary of Most Reactive Configuration for Contents

Current Text:
Fuel Rods
The BWR_G3 fuel rod category for pitch range of 0.70 to 1.0 cm is used to represent the most reactive fuel rod configuration for the evaluation of the package transport conditions. The BWR_G3 rod configuration is evaluated in the package with confinement provided by only the inner container (without rod container) and the rod container (rod pipe, rod box, or protective case).

Updated Text:
The BWR_G3 fuel rod category is used to represent the most reactive fuel rod configuration for the evaluation of the package transport conditions. The BWR_G3 rod configuration is evaluated in the package with confinement provided by only the inner container (without rod container) or the rod container (rod pipe, rod box, or protective case).

Section 6.4.2.1.2, Individual Package in Isolation, Fuel Rod Contents Results

Current text:
The individual package with fuel rod contents is evaluated using the BWR_G3 fuel rod configuration. Each fuel rod is wrapped in a plastic sheath. Three fuel rod containers are evaluated (rod pipe, rod box, and protective case). The contents evaluated at an optimum rod pitch with fuel rod container and 25 fuel rods at the maximum pitch without the fuel rod container.

Updated text:
Fuel rods may be transported either packaged in a rod container or as a cluster of fuel rods without a rod container. The individual package with fuel rod contents is evaluated using the BWR_G3 fuel rod category. Three fuel rod containers are evaluated: rod pipe, rod box, and protective case. For fuel rod shipment without a rod container, a maximum of 25 fuel rods in each compartment of the inner container is permissible. For a rod container, the number of fuel rods is limited by the capacity

of the rod container. The contents is evaluated through the optimum rod pitch within a fuel rod container and for a cluster of 25 fuel rods to the maximum pitch of the IC. Normal packing materials (polyethylene sleeve) are present for all transport conditions, and wrap each individual fuel rod.

The routine and normal condition of transport is for the fuel rods to be close packed, represented by a pitch of the nominal fuel rod outer diameter with normal packing materials included. Accident conditions of transport are representative of the fuel lattice expansion of the active fuel length to the confinement boundaries of either the rod container for fuel rods in a rod container or the IC for clustered rods without a rod container.

Section 6.5.2.1.3, Package Arrays under Normal Conditions of Transport, Fuel Rod Contents Results

Current text:
The package array with fuel rod contents is evaluated using the BWR_G3 fuel rod configuration. Each fuel rod is wrapped in a plastic sheath. Three fuel rod containers are evaluated (rod pipe, rod box, and protective case). The contents evaluated at an optimum rod pitch with fuel rod container and 25 fuel rods at the maximum pitch without the fuel rod container.

Updated text:
Fuel rods may be transported either packaged in a rod container or as a cluster of fuel rods without a rod container. The package array with fuel rod contents is evaluated using the BWR_G3 fuel rod category. Three fuel rod containers are evaluated: rod pipe, rod box, and protective case. For fuel rod shipment without a rod container, a maximum of 25 fuel rods in each compartment of the inner container is permissible. For a rod container, the number of fuel rods is limited by the capacity of the rod container. The routine and normal condition of transport is for the fuel rods to be close packed, represented by a pitch of the nominal fuel rod outer diameter with normal packing materials included. The rod container generating the peak reactivity along with the fuel rod cluster without a rod container are evaluated for the normal transport conditions.

Table 6-28 Package Array (Fuel Rods)

		BWR_G3	
Array Size	**5N**	k_p	σ
Fuel Rods with Rod Container	361	0.4952	0.00022
Fuel Rods without Rod Container	361	0.21649	0.00015

Section 6.6.2.1.2, Package Arrays under Accident Conditions of Transport, Fuel Rod Contents Results

Current text:
The package array with fuel rod contents is evaluated using the BWR_G3 fuel rod configuration. Each fuel rod is wrapped in a plastic sheath. Three fuel rod containers are evaluated (rod pipe, rod box, and protective case). The contents evaluated at an optimum rod pitch with fuel rod container and 25 fuel rods at the maximum pitch without the fuel rod container. The number 2N is fixed at 144 packages.

Updated text:
Fuel rods may be transported either packaged in a rod container or as a cluster of fuel rods without a rod container. The package array with fuel rod contents is evaluated using the BWR_G3 fuel rod category. Three fuel rod containers are evaluated: rod pipe, rod box, and protective case. For fuel rod shipment without a rod container, a maximum of 25 fuel rods in each compartment of the inner container is permissible. For a rod container, the number of fuel rods is limited by the capacity of the rod container. The contents is evaluated through the optimum rod pitch within a fuel rod container and for a cluster of 25 fuel rods to the maximum pitch of the IC.

During accident conditions the rod container confines the fuel rods to fixed geometry, where as a cluster of fuel rods are confined only by the inner container. Accident conditions of transport are representative of the fuel lattice expansion of the active fuel length to the confinement boundaries of either the rod container for fuel rods in a rod container or the IC for clustered rods without a rod container. Normal packing materials (polyethylene sleeve) are present for all transport conditions.

Added to Section 6.3.1, General Considerations, Model Configuration

Although loose rods are in reality unconstrained by spacers or other fixtures when loaded into the product containers for storage or shipment, they have been conservatively modeled in fixed lattices with constant spacings between individual rods for optimum moderation.

Protective Case

Square lattices have been considered with the intent of identifying the most reactive arrangement and determining the maximum allowable number of loose rods inside the product protective case that can be transported within the RAJ-II package. This approach to modeling the fuel rods is conservative, since it permits the rods to be spaced in optimally moderated configurations within the cylindrical pipe and eliminates any restriction on the number of rods that can be transported in a rod container. Actual shipments will utilize the full rod container capacity such that the rods will be nearly close-packed in the rod container; however, there a partially loaded rod container is credible.

The protective case is a SS body holding the fuel rods, surrounded by a poly urethane cushioning material. The length of the body has exterior dimensions of 9.7 cm wide by 84 cm tall by 417.6 cm long, composed of 0.4 cm thick SS. The top lid is installed on top of the body and run the length of the case, composed of 0.5 cm thick SS, resulting in an overall case height of 93 cm. The end plates are 0.5 cm thick SS, and result in a modeled case length of 418.6 cm. Assembly pieces such as the lumber shock absorbers, exterior cushioning materials, and structural steel components are conservatively neglected.

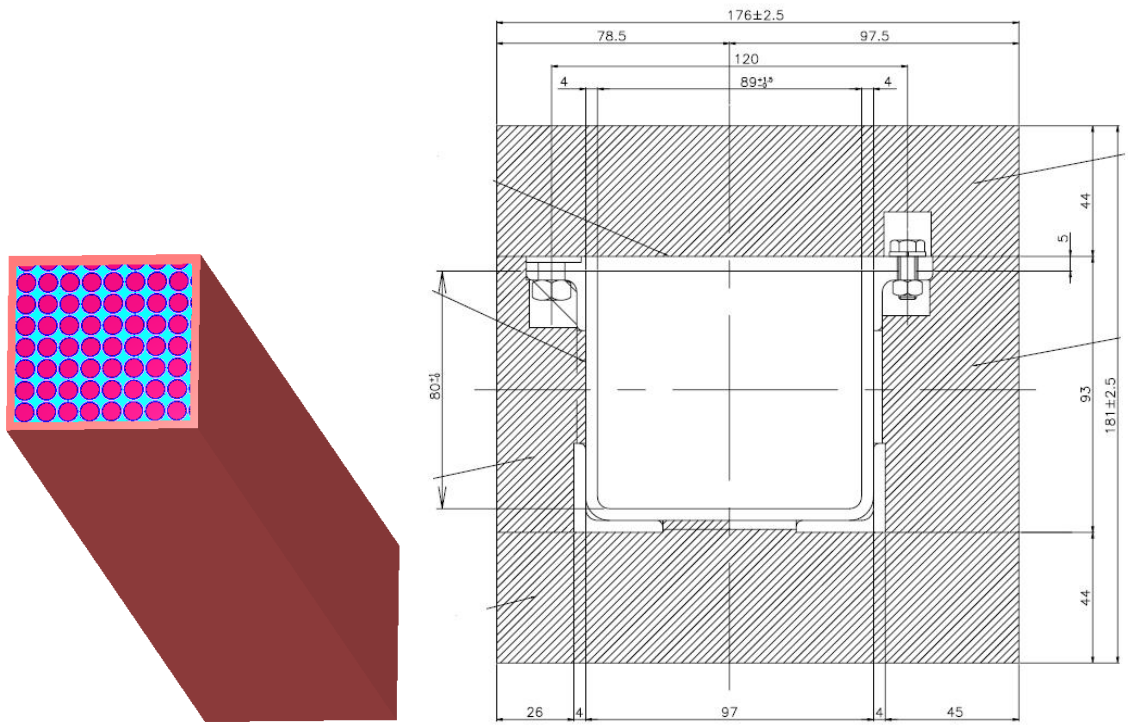

Figure X Protective Case: SCALE Model slice (left), Licensing Drawing (right)

Rod Pipe

Triangular lattices have been considered with the intent of identifying the most reactive arrangement and determining the maximum allowable number of loose rods that can be transported within the RAJ-II package inside the product container of a 5 in. rod pipe. This approach to modeling the fuel rods is conservative, since it permits the rods to be spaced in optimally moderated configurations within the cylindrical pipe and eliminates any restriction on the number of rods that can be transported in a rod container. Actual shipments will utilize the full rod container capacity such that the rods will be nearly close-packed in the rod container; however, there a partially loaded rod container is credible.

The 5 in. SCH 40 pipe container, composed of 304 SS, has an outer diameter of 5.563 in. (14.13 cm) with a 0.258 in. (0.65532 cm) thickness [Ref. 9]. The pipe has a length 424.18 cm plus the end caps, which are 0.5 in. (1.27 cm) thick and modeled with the same exterior dimensions of the pipe body.

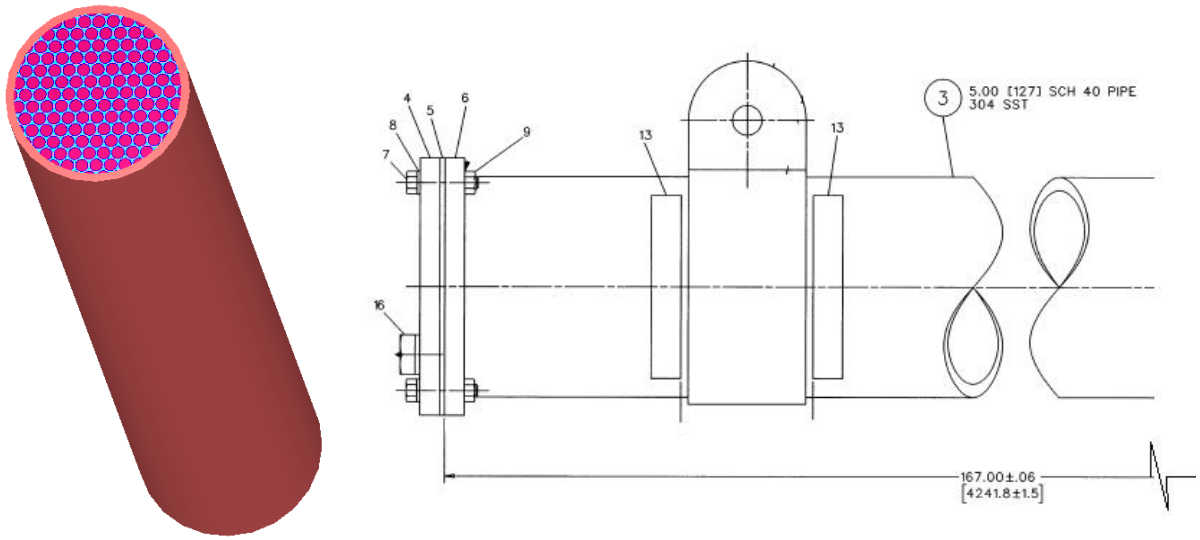

Figure X Rod Pipe: SCALE Model slice (left), Licensing Drawing (right)

WEC Rod Box

Square lattices have been considered with the intent of identifying the most reactive arrangement and determining the maximum allowable number of loose rods inside the product WEC container that can be transported within the RAJ-II package. This approach to modeling the fuel rods is conservative, since it permits the rods to be spaced in optimally moderated configurations within the cylindrical pipe and eliminates any restriction on the number of rods that can be transported in a rod container. Actual shipments will utilize the full rod container capacity such that the rods will be nearly close-packed in the rod container; however, there a partially loaded rod container is credible.

The WEC rod box is a rectangular box, composed of an external shell and internal steel bars limiting the contents spacing. Although not modeled, the shell has large punched holes to avoid water moderation buildup within the container. Since the shell is modeled solid, the internal spacing is fully moderated for hypothetical accident transport conditions.

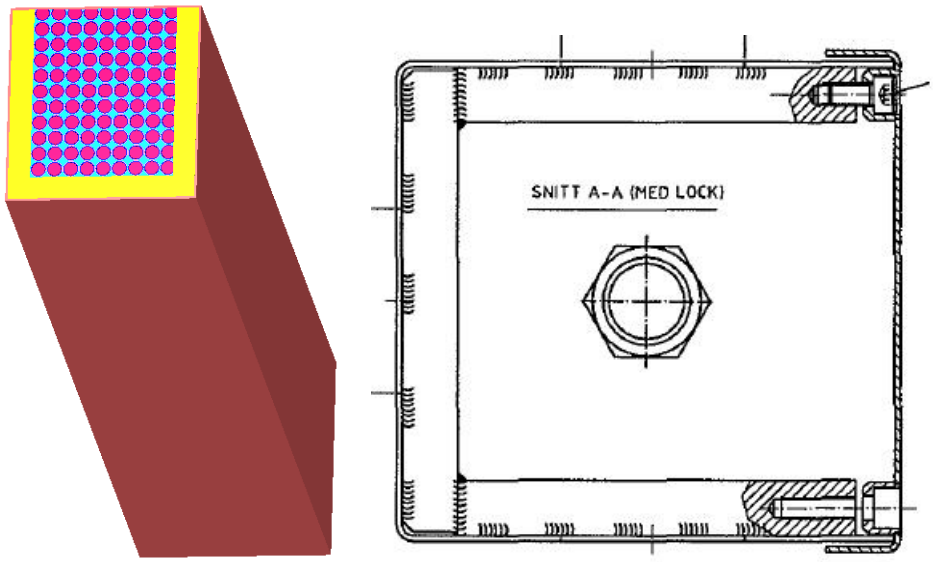

Figure X WEC Rod Box: SCALE Model slice (left), Licensing Drawing (right)