6.0 FRAME AND PLATFORM ANALYSIS

6.1 LOAD COMBINATIONS

6.1.1 The combination of design loads applied to the structures in this calculation has been performed in accordance with section 2.4.1 of Reference 2.1.1. This calculation has omitted some design loads (Ice, Snow, Fluid, Rain, etc) because they are not applicable. For this reason, some of the load combinations listed in the reference have been omitted and only the governing combinations (worst case) are used. Also, equipment loads (OL1, OL2, OL3, etc.) have been added to the appropriate combinations to properly represent operational loads. Any minor differences from the referenced load combinations were made to add additional conservatism.

6.1.2 The Load Combinations used for all the Upper Support Frames are as follows.

$$DL + LL$$
$$DL + LL + OL^{*}$$
$$DL + OL \pm (WL \text{ or } 0.7EL)$$
$$DL + 0.75LL + OL \pm 0.75(WL \text{ or } 0.7EL)$$

$$WL = WLX \text{ or } WLZ$$
$$EL = (ELX \text{ or } ELZ) + ELY$$

6.1.2.1 In addition to the load combinations outlined in Reference 2.1.1, Section 3.3.4.1 of Reference 2.1.3 states "At no time shall the rated load be placed in its most outboard position without a system stability factor of 4." In the RISA-3D analysis, the AISC standard uses 60% of yield strength to determine the member's allowable stress. In order to meet this requirement, PSC is using a load factor of 2.4 (4 x 60% = 2.4) to reach the 4:1 rating (rated hoist load x 2.4/60% = rated hoist load x 4) for the overload calculation of the outrigger beams. The load combination used for the 4:1 calculation is as follows.

$$DL_{USF} + 2.4DL_{PLT} + 2.4LL + OL^{\dagger}$$

6.1.3 The Load Combinations used for all the work platforms are as follows. All lateral loading on the work platforms is excluded because it is considered negligible due to the pendulum effect of hanging from cables. In addition to the required vertical loading, the platforms have been evaluated to five (5) times their rated live load. The live load due to equipment is not included with respect to the 5:1 overload since the weights are not subject to potential overload in the manner that general live load is.

$$DL + LL + OL^{*}$$
$$DL + LLS^{\ddagger} + OL^{*}$$

6.2 MEMBER RESULTS

6.2.1.1 All of the members for each USF have been designed in accordance with ASCE 7-05 [Reference 2.1.1], AISC 9th Edition ASD [Reference 2.1.2] and ASME A120.1-2006 [Reference 2.1.3].

6.2.1.2 All of the Upper Support Frames have been designed for both lateral and vertical loads by analyzing the appropriate load conditions from section 6.1.2 with RISA-3D Version 7.1. All of the Work Platforms were designed for the vertical loads designated in Section 6.1.3 using RISA 3D. RISA-3D calculates the stresses in each member, with respect to the member size and designation, and checks them against the allowable stresses defined in the applicable code.

6.2.1.3 In all cases, the results from the members' stresses, code checks, deflections, and boundary condition reactions were calculated within acceptable limits. The model configuration, applied loads with corresponding code checks and reactions, and a tabulation of the envelope solution inputs and results for each model are included with this calculation in Attachment A through Attachment E. The envelope solution provided in table format presents the worst case data from all load combinations evaluated.

---

* OL refers to different equipment configurations based on which USF/Platform is being considered. All possible configurations are evaluated.
† OL refers, in this case, to the worst case equipment configuration only (e.g. OL1 or OL2, whichever is worse plus OL3 if applicable) for the sake of simplicity/conservatism.
‡ LLS refers to Live Load Special, which is equivalent to 5 times the specified Live Load (i.e. LLS = 5LL)

6.3 Tie-Downs for Uplift and Lateral Restraint

6.3.1 The back end of each frame will be tied down to the containment building rails to prevent uplift at the back end of the frame in two places (one each side) using a rail clamp system custom designed and fabricated by PSC. The tie down will use the same concept as that shown in Reference 2.1.11. The tie-down system will have a capacity of 45 kips at each location, which is an increase over the 40 kips from Reference 2.1.11. The system that is used in lieu of the system in Reference 2.1.11 will be designed and tested acceptably to withstand 45 kips in the same manner previously shown.

6.3.2 During high wind conditions all of the work platforms will be lowered to a secure elevation, where they either will be protected or suitably restrained.

6.3.3 The maximum uplift reaction vector the rear tie down locations will have to sustain is determined by reviewing the resulting reactions from each load combination solution as well as the overturning calculations from Section 6.4. The maximum uplift reactions come from the envelope solutions for all of the Upper Support Frames are all less than the 45 kips allowed.

6.3.4 In order to withstand the lateral design loads, a system of two separate restraints will be used. At all times the frame will be protected from falling off the containment building by utilizing a set of horizontal rollers which will bear on the web of the containment rails. Once each USF has reached its working position it will be laterally restrained in the direction parallel (tangent) to the rails using a combination of rigging components.

6.3.5 The lateral restraints parallel (tangent) to the rails will be made up of rigging components which attach to existing gusset plates located on the base of the frame. The rigging components will be secured around at least two embedment base plates of the containment rail. This configuration will allow adequate movement during an earthquake because there will be some slack in the system. This movement will restrict the use of these restraints to wind loading when the restraints will be tightened by the frame rolling a small amount under wind loading. Figure 6-1 shows the setup of the lateral restraint at each point, and Table 6-1 defines the minimum size the components may be. Example part numbers from McMaster-Carr are listed as well, however these are suggested components, and like items may be substituted.

Figure 6-1: Tangential Lateral Restraints

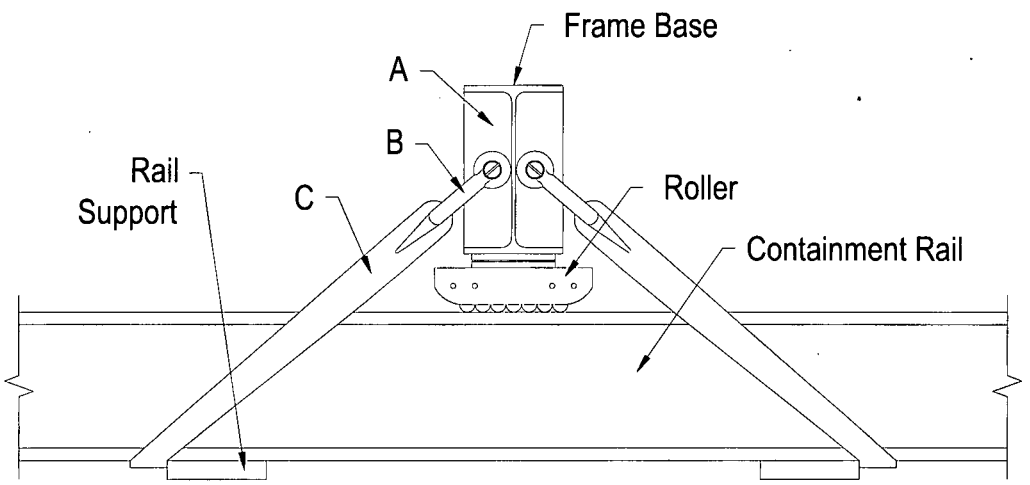

Table 6-1 : Tangential Restraint Components					
Label	**Description**	**Size**	**Rated WLL**	**Ultimate Load**	**McMaster-Carr Part #**
A	**Gusset**	5/8" Plate	N/A	See Below	N/A
B	**Shackle**	3/4"	14K	70K	3663T44
C	**Web Sling**	3" x Length as needed	17.6K	88K	3360T83

6.3.5.1 The hole in the gusset is located 2" from the edge of the plate. The ultimate capacity of each gusset is calculated as:

$$F_U = (2)(1.5")(0.5")(58ksi) = 87^K$$

6.3.5.2 The largest wind load any of the tie downs can possibly see in the parallel (tangential) direction is the entire tornado load on the BT2-60° & BT5-240° Upper Support Frames. This is extremely conservative, since each platform will be tied laterally in both directions at four places, however the safety factor for one tie down is calculated below for the entire tornado load. The shackle, which is the weakest part of the system, is used for the calculation.

$$F.S. = \frac{F_{ULT-Shackle}}{F_{Tornado}} = \frac{70^K}{27.76^K} = \mathbf{2.52} \qquad \therefore \textbf{ACCEPTABLE}$$

6.3.6 The lateral restraints perpendicular (radial) to the containment rails will consist of a stub column dropped from the cross-beams located directly behind the rails. A 15-ton (30^K) screw jack with a 15-ton Hillman machinery roller will bear against the web of the containment rails. Figure 6-2 outlines the basic components included in this restraint. Each of the BT2-60° & BT5-240° Upper Support Frames will have four (4) of these restraint setups (3 along the inside rail and 3 along the outside rail). Each of the BT3-120° & BT4-180° Upper Support Frames will have 8 setups (4 along the inside rail and 4 along the outside rail). The rollers will be positioned as low as possible on the containment rails so as to minimize the bending moment induced into the existing embedments.

FIGURE 6-2: RADIAL LATERAL RESTRAINTS

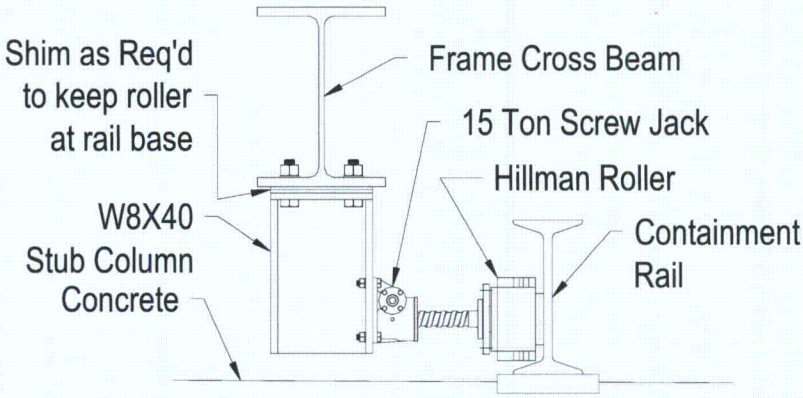

6.3.6.1 The distribution of the restraints will keep the reactions on the frames themselves as well as the containment building rails at a minimum. In their current configuration, the restraints and containment rails are acceptable up to a load of 30 kips. Currently none of the reactions from any load combinations from either platform result in a value greater than 30 kips. Therefore, this restraint system is deemed acceptable by engineering judgment.

6.4 Overturning Stability

6.4.1 Stability factors against overturning have been calculated for all of the Upper Support Frames to ensure their ability to remain on the containment dome under various loading conditions. The stability factor is the ratio of the negative moment (overturning) to the positive moment (tie-backs/counterweight). One of the working load conditions is used to check for the acceptance of the ANSI 4:1 overturning requirement described in section 6.1.2.1. The others include the various working load combinations as well as the transit load (when platform is being moved around the dome) combinations.

6.4.2 Figure 6-3 below shows the location and dimensions of the overturning forces for the BT2-60° & BT5-240° Upper Support Frames during operation. The overturning stability/safety factors are calculated below in Table 6-2 and Table 6-3.

Figure 6-3: BT2-60° & BT5-240° USF Overturning Dimensions

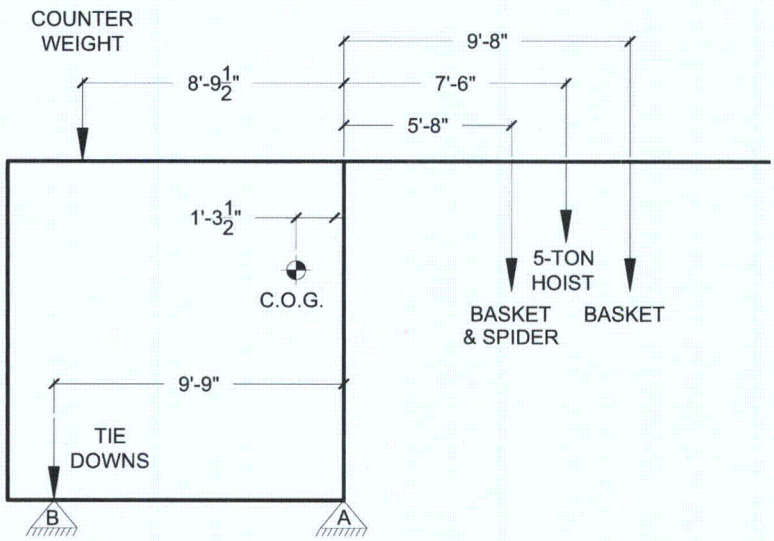

6.4.3 Table 6-2 below calculates the overturning stability factor for the working load condition of the BT2-60° & BT5-240° Upper Support Frames. The working load condition consists of the design working loads (i.e. Basket at full design load, Hoist at full design load at most outboard position, spider baskets at their full design load). The only resisting moment is provided by the counterweight. This condition will never actually occur, but it is used to demonstrate that the tie-downs are not needed under normal design conditions.

Table 6-2: BT2-60° & BT5-240° USF Working Load Overturning

Moment about "A"									
Negative Moment				***Positive Moment***				***Safety Factor***	
Frame Weight		Hoist		Frame Weight		Hoist		Negative Moment =	-178.73 K-ft
Force	Location	Force	Location	Force	Location	Force	Location	Positive Moment =	276.6 K-ft
		11.8 K	7.5 ft.	10.0 K	1.29 ft.			Total Down Force =	63.89 K
Basket		Spider Baskets		Counterweight		Tie Down		Reaction at "A" =	53.85 K
Force	Location	Force	Location	Force	Location	Force	Location	Reaction at "B" =	10.04 K
2.71 K	5.67 ft.	1.25 K	5.67 ft.	30.0 K	8.79 ft.				
2.71 K	5.67 ft.							Saftey Factor	1.55
2.71 K	9.67 ft.								
2.71 K	9.67 ft.								

6.4.4 Table 6-3 calculates the overturning stability factor for the 4:1 requirement. This load condition also consists of the full design working loads; however in this case both the counterweight and tie-downs are considered. In the calculation below, the tie-downs are only evaluated at 25^K to demonstrate what is needed to achieve the 4:1 stability factor even though they will be designed to provide 45^K if needed.

TABLE 6-3: BT2-60° & BT5-240° USF ANSI 4:1 OVERTURNING

Moment about "A"									
Negative Moment				***Positive Moment***				***Safety Factor***	
Frame Weight		Hoist		Frame Weight		Hoist			
Force	Location	Force	Location	Force	Location	Force	Location	Negative Moment =	-178.73 K-ft
		11.8 K	7.5 ft.	10.0 K	1.29 ft.			Positive Moment =	764.1 K-ft
								Total Down Force =	63.89 K
Basket		Spider Baskets		Counterweight		Tie Down		Reaction at "A" =	28.85 K
Force	Location	Force	Location	Force	Location	Force	Location	Reaction at "B" =	35.04 K
2.71 K	5.67 ft.	1.25 K	5.67 ft.	30.0 K	8.79 ft.	25.0 K	9.75 ft.		
2.71 K	5.67 ft.					25.0 K	9.75 ft.	Saftey Factor	4.28
2.71 K	9.67 ft.								
2.71 K	9.67 ft.								

6.4.5 Figure 6-4 below shows the location and dimensions of the overturning forces for the BT2-60° & BT5-240° Upper Support Frames during transit when the front legs of the platform must be raised. The amount of time the USF is in this configuration is extremely minimal, as the only situations which the legs will be raised will be to clear miscellaneous conduit obstructions on the containment dome.

FIGURE 6-4: BT2-60° & BT5-240° USF TRANSIT OVERTURNING DIMENSIONS

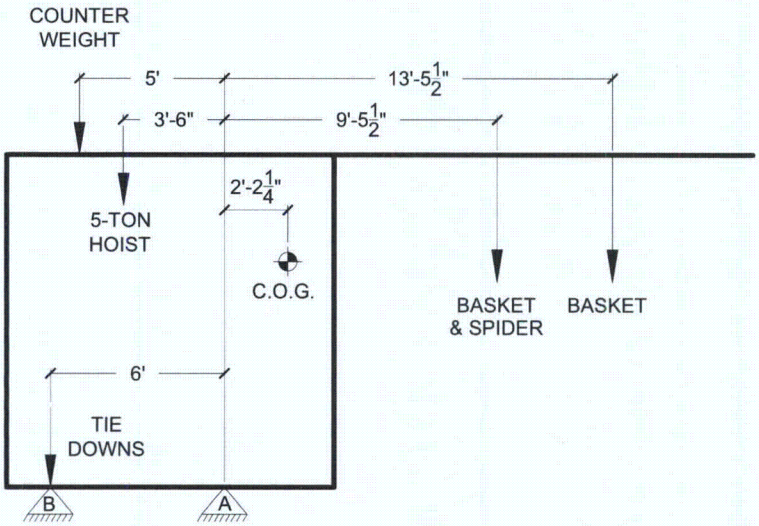

6.4.6 Table 6-4 calculates the overturning stability of the BT2-60° & BT5-240° Upper Support Frames during transit. This loading condition consists of design working loads for both the basket and the spider basket, but not the hoist. The hoist may not be moved outboard, and must be located at the position indicated when the front legs of the platform are raised. Both the counterweight and the tie-downs to the extent necessary are considered in the evaluation.

TABLE 6-4: BT2-60° & BT5-240° USF TRANSIT LOAD OVERTURNING

Moment about "A"											
Negative Moment				***Positive Moment***				***Safety Factor***	
Frame Weight		Hoist		Frame Weight		Hoist			
Force	Location	Force	Location	Force	Location	Force	Location	Negative Moment =	-157.95 K-ft
10.0 K	2.19 ft.					1.8 K	3.5 ft.	Positive Moment =	240.3 K-ft
								Total Down Force =	53.89 K
Basket		Spider Baskets		Counterweight		Tie Down		Reaction at "A" =	47.17 K
Force	Location	Force	Location	Force	Location	Force	Location	Reaction at "B" =	6.72 K
2.71 K	9.46 ft.	1.25 K	9.46 ft.	30.0 K	5.0 ft.	7.0 K	6.0 ft.		
2.71 K	9.46 ft.					7.0 K	6.0 ft.	Saftey Factor	1.52
2.71 K	13.46 ft.								
2.71 K	13.46 ft.								

6.4.7 Figure 6-5 below shows the location and dimensions of the overturning forces for the BT3-120° & BT4-180° Upper Support Frames during operation. The overturning stability/safety factors are calculated below in Table 6-5, Table 6-6 and Table 6-7.

FIGURE 6-5: BT3-120° & BT4-180° USF OVERTURNING DIMENSIONS

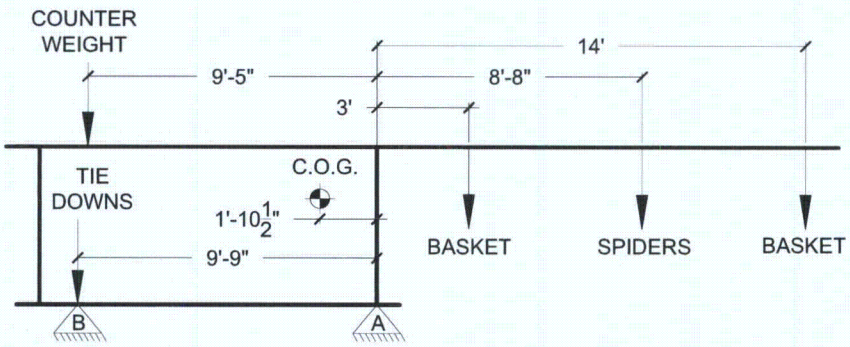

6.4.8 Table 6-5 calculates the overturning stability factor for the coiler setup working load condition of the BT3-120° & BT4-180° Upper Support Frames. The coiler setup working load condition consists of the design working loads when setup to remove tendons. The only resisting moment is provided by the counterweight. This condition will never actually occur, but it is used to demonstrate that the tie-downs are not needed under normal design conditions.

TABLE 6-5: BT3-120° & BT4-180° USF COILER SETUP OVERTURNING

Moment about "A"											
Negative Moment				***Positive Moment***				***Safety Factor***	
Frame Weight		Hoist		Frame Weight		Hoist			
Force	Location	Force	Location	Force	Location	Force	Location	Negative Moment =	-346.38 K-ft
				15.4 K	1.88 ft.			Positive Moment =	537.63 K-ft
								Total Down Force =	110.1 K
Basket		Spider Baskets		Counterweight		Tie Downs		Reaction at "A" =	90.48 K
Force	Location	Force	Location	Force	Location	Force	Location	Reaction at "B" =	19.62 K
9.55 K	3.0 ft.	1.25 K	8.67 ft.	54.0 K	9.42 ft.				
9.55 K	3.0 ft.	1.25 K	8.67 ft.					Saftey Factor	1.55
9.55 K	14.0 ft.								
9.55 K	14.0 ft.								

6.4.9 Table 6-6 calculates the overturning stability factor for the stressing setup working load condition of the BT3-120° & BT4-180° Upper Support Frames. The stressing setup working load condition consists of the design working loads when setup to de-tension and re-tension tendons. The only resisting moment is provided by the counterweight. This condition will never actually occur, but it is used to demonstrate that the tie-downs are not needed under normal design conditions.

TABLE 6-6: BT3-120° & BT4-180° USF STRESSING SETUP OVERTURNING

Moment about "A"							
Negative Moment				***Positive Moment***			
Frame Weight		Hoist		Frame Weight		Hoist	
Force	Location	Force	Location	Force	Location	Force	Location
				15.4 K	1.87 ft.		
Basket		Spider Baskets		Counterweight		Tie Downs	
Force	Location	Force	Location	Force	Location	Force	Location
8.37 K	3.0 ft.	1.25 K	8.67 ft.	54.0 K	9.42 ft.		
8.37 K	3.0 ft.	1.25 K	8.67 ft.				
8.37 K	14.0 ft.						
8.37 K	14.0 ft.						

Safety Factor	
Negative Moment =	-306.09 K-ft
Positive Moment =	537.4 K-ft
Total Down Force =	105.36 K
Reaction at "A" =	81.64 K
Reaction at "B" =	23.72 K
Saftey Factor	**1.76**

6.4.10 Table 6-7 calculates the overturning stability factor for the 4:1 requirement of the BT3-120° & BT4-180° Upper Support Frames. This load condition also consists of the coiler setup design working loads; however in this case both the counterweight and tie-downs are considered. In the calculation below, the tie-downs are only evaluated at 44^K to demonstrate what is needed to achieve the 4:1 stability factor.

TABLE 6-7: BT3-120° & BT4-180° USF ANSI 4:1 OVERTURNING

Moment about "A"							
Negative Moment				***Positive Moment***			
Frame Weight		Hoist		Frame Weight		Hoist	
Force	Location	Force	Location	Force	Location	Force	Location
				15.4 K	1.87 ft.		
Basket		Spider Baskets		Counterweight		Tie Downs	
Force	Location	Force	Location	Force	Location	Force	Location
9.55 K	3.0 ft.	1.25 K	8.67 ft.	54.0 K	9.42 ft.	44.0 K	9.75 ft.
9.55 K	3.0 ft.	1.25 K	8.67 ft.			44.0 K	9.75 ft.
9.55 K	14.0 ft.						
9.55 K	14.0 ft.						

Safety Factor	
Negative Moment =	-346.38 K-ft
Positive Moment =	1395.4 K-ft
Total Down Force =	110.1 K
Reaction at "A" =	46.51 K
Reaction at "B" =	63.59 K
Saftey Factor	**4.03**

6.4.11 Figure 6-6 below shows the location and dimensions of the overturning forces for the BT3-120° & BT4-180° Upper Support Frames during transit when the front legs of the platform must be raised. The amount of time the USF is in this configuration is extremely minimal, as the only situations which the legs will be raised will be to clear miscellaneous conduit obstructions on the containment dome.

FIGURE 6-6: BT3-120° & BT4-180° USF TRANSIT OVERTURNING DIMENSIONS

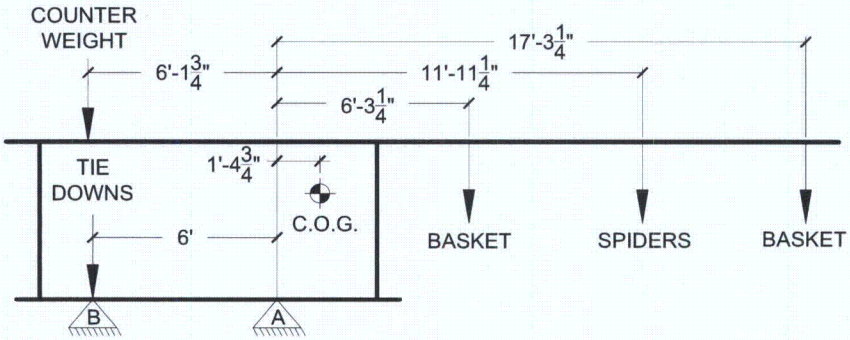

6.4.12 Table 6-8 calculates the overturning stability of the BT3-120° & BT4-180° Upper Support Frames during transit. This loading condition consists of design working loads for both the basket and the spider basket in the coiler setup. This is due to the fact that the coiler setup loads control the design due to their magnitude. Both the counterweight and the tie-downs to the extent necessary are considered in the evaluation.

TABLE 6-8: BT3-120° & BT4-180° USF TRANSIT LOAD OVERTURNING

Moment about "A"											
Negative Moment				***Positive Moment***				***Safety Factor***	
Frame Weight		Hoist		Frame Weight		Hoist			
Force	Location	Force	Location	Force	Location	Force	Location	Negative Moment =	-297.26 K-ft
				15.4 K	1.4 ft.			Positive Moment =	449.66 K-ft
								Total Down Force =	94.62 K
Basket		Spider Baskets		Counterweight		Tie Downs		Reaction at "A" =	77.22 K
Force	Location	Force	Location	Force	Location	Force	Location	Reaction at "B" =	17.4 K
5.68 K	6.27 ft.	1.25 K	11.94 ft.	54.0 K	6.15 ft.	8.0 K	6.0 ft.		
5.68 K	6.27 ft.	1.25 K	11.94 ft.			8.0 K	6.0 ft.	Saftey Factor	1.51
5.68 K	17.27 ft.								
5.68 K	17.27 ft.								

7.0 VERTICAL COILER PLATFORM

7.1 EQUIPMENT ARRANGEMENT

7.1.1 The tendon coiler being used to remove and replace vertical tendons will be placed on a steel platform to allow for efficient movement and positioning between tendons. The frame will be supported on four machinery rollers which will ride on the containment rail system, as well as stub columns and rollers on the concrete in the same manner as the Upper Support Frames.

7.1.2 A hydraulic truck crane will be mounted to the platform and used to assist in the removal and placement of tendons in and out of the coiler. The crane has a 10,000 lb capacity at a maximum radius of 6 feet. The maximum moment the frame must withstand is 60 kip-feet. The crane itself weights 2,250 lbs.

7.1.3 At each of the four rail support points, the platform will be tied down to the rail using PSC custom tie downs similar to those shown in Reference 2.1.11 and Section 6.3. The tie-downs will resist any lateral force applied to the frame as well as any overturning moment resulting from use of the crane. Each tie-down will be designed to withstand 45 kips of uplift force for a total hold-down force of 260 kips.

7.2 DESIGN LOADS

7.2.1 The design loads used in the analysis of the Vertical Coiler Platform are listed below in Table 7-1.

Table 7-1 : Vertical Coiler Platform Loads

Load Description	Class	Total Weight (Kips)	Applied Area (Ft^2)	Equivalent Distributed Load (K/Ft^2)
COILER	D.L.	8.5	40	0.2125
TENDON IN COILER	L.L.	6.0	40	0.15
HYDRAULIC CRANE	D.L.	2.25	-	-
FLOOR LOADING	L.L.	16.0	160	0.100
Vertical Coiler Platform Crane Loads				
Load Description	**Class**	**Applied Moment (K-Ft)**	**Crane Radius (Ft)**	**Equivalent Load (Kips)**
LIFTING TENDON	L.L.	60	10	6.0

7.3 LATERAL LOADS

7.3.1 The wind loading is calculated below. The wind loading has been applied horizontally perpendicular (radial) to the containment rails to check for the platform being blown off the containment dome. The dimensions used in the wind calculation are listed below in Table 7-2

Table 7-2: Coiler Platform Wind Loading Dimensions

Dimension	Perpendicular to Containment
Projected Area (A_p)	86 sq. ft.
Length that Wind Load is Applied in RISA (L_w)	16.0 ft.
* Areas and Lengths calculated from RISA 3D	

7.3.2 Design Wind Load applied perpendicular to containment ($W_\perp$):

$$F = P \cdot A_p \qquad (P \text{ used from Section 2.1.2})$$

$$F_\perp = (230.22)(86) = 19798.92 lb. = \mathbf{19.80^K}$$

Distributed Load Applied in RISA: $W_\perp = \frac{F}{L_W} = \frac{19.80}{16.0} = \mathbf{1.24\ ^k/_{ft}}$

7.3.3 Seismic loading is not considered because the wind loading is the governing condition.

7.4 Frame Analysis

7.4.1 In all cases, the results from the members' stresses, code checks, deflections, and boundary condition reactions were calculated within acceptable limits. The model configuration, applied loads with corresponding code checks and reactions, and a tabulation of the envelope solution inputs and results for each model are included with this calculation in Attachment F. The envelope solution provided in table format presents the worst case data from all load combinations evaluated.

7.5 Tie-Downs and Overturning

7.5.1 All four corners of the frame attached to the containment rails will be tied down using a rail clamp system custom designed and fabricated by PSC. The tie down will use the same concept as that shown in Reference 2.1.11. The tie-down system will have a capacity of 45 kips at each location, which is an increase over the 40 kips from Reference 2.1.11. The system that is used in lieu of the system in Reference 2.1.11 will be designed and tested acceptably to withstand 45 kips in the same manner previously shown.

7.5.2 None of the loadings produce an uplift reaction. The PSC tie down system is more than capable of withstanding any unexpected hold down forces which may arise based on engineering judgment.

7.6 Lateral Restraint

7.6.1 In order to withstand the lateral forces, two corners of the Vertical Coiler Platform will be tied to the containment rail supports in the same manner as the USF's (see Section 6.3). The components used will be more than capable of withstanding the required lateral force calculated Attachment F.

END OF DESIGN

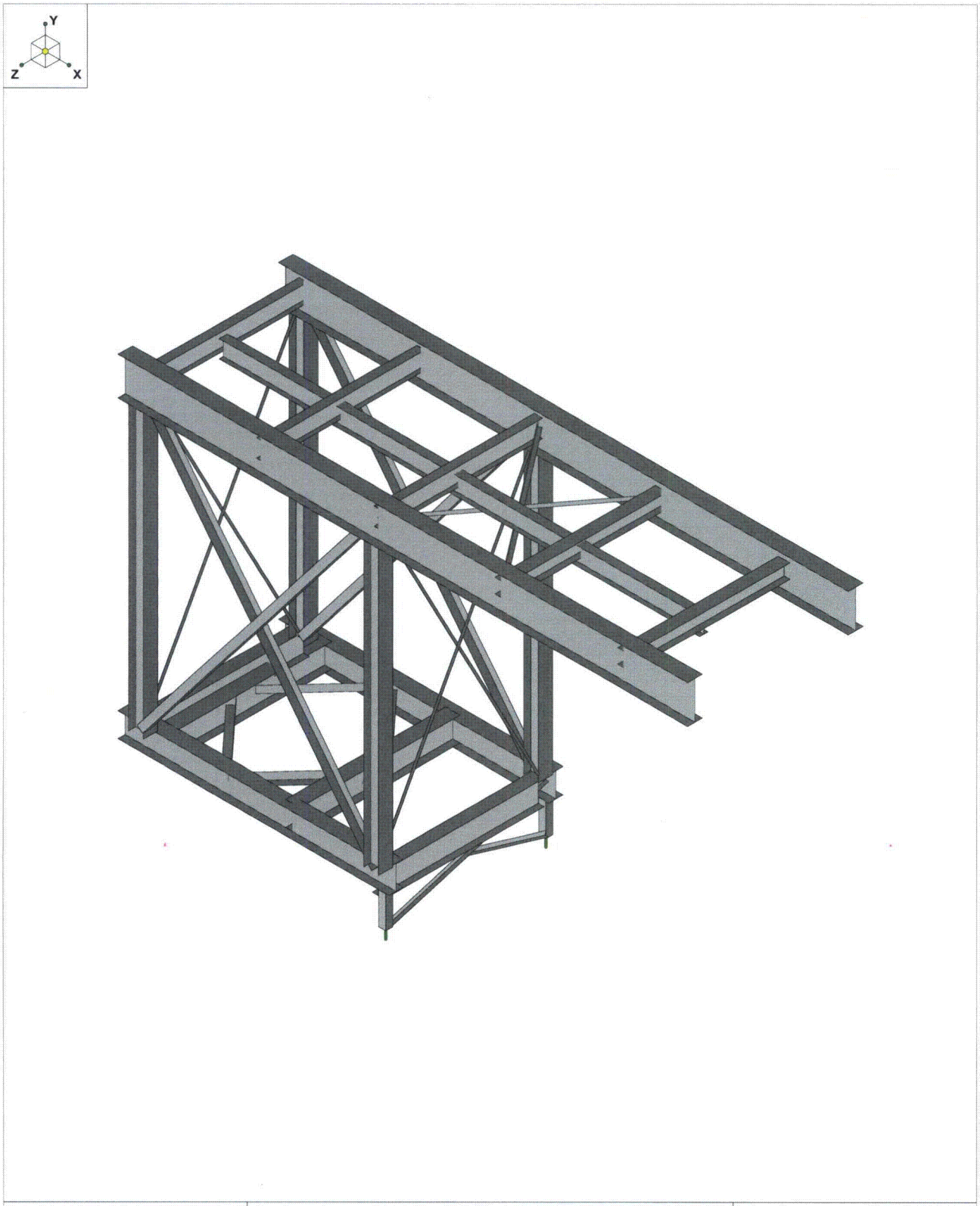

Precision Surveillance Corp	CR3 - BT2-60 & BT5-240 USF Design	
Brian Giometti		
CR-N1013-101		CR-N1013-101 BT2-60.BT5-240 U...

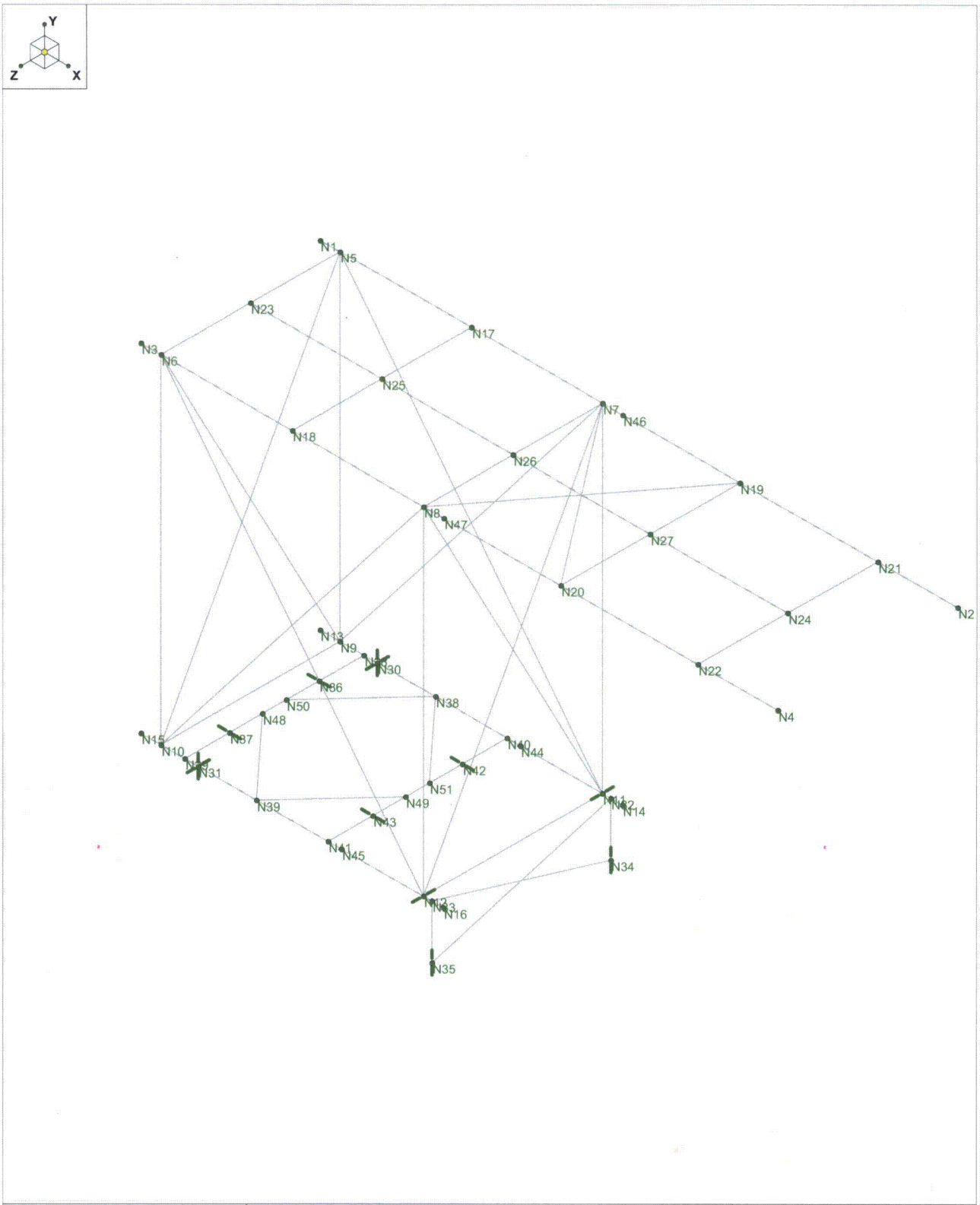

Precision Surveillance Corp	CR3 - BT2-60 & BT5-240 USF Design	
Brian Giometti		
CR-N1013-101		CR-N1013-101 BT2-60.BT5-240 U...

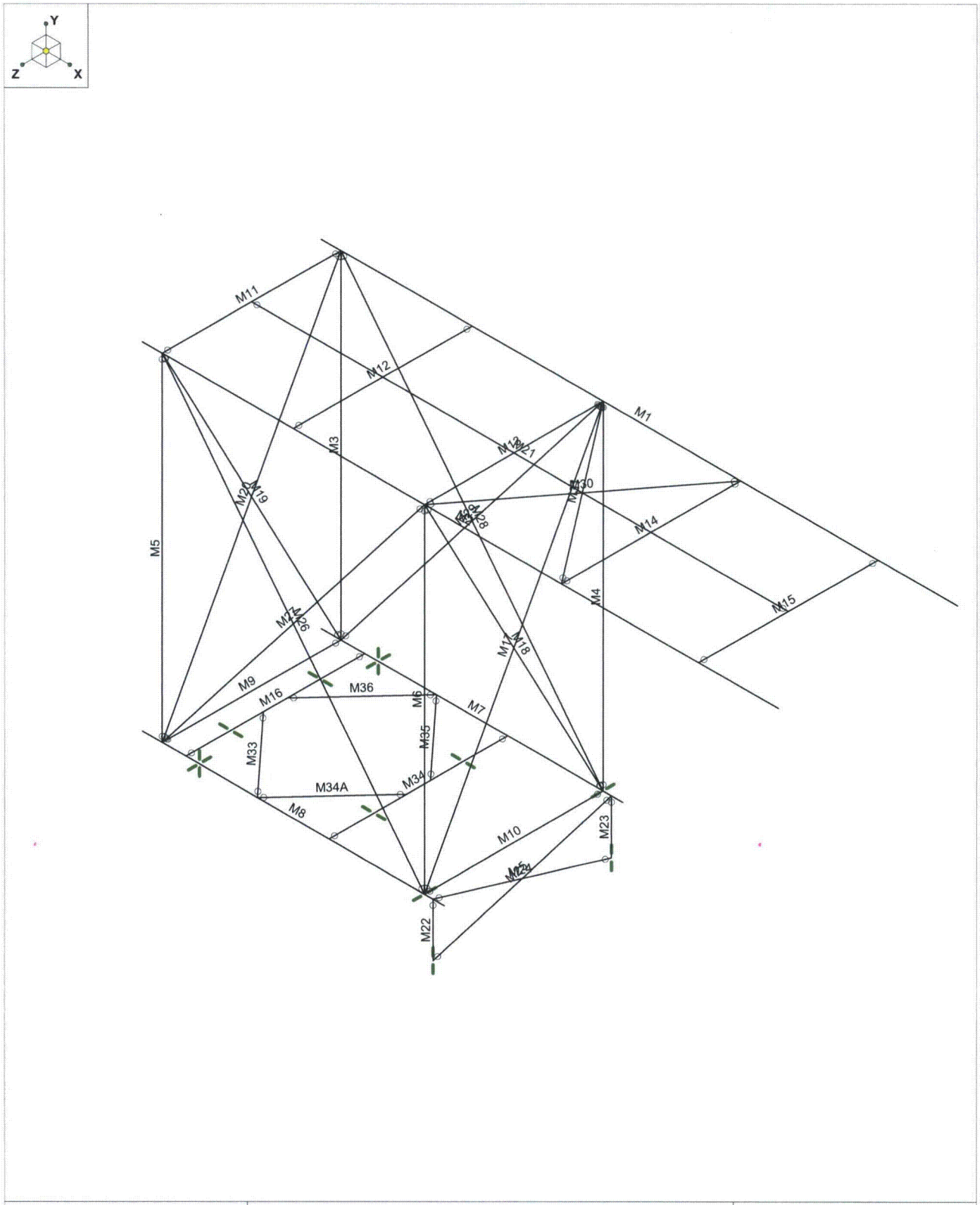

Precision Surveillance Corp	CR3 - BT2-60 & BT5-240 USF Design	
Brian Giometti		
CR-N1013-101		CR-N1013-101 BT2-60.BT5-240 U...

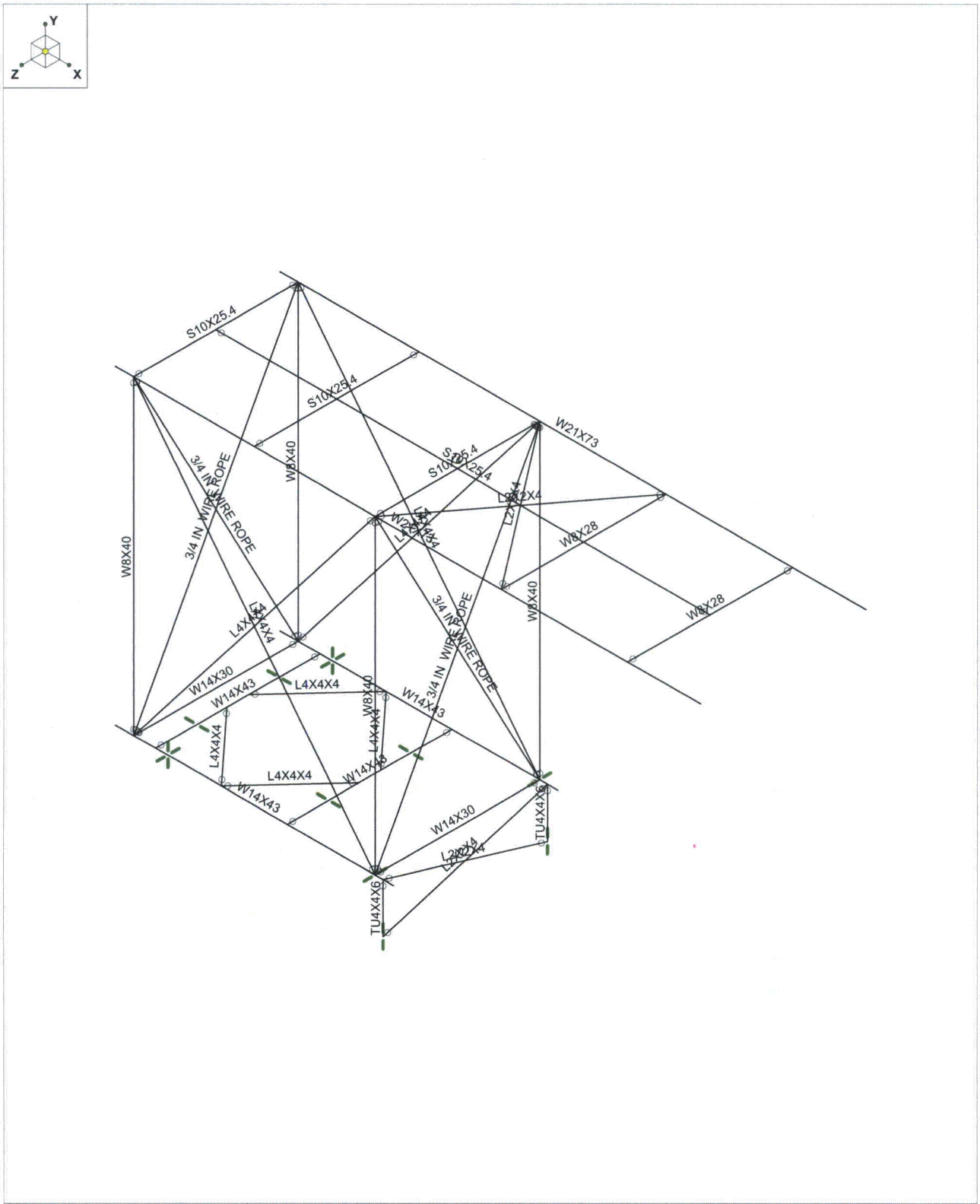

Precision Surveillance Corp	CR3 - BT2-60 & BT5-240 USF Design	
Brian Giometti		
CR-N1013-101		CR-N1013-101 BT2-60.BT5-240 U...

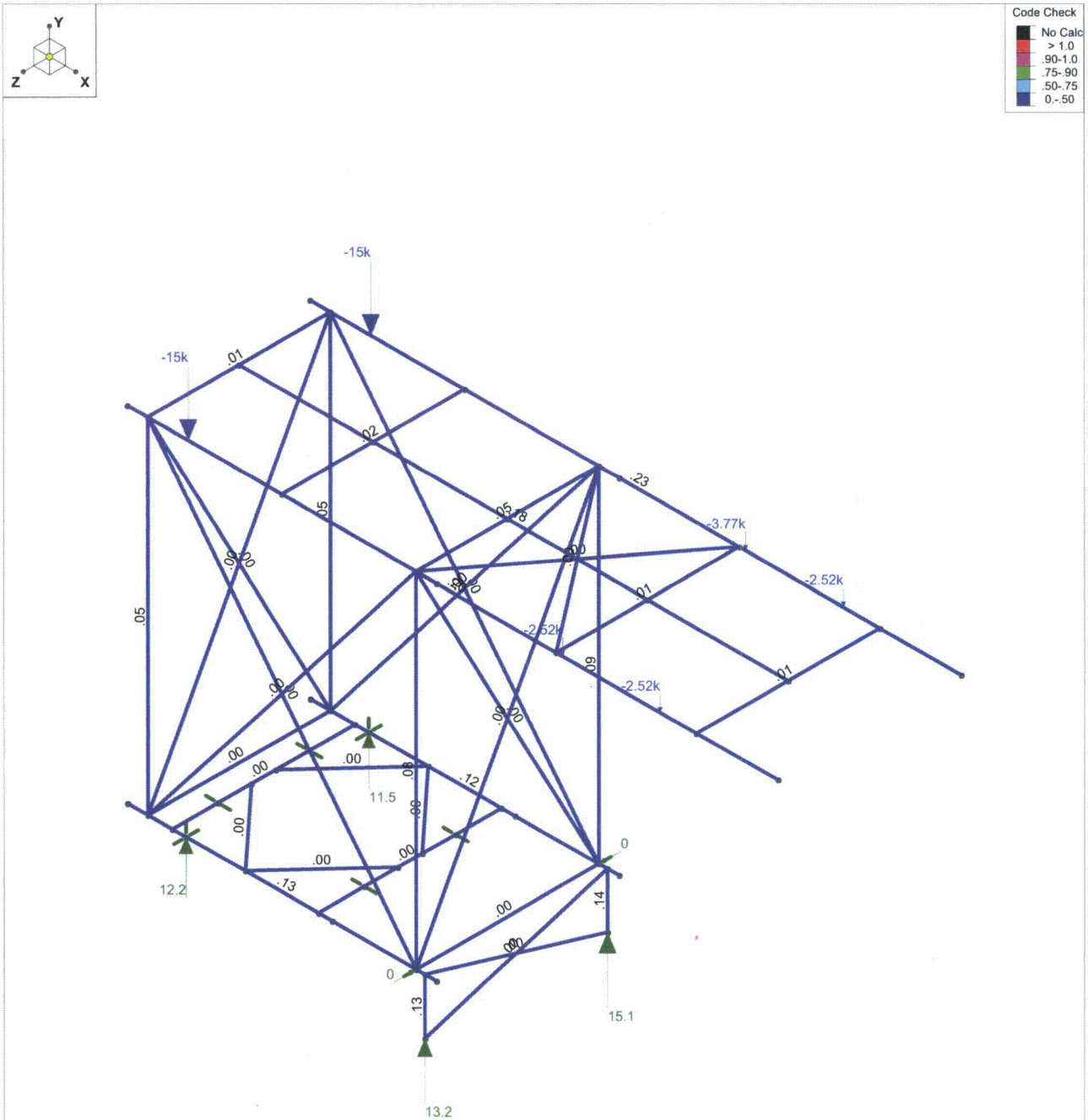

Member Code Checks Displayed
Loads: LC 1, DL+LL
Results for LC 1, DL+LL
Reaction units are k and k-ft

Precision Surveillance Corp	CR3 - BT2-60 & BT5-240 USF Design	
Brian Giometti		
CR-N1013-101		CR-N1013-101 BT2-60.BT5-240 U...

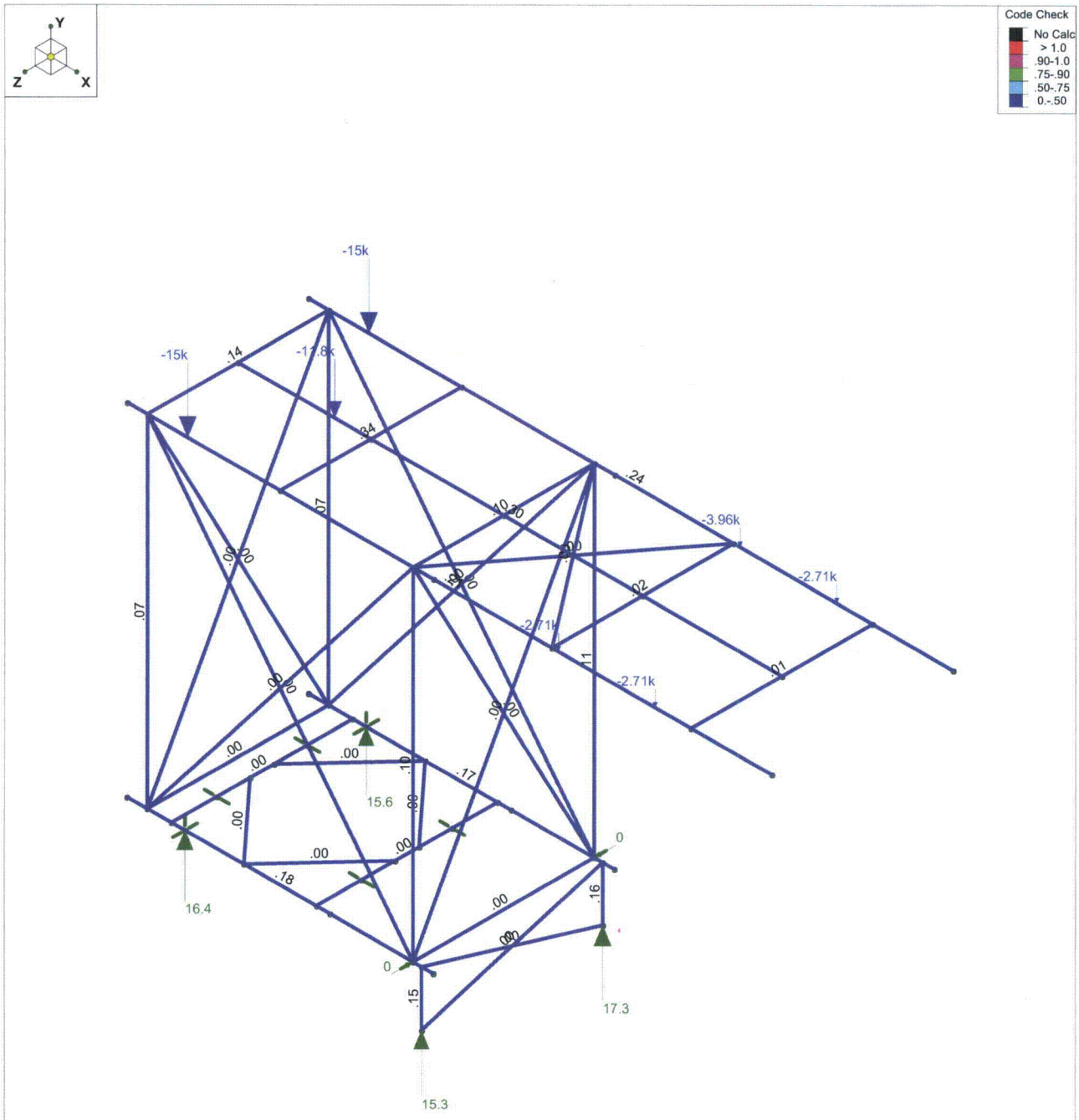

Member Code Checks Displayed
Loads: LC 2, DL+LL+OL1+OL3
Results for LC 2, DL+LL+OL1+OL3
Reaction units are k and k-ft

Precision Surveillance Corp	CR3 - BT2-60 & BT5-240 USF Design	
Brian Giometti		
CR-N1013-101		CR-N1013-101 BT2-60.BT5-240 U...

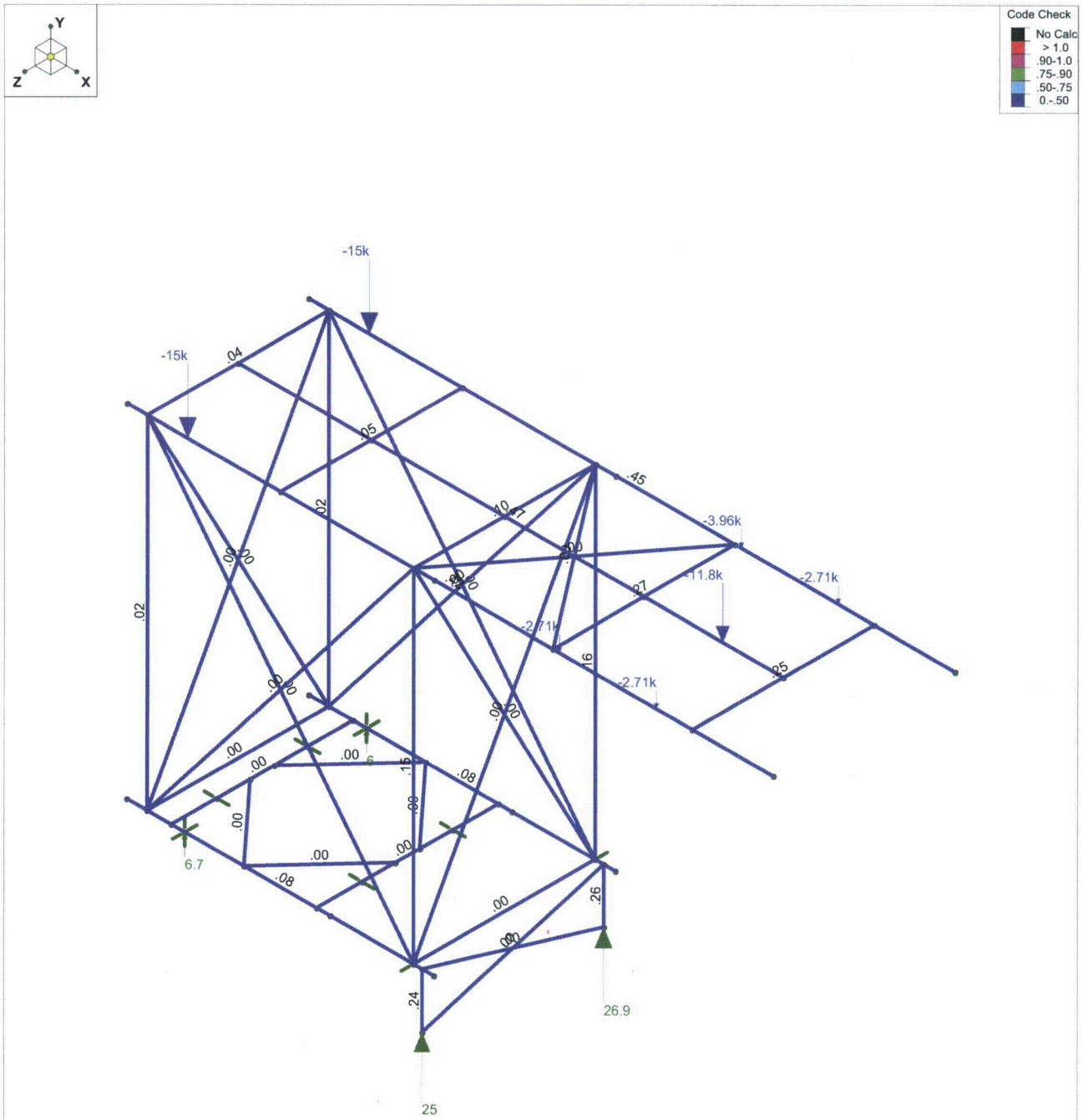

Member Code Checks Displayed
Loads: LC 3, DL+LL+OL2+OL3
Results for LC 3, DL+LL+OL2+OL3
Reaction units are k and k-ft

Precision Surveillance Corp	CR3 - BT2-60 & BT5-240 USF Design	
Brian Giometti		
CR-N1013-101		CR-N1013-101 BT2-60.BT5-240 U...

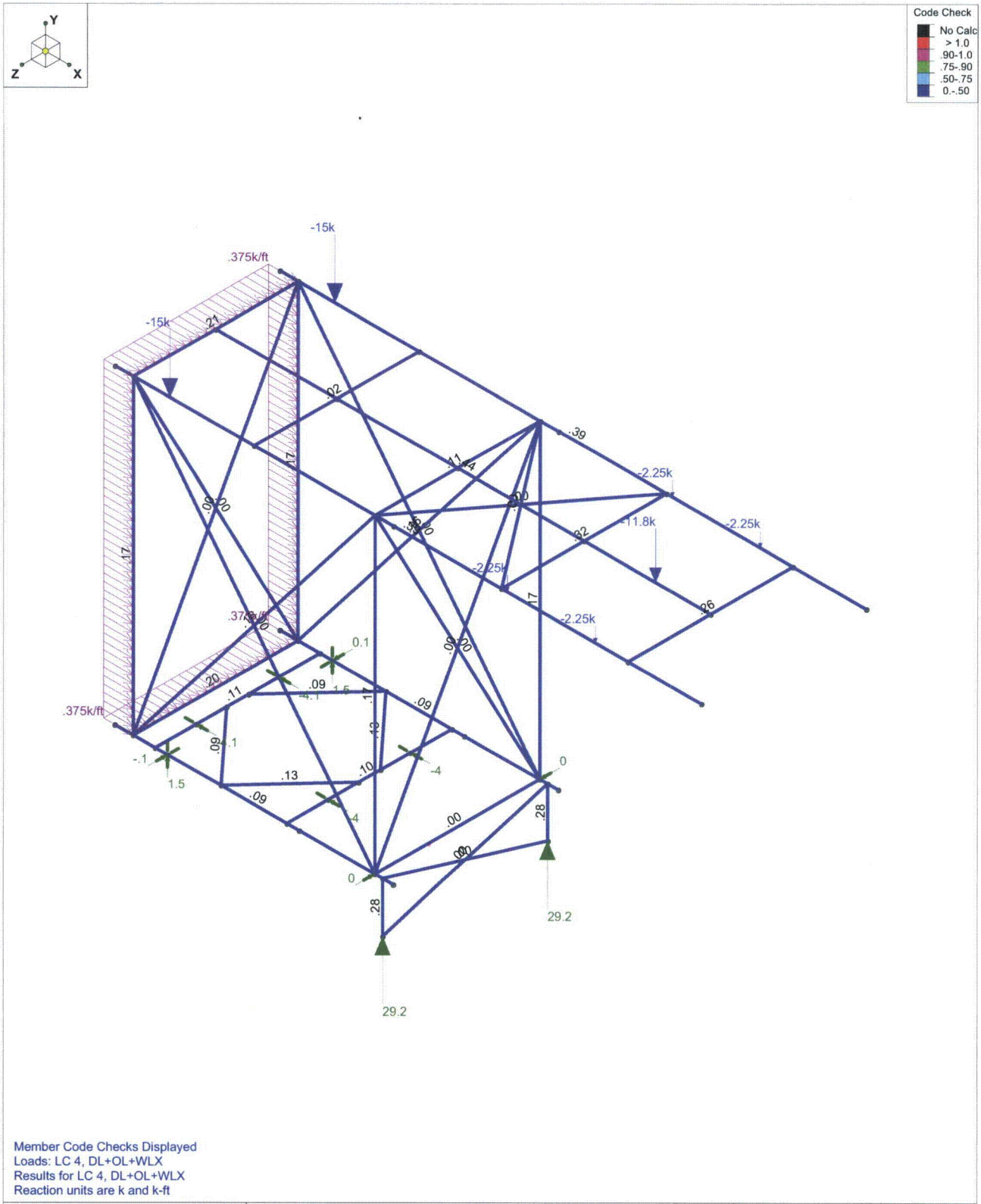

Member Code Checks Displayed
Loads: LC 4, DL+OL+WLX
Results for LC 4, DL+OL+WLX
Reaction units are k and k-ft

Precision Surveillance Corp	CR3 - BT2-60 & BT5-240 USF Design	
Brian Giometti		
CR-N1013-101		CR-N1013-101 BT2-60.BT5-240 U...

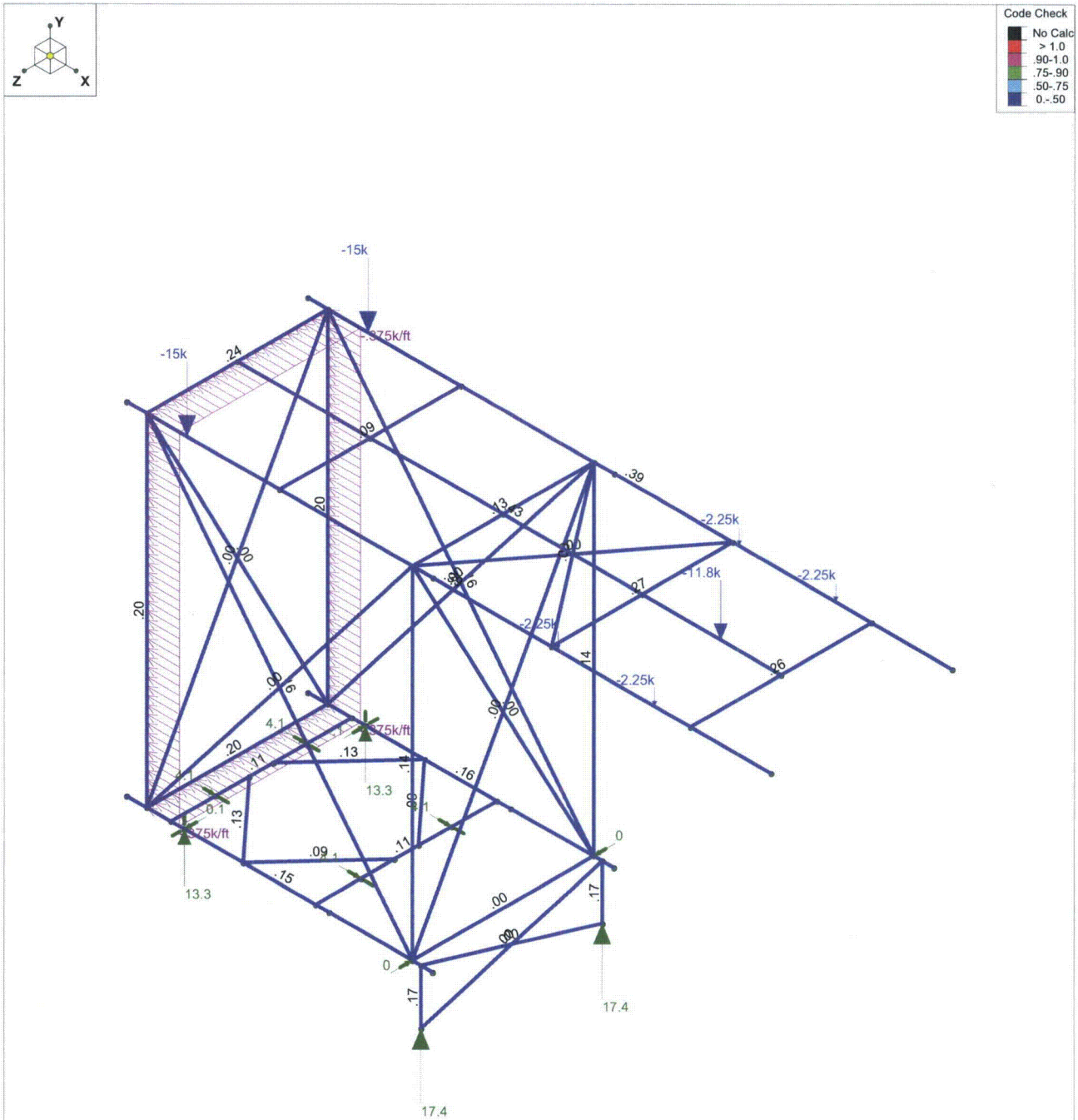

Member Code Checks Displayed
Loads: LC 5, DL+OL-WLX
Results for LC 5, DL+OL-WLX
Reaction units are k and k-ft

Precision Surveillance Corp	CR3 - BT2-60 & BT5-240 USF Design	
Brian Giometti		
CR-N1013-101		CR-N1013-101 BT2-60.BT5-240 U...

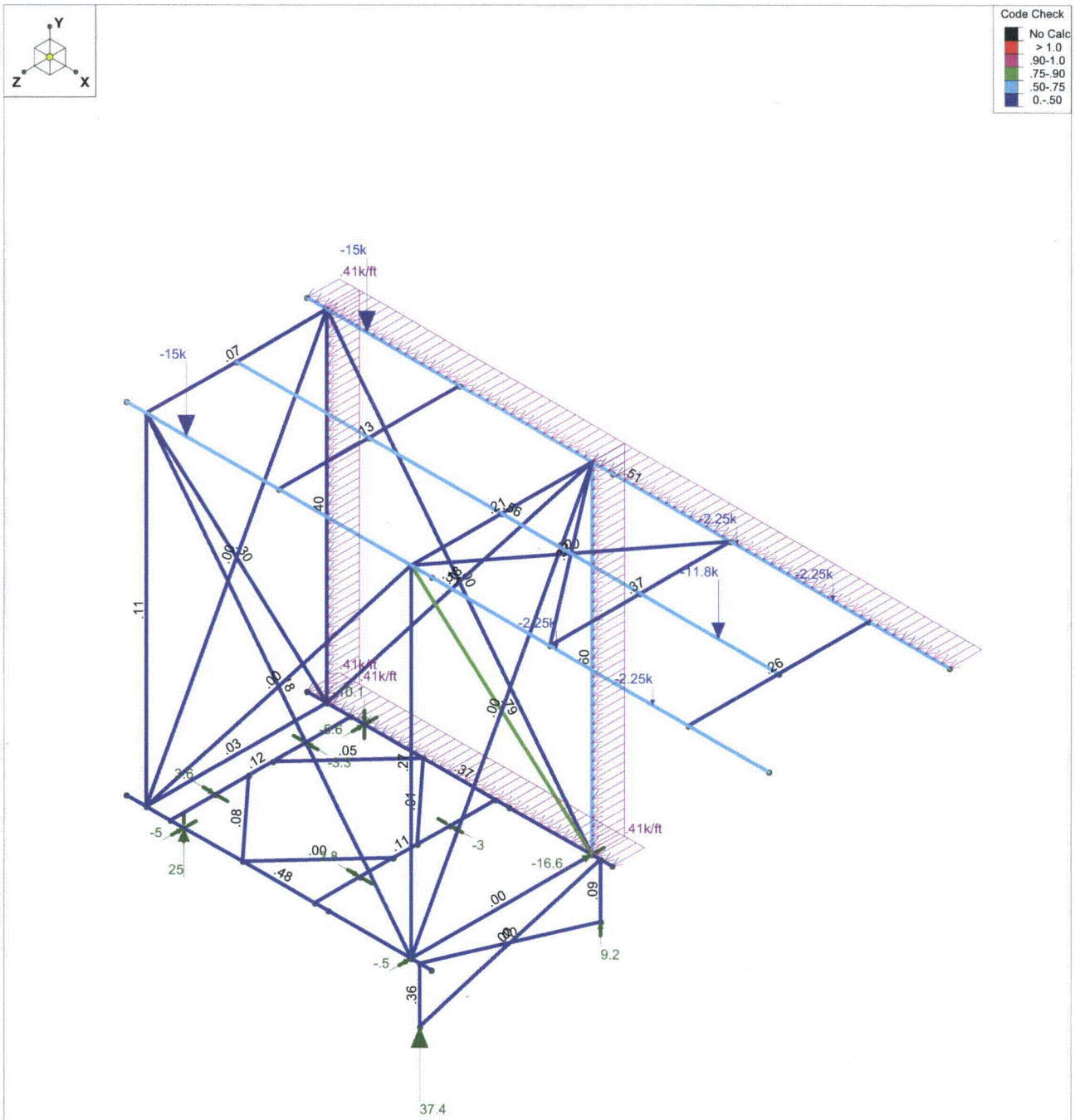

Member Code Checks Displayed
Loads: LC 6, DL+OL+WLZ
Results for LC 6, DL+OL+WLZ
Reaction units are k and k-ft

Precision Surveillance Corp	CR3 - BT2-60 & BT5-240 USF Design	
Brian Giometti		
CR-N1013-101		CR-N1013-101 BT2-60.BT5-240 U...

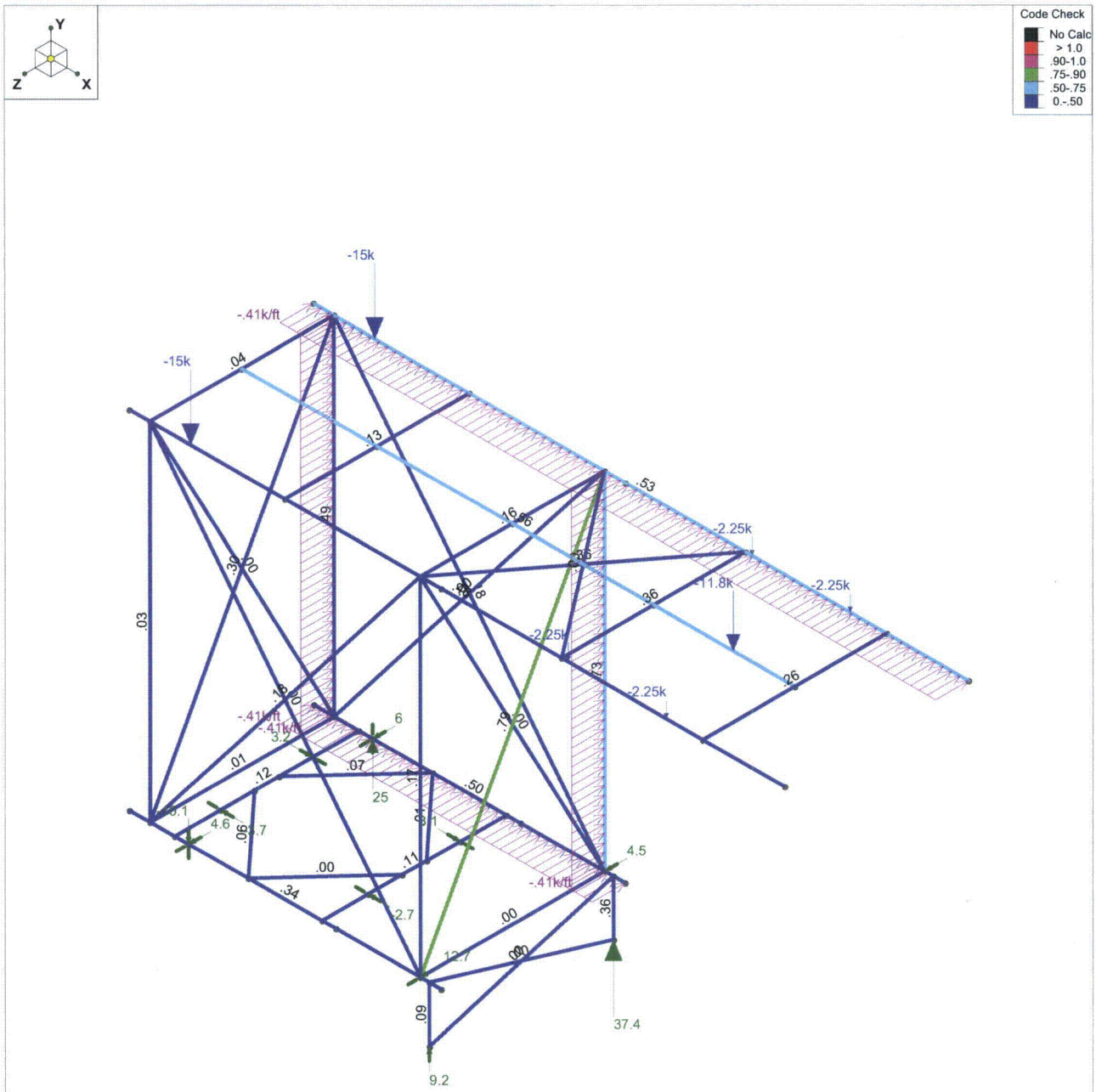

Member Code Checks Displayed
Loads: LC 7, DL+OL-WLZ
Results for LC 7, DL+OL-WLZ
Reaction units are k and k-ft

Precision Surveillance Corp	CR3 - BT2-60 & BT5-240 USF Design	
Brian Giometti		
CR-N1013-101		CR-N1013-101 BT2-60.BT5-240 U...

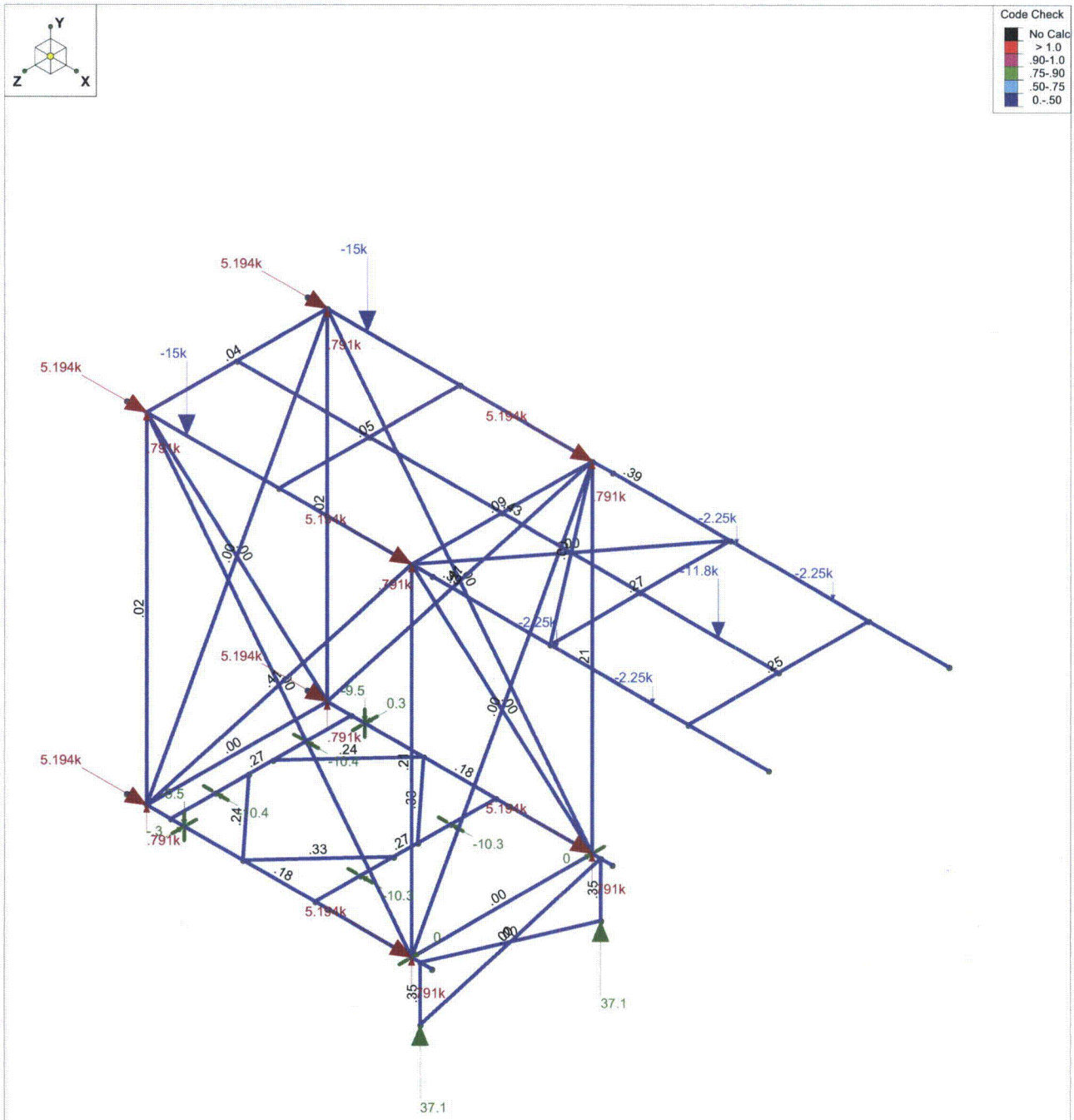

Member Code Checks Displayed
Loads: LC 8, DL+OL+0.7(ELX+ELY)
Results for LC 8, DL+OL+0.7(ELX+ELY)
Reaction units are k and k-ft

Precision Surveillance Corp	CR3 - BT2-60 & BT5-240 USF Design	
Brian Giometti		
CR-N1013-101		CR-N1013-101 BT2-60.BT5-240 U...

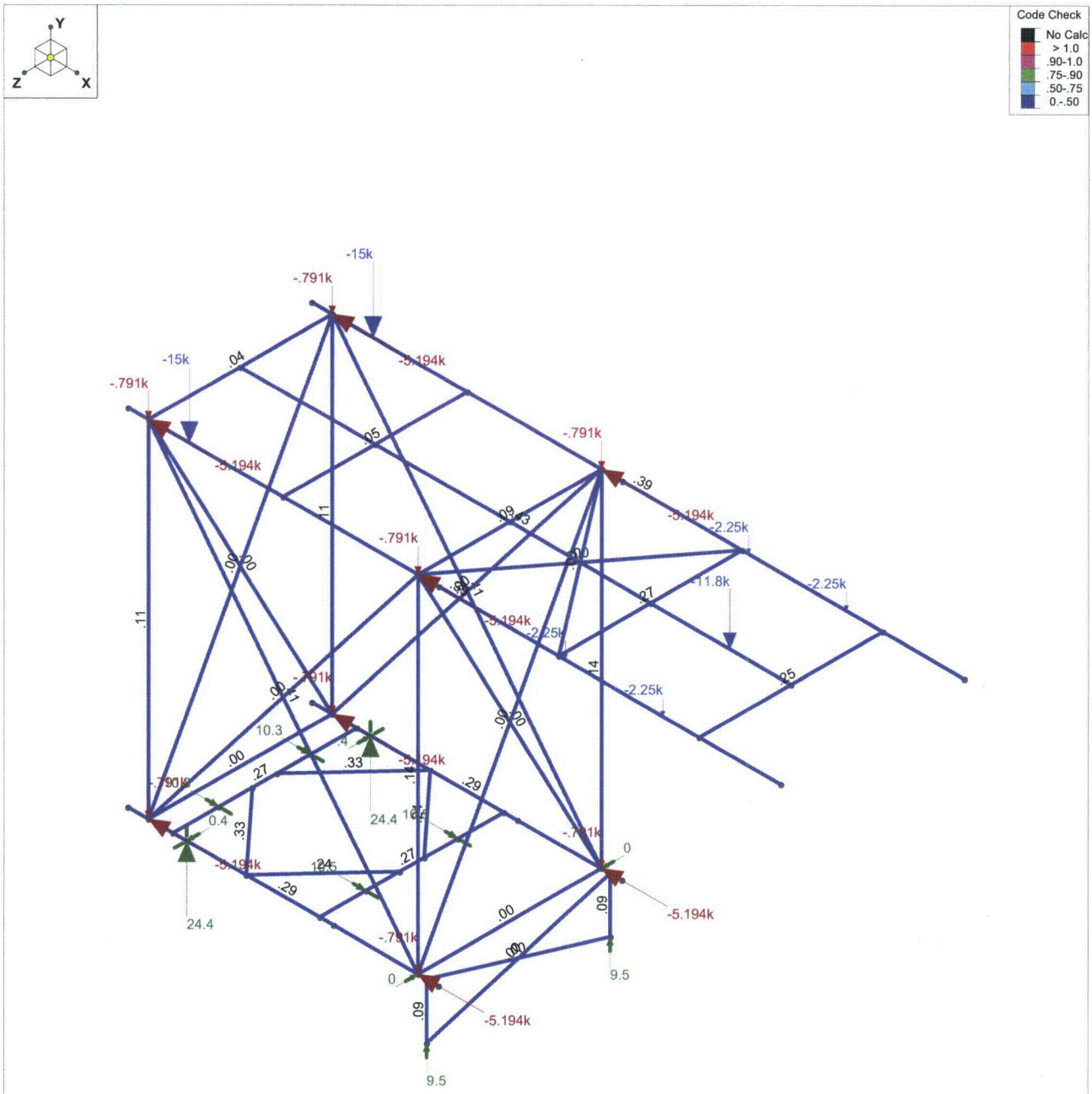

Member Code Checks Displayed
Loads: LC 9, DL+OL-0.7(ELX+ELY)
Results for LC 9, DL+OL-0.7(ELX+ELY)
Reaction units are k and k-ft

Precision Surveillance Corp	CR3 - BT2-60 & BT5-240 USF Design	
Brian Giometti		
CR-N1013-101		CR-N1013-101 BT2-60.BT5-240 U...

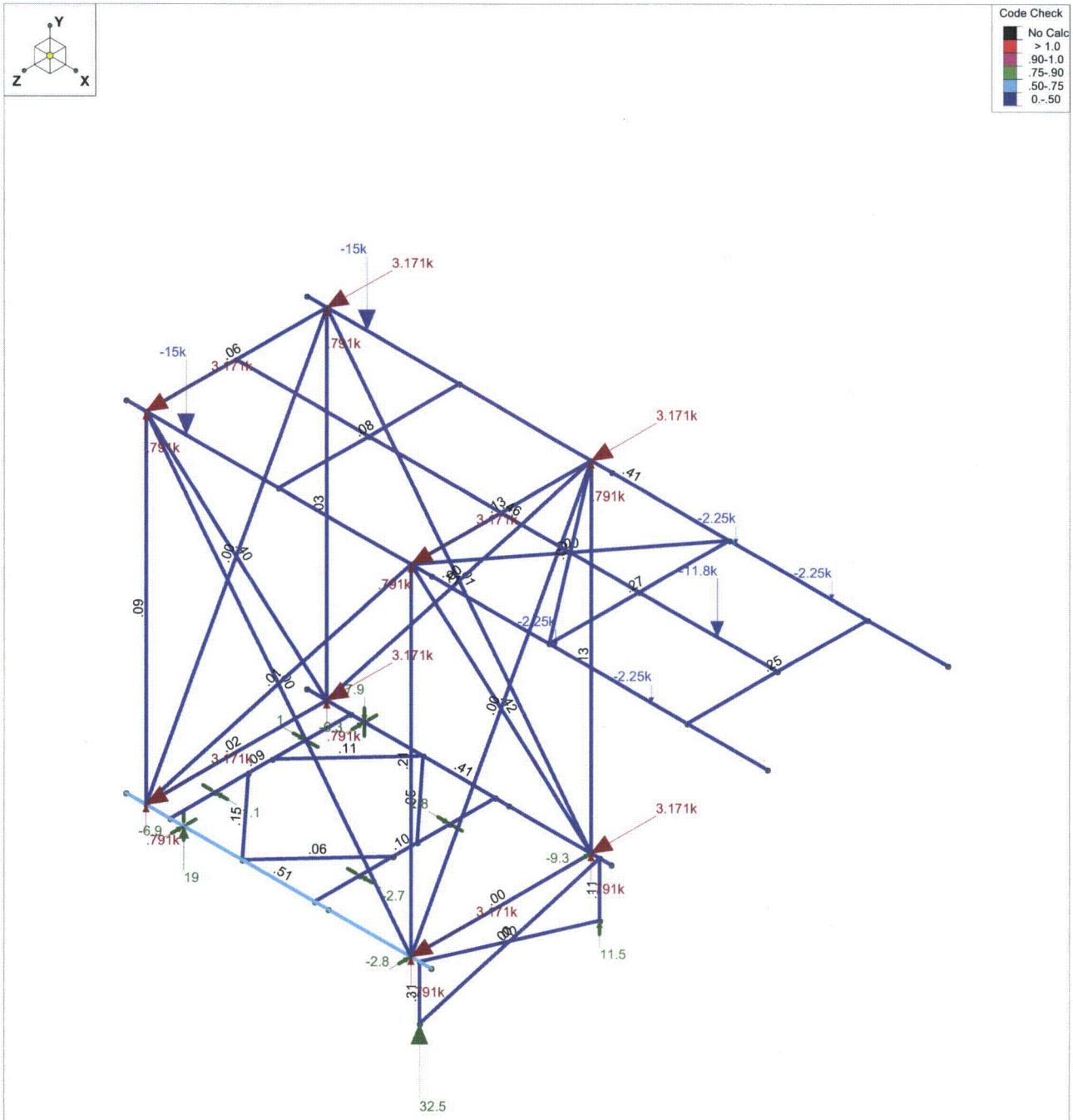

Member Code Checks Displayed
Loads: LC 10, DL+OL+0.7(ELZ+ELY)
Results for LC 10, DL+OL+0.7(ELZ+ELY)
Reaction units are k and k-ft

Precision Surveillance Corp	CR3 - BT2-60 & BT5-240 USF Design	
Brian Giometti		
CR-N1013-101		CR-N1013-101 BT2-60.BT5-240 U...

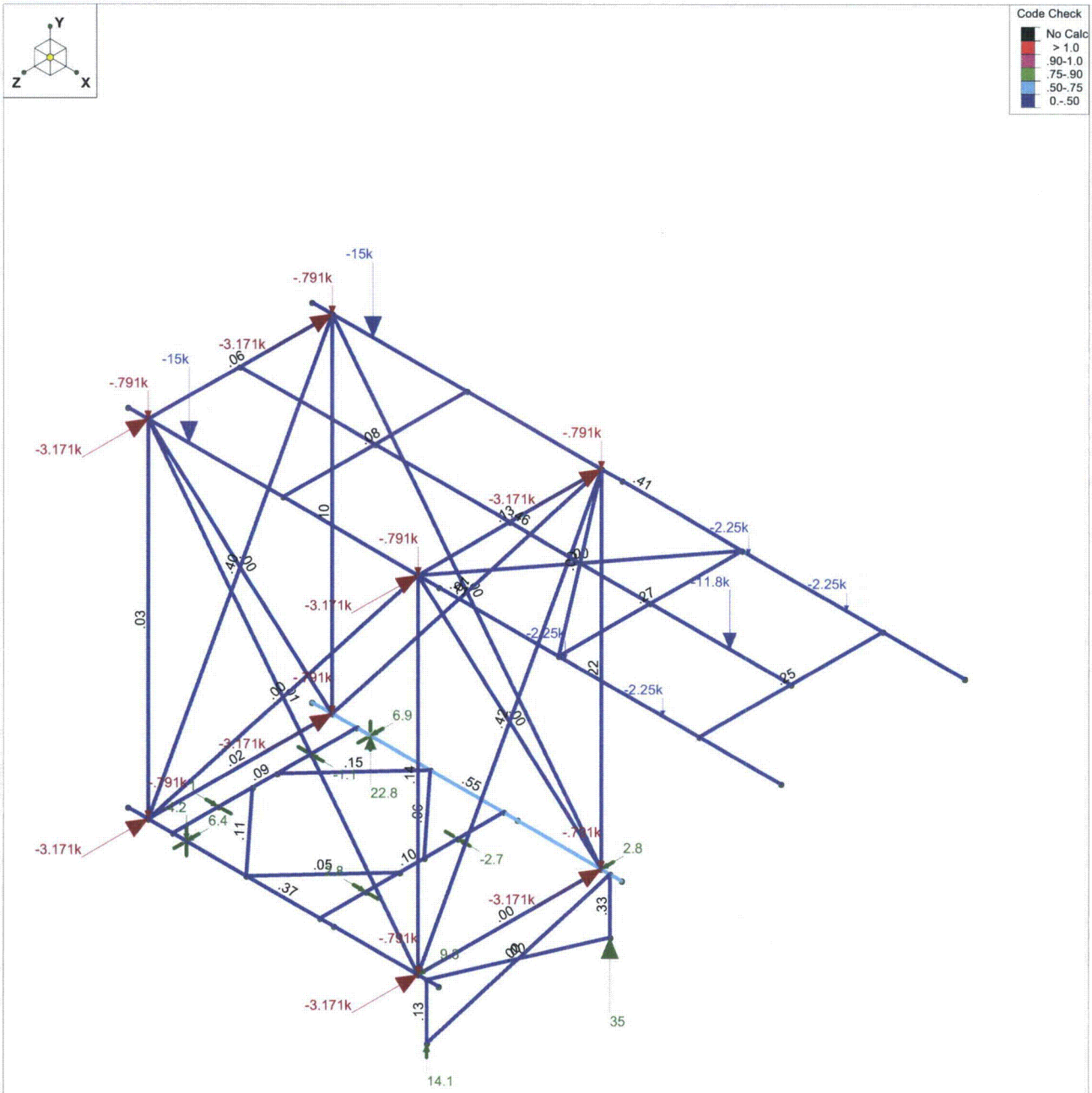

Member Code Checks Displayed
Loads: LC 11, DL+OL-0.7(ELZ+ELY)
Results for LC 11, DL+OL-0.7(ELZ+ELY)
Reaction units are k and k-ft

Precision Surveillance Corp	CR3 - BT2-60 & BT5-240 USF Design	
Brian Giometti		
CR-N1013-101		CR-N1013-101 BT2-60.BT5-240 U...

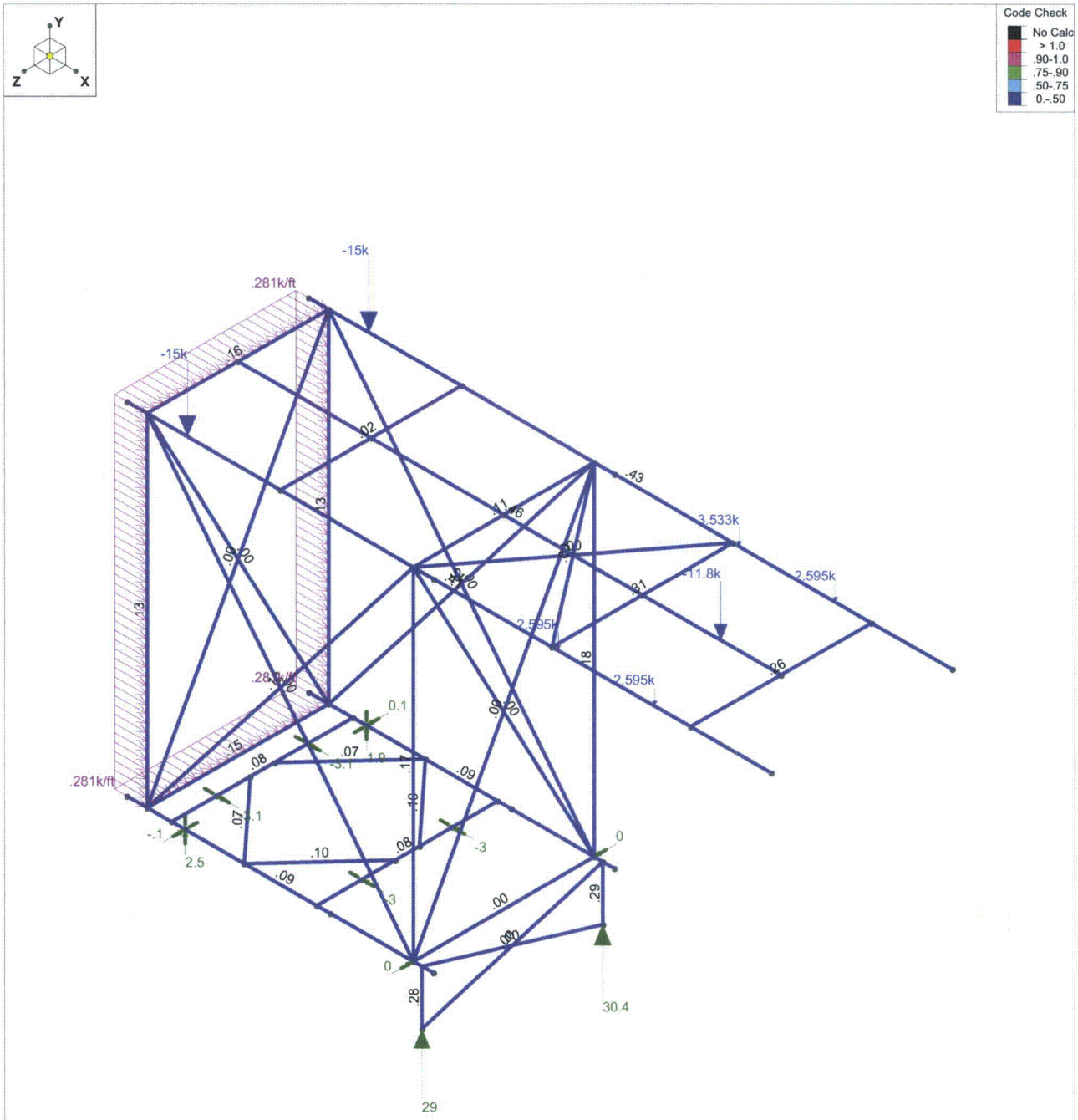

Member Code Checks Displayed
Loads: LC 12, DL+0.75LL+OL+0.75WLX
Results for LC 12, DL+0.75LL+OL+0.75WLX
Reaction units are k and k-ft

Precision Surveillance Corp	CR3 - BT2-60 & BT5-240 USF Design	
Brian Giometti		
CR-N1013-101		CR-N1013-101 BT2-60.BT5-240 U...

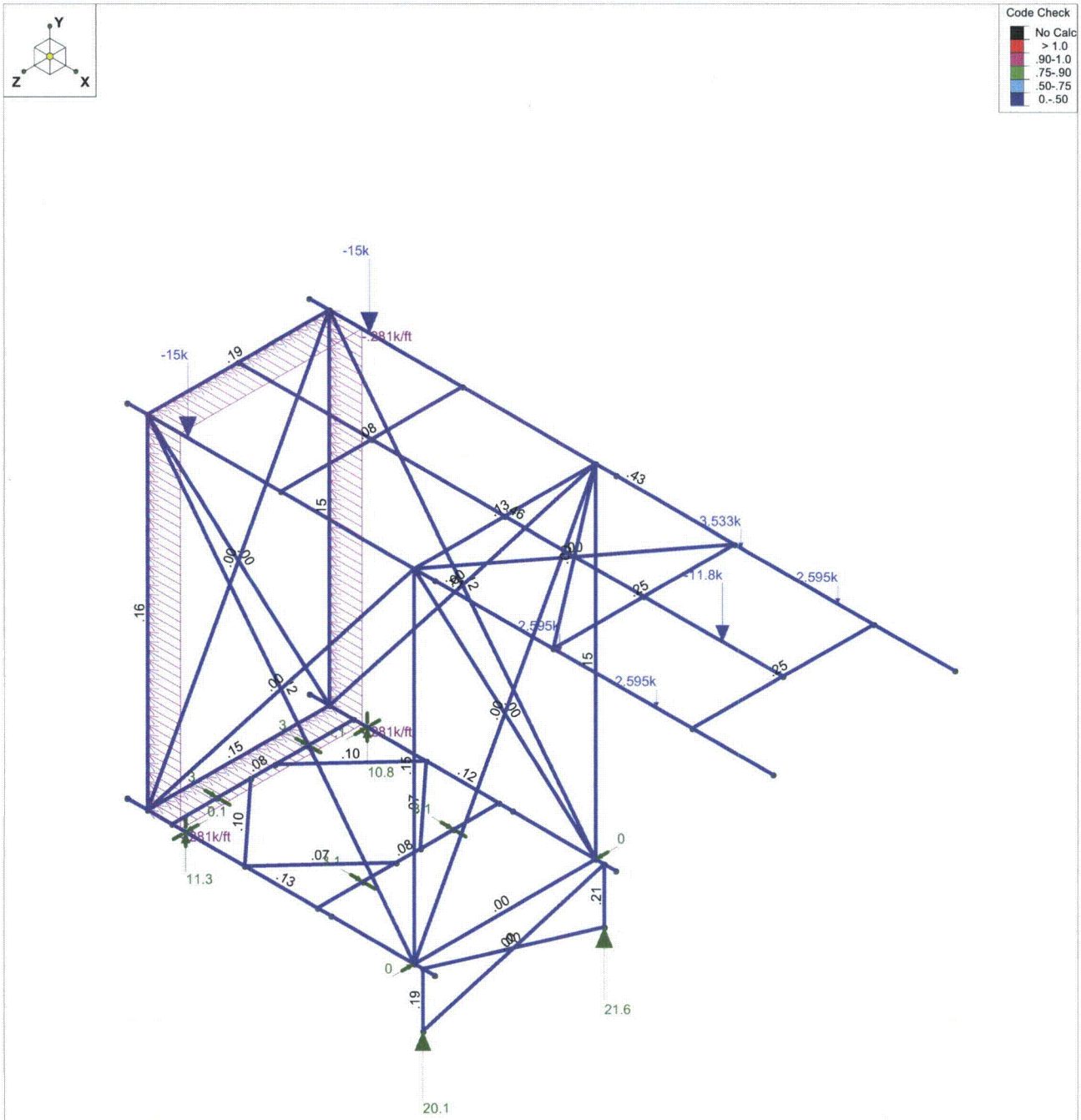

Member Code Checks Displayed
Loads: LC 13, DL+0.75LL+OL-0.75WLX
Results for LC 13, DL+0.75LL+OL-0.75WLX
Reaction units are k and k-ft

Precision Surveillance Corp	CR3 - BT2-60 & BT5-240 USF Design	
Brian Giometti		
CR-N1013-101		CR-N1013-101 BT2-60.BT5-240 U...

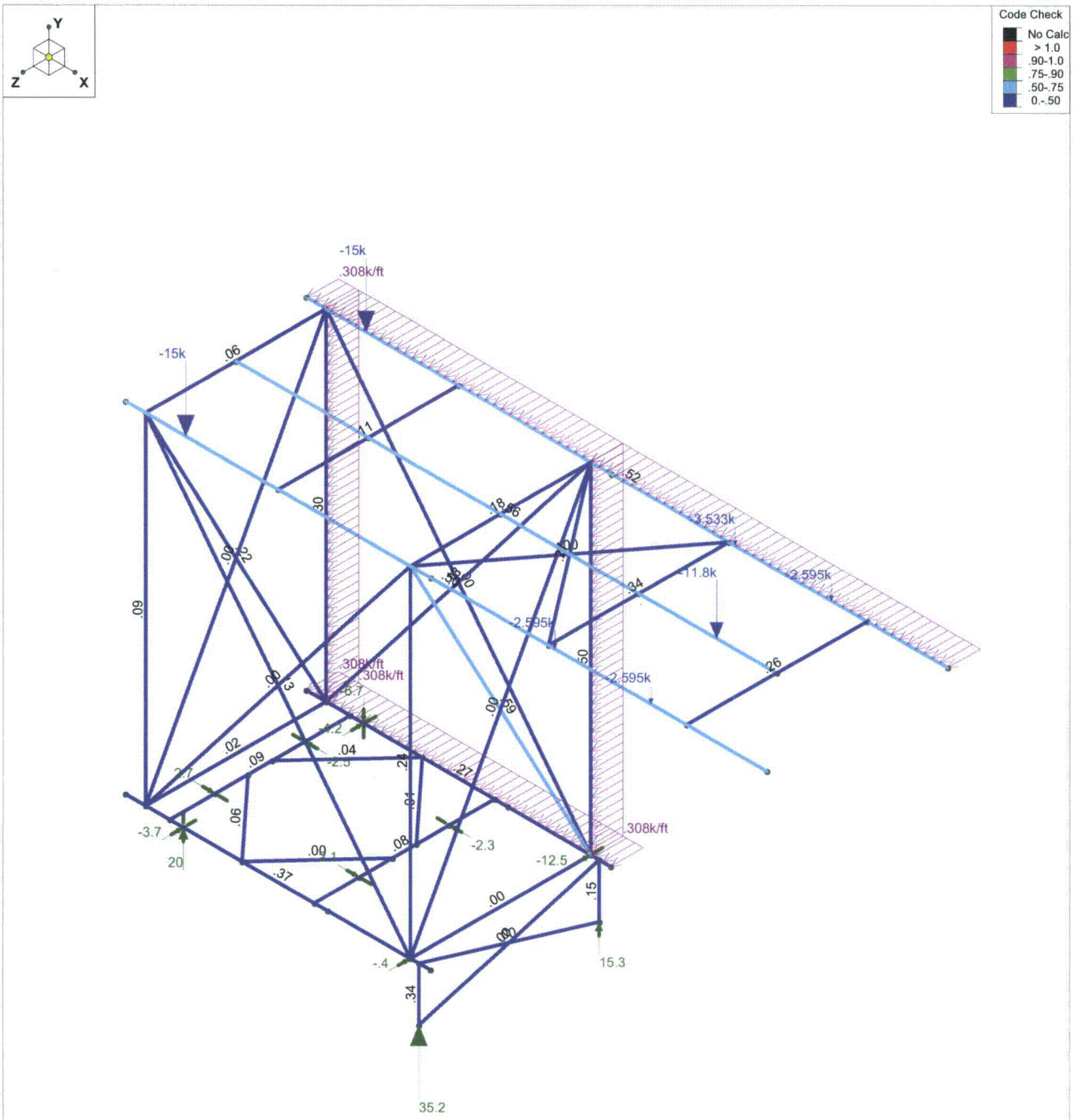

Member Code Checks Displayed
Loads: LC 14, DL+0.75LL+OL+0.75WLZ
Results for LC 14, DL+0.75LL+OL+0.75WLZ
Reaction units are k and k-ft

Precision Surveillance Corp	CR3 - BT2-60 & BT5-240 USF Design	
Brian Giometti		
CR-N1013-101		CR-N1013-101 BT2-60.BT5-240 U...

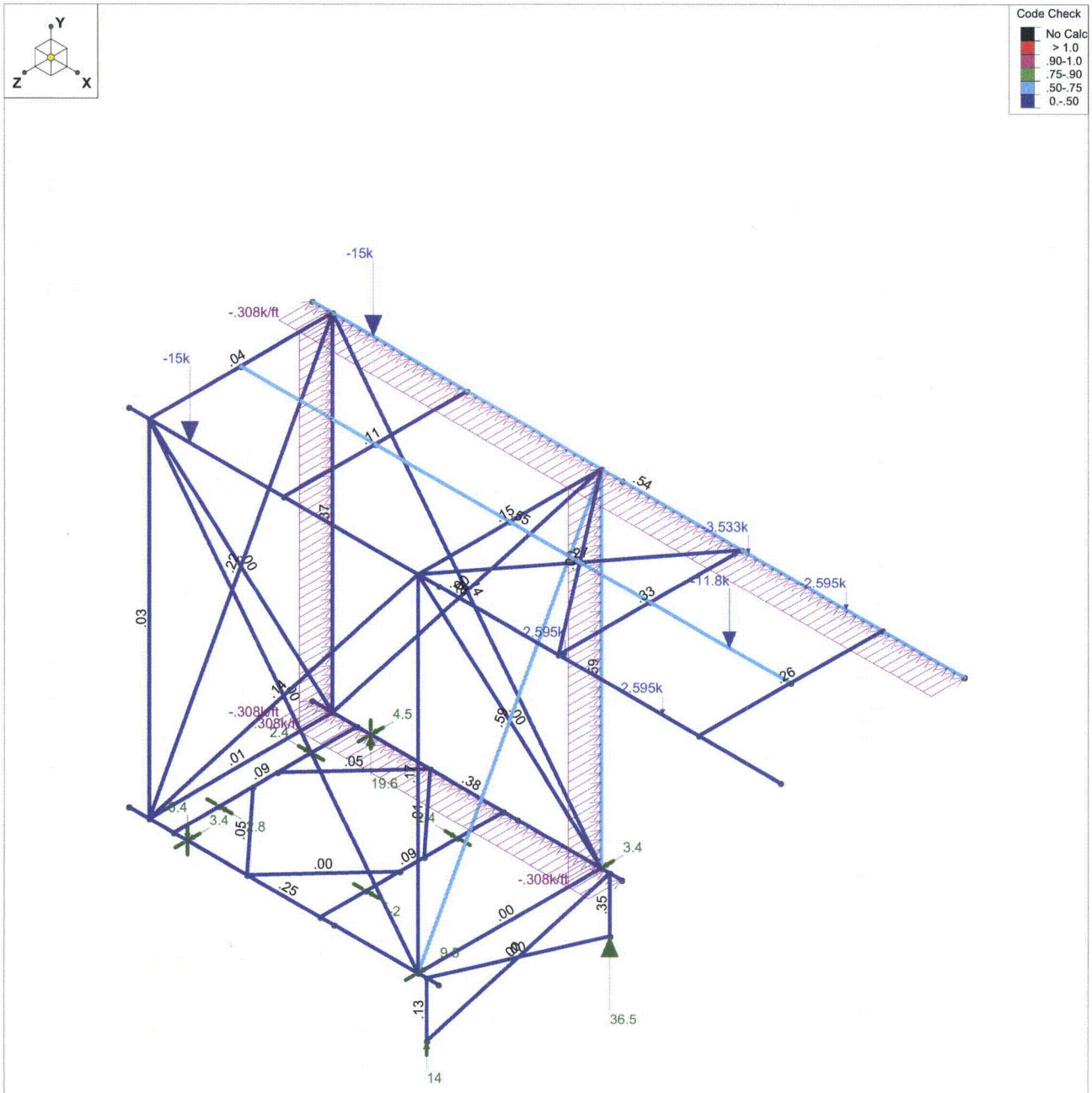

Member Code Checks Displayed
Loads: LC 15, DL+0.75LL+OL-0.75WLZ
Results for LC 15, DL+0.75LL+OL-0.75WLZ
Reaction units are k and k-ft

Precision Surveillance Corp	CR3 - BT2-60 & BT5-240 USF Design	
Brian Giometti		
CR-N1013-101		CR-N1013-101 BT2-60.BT5-240 U...

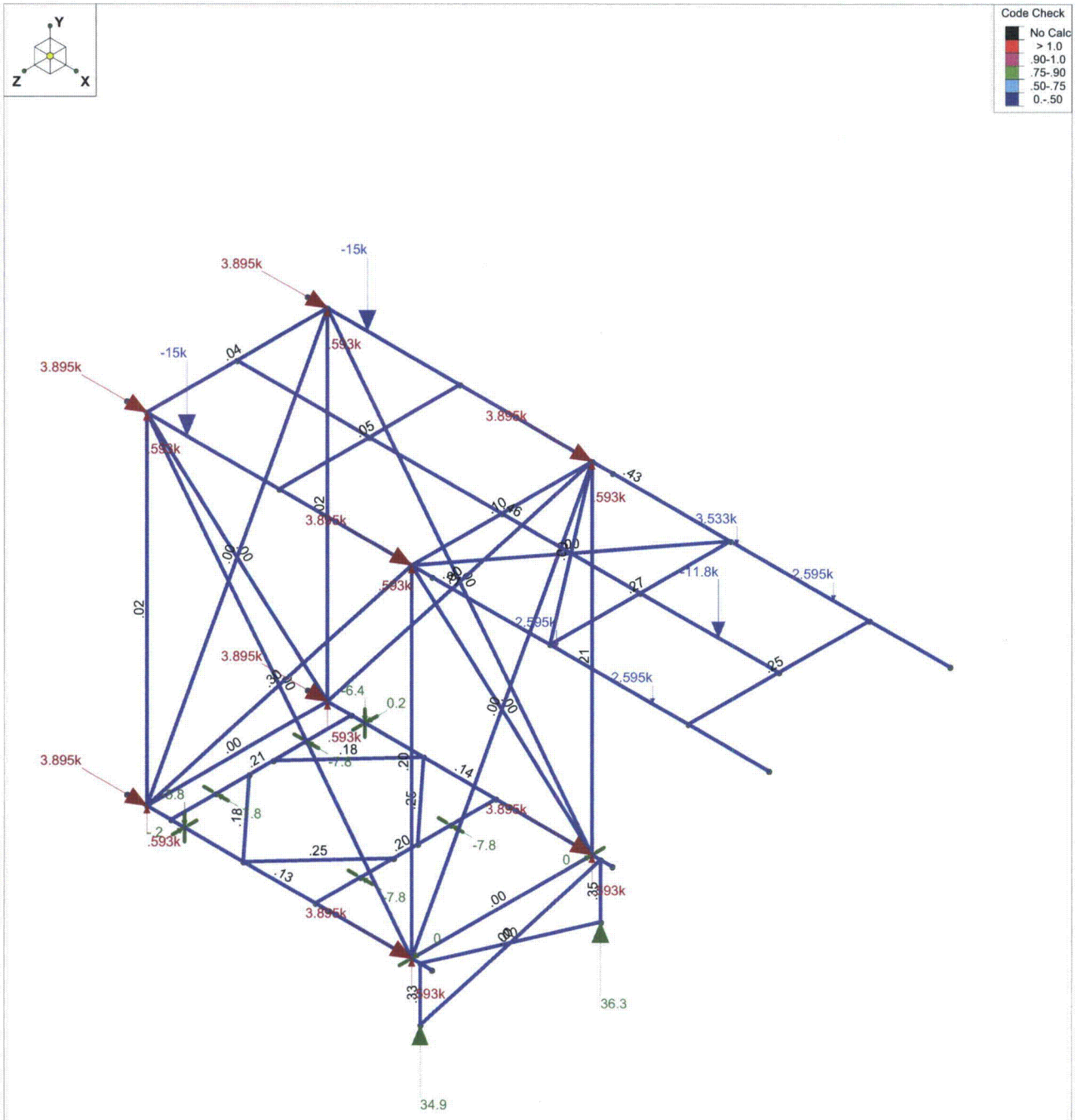

Member Code Checks Displayed
Loads: LC 16, DL+0.75LL+OL+0.75(0.7ELX+0.7ELY)
Results for LC 16, DL+0.75LL+OL+0.75(0.7ELX+0.7ELY)
Reaction units are k and k-ft

Precision Surveillance Corp	CR3 - BT2-60 & BT5-240 USF Design	
Brian Giometti		
CR-N1013-101		CR-N1013-101 BT2-60.BT5-240 U...

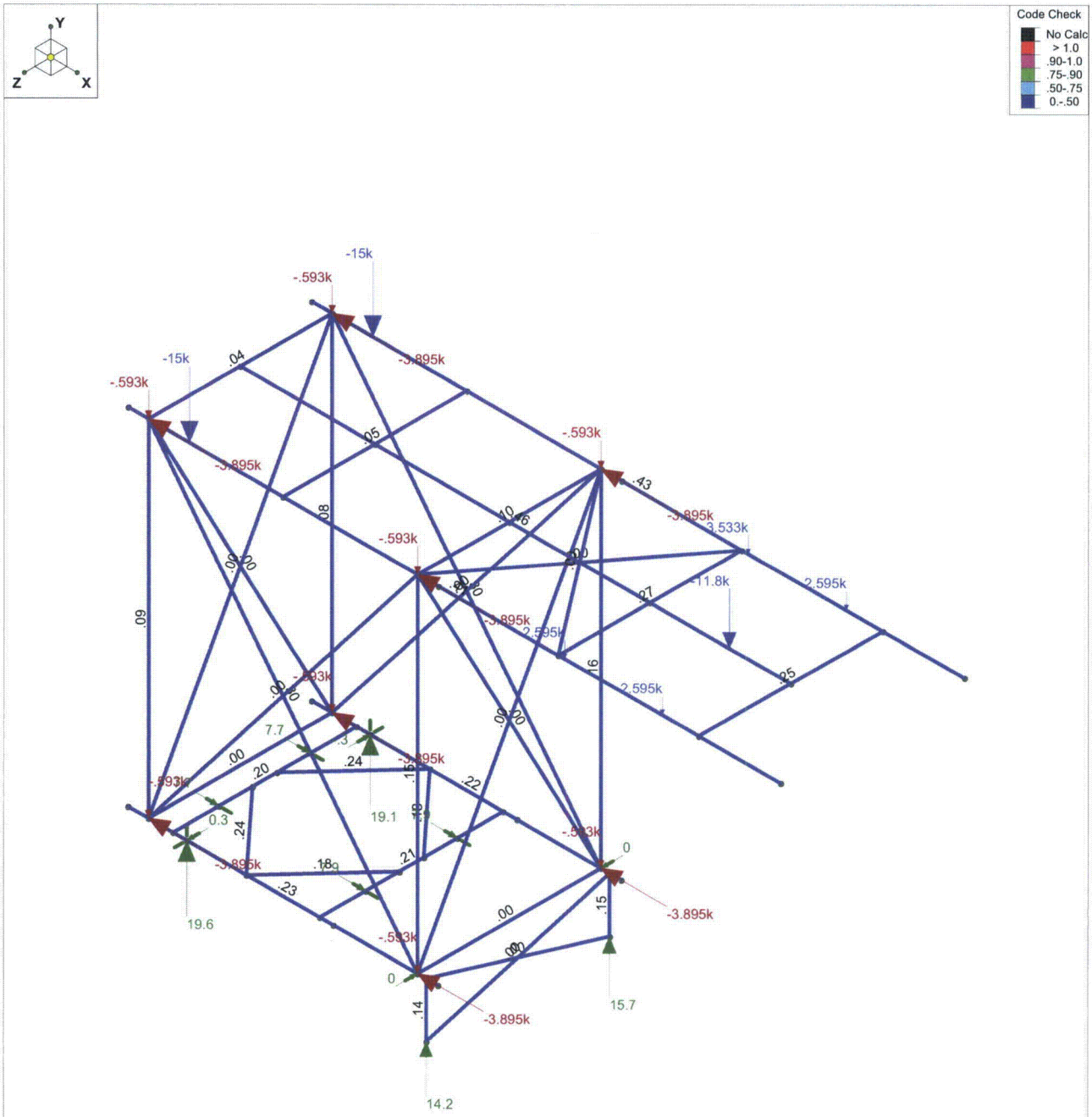

Member Code Checks Displayed
Loads: LC 17, DL+0.75LL+OL-0.75(0.7ELX+0.7ELY)
Results for LC 17, DL+0.75LL+OL-0.75(0.7ELX+0.7ELY)
Reaction units are k and k-ft

Precision Surveillance Corp	CR3 - BT2-60 & BT5-240 USF Design	
Brian Giometti		
CR-N1013-101		CR-N1013-101 BT2-60.BT5-240 U...

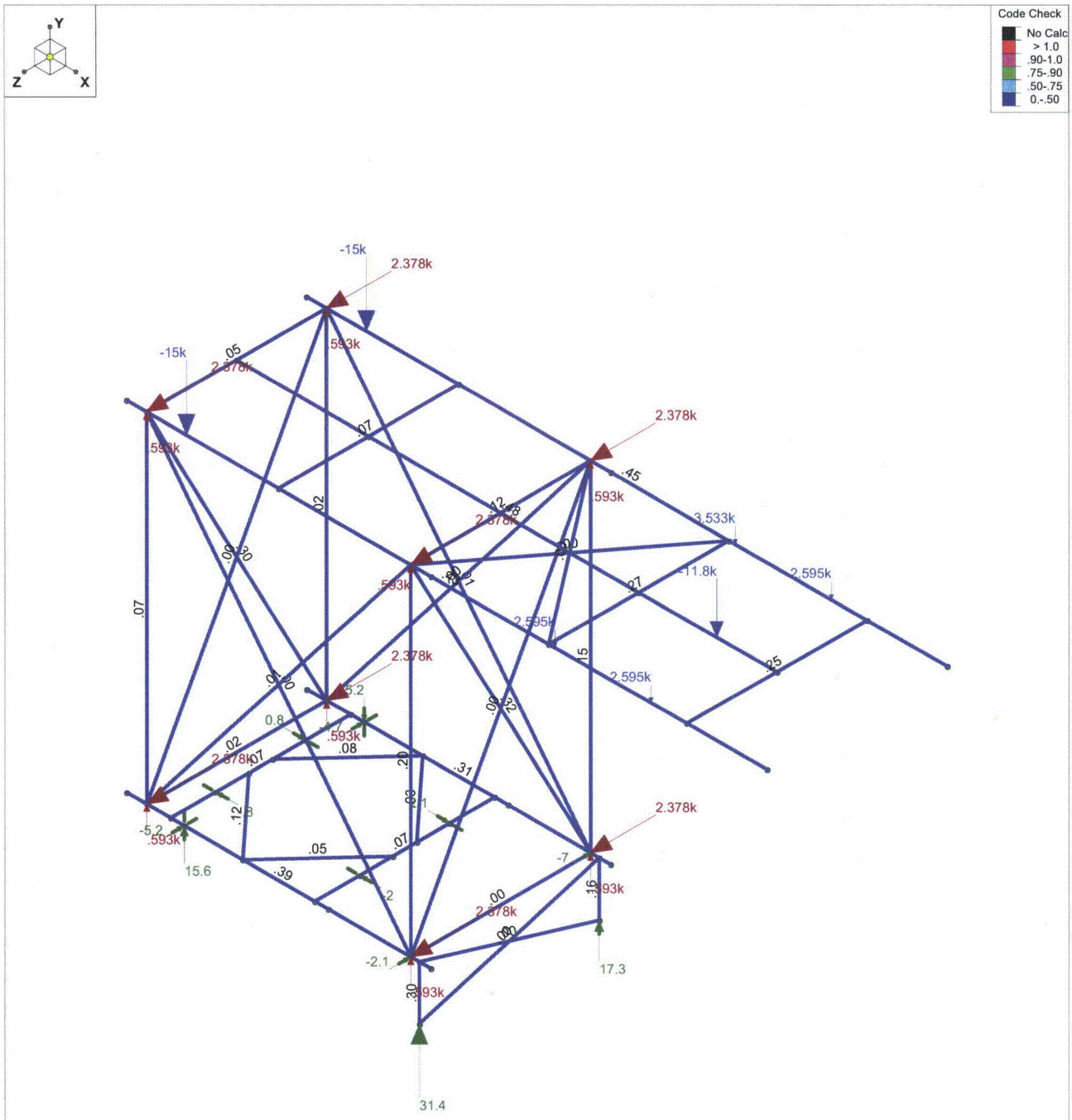

Member Code Checks Displayed
Loads: LC 18, DL+0.75LL+OL+0.75(0.7ELZ+0.7ELY)
Results for LC 18, DL+0.75LL+OL+0.75(0.7ELZ+0.7ELY)
Reaction units are k and k-ft

Precision Surveillance Corp	CR3 - BT2-60 & BT5-240 USF Design	
Brian Giometti		
CR-N1013-101		CR-N1013-101 BT2-60.BT5-240 U...

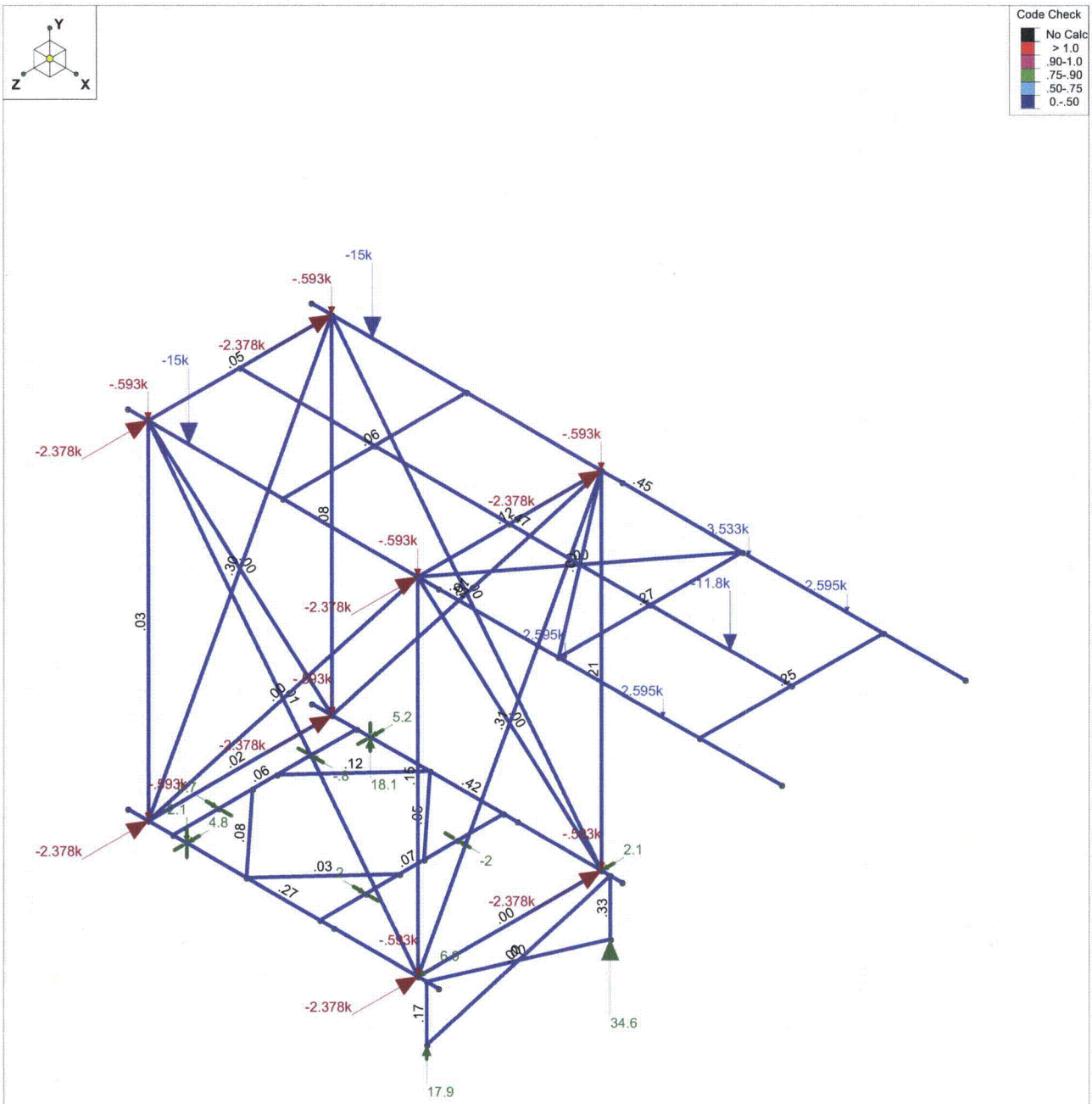

Member Code Checks Displayed
Loads: LC 19, DL+0.75LL+OL-0.75(0.7ELZ+0.7ELY)
Results for LC 19, DL+0.75LL+OL-0.75(0.7ELZ+0.7ELY)
Reaction units are k and k-ft

Precision Surveillance Corp	CR3 - BT2-60 & BT5-240 USF Design	
Brian Giometti		
CR-N1013-101		CR-N1013-101 BT2-60.BT5-240 U...

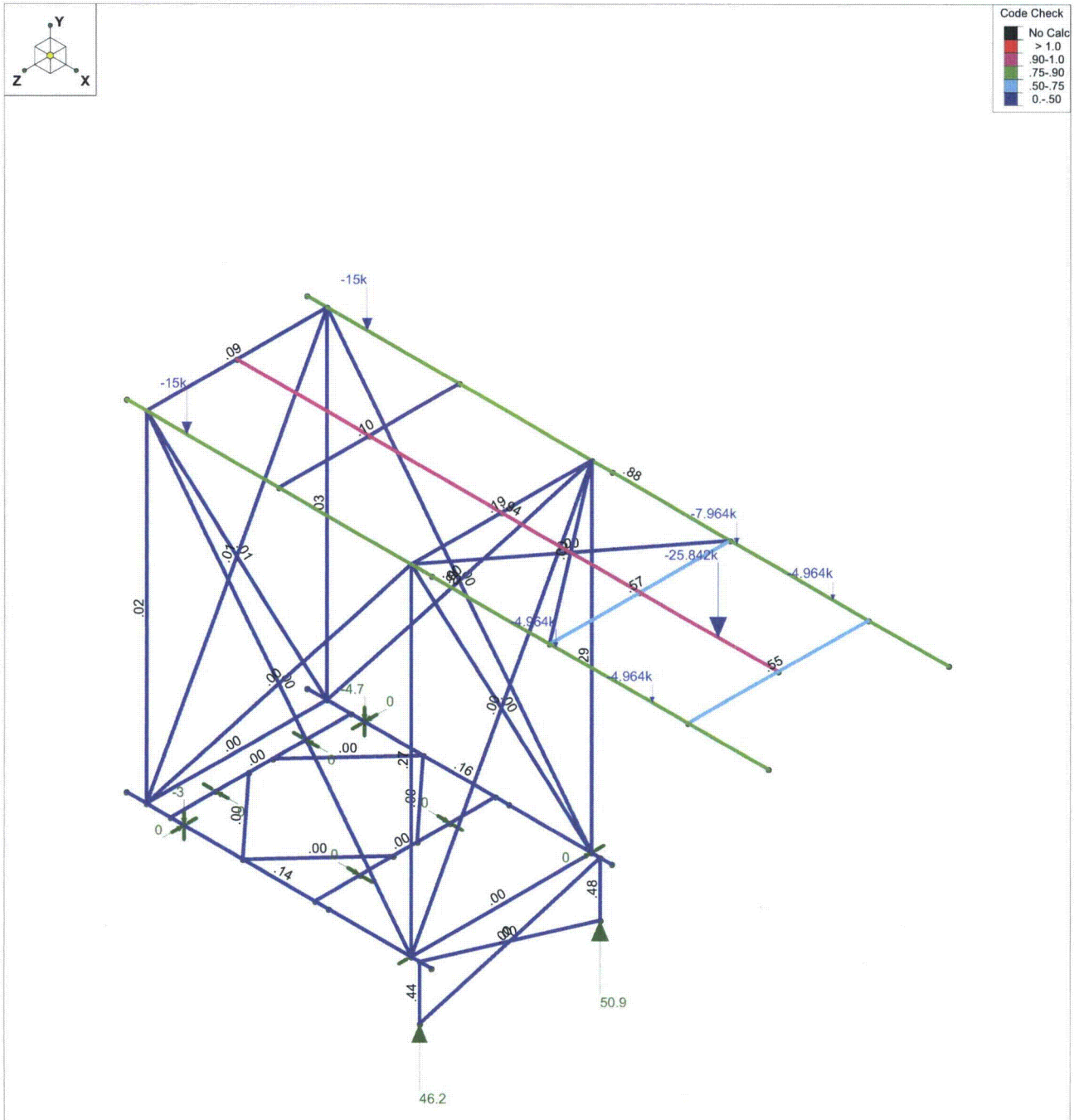

Member Code Checks Displayed
Loads: LC 20, 4:1 EQUIV
Results for LC 20, 4:1 EQUIV
Reaction units are k and k-ft

Precision Surveillance Corp	CR3 - BT2-60 & BT5-240 USF Design	
Brian Giometti		
CR-N1013-101		CR-N1013-101 BT2-60.BT5-240 U...

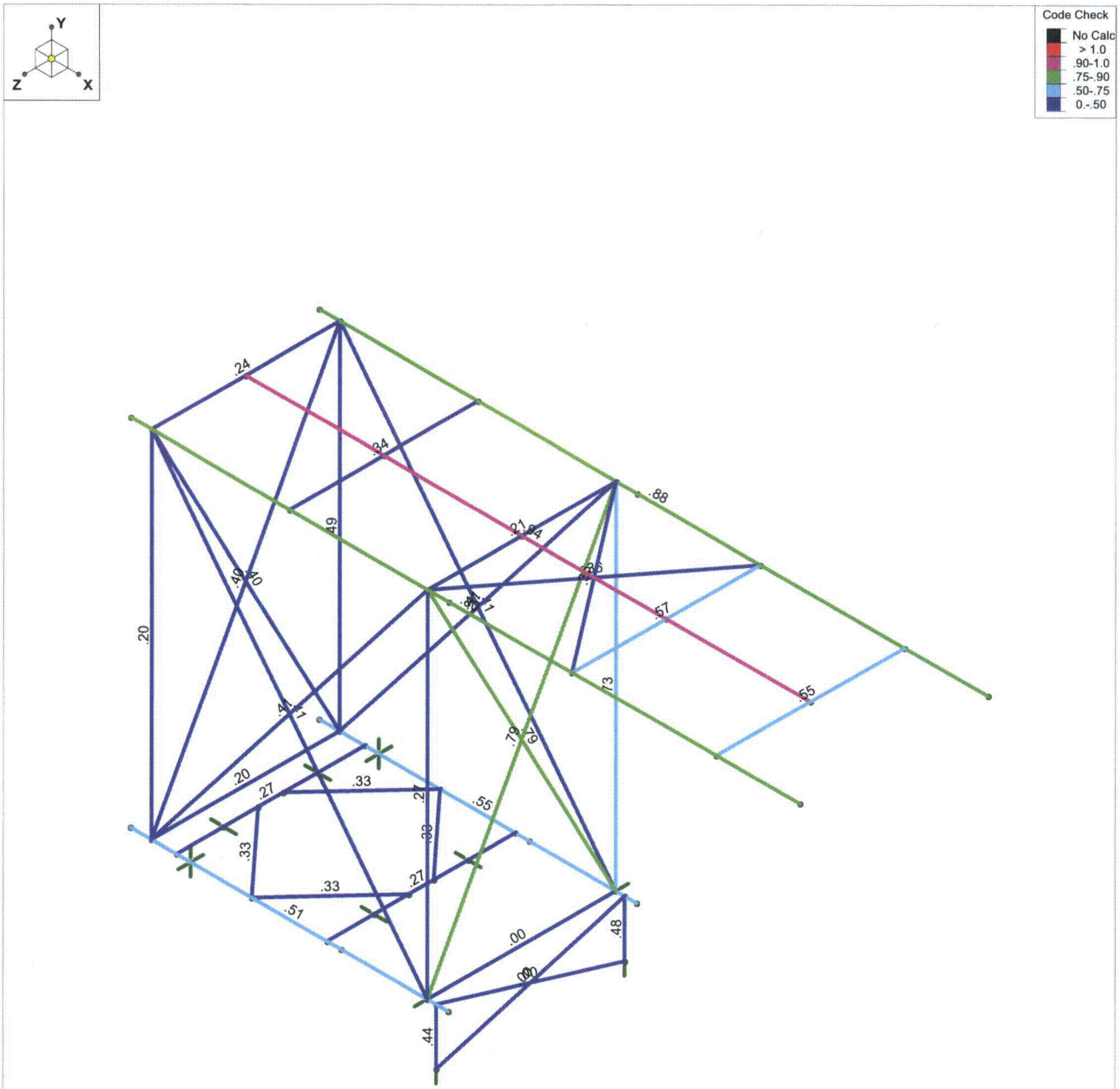

Member Code Checks Displayed
Solution: Envelope

Precision Surveillance Corp	CR3 - BT2-60 & BT5-240 USF Design	
Brian Giometti		
CR-N1013-101		CR-N1013-101 BT2-60.BT5-240 U...

Company : Precision Surveillance Corp
Designer : Brian Giometti
Job Number : CR-N1013-101 CR3 - BT2-60 & BT5-240 USF Design Checked By: CEC

Global

Display Sections for Member Calcs	2
Max Internal Sections for Member Calcs	100
Include Shear Deformation	Yes
Include Warping	Yes
Area Load Mesh (in^2)	144
Merge Tolerance (in)	.12
P-Delta Analysis Tolerance	0.50%
Vertical Axis	Y

Hot Rolled Steel Code	AISC: ASD 9th
Cold Formed Steel Code	AISI 99: ASD
Wood Code	NDS 91/97: ASD
Wood Temperature	< 100F
Concrete Code	ACI 2002

Number of Shear Regions	4
Region Spacing Increment (in)	4
Biaxial Column Method	PCA Load Contour
Parme Beta Factor (PCA)	.65
Concrete Stress Block	Rectangular
Use Cracked Sections	Yes
Bad Framing Warnings	No
Unused Force Warnings	Yes

Hot Rolled Steel Properties

	Label	E [ksi]	G [ksi]	Nu	Therm (\1E5 F)	Density[k/ft^3]	Yield[ksi]
1	A36 Gr.36	29000	11154	.3	.65	.49	36
2	A572 Gr.50	29000	11154	.3	.65	.49	50
3	A992	29000	11154	.3	.65	.49	50
4	A500 Gr.42	29000	11154	.3	.65	.49	42
5	A500 Gr.46	29000	11154	.3	.65	.49	46
6	Cable	29000	11154	.3	.65	.0	60

Material Takeoff

	Material	Size	Pieces	Length[ft]	Weight[K]
1	Hot Rolled Steel				
2	A36 Gr.36	L2X2X4	4	34.6	.1
3	A36 Gr.36	L4X4X4	8	89.5	.6
4	A36 Gr.36	S10X25.4	4	45	1.1
5	A36 Gr.36	TU4X4X6	2	4.5	0
6	A36 Gr.36	W14X30	2	15	.5
7	A36 Gr.36	W14X43	4	40.3	1.7
8	A36 Gr.36	W21X73	2	53.3	3.9
9	A36 Gr.36	W8X28	2	15	.4
10	A36 Gr.36	W8X40	4	56.7	2.3
11	Cable	3/4 IN WIRE ROPE	4	64.2	0
12	Total HR Steel		36	418.1	10.7

Hot Rolled Steel Section Sets

	Label	Shape	Type	Design List	Material	Design Rules	A [in2]	Iyy [in4]	Izz [in4]	J [in4]
1	USF Main	W21X73	Beam	Wide Flange	A36 Gr.36	Typical	21.5	70.6	1600	3.02
2	USF I Cross	S10X25.4	Beam	Wide Flange	A36 Gr.36	Typical	7.46	6.79	124	.6
3	USF O Cross	W8X28	Beam	Wide Flange	A36 Gr.36	Typical	8.25	21.7	98	.54
4	Base Main	W14X43	Beam	Wide Flange	A36 Gr.36	Typical	12.6	45.2	428	1.05

Company : Precision Surveillance Corp
Designer : Brian Giometti
Job Number : CR-N1013-101 CR3 - BT2-60 & BT5-240 USF Design Checked By: CEC

Hot Rolled Steel Section Sets (Continued)

	Label	Shape	Type	Design List	Material	Design Rules	A [in2]	Iyy [in4]	Izz [in4]	J [in4]
5	Base Cross	W14X30	Beam	Wide Flange	A36 Gr.36	Typical	8.85	19.6	291	.38
6	Trolley	S10X25.4	Beam	Wide Flange	A36 Gr.36	Typical	7.46	6.79	124	.6
7	Front Columns	W8X40	Column	Wide Flange	A36 Gr.36	Typical	11.7	49.1	146	1.12
8	Front Brace	3/4 IN WIR...	HBrace	Round Def...	Cable	Typical	.917	1	1	1
9	Side Brace	L4X4X4	HBrace	Single Angle	A36 Gr.36	Typical	1.94	3.04	3.04	.044
10	Base Rear	W14X43	Beam	Wide Flange	A36 Gr.36	Typical	12.6	45.2	428	1.05
11	Stub Columns	TU4X4X6	Column	Tube	A36 Gr.36	Typical	5.08	10.7	10.7	18.4
12	Stub Brace	L2X2X4	HBrace	Single Angle	A36 Gr.36	Typical	.938	.348	.348	.02

Member Primary Data

	Label	I Joint	J Joint	K Joint	Rotate(deg)	Section/Shape	Type	Design List	Material	Design Rules
1	M1	N1	N2			USF Main	Beam	Wide Flange	A36 Gr.36	Typical
2	M2	N3	N4			USF Main	Beam	Wide Flange	A36 Gr.36	Typical
3	M3	N9	N5			Front Columns	Column	Wide Flange	A36 Gr.36	Typical
4	M4	N11	N7			Front Columns	Column	Wide Flange	A36 Gr.36	Typical
5	M5	N10	N6			Front Columns	Column	Wide Flange	A36 Gr.36	Typical
6	M6	N12	N8			Front Columns	Column	Wide Flange	A36 Gr.36	Typical
7	M7	N13	N14			Base Main	Beam	Wide Flange	A36 Gr.36	Typical
8	M8	N15	N16			Base Main	Beam	Wide Flange	A36 Gr.36	Typical
9	M9	N9	N10			Base Cross	Beam	Wide Flange	A36 Gr.36	Typical
10	M10	N11	N12			Base Cross	Beam	Wide Flange	A36 Gr.36	Typical
11	M11	N5	N6			USF I Cross	Beam	Wide Flange	A36 Gr.36	Typical
12	M12	N17	N18			USF I Cross	Beam	Wide Flange	A36 Gr.36	Typical
13	M13	N7	N8			USF I Cross	Beam	Wide Flange	A36 Gr.36	Typical
14	M14	N19	N20			USF O Cross	Beam	Wide Flange	A36 Gr.36	Typical
15	M15	N21	N22			USF O Cross	Beam	Wide Flange	A36 Gr.36	Typical
16	M16	N28	N29			Base Rear	Beam	Wide Flange	A36 Gr.36	Typical
17	M17	N12	N7			Front Brace	HBrace	Round Default	Cable	Typical
18	M18	N8	N11			Front Brace	HBrace	Round Default	Cable	Typical
19	M19	N6	N9			Front Brace	HBrace	Round Default	Cable	Typical
20	M20	N5	N10			Front Brace	HBrace	Round Default	Cable	Typical
21	M21	N23	N24			Trolley	Beam	Wide Flange	A36 Gr.36	Typical
22	M22	N33	N35			Stub Columns	Column	Tube	A36 Gr.36	Typical
23	M23	N32	N34			Stub Columns	Column	Tube	A36 Gr.36	Typical
24	M24	N33	N34			Stub Brace	HBrace	Single Angle	A36 Gr.36	Typical
25	M25	N35	N32			Stub Brace	HBrace	Single Angle	A36 Gr.36	Typical
26	M26	N6	N12			Side Brace	HBrace	Single Angle	A36 Gr.36	Typical
27	M27	N8	N10			Side Brace	HBrace	Single Angle	A36 Gr.36	Typical
28	M28	N5	N11			Side Brace	HBrace	Single Angle	A36 Gr.36	Typical
29	M29	N7	N9			Side Brace	HBrace	Single Angle	A36 Gr.36	Typical
30	M30	N19	N8			Stub Brace	HBrace	Single Angle	A36 Gr.36	Typical
31	M31	N20	N7			Stub Brace	HBrace	Single Angle	A36 Gr.36	Typical
32	M34	N42	N43			Base Rear	Beam	Wide Flange	A36 Gr.36	Typical
33	M33	N51	N41			Side Brace	HBrace	Single Angle	A36 Gr.36	Typical
34	M34A	N41	N52			Side Brace	HBrace	Single Angle	A36 Gr.36	Typical
35	M35	N54	N40			Side Brace	HBrace	Single Angle	A36 Gr.36	Typical
36	M36	N40	N53			Side Brace	HBrace	Single Angle	A36 Gr.36	Typical

Member Advanced Data

	Label	I Release	J Release	I Offset[in]	J Offset[in]	T/C Only	Physical	TOM	Inactive
1	M1						Yes		
2	M2						Yes		
3	M3	BenPIN	BenPIN				Yes		
4	M4	BenPIN	BenPIN				Yes		
5	M5	BenPIN	BenPIN				Yes		

Company : Precision Surveillance Corp
Designer : Brian Giometti
Job Number : CR-N1013-101 CR3 - BT2-60 & BT5-240 USF Design Checked By: CEC

Member Advanced Data (Continued)

	Label	I Release	J Release	I Offset[in]	J Offset[in]	T/C Only	Physical	TOM	Inactive
6	M6	BenPIN	BenPIN				Yes		
7	M7						Yes		
8	M8						Yes		
9	M9	BenPIN	BenPIN				Yes		
10	M10	BenPIN	BenPIN				Yes	Yes	
11	M11	BenPIN	BenPIN				Yes		
12	M12	BenPIN	BenPIN				Yes		
13	M13	BenPIN	BenPIN				Yes		
14	M14	BenPIN	BenPIN				Yes		
15	M15	BenPIN	BenPIN				Yes		
16	M16	BenPIN	BenPIN				Yes		
17	M17	BenPIN	BenPIN			Euler Buckling	Yes		
18	M18	BenPIN	BenPIN			Euler Buckling	Yes		
19	M19	BenPIN	BenPIN			Euler Buckling	Yes		
20	M20	BenPIN	BenPIN			Euler Buckling	Yes		
21	M21	BenPIN	BenPIN				Yes	Yes	
22	M22	BenPIN					Yes		
23	M23	BenPIN					Yes		
24	M24	BenPIN	BenPIN				Yes		
25	M25	BenPIN	BenPIN				Yes		
26	M26	BenPIN	BenPIN			Euler Buckling	Yes		
27	M27	BenPIN	BenPIN			Euler Buckling	Yes		
28	M28	BenPIN	BenPIN			Euler Buckling	Yes		
29	M29	BenPIN	BenPIN			Euler Buckling	Yes		
30	M30	BenPIN	BenPIN			Euler Buckling	Yes		
31	M31	BenPIN	BenPIN			Euler Buckling	Yes		
32	M34	BenPIN	BenPIN				Yes		
33	M33	BenPIN	BenPIN				Yes		
34	M34A	BenPIN	BenPIN				Yes		
35	M35	BenPIN	BenPIN				Yes		
36	M36	BenPIN	BenPIN				Yes		

Joint Coordinates and Temperatures

	Label	X [ft]	Y [ft]	Z [ft]	Temp [F]	Detach From Diap...
1	N1	0	14.18	0	0	
2	N2	26.67	14.18	0	0	
3	N3	0	14.18	7.5	0	
4	N4	26.67	14.18	7.5	0	
5	N5	.833	14.18	0	0	
6	N6	.833	14.18	7.5	0	
7	N7	11.833	14.18	0	0	
8	N8	11.833	14.18	7.5	0	
9	N9	.833	0	0	0	
10	N10	.833	0	7.5	0	
11	N11	11.833	0	0	0	
12	N12	11.833	0	7.5	0	
13	N13	0	0	0	0	
14	N14	12.667	0	0	0	
15	N15	0	0	7.5	0	
16	N16	12.666	0	7.5	0	
17	N17	6.333	14.18	0	0	
18	N18	6.333	14.18	7.5	0	
19	N19	17.583	14.18	0	0	
20	N20	17.583	14.18	7.5	0	
21	N21	23.333	14.18	0	0	
22	N22	23.333	14.18	7.5	0	

Company : Precision Surveillance Corp
Designer : Brian Giometti
Job Number : CR-N1013-101 CR3 - BT2-60 & BT5-240 USF Design Checked By: CEC

Joint Coordinates and Temperatures (Continued)

	Label	X [ft]	Y [ft]	Z [ft]	Temp [F]	Detach From Diap...
23	N23	.833	14.18	3.75	0	
24	N24	23.333	14.18	3.75	0	
25	N25	6.333	14.18	3.75	0	
26	N26	11.833	14.18	3.75	0	
27	N27	17.583	14.18	3.75	0	
28	N28	1.833	0	0	0	
29	N29	1.833	0	7.5	0	
30	N30	2.397	0	0	0	
31	N31	2.396	0	7.5	0	
32	N32	12.188	0	0	0	
33	N33	12.187	0	7.5	0	
34	N34	12.188	-2.25	0	0	
35	N35	12.187	-2.25	7.5	0	
36	N36	1.833	0	1.875	0	
37	N37	1.833	0	5.625	0	
38	N40	4.833	0	0	0	
39	N41	4.833	0	7.5	0	
40	N42	7.833	0	0	0	
41	N43	7.833	0	7.5	0	
42	N45	7.833	0	1.875	0	
43	N46	7.833	0	5.625	0	
44	N47	8.397	0	0	0	
45	N48	8.396	0	7.5	0	
46	N49	12.683	14.18	0	0	
47	N50	12.683	14.18	7.5	0	
48	N51	1.833	0	4.25	0	
49	N52	7.833	0	4.25	0	
50	N53	1.833	0	3.25	0	
51	N54	7.833	0	3.25	0	

Joint Boundary Conditions

	Joint Label	X [k/in]	Y [k/in]	Z [k/in]	X Rot.[k-ft/rad]	Y Rot.[k-ft/rad]	Z Rot.[k-ft/rad]	Footing
1	N10							
2	N9							
3	N12			Reaction				
4	N11			Reaction				
5	N15							
6	N31		Reaction	Reaction				
7	N28							
8	N30		Reaction	Reaction				
9	N33							
10	N32							
11	N29							
12	N16							
13	N14							
14	N34		Reaction					
15	N35		Reaction					
16	N1							
17	N6							
18	N3							
19	N5							
20	N17							
21	N23							
22	N36	Reaction						
23	N37	Reaction						
24	N40							

Company : Precision Surveillance Corp
Designer : Brian Giometti
Job Number : CR-N1013-101 CR3 - BT2-60 & BT5-240 USF Design Checked By: CEC

Joint Boundary Conditions (Continued)

	Joint Label	X [k/in]	Y [k/in]	Z [k/in]	X Rot.[k-ft/rad]	Y Rot.[k-ft/rad]	Z Rot.[k-ft/rad]	Footing
25	N41							
26	N42							
27	N43							
28	N45	Reaction						
29	N46	Reaction						
30	N47							
31	N48							
32	N7							
33	N49							
34	N26							
35	N51							
36	N52							
37	N53							
38	N54							

Hot Rolled Steel Design Parameters

	Label	Shape	Length...	Lbyy[ft]	Lbzz[ft]	Lcomp to...	Lcomp b...	Kyy	Kzz	Cm-yy	Cm-zz	Cb	y sway	z sway	Function
1	M1	USF Main	26.67				14.85								Lateral
2	M2	USF Main	26.67				14.85								Lateral
3	M3	Front Col...	14.18												Lateral
4	M4	Front Col...	14.18												Lateral
5	M5	Front Col...	14.18												Lateral
6	M6	Front Col...	14.18												Lateral
7	M7	Base Main	12.667												Lateral
8	M8	Base Main	12.666												Lateral
9	M9	Base Cro...	7.5												Lateral
10	M10	Base Cro...	7.5												Lateral
11	M11	USF I Cr...	7.5												Lateral
12	M12	USF I Cr...	7.5												Lateral
13	M13	USF I Cr...	7.5												Lateral
14	M14	USF O C...	7.5												Lateral
15	M15	USF O C...	7.5												Lateral
16	M16	Base Rear	7.5												Lateral
17	M17	Front Bra...	16.041	100											Lateral
18	M18	Front Bra...	16.041	100											Lateral
19	M19	Front Bra...	16.041	100											Lateral
20	M20	Front Bra...	16.041	100											Lateral
21	M21	Trolley	22.5	Segment	Segment	Segment									Lateral
22	M22	Stub Col...	2.25												Lateral
23	M23	Stub Col...	2.25												Lateral
24	M24	Stub Brace	7.83												Lateral
25	M25	Stub Brace	7.83												Lateral
26	M26	Side Brace	17.946	100											Lateral
27	M27	Side Brace	17.946	100											Lateral
28	M28	Side Brace	17.946	100											Lateral
29	M29	Side Brace	17.946	100											Lateral
30	M30	Stub Brace	9.451												Lateral
31	M31	Stub Brace	9.451												Lateral
32	M34	Base Rear	7.5												Lateral
33	M33	Side Brace	4.423												Lateral
34	M34A	Side Brace	4.423												Lateral
35	M35	Side Brace	4.423												Lateral
36	M36	Side Brace	4.423												Lateral

Company : Precision Surveillance Corp
Designer : Brian Giometti
Job Number : CR-N1013-101 CR3 - BT2-60 & BT5-240 USF Design Checked By: CEC

Joint Loads and Enforced Displacements (BLC 12 : Horiz EQ X)

	Joint Label	L,D,M	Direction	Magnitude[(k,k-ft), (in,rad), (k*s^2/f...
1	N6	L	X	7.42
2	N5	L	X	7.42
3	N7	L	X	7.42
4	N8	L	X	7.42
5	N10	L	X	7.42
6	N9	L	X	7.42
7	N11	L	X	7.42
8	N12	L	X	7.42

Joint Loads and Enforced Displacements (BLC 13 : Horiz EQ Z)

	Joint Label	L,D,M	Direction	Magnitude[(k,k-ft), (in,rad), (k*s^2/f...
1	N6	L	Z	4.53
2	N5	L	Z	4.53
3	N7	L	Z	4.53
4	N8	L	Z	4.53
5	N10	L	Z	4.53
6	N9	L	Z	4.53
7	N11	L	Z	4.53
8	N12	L	Z	4.53

Joint Loads and Enforced Displacements (BLC 14 : Vertical EQ Y)

	Joint Label	L,D,M	Direction	Magnitude[(k,k-ft), (in,rad), (k*s^2/f...
1	N6	L	Y	1.13
2	N5	L	Y	1.13
3	N7	L	Y	1.13
4	N8	L	Y	1.13
5	N10	L	Y	1.13
6	N9	L	Y	1.13
7	N11	L	Y	1.13
8	N12	L	Y	1.13

Member Point Loads (BLC 2 : Platform Dead)

	Member Label	Direction	Magnitude[k,k-ft]	Location[ft,%]
1	M1	Y	-.96	17.85
2	M2	Y	-.96	17.85
3	M2	Y	-.96	21.85
4	M1	Y	-.96	21.85

Member Point Loads (BLC 3 : Platform Live)

	Member Label	Direction	Magnitude[k,k-ft]	Location[ft,%]
1	M2	Y	-.46	21.85
2	M1	Y	-.46	21.85
3	M2	Y	-.46	17.85
4	M1	Y	-.46	17.85

Member Point Loads (BLC 4 : Tractel Basket)

	Member Label	Direction	Magnitude[k,k-ft]	Location[ft,%]
1	M2	Y	-1.1	17.85
2	M1	Y	-1.1	17.85
3	M2	Y	-1.1	21.85
4	M1	Y	-1.1	21.85

Company : Precision Surveillance Corp
Designer : Brian Giometti
Job Number : CR-N1013-101 CR3 - BT2-60 & BT5-240 USF Design Checked By: CEC

Member Point Loads (BLC 5 : Counterweight)

	Member Label	Direction	Magnitude[k,k-ft]	Location[ft,%]
1	M2	Y	-15	2.5
2	M1	Y	-15	2.5

Member Point Loads (BLC 6 : Trolley/Hoist (in))

	Member Label	Direction	Magnitude[k,k-ft]	Location[ft,%]
1	M21	Y	-11.8	4

Member Point Loads (BLC 7 : Trolley/Hoist (out))

	Member Label	Direction	Magnitude[k,k-ft]	Location[ft,%]
1	M21	Y	-11.8	20

Member Point Loads (BLC 8 : Pump (in PLT))

	Member Label	Direction	Magnitude[k,k-ft]	Location[ft,%]
1	M1	Y	-.19	17.85
2	M2	Y	-.19	17.85
3	M2	Y	-.19	21.85
4	M1	Y	-.19	21.85

Member Point Loads (BLC 9 : Spider Basket)

	Member Label	Direction	Magnitude[k,k-ft]	Location[ft,%]
1	M1	Y	-1.25	17.85

Member Distributed Loads (BLC 10 : 300mph Wind X)

	Member Label	Direction	Start Magnitude[k/ft,...	End Magnitude[k/ft,d...	Start Location[ft,%]	End Location[ft,%]
1	M11	X	.375	.375	0	0
2	M5	X	.375	.375	0	0
3	M3	X	.375	.375	0	0
4	M9	X	.375	.375	0	0

Member Distributed Loads (BLC 11 : 300mph Wind Z)

	Member Label	Direction	Start Magnitude[k/ft,...	End Magnitude[k/ft,d...	Start Location[ft,%]	End Location[ft,%]
1	M1	Z	.41	.41	0	0
2	M3	Z	.41	.41	0	0
3	M4	Z	.41	.41	0	0
4	M7	Z	.41	.41	0	0

Member Area Loads

Joint A	Joint B	Joint C	Joint D	Direction	Distribution	Magnitude[ksf]
No Data to Print ...						

Basic Load Cases

	BLC Description	Category	X Gravity	Y Gravity	Z Gravity	Joint	Point	Distributed	Area (Me...	Surface (...
1	Self Weight	DL		-1						
2	Platform Dead	DL					4			
3	Platform Live	LL					4			
4	Tractel Basket	DL					4			
5	Counterweight	DL					2			
6	Trolley/Hoist (in)	OL1					1			
7	Trolley/Hoist (out)	OL2					1			
8	Pump (in PLT)	OL3					4			
9	Spider Basket	LL					1			

Company : Precision Surveillance Corp
Designer : Brian Giometti
Job Number : CR-N1013-101 CR3 - BT2-60 & BT5-240 USF Design Checked By: CEC

Basic Load Cases (Continued)

	BLC Description	Category	X Gravity	Y Gravity	Z Gravity	Joint	Point	Distributed	Area (Me...	Surface (...
10	300mph Wind X	WLX						4		
11	300mph Wind Z	WLZ						4		
12	Horiz EQ X	ELX				8				
13	Horiz EQ Z	ELZ				8				
14	Vertical EQ Y	ELY				8				

Load Combinations

	Description	Sol...	PD...	SR...	BLC	Factor	BLC	Factor	BLC	Factor	BLC	Factor	BLC	Factor	BLC	Factor	BLC	Factor	BLC	Factor
1	DL+LL	Yes			DL	1	LL	1												
2	DL+LL+OL1+OL3	Yes			DL	1	LL	1	OL1	1	OL3	1								
3	DL+LL+OL2+OL3	Yes			DL	1	LL	1	OL2	1	OL3	1								
4	DL+OL+WLX	Yes			L22	1	WLX	1												
5	DL+OL-WLX	Yes			L22	1	WLX	-1												
6	DL+OL+WLZ	Yes			L22	1	WLZ	1												
7	DL+OL-WLZ	Yes			L22	1	WLZ	-1												
8	DL+OL+0.7(ELX+ELY)	Yes			L22	1	L23	1												
9	DL+OL-0.7(ELX+ELY)	Yes			L22	1	L23	-1												
10	DL+OL+0.7(ELZ+ELY)	Yes			L22	1	L24	1												
11	DL+OL-0.7(ELZ+ELY)	Yes			L22	1	L24	-1												
12	DL+0.75LL+OL+0.75WLX	Yes			L22	1	LL	.75	WLX	.75										
13	DL+0.75LL+OL-0.75WLX	Yes			L22	1	LL	.75	WLX	-.75										
14	DL+0.75LL+OL+0.75WLZ	Yes			L22	1	LL	.75	WLZ	.75										
15	DL+0.75LL+OL-0.75WLZ	Yes			L22	1	LL	.75	WLZ	-.75										
16	DL+0.75LL+OL+0.75(0.7EL...	Yes			L22	1	LL	.75	L23	.75										
17	DL+0.75LL+OL-0.75(0.7EL...	Yes			L22	1	LL	.75	L23	-.75										
18	DL+0.75LL+OL+0.75(0.7EL...	Yes			L22	1	LL	.75	L24	.75										
19	DL+0.75LL+OL-0.75(0.7EL...	Yes			L22	1	LL	.75	L24	-.75										
20	4:1 EQUIV	Yes			L3	1	OL2	1.19	2	1.4	3	1.4	8	1.4	9	1.4				
21	Selfweight (COG ONLY)				Y	-1														
22	DL+OL				DL	1	OL2	1	OL3	1										
23	0.7(ELX+ELY)				ELX	.7	ELY	.7												
24	0.7(ELZ+ELY)				ELZ	.7	ELY	.7												

Load Combination Design

	Description	ASIF	CD	ABIF	Service	Hot Rolled	Cold Form...	Wood	Concrete	Footings
1	DL+LL					Yes	Yes	Yes	Yes	Yes
2	DL+LL+OL1+OL3					Yes	Yes	Yes	Yes	Yes
3	DL+LL+OL2+OL3					Yes	Yes	Yes	Yes	Yes
4	DL+OL+WLX					Yes	Yes	Yes	Yes	Yes
5	DL+OL-WLX					Yes	Yes	Yes	Yes	Yes
6	DL+OL+WLZ					Yes	Yes	Yes	Yes	Yes
7	DL+OL-WLZ					Yes	Yes	Yes	Yes	Yes
8	DL+OL+0.7(ELX+ELY)					Yes	Yes	Yes	Yes	Yes
9	DL+OL-0.7(ELX+ELY)					Yes	Yes	Yes	Yes	Yes
10	DL+OL+0.7(ELZ+ELY)					Yes	Yes	Yes	Yes	Yes
11	DL+OL-0.7(ELZ+ELY)					Yes	Yes	Yes	Yes	Yes
12	DL+0.75LL+OL+0.75WLX					Yes	Yes	Yes	Yes	Yes
13	DL+0.75LL+OL-0.75WLX					Yes	Yes	Yes	Yes	Yes
14	DL+0.75LL+OL+0.75WLZ					Yes	Yes	Yes	Yes	Yes
15	DL+0.75LL+OL-0.75WLZ					Yes	Yes	Yes	Yes	Yes
16	DL+0.75LL+OL+0.75(0.7ELX+0.7...					Yes	Yes	Yes	Yes	Yes
17	DL+0.75LL+OL-0.75(0.7ELX+0.7...					Yes	Yes	Yes	Yes	Yes
18	DL+0.75LL+OL+0.75(0.7ELZ+0.7...					Yes	Yes	Yes	Yes	Yes
19	DL+0.75LL+OL-0.75(0.7ELZ+0.7...					Yes	Yes	Yes	Yes	Yes
20	4:1 EQUIV					Yes	Yes	Yes	Yes	Yes

Company : Precision Surveillance Corp
Designer : Brian Giometti
Job Number : CR-N1013-101 CR3 - BT2-60 & BT5-240 USF Design Checked By: CEC

Load Combination Design (Continued)

	Description	ASIF	CD	ABIF	Service	Hot Rolled	Cold Form...	Wood	Concrete	Footings
21	Selfweight (COG ONLY)					Yes	Yes	Yes	Yes	Yes
22	DL+OL					Yes	Yes	Yes	Yes	Yes
23	0.7(ELX+ELY)					Yes	Yes	Yes	Yes	Yes
24	0.7(ELZ+ELY)					Yes	Yes	Yes	Yes	Yes

Envelope Joint Displacements

	Joint		X [in]	lc	Y [in]	lc	Z [in]	lc	X Rotation ...	lc	Y Rotation ...	lc	Z Rotation [...	lc
1	N1	max	.196	8	.024	8	.321	10	1.195e-3	6	1.671e-3	7	4.412e-4	9
2		min	-.179	9	-.048	9	-.321	11	-2.156e-3	11	-1.632e-3	6	-1.874e-4	8
3	N2	max	.195	8	-.201	2	1.234	6	1.195e-3	6	5.793e-3	7	-1.164e-3	2
4		min	-.18	9	-1.017	20	-1.23	7	-2.156e-3	11	-5.806e-3	6	-5.97e-3	20
5	N3	max	.196	8	.024	8	.319	10	2.165e-3	10	1.544e-3	7	4.409e-4	9
6		min	-.179	9	-.048	9	-.323	11	-1.062e-3	7	-1.578e-3	6	-1.87e-4	8
7	N4	max	.195	8	-.166	2	1.222	6	2.165e-3	10	5.466e-3	7	-9.752e-4	2
8		min	-.18	9	-.934	20	-1.218	7	-1.062e-3	7	-5.485e-3	6	-5.516e-3	20
9	N5	max	.196	8	.023	20	.316	10	1.195e-3	6	1.674e-3	7	4.412e-4	9
10		min	-.179	9	-.043	9	-.316	11	-2.156e-3	11	-1.635e-3	6	-1.875e-4	8
11	N6	max	.196	8	.022	8	.314	10	2.165e-3	10	1.544e-3	7	4.409e-4	9
12		min	-.179	9	-.043	9	-.318	11	-1.062e-3	7	-1.578e-3	6	-1.87e-4	8
13	N7	max	.195	8	-.012	1	.465	6	1.195e-3	6	1.832e-3	7	-4.019e-4	2
14		min	-.18	9	-.043	20	-.46	7	-2.156e-3	11	-1.859e-3	6	-2.995e-3	20
15	N8	max	.195	8	-.011	1	.46	6	2.165e-3	10	1.827e-3	7	-2.829e-4	2
16		min	-.18	9	-.039	20	-.462	7	-1.062e-3	7	-1.821e-3	6	-2.709e-3	20
17	N9	max	.018	8	.024	8	.027	10	4.169e-5	6	1.694e-3	10	1.425e-3	9
18		min	-.016	9	-.034	9	-.027	11	-5.147e-5	7	-1.621e-3	11	-1.085e-3	8
19	N10	max	.018	8	.024	8	.027	10	5.134e-5	6	1.621e-3	10	1.424e-3	9
20		min	-.016	9	-.034	9	-.027	11	-4.173e-5	7	-1.695e-3	11	-1.084e-3	8
21	N11	max	.017	8	-.001	9	0	6	4.942e-5	6	5.376e-4	6	7.283e-4	20
22		min	-.019	9	-.018	20	0	7	-4.957e-5	7	-5.404e-4	7	-3.498e-4	9
23	N12	max	.017	8	-.001	9	0	10	4.945e-5	6	4.841e-4	6	6.625e-4	8
24		min	-.019	9	-.016	20	0	7	-4.955e-5	7	-4.827e-4	7	-3.499e-4	9
25	N13	max	.018	8	.035	8	.044	10	4.169e-5	6	1.694e-3	10	1.425e-3	9
26		min	-.016	9	-.048	9	-.043	11	-5.147e-5	7	-1.621e-3	11	-1.085e-3	8
27	N14	max	.017	8	0	6	.005	7	4.942e-5	6	5.333e-4	6	7.654e-4	20
28		min	-.019	9	-.007	7	-.005	6	-4.957e-5	7	-5.36e-4	7	-3.43e-4	9
29	N15	max	.018	8	.035	8	.043	10	5.134e-5	6	1.621e-3	10	1.424e-3	9
30		min	-.016	9	-.048	9	-.044	11	-4.173e-5	7	-1.695e-3	11	-1.084e-3	8
31	N16	max	.017	8	0	7	.005	7	4.945e-5	6	4.841e-4	6	6.894e-4	8
32		min	-.019	9	-.007	6	-.005	6	-4.955e-5	7	-4.827e-4	7	-3.431e-4	9
33	N17	max	.196	8	.042	20	.369	6	1.195e-3	6	1.284e-3	7	2.991e-4	9
34		min	-.18	9	-.018	7	-.368	7	-2.156e-3	11	-1.321e-3	6	-3.597e-4	20
35	N18	max	.196	8	.037	20	.369	6	2.165e-3	10	1.346e-3	7	2.988e-4	9
36		min	-.18	9	-.019	2	-.368	7	-1.062e-3	7	-1.311e-3	6	-3.291e-4	8
37	N19	max	.195	8	-.074	2	.658	6	1.195e-3	6	4.001e-3	7	-1.06e-3	2
38		min	-.18	9	-.369	20	-.654	7	-2.156e-3	11	-3.976e-3	6	-5.472e-3	20
39	N20	max	.195	8	-.06	2	.656	6	2.165e-3	10	4.005e-3	7	-8.706e-4	2
40		min	-.18	9	-.335	20	-.655	7	-1.062e-3	7	-4.065e-3	6	-5.018e-3	20
41	N21	max	.195	8	-.154	2	1.003	6	1.195e-3	6	5.614e-3	7	-1.163e-3	2
42		min	-.18	9	-.777	20	-.999	7	-2.156e-3	11	-5.627e-3	6	-5.969e-3	20
43	N22	max	.195	8	-.127	2	1.002	6	2.165e-3	10	5.466e-3	7	-9.738e-4	2
44		min	-.18	9	-.713	20	-.999	7	-1.062e-3	7	-5.485e-3	6	-5.514e-3	20
45	N23	max	.191	8	.026	20	.315	10	6.051e-4	6	2.201e-3	7	1.22e-2	5
46		min	-.185	9	-.042	2	-.317	11	-6.062e-4	7	-2.197e-3	6	-1.419e-2	4
47	N24	max	.196	8	-.14	2	1.003	6	2.77e-4	7	2.219e-3	7	-5.689e-4	4
48		min	-.18	9	-.826	20	-.999	7	-7.199e-4	20	-2.215e-3	6	-4.899e-3	20
49	N25	max	.186	8	.042	20	.369	6	3.875e-4	6	1.785e-3	7	6.748e-4	2

Company : Precision Surveillance Corp
Designer : Brian Giometti
Job Number : CR-N1013-101 CR3 - BT2-60 & BT5-240 USF Design Checked By: CEC

Envelope Joint Displacements (Continued)

	Joint		X [in]	lc	Y [in]	lc	Z [in]	lc	X Rotation ...	lc	Y Rotation ...	lc	Z Rotation [...	lc
50		min	-.19	9	-.056	2	-.368	7	-3.881e-4	7	-1.784e-3	6	-3.55e-4	8
51	N26	max	.192	8	-.017	1	.463	6	1.593e-4	6	2.15e-3	7	-2.445e-5	2
52		min	-.183	9	-.06	20	-.461	7	-1.593e-4	7	-2.156e-3	6	-3.346e-3	20
53	N27	max	.2	8	-.066	2	.657	6	6.07e-5	7	2.553e-3	7	-9.429e-4	2
54		min	-.175	9	-.429	20	-.654	7	-3.714e-4	20	-2.554e-3	6	-6.941e-3	20
55	N28	max	.017	8	.008	8	.008	10	4.222e-5	6	1.337e-3	10	1.308e-3	9
56		min	-.016	9	-.012	9	-.008	11	-5.147e-5	7	-1.294e-3	11	-1.028e-3	8
57	N29	max	.017	8	.008	8	.008	10	5.134e-5	6	1.295e-3	10	1.307e-3	9
58		min	-.016	9	-.011	9	-.008	11	-4.227e-5	7	-1.337e-3	11	-1.027e-3	8
59	N30	max	.017	8	0	6	0	10	4.252e-5	6	8.899e-4	10	1.139e-3	9
60		min	-.016	9	0	7	0	11	-5.147e-5	7	-8.7e-4	11	-9.465e-4	8
61	N31	max	.017	8	0	7	0	10	5.134e-5	6	8.714e-4	10	1.138e-3	9
62		min	-.016	9	0	6	0	11	-4.257e-5	7	-8.911e-4	11	-9.455e-4	8
63	N32	max	.017	8	-.002	6	.002	7	4.942e-5	6	5.341e-4	6	7.654e-4	20
64		min	-.019	9	-.009	20	-.002	6	-4.957e-5	7	-5.369e-4	7	-3.43e-4	9
65	N33	max	.017	8	-.002	7	.002	7	4.945e-5	6	4.841e-4	6	6.894e-4	8
66		min	-.019	9	-.008	20	-.002	6	-4.955e-5	7	-4.827e-4	7	-3.431e-4	9
67	N34	max	.035	8	0	6	.002	7	9.403e-5	20	5.341e-4	6	6.878e-4	8
68		min	-.028	9	0	20	-.004	6	2.09e-5	9	-5.369e-4	7	-3.401e-4	9
69	N35	max	.036	8	0	7	.004	7	-1.077e-5	6	4.841e-4	6	7.654e-4	20
70		min	-.028	9	0	20	-.002	6	-1.037e-4	20	-4.827e-4	7	-3.4e-4	9
71	N36	max	0	8	.008	8	.008	10	1.846e-4	6	2.135e-4	9	1.299e-3	9
72		min	0	9	-.012	9	-.007	11	-1.712e-4	7	-2.445e-4	8	-1.023e-3	8
73	N37	max	0	8	.008	8	.007	10	1.709e-4	6	2.445e-4	8	1.299e-3	9
74		min	0	9	-.012	9	-.008	11	-1.85e-4	7	-2.134e-4	9	-1.023e-3	8
75	N40	max	.016	8	.019	9	.008	6	4.381e-5	6	4.244e-4	7	3.813e-4	9
76		min	-.016	9	-.021	8	-.008	7	-5.147e-5	7	-4.274e-4	6	-5.309e-4	20
77	N41	max	.016	8	.019	9	.007	6	5.134e-5	6	4.157e-4	7	3.809e-4	9
78		min	-.016	9	-.021	8	-.008	7	-4.388e-5	7	-4.116e-4	6	-5.146e-4	8
79	N42	max	.016	8	.018	9	.016	6	4.622e-5	6	2.247e-5	6	6.523e-5	6
80		min	-.017	9	-.033	20	-.016	7	-5.065e-5	7	-2.082e-5	7	-2.393e-4	7
81	N43	max	.016	8	.018	9	.016	6	5.053e-5	6	2.474e-5	6	6.544e-5	7
82		min	-.017	9	-.03	8	-.016	7	-4.631e-5	7	-2.643e-5	7	-2.391e-4	6
83	N45	max	0	8	.018	9	.016	6	2.423e-4	7	2.428e-4	9	5.807e-6	8
84		min	0	9	-.032	20	-.016	7	-2.281e-4	6	-2.118e-4	8	-1.794e-4	9
85	N46	max	0	8	.018	9	.016	6	2.285e-4	7	2.118e-4	8	5.89e-6	8
86		min	0	9	-.031	8	-.016	7	-2.419e-4	6	-2.428e-4	9	-1.794e-4	9
87	N47	max	.016	8	.016	9	.016	6	4.667e-5	6	1.165e-4	6	1.212e-4	6
88		min	-.018	9	-.033	20	-.016	7	-5.05e-5	7	-1.154e-4	7	-2.613e-4	7
89	N48	max	.016	8	.016	9	.016	6	5.038e-5	6	1.457e-4	6	1.214e-4	7
90		min	-.018	9	-.03	8	-.016	7	-4.676e-5	7	-1.472e-4	7	-2.61e-4	6
91	N49	max	.195	8	-.019	1	.485	6	1.195e-3	6	2.119e-3	7	-5.477e-4	2
92		min	-.18	9	-.079	20	-.48	7	-2.156e-3	11	-2.122e-3	6	-3.532e-3	20
93	N50	max	.195	8	-.016	1	.48	6	2.165e-3	10	2.055e-3	7	-4.103e-4	2
94		min	-.18	9	-.072	20	-.482	7	-1.062e-3	7	-2.078e-3	6	-3.202e-3	20
95	N51	max	.002	8	.008	8	.007	10	1.757e-4	6	1.273e-4	9	1.293e-3	9
96		min	-.002	9	-.012	9	-.007	11	-1.801e-4	7	-1.202e-4	8	-1.019e-3	8
97	N52	max	.002	8	.018	9	.016	6	2.334e-4	7	1.216e-4	9	2.261e-6	8
98		min	-.002	9	-.031	8	-.016	7	-2.37e-4	6	-1.286e-4	8	-1.756e-4	9
99	N53	max	.002	8	.008	8	.007	10	1.798e-4	6	1.202e-4	8	1.293e-3	9
100		min	-.002	9	-.012	9	-.007	11	-1.761e-4	7	-1.273e-4	9	-1.019e-3	8
101	N54	max	.002	8	.018	9	.016	6	2.374e-4	7	1.286e-4	8	2.239e-6	8
102		min	-.002	9	-.031	20	-.016	7	-2.33e-4	6	-1.216e-4	9	-1.756e-4	9

Company : Precision Surveillance Corp
Designer : Brian Giometti
Job Number : CR-N1013-101 CR3 - BT2-60 & BT5-240 USF Design Checked By: CEC

Envelope Joint Reactions

	Joint		X [k]	lc	Y [k]	lc	Z [k]	lc	MX [k-ft]	lc	MY [k-ft]	lc	MZ [k-ft]	lc
1	N12	max	0	1	0	1	12.701	7	0	1	0	1	0	1
2		min	0	1	0	1	-2.779	10	0	1	0	1	0	1
3	N11	max	0	1	0	1	4.466	7	0	1	0	1	0	1
4		min	0	1	0	1	-16.641	6	0	1	0	1	0	1
5	N31	max	0	1	24.975	6	6.358	11	0	1	0	1	0	1
6		min	0	1	-10.141	7	-6.944	10	0	1	0	1	0	1
7	N30	max	0	1	25.007	7	6.913	11	0	1	0	1	0	1
8		min	0	1	-10.116	6	-6.321	10	0	1	0	1	0	1
9	N34	max	0	1	50.937	20	0	1	0	1	0	1	0	1
10		min	0	1	9.192	6	0	1	0	1	0	1	0	1
11	N35	max	0	1	46.211	20	0	1	0	1	0	1	0	1
12		min	0	1	9.217	7	0	1	0	1	0	1	0	1
13	N36	max	10.293	9	0	1	0	1	0	1	0	1	0	1
14		min	-10.438	8	0	1	0	1	0	1	0	1	0	1
15	N37	max	10.293	9	0	1	0	1	0	1	0	1	0	1
16		min	-10.438	8	0	1	0	1	0	1	0	1	0	1
17	N45	max	10.483	9	0	1	0	1	0	1	0	1	0	1
18		min	-10.338	8	0	1	0	1	0	1	0	1	0	1
19	N46	max	10.483	9	0	1	0	1	0	1	0	1	0	1
20		min	-10.338	8	0	1	0	1	0	1	0	1	0	1
21	Totals:	max	41.552	9	89.382	20	27.756	7						
22		min	-41.552	8	52.014	1	-27.756	6						

Envelope Member Section Forces

	Member	Sec		Axial[k]	lc	y Shear[k]	lc	z Shear[k]	lc	Torque[k-ft]	lc	y-y Momen...	lc	z-z Momen...	lc
1	M1	1	max	0	1	0	1	0	1	0	1	0	1	0	1
2			min	0	1	0	1	0	1	0	1	0	1	0	1
3		2	max	0	1	0	1	0	1	0	1	0	1	0	1
4			min	0	1	0	1	0	1	0	1	0	1	0	1
5	M2	1	max	0	1	0	1	0	1	0	1	0	1	0	1
6			min	0	1	0	1	0	1	0	1	0	1	0	1
7		2	max	0	1	0	1	0	1	0	1	0	1	0	1
8			min	0	1	0	1	0	1	0	1	0	1	0	1
9	M3	1	max	19.563	7	2.659	4	2.907	7	.015	6	0	1	0	1
10			min	-6.101	20	-2.659	5	-2.907	6	-.015	7	0	1	0	1
11		2	max	18.999	7	2.659	5	2.907	6	.015	6	0	1	0	1
12			min	-6.666	20	-2.659	4	-2.907	7	-.015	7	0	1	0	1
13	M4	1	max	51.259	20	0	1	2.907	7	.015	6	0	1	0	1
14			min	16.609	1	0	1	-2.907	6	-.015	7	0	1	0	1
15		2	max	50.695	20	0	1	2.907	6	.015	6	0	1	0	1
16			min	16.045	1	0	1	-2.907	7	-.015	7	0	1	0	1
17	M5	1	max	19.541	6	2.659	4	0	1	.014	6	0	1	0	1
18			min	-4.464	20	-2.659	5	0	1	-.014	7	0	1	0	1
19		2	max	18.976	6	2.659	5	0	1	.014	6	0	1	0	1
20			min	-5.029	20	-2.659	4	0	1	-.014	7	0	1	0	1
21	M6	1	max	47.496	6	0	1	0	1	.014	6	0	1	0	1
22			min	14.677	1	0	1	0	1	-.014	7	0	1	0	1
23		2	max	46.932	6	0	1	0	1	.014	6	0	1	0	1
24			min	14.112	1	0	1	0	1	-.014	7	0	1	0	1
25	M7	1	max	0	1	0	1	0	1	0	1	0	1	0	1
26			min	0	1	0	1	0	1	0	1	0	1	0	1
27		2	max	0	1	0	1	0	1	0	1	0	1	0	1
28			min	0	1	0	1	0	1	0	1	0	1	0	1
29	M8	1	max	0	1	0	1	0	1	0	1	0	1	0	1
30			min	0	1	0	1	0	1	0	1	0	1	0	1

Company : Precision Surveillance Corp
Designer : Brian Giometti
Job Number : CR-N1013-101 CR3 - BT2-60 & BT5-240 USF Design Checked By: CEC

Envelope Member Section Forces (Continued)

	Member	Sec		Axial[k]	lc	y Shear[k]	lc	z Shear[k]	lc	Torque[k-ft]	lc	y-y Momen...	lc	z-z Momen...	lc
31		2	max	0	1	0	1	0	1	0	1	0	1	0	1
32			min	0	1	0	1	0	1	0	1	0	1	0	1
33	M9	1	max	3.647	6	.113	7	1.406	4	.008	7	0	1	0	1
34			min	-.147	8	.113	6	-1.406	5	-.008	6	0	1	0	1
35		2	max	3.647	6	-.113	7	1.406	5	.008	7	0	1	0	1
36			min	-.147	8	-.113	6	-1.406	4	-.008	6	0	1	0	1
37	M10	1	max	.001	9	.113	9	0	1	.002	6	0	1	0	1
38			min	0	8	.113	20	0	1	-.002	7	0	1	0	1
39		2	max	.001	9	-.113	9	0	1	.002	6	0	9	0	1
40			min	0	8	-.113	20	0	1	-.002	7	0	8	0	1
41	M11	1	max	4.353	6	1.73	2	.984	4	.176	4	0	1	0	1
42			min	0	1	-.564	20	-1.051	5	-.148	5	0	1	0	1
43		2	max	4.314	6	.564	20	1.051	5	.148	5	0	1	0	1
44			min	0	1	-1.73	2	-.984	4	-.176	4	0	1	0	1
45	M12	1	max	1.5	6	3.887	2	.058	7	.002	7	0	1	0	1
46			min	-1.274	7	-.256	20	-.185	6	-.007	2	0	1	0	1
47		2	max	1.25	6	.256	20	.186	7	.006	2	0	1	0	1
48			min	-1.023	7	-3.887	2	-.058	6	-.002	6	0	1	0	1
49	M13	1	max	11.175	6	1.989	20	.048	4	.005	7	0	1	0	1
50			min	-.002	13	.615	1	-.087	5	-.005	2	0	1	0	1
51		2	max	11.697	6	-.614	1	.087	5	.003	2	0	1	0	1
52			min	-.002	5	-1.988	20	-.048	4	-.008	20	0	1	0	1
53	M14	1	max	3.996	6	6.118	20	.419	6	.016	20	0	1	0	1
54			min	-.057	11	-.076	2	-.201	7	-.001	1	0	1	0	1
55		2	max	4.068	6	.076	2	.205	6	0	1	0	1	0	1
56			min	-.058	10	-6.118	20	-.415	7	-.021	20	0	1	0	1
57	M15	1	max	1.528	6	6.415	20	.054	4	.014	5	0	1	0	1
58			min	-1.561	7	-.011	2	-.033	5	-.023	4	0	1	0	1
59		2	max	1.221	6	.011	2	.033	5	.023	4	0	1	0	1
60			min	-1.256	7	-6.416	20	-.054	4	-.014	5	0	1	0	1
61	M16	1	max	4.056	10	.175	6	3.642	9	.02	7	0	1	0	1
62			min	-2.83	11	.175	20	-3.743	8	-.019	6	0	1	0	1
63		2	max	4.023	11	-.175	6	3.743	8	.02	7	0	1	0	1
64			min	-2.792	10	-.175	20	-3.642	9	-.02	6	0	1	0	1
65	M17	1	max	0	1	0	1	0	1	0	1	0	1	0	1
66			min	-26.028	7	0	1	0	1	-.013	7	0	1	0	1
67		2	max	0	1	0	1	0	1	0	1	0	1	0	1
68			min	-26.028	7	0	1	0	1	-.013	7	0	1	0	1
69	M18	1	max	0	1	0	1	0	1	.013	6	0	1	0	1
70			min	-26.041	6	0	1	0	1	0	1	0	1	0	1
71		2	max	0	1	0	1	0	1	.013	6	0	1	0	1
72			min	-26.041	6	0	1	0	1	0	1	0	1	0	1
73	M19	1	max	0	1	0	1	0	1	.008	6	0	1	0	1
74			min	-13.134	10	0	1	0	1	-.002	20	0	1	0	1
75		2	max	0	1	0	1	0	1	.008	6	0	1	0	1
76			min	-13.134	10	0	1	0	1	-.002	20	0	1	0	1
77	M20	1	max	0	1	0	1	0	1	.003	20	0	1	0	1
78			min	-13.149	11	0	1	0	1	-.008	7	0	1	0	1
79		2	max	0	1	0	1	0	1	.003	20	0	1	0	1
80			min	-13.149	11	0	1	0	1	-.008	7	0	1	0	1
81	M21	1	max	.845	4	3.269	2	.039	6	.002	6	0	1	0	4
82			min	-.711	5	-1.317	20	-.038	7	-.002	7	0	1	0	5
83		2	max	.108	4	.233	2	.304	7	.003	20	0	6	0	9
84			min	-.066	5	-12.62	20	-.306	6	-.002	7	0	7	0	8
85	M22	1	max	46.16	20	0	1	0	1	0	1	0	1	0	1
86			min	9.166	7	0	1	0	1	0	1	0	1	0	1
87		2	max	46.199	20	0	1	0	1	0	1	0	1	0	1

Company : Precision Surveillance Corp
Designer : Brian Giometti
Job Number : CR-N1013-101 CR3 - BT2-60 & BT5-240 USF Design Checked By: CEC

Envelope Member Section Forces (Continued)

	Member	Sec		Axial[k]	lc	y Shear[k]	lc	z Shear[k]	lc	Torque[k-ft]	lc	y-y Momen...	lc	z-z Momen...	lc
88			min	9.205	7	0	1	0	1	0	1	0	1	0	1
89	M23	1	max	50.886	20	0	1	0	1	0	1	0	1	0	1
90			min	9.14	6	0	1	0	1	0	1	0	1	0	1
91		2	max	50.925	20	0	1	0	1	0	1	0	1	0	1
92			min	9.179	6	0	1	0	1	0	1	0	1	0	1
93	M24	1	max	-.004	6	.012	6	0	1	0	1	0	1	0	1
94			min	-.004	7	.012	8	0	1	0	1	0	1	0	1
95		2	max	.004	6	-.012	6	0	1	0	1	0	1	0	1
96			min	.004	7	-.012	8	0	1	0	1	0	1	0	1
97	M25	1	max	.004	10	.012	4	0	1	0	1	0	1	0	1
98			min	.004	7	.012	12	0	1	0	1	0	1	0	1
99		2	max	-.004	10	-.012	4	0	1	0	1	0	1	0	1
100			min	-.004	7	-.012	12	0	1	0	1	0	1	0	1
101	M26	1	max	0	1	.036	5	0	1	0	6	0	1	0	1
102			min	-16.995	9	0	1	0	1	0	1	0	1	0	1
103		2	max	.047	20	0	1	0	1	0	6	0	1	0	1
104			min	-16.901	9	-.036	9	0	1	0	1	0	1	0	1
105	M27	1	max	0	3	.036	8	0	1	0	3	0	1	0	1
106			min	-16.995	8	0	3	0	1	0	7	0	1	0	1
107		2	max	.047	1	0	3	0	1	0	3	0	1	0	1
108			min	-16.901	8	-.036	2	0	1	0	7	0	1	0	1
109	M28	1	max	0	1	.036	9	0	1	0	1	0	1	0	1
110			min	-16.995	9	0	1	0	1	0	7	0	1	0	1
111		2	max	.046	20	0	1	0	1	0	1	0	1	0	1
112			min	-16.901	9	-.036	20	0	1	0	7	0	1	0	1
113	M29	1	max	0	3	.036	4	0	1	0	6	0	1	0	1
114			min	-16.995	8	0	3	0	1	0	3	0	1	0	1
115		2	max	.047	2	0	3	0	1	0	6	0	1	0	1
116			min	-16.901	8	-.036	14	0	1	0	3	0	1	0	1
117	M30	1	max	.304	11	.015	1	0	1	0	11	0	1	0	1
118			min	-7.338	7	0	6	0	1	0	7	0	1	0	1
119		2	max	.304	11	0	6	0	1	0	11	0	1	0	1
120			min	-7.338	7	-.015	7	0	1	0	7	0	1	0	1
121	M31	1	max	.311	10	.015	6	0	1	0	6	0	1	0	1
122			min	-7.312	6	0	7	0	1	0	3	0	1	0	1
123		2	max	.311	10	0	7	0	1	0	6	0	1	0	1
124			min	-7.312	6	-.015	20	0	1	0	3	0	1	0	1
125	M34	1	max	1.402	10	.175	20	3.754	9	.003	6	0	1	0	1
126			min	-1.402	11	.175	6	-3.653	8	-.003	7	0	1	0	1
127		2	max	1.4	11	-.175	20	3.653	8	.003	6	0	1	0	1
128			min	-1.405	10	-.175	6	-3.754	9	-.003	7	0	1	0	1
129	M33	1	max	9.806	9	.015	11	0	1	0	9	0	1	0	1
130			min	-9.871	8	.015	10	0	1	0	8	0	1	0	1
131		2	max	9.806	9	-.015	11	0	1	0	9	0	1	0	1
132			min	-9.871	8	-.015	10	0	1	0	8	0	1	0	1
133	M34A	1	max	9.856	8	.015	6	0	1	0	8	0	1	0	1
134			min	-9.921	9	.015	7	0	1	0	9	0	1	0	1
135		2	max	9.856	8	-.015	6	0	1	0	8	0	1	0	1
136			min	-9.921	9	-.015	7	0	1	0	9	0	1	0	1
137	M35	1	max	9.856	8	.015	6	0	1	0	9	0	1	0	1
138			min	-9.921	9	.015	7	0	1	0	8	0	1	0	1
139		2	max	9.856	8	-.015	6	0	1	0	9	0	1	0	1
140			min	-9.921	9	-.015	7	0	1	0	8	0	1	0	1
141	M36	1	max	9.806	9	.015	11	0	1	0	8	0	1	0	1
142			min	-9.871	8	.015	10	0	1	0	9	0	1	0	1
143		2	max	9.806	9	-.015	11	0	1	0	8	0	1	0	1
144			min	-9.871	8	-.015	10	0	1	0	9	0	1	0	1

Company : Precision Surveillance Corp
Designer : Brian Giometti
Job Number : CR-N1013-101 CR3 - BT2-60 & BT5-240 USF Design Checked By: CEC

Envelope AISC ASD Steel Code Checks

	Member	Shape	Code C...	Loc[ft]	lc	Shear ...	Loc[ft]	Dir	lc	Fa [ksi]	Ft [ksi]	Fb y...	Fb z-z [...	Cb	Cmy	Cmz	ASD Eqn
1	M1	W21X73	.877	11.853	20	.191	11.853	y	20	4.788	21.6	27	19.461	1	.6	.85	H1-3
2	M2	W21X73	.803	11.853	20	.169	11.853	y	20	4.788	21.6	27	19.461	1	.6	.85	H1-3
3	M3	W8X40	.486	7.018	7	.062	14.18	y	4	15.011	21.6	27	21.6	1....	1	.6	H1-3
4	M4	W8X40	.731	7.018	7	.028	14.18	z	6	15.011	21.6	27	21.6	1	1	.6	H1-1
5	M5	W8X40	.204	7.018	5	.062	14.18	y	5	15.011	21.6	27	21.6	1	.6	1	H1-3
6	M6	W8X40	.270	0	6	.006	0	z	7	15.011	21.6	27	21.6	1	.6	.6	H1-1
7	M7	W14X43	.551	2.431	11	.848	12.155	y	20	15.327	21.6	27	21.6	1	.6	.85	H2-1
8	M8	W14X43	.506	2.431	10	.769	12.154	y	20	15.328	21.6	27	21.6	1	.6	.85	H2-1
9	M9	W14X30	.204	3.788	5	.019	0	z	4	17.384	21.6	27	21.6	1	1	1	H1-3
10	M10	W14X30	.003	3.788	9	.003	0	y	7	17.384	21.6	27	21.6	1	.6	1	H1-1
11	M11	S10X25.4	.236	2.879	5	.135	7.5	z	4	13.682	21.6	27	21.6	1	1	1	H2-1
12	M12	S10X25.4	.340	3.788	2	.091	0	y	2	13.682	21.6	27	21.6	1	.6	1	H1-2
13	M13	S10X25.4	.209	3.712	6	.050	7.5	y	20	13.682	21.6	27	21.6	1	.6	1	H1-1
14	M14	W8X28	.573	3.712	20	.200	7.5	y	20	17.855	21.6	27	21.6	1	.6	1	H1-2
15	M15	W8X28	.545	3.788	20	.202	0	y	20	17.855	21.6	27	21.6	1	.6	1	H2-1
16	M16	W14X43	.275	1.894	8	.055	1.894	z	8	18.567	21.6	27	23.76	1	.6	1	H1-2
17	M17	3/4 IN WI..	.789	0	7	.026	0		7	.113	36	45	45	1....	.6	.6	H2-1
18	M18	3/4 IN WI..	.789	0	6	.027	0		6	.113	36	45	45	1....	.6	.6	H2-1
19	M19	3/4 IN WI..	.398	0	10	.015	0		6	.113	36	45	45	1....	.6	.6	H2-1
20	M20	3/4 IN WI..	.398	0	11	.016	0		7	.113	36	45	45	1....	.6	.6	H2-1
21	M21	S10X25.4	.936	11.136	20	.300	16.818	y	20	16.187	21.6	27	10.171	1	.237	1	H1-2
22	M22	TU4X4X6	.440	2.25	20	.000	0	z	1	20.683	21.6	23.76	23.76	1....	.6	.6	H1-1
23	M23	TU4X4X6	.485	2.25	20	.000	0	z	1	20.683	21.6	23.76	23.76	1....	.6	.6	H1-1
24	M24	L2X2X4	.001	7.83	6	.002	0	y	6	2.586	21.6	- Co..					H1-1
25	M25	L2X2X4	.001	0	10	.002	7.83	y	12	2.586	21.6	- Co..					H1-1
26	M26	L4X4X4	.406	0	9	.004	0	y	6	.066	21.6	- Co..					H2-1
27	M27	L4X4X4	.406	0	8	.004	0	y	7	.066	21.6	- Co..					H2-1
28	M28	L4X4X4	.406	0	9	.004	0	y	7	.066	21.6	- Co..					H2-1
29	M29	L4X4X4	.406	0	8	.004	0	y	6	.066	21.6	- Co..					H2-1
30	M30	L2X2X4	.362	0	7	.005	0	y	7	1.775	21.6	- Co..					H2-1
31	M31	L2X2X4	.361	0	6	.005	0	y	6	1.775	21.6	- Co..					H2-1
32	M34	W14X43	.274	1.894	9	.055	1.894	z	9	18.567	21.6	27	23.76	1	.6	1	H1-2
33	M33	L4X4X4	.325	0	9	.004	0	y	9	15.546	21.6	- Co..					H1-1
34	M34A	L4X4X4	.327	0	8	.003	0	y	9	15.546	21.6	- Co..					H1-1
35	M35	L4X4X4	.327	0	8	.003	0	y	9	15.546	21.6	- Co..					H1-1
36	M36	L4X4X4	.325	0	9	.004	0	y	9	15.546	21.6	- Co..					H1-1

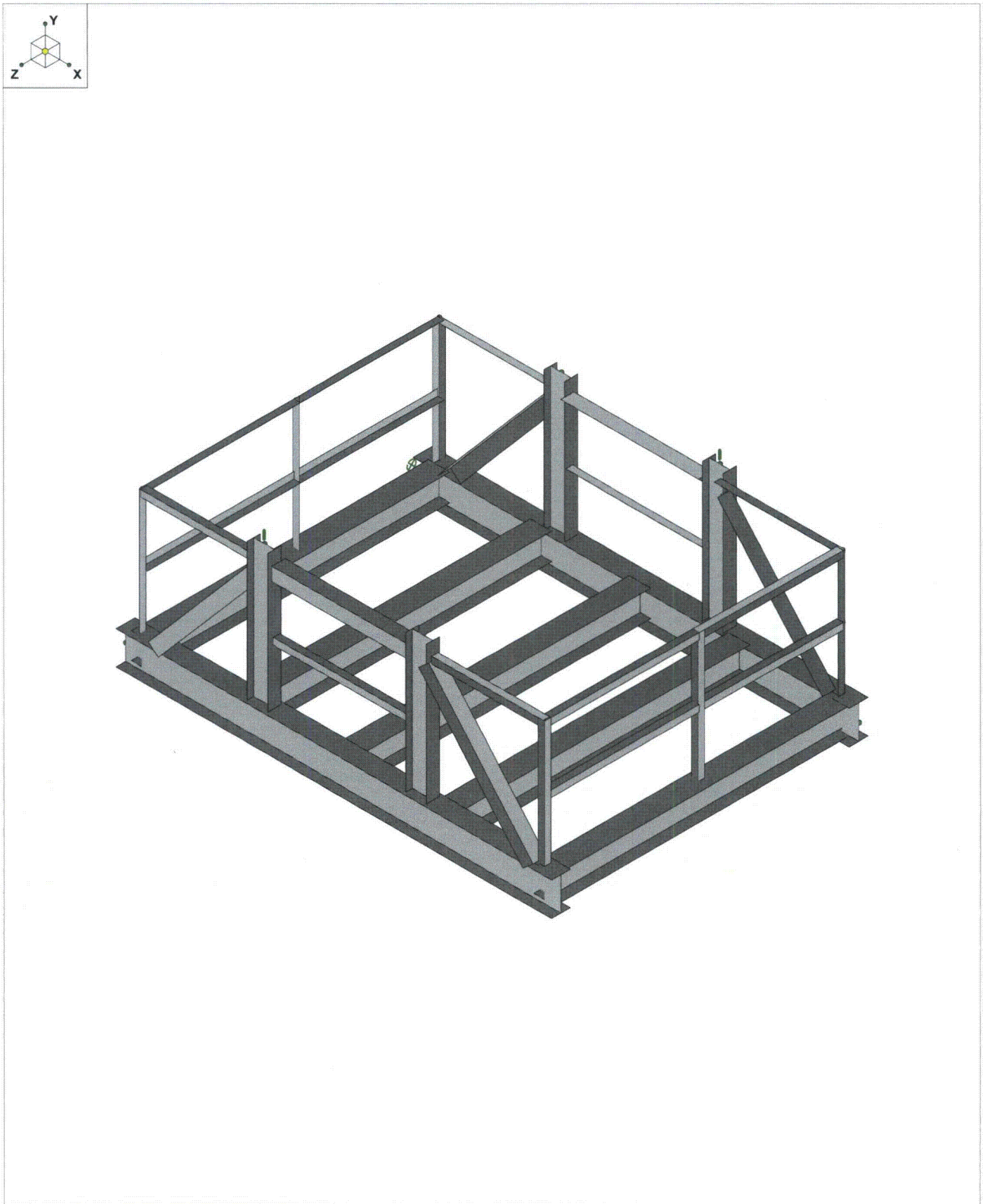

Precision Surveillance Co...	CR3: BT2-60 & BT5-240 Work Platform Design	
Brian Giometti		
CR-N1013-102		CR-N1013-102 BT2-60.BT5-240 ...

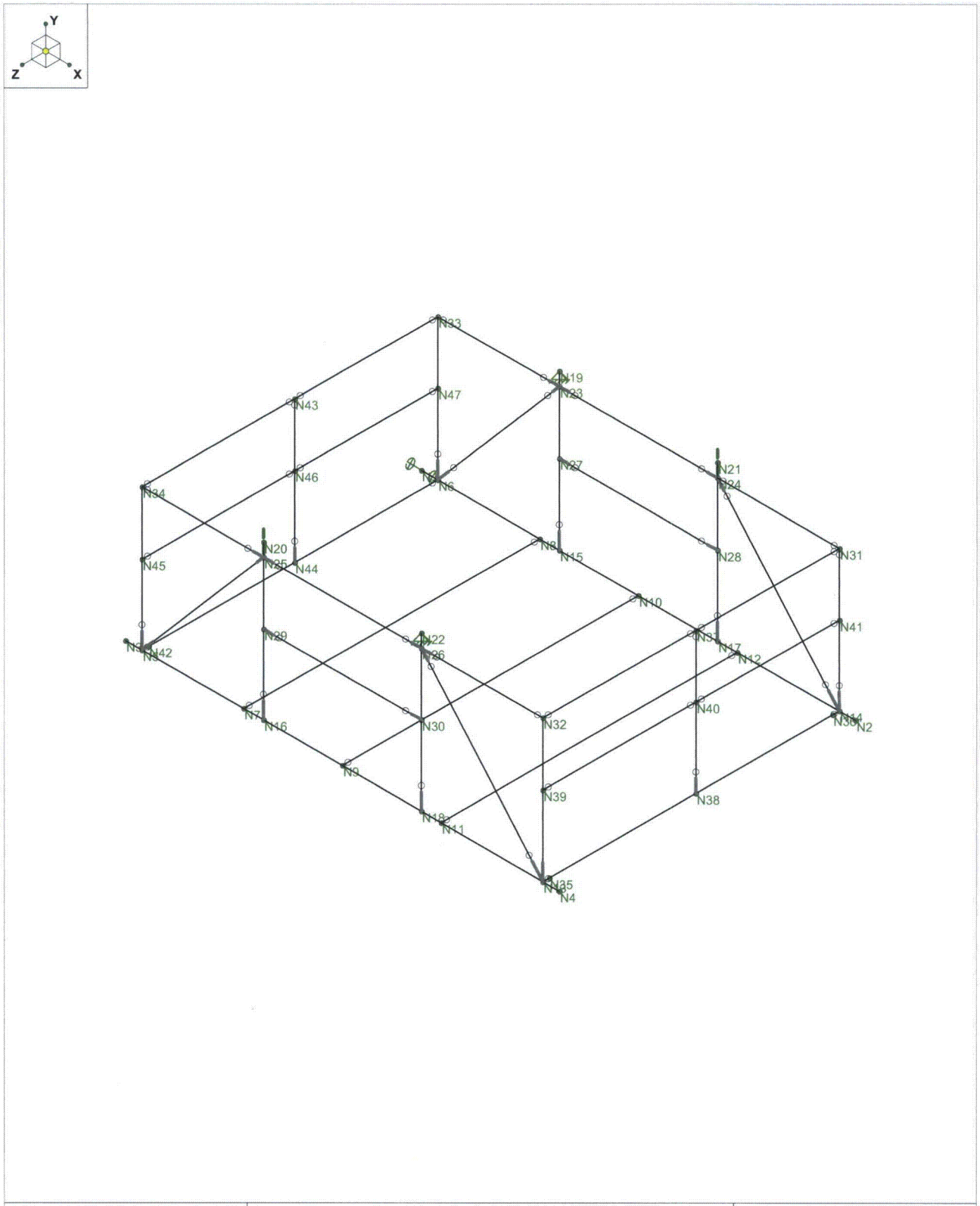

Precision Surveillance Co...	CR3: BT2-60 & BT5-240 Work Platform Design	
Brian Giometti		
CR-N1013-102		CR-N1013-102 BT2-60.BT5-240 ...

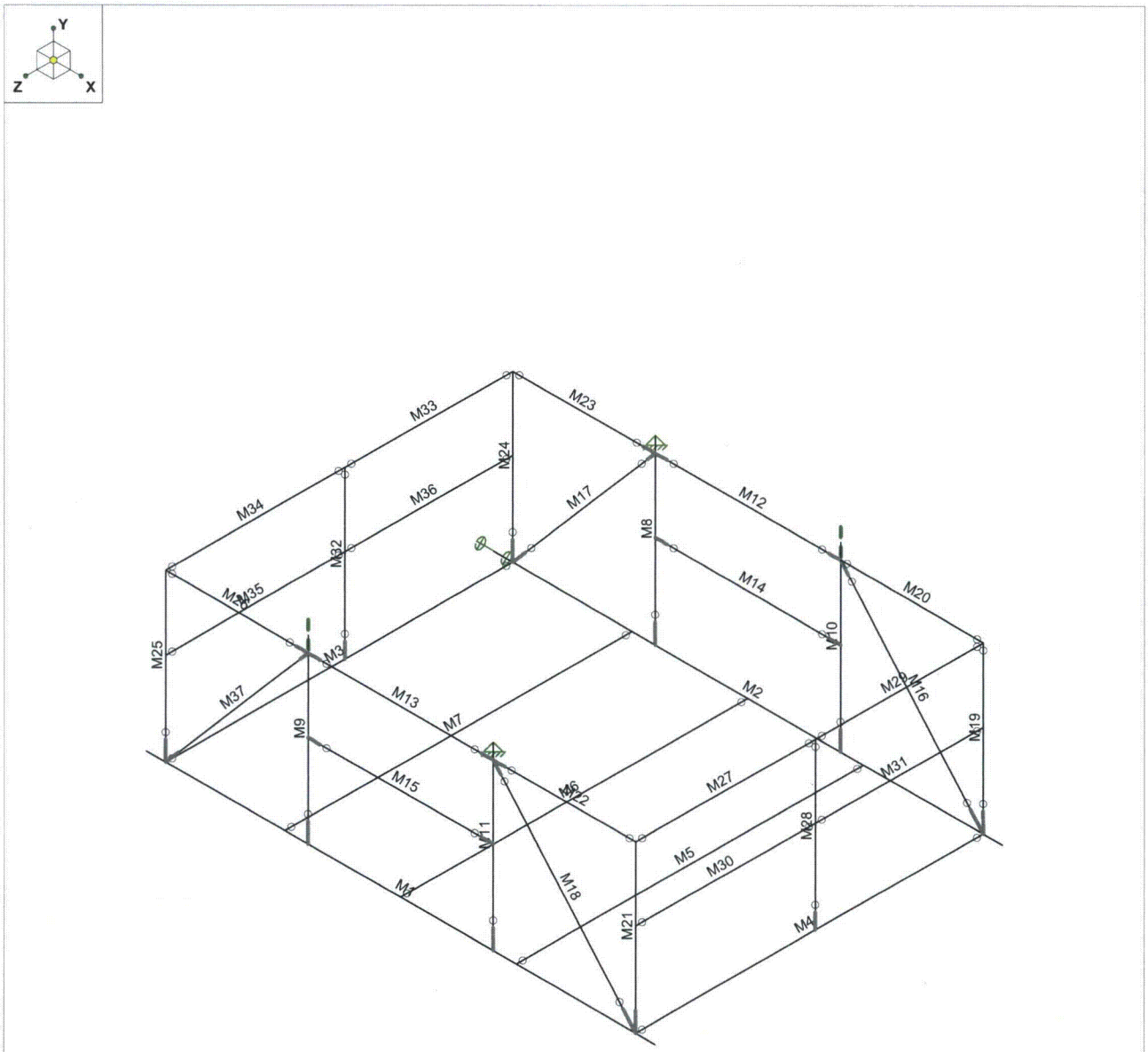

Precision Surveillance Co...	CR3: BT2-60 & BT5-240 Work Platform Design	
Brian Giometti		
CR-N1013-102		CR-N1013-102 BT2-60.BT5-240 ...

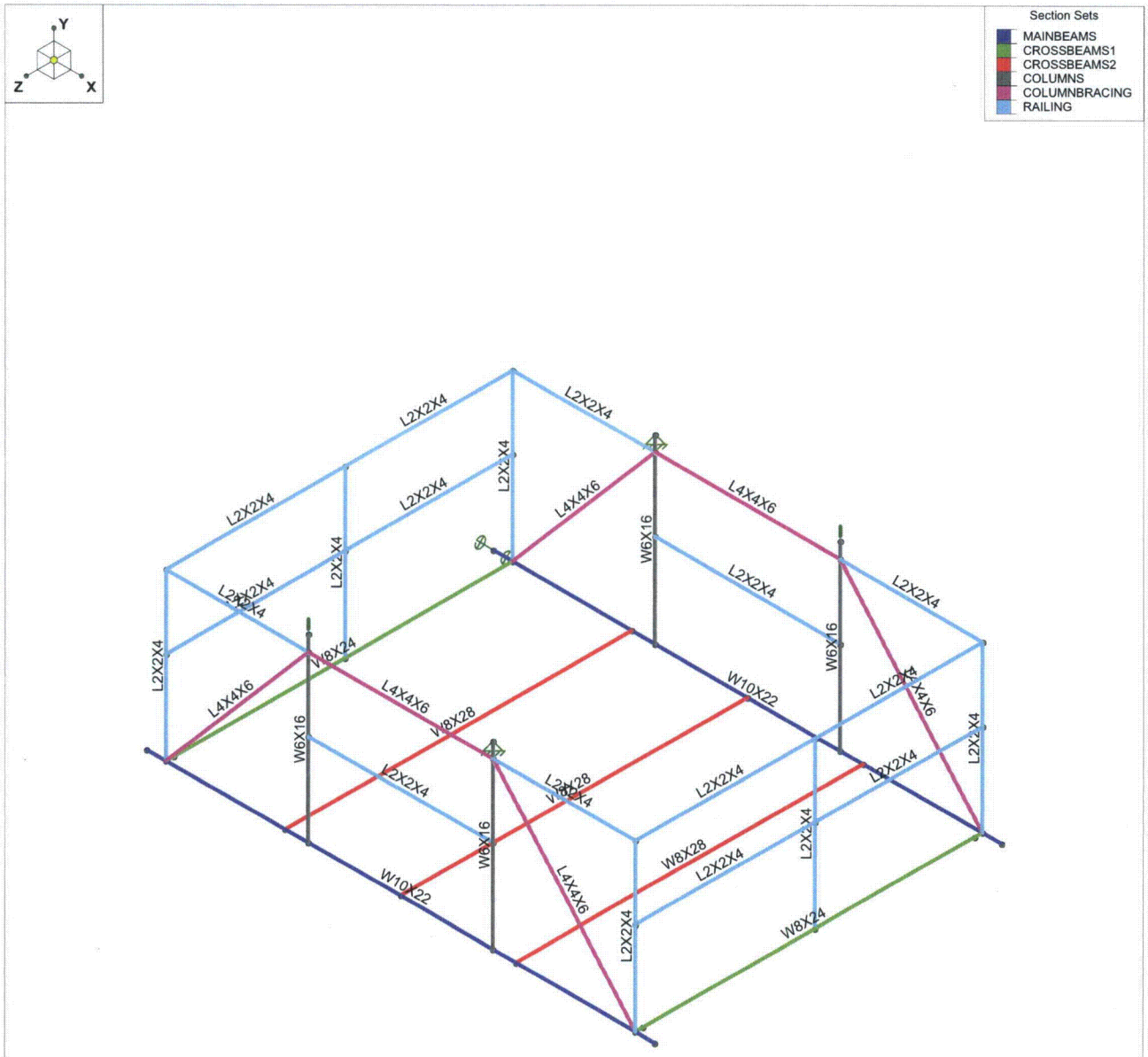

Precision Surveillance Co...	CR3: BT2-60 & BT5-240 Work Platform Design	
Brian Giometti		
CR-N1013-102		CR-N1013-102 BT2-60.BT5-240 ...

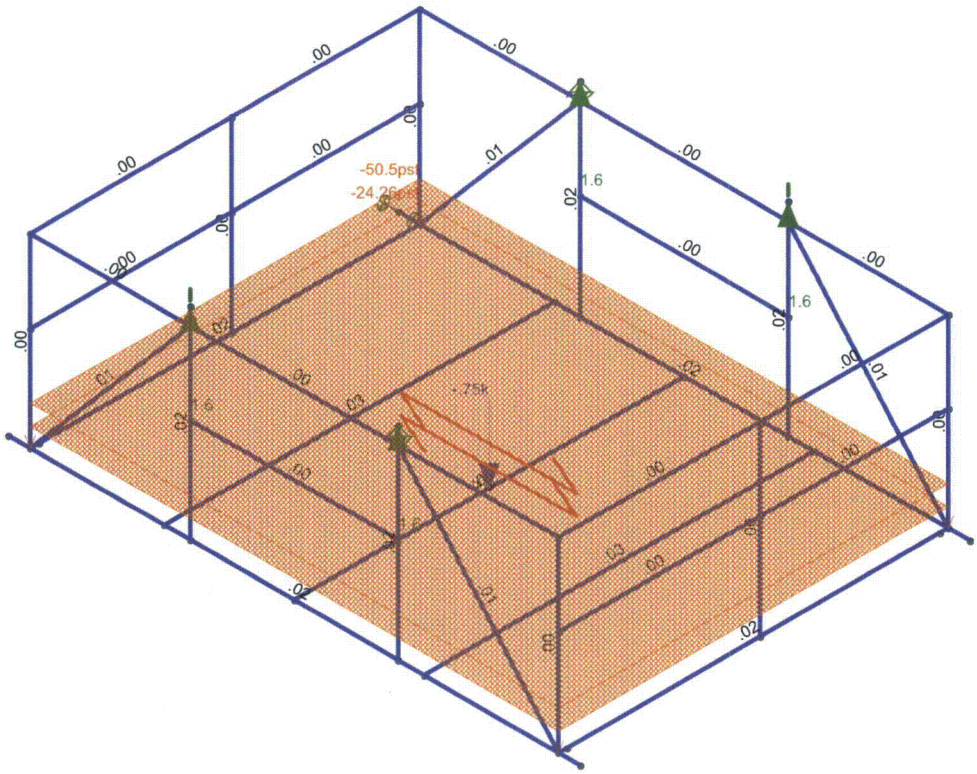

Member Code Checks Displayed
Loads: LC 1, DL+LL+OL1
Results for LC 1, DL+LL+OL1
Reaction units are k and k-ft

Precision Surveillance Co...	CR3: BT2-60 & BT5-240 Work Platform Design	
Brian Giometti		
CR-N1013-102		CR-N1013-102 BT2-60.BT5-240 ...

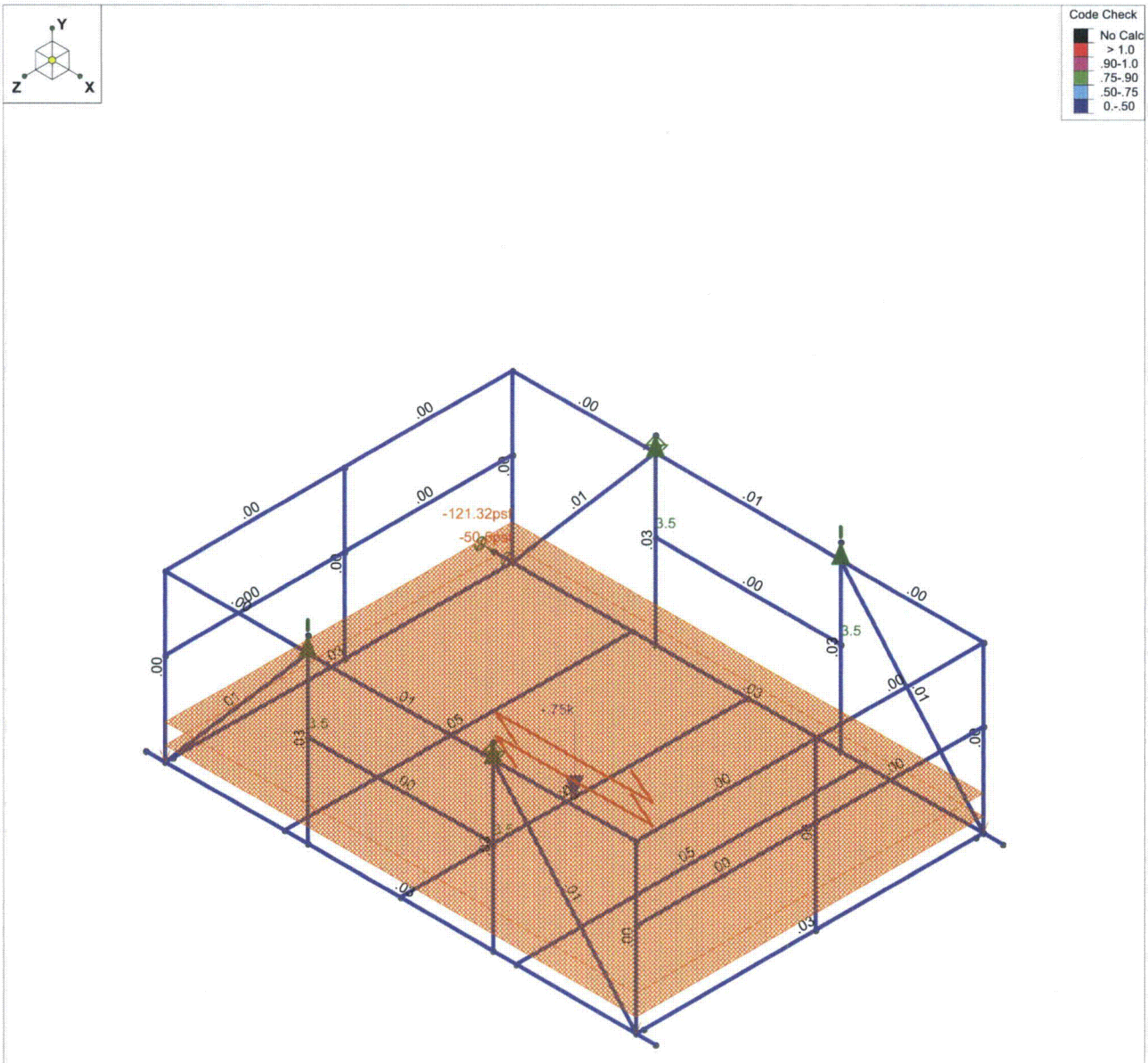

Member Code Checks Displayed
Loads: LC 2, DL+5LL(LLS)+OL1
Results for LC 2, DL+5LL(LLS)+OL1
Reaction units are k and k-ft

Precision Surveillance Co...	CR3: BT2-60 & BT5-240 Work Platform Design	
Brian Giometti		
CR-N1013-102		CR-N1013-102 BT2-60.BT5-240 ...

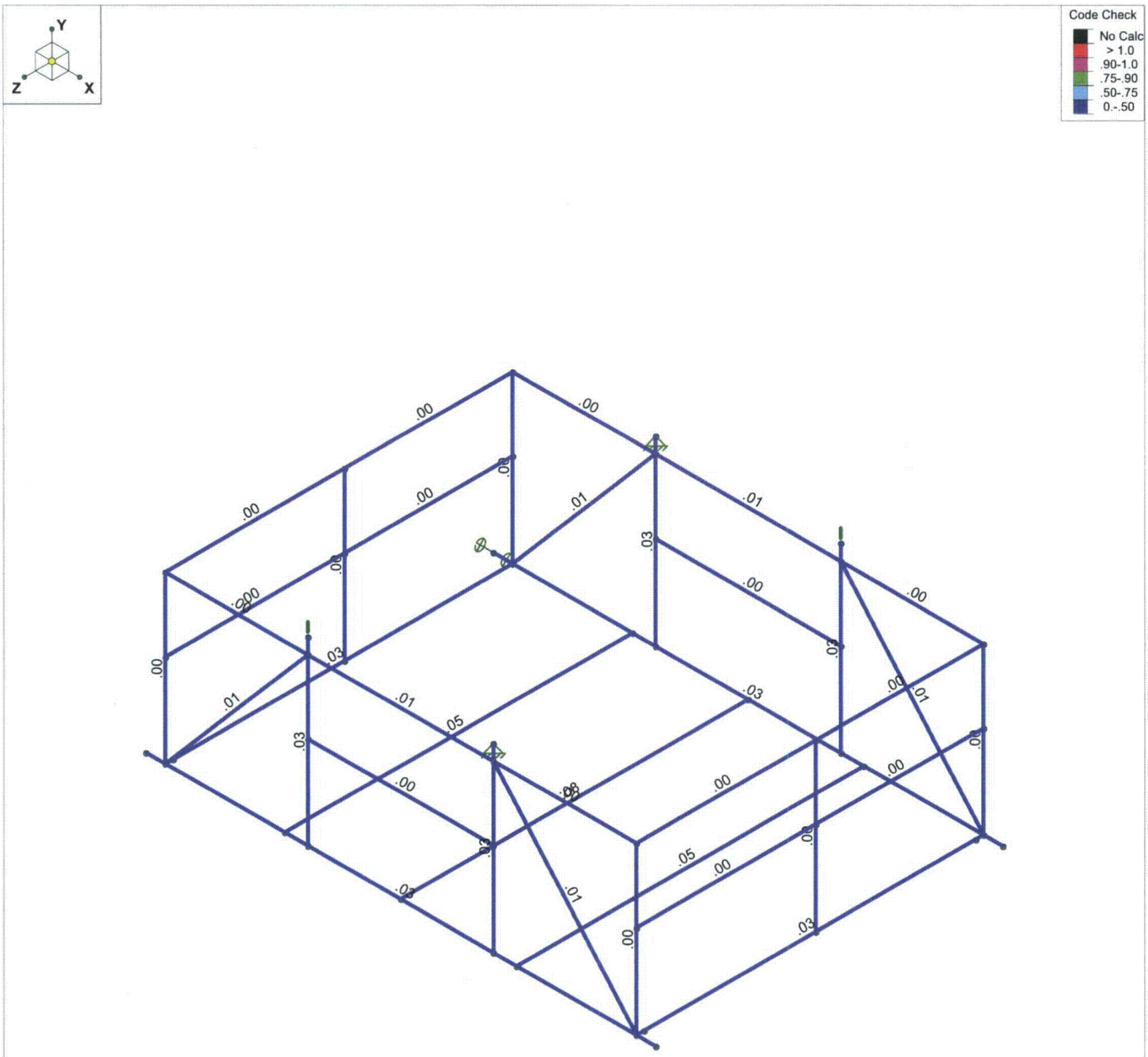

Member Code Checks Displayed
Solution: Envelope

Precision Surveillance Co...	CR3: BT2-60 & BT5-240 Work Platform Design	
Brian Giometti		
CR-N1013-102		CR-N1013-102 BT2-60.BT5-240 ...

Company : Precision Surveillance Corp.
Designer : Brian Giometti
Job Number : CR-N1013-102 CR3: BT2-60 & BT5-240 Work Platform Design Checked By: CEC

Global

Display Sections for Member Calcs	3
Max Internal Sections for Member Calcs	99
Include Shear Deformation	Yes
Include Warping	Yes
Area Load Mesh (in^2)	144
Merge Tolerance (in)	12
P-Delta Analysis Tolerance	0.50%
Vertical Axis	Y

Hot Rolled Steel Code	AISC: ASD 9th
Cold Formed Steel Code	AISI 99: ASD
Wood Code	NDS 91/97: ASD
Wood Temperature	< 100F
Concrete Code	ACI 1999

Number of Shear Regions	4
Region Spacing Increment (in)	4
Biaxial Column Method	PCA Load Contour
Parme Beta Factor (PCA)	65
Concrete Stress Block	Rectangular
Use Cracked Sections	Yes
Bad Framing Warnings	No
Unused Force Warnings	Yes

Hot Rolled Steel Properties

	Label	E [ksi]	G [ksi]	Nu	Therm (\1E5 F)	Density[k/ft^3]	Yield[ksi]
1	HR_STL	29000	11154	.3	.65	.49	36

Material Takeoff

	Material	Size	Pieces	Length[ft]	Weight[K]
1	Hot Rolled Steel				
2	HR_STL	L2X2X4	20	67.7	.2
3	HR_STL	L4X4X6	6	23.1	.2
4	HR_STL	W10X22	2	22	.5
5	HR_STL	W6X16	4	14	.2
6	HR_STL	W8X24	2	15	.4
7	HR_STL	W8X28	3	22.5	.6
8	Total HR Steel		37	164.3	2.1

Hot Rolled Steel Section Sets

	Label	Shape	Type	Design List	Material	Design Rules	A [in2]	Iyy [in4]	Izz [in4]	J [in4]
1	MAINBEAMS	W10X22	Beam	Wide Flange	HR_STL	Typical	6.49	11.4	118	.24
2	CROSSBEAMS1	W8X24	Beam	Wide Flange	HR_STL	Typical	7.08	18.3	82.8	.35
3	CROSSBEAMS2	W8X28	Beam	Wide Flange	HR_STL	Typical	8.25	21.7	98	.54
4	COLUMNS	W6X16	Beam	Wide Flange	HR_STL	Typical	4.74	4.43	32.1	.22
5	COLUMNBRACING	L4X4X6	Beam	Single Angle	HR_STL	Typical	2.86	4.36	4.36	.141
6	RAILING	L2X2X4	Beam	Single Angle	HR_STL	Typical	.938	.348	.348	.02

Member Primary Data

	Label	I Joint	J Joint	K Joint	Rotate(deg)	Section/Shape	Type	Design List	Material	Design Rules
1	M1	N3	N4			MAINBEAMS	Beam	Wide Flange	HR_STL	Typical
2	M2	N1	N2			MAINBEAMS	Beam	Wide Flange	HR_STL	Typical

Company : Precision Surveillance Corp.
Designer : Brian Giometti
Job Number : CR-N1013-102 CR3: BT2-60 & BT5-240 Work Platform Design Checked By: CEC

Member Primary Data (Continued)

	Label	I Joint	J Joint	K Joint	Rotate(deg)	Section/Shape	Type	Design List	Material	Design Rules
3	M3	N5	N6			CROSSBEAM...	Beam	Wide Flange	HR_STL	Typical
4	M4	N13	N14			CROSSBEAM...	Beam	Wide Flange	HR_STL	Typical
5	M5	N11	N12			CROSSBEAM...	Beam	Wide Flange	HR_STL	Typical
6	M6	N9	N10			CROSSBEAM...	Beam	Wide Flange	HR_STL	Typical
7	M7	N7	N8			CROSSBEAM...	Beam	Wide Flange	HR_STL	Typical
8	M8	N15	N19			COLUMNS	Beam	Wide Flange	HR_STL	Typical
9	M9	N16	N20			COLUMNS	Beam	Wide Flange	HR_STL	Typical
10	M10	N17	N21			COLUMNS	Beam	Wide Flange	HR_STL	Typical
11	M11	N18	N22			COLUMNS	Beam	Wide Flange	HR_STL	Typical
12	M12	N23	N24		90	COLUMNBRA...	Beam	Single Angle	HR_STL	Typical
13	M13	N25	N26		180	COLUMNBRA...	Beam	Single Angle	HR_STL	Typical
14	M14	N27	N28		90	RAILING	Beam	Single Angle	HR_STL	Typical
15	M15	N29	N30		180	RAILING	Beam	Single Angle	HR_STL	Typical
16	M16	N14	N24		180	COLUMNBRA...	Beam	Single Angle	HR_STL	Typical
17	M17	N6	N23		90	COLUMNBRA...	Beam	Single Angle	HR_STL	Typical
18	M18	N13	N26		90	COLUMNBRA...	Beam	Single Angle	HR_STL	Typical
19	M19	N14	N31			RAILING	Beam	Single Angle	HR_STL	Typical
20	M20	N31	N24		180	RAILING	Beam	Single Angle	HR_STL	Typical
21	M21	N13	N32		270	RAILING	Beam	Single Angle	HR_STL	Typical
22	M22	N32	N26		90	RAILING	Beam	Single Angle	HR_STL	Typical
23	M23	N33	N23		90	RAILING	Beam	Single Angle	HR_STL	Typical
24	M24	N6	N33		90	RAILING	Beam	Single Angle	HR_STL	Typical
25	M25	N5	N34		180	RAILING	Beam	Single Angle	HR_STL	Typical
26	M26	N34	N25		180	RAILING	Beam	Single Angle	HR_STL	Typical
27	M27	N32	N37		180	RAILING	Beam	Single Angle	HR_STL	Typical
28	M28	N38	N37		270	RAILING	Beam	Single Angle	HR_STL	Typical
29	M29	N31	N37		90	RAILING	Beam	Single Angle	HR_STL	Typical
30	M30	N39	N40		180	RAILING	Beam	Single Angle	HR_STL	Typical
31	M31	N40	N41		180	RAILING	Beam	Single Angle	HR_STL	Typical
32	M32	N44	N43		180	RAILING	Beam	Single Angle	HR_STL	Typical
33	M33	N33	N43		180	RAILING	Beam	Single Angle	HR_STL	Typical
34	M34	N43	N34		180	RAILING	Beam	Single Angle	HR_STL	Typical
35	M35	N45	N46			RAILING	Beam	Single Angle	HR_STL	Typical
36	M36	N46	N47			RAILING	Beam	Single Angle	HR_STL	Typical
37	M37	N5	N25		180	COLUMNBRA...	Beam	Single Angle	HR_STL	Typical

Member Advanced Data

	Label	I Release	J Release	I Offset[in]	J Offset[in]	T/C Only	Physical	TOM	Inactive
1	M1						Yes		
2	M2						Yes		
3	M3	BenPIN	BenPIN				Yes		
4	M4	BenPIN	BenPIN				Yes		
5	M5	BenPIN	BenPIN				Yes		
6	M6	BenPIN	BenPIN				Yes		
7	M7	BenPIN	BenPIN				Yes		
8	M8	BenPIN		M2			Yes		
9	M9	BenPIN		M1			Yes		
10	M10	BenPIN		M2			Yes		
11	M11	BenPIN		M1			Yes		
12	M12	BenPIN	BenPIN	M8	M10		Yes	Yes	
13	M13	BenPIN	BenPIN	M9	M11		Yes	Yes	
14	M14	BenPIN	BenPIN	M8	M10		Yes	Yes	
15	M15	BenPIN	BenPIN	M9	M11		Yes	Yes	
16	M16	BenPIN	BenPIN	M2	M10		Yes	Yes	
17	M17	BenPIN	BenPIN	M2	M8		Yes	Yes	
18	M18	BenPIN	BenPIN	M1	M11		Yes	Yes	

Company : Precision Surveillance Corp.
Designer : Brian Giometti
Job Number : CR-N1013-102 CR3: BT2-60 & BT5-240 Work Platform Design Checked By: CEC

Member Advanced Data (Continued)

	Label	I Release	J Release	I Offset[in]	J Offset[in]	T/C Only	Physical	TOM	Inactive
19	M19	BenPIN	BenPIN	M2			Yes	Yes	
20	M20	BenPIN	BenPIN				Yes	Yes	
21	M21			M1			Yes	Yes	
22	M22	BenPIN	BenPIN		M11		Yes	Yes	
23	M23	BenPIN	BenPIN		M8		Yes	Yes	
24	M24	BenPIN		M2			Yes	Yes	
25	M25	BenPIN		M1			Yes	Yes	
26	M26	BenPIN	BenPIN		M9		Yes	Yes	
27	M27	BenPIN	BenPIN				Yes	Yes	
28	M28	BenPIN	BenPIN	M4			Yes	Yes	
29	M29	BenPIN	BenPIN				Yes	Yes	
30	M30	BenPIN	BenPIN				Yes	Yes	
31	M31	BenPIN	BenPIN				Yes	Yes	
32	M32	BenPIN	BenPIN	M3			Yes	Yes	
33	M33	BenPIN	BenPIN				Yes	Yes	
34	M34	BenPIN	BenPIN				Yes	Yes	
35	M35	BenPIN	BenPIN				Yes	Yes	
36	M36	BenPIN	BenPIN				Yes	Yes	
37	M37			M1	M9		Yes	Yes	

Joint Coordinates and Temperatures

	Label	X [ft]	Y [ft]	Z [ft]	Temp [F]	Detach From Diap...
1	N1	0	0	0	0	
2	N2	11	0	0	0	
3	N3	0	0	7.5	0	
4	N4	11	0	7.5	0	
5	N5	.417	0	7.5	0	
6	N6	.417	0	0	0	
7	N7	3	0	7.5	0	
8	N8	3	0	0	0	
9	N9	5.5	0	7.5	0	
10	N10	5.5	0	0	0	
11	N11	8	0	7.5	0	
12	N12	8	0	0	0	
13	N13	10.583	0	7.5	0	
14	N14	10.583	0	0	0	
15	N15	3.5	0	0	0	
16	N16	3.5	0	7.5	0	
17	N17	7.5	0	0	0	
18	N18	7.5	0	7.5	0	
19	N19	3.5	3.924	0	0	
20	N20	3.5	3.924	7.5	0	
21	N21	7.5	3.924	0	0	
22	N22	7.5	3.924	7.5	0	
23	N23	3.5	3.59	0	0	
24	N24	7.5	3.59	0	0	
25	N25	3.5	3.59	7.5	0	
26	N26	7.5	3.59	7.5	0	
27	N27	3.5	2.007	0	0	
28	N28	7.5	2.007	0	0	
29	N29	3.5	2.007	7.5	0	
30	N30	7.5	2.007	7.5	0	
31	N31	10.583	3.59	0	0	
32	N32	10.583	3.59	7.5	0	
33	N33	.417	3.59	0	0	
34	N34	.417	3.59	7.5	0	

Company : Precision Surveillance Corp.
Designer : Brian Giometti
Job Number : CR-N1013-102 CR3: BT2-60 & BT5-240 Work Platform Design Checked By: CEC

Joint Coordinates and Temperatures (Continued)

	Label	X [ft]	Y [ft]	Z [ft]	Temp [F]	Detach From Diap...
35	N35	10.583	0	7.333	0	
36	N36	10.583	0	.167	0	
37	N37	10.583	3.59	3.625	0	
38	N38	10.583	0	3.625	0	
39	N39	10.583	2.007	7.5	0	
40	N40	10.583	2.007	3.625	0	
41	N41	10.583	2.007	0	0	
42	N42	.417	0	7.333	0	
43	N43	.417	3.59	3.625	0	
44	N44	.417	0	3.625	0	
45	N45	.417	2.007	7.5	0	
46	N46	.417	2.007	3.625	0	
47	N47	.417	2.007	0	0	

Joint Boundary Conditions

	Joint Label	X [k/in]	Y [k/in]	Z [k/in]	X Rot.[k-ft/rad]	Y Rot.[k-ft/rad]	Z Rot.[k-ft/rad]	Footing
1	N20		Reaction					
2	N22	Reaction	Reaction	Reaction				
3	N21		Reaction					
4	N19	Reaction	Reaction	Reaction				
5	N1				Reaction			
6	N25							
7	N24							
8	N23							
9	N26							

Hot Rolled Steel Design Parameters

	Label	Shape	Length...	Lbyy[ft]	Lbzz[ft]	Lcomp to...	Lcomp b...	Kyy	Kzz	Cm-yy	Cm-zz	Cb	y sway	z sway	Function
1	M1	MAINBE...	11												Lateral
2	M2	MAINBE...	11												Lateral
3	M3	CROSSB...	7.5												Lateral
4	M4	CROSSB...	7.5												Lateral
5	M5	CROSSB...	7.5												Lateral
6	M6	CROSSB...	7.5												Lateral
7	M7	CROSSB...	7.5												Lateral
8	M8	COLUMNS	3.924												Lateral
9	M9	COLUMNS	3.924												Lateral
10	M10	COLUMNS	3.924												Lateral
11	M11	COLUMNS	3.924												Lateral
12	M12	COLUMN...	4												Lateral
13	M13	COLUMN...	4												Lateral
14	M14	RAILING	4												Lateral
15	M15	RAILING	4												Lateral
16	M16	COLUMN...	4.732												Lateral
17	M17	COLUMN...	4.732												Lateral
18	M18	COLUMN...	4.732												Lateral
19	M19	RAILING	3.59			0	0								Lateral
20	M20	RAILING	3.083			0	0								Lateral
21	M21	RAILING	3.59			0	0								Lateral
22	M22	RAILING	3.083			0	0								Lateral
23	M23	RAILING	3.083			0	0								Lateral
24	M24	RAILING	3.59			0	0								Lateral
25	M25	RAILING	3.59			0	0								Lateral
26	M26	RAILING	3.083			0	0								Lateral
27	M27	RAILING	3.875			0	0								Lateral

Company : Precision Surveillance Corp.
Designer : Brian Giometti
Job Number : CR-N1013-102 CR3: BT2-60 & BT5-240 Work Platform Design Checked By: CEC

Hot Rolled Steel Design Parameters (Continued)

	Label	Shape	Length...	Lbyy[ft]	Lbzz[ft]	Lcomp to...	Lcomp b...	Kyy	Kzz	Cm-yy	Cm-zz	Cb	y sway	z sway	Function
28	M28	RAILING	3.59			0	0								Lateral
29	M29	RAILING	3.625			0	0								Lateral
30	M30	RAILING	3.875			0	0								Lateral
31	M31	RAILING	3.625			0	0								Lateral
32	M32	RAILING	3.59			0	0								Lateral
33	M33	RAILING	3.625			0	0								Lateral
34	M34	RAILING	3.875			0	0								Lateral
35	M35	RAILING	3.875			0	0								Lateral
36	M36	RAILING	3.625			0	0								Lateral
37	M37	COLUMN...	4.732												Lateral

Joint Loads and Enforced Displacements

Joint Label	L,D,M	Direction	Magnitude[(k,k-ft), (in,rad), (k*s^2/f...
No Data to Print ...			

Member Point Loads (BLC 3 : HYDRAULIC PUMP)

	Member Label	Direction	Magnitude[k,k-ft]	Location[ft,%]
1	M6	y	-.75	%50

Member Distributed Loads (BLC 5 : BLC 1 Transient Area Loads)

	Member Label	Direction	Start Magnitude[k/ft,...	End Magnitude[k/ft,d...	Start Location[ft,%]	End Location[ft,%]
1	M3	Y	-.08	-.08	6.75	7.5
2	M4	Y	-.08	-.08	0	.75
3	M4	Y	-.04	-.04	.75	1.5
4	M4	Y	-.08	-.08	1.5	2.25
5	M4	Y	-.04	-.04	2.25	3
6	M4	Y	-.08	-.08	3	3.75
7	M4	Y	-.08	-.08	3.75	4.5
8	M4	Y	-.04	-.04	4.5	5.25
9	M4	Y	-.08	-.08	5.25	6
10	M4	Y	-.04	-.04	6	6.75
11	M4	Y	-.08	-.08	6.75	7.5
12	M5	Y	-.16	-.16	1.5	2.25
13	M5	Y	-.08	-.08	2.25	3
14	M5	Y	-.16	-.16	3	3.75
15	M5	Y	-.16	-.16	3.75	4.5
16	M5	Y	-.08	-.08	4.5	5.25
17	M5	Y	-.16	-.16	5.25	6
18	M5	Y	-.08	-.08	6	6.75
19	M5	Y	-.16	-.16	6.75	7.5
20	M6	Y	-.16	-.16	3	3.75
21	M6	Y	-.16	-.16	3.75	4.5
22	M6	Y	-.08	-.08	4.5	5.25
23	M6	Y	-.16	-.16	5.25	6
24	M6	Y	-.08	-.08	6	6.75
25	M6	Y	-.16	-.16	6.75	7.5
26	M7	Y	-.16	-.16	5.25	6
27	M7	Y	-.08	-.08	6	6.75
28	M7	Y	-.16	-.16	6.75	7.5
29	M3	Y	-.08	-.08	0	.75
30	M3	Y	-.04	-.04	.75	1.5
31	M3	Y	-.08	-.08	1.5	2.25
32	M3	Y	-.04	-.04	2.25	3

Company : Precision Surveillance Corp.
Designer : Brian Giometti
Job Number : CR-N1013-102 CR3: BT2-60 & BT5-240 Work Platform Design Checked By: CEC

Member Distributed Loads (BLC 5 : BLC 1 Transient Area Loads) (Continued)

	Member Label	Direction	Start Magnitude[k/ft,...	End Magnitude[k/ft,d...	Start Location[ft,%]	End Location[ft,%]
33	M3	Y	-.08	-.08	3	3.75
34	M3	Y	-.08	-.08	3.75	4.5
35	M3	Y	-.04	-.04	4.5	5.25
36	M3	Y	-.08	-.08	5.25	6
37	M3	Y	-.04	-.04	6	6.75
38	M5	Y	-.16	-.16	0	.75
39	M5	Y	-.08	-.08	.75	1.5
40	M6	Y	-.16	-.16	0	.75
41	M6	Y	-.08	-.08	.75	1.5
42	M6	Y	-.16	-.16	1.5	2.25
43	M6	Y	-.08	-.08	2.25	3
44	M7	Y	-.16	-.16	0	.75
45	M7	Y	-.08	-.08	.75	1.5
46	M7	Y	-.16	-.16	1.5	2.25
47	M7	Y	-.08	-.08	2.25	3
48	M7	Y	-.16	-.16	3	3.75
49	M7	Y	-.16	-.16	3.75	4.5
50	M7	Y	-.08	-.08	4.5	5.25

Member Distributed Loads (BLC 6 : BLC 2 Transient Area Loads)

	Member Label	Direction	Start Magnitude[k/ft,...	End Magnitude[k/ft,d...	Start Location[ft,%]	End Location[ft,%]
1	M3	Y	-.039	-.039	6.75	7.5
2	M4	Y	-.039	-.039	0	.75
3	M4	Y	-.019	-.019	.75	1.5
4	M4	Y	-.039	-.039	1.5	2.25
5	M4	Y	-.019	-.019	2.25	3
6	M4	Y	-.039	-.039	3	3.75
7	M4	Y	-.039	-.039	3.75	4.5
8	M4	Y	-.019	-.019	4.5	5.25
9	M4	Y	-.039	-.039	5.25	6
10	M4	Y	-.019	-.019	6	6.75
11	M4	Y	-.039	-.039	6.75	7.5
12	M5	Y	-.077	-.077	1.5	2.25
13	M5	Y	-.039	-.039	2.25	3
14	M5	Y	-.077	-.077	3	3.75
15	M5	Y	-.077	-.077	3.75	4.5
16	M5	Y	-.039	-.039	4.5	5.25
17	M5	Y	-.077	-.077	5.25	6
18	M5	Y	-.039	-.039	6	6.75
19	M5	Y	-.077	-.077	6.75	7.5
20	M6	Y	-.077	-.077	3	3.75
21	M6	Y	-.077	-.077	3.75	4.5
22	M6	Y	-.039	-.039	4.5	5.25
23	M6	Y	-.077	-.077	5.25	6
24	M6	Y	-.039	-.039	6	6.75
25	M6	Y	-.077	-.077	6.75	7.5
26	M7	Y	-.077	-.077	5.25	6
27	M7	Y	-.039	-.039	6	6.75
28	M7	Y	-.077	-.077	6.75	7.5
29	M3	Y	-.039	-.039	0	.75
30	M3	Y	-.019	-.019	.75	1.5
31	M3	Y	-.039	-.039	1.5	2.25
32	M3	Y	-.019	-.019	2.25	3
33	M3	Y	-.039	-.039	3	3.75
34	M3	Y	-.039	-.039	3.75	4.5
35	M3	Y	-.019	-.019	4.5	5.25
36	M3	Y	-.039	-.039	5.25	6

Company : Precision Surveillance Corp.
Designer : Brian Giometti
Job Number : CR-N1013-102 CR3: BT2-60 & BT5-240 Work Platform Design Checked By: CEC

Member Distributed Loads (BLC 6 : BLC 2 Transient Area Loads) (Continued)

	Member Label	Direction	Start Magnitude[k/ft,...	End Magnitude[k/ft,d...	Start Location[ft,%]	End Location[ft,%]
37	M3	Y	-.019	-.019	6	6.75
38	M5	Y	-.077	-.077	0	.75
39	M5	Y	-.039	-.039	.75	1.5
40	M6	Y	-.077	-.077	0	.75
41	M6	Y	-.039	-.039	.75	1.5
42	M6	Y	-.077	-.077	1.5	2.25
43	M6	Y	-.039	-.039	2.25	3
44	M7	Y	-.077	-.077	0	.75
45	M7	Y	-.039	-.039	.75	1.5
46	M7	Y	-.077	-.077	1.5	2.25
47	M7	Y	-.039	-.039	2.25	3
48	M7	Y	-.077	-.077	3	3.75
49	M7	Y	-.077	-.077	3.75	4.5
50	M7	Y	-.039	-.039	4.5	5.25

Member Distributed Loads (BLC 7 : BLC 4 Transient Area Loads)

	Member Label	Direction	Start Magnitude[k/ft,...	End Magnitude[k/ft,d...	Start Location[ft,%]	End Location[ft,%]
1	M3	Y	-.193	-.193	6.75	7.5
2	M4	Y	-.193	-.193	0	.75
3	M4	Y	-.096	-.096	.75	1.5
4	M4	Y	-.193	-.193	1.5	2.25
5	M4	Y	-.096	-.096	2.25	3
6	M4	Y	-.193	-.193	3	3.75
7	M4	Y	-.193	-.193	3.75	4.5
8	M4	Y	-.096	-.096	4.5	5.25
9	M4	Y	-.193	-.193	5.25	6
10	M4	Y	-.096	-.096	6	6.75
11	M4	Y	-.193	-.193	6.75	7.5
12	M5	Y	-.385	-.385	1.5	2.25
13	M5	Y	-.193	-.193	2.25	3
14	M5	Y	-.385	-.385	3	3.75
15	M5	Y	-.385	-.385	3.75	4.5
16	M5	Y	-.193	-.193	4.5	5.25
17	M5	Y	-.385	-.385	5.25	6
18	M5	Y	-.193	-.193	6	6.75
19	M5	Y	-.385	-.385	6.75	7.5
20	M6	Y	-.385	-.385	3	3.75
21	M6	Y	-.385	-.385	3.75	4.5
22	M6	Y	-.193	-.193	4.5	5.25
23	M6	Y	-.385	-.385	5.25	6
24	M6	Y	-.193	-.193	6	6.75
25	M6	Y	-.385	-.385	6.75	7.5
26	M7	Y	-.385	-.385	5.25	6
27	M7	Y	-.193	-.193	6	6.75
28	M7	Y	-.385	-.385	6.75	7.5
29	M3	Y	-.193	-.193	0	.75
30	M3	Y	-.096	-.096	.75	1.5
31	M3	Y	-.193	-.193	1.5	2.25
32	M3	Y	-.096	-.096	2.25	3
33	M3	Y	-.193	-.193	3	3.75
34	M3	Y	-.193	-.193	3.75	4.5
35	M3	Y	-.096	-.096	4.5	5.25
36	M3	Y	-.193	-.193	5.25	6
37	M3	Y	-.096	-.096	6	6.75
38	M5	Y	-.385	-.385	0	.75
39	M5	Y	-.193	-.193	.75	1.5
40	M6	Y	-.385	-.385	0	.75

Company : Precision Surveillance Corp.
Designer : Brian Giometti
Job Number : CR-N1013-102 CR3: BT2-60 & BT5-240 Work Platform Design Checked By: CEC

Member Distributed Loads (BLC 7 : BLC 4 Transient Area Loads) (Continued)

	Member Label	Direction	Start Magnitude[k/ft,...	End Magnitude[k/ft,d...	Start Location[ft,%]	End Location[ft,%]
41	M6	Y	-.193	-.193	.75	1.5
42	M6	Y	-.385	-.385	1.5	2.25
43	M6	Y	-.193	-.193	2.25	3
44	M7	Y	-.385	-.385	0	.75
45	M7	Y	-.193	-.193	.75	1.5
46	M7	Y	-.385	-.385	1.5	2.25
47	M7	Y	-.193	-.193	2.25	3
48	M7	Y	-.385	-.385	3	3.75
49	M7	Y	-.385	-.385	3.75	4.5
50	M7	Y	-.193	-.193	4.5	5.25

Member Area Loads (BLC 1 : PLT DEAD LOAD)

	Joint A	Joint B	Joint C	Joint D	Direction	Distribution	Magnitude[psf]
1	N6	N14	N13	N5	Y	A-B	-50.5

Member Area Loads (BLC 2 : PLT LIVE LOAD)

	Joint A	Joint B	Joint C	Joint D	Direction	Distribution	Magnitude[psf]
1	N6	N14	N13	N5	Y	A-B	-24.26

Member Area Loads (BLC 4 : 5:1 PLT LIVE LOAD)

	Joint A	Joint B	Joint C	Joint D	Direction	Distribution	Magnitude[psf]
1	N6	N14	N13	N5	Y	A-B	-121.32

Basic Load Cases

	BLC Description	Category	X Gravity	Y Gravity	Z Gravity	Joint	Point	Distributed	Area (Me...	Surface (...
1	PLT DEAD LOAD	DL							1	
2	PLT LIVE LOAD	LL							1	
3	HYDRAULIC PUMP	OL3					1			
4	5:1 PLT LIVE LOAD	LLS							1	
5	BLC 1 Transient Area...	None						50		
6	BLC 2 Transient Area...	None						50		
7	BLC 4 Transient Area...	None						50		

Load Combinations

	Description	Sol...	PD...	SR...	BLC	Factor	BLC	Factor	BLC	Factor	BLC	Factor	BLC	Factor	BLC	Factor	BLC	Factor	BLC	Factor
1	DL+LL+OL1	Yes			DL	1	LL	1	OL3	1										
2	DL+5LL(LLS)+OL1	Yes			DL	1	LLS	1	OL3	1										

Load Combination Design

	Description	ASIF	CD	ABIF	Service	Hot Rolled	Cold Form...	Wood	Concrete	Footings
1	DL+LL+OL1					Yes	Yes	Yes	Yes	Yes
2	DL+5LL(LLS)+OL1	1.33				Yes	Yes	Yes	Yes	Yes

Envelope Joint Displacements

	Joint		X [in]	lc	Y [in]	lc	Z [in]	lc	X Rotation ...	lc	Y Rotation ...	lc	Z Rotation [...	lc
1	N1	max	0	2	0	1	0	2	0	1	6.116e-6	2	1.676e-6	2
2		min	0	1	-.001	2	0	1	0	2	2.945e-6	1	-3.842e-7	1
3	N2	max	0	1	0	1	0	1	3.612e-7	2	6.111e-6	2	3.845e-7	1
4		min	0	2	-.001	2	0	2	1.683e-7	1	2.941e-6	1	-1.675e-6	2

Company : Precision Surveillance Corp.
Designer : Brian Giometti
Job Number : CR-N1013-102 CR3: BT2-60 & BT5-240 Work Platform Design Checked By: CEC

Envelope Joint Displacements (Continued)

	Joint		X [in]	lc	Y [in]	lc	Z [in]	lc	X Rotation ...	lc	Y Rotation ...	lc	Z Rotation [...	lc
5	N3	max	0	2	0	1	0	2	-6.647e-7	1	6.142e-6	2	2.648e-6	2
6		min	0	1	-.001	2	0	1	-1.409e-6	2	2.956e-6	1	6.126e-8	1
7	N4	max	0	1	0	1	0	1	1.14e-6	2	6.108e-6	2	3.865e-7	1
8		min	0	2	-.001	2	0	2	5.31e-7	1	2.94e-6	1	-1.658e-6	2
9	N5	max	0	2	0	1	0	2	-6.647e-7	1	6.142e-6	2	2.648e-6	2
10		min	0	1	-.001	2	0	1	-1.409e-6	2	2.956e-6	1	6.126e-8	1
11	N6	max	0	2	0	1	0	2	0	1	6.116e-6	2	1.676e-6	2
12		min	0	1	-.001	2	0	1	0	2	2.945e-6	1	-3.842e-7	1
13	N7	max	0	1	0	1	0	1	-1.438e-7	1	6.11e-6	2	-1.068e-6	2
14		min	0	2	-.001	2	0	2	-2.592e-7	2	2.941e-6	1	-3.937e-6	1
15	N8	max	0	2	0	1	0	1	9.2e-8	2	6.115e-6	2	-1.057e-6	2
16		min	0	1	-.001	2	0	2	4.286e-8	1	2.944e-6	1	-3.932e-6	1
17	N9	max	0	1	-.001	1	0	1	2.953e-7	2	6.116e-6	2	-1.095e-8	1
18		min	0	2	-.002	2	0	2	1.189e-7	1	2.944e-6	1	-2.399e-8	2
19	N10	max	0	2	-.001	1	0	1	1.808e-7	2	6.116e-6	2	0	2
20		min	0	1	-.002	2	0	2	8.423e-8	1	2.944e-6	1	0	1
21	N11	max	0	1	0	1	0	1	7.105e-7	2	6.115e-6	2	3.939e-6	1
22		min	0	2	-.001	2	0	2	3.215e-7	1	2.943e-6	1	1.075e-6	2
23	N12	max	0	2	0	1	0	1	2.695e-7	2	6.114e-6	2	3.932e-6	1
24		min	0	1	-.001	2	0	2	1.256e-7	1	2.943e-6	1	1.057e-6	2
25	N13	max	0	1	0	1	0	1	1.14e-6	2	6.108e-6	2	3.865e-7	1
26		min	0	2	-.001	2	0	2	5.31e-7	1	2.94e-6	1	-1.658e-6	2
27	N14	max	0	1	0	1	0	1	3.612e-7	2	6.111e-6	2	3.845e-7	1
28		min	0	2	-.001	2	0	2	1.683e-7	1	2.941e-6	1	-1.675e-6	2
29	N15	max	0	2	0	1	0	1	1.098e-7	2	6.115e-6	2	-9.186e-6	1
30		min	0	1	0	2	0	2	5.117e-8	1	2.943e-6	1	-1.083e-5	2
31	N16	max	0	1	0	1	0	1	-3.664e-8	2	6.117e-6	2	-9.209e-6	1
32		min	0	2	0	2	0	2	-4.301e-8	1	2.944e-6	1	-1.088e-5	2
33	N17	max	0	2	0	1	0	1	2.518e-7	2	6.115e-6	2	1.083e-5	2
34		min	0	1	0	2	0	2	1.173e-7	1	2.943e-6	1	9.186e-6	1
35	N18	max	0	1	0	1	0	1	6.273e-7	2	6.116e-6	2	1.083e-5	2
36		min	0	2	0	2	0	2	2.809e-7	1	2.944e-6	1	9.187e-6	1
37	N19	max	0	2	0	1	0	1	1.995e-6	2	5.731e-6	2	8.832e-6	2
38		min	0	1	0	2	0	2	9.58e-7	1	2.759e-6	1	3.862e-6	1
39	N20	max	0	1	0	1	0	2	1.202e-5	2	1.416e-5	2	1.084e-5	2
40		min	0	2	0	2	0	1	5.792e-6	1	6.159e-6	1	4.742e-6	1
41	N21	max	0	2	0	1	0	1	1.695e-6	2	6.371e-6	2	-3.862e-6	1
42		min	0	1	0	2	0	2	8.121e-7	1	3.067e-6	1	-8.832e-6	2
43	N22	max	0	2	0	1	0	2	8.919e-6	2	7.611e-6	2	-3.721e-6	1
44		min	0	1	0	2	0	1	4.293e-6	1	3.667e-6	1	-8.51e-6	2
45	N23	max	0	2	0	1	0	1	1.995e-6	2	5.731e-6	2	8.832e-6	2
46		min	0	1	0	2	0	2	9.58e-7	1	2.759e-6	1	3.862e-6	1
47	N24	max	0	2	0	1	0	1	1.695e-6	2	6.371e-6	2	-3.862e-6	1
48		min	0	1	0	2	0	2	8.121e-7	1	3.067e-6	1	-8.832e-6	2
49	N25	max	0	1	0	1	0	2	1.202e-5	2	1.416e-5	2	1.084e-5	2
50		min	0	2	0	2	0	1	5.792e-6	1	6.159e-6	1	4.742e-6	1
51	N26	max	0	1	0	1	0	1	8.919e-6	2	7.611e-6	2	-3.721e-6	1
52		min	0	2	0	2	0	2	4.293e-6	1	3.667e-6	1	-8.51e-6	2
53	N27	max	0	2	0	1	0	1	1.995e-6	2	5.923e-6	2	8.289e-6	2
54		min	0	1	0	2	0	2	9.579e-7	1	2.851e-6	1	4.069e-6	1
55	N28	max	0	2	0	1	0	1	1.695e-6	2	6.243e-6	2	-4.069e-6	1
56		min	0	1	0	2	0	2	8.122e-7	1	3.005e-6	1	-8.288e-6	2
57	N29	max	0	1	0	1	0	2	1.218e-5	2	1.014e-5	2	8.374e-6	2
58		min	0	2	0	2	0	1	5.863e-6	1	4.551e-6	1	4.106e-6	1
59	N30	max	0	1	0	1	0	1	8.922e-6	2	6.864e-6	2	-4.037e-6	1
60		min	0	2	0	2	0	2	4.294e-6	1	3.305e-6	1	-8.216e-6	2
61	N31	max	0	2	0	1	0	1	1.903e-6	2	6.111e-6	2	-6.672e-6	1

Company : Precision Surveillance Corp.
Designer : Brian Giometti
Job Number : CR-N1013-102 CR3: BT2-60 & BT5-240 Work Platform Design Checked By: CEC

Envelope Joint Displacements (Continued)

	Joint		X [in]	lc	Y [in]	lc	Z [in]	lc	X Rotation ...	lc	Y Rotation ...	lc	Z Rotation [...	lc
62		min	0	1	-.001	2	0	2	9.048e-7	1	2.941e-6	1	-1.43e-5	2
63	N32	max	0	1	0	1	0	1	1.401e-6	2	6.108e-6	2	-6.663e-6	1
64		min	0	2	-.001	2	0	2	6.544e-7	1	2.94e-6	1	-1.428e-5	2
65	N33	max	0	2	0	1	0	2	7.011e-6	2	6.116e-6	2	1.019e-5	2
66		min	0	1	-.001	2	0	1	3.377e-6	1	2.945e-6	1	4.369e-6	1
67	N34	max	0	1	0	1	0	2	6.962e-6	2	6.142e-6	2	1.009e-5	2
68		min	0	2	-.001	2	0	1	3.355e-6	1	2.956e-6	1	4.325e-6	1
69	N35	max	0	1	0	1	0	1	-9.834e-5	1	-1.919e-6	1	3.865e-7	1
70		min	0	2	-.002	2	0	2	-2.26e-4	2	-4.564e-6	2	-1.658e-6	2
71	N36	max	0	1	0	1	0	1	2.261e-4	2	-1.919e-6	1	3.846e-7	1
72		min	0	2	-.002	2	0	2	9.836e-5	1	-4.564e-6	2	-1.675e-6	2
73	N37	max	0	2	-.004	1	0	1	-3.18e-5	1	-1.919e-6	1	-6.668e-6	1
74		min	0	1	-.009	2	0	2	-7.333e-5	2	-4.564e-6	2	-1.429e-5	2
75	N38	max	0	1	-.004	1	0	1	1.152e-5	2	-1.919e-6	1	3.855e-7	1
76		min	0	2	-.009	2	0	2	5.015e-6	1	-4.564e-6	2	-1.667e-6	2
77	N39	max	0	1	0	1	0	1	1.272e-6	2	6.108e-6	2	-4.957e-6	1
78		min	0	2	-.001	2	0	2	5.934e-7	1	2.94e-6	1	-1.123e-5	2
79	N40	max	0	2	-.004	1	0	1	-3.542e-7	1	-1.919e-6	1	-4.672e-6	1
80		min	0	1	-.009	2	0	2	-9.157e-7	2	-4.564e-6	2	-1.072e-5	2
81	N41	max	0	2	0	1	0	1	1.382e-6	2	6.111e-6	2	-4.405e-6	1
82		min	0	1	-.001	2	0	2	6.451e-7	1	2.941e-6	1	-1.025e-5	2
83	N42	max	0	2	0	1	0	2	-9.932e-5	1	-1.924e-6	1	2.626e-6	2
84		min	0	1	-.002	2	0	1	-2.283e-4	2	-4.574e-6	2	5.134e-8	1
85	N43	max	0	1	-.004	1	0	2	-3.623e-5	1	-1.924e-6	1	1.014e-5	2
86		min	0	2	-.009	2	0	1	-8.189e-5	2	-4.574e-6	2	4.348e-6	1
87	N44	max	0	2	-.004	1	0	2	9.285e-6	2	-1.924e-6	1	2.145e-6	2
88		min	0	1	-.009	2	0	1	4.041e-6	1	-4.574e-6	2	-1.689e-7	1
89	N45	max	0	1	0	1	0	2	7.066e-6	2	6.142e-6	2	1.009e-5	2
90		min	0	2	-.001	2	0	1	3.403e-6	1	2.956e-6	1	4.325e-6	1
91	N46	max	0	2	-.004	1	0	2	4.409e-6	2	-1.924e-6	1	1.014e-5	2
92		min	0	1	-.009	2	0	1	2.218e-6	1	-4.574e-6	2	4.348e-6	1
93	N47	max	0	2	0	1	0	2	6.907e-6	2	6.116e-6	2	1.019e-5	2
94		min	0	1	-.001	2	0	1	3.328e-6	1	2.945e-6	1	4.369e-6	1

Envelope Joint Reactions

	Joint		X [k]	lc	Y [k]	lc	Z [k]	lc	MX [k-ft]	lc	MY [k-ft]	lc	MZ [k-ft]	lc
1	N20	max	0	1	3.463	2	0	1	0	1	0	1	0	1
2		min	0	1	1.613	1	0	1	0	1	0	1	0	1
3	N22	max	0	1	3.463	2	0	1	0	1	0	1	0	1
4		min	0	2	1.613	1	0	2	0	1	0	1	0	1
5	N21	max	0	1	3.463	2	0	1	0	1	0	1	0	1
6		min	0	1	1.613	1	0	1	0	1	0	1	0	1
7	N19	max	0	1	3.463	2	0	2	0	1	0	1	0	1
8		min	0	2	1.613	1	0	1	0	1	0	1	0	1
9	N1	max	0	1	0	1	0	1	0	2	0	1	0	1
10		min	0	1	0	1	0	1	0	1	0	1	0	1
11	Totals:	max	0	1	13.85	2	0	1						
12		min	0	2	6.45	1	0	2						

Envelope Member Section Forces

	Member	Sec		Axial[k]	lc	y Shear[k]	lc	z Shear[k]	lc	Torque[k-ft]	lc	y-y Momen...	lc	z-z Momen...	lc
1	M1	1	max	0	1	0	1	0	1	0	1	0	1	0	1
2			min	0	1	0	1	0	1	0	1	0	1	0	1
5		3	max	0	1	0	1	0	1	0	1	0	1	0	1
6			min	0	1	0	1	0	1	0	1	0	1	0	1

Company : Precision Surveillance Corp.
Designer : Brian Giometti
Job Number : CR-N1013-102 CR3: BT2-60 & BT5-240 Work Platform Design Checked By: CEC

Envelope Member Section Forces (Continued)

	Member	Sec		Axial[k]	lc	y Shear[k]	lc	z Shear[k]	lc	Torque[k-ft]	lc	y-y Momen...	lc	z-z Momen...	lc
7	M2	1	max	0	1	0	1	0	1	0	2	0	1	0	1
8			min	0	1	0	1	0	1	0	1	0	1	0	1
11		3	max	0	1	0	1	0	1	0	1	0	1	0	1
12			min	0	1	0	1	0	1	0	1	0	1	0	1
13	M3	1	max	0	1	.819	2	0	1	0	1	0	1	0	1
14			min	0	2	.356	1	0	1	0	2	0	1	0	1
17		3	max	0	1	-.356	1	0	1	0	1	0	1	0	1
18			min	0	2	-.819	2	0	1	0	2	0	1	0	1
19	M4	1	max	0	2	.819	2	0	1	0	1	0	1	0	1
20			min	0	1	.356	1	0	1	0	2	0	1	0	1
23		3	max	0	2	-.356	1	0	1	0	1	0	1	0	1
24			min	0	1	-.819	2	0	1	0	2	0	1	0	1
25	M5	1	max	0	2	1.638	2	0	1	0	1	0	1	0	1
26			min	0	1	.713	1	0	1	0	2	0	1	0	1
29		3	max	0	2	-.713	1	0	1	0	1	0	1	0	1
30			min	0	1	-1.638	2	0	1	0	2	0	1	0	1
31	M6	1	max	0	1	2.013	2	0	1	0	2	0	1	0	1
32			min	0	2	1.088	1	0	1	0	1	0	1	0	1
35		3	max	0	1	-1.088	1	0	1	0	2	0	1	0	1
36			min	0	2	-2.013	2	0	1	0	1	0	1	0	1
37	M7	1	max	0	1	1.638	2	0	1	0	2	0	1	0	1
38			min	0	2	.713	1	0	1	0	1	0	1	0	1
41		3	max	0	1	-.713	1	0	1	0	2	0	1	0	1
42			min	0	2	-1.638	2	0	1	0	1	0	1	0	1
43	M8	1	max	-1.282	1	.003	2	0	1	0	2	0	1	0	1
44			min	-2.663	2	-.001	1	0	1	0	1	0	1	0	1
47		3	max	-1.613	1	0	1	0	1	0	1	0	1	0	1
48			min	-3.463	2	0	1	0	1	0	1	0	1	0	1
49	M9	1	max	-1.279	1	.005	2	0	1	0	1	0	1	0	1
50			min	-2.659	2	0	1	0	2	0	2	0	1	0	1
53		3	max	-1.613	1	0	1	0	1	0	1	0	1	0	1
54			min	-3.463	2	0	1	0	1	0	1	0	1	0	1
55	M10	1	max	-1.282	1	.001	1	0	1	0	1	0	1	0	1
56			min	-2.663	2	-.003	2	0	1	0	2	0	1	0	1
59		3	max	-1.613	1	0	1	0	1	0	1	0	1	0	1
60			min	-3.463	2	0	1	0	1	0	1	0	1	0	1
61	M11	1	max	-1.281	1	.002	1	0	2	0	1	0	1	0	1
62			min	-2.663	2	-.002	2	0	1	0	2	0	1	0	1
65		3	max	-1.613	1	0	1	0	2	0	1	0	1	0	1
66			min	-3.463	2	0	1	0	1	0	1	0	1	0	1
67	M12	1	max	-.285	1	0	1	0	1	0	2	.046	2	.046	2
68			min	-.684	2	0	1	0	1	0	1	.019	1	.019	1
71		3	max	-.285	1	0	1	0	1	0	2	.046	2	.046	2
72			min	-.684	2	0	1	0	1	0	1	.019	1	.019	1
73	M13	1	max	-.286	1	0	1	0	1	0	2	.046	2	-.019	1
74			min	-.685	2	0	1	0	1	0	1	.019	1	-.046	2
77		3	max	-.286	1	0	1	0	1	0	2	.046	2	-.019	1
78			min	-.685	2	0	1	0	1	0	1	.019	1	-.046	2
79	M14	1	max	.002	1	0	1	0	1	0	2	0	2	0	2
80			min	-.006	2	0	1	0	1	0	1	0	1	0	1
83		3	max	.002	1	0	1	0	1	0	2	0	2	0	2
84			min	-.006	2	0	1	0	1	0	1	0	1	0	1
85	M15	1	max	.003	1	0	1	0	1	0	2	0	2	0	1
86			min	-.003	2	0	1	0	1	0	1	0	1	0	2
89		3	max	.003	1	0	1	0	1	0	2	0	2	0	1
90			min	-.003	2	0	1	0	1	0	1	0	1	0	2
91	M16	1	max	-.436	1	0	1	0	1	0	2	0	1	0	1

Company : Precision Surveillance Corp.
Designer : Brian Giometti
Job Number : CR-N1013-102 CR3: BT2-60 & BT5-240 Work Platform Design Checked By: CEC

Envelope Member Section Forces (Continued)

	Member	Sec		Axial[k]	lc	y Shear[k]	lc	z Shear[k]	lc	Torque[k-ft]	lc	y-y Momen...	lc	z-z Momen...	lc
92			min	-1.054	2	0	1	0	1	0	1	0	1	0	1
95		3	max	-.436	1	0	1	0	1	0	2	0	1	0	1
96			min	-1.054	2	0	1	0	1	0	1	0	1	0	1
97	M17	1	max	-.436	1	0	1	0	1	0	1	0	1	0	1
98			min	-1.054	2	0	1	0	1	0	2	0	1	0	1
101		3	max	-.436	1	0	1	0	1	0	1	0	1	0	1
102			min	-1.054	2	0	1	0	1	0	2	0	1	0	1
103	M18	1	max	-.437	1	0	1	0	1	0	2	0	1	0	1
104			min	-1.054	2	0	1	0	1	0	1	0	1	0	1
107		3	max	-.437	1	0	1	0	1	0	2	0	1	0	1
108			min	-1.054	2	0	1	0	1	0	1	0	1	0	1
109	M19	1	max	0	1	0	1	0	1	0	1	0	1	0	1
110			min	0	1	0	2	0	2	0	1	0	1	0	1
113		3	max	0	1	0	1	0	2	0	1	0	1	0	1
114			min	0	1	0	2	0	1	0	1	0	1	0	1
115	M20	1	max	0	1	0	1	0	1	0	1	0	1	0	1
116			min	0	2	0	1	0	1	0	2	0	1	0	1
119		3	max	0	1	0	1	0	1	0	1	0	1	0	1
120			min	0	2	0	1	0	1	0	2	0	1	0	1
121	M21	1	max	0	1	0	1	0	2	0	1	0	1	0	2
122			min	0	1	0	2	0	1	0	1	0	2	0	1
125		3	max	0	1	0	2	0	2	0	1	0	2	0	2
126			min	0	1	0	1	0	1	0	1	0	1	0	1
127	M22	1	max	0	2	0	1	0	1	0	2	0	1	0	1
128			min	0	1	0	1	0	1	0	1	0	1	0	1
131		3	max	0	2	0	1	0	1	0	2	0	1	0	1
132			min	0	1	0	1	0	1	0	1	0	1	0	1
133	M23	1	max	0	1	0	1	0	1	0	2	0	1	0	1
134			min	0	1	0	1	0	1	0	1	0	1	0	1
137		3	max	0	1	0	1	0	1	0	2	0	1	0	1
138			min	0	1	0	1	0	1	0	1	0	1	0	1
139	M24	1	max	0	1	0	2	0	1	0	1	0	1	0	1
140			min	0	1	0	1	0	1	0	1	0	1	0	1
143		3	max	0	1	0	1	0	1	0	1	0	2	0	2
144			min	0	1	0	2	0	1	0	1	0	1	0	1
145	M25	1	max	0	1	0	1	0	2	0	1	0	1	0	1
146			min	0	1	0	1	0	1	0	1	0	1	0	1
149		3	max	0	1	0	1	0	1	0	1	0	1	0	2
150			min	0	1	0	1	0	2	0	1	0	2	0	1
151	M26	1	max	0	1	0	1	0	1	0	1	0	1	0	1
152			min	0	1	0	1	0	1	0	2	0	1	0	1
155		3	max	0	1	0	1	0	1	0	1	0	1	0	1
156			min	0	1	0	1	0	1	0	2	0	1	0	1
157	M27	1	max	0	2	0	1	0	1	0	1	0	1	0	1
158			min	0	1	0	1	0	1	0	2	0	1	0	1
161		3	max	0	2	0	1	0	1	0	1	0	1	0	1
162			min	0	1	0	1	0	1	0	2	0	1	0	1
163	M28	1	max	0	1	0	1	0	1	0	1	0	1	0	1
164			min	0	1	0	1	0	1	0	1	0	1	0	1
167		3	max	0	1	0	1	0	1	0	1	0	1	0	1
168			min	0	1	0	1	0	1	0	1	0	1	0	1
169	M29	1	max	0	2	0	1	0	1	0	1	0	1	0	1
170			min	0	1	0	1	0	1	0	2	0	1	0	1
173		3	max	0	2	0	1	0	1	0	1	0	1	0	1
174			min	0	1	0	1	0	1	0	2	0	1	0	1
175	M30	1	max	0	1	0	1	0	1	0	2	0	1	0	1
176			min	0	2	0	1	0	1	0	1	0	1	0	1

Company : Precision Surveillance Corp.
Designer : Brian Giometti
Job Number : CR-N1013-102 CR3: BT2-60 & BT5-240 Work Platform Design Checked By: CEC

Envelope Member Section Forces (Continued)

	Member	Sec		Axial[k]	lc	y Shear[k]	lc	z Shear[k]	lc	Torque[k-ft]	lc	y-y Momen...	lc	z-z Momen...	lc
179		3	max	0	1	0	1	0	1	0	2	0	1	0	1
180			min	0	2	0	1	0	1	0	1	0	1	0	1
181	M31	1	max	0	1	0	1	0	1	0	2	0	1	0	1
182			min	0	2	0	1	0	1	0	1	0	1	0	1
185		3	max	0	1	0	1	0	1	0	2	0	1	0	1
186			min	0	2	0	1	0	1	0	1	0	1	0	1
187	M32	1	max	0	1	0	1	0	1	0	1	0	1	0	1
188			min	0	1	0	1	0	1	0	1	0	1	0	1
191		3	max	0	1	0	1	0	1	0	1	0	1	0	1
192			min	0	1	0	1	0	1	0	1	0	1	0	1
193	M33	1	max	0	1	0	1	0	1	0	2	0	1	0	1
194			min	0	2	0	1	0	1	0	1	0	1	0	1
197		3	max	0	1	0	1	0	1	0	2	0	1	0	1
198			min	0	2	0	1	0	1	0	1	0	1	0	1
199	M34	1	max	0	1	0	1	0	1	0	2	0	1	0	1
200			min	0	2	0	1	0	1	0	1	0	1	0	1
203		3	max	0	1	0	1	0	1	0	2	0	1	0	1
204			min	0	2	0	1	0	1	0	1	0	1	0	1
205	M35	1	max	0	2	0	1	0	1	0	2	0	1	0	1
206			min	0	1	0	1	0	1	0	1	0	1	0	1
209		3	max	0	2	0	1	0	1	0	2	0	1	0	1
210			min	0	1	0	1	0	1	0	1	0	1	0	1
211	M36	1	max	0	2	0	1	0	1	0	2	0	1	0	1
212			min	0	1	0	1	0	1	0	1	0	1	0	1
215		3	max	0	2	0	1	0	1	0	2	0	1	0	1
216			min	0	1	0	1	0	1	0	1	0	1	0	1
217	M37	1	max	-.437	1	.006	2	0	1	0	1	-.004	1	.009	2
218			min	-1.055	2	.003	1	0	2	0	2	-.009	2	.004	1
221		3	max	-.437	1	.006	2	0	1	0	1	.007	2	-.003	1
222			min	-1.055	2	.003	1	0	2	0	2	.003	1	-.007	2

Envelope AISC ASD Steel Code Checks

	Member	Shape	Code C...	Loc[ft]	lc	Shear ...	Loc[ft]	Dir	lc	Fa [ksi]	Ft [ksi]	Fb y...	Fb z-z [...	Cb	Cmy	Cmz	ASD Eqn
1	M1	W10X22	.028	5.5	2	.035	7.52	y	2	17.328	28.728	35.91	24.61	1	.6	.6	H1-2
2	M2	W10X22	.028	5.5	2	.035	3.48	y	2	17.328	28.728	35.91	24.61	1	.6	.6	H1-2
3	M3	W8X24	.031	3.75	2	.022	0	y	2	23.687	28.728	35.91	28.728	1	.6	1	H2-1
4	M4	W8X24	.031	3.75	2	.022	7.5	y	2	23.687	28.728	35.91	28.728	1	.6	1	H1-3
5	M5	W8X28	.053	3.75	2	.037	7.5	y	2	23.747	28.728	35.91	28.728	1	.6	1	H1-3
6	M6	W8X28	.077	3.75	2	.046	7.5	y	2	23.747	28.728	35.91	28.728	1	.6	1	H2-1
7	M7	W8X28	.053	3.75	2	.037	0	y	2	23.747	28.728	35.91	28.728	1	.6	1	H2-1
8	M8	W6X16	.025	3.179	2	.000	1.607	y	2	25.15	28.728	35.91	31.601	1	.6	.6	H2-1
9	M9	W6X16	.025	3.179	2	.000	0	y	2	25.15	28.728	35.91	31.601	1	.6	.6	H2-1
10	M10	W6X16	.025	3.179	2	.000	1.607	y	2	25.15	28.728	35.91	31.601	1	.6	.6	H2-1
11	M11	W6X16	.025	3.179	2	.000	1.607	y	1	25.15	28.728	35.91	31.601	1	.6	.6	H2-1
12	M12	L4X4X6	.008	0	2	.000	0	z	2	24.057	28.728	- Co..					H2-1
13	M13	L4X4X6	.008	0	2	.000	0	z	2	24.057	28.728	- Co..					H2-1
14	M14	L2X2X4	.000	0	2	.000	0	z	2	16.109	28.728	- Co..					H2-1
15	M15	L2X2X4	.000	0	1	.000	0	z	2	12.112	21.6	- Co..					H1-1
16	M16	L4X4X6	.013	0	2	.000	0	z	2	22.973	28.728	- Co..					H2-1
17	M17	L4X4X6	.013	0	2	.000	0	z	2	22.973	28.728	- Co..					H2-1
18	M18	L4X4X6	.013	0	2	.000	0	z	2	22.973	28.728	- Co..					H2-1
19	M19	L2X2X4	.000	0	1	.000	0	z	2	13.332	21.6	- Co..					H1-1
20	M20	L2X2X4	.000	0	2	.000	0	z	2	18.151	28.728	- Co..					H2-1
21	M21	L2X2X4	.000	0	1	.000	0	z	2	13.332	21.6	- Co..					H1-1
22	M22	L2X2X4	.000	0	2	.000	0	z	2	19.426	28.728	- Co..					H1-1
23	M23	L2X2X4	.000	0	1	.000	0	z	2	14.606	21.6	- Co..					H1-1

Company : Precision Surveillance Corp.
Designer : Brian Giometti
Job Number : CR-N1013-102 CR3: BT2-60 & BT5-240 Work Platform Design Checked By: CEC

Envelope AISC ASD Steel Code Checks (Continued)

	Member	Shape	Code C...	Loc[ft]	lc	Shear ...	Loc[ft]	Dir	lc	Fa [ksi]	Ft [ksi]	Fb y...	Fb z-z [...	Cb	Cmy	Cmz	ASD Eqn
24	M24	L2X2X4	.000	0	1	.000	1.583	y	2	13.332	21.6	- Co..					H1-1
25	M25	L2X2X4	.000	0	1	.000	1.583	z	2	13.332	21.6	- Co..					H1-1
26	M26	L2X2X4	.000	0	1	.000	0	z	2	14.606	21.6	- Co..					H1-1
27	M27	L2X2X4	.000	0	2	.000	0	z	2	13.88	28.728	- Co..					H1-1
28	M28	L2X2X4	.000	0	1	.000	0	z	1	12.973	21.6	- Co..					H1-1
29	M29	L2X2X4	.000	0	2	.000	0	z	2	15.298	28.728	- Co..					H1-1
30	M30	L2X2X4	.000	0	2	.000	0	z	2	13.88	28.728	- Co..					H2-1
31	M31	L2X2X4	.000	0	2	.000	0	z	2	15.298	28.728	- Co..					H2-1
32	M32	L2X2X4	.000	0	1	.000	0	z	1	12.973	21.6	- Co..					H1-1
33	M33	L2X2X4	.000	0	2	.000	0	z	2	15.298	28.728	- Co..					H2-1
34	M34	L2X2X4	.000	0	2	.000	0	z	2	13.88	28.728	- Co..					H2-1
35	M35	L2X2X4	.000	0	2	.000	0	z	2	13.88	28.728	- Co..					H1-1
36	M36	L2X2X4	.000	0	2	.000	0	z	2	15.298	28.728	- Co..					H1-1
37	M37	L4X4X6	.013	0	2	.000	0	y	2	22.973	28.728	- Co..					H2-1

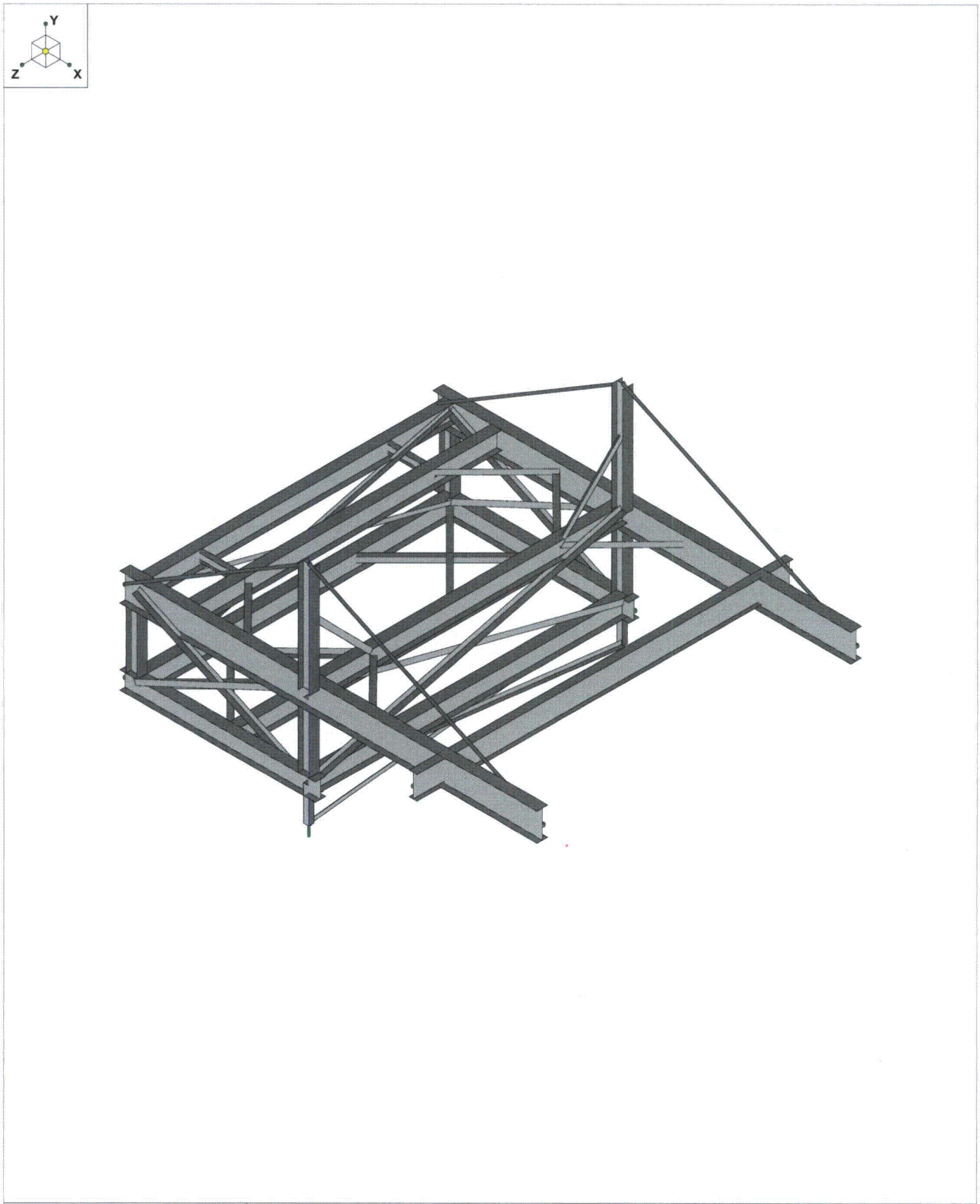

Precision Surveillance Corp	CR3 - BT3-120 & BT4-180 USF Design	
Brian Giometti		
CR-N1013-103		CR-N1013-103 BT3-120.BT4-180 ...

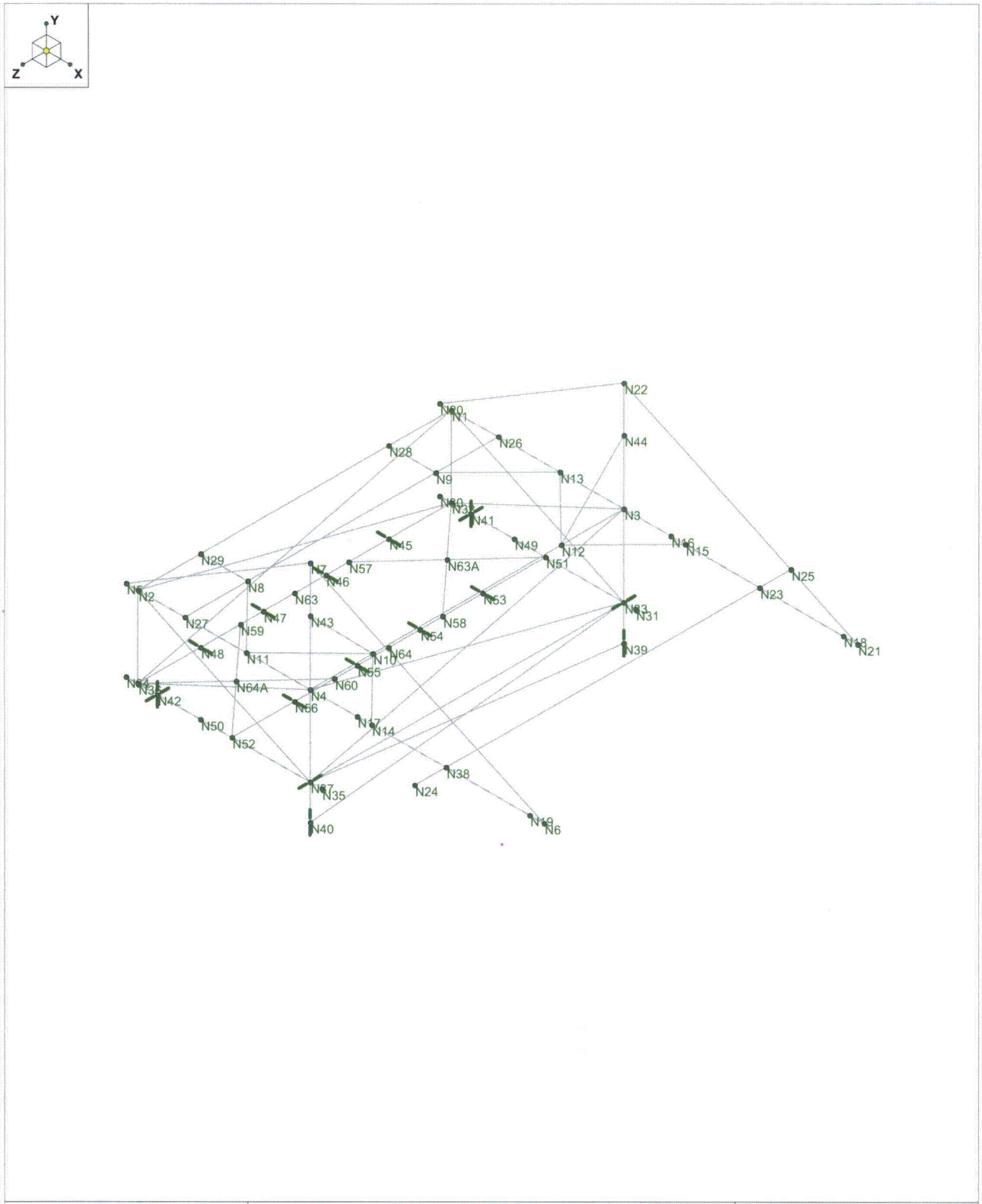

Precision Surveillance Corp	CR3 - BT3-120 & BT4-180 USF Design	
Brian Giometti		
CR-N1013-103		CR-N1013-103 BT3-120.BT4-180 ...

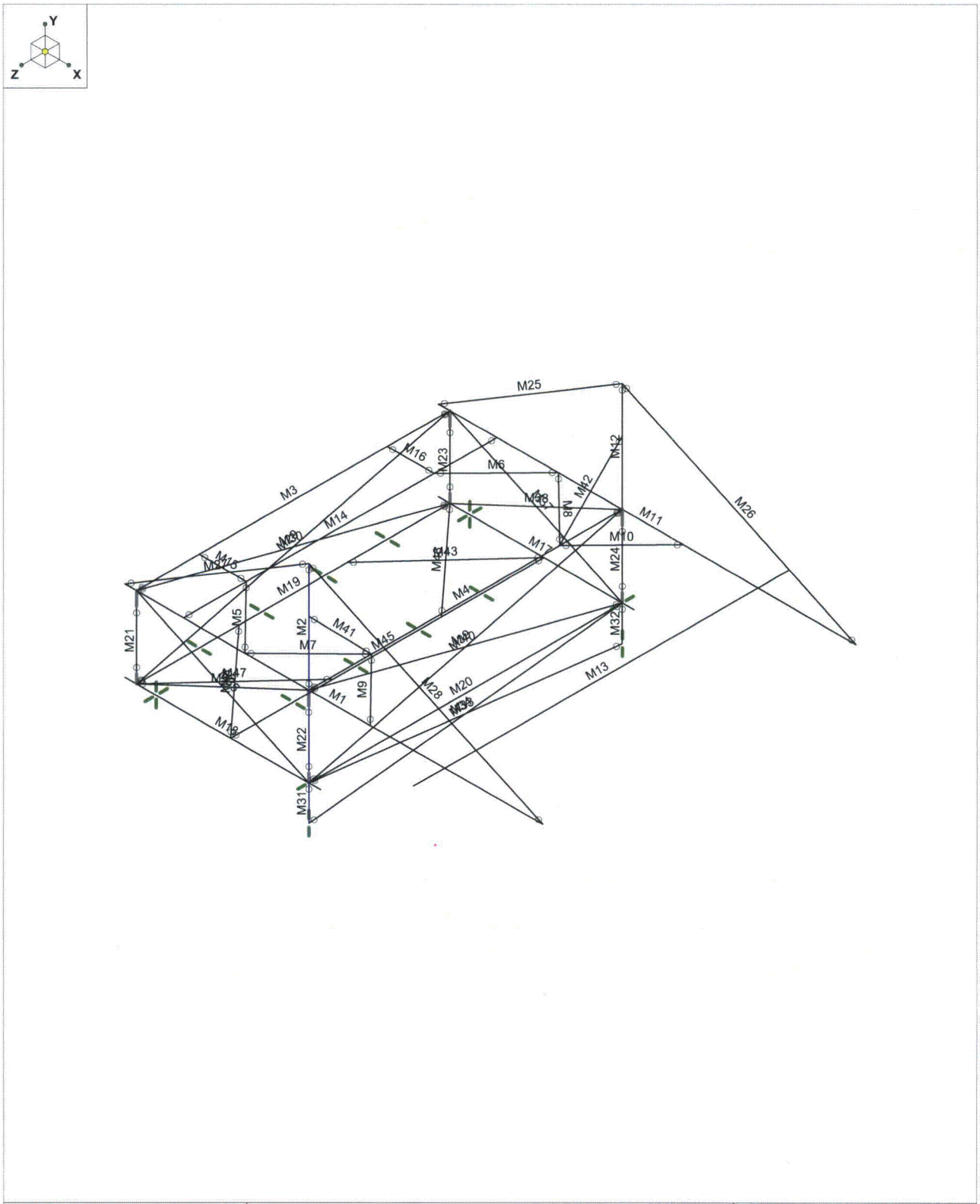

Precision Surveillance Corp	CR3 - BT3-120 & BT4-180 USF Design	
Brian Giometti		
CR-N1013-103		CR-N1013-103 BT3-120.BT4-180 ...

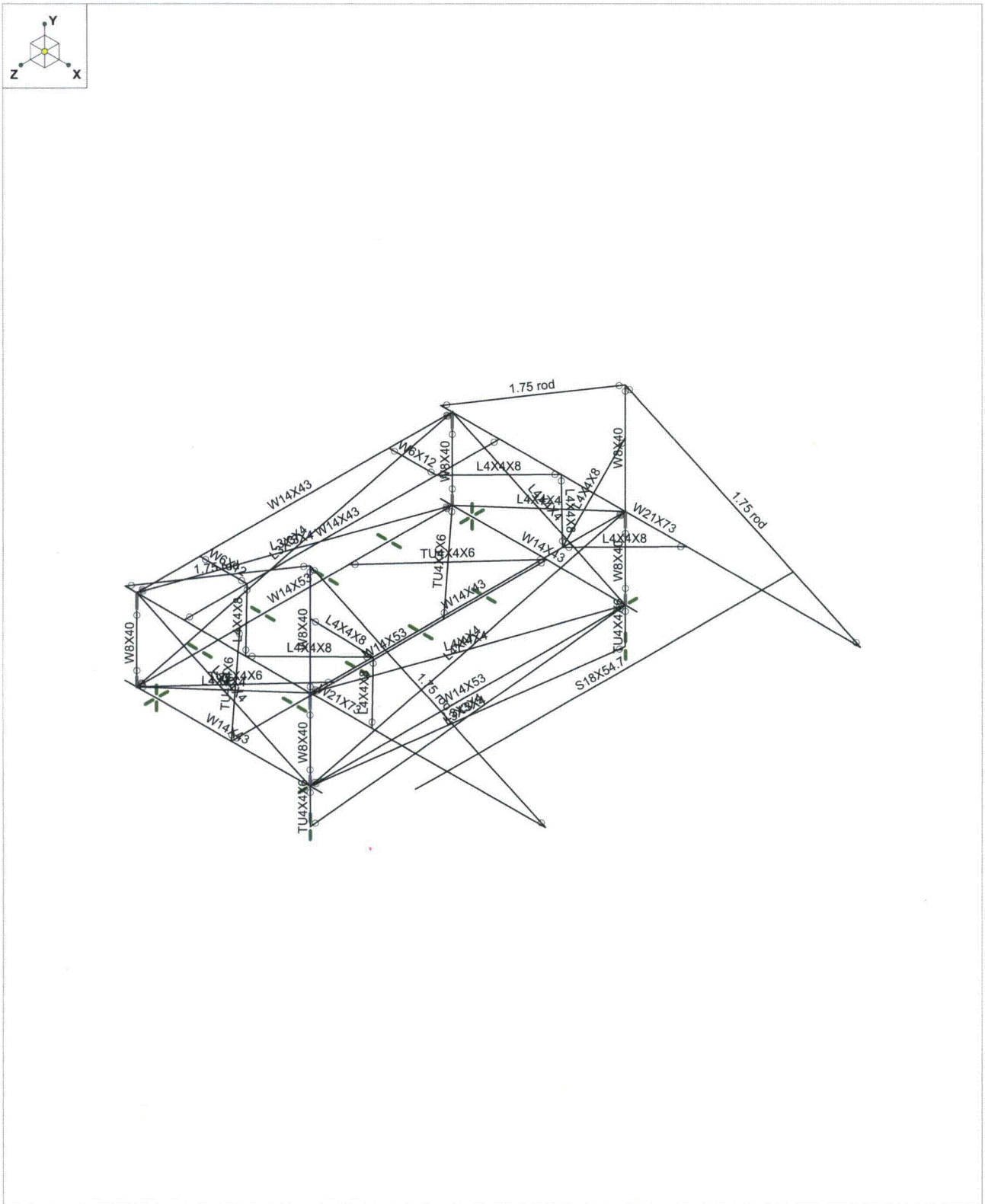

Precision Surveillance Corp	CR3 - BT3-120 & BT4-180 USF Design	
Brian Giometti		
CR-N1013-103		CR-N1013-103 BT3-120.BT4-180 ...

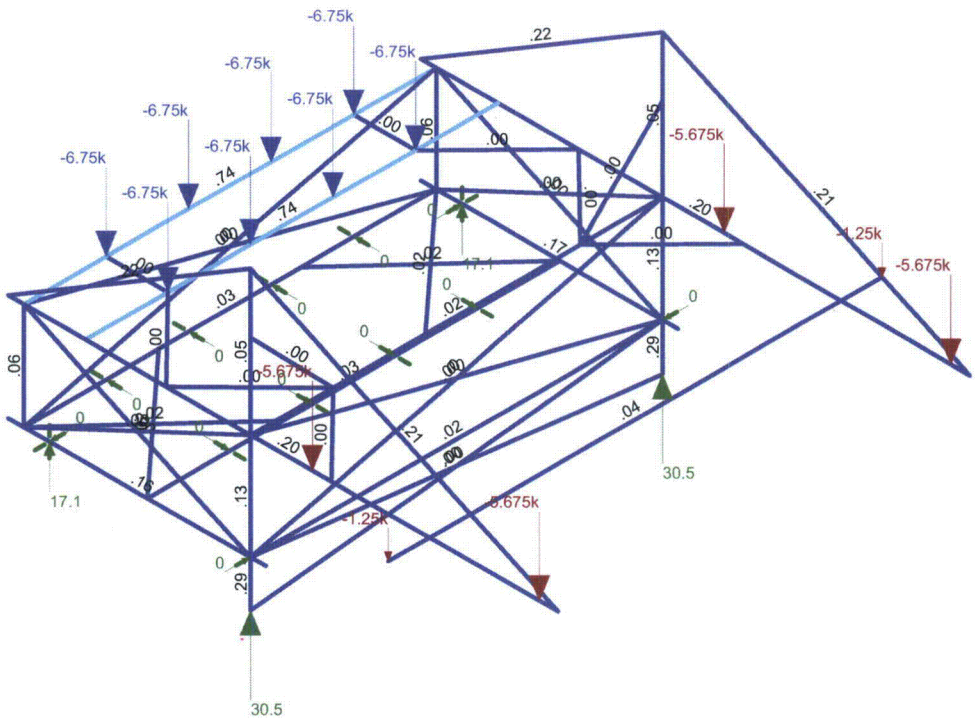

Member Code Checks Displayed
Loads: LC 1, DL + LL
Results for LC 1, DL + LL
Reaction units are k and k-ft

Precision Surveillance Corp	CR3 - BT3-120 & BT4-180 USF Design	
Brian Giometti		
CR-N1013-103		CR-N1013-103 BT3-120.BT4-180 ...

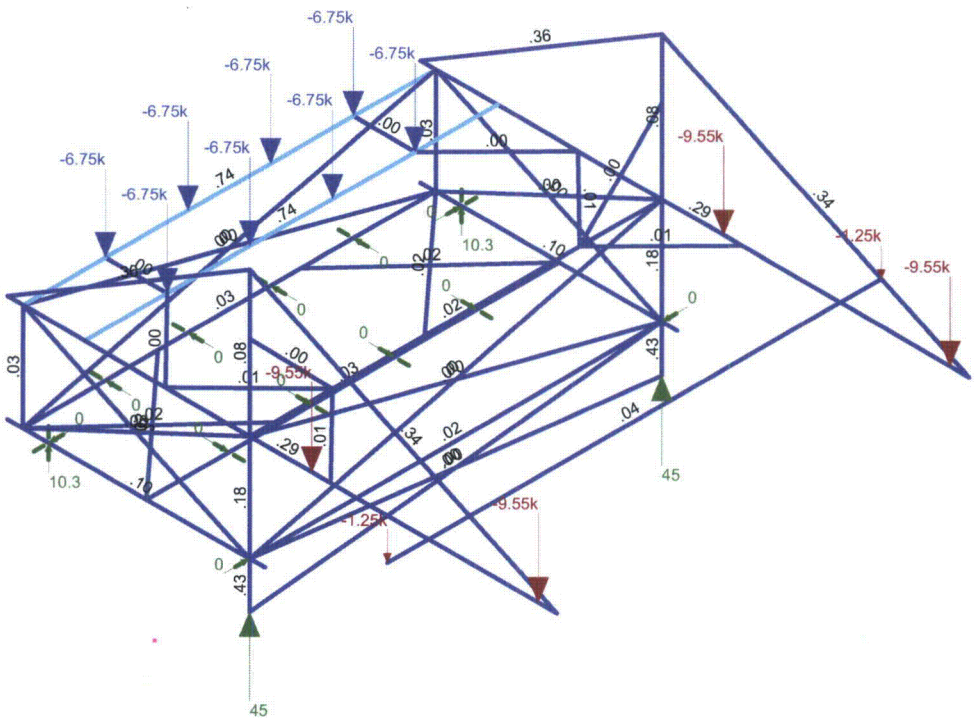

Member Code Checks Displayed
Loads: LC 2, DL+LL+OL4
Results for LC 2, DL+LL+OL4
Reaction units are k and k-ft

Precision Surveillance Corp	CR3 - BT3-120 & BT4-180 USF Design	
Brian Giometti		
CR-N1013-103		CR-N1013-103 BT3-120.BT4-180 ...

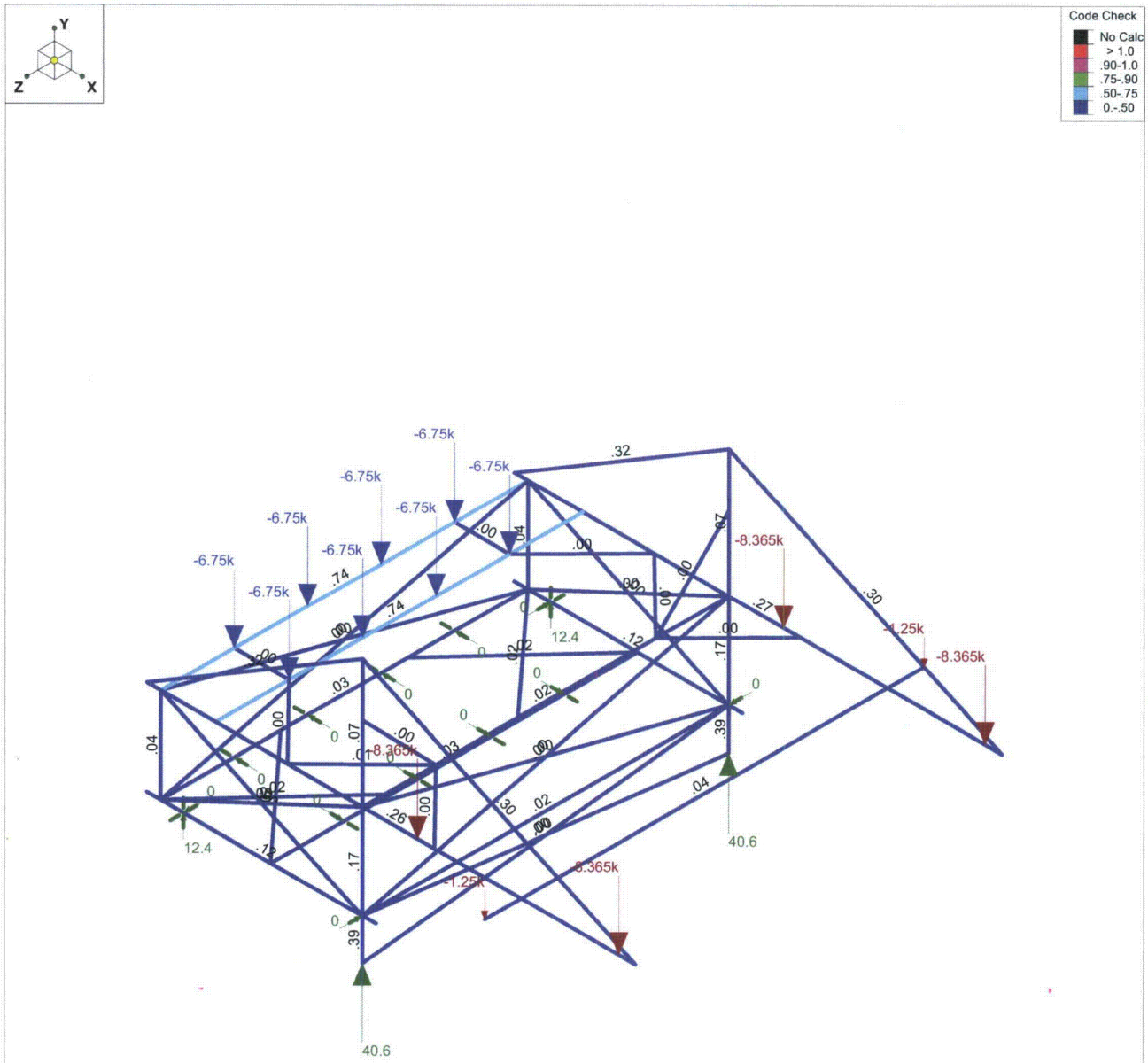

Member Code Checks Displayed
Loads: LC 3, DL+LL+OL5
Results for LC 3, DL+LL+OL5
Reaction units are k and k-ft

Precision Surveillance Corp	CR3 - BT3-120 & BT4-180 USF Design	
Brian Giometti		
CR-N1013-103		CR-N1013-103 BT3-120.BT4-180 ...

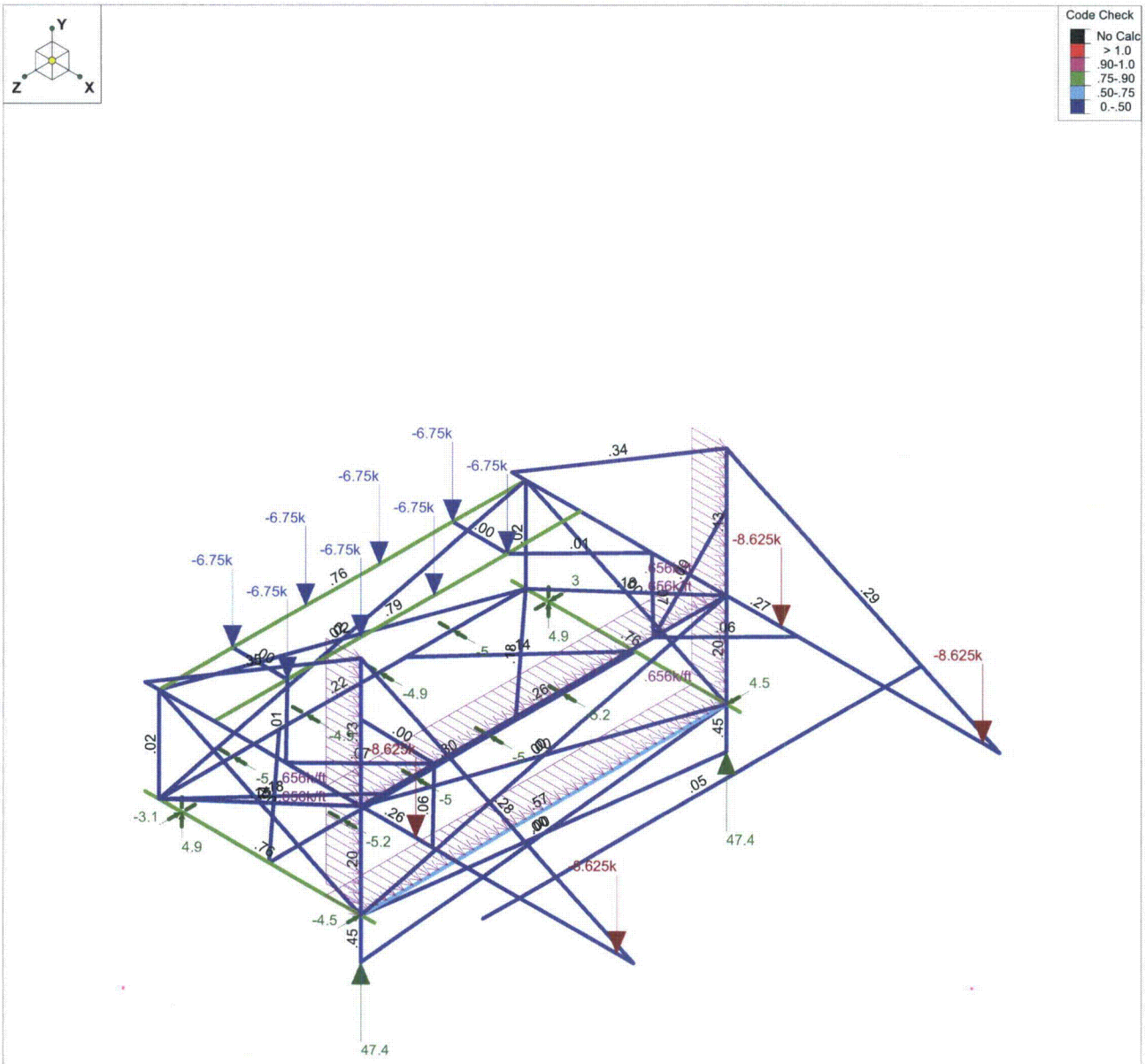

Member Code Checks Displayed
Loads: LC 4, DL+OL+WLX
Results for LC 4, DL+OL+WLX
Reaction units are k and k-ft

Precision Surveillance Corp	CR3 - BT3-120 & BT4-180 USF Design	
Brian Giometti		
CR-N1013-103		CR-N1013-103 BT3-120.BT4-180 ...

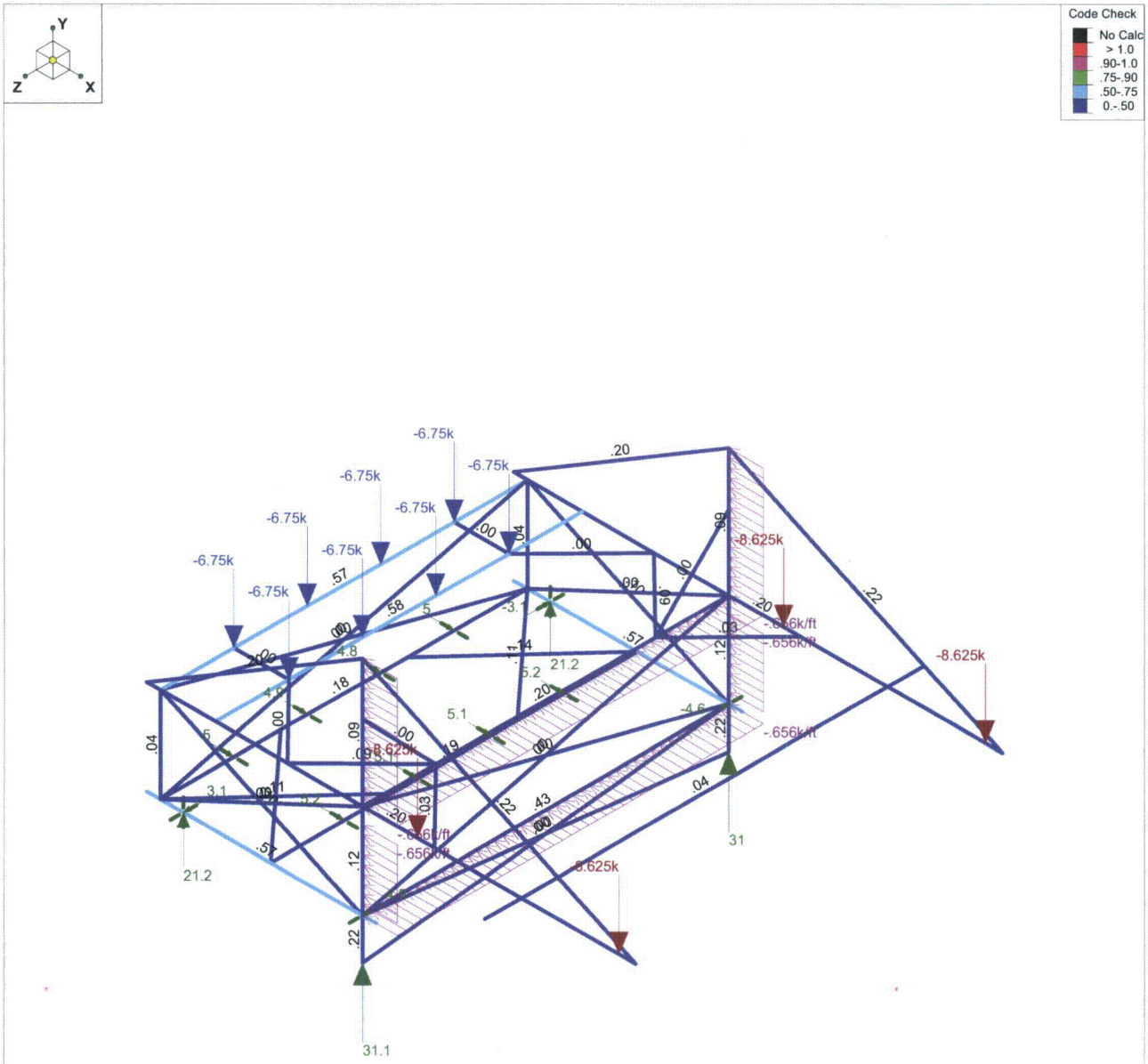

Member Code Checks Displayed
Loads: LC 5, DL+OL-WLX
Results for LC 5, DL+OL-WLX
Reaction units are k and k-ft

Precision Surveillance Corp	CR3 - BT3-120 & BT4-180 USF Design	
Brian Giometti		
CR-N1013-103		CR-N1013-103 BT3-120.BT4-180 ...

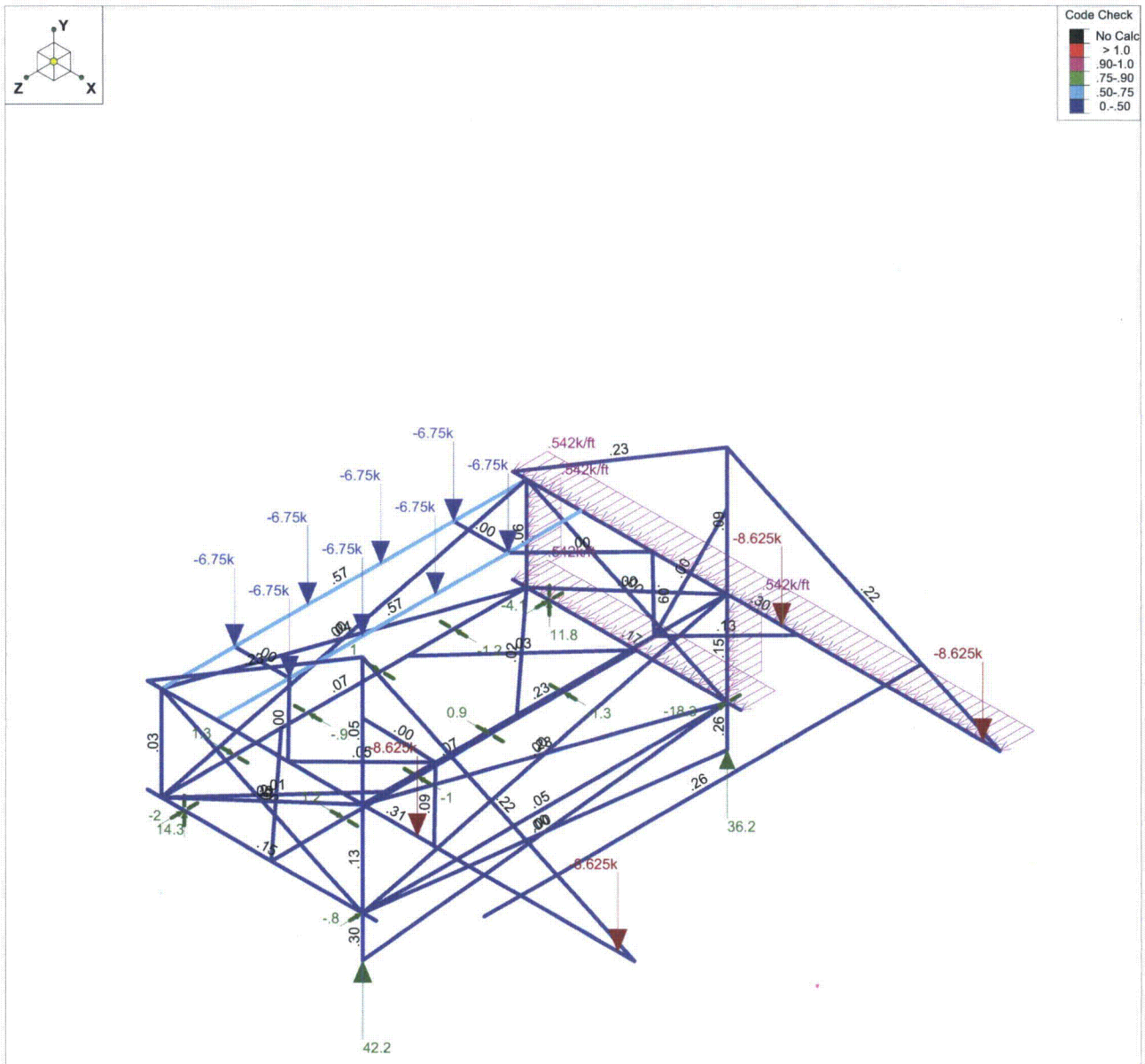

Member Code Checks Displayed
Loads: LC 6, DL+OL+WLZ
Results for LC 6, DL+OL+WLZ
Reaction units are k and k-ft

Precision Surveillance Corp	CR3 - BT3-120 & BT4-180 USF Design	
Brian Giometti		
CR-N1013-103		CR-N1013-103 BT3-120.BT4-180 ...

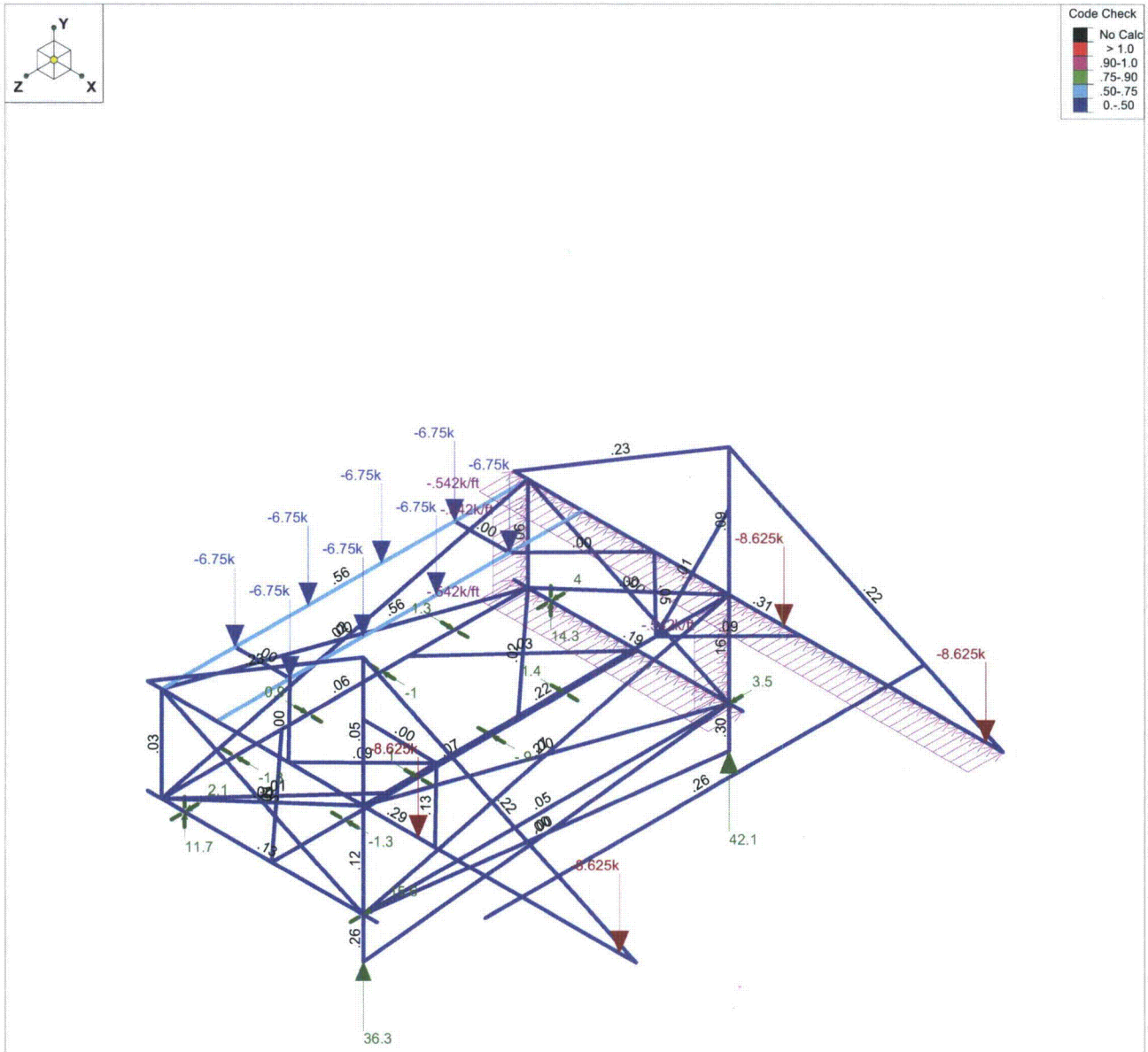

Member Code Checks Displayed
Loads: LC 7, DL+OL-WLZ
Results for LC 7, DL+OL-WLZ
Reaction units are k and k-ft

Precision Surveillance Corp	CR3 - BT3-120 & BT4-180 USF Design	
Brian Giometti		
CR-N1013-103		CR-N1013-103 BT3-120.BT4-180 ...

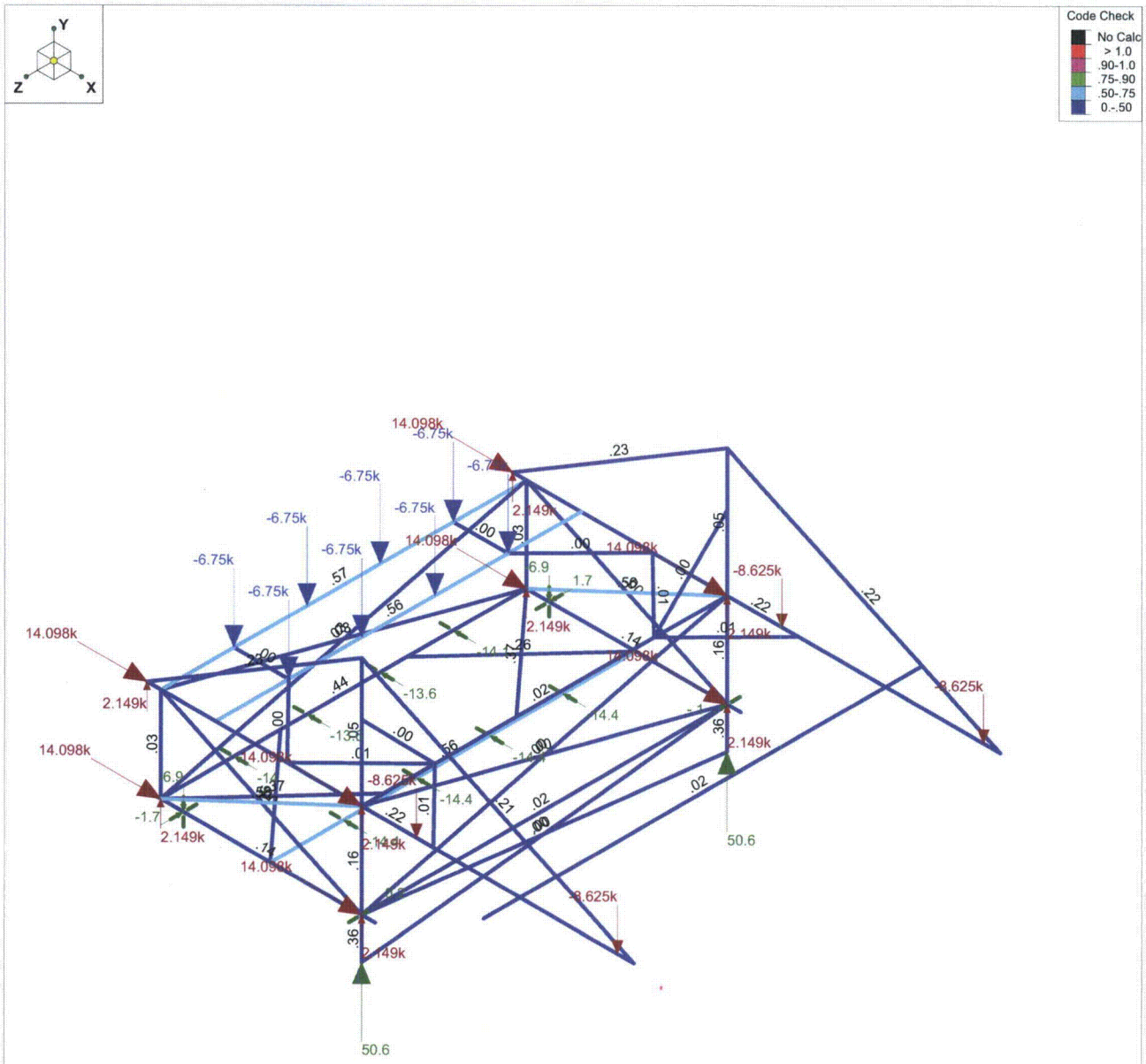

Member Code Checks Displayed
Loads: LC 8, DL+OL+0.7(ELX+ELY)
Results for LC 8, DL+OL+0.7(ELX+ELY)
Reaction units are k and k-ft

Precision Surveillance Corp	CR3 - BT3-120 & BT4-180 USF Design	
Brian Giometti		
CR-N1013-103		CR-N1013-103 BT3-120.BT4-180 ...

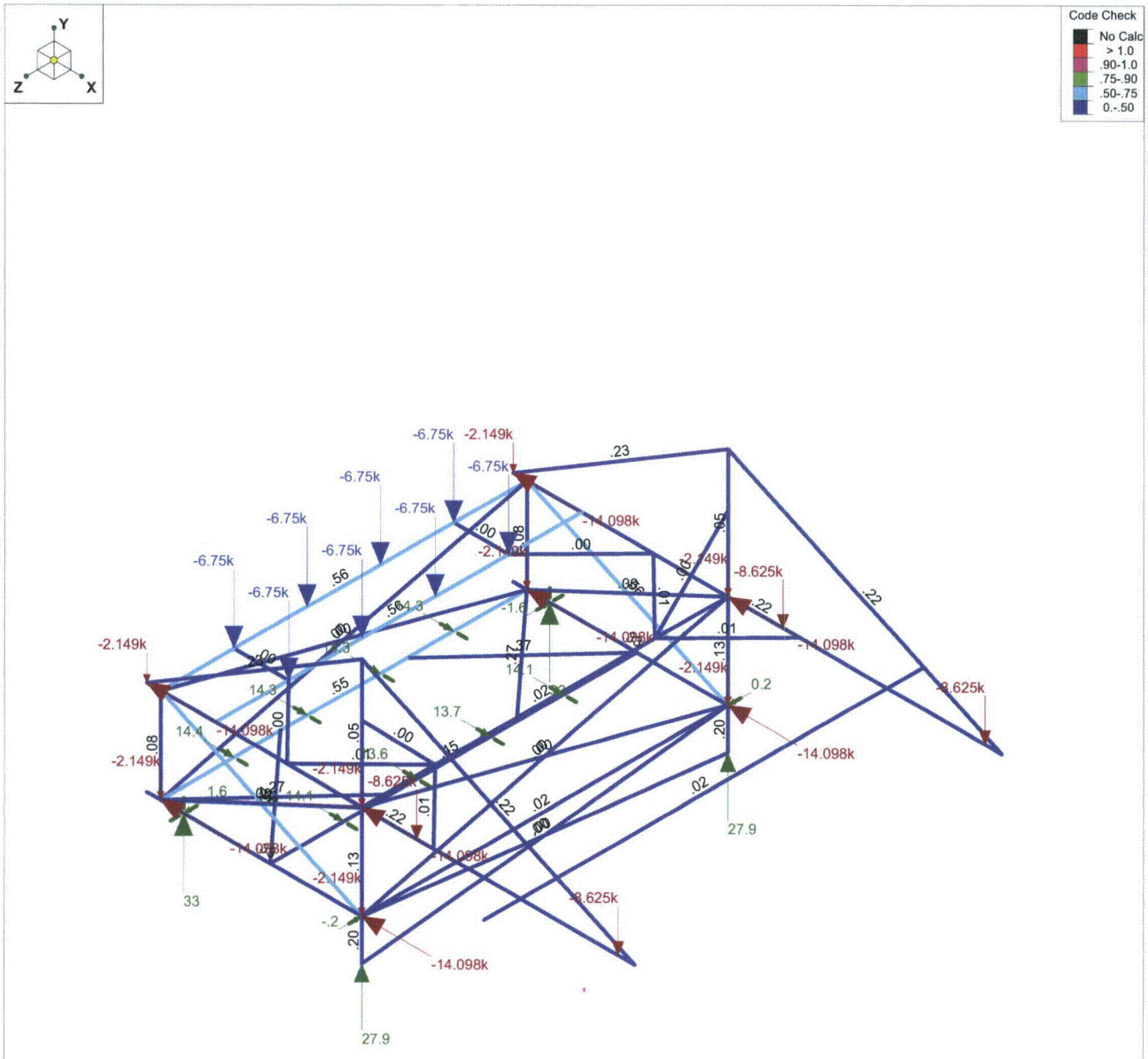

Member Code Checks Displayed
Loads: LC 9, DL+OL-0.7(ELX+ELY)
Results for LC 9, DL+OL-0.7(ELX+ELY)
Reaction units are k and k-ft

Precision Surveillance Corp	CR3 - BT3-120 & BT4-180 USF Design	
Brian Giometti		
CR-N1013-103		CR-N1013-103 BT3-120.BT4-180 ...

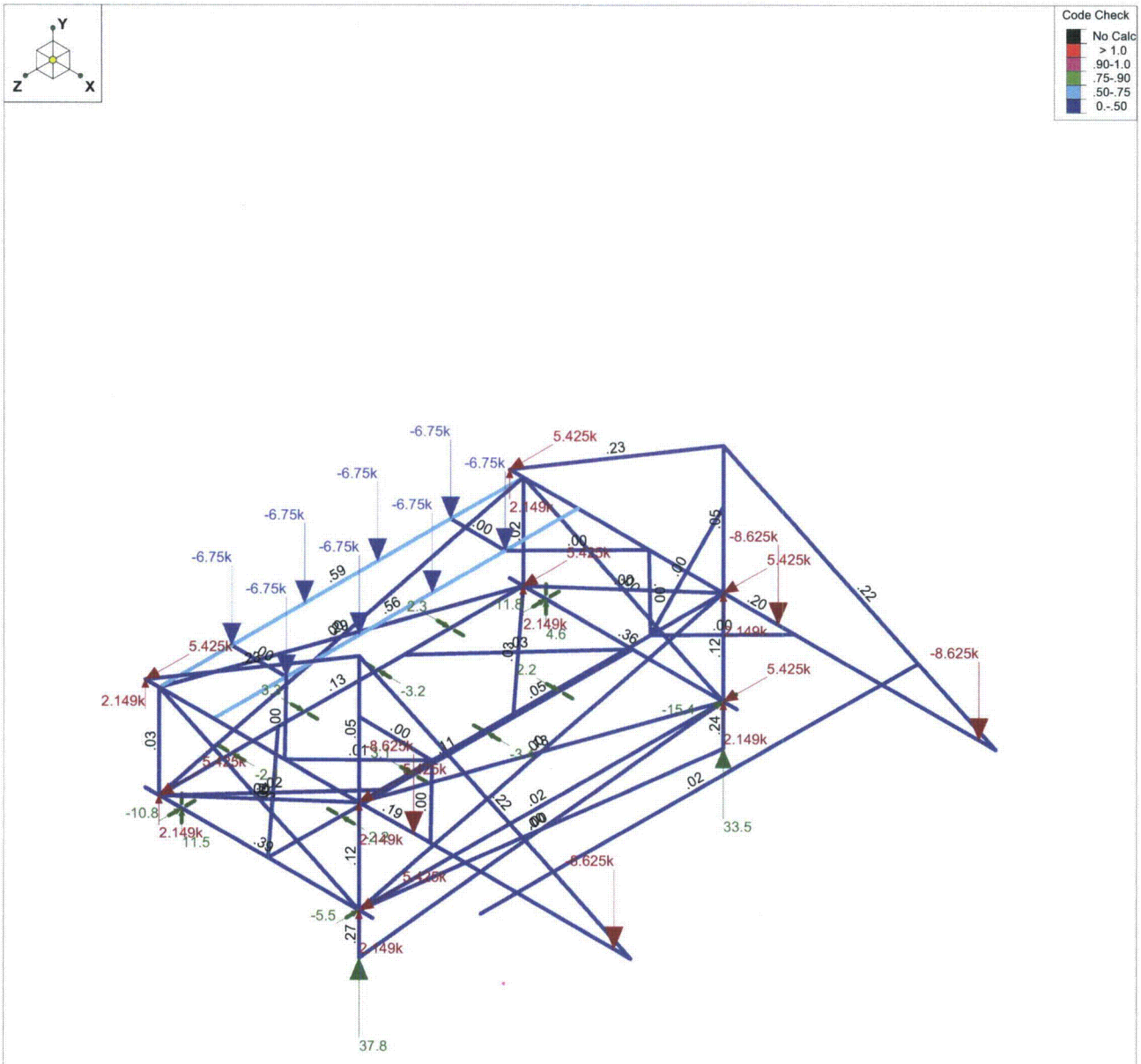

Member Code Checks Displayed
Loads: LC 10, DL+OL+0.7(ELZ+ELY)
Results for LC 10, DL+OL+0.7(ELZ+ELY)
Reaction units are k and k-ft

Precision Surveillance Corp	CR3 - BT3-120 & BT4-180 USF Design	
Brian Giometti		
CR-N1013-103		CR-N1013-103 BT3-120.BT4-180 ...

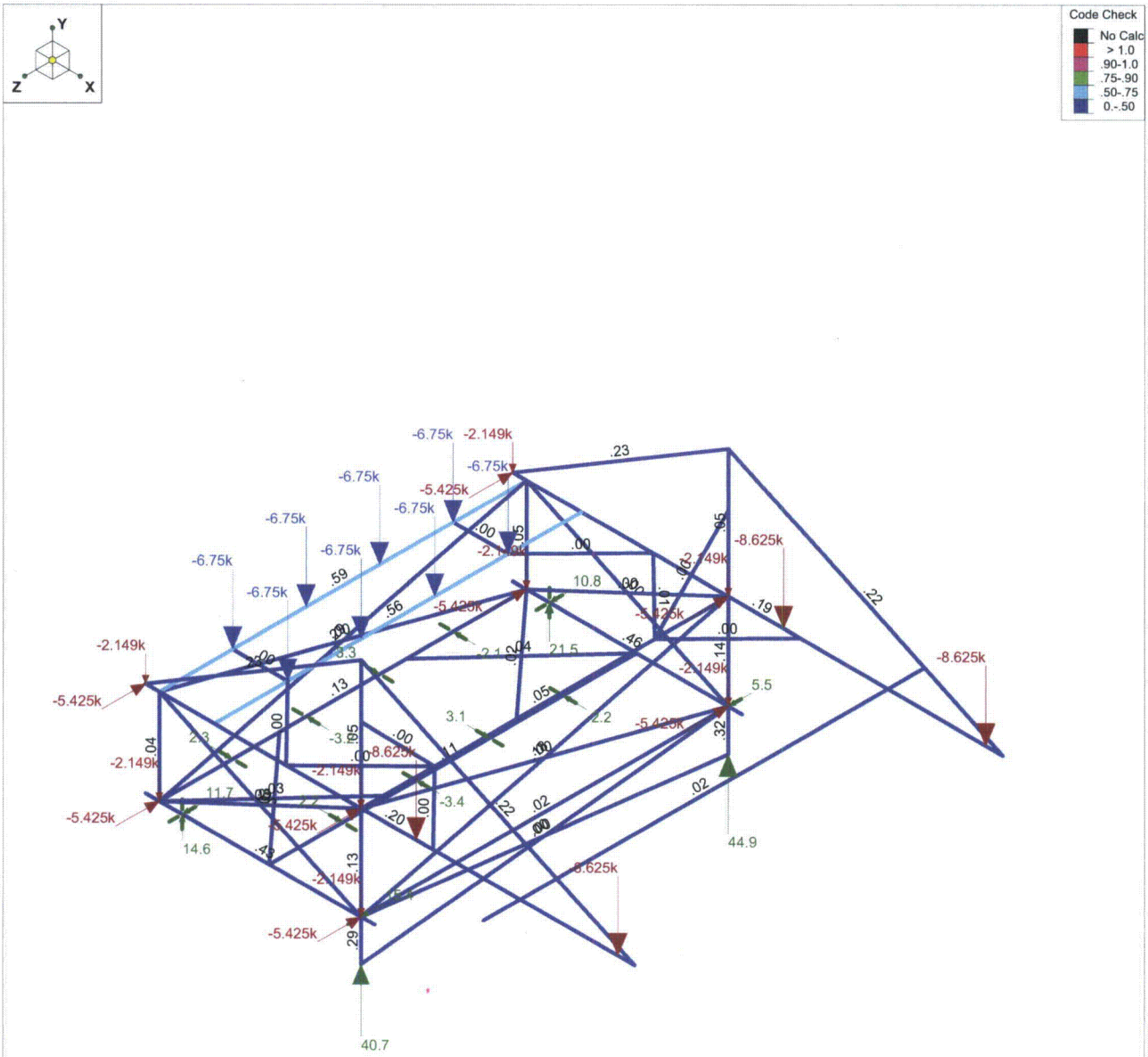

Member Code Checks Displayed
Loads: LC 11, DL+OL-0.7(ELZ+ELY)
Results for LC 11, DL+OL-0.7(ELZ+ELY)
Reaction units are k and k-ft

Precision Surveillance Corp	CR3 - BT3-120 & BT4-180 USF Design	
Brian Giometti		
CR-N1013-103		CR-N1013-103 BT3-120.BT4-180 ...

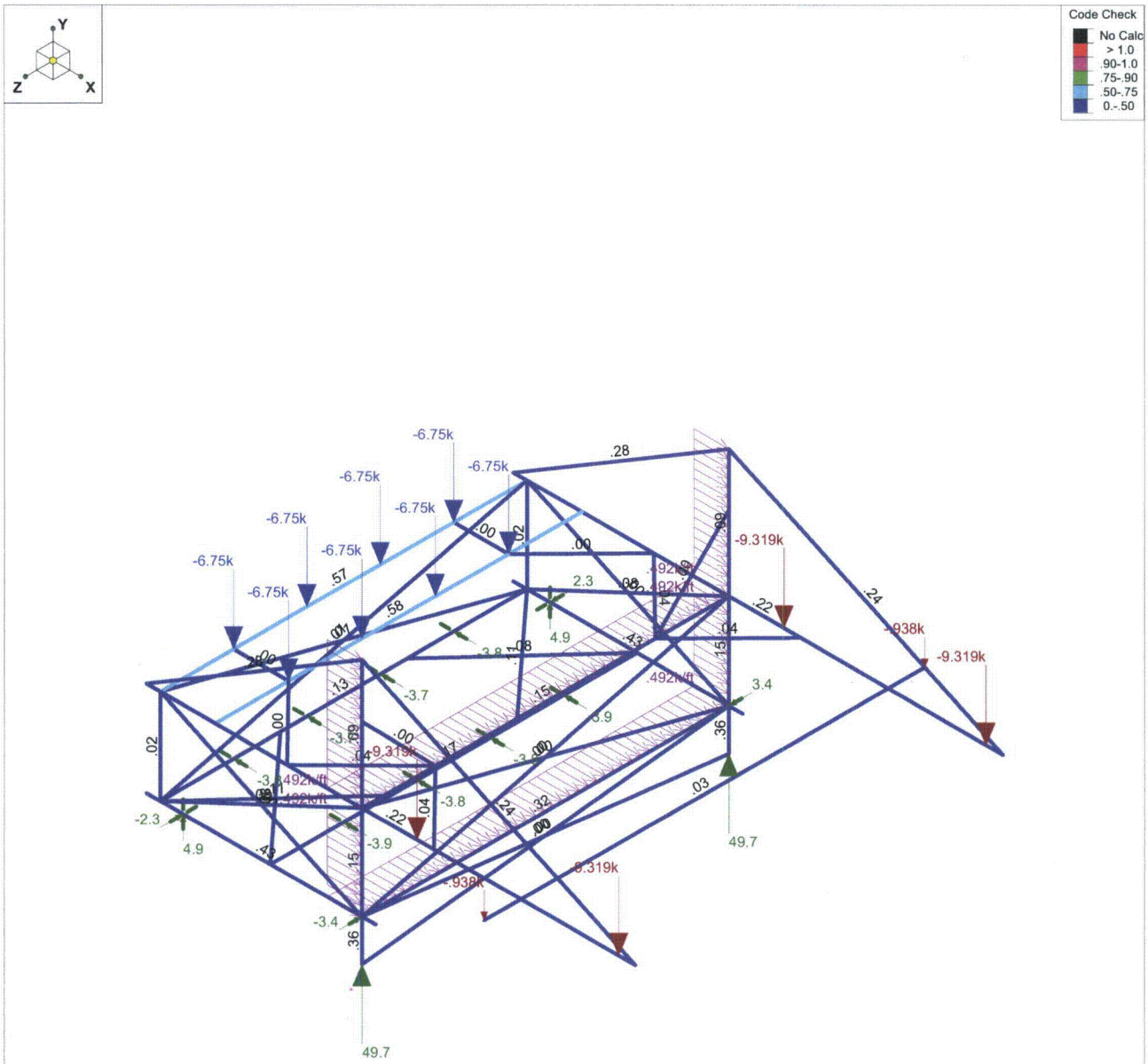

Member Code Checks Displayed
Loads: LC 12, DL+0.75LL+OL+0.75WLX
Results for LC 12, DL+0.75LL+OL+0.75WLX
Reaction units are k and k-ft

Precision Surveillance Corp	CR3 - BT3-120 & BT4-180 USF Design	
Brian Giometti		
CR-N1013-103		CR-N1013-103 BT3-120.BT4-180 ...

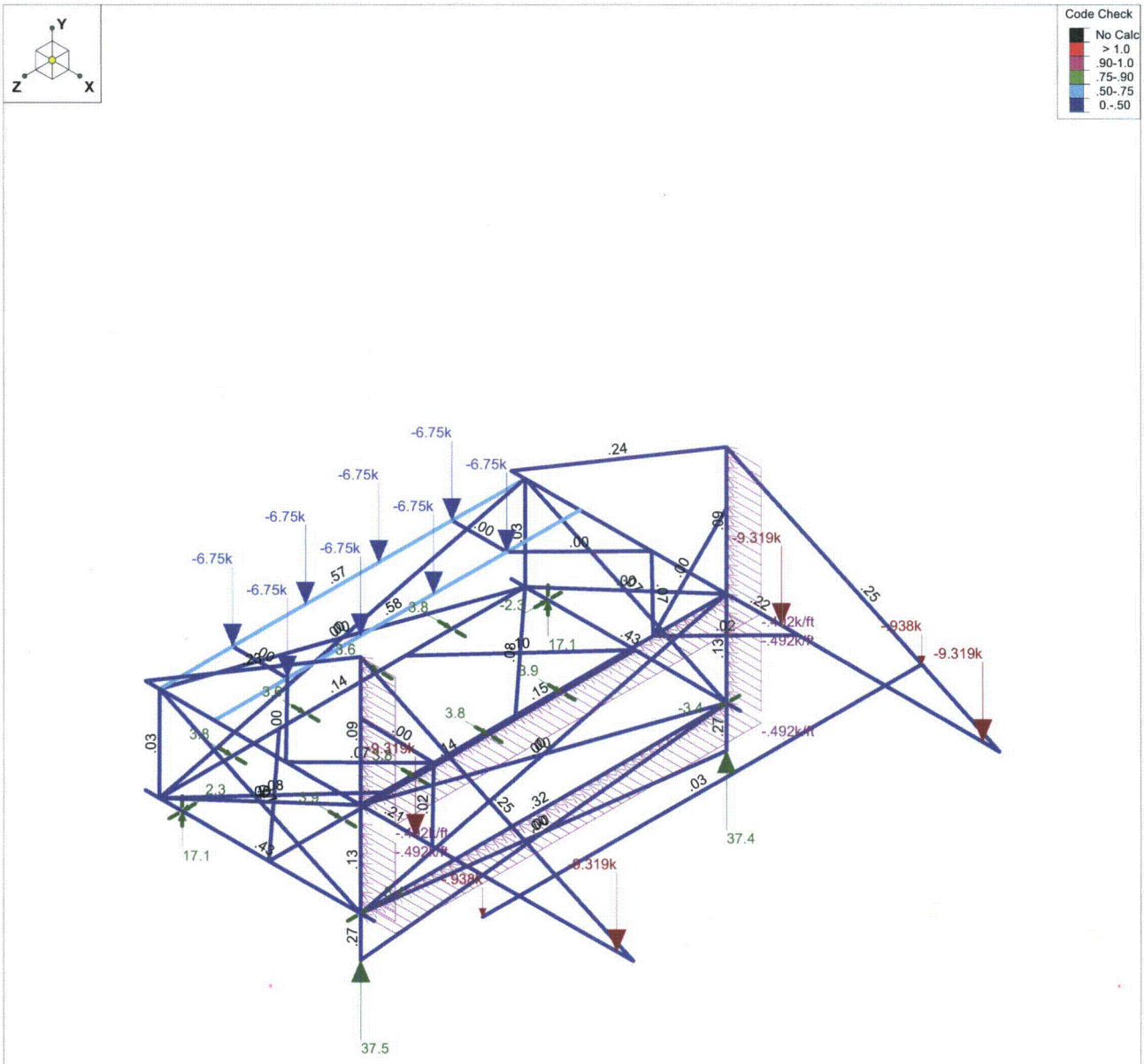

Member Code Checks Displayed
Loads: LC 13, DL+0.75LL+OL-0.75WLX
Results for LC 13, DL+0.75LL+OL-0.75WLX
Reaction units are k and k-ft

Precision Surveillance Corp	CR3 - BT3-120 & BT4-180 USF Design	
Brian Giometti		
CR-N1013-103		CR-N1013-103 BT3-120.BT4-180 ...

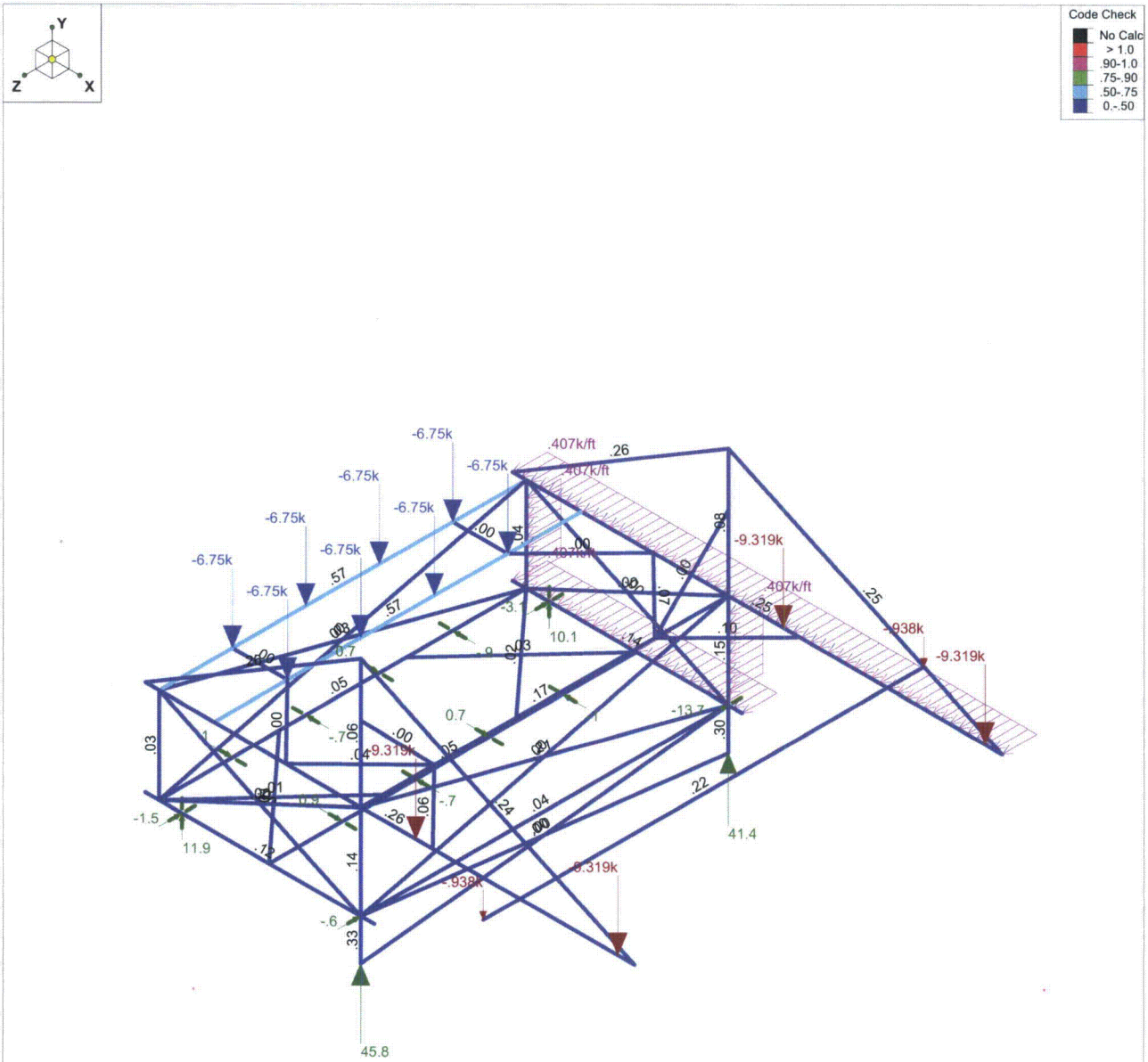

Member Code Checks Displayed
Loads: LC 14, DL+0.75LL+OL+0.75WLZ
Results for LC 14, DL+0.75LL+OL+0.75WLZ
Reaction units are k and k-ft

Precision Surveillance Corp	CR3 - BT3-120 & BT4-180 USF Design	
Brian Giometti		
CR-N1013-103		CR-N1013-103 BT3-120.BT4-180 ...

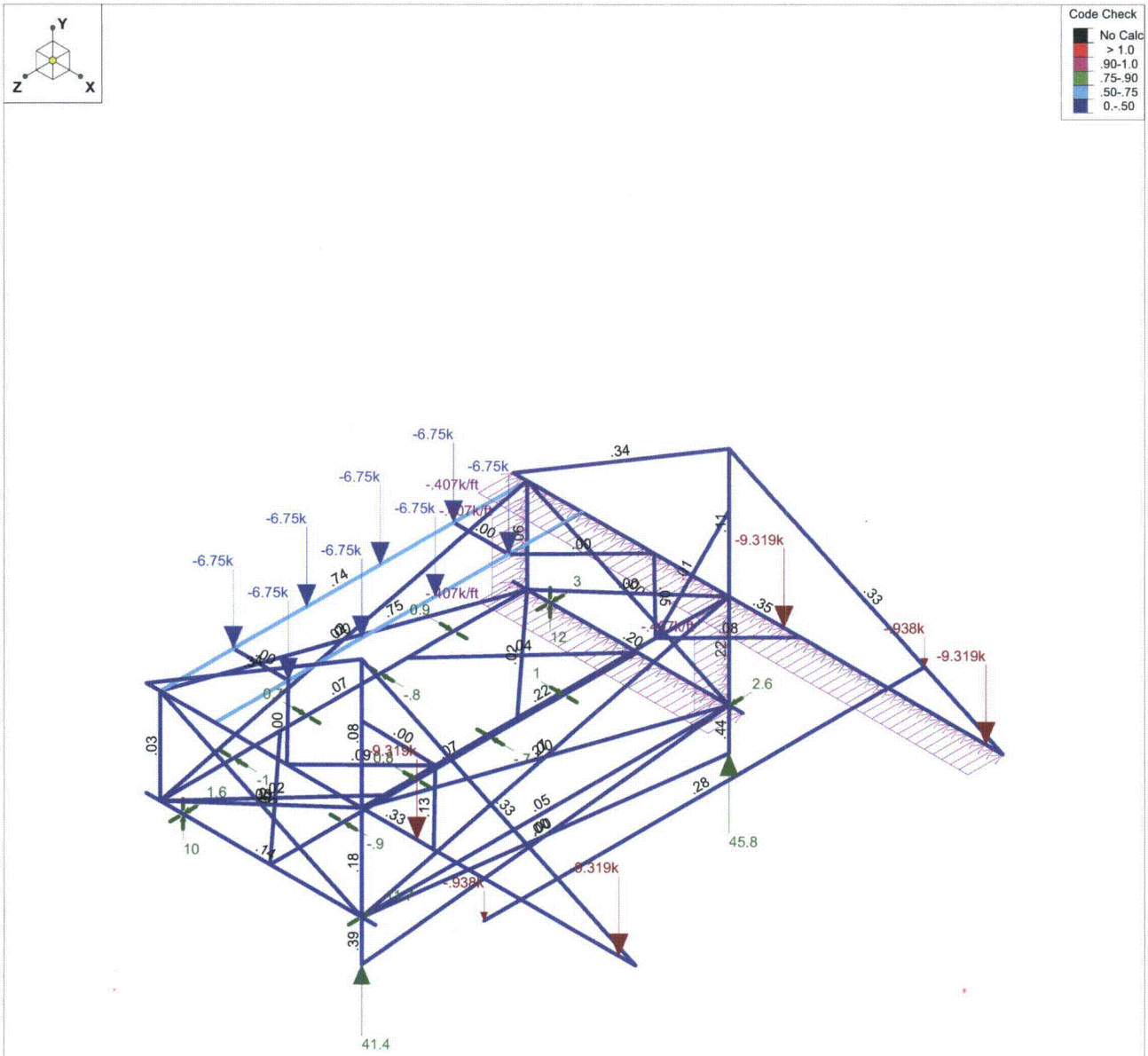

Member Code Checks Displayed
Loads: LC 15, DL+0.75LL+OL-0.75WLZ
Results for LC 15, DL+0.75LL+OL-0.75WLZ
Reaction units are k and k-ft

Precision Surveillance Corp	CR3 - BT3-120 & BT4-180 USF Design	
Brian Giometti		
CR-N1013-103		CR-N1013-103 BT3-120.BT4-180 ...

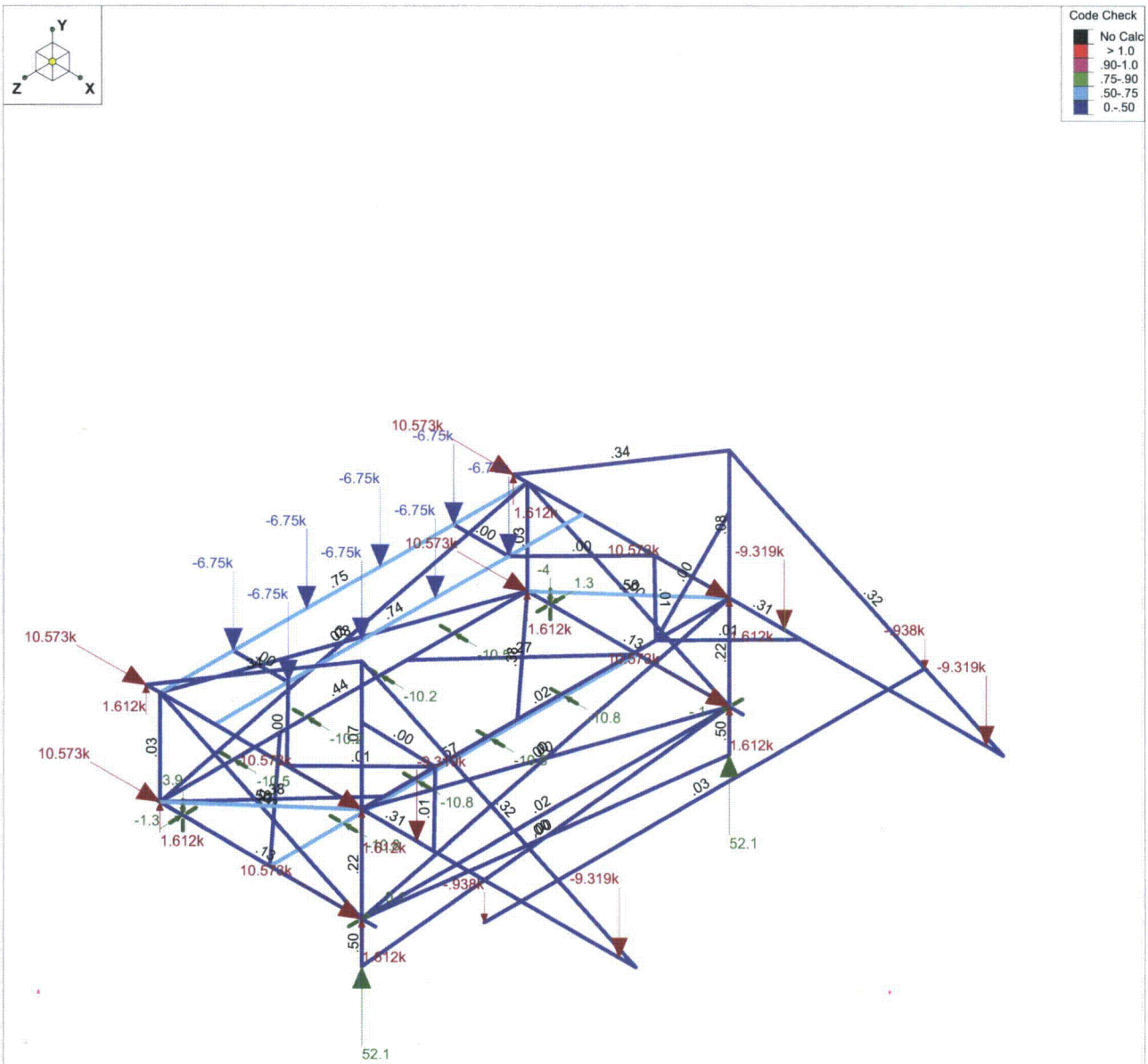

Member Code Checks Displayed
Loads: LC 16, DL+0.75LL+OL+0.75(0.7ELX+0.7ELY)
Results for LC 16, DL+0.75LL+OL+0.75(0.7ELX+0.7ELY)
Reaction units are k and k-ft

Precision Surveillance Corp	CR3 - BT3-120 & BT4-180 USF Design	
Brian Giometti		
CR-N1013-103		CR-N1013-103 BT3-120.BT4-180 ...

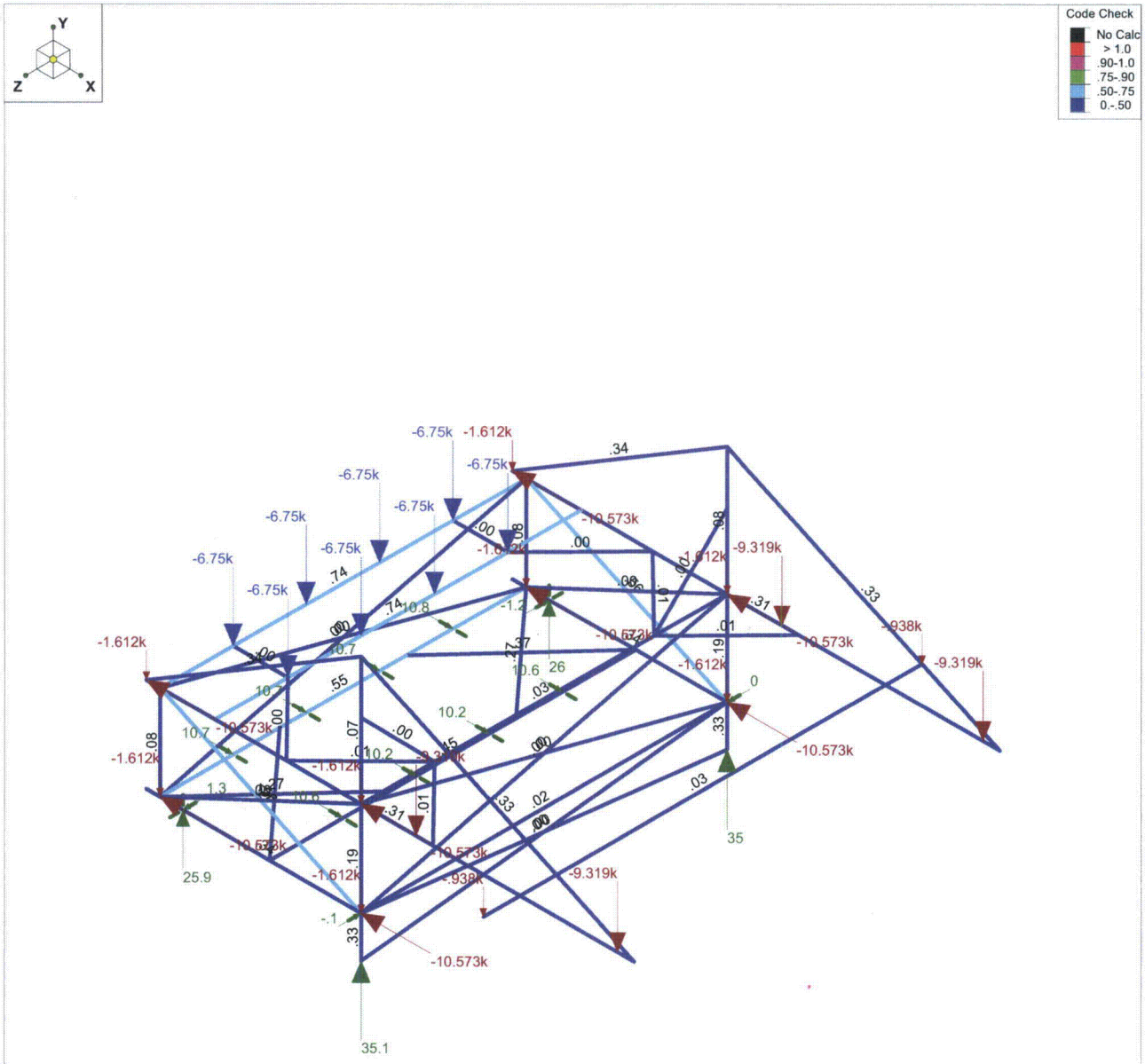

Member Code Checks Displayed
Loads: LC 17, DL+0.75LL+OL-0.75(0.7ELX+0.7ELY)
Results for LC 17, DL+0.75LL+OL-0.75(0.7ELX+0.7ELY)
Reaction units are k and k-ft

Precision Surveillance Corp	CR3 - BT3-120 & BT4-180 USF Design	
Brian Giometti		
CR-N1013-103		CR-N1013-103 BT3-120.BT4-180 ...

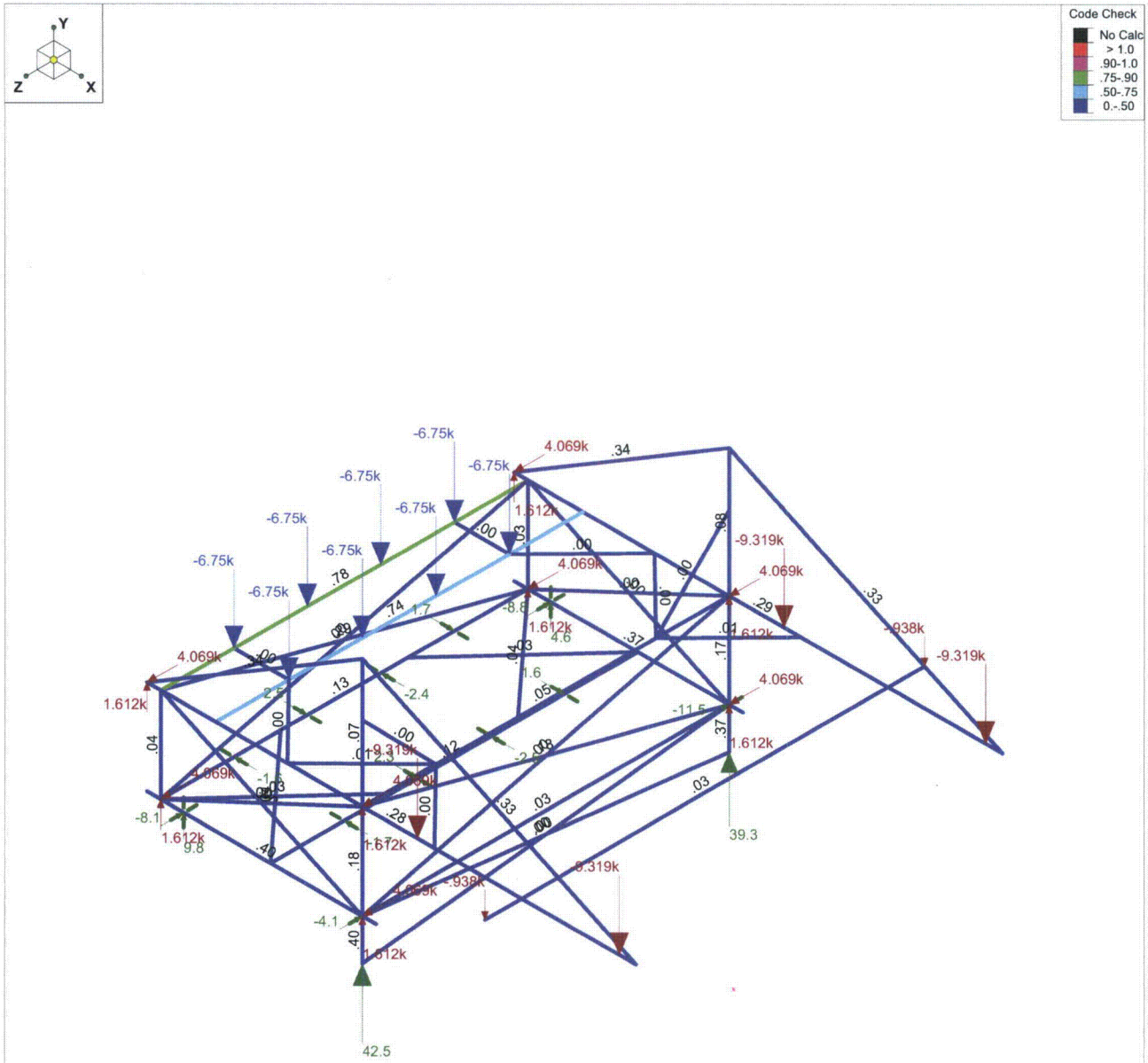

Member Code Checks Displayed
Loads: LC 18, DL+0.75LL+OL+0.75(0.7ELZ+0.7ELY)
Results for LC 18, DL+0.75LL+OL+0.75(0.7ELZ+0.7ELY)
Reaction units are k and k-ft

Precision Surveillance Corp	CR3 - BT3-120 & BT4-180 USF Design	
Brian Giometti		
CR-N1013-103		CR-N1013-103 BT3-120.BT4-180 ...

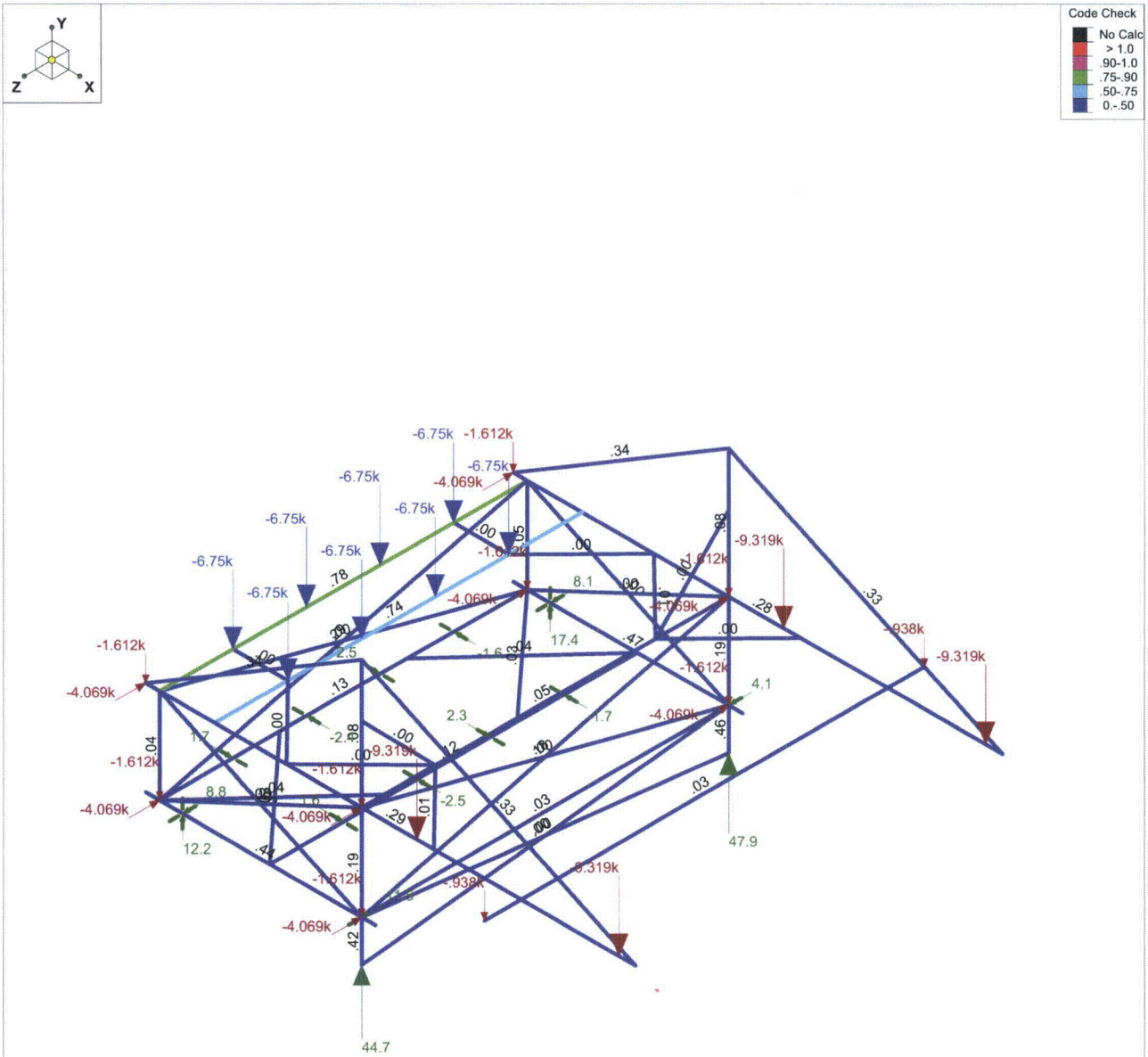

Member Code Checks Displayed
Loads: LC 19, DL+0.75LL+OL-0.75(0.7ELZ+0.7ELY)
Results for LC 19, DL+0.75LL+OL-0.75(0.7ELZ+0.7ELY)
Reaction units are k and k-ft

Precision Surveillance Corp	CR3 - BT3-120 & BT4-180 USF Design	
Brian Giometti		
CR-N1013-103		CR-N1013-103 BT3-120.BT4-180 ...

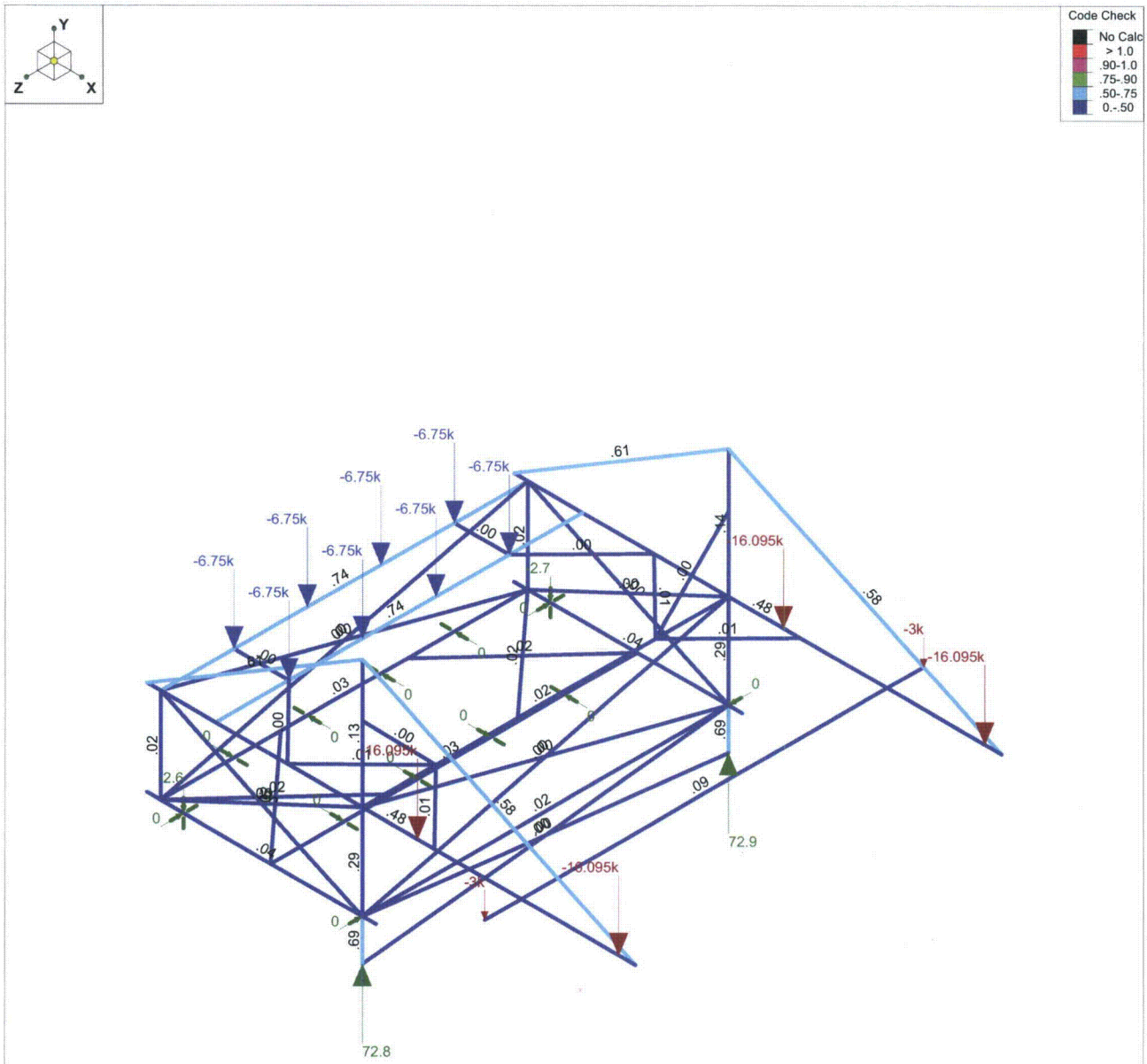

Member Code Checks Displayed
Loads: LC 20, 4:1 Equivalent
Results for LC 20, 4:1 Equivalent
Reaction units are k and k-ft

Precision Surveillance Corp	CR3 - BT3-120 & BT4-180 USF Design	
Brian Giometti		
CR-N1013-103		CR-N1013-103 BT3-120.BT4-180 ...

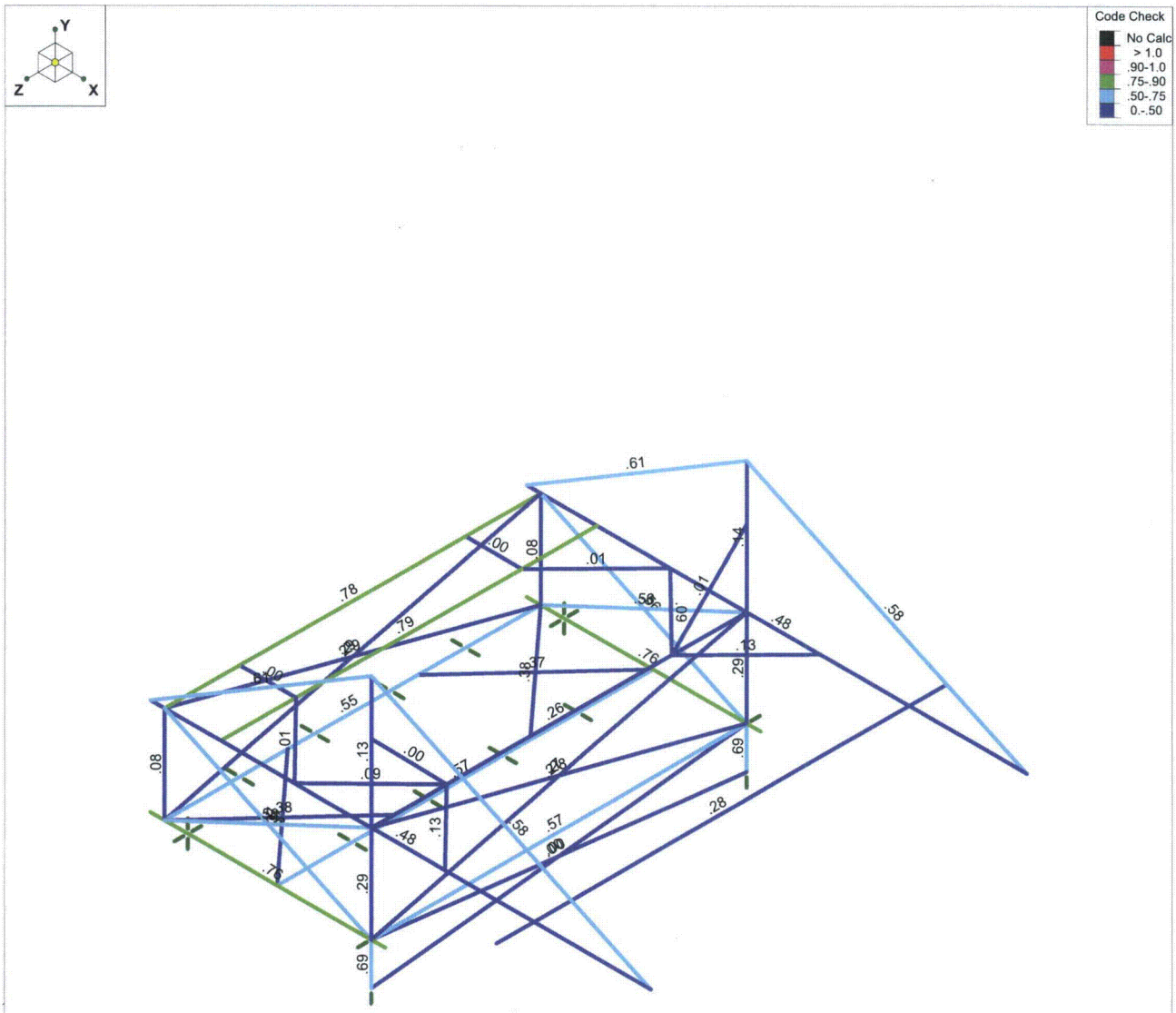

Member Code Checks Displayed
Solution: Envelope

Precision Surveillance Corp	CR3 - BT3-120 & BT4-180 USF Design	
Brian Giometti		
CR-N1013-103		CR-N1013-103 BT3-120.BT4-180 ...

Company : Precision Surveillance Corp
Designer : Brian Giometti
Job Number : CR-N1013-103 CR3 - BT3-120 & BT4-180 USF Design Checked By: CEC

Global

Display Sections for Member Calcs	2
Max Internal Sections for Member Calcs	100
Include Shear Deformation	Yes
Include Warping	Yes
Area Load Mesh (in^2)	144
Merge Tolerance (in)	.12
P-Delta Analysis Tolerance	0.50%
Vertical Axis	Y

Hot Rolled Steel Code	AISC: ASD 9th
Cold Formed Steel Code	AISI 99: ASD
Wood Code	NDS 91/97: ASD
Wood Temperature	< 100F
Concrete Code	ACI 1999

Number of Shear Regions	4
Region Spacing Increment (in)	4
Biaxial Column Method	PCA Load Contour
Parme Beta Factor (PCA)	.65
Concrete Stress Block	Rectangular
Use Cracked Sections	Yes
Bad Framing Warnings	No
Unused Force Warnings	Yes

Hot Rolled Steel Properties

	Label	E [ksi]	G [ksi]	Nu	Therm (\1E5 F)	Density[k/ft^3]	Yield[ksi]
1	HR_STL	29000	11154	.3	.65	.49	36
2	HR_LINK	1e+6		.3	.65	0	36

Material Takeoff

	Material	Size	Pieces	Length[ft]	Weight[K]
1	Hot Rolled Steel				
2	HR_STL	1.75 rod	4	60.3	.5
3	HR_STL	L3X3X4	4	81.6	.4
4	HR_STL	L4X4X4	6	89.9	.6
5	HR_STL	L4X4X8	8	45.3	.6
6	HR_STL	S18X54.7	1	24	1.3
7	HR_STL	TU4X4X6	6	40	.7
8	HR_STL	W14X43	5	85	3.6
9	HR_STL	W14X53	3	60	3.2
10	HR_STL	W21X73	2	53.3	3.9
11	HR_STL	W6X12	2	6	0
12	HR_STL	W8X40	6	28.9	1.1
13	Total HR Steel		47	574.3	16

Hot Rolled Steel Section Sets

	Label	Shape	Type	Design List	Material	Design Rules	A [in2]	Iyy [in4]	Izz [in4]	J [in4]
1	Kneebrace	L4X4X8	HBrace	Single Angle	HR_STL	Typical	3.75	5.56	5.56	.322
2	Outrigger	W21X73	Beam	Wide Flange	HR_STL	Typical	21.5	70.6	1600	3.02
3	Column	W8X40	Column	Wide Flange	HR_STL	Typical	11.7	49.1	146	1.12
4	1 3/4 Rod	1.75 rod	Beam	Round Def.	HR_STL	Typical	2.405	.46	.46	.921
5	Outrigger Cross	W14X43	Beam	Wide Flange	HR_STL	Typical	12.6	45.2	428	1.05
6	Trolley	S18X54.7	Beam	Wide Flange	HR_STL	Typical	16.1	20.8	804	2.37
7	CW Cross	W6X12	Beam	Wide Flange	HR_STL	Typical	3.55	2.99	22.1	.09

Company : Precision Surveillance Corp
Designer : Brian Giometti
Job Number : CR-N1013-103 CR3 - BT3-120 & BT4-180 USF Design Checked By: CEC

Hot Rolled Steel Section Sets (Continued)

	Label	Shape	Type	Design List	Material	Design Rules	A [in2]	Iyy [in4]	Izz [in4]	J [in4]
8	Base43	W14X43	Beam	Wide Flange	HR_STL	Typical	12.6	45.2	428	1.05
9	Base53	W14X53	Beam	Wide Flange	HR_STL	Typical	15.6	57.7	541	1.94
10	Back Angle Brace	L3X3X4	HBrace	Single Angle	HR_STL	Typical	1.44	1.24	1.24	.032
11	Angle Brace	L4X4X4	HBrace	Single Angle	HR_STL	Typical	1.94	3.04	3.04	.044
12	Stub Column	TU4X4X6	Column	SquareTube	HR_STL	Typical	5.08	10.7	10.7	18.4

Member Primary Data

	Label	I Joint	J Joint	K Joint	Rotate(deg)	Section/Shape	Type	Design List	Material	Design Rules
1	M1	N5	N6			Outrigger	Beam	Wide Flange	HR_STL	Typical
2	M2	N4	N7			Column	Column	Wide Flange	HR_STL	Typical
3	M3	N1	N2			Outrigger Cross	Beam	Wide Flange	HR_STL	Typical
4	M4	N3	N4			Outrigger Cross	Beam	Wide Flange	HR_STL	Typical
5	M5	N11	N8			Kneebrace	HBrace	Single Angle	HR_STL	Typical
6	M6	N13	N9			Kneebrace	HBrace	Single Angle	HR_STL	Typical
7	M7	N11	N10			Kneebrace	HBrace	Single Angle	HR_STL	Typical
8	M8	N13	N12			Kneebrace	HBrace	Single Angle	HR_STL	Typical
9	M9	N14	N10			Kneebrace	HBrace	Single Angle	HR_STL	Typical
10	M10	N15	N12			Kneebrace	HBrace	Single Angle	HR_STL	Typical
11	M11	N20	N21			Outrigger	Beam	Wide Flange	HR_STL	Typical
12	M12	N3	N22			Column	Column	Wide Flange	HR_STL	Typical
13	M13	N25	N24			Trolley	Beam	Wide Flange	HR_STL	Typical
14	M14	N26	N27			Outrigger Cross	Beam	Wide Flange	HR_STL	Typical
15	M15	N29	N8			CW Cross	Beam	Wide Flange	HR_STL	Typical
16	M16	N28	N9			CW Cross	Beam	Wide Flange	HR_STL	Typical
17	M17	N30	N31			Base43	Beam	Wide Flange	HR_STL	Typical
18	M18	N34	N35			Base43	Beam	Wide Flange	HR_STL	Typical
19	M19	N36	N32			Base53	Beam	Wide Flange	HR_STL	Typical
20	M20	N33	N37			Base53	Beam	Wide Flange	HR_STL	Typical
21	M21	N2	N36			Column	Column	Wide Flange	HR_STL	Typical
22	M22	N4	N37			Column	Column	Wide Flange	HR_STL	Typical
23	M23	N1	N32			Column	Column	Wide Flange	HR_STL	Typical
24	M24	N3	N33			Column	Column	Wide Flange	HR_STL	Typical
25	M25	N20	N22			1 3/4 Rod	Beam	Round Default	HR_STL	Typical
26	M26	N22	N21			1 3/4 Rod	Beam	Round Default	HR_STL	Typical
27	M27	N5	N7			1 3/4 Rod	Beam	Round Default	HR_STL	Typical
28	M28	N7	N6			1 3/4 Rod	Beam	Round Default	HR_STL	Typical
29	M29	N36	N1			Back Angle Br...	HBrace	Single Angle	HR_STL	Typical
30	M30	N32	N2			Back Angle Br...	HBrace	Single Angle	HR_STL	Typical
31	M31	N37	N40			Stub Column	Column	SquareTube	HR_STL	Typical
32	M32	N33	N39			Stub Column	Column	SquareTube	HR_STL	Typical
33	M33	N37	N39			Back Angle Br...	HBrace	Single Angle	HR_STL	Typical
34	M34	N33	N40			Back Angle Br...	HBrace	Single Angle	HR_STL	Typical
35	M35	N2	N37			Angle Brace	HBrace	Single Angle	HR_STL	Typical
36	M36	N4	N36			Angle Brace	HBrace	Single Angle	HR_STL	Typical
37	M37	N1	N33			Angle Brace	HBrace	Single Angle	HR_STL	Typical
38	M38	N3	N32			Angle Brace	HBrace	Single Angle	HR_STL	Typical
39	M39	N37	N3			Angle Brace	HBrace	Single Angle	HR_STL	Typical
40	M40	N33	N4			Angle Brace	HBrace	Single Angle	HR_STL	Typical
41	M41	N43	N10			Kneebrace	HBrace	Single Angle	HR_STL	Typical
42	M42	N44	N12			Kneebrace	HBrace	Single Angle	HR_STL	Typical
43	M43	N57	N51			Stub Column	Column	SquareTube	HR_STL	Typical
44	M44	N52	N59			Stub Column	Column	SquareTube	HR_STL	Typical
45	M45	N52	N51			Base53	Beam	Wide Flange	HR_STL	Typical
46	M46	N58	N32			Stub Column	Column	SquareTube	HR_STL	Typical
47	M47	N60	N36			Stub Column	Column	SquareTube	HR_STL	Typical

Company : Precision Surveillance Corp
Designer : Brian Giometti
Job Number : CR-N1013-103 CR3 - BT3-120 & BT4-180 USF Design Checked By: CEC

Member Advanced Data

	Label	I Release	J Release	I Offset[in]	J Offset[in]	T/C Only	Physical	TOM	Inactive
1	M1						Yes		
2	M2	BenPIN	BenPIN				Yes		
3	M3	BenPIN	BenPIN				Yes		
4	M4	BenPIN	BenPIN				Yes		
5	M5	BenPIN	BenPIN				Yes		
6	M6	BenPIN	BenPIN				Yes		
7	M7	BenPIN	BenPIN				Yes		
8	M8	BenPIN	BenPIN				Yes		
9	M9	BenPIN	BenPIN				Yes		
10	M10	BenPIN	BenPIN				Yes		
11	M11						Yes		
12	M12		BenPIN				Yes		
13	M13						Yes		
14	M14	BenPIN	BenPIN				Yes		
15	M15	BenPIN	BenPIN				Yes		
16	M16	BenPIN	BenPIN				Yes		
17	M17						Yes		
18	M18						Yes		
19	M19	BenPIN	BenPIN				Yes		
20	M20						Yes		
21	M21	BenPIN	BenPIN	M1	M18		Yes		
22	M22	BenPIN	BenPIN	M1	M18		Yes		
23	M23	BenPIN	BenPIN	M11	M17		Yes		
24	M24	BenPIN	BenPIN	M11	M17		Yes		
25	M25	BenPIN	BenPIN			Tension Only	Yes		
26	M26	BenPIN	BenPIN			Tension Only	Yes		
27	M27	BenPIN	BenPIN			Tension Only	Yes		
28	M28	BenPIN	BenPIN			Tension Only	Yes		
29	M29	BenPIN	BenPIN			Tension Only	Yes		
30	M30	BenPIN	BenPIN			Euler Buckling	Yes		
31	M31	BenPIN					Yes		
32	M32	BenPIN					Yes		
33	M33	BenPIN	BenPIN			Euler Buckling	Yes		
34	M34	BenPIN	BenPIN			Euler Buckling	Yes		
35	M35					Euler Buckling	Yes		
36	M36					Euler Buckling	Yes		
37	M37					Euler Buckling	Yes		
38	M38					Euler Buckling	Yes		
39	M39	BenPIN	BenPIN			Tension Only	Yes		
40	M40	BenPIN	BenPIN			Euler Buckling	Yes		
41	M41	BenPIN	BenPIN				Yes		
42	M42	BenPIN	BenPIN				Yes		
43	M43	BenPIN	BenPIN				Yes		
44	M44	BenPIN	BenPIN				Yes		
45	M45	BenPIN	BenPIN				Yes		
46	M46	BenPIN	BenPIN				Yes		
47	M47	BenPIN	BenPIN				Yes		

Joint Coordinates and Temperatures

	Label	X [ft]	Y [ft]	Z [ft]	Temp [F]	Detach From Diap...
1	N1	-11	5.167	0	0	
2	N2	-11	5.167	20	0	
3	N3	0	5.167	0	0	
4	N4	0	5.167	20	0	
5	N5	-11.75	5.167	20	0	

Company : Precision Surveillance Corp
Designer : Brian Giometti
Job Number : CR-N1013-103 CR3 - BT3-120 & BT4-180 USF Design Checked By: CEC

Joint Coordinates and Temperatures (Continued)

	Label	X [ft]	Y [ft]	Z [ft]	Temp [F]	Detach From Diap...
6	N6	14.916	5.167	20	0	
7	N7	0	12.167	20	0	
8	N8	-8	5.167	16	0	
9	N9	-8	5.167	4	0	
10	N10	0	5.167	16	0	
11	N11	-4.083	5.167	20	0	
12	N12	0	5.167	4	0	
13	N13	-4.083	5.167	0	0	
14	N14	3.917	5.167	20	0	
15	N15	3.917	5.167	0	0	
16	N16	3	5.167	0	0	
17	N17	3	5.167	20	0	
18	N18	14	5.167	0	0	
19	N19	14	5.167	20	0	
20	N20	-11.75	5.167	0	0	
21	N21	14.916	5.167	0	0	
22	N22	0	12.167	0	0	
23	N23	8.667	5.167	0	0	
24	N24	8.667	5.167	22	0	
25	N25	8.667	5.167	-2	0	
26	N26	-8	5.167	0	0	
27	N27	-8	5.167	20	0	
28	N28	-11	5.167	3.999667	0	
29	N29	-11	5.167	16	0	
30	N30	-11.75	0	0	0	
31	N31	.75	0	0	0	
32	N32	-11	0	0	0	
33	N33	0	0	0	0	
34	N34	-11.75	0	20	0	
35	N35	.75	0	20	0	
36	N36	-11	0	20	0	
37	N37	0	0	20	0	
38	N38	8.667	5.167	20	0	
39	N39	0	-2.25	0	0	
40	N40	0	-2.25	20	0	
41	N41	-9.75	0	0	0	
42	N42	-9.75	0	20	0	
43	N43	-0.	9.25	20	0	
44	N44	-0	9.25	0	0	
45	N45	-11	0	4	0	
46	N46	-11	0	8	0	
47	N47	-11	0	12	0	
48	N48	-11	0	16	0	
49	N49	-7	0	0	0	
50	N50	-7	0	20	0	
51	N51	-5	0	0	0	
52	N52	-5	0	20	0	
53	N53	-5	0	4	0	
54	N54	-5	0	8	0	
55	N55	-5	0	12	0	
56	N56	-5	0	16	0	
57	N57	-11	0	6.5475	0	
58	N58	-5	0	6.5475	0	
59	N59	-11	0	13.452	0	
60	N60	-5	0	13.452	0	
61	N63	-11	0	10	0	
62	N64	-5	0	10	0	

Company : Precision Surveillance Corp
Designer : Brian Giometti
Job Number : CR-N1013-103 CR3 - BT3-120 & BT4-180 USF Design Checked By: CEC

Joint Coordinates and Temperatures (Continued)

	Label	X [ft]	Y [ft]	Z [ft]	Temp [F]	Detach From Diap...
63	N63A	-8	0	3.27125	0	
64	N64A	-8	0	16.7285	0	

Joint Boundary Conditions

	Joint Label	X [k/in]	Y [k/in]	Z [k/in]	X Rot.[k-ft/rad]	Y Rot.[k-ft/rad]	Z Rot.[k-ft/rad]	Footing
1	N4							
2	N3							
3	N2							
4	N5							
5	N8							
6	N11							
7	N27							
8	N29							
9	N14							
10	N17							
11	N15							
12	N16							
13	N1							
14	N9							
15	N13							
16	N20							
17	N26							
18	N34							
19	N30							
20	N35							
21	N31							
22	N33			Reaction				
23	N37			Reaction				
24	N36							
25	N32							
26	N39		Reaction					
27	N40		Reaction					
28	N41		Reaction	Reaction				
29	N42		Reaction	Reaction				
30	N43							
31	N44							
32	N45	Reaction						
33	N46	Reaction						
34	N47	Reaction						
35	N48	Reaction						
36	N49							
37	N50							
38	N51							
39	N52							
40	N53	Reaction						
41	N54	Reaction						
42	N55	Reaction						
43	N56	Reaction						
44	N57							
45	N58							
46	N59							
47	N60							
48	N63							
49	N64							

Company : Precision Surveillance Corp
Designer : Brian Giometti
Job Number : CR-N1013-103 CR3 - BT3-120 & BT4-180 USF Design Checked By: CEC

Hot Rolled Steel Design Parameters

	Label	Shape	Length...	Lbyy[ft]	Lbzz[ft]	Lcomp to...	Lcomp b...	Kyy	Kzz	Cm-yy	Cm-zz	Cb	y sway	z sway	Function
1	M1	Outrigger	26.666	4		4	4								Lateral
2	M2	Column	7												Lateral
3	M3	Outrigger...	20			10	10								Lateral
4	M4	Outrigger...	20	10	10	10	10								Lateral
5	M5	Kneebrace	5.598												Lateral
6	M6	Kneebrace	5.598												Lateral
7	M7	Kneebrace	5.716												Lateral
8	M8	Kneebrace	5.716												Lateral
9	M9	Kneebrace	5.598												Lateral
10	M10	Kneebrace	5.598												Lateral
11	M11	Outrigger	26.666	4		4	4								Lateral
12	M12	Column	7												Lateral
13	M13	Trolley	24	12	20	20									Lateral
14	M14	Outrigger...	20			10	10								Lateral
15	M15	CW Cross	3												Lateral
16	M16	CW Cross	3												Lateral
17	M17	Base43	12.5												Lateral
18	M18	Base43	12.5												Lateral
19	M19	Base53	20												Lateral
20	M20	Base53	20	10											Lateral
21	M21	Column	5.167												Lateral
22	M22	Column	5.167												Lateral
23	M23	Column	5.167												Lateral
24	M24	Column	5.167												Lateral
25	M25	1 3/4 Rod	13.677												Lateral
26	M26	1 3/4 Rod	16.477												Lateral
27	M27	1 3/4 Rod	13.677												Lateral
28	M28	1 3/4 Rod	16.477												Lateral
29	M29	Back Ang...	20.657												Lateral
30	M30	Back Ang...	20.657												Lateral
31	M31	Stub Col...	2.25												Lateral
32	M32	Stub Col...	2.25												Lateral
33	M33	Back Ang...	20.126												Lateral
34	M34	Back Ang...	20.126												Lateral
35	M35	Angle Br...	12.153												Lateral
36	M36	Angle Br...	12.153												Lateral
37	M37	Angle Br...	12.153												Lateral
38	M38	Angle Br...	12.153												Lateral
39	M39	Angle Br...	20.657												Lateral
40	M40	Angle Br...	20.657												Lateral
41	M41	Kneebrace	5.716												Lateral
42	M42	Kneebrace	5.716												Lateral
43	M43	Stub Col...	8.881												Lateral
44	M44	Stub Col...	8.881												Lateral
45	M45	Base53	20												Lateral
46	M46	Stub Col...	8.881												Lateral
47	M47	Stub Col...	8.881												Lateral

Joint Loads and Enforced Displacements (BLC 2 : Platform Dead)

	Joint Label	L,D,M	Direction	Magnitude[(k,k-ft), (in,rad), (k*s^2/f...
1	N17	L	Y	-3.75
2	N19	L	Y	-3.75
3	N16	L	Y	-3.75
4	N18	L	Y	-3.75

Company : Precision Surveillance Corp
Designer : Brian Giometti
Job Number : CR-N1013-103 CR3 - BT3-120 & BT4-180 USF Design Checked By: CEC

Joint Loads and Enforced Displacements (BLC 3 : Platform Live)

	Joint Label	L,D,M	Direction	Magnitude[(k,k-ft), (in,rad), (k*s^2/f...
1	N17	L	Y	-.925
2	N16	L	Y	-.925
3	N18	L	Y	-.925
4	N19	L	Y	-.925

Joint Loads and Enforced Displacements (BLC 4 : Coiler/Tendon/Pump)

	Joint Label	L,D,M	Direction	Magnitude[(k,k-ft), (in,rad), (k*s^2/f...
1	N17	L	Y	-3.875
2	N16	L	Y	-3.875
3	N18	L	Y	-3.875
4	N19	L	Y	-3.875

Joint Loads and Enforced Displacements (BLC 5 : Ram/Pump)

	Joint Label	L,D,M	Direction	Magnitude[(k,k-ft), (in,rad), (k*s^2/f...
1	N17	L	Y	-2.69
2	N16	L	Y	-2.69
3	N18	L	Y	-2.69
4	N19	L	Y	-2.69

Joint Loads and Enforced Displacements (BLC 6 : Tractel Motors)

	Joint Label	L,D,M	Direction	Magnitude[(k,k-ft), (in,rad), (k*s^2/f...
1	N17	L	Y	-1
2	N16	L	Y	-1
3	N18	L	Y	-1
4	N19	L	Y	-1

Joint Loads and Enforced Displacements (BLC 8 : Spider Baskets)

	Joint Label	L,D,M	Direction	Magnitude[(k,k-ft), (in,rad), (k*s^2/f...
1	N24	L	Y	-1.25
2	N25	L	Y	-1.25

Joint Loads and Enforced Displacements (BLC 11 : Seismic X-DIR)

	Joint Label	L,D,M	Direction	Magnitude[(k,k-ft), (in,rad), (k*s^2/f...
1	N5	L	X	20.14
2	N20	L	X	20.14
3	N4	L	X	20.14
4	N3	L	X	20.14
5	N36	L	X	20.14
6	N32	L	X	20.14
7	N33	L	X	20.14
8	N37	L	X	20.14

Joint Loads and Enforced Displacements (BLC 12 : Seismic Z-DIR)

	Joint Label	L,D,M	Direction	Magnitude[(k,k-ft), (in,rad), (k*s^2/f...
1	N5	L	Z	7.75
2	N20	L	Z	7.75
3	N4	L	Z	7.75
4	N3	L	Z	7.75
5	N36	L	Z	7.75
6	N32	L	Z	7.75
7	N33	L	Z	7.75
8	N37	L	Z	7.75

Joint Loads and Enforced Displacements (BLC 13 : Seismic Y-Dir)

Joint Label	L,D,M	Direction	Magnitude[(k,k-ft), (in,rad), (k*s^2/f

Company : Precision Surveillance Corp
Designer : Brian Giometti
Job Number : CR-N1013-103 CR3 - BT3-120 & BT4-180 USF Design Checked By: CEC

Joint Loads and Enforced Displacements (BLC 13 : Seismic Y-Dir) (Continued)

	Joint Label	L,D,M	Direction	Magnitude[(k,k-ft), (in,rad), (k*s^2/f...
1	N5	L	Y	3.07
2	N20	L	Y	3.07
3	N4	L	Y	3.07
4	N3	L	Y	3.07
5	N36	L	Y	3.07
6	N32	L	Y	3.07
7	N33	L	Y	3.07
8	N37	L	Y	3.07

Member Point Loads (BLC 7 : Counterweight)

	Member Label	Direction	Magnitude[k,k-ft]	Location[ft,%]
1	M3	Y	-6.75	8
2	M3	Y	-6.75	4
3	M3	Y	-6.75	16
4	M3	Y	-6.75	12
5	M14	Y	-6.75	8
6	M14	Y	-6.75	4
7	M14	Y	-6.75	16
8	M14	Y	-6.75	12

Member Distributed Loads (BLC 9 : Wind X-DIR 300)

	Member Label	Direction	Start Magnitude[k/ft,...	End Magnitude[k/ft,d...	Start Location[ft,%]	End Location[ft,%]
1	M4	X	.656	.656	0	0
2	M12	X	.656	.656	0	0
3	M2	X	.656	.656	0	0
4	M22	X	.656	.656	0	0
5	M20	X	.656	.656	0	0
6	M24	X	.656	.656	0	0

Member Distributed Loads (BLC 10 : Wind Z-DIR 300)

	Member Label	Direction	Start Magnitude[k/ft,...	End Magnitude[k/ft,d...	Start Location[ft,%]	End Location[ft,%]
1	M11	Z	.542	.542	0	0
2	M23	Z	.542	.542	0	0
3	M17	Z	.542	.542	0	0
4	M24	Z	.542	.542	0	0

Member Area Loads

Joint A	Joint B	Joint C	Joint D	Direction	Distribution	Magnitude[ksf]
No Data to Print ...						

Basic Load Cases

	BLC Description	Category	X Gravity	Y Gravity	Z Gravity	Joint	Point	Distributed	Area (Me...	Surface (...
1	Selfweight	DL		-1						
2	Platform Dead	DL				4				
3	Platform Live	LL				4				
4	Coiler/Tendon/Pump	OL4				4				
5	Ram/Pump	OL5				4				
6	Tractel Motors	DL				4				
7	Counterweight	DL					8			
8	Spider Baskets	LL				2				
9	Wind X-DIR 300	WLX						6		

Company : Precision Surveillance Corp
Designer : Brian Giometti
Job Number : CR-N1013-103 CR3 - BT3-120 & BT4-180 USF Design Checked By: CEC

Basic Load Cases (Continued)

	BLC Description	Category	X Gravity	Y Gravity	Z Gravity	Joint	Point	Distributed	Area (Me...	Surface (...
10	Wind Z-DIR 300	WLZ						4		
11	Seismic X-DIR	ELX				8				
12	Seismic Z-DIR	ELZ				8				
13	Seismic Y-Dir	ELY				8				

Load Combinations

	Description	Sol...	PD...	SR...	BLC	Factor	BLC	Factor	BLC	Factor	BLC	Factor	BLC	Factor	BLC	Factor	BLC	Factor	BLC	Factor
1	DL + LL	Yes			DL	1	LL	1												
2	DL+LL+OL4	Yes			DL	1	LL	1	OL4	1										
3	DL+LL+OL5	Yes			DL	1	LL	1	OL5	1										
4	DL+OL+WLX	Yes			L22	1	WLX	1												
5	DL+OL-WLX	Yes			L22	1	WLX	-1												
6	DL+OL+WLZ	Yes			L22	1	WLZ	1												
7	DL+OL-WLZ	Yes			L22	1	WLZ	-1												
8	DL+OL+0.7(ELX+ELY)	Yes			L22	1	L23	1												
9	DL+OL-0.7(ELX+ELY)	Yes			L22	1	L23	-1												
10	DL+OL+0.7(ELZ+ELY)	Yes			L22	1	L24	1												
11	DL+OL-0.7(ELZ+ELY)	Yes			L22	1	L24	-1												
12	DL+0.75LL+OL+0.75WLX	Yes			L22	1	LL	.75	WLX	.75										
13	DL+0.75LL+OL-0.75WLX	Yes			L22	1	LL	.75	WLX	-.75										
14	DL+0.75LL+OL+0.75WLZ	Yes			L22	1	LL	.75	WLZ	.75										
15	DL+0.75LL+OL-0.75WLZ	Yes			L22	1	LL	.75	WLZ	-.75										
16	DL+0.75LL+OL+0.75(0.7EL...	Yes			L22	1	LL	.75	L23	.75										
17	DL+0.75LL+OL-0.75(0.7EL...	Yes			L22	1	LL	.75	L23	-.75										
18	DL+0.75LL+OL+0.75(0.7EL...	Yes			L22	1	LL	.75	L24	.75										
19	DL+0.75LL+OL-0.75(0.7EL...	Yes			L22	1	LL	.75	L24	-.75										
20	4:1 Equivalent	Yes			L2	1	2	1.4	3	1.4	8	1.4								
21	Selfweight (COG ONLY)				Y	-1														
22	DL+OL				DL	1	OL4	1												
23	0.7(ELX+ELY)				ELX	.7	ELY	.7												
24	0.7(ELZ+ELY)				ELZ	.7	ELY	.7												

Load Combination Design

	Description	ASIF	CD	ABIF	Service	Hot Rolled	Cold Form...	Wood	Concrete	Footings
1	DL + LL					Yes	Yes	Yes	Yes	Yes
2	DL+LL+OL4					Yes	Yes	Yes	Yes	Yes
3	DL+LL+OL5					Yes	Yes	Yes	Yes	Yes
4	DL+OL+WLX					Yes	Yes	Yes	Yes	Yes
5	DL+OL-WLX	1.33				Yes	Yes	Yes	Yes	Yes
6	DL+OL+WLZ	1.33				Yes	Yes	Yes	Yes	Yes
7	DL+OL-WLZ	1.33				Yes	Yes	Yes	Yes	Yes
8	DL+OL+0.7(ELX+ELY)	1.33				Yes	Yes	Yes	Yes	Yes
9	DL+OL-0.7(ELX+ELY)	1.33				Yes	Yes	Yes	Yes	Yes
10	DL+OL+0.7(ELZ+ELY)	1.33				Yes	Yes	Yes	Yes	Yes
11	DL+OL-0.7(ELZ+ELY)	1.33				Yes	Yes	Yes	Yes	Yes
12	DL+0.75LL+OL+0.75WLX	1.33				Yes	Yes	Yes	Yes	Yes
13	DL+0.75LL+OL-0.75WLX	1.33				Yes	Yes	Yes	Yes	Yes
14	DL+0.75LL+OL+0.75WLZ	1.33				Yes	Yes	Yes	Yes	Yes
15	DL+0.75LL+OL-0.75WLZ					Yes	Yes	Yes	Yes	Yes
16	DL+0.75LL+OL+0.75(0.7ELX+0.7...					Yes	Yes	Yes	Yes	Yes
17	DL+0.75LL+OL-0.75(0.7ELX+0.7...					Yes	Yes	Yes	Yes	Yes
18	DL+0.75LL+OL+0.75(0.7ELZ+0.7...					Yes	Yes	Yes	Yes	Yes
19	DL+0.75LL+OL-0.75(0.7ELZ+0.7...					Yes	Yes	Yes	Yes	Yes
20	4:1 Equivalent					Yes	Yes	Yes	Yes	Yes
21	Selfweight (COG ONLY)					Yes	Yes	Yes	Yes	Yes

Company : Precision Surveillance Corp
Designer : Brian Giometti
Job Number : CR-N1013-103 CR3 - BT3-120 & BT4-180 USF Design Checked By: CEC

Load Combination Design (Continued)

	Description	ASIF	CD	ABIF	Service	Hot Rolled	Cold Form...	Wood	Concrete	Footings
22	DL+OL					Yes	Yes	Yes	Yes	Yes
23	0.7(ELX+ELY)					Yes	Yes	Yes	Yes	Yes
24	0.7(ELZ+ELY)					Yes	Yes	Yes	Yes	Yes

Envelope Joint Displacements

	Joint		X [in]	lc	Y [in]	lc	Z [in]	lc	X Rotation ...	lc	Y Rotation ...	lc	Z Rotation [...	lc
1	N1	max	.179	8	.009	8	.119	10	1.198e-2	7	1.495e-3	10	1.463e-4	9
2		min	-.182	9	-.036	9	-.115	11	-1.153e-2	6	-1.373e-3	11	-2.709e-4	8
3	N2	max	.179	8	.009	8	.115	10	1.632e-3	4	1.377e-3	10	1.45e-4	9
4		min	-.183	9	-.036	9	-.119	11	-1.262e-3	5	-1.487e-3	11	-2.721e-4	8
5	N3	max	.174	8	-.01	1	.078	6	3.982e-4	7	1.236e-3	7	-3.322e-4	1
6		min	-.188	9	-.023	20	-.071	7	-1.123e-4	6	-1.226e-3	6	-1.446e-3	20
7	N4	max	.173	8	-.01	1	.071	6	9.816e-4	10	1.514e-3	7	-3.292e-4	1
8		min	-.189	9	-.023	20	-.074	7	-8.53e-4	11	-1.492e-3	6	-1.452e-3	20
9	N5	max	.179	8	.012	8	.129	10	1.625e-3	4	1.484e-3	10	1.399e-4	9
10		min	-.183	9	-.036	9	-.134	11	-1.257e-3	5	-1.594e-3	11	-2.809e-4	8
11	N6	max	.169	8	-.159	1	.648	6	2.664e-4	20	3.742e-3	7	-8.903e-4	1
12		min	-.193	9	-.493	20	-.648	7	-1.53e-4	5	-3.739e-3	6	-2.746e-3	20
13	N7	max	.241	8	-.012	1	.068	6	8.131e-4	6	1.563e-3	7	0	1
14		min	-.153	9	-.03	20	-.094	7	-7.159e-4	7	-1.463e-3	6	0	1
15	N8	max	.177	8	-.299	20	.079	10	-5.133e-3	10	4.046e-4	10	7.532e-4	9
16		min	-.185	9	-.335	9	-.08	11	-5.182e-3	11	-3.797e-4	11	3.614e-4	8
17	N9	max	.176	8	-.299	20	.079	10	5.182e-3	10	3.818e-4	10	8.7e-4	6
18		min	-.185	9	-.335	9	-.08	11	5.133e-3	11	-4.053e-4	11	1.887e-4	7
19	N10	max	.174	8	-.019	1	.074	6	-1.103e-4	6	1.29e-3	5	-3.317e-4	1
20		min	-.187	9	-.032	20	-.075	7	-2.144e-4	7	-1.296e-3	4	-1.431e-3	20
21	N11	max	.175	8	.009	20	.06	10	7.293e-4	10	8.516e-4	7	1.978e-4	9
22		min	-.187	9	-.014	9	-.06	11	-6.068e-4	11	-7.593e-4	6	-3.07e-4	20
23	N12	max	.174	8	-.018	6	.078	6	2.091e-4	7	1.291e-3	4	-3.242e-4	1
24		min	-.188	9	-.032	20	-.073	7	1.161e-4	6	-1.282e-3	5	-1.42e-3	20
25	N13	max	.176	8	.009	20	.059	10	4.64e-3	7	8.203e-4	7	1.97e-4	9
26		min	-.186	9	-.013	9	-.06	11	-4.199e-3	6	-8.711e-4	6	-3.066e-4	20
27	N14	max	.172	8	-.04	1	.156	6	4.879e-4	20	2.686e-3	7	-7.44e-4	1
28		min	-.19	9	-.127	20	-.157	7	-4.995e-4	11	-2.741e-3	6	-2.409e-3	20
29	N15	max	.173	8	-.04	1	.149	6	2.555e-4	7	2.533e-3	7	-7.447e-4	1
30		min	-.189	9	-.127	20	-.146	7	-6.054e-5	20	-2.443e-3	6	-2.408e-3	20
31	N16	max	.173	8	-.032	1	.126	6	2.889e-4	7	1.924e-3	7	-6.834e-4	1
32		min	-.189	9	-.1	20	-.122	7	-3.646e-5	14	-1.82e-3	6	-2.269e-3	20
33	N17	max	.172	8	-.032	1	.13	6	5.991e-4	10	2.067e-3	7	-6.822e-4	1
34		min	-.189	9	-.1	20	-.131	7	-5.823e-4	11	-2.135e-3	6	-2.272e-3	20
35	N18	max	.17	8	-.15	1	.754	6	3.487e-4	7	6.469e-3	7	-8.942e-4	1
36		min	-.192	9	-.464	20	-.755	7	-2.6e-4	20	-6.445e-3	6	-2.765e-3	20
37	N19	max	.169	8	-.15	1	.607	6	2.663e-4	20	3.742e-3	7	-8.963e-4	1
38		min	-.192	9	-.464	20	-.607	7	-1.458e-4	5	-3.739e-3	6	-2.762e-3	20
39	N20	max	.18	8	.012	8	.134	10	1.194e-2	7	1.603e-3	10	1.413e-4	9
40		min	-.182	9	-.036	9	-.129	11	-1.149e-2	6	-1.48e-3	11	-2.796e-4	8
41	N21	max	.17	8	-.159	1	.825	6	3.914e-4	7	6.473e-3	7	-8.882e-4	1
42		min	-.192	9	-.493	20	-.826	7	-2.594e-4	20	-6.449e-3	6	-2.749e-3	20
43	N22	max	.241	8	-.012	1	.088	6	4.617e-3	7	2.854e-3	7	0	1
44		min	-.153	9	-.03	20	-.058	7	-4.267e-3	6	-2.816e-3	6	0	1
45	N23	max	.171	8	-.091	1	.369	6	1.233e-4	11	4.927e-3	7	-9.09e-4	1
46		min	-.19	9	-.282	20	-.369	7	-2.637e-4	20	-4.903e-3	6	-2.796e-3	20
47	N24	max	.172	8	-.092	1	.367	6	3.03e-4	20	3.742e-3	7	-9.102e-4	1
48		min	-.19	9	-.29	20	-.367	7	-1.199e-4	10	-3.739e-3	6	-2.795e-3	20
49	N25	max	.172	8	-.093	1	.369	6	1.229e-4	11	4.927e-3	7	-9.09e-4	1
50		min	-.189	9	-.29	20	-.369	7	-3.012e-4	20	-4.903e-3	6	-2.796e-3	20

Company : Precision Surveillance Corp
Designer : Brian Giometti
Job Number : CR-N1013-103 CR3 - BT3-120 & BT4-180 USF Design Checked By: CEC

Envelope Joint Displacements (Continued)

	Joint		X [in]	lc	Y [in]	lc	Z [in]	lc	X Rotation ...	lc	Y Rotation ...	lc	Z Rotation [...	lc
51	N26	max	.178	8	.006	20	.079	10	8.795e-3	7	7.483e-4	10	2.424e-4	9
52		min	-.184	9	-.03	9	-.08	11	-8.349e-3	6	-6.72e-4	11	-1.49e-4	8
53	N27	max	.177	8	.006	20	.079	10	1.209e-3	4	6.743e-4	10	2.415e-4	9
54		min	-.184	9	-.03	9	-.08	11	-9.398e-4	5	-7.449e-4	11	-1.496e-4	8
55	N28	max	.176	8	-.295	8	.118	10	5.18e-3	10	3.692e-4	10	1.461e-4	9
56		min	-.185	9	-.339	9	-.116	11	5.117e-3	11	-4.176e-4	11	-2.711e-4	8
57	N29	max	.177	8	-.295	8	.116	10	-5.117e-3	10	4.168e-4	10	1.452e-4	9
58		min	-.185	9	-.339	9	-.118	11	-5.18e-3	11	-3.67e-4	11	-2.719e-4	8
59	N30	max	.072	8	.015	8	.064	10	2.713e-3	6	2.743e-3	10	1.577e-3	9
60		min	-.069	9	-.047	9	-.059	11	-3.051e-3	7	-2.533e-3	11	-5.436e-4	8
61	N31	max	.072	8	-.007	10	.027	5	2.136e-4	6	2.998e-3	4	1.274e-4	8
62		min	-.079	9	-.013	20	-.027	4	1.083e-4	7	-2.995e-3	5	-5.555e-4	9
63	N32	max	.072	8	.01	8	.039	10	2.713e-3	6	2.743e-3	10	1.577e-3	9
64		min	-.069	9	-.032	9	-.036	11	-3.051e-3	7	-2.533e-3	11	-5.437e-4	8
65	N33	max	.072	8	-.005	9	0	6	2.136e-4	6	2.998e-3	4	1.275e-4	8
66		min	-.079	9	-.013	20	0	11	1.083e-4	7	-2.995e-3	5	-5.555e-4	9
67	N34	max	.072	8	.015	8	.059	10	9.963e-4	10	2.547e-3	10	1.578e-3	9
68		min	-.07	9	-.047	9	-.064	11	-9.67e-4	11	-2.734e-3	11	-5.355e-4	8
69	N35	max	.071	8	-.008	1	.027	4	-1.414e-4	7	3.005e-3	5	1.251e-4	8
70		min	-.079	9	-.013	20	-.027	5	-1.788e-4	6	-2.996e-3	4	-5.564e-4	9
71	N36	max	.072	8	.01	8	.036	10	9.963e-4	10	2.547e-3	10	1.578e-3	9
72		min	-.07	9	-.032	9	-.039	11	-9.67e-4	11	-2.734e-3	11	-5.355e-4	8
73	N37	max	.071	8	-.005	9	0	10	-1.414e-4	7	3.005e-3	5	1.251e-4	8
74		min	-.079	9	-.013	20	0	7	-1.788e-4	6	-2.996e-3	4	-5.563e-4	9
75	N38	max	.171	8	-.091	1	.367	6	2.655e-4	20	3.742e-3	7	-9.102e-4	1
76		min	-.191	9	-.282	20	-.367	7	-1.203e-4	10	-3.739e-3	6	-2.795e-3	20
77	N39	max	.074	8	0	9	0	9	5.556e-5	20	2.998e-3	4	3.434e-4	5
78		min	-.093	9	0	20	-.002	20	2.122e-5	9	-2.995e-3	5	-7.739e-4	4
79	N40	max	.074	8	0	9	.002	20	-2.122e-5	9	3.005e-3	5	3.657e-4	5
80		min	-.093	9	0	20	0	9	-5.559e-5	20	-2.996e-3	4	-7.987e-4	4
81	N41	max	.071	8	0	8	0	10	2.257e-3	6	2.015e-3	10	1.318e-3	9
82		min	-.07	9	0	9	0	11	-2.561e-3	7	-1.869e-3	11	-4.825e-4	8
83	N42	max	.071	8	0	8	0	10	8.33e-4	10	1.874e-3	10	1.319e-3	9
84		min	-.07	9	0	9	0	11	-7.871e-4	11	-2.009e-3	11	-4.765e-4	8
85	N43	max	.213	8	-.011	1	.069	6	-4.574e-5	6	1.512e-3	7	-3.763e-4	1
86		min	-.168	9	-.027	20	-.086	7	-2.323e-4	7	-1.445e-3	6	-1.375e-3	20
87	N44	max	.212	8	-.011	1	.082	6	1.74e-4	6	2.101e-3	7	-3.813e-4	1
88		min	-.168	9	-.027	20	-.061	7	1.027e-4	7	-2.079e-3	6	-1.367e-3	20
89	N45	max	0	8	.001	8	.038	10	1.851e-4	10	4.881e-4	10	1.103e-3	9
90		min	0	9	-.041	9	-.037	11	1.233e-4	11	-4.742e-4	11	-4.666e-4	8
91	N46	max	0	8	-.004	8	.038	10	8.7e-5	10	8.933e-4	9	8.016e-4	9
92		min	0	9	-.047	9	-.037	11	2.78e-5	11	-8.413e-4	8	-4.171e-4	8
93	N47	max	0	8	-.004	8	.037	10	-2.823e-5	10	8.417e-4	8	8.017e-4	9
94		min	0	9	-.047	9	-.038	11	-8.692e-5	11	-8.921e-4	9	-4.159e-4	8
95	N48	max	0	8	.001	8	.037	10	-1.245e-4	10	4.751e-4	10	1.104e-3	9
96		min	0	9	-.041	9	-.038	11	-1.847e-4	11	-4.876e-4	11	-4.622e-4	8
97	N49	max	.07	8	.024	9	.021	11	1.256e-3	6	3.674e-4	7	3.622e-4	9
98		min	-.071	9	-.011	8	-.022	10	-1.483e-3	7	-3.665e-4	6	-2.3e-4	8
99	N50	max	.07	8	.024	9	.022	11	5.794e-4	9	3.818e-4	7	3.626e-4	9
100		min	-.071	9	-.011	8	-.021	10	-3.912e-4	11	-3.758e-4	6	-2.281e-4	8
101	N51	max	.069	8	.024	9	.019	6	5.273e-4	6	6.892e-4	5	-6.169e-5	10
102		min	-.072	9	-.015	8	-.019	7	-6.995e-4	7	-6.928e-4	4	-1.107e-4	20
103	N52	max	.069	8	.024	9	.019	6	5.358e-4	9	6.926e-4	4	-6.871e-5	8
104		min	-.072	9	-.015	8	-.019	7	-3.133e-4	8	-6.946e-4	5	-1.11e-4	20
105	N53	max	0	8	.015	9	.019	6	1.796e-4	11	4.954e-4	10	4.033e-4	9
106		min	0	9	-.024	8	-.019	7	1.299e-4	10	-4.67e-4	11	-1.911e-4	8
107	N54	max	0	8	.009	9	.019	6	8.308e-5	11	8.477e-4	9	7.263e-4	9

Company : Precision Surveillance Corp
Designer : Brian Giometti
Job Number : CR-N1013-103 CR3 - BT3-120 & BT4-180 USF Design Checked By: CEC

Envelope Joint Displacements (Continued)

	Joint		X [in]	lc	Y [in]	lc	Z [in]	lc	X Rotation ...	lc	Y Rotation ...	lc	Z Rotation [...	lc
108		min	0	9	-.029	8	-.019	7	3.24e-5	10	-9.e-4	8	-2.7e-4	8
109	N55	max	0	8	.009	9	.019	6	-3.22e-5	11	9.004e-4	8	7.264e-4	9
110		min	0	9	-.029	8	-.019	7	-8.25e-5	10	-8.465e-4	9	-2.726e-4	8
111	N56	max	0	8	.015	9	.019	6	-1.3e-4	11	4.677e-4	10	4.034e-4	9
112		min	0	9	-.024	8	-.019	7	-1.788e-4	10	-4.947e-4	11	-1.938e-4	8
113	N57	max	.015	8	-.003	8	.038	10	1.27e-4	10	2.459e-4	9	8.015e-4	9
114		min	-.016	9	-.045	9	-.037	11	6.684e-5	11	-2.207e-4	8	-4.175e-4	8
115	N58	max	.016	8	.011	9	.019	6	1.225e-4	11	2.237e-4	9	7.262e-4	9
116		min	-.015	9	-.028	8	-.019	7	7.214e-5	10	-2.481e-4	8	-2.691e-4	8
117	N59	max	.015	8	-.003	8	.037	10	-6.751e-5	10	2.217e-4	8	8.018e-4	9
118		min	-.016	9	-.045	9	-.038	11	-1.267e-4	11	-2.447e-4	9	-4.155e-4	8
119	N60	max	.016	8	.011	9	.019	6	-7.207e-5	11	2.492e-4	8	7.264e-4	9
120		min	-.015	9	-.028	8	-.019	7	-1.218e-4	10	-2.224e-4	9	-2.735e-4	8
121	N63	max	.011	9	-.005	8	.037	10	2.922e-5	10	4.644e-5	10	8.017e-4	9
122		min	-.01	8	-.048	9	-.037	11	-2.936e-5	11	-4.637e-5	11	-4.165e-4	8
123	N64	max	.01	9	.009	9	.019	6	2.556e-5	11	4.642e-5	10	7.263e-4	9
124		min	-.011	8	-.03	8	-.019	7	-2.516e-5	10	-4.635e-5	11	-2.713e-4	8
125	N63A	max	.041	8	-.017	8	.014	10	3.179e-4	6	6.664e-4	10	7.678e-4	9
126		min	-.04	9	-.019	9	-.013	11	1.672e-5	7	-6.385e-4	11	-3.483e-4	8
127	N64A	max	.04	8	-.017	8	.013	10	-1.222e-4	10	6.395e-4	10	7.682e-4	9
128		min	-.041	9	-.019	9	-.014	11	-2.279e-4	11	-6.655e-4	11	-3.496e-4	8

Envelope Joint Reactions

	Joint		X [k]	lc	Y [k]	lc	Z [k]	lc	MX [k-ft]	lc	MY [k-ft]	lc	MZ [k-ft]	lc
1	N33	max	0	1	0	1	5.452	11	0	1	0	1	0	1
2		min	0	1	0	1	-18.304	6	0	1	0	1	0	1
3	N37	max	0	1	0	1	15.618	7	0	1	0	1	0	1
4		min	0	1	0	1	-5.451	10	0	1	0	1	0	1
5	N39	max	0	1	72.869	20	0	1	0	1	0	1	0	1
6		min	0	1	27.861	9	0	1	0	1	0	1	0	1
7	N40	max	0	1	72.826	20	0	1	0	1	0	1	0	1
8		min	0	1	27.851	9	0	1	0	1	0	1	0	1
9	N41	max	0	1	32.997	9	10.806	11	0	1	0	1	0	1
10		min	0	1	-6.927	8	-11.78	10	0	1	0	1	0	1
11	N42	max	0	1	33.007	9	11.749	11	0	1	0	1	0	1
12		min	0	1	-6.896	8	-10.772	10	0	1	0	1	0	1
13	N45	max	14.332	9	0	1	0	1	0	1	0	1	0	1
14		min	-14.054	8	0	1	0	1	0	1	0	1	0	1
15	N46	max	14.29	9	0	1	0	1	0	1	0	1	0	1
16		min	-13.562	8	0	1	0	1	0	1	0	1	0	1
17	N47	max	14.263	9	0	1	0	1	0	1	0	1	0	1
18		min	-13.574	8	0	1	0	1	0	1	0	1	0	1
19	N48	max	14.355	9	0	1	0	1	0	1	0	1	0	1
20		min	-14.03	8	0	1	0	1	0	1	0	1	0	1
21	N53	max	14.106	9	0	1	0	1	0	1	0	1	0	1
22		min	-14.411	8	0	1	0	1	0	1	0	1	0	1
23	N54	max	13.668	9	0	1	0	1	0	1	0	1	0	1
24		min	-14.377	8	0	1	0	1	0	1	0	1	0	1
25	N55	max	13.642	9	0	1	0	1	0	1	0	1	0	1
26		min	-14.389	8	0	1	0	1	0	1	0	1	0	1
27	N56	max	14.128	9	0	1	0	1	0	1	0	1	0	1
28		min	-14.387	8	0	1	0	1	0	1	0	1	0	1
29	Totals:	max	112.784	9	140.403	20	43.4	11						
30		min	-112.784	8	87.331	8	-43.4	10						

Company : Precision Surveillance Corp
Designer : Brian Giometti
Job Number : CR-N1013-103 CR3 - BT3-120 & BT4-180 USF Design Checked By: CEC

Envelope Member Section Forces

	Member	Sec		Axial[k]	lc	y Shear[k]	lc	z Shear[k]	lc	Torque[k-ft]	lc	y-y Momen...	lc	z-z Momen...	lc
1	M1	1	max	27.52	8	16.13	20	5.425	10	.004	5	.002	5	0	1
2			min	-.582	9	5.847	9	-5.425	11	-.004	4	-.003	4	0	1
3		2	max	27.17	20	-4.614	1	0	1	.004	5	.002	4	0	1
4			min	9.975	1	-12.683	20	0	1	-.004	4	-.002	5	0	1
5	M2	1	max	29.375	20	2.296	4	0	1	.002	5	0	1	0	1
6			min	11.063	1	-2.296	5	0	1	-.003	4	0	1	0	1
7		2	max	29.06	20	2.296	5	0	1	.004	5	0	1	0	1
8			min	10.748	1	-2.296	4	0	1	-.005	4	0	1	0	1
9	M3	1	max	5.775	10	13.947	10	.147	5	0	11	0	1	0	1
10			min	-.874	4	13.947	11	-.156	4	0	10	0	1	0	1
11		2	max	5.775	10	-13.947	10	.145	4	0	11	0	1	0	1
12			min	-.874	4	-13.947	11	-.124	5	0	10	0	1	0	1
13	M4	1	max	15.551	7	.823	7	1.364	7	.004	6	0	1	0	1
14			min	-1.479	6	.261	6	-1.35	6	-.004	7	0	1	0	1
15		2	max	20.26	6	-.468	6	1.431	7	.001	7	0	1	0	1
16			min	-6.091	7	-.61	7	-1.414	6	-.002	6	0	1	0	1
17	M5	1	max	.4	4	.036	5	0	1	-.013	11	0	1	0	1
18			min	-.342	5	.036	4	0	1	-.016	10	0	1	0	1
19		2	max	.4	4	-.036	5	0	1	-.013	11	0	1	0	1
20			min	-.342	5	-.036	4	0	1	-.016	10	0	1	0	1
21	M6	1	max	.452	4	.036	4	0	1	.026	6	0	1	0	1
22			min	-.452	5	.036	5	0	1	.001	7	0	1	0	1
23		2	max	.452	4	-.036	4	0	1	.026	6	0	1	0	1
24			min	-.452	5	-.036	5	0	1	.001	7	0	1	0	1
25	M7	1	max	6.47	5	.036	7	0	1	.001	7	0	1	0	1
26			min	-5.977	4	.036	6	0	1	-.003	6	0	1	0	1
27		2	max	6.47	5	-.036	7	0	1	.001	7	0	1	0	1
28			min	-5.977	4	-.036	6	0	1	-.003	6	0	1	0	1
29	M8	1	max	6.518	5	.036	7	0	1	.015	7	0	1	0	1
30			min	-6.004	4	.036	20	0	1	-.011	6	0	1	0	1
31		2	max	6.518	5	-.036	7	0	1	.015	7	0	1	0	1
32			min	-6.004	4	-.036	20	0	1	-.011	6	0	1	0	1
33	M9	1	max	9.748	7	.036	6	0	1	.003	11	0	1	0	1
34			min	-9.19	6	.036	7	0	1	0	10	0	1	0	1
35		2	max	9.748	7	-.036	6	0	1	.003	11	0	1	0	1
36			min	-9.19	6	-.036	7	0	1	0	10	0	1	0	1
37	M10	1	max	9.806	6	.036	6	0	1	0	6	0	1	0	1
38			min	-9.223	7	.036	7	0	1	-.002	20	0	1	0	1
39		2	max	9.806	6	-.036	6	0	1	0	6	0	1	0	1
40			min	-9.223	7	-.036	7	0	1	-.002	20	0	1	0	1
41	M11	1	max	27.469	8	16.166	20	5.425	10	.021	6	.012	6	0	1
42			min	-.623	9	5.823	9	-5.425	11	-.021	7	-.013	7	0	1
43		2	max	27.114	20	-4.629	1	0	1	.021	6	.01	7	0	1
44			min	10.007	1	-12.657	20	0	1	-.021	7	-.01	6	0	1
45	M12	1	max	29.376	20	2.925	4	.351	7	.018	6	1.386	6	4.401	4
46			min	11.053	1	-2.816	5	-.34	6	-.018	7	-1.431	7	-3.638	5
47		2	max	29.069	20	1.776	5	0	1	.022	6	0	1	0	1
48			min	10.738	1	-1.667	4	0	1	-.022	7	0	1	0	1
49	M13	1	max	0	1	0	4	0	1	0	1	0	1	0	1
50			min	0	1	-3	20	0	1	0	1	0	1	0	1
51		2	max	0	1	3	20	0	1	0	1	0	1	0	1
52			min	0	1	0	4	0	1	0	1	0	1	0	1
53	M14	1	max	3.9	4	13.983	6	.154	5	-.003	7	0	1	0	1
54			min	-4.085	5	13.982	7	-.153	4	-.017	6	0	1	0	1
55		2	max	3.938	4	-13.982	6	.142	4	.011	4	0	1	0	1
56			min	-4.164	5	-13.983	7	-.131	5	.009	5	0	1	0	1

Company : Precision Surveillance Corp
Designer : Brian Giometti
Job Number : CR-N1013-103 CR3 - BT3-120 & BT4-180 USF Design Checked By: CEC

Envelope Member Section Forces (Continued)

	Member	Sec		Axial[k]	lc	y Shear[k]	lc	z Shear[k]	lc	Torque[k-ft]	lc	y-y Momen...	lc	z-z Momen...	lc
57	M15	1	max	.142	4	.018	8	0	1	0	10	0	1	0	1
58			min	-.117	5	.018	9	0	1	0	11	0	1	0	1
59		2	max	.142	4	-.018	8	0	1	0	10	0	1	0	1
60			min	-.117	5	.018	9	0	1	0	11	0	1	0	1
61	M16	1	max	.16	4	.018	8	0	1	0	10	0	1	0	1
62			min	-.155	5	.018	9	0	1	0	11	0	1	0	1
63		2	max	.16	4	-.018	8	0	1	0	10	0	1	0	1
64			min	-.155	5	-.018	9	0	1	0	11	0	1	0	1
65	M17	1	max	0	1	0	1	0	1	0	1	0	1	0	1
66			min	0	1	0	1	0	1	0	1	0	1	0	1
67		2	max	0	1	0	1	0	1	0	1	0	1	0	1
68			min	0	1	0	1	0	1	0	1	0	1	0	1
69	M18	1	max	0	1	0	1	0	1	0	1	0	1	0	1
70			min	0	1	0	1	0	1	0	1	0	1	0	1
71		2	max	0	1	0	1	0	1	0	1	0	1	0	1
72			min	0	1	0	1	0	1	0	1	0	1	0	1
73	M19	1	max	25.373	9	.628	6	3.197	8	.003	8	0	1	0	1
74			min	-25.128	8	.588	7	-3.213	9	-.018	9	0	1	0	1
75		2	max	25.368	9	-.569	7	3.201	9	.018	9	0	1	0	1
76			min	-25.123	8	-.646	6	-3.205	8	-.003	8	0	1	0	1
77	M20	1	max	0	1	.568	7	6.559	4	.002	10	18.391	5	.781	7
78			min	0	1	.491	6	-6.561	5	-.002	11	-18.378	4	-.764	6
79		2	max	0	1	-.494	7	6.559	5	.002	10	18.371	5	.214	4
80			min	0	1	-.57	6	-6.561	4	-.002	11	-18.39	4	-.15	5
81	M21	1	max	25.585	9	0	9	0	1	.027	10	0	1	0	9
82			min	-4.482	20	0	8	0	1	-.029	11	0	1	0	8
83		2	max	25.733	9	0	9	0	1	.027	10	0	1	0	8
84			min	-4.334	20	0	8	0	1	-.029	11	0	1	0	9
85	M22	1	max	70.314	20	1.218	4	0	1	.053	5	0	1	0	9
86			min	30.566	1	-1.218	5	0	1	-.052	4	0	1	0	8
87		2	max	70.462	20	1.218	5	0	1	.053	5	0	1	0	8
88			min	30.714	1	-1.218	4	0	1	-.052	4	0	1	0	9
89	M23	1	max	25.575	9	0	9	1.006	6	.029	10	0	1	0	9
90			min	-4.495	20	0	8	-1.006	7	-.027	11	0	1	0	8
91		2	max	25.723	9	0	9	1.006	7	.029	10	0	1	0	8
92			min	-4.347	20	0	8	-1.006	6	-.027	11	0	1	0	9
93	M24	1	max	70.325	20	1.218	4	1.006	6	.052	4	0	1	0	9
94			min	30.571	1	-1.218	5	-1.006	7	-.053	5	0	1	0	8
95		2	max	70.473	20	1.218	5	1.006	7	.052	4	0	1	0	8
96			min	30.719	1	-1.218	4	-1.006	6	-.053	5	0	1	0	9
97	M25	1	max	-11.536	1	.048	9	0	1	.024	7	0	1	0	1
98			min	-31.666	20	.048	2	0	1	-.024	6	0	1	0	1
99		2	max	-11.593	1	-.048	9	0	1	.024	7	0	1	0	1
100			min	-31.723	20	-.048	2	0	1	-.024	6	0	1	0	1
101	M26	1	max	-11.082	1	.061	1	0	1	.023	7	0	1	0	1
102			min	-29.98	20	.061	16	0	1	-.023	6	0	1	0	1
103		2	max	-11.025	1	-.061	1	0	1	.023	7	0	1	0	1
104			min	-29.923	20	-.061	16	0	1	-.023	6	0	1	0	1
105	M27	1	max	-11.583	1	.048	9	0	1	.005	4	0	1	0	1
106			min	-31.597	20	.048	8	0	1	-.004	5	0	1	0	1
107		2	max	-11.64	1	-.048	9	0	1	.005	4	0	1	0	1
108			min	-31.654	20	-.048	8	0	1	-.004	5	0	1	0	1
109	M28	1	max	-11.048	1	.061	3	0	1	.005	4	0	1	0	1
110			min	-30.042	20	.061	16	0	1	-.004	5	0	1	0	1
111		2	max	-10.991	1	-.061	3	0	1	.005	4	0	1	0	1
112			min	-29.984	20	-.061	16	0	1	-.004	5	0	1	0	1
113	M29	1	max	.01	20	.049	20	0	1	0	8	0	1	0	1

Company : Precision Surveillance Corp
Designer : Brian Giometti
Job Number : CR-N1013-103 CR3 - BT3-120 & BT4-180 USF Design Checked By: CEC

Envelope Member Section Forces (Continued)

	Member	Sec		Axial[k]	lc	y Shear[k]	lc	z Shear[k]	lc	Torque[k-ft]	lc	y-y Momen...	lc	z-z Momen...	lc
114			min	-12.066	11	0	1	0	1	0	11	0	1	0	1
115		2	max	0	1	0	1	0	1	0	8	0	1	0	1
116			min	-12.092	11	-.049	11	0	1	0	11	0	1	0	1
117	M30	1	max	.846	7	.049	1	0	1	0	17	0	1	0	1
118			min	-12.055	10	0	9	0	1	0	8	0	1	0	1
119		2	max	.821	7	0	9	0	1	0	17	0	1	0	1
120			min	-12.08	10	-.049	10	0	1	0	8	0	1	0	1
121	M31	1	max	72.738	20	0	1	0	1	0	1	0	1	0	1
122			min	27.763	9	0	1	0	1	0	1	0	1	0	1
123		2	max	72.777	20	0	1	0	1	0	1	0	1	0	1
124			min	27.801	9	0	1	0	1	0	1	0	1	0	1
125	M32	1	max	72.781	20	0	1	0	1	0	1	0	1	0	1
126			min	27.772	9	0	1	0	1	0	1	0	1	0	1
127		2	max	72.82	20	0	1	0	1	0	1	0	1	0	1
128			min	27.811	9	0	1	0	1	0	1	0	1	0	1
129	M33	1	max	-.006	5	.049	1	0	1	0	1	0	1	0	1
130			min	-.006	20	.049	2	0	1	0	1	0	1	0	1
131		2	max	.006	5	-.049	1	0	1	0	1	0	1	0	1
132			min	.006	20	-.049	2	0	1	0	1	0	1	0	1
133	M34	1	max	-.006	4	.049	1	0	1	0	1	0	1	0	1
134			min	-.006	15	.049	11	0	1	0	1	0	1	0	1
135		2	max	.006	4	-.049	1	0	1	0	1	0	1	0	1
136			min	.006	15	-.049	11	0	1	0	1	0	1	0	1
137	M35	1	max	7.175	4	.052	5	.054	4	0	7	.019	5	.154	5
138			min	-31.166	9	0	8	-.044	5	0	6	-.093	4	-.134	4
139		2	max	7.209	4	0	8	.054	4	0	7	.088	4	.616	4
140			min	-31.132	9	-.069	4	-.044	5	0	6	-.222	5	-.361	5
141	M36	1	max	8.328	5	.067	20	.05	11	0	6	0	9	.306	10
142			min	-31.158	8	0	9	-.046	10	0	11	-.144	20	-.103	11
143		2	max	8.362	5	0	9	.05	11	0	6	.051	11	.592	11
144			min	-31.124	8	-.067	11	-.046	10	0	11	-.171	10	-.33	10
145	M37	1	max	7.164	4	.093	7	.109	6	.003	7	.234	7	1.058	7
146			min	-31.142	9	-.033	6	-.106	7	-.003	6	-.297	6	-.998	6
147		2	max	7.198	4	.02	7	.109	6	.003	7	.049	5	.698	5
148			min	-31.108	9	-.106	6	-.106	7	-.003	6	-.199	4	-.506	4
149	M38	1	max	8.351	5	.079	10	.056	11	0	6	0	9	.426	10
150			min	-31.187	8	-.002	11	-.061	10	-.001	7	-.135	20	-.189	11
151		2	max	8.386	5	.006	10	.056	11	0	6	.022	11	.62	11
152			min	-31.153	8	-.075	11	-.061	10	-.001	7	-.168	10	-.459	10
153	M39	1	max	0	1	.066	7	0	1	0	1	0	1	0	1
154			min	-15.227	7	0	1	0	1	0	15	0	1	0	1
155		2	max	0	1	0	1	0	1	0	1	0	1	0	1
156			min	-15.261	7	-.066	11	0	1	0	15	0	1	0	1
157	M40	1	max	.068	20	.066	10	0	1	0	4	0	1	0	1
158			min	-15.31	6	0	7	0	1	0	5	0	1	0	1
159		2	max	.034	20	0	7	0	1	0	4	0	1	0	1
160			min	-15.344	6	-.066	6	0	1	0	5	0	1	0	1
161	M41	1	max	-.026	11	.026	7	0	1	.002	6	0	1	0	1
162			min	-.026	7	.026	9	0	1	-.002	7	0	1	0	1
163		2	max	.026	11	-.026	7	0	1	.002	6	0	1	0	1
164			min	.026	7	-.026	9	0	1	-.002	7	0	1	0	1
165	M42	1	max	.475	7	.026	7	0	1	.005	6	0	1	0	1
166			min	-.511	6	.026	11	0	1	-.006	7	0	1	0	1
167		2	max	.527	7	-.026	7	0	1	.005	6	0	1	0	1
168			min	-.459	6	-.026	11	0	1	-.006	7	0	1	0	1
169	M43	1	max	37.648	9	.132	6	.014	8	.004	8	0	1	0	1
170			min	-36.149	8	.019	7	-.026	9	-.024	9	0	1	0	1

Company : Precision Surveillance Corp
Designer : Brian Giometti
Job Number : CR-N1013-103 CR3 - BT3-120 & BT4-180 USF Design Checked By: CEC

Envelope Member Section Forces (Continued)

	Member	Sec		Axial[k]	lc	y Shear[k]	lc	z Shear[k]	lc	Torque[k-ft]	lc	y-y Momen...	lc	z-z Momen...	lc
171		2	max	37.616	9	-.015	6	.031	9	.105	7	0	1	0	1
172			min	-36.091	8	-.142	7	-.013	4	-.137	6	0	1	0	1
173	M44	1	max	37.608	9	.102	10	.013	4	.071	11	0	1	0	1
174			min	-36.083	8	.048	11	-.031	9	-.031	8	0	1	0	1
175		2	max	37.64	9	-.065	10	.026	9	.024	9	0	1	0	1
176			min	-36.141	8	-.093	11	-.014	8	-.004	8	0	1	0	1
177	M45	1	max	26.686	8	.612	11	3.207	8	.019	9	0	1	0	1
178			min	-27.792	9	.605	8	-3.222	9	-.005	8	0	1	0	1
179		2	max	26.68	8	-.601	7	3.21	9	.005	8	0	1	0	1
180			min	-27.787	9	-.616	6	-3.216	8	-.019	9	0	1	0	1
181	M46	1	max	37.882	8	.089	6	.026	8	.026	9	0	1	0	1
182			min	-36.369	9	.065	7	-.016	9	-.006	8	0	1	0	1
183		2	max	37.852	8	-.071	6	.011	9	.549	6	0	1	0	1
184			min	-36.31	9	-.081	7	-.029	8	-.551	7	0	1	0	1
185	M47	1	max	37.873	8	.088	11	.016	9	.007	8	0	1	0	1
186			min	-36.36	9	.068	10	-.026	8	-.026	9	0	1	0	1
187		2	max	37.843	8	-.072	10	.029	8	.163	10	0	1	0	1
188			min	-36.302	9	-.079	8	-.011	9	-.22	11	0	1	0	1

Envelope AISC ASD Steel Code Checks

	Member	Shape	Code C...	Loc[ft]	lc	Shear ...	Loc[ft]	Dir	lc	Fa [ksi]	Ft [ksi]	Fb y...	Fb z-z [...	Cb	Cmy	Cmz	ASD Eqn
1	M1	W21X73	.479	11.852	20	.178	11.852	y	20	19.417	21.6	27	23.76	1	.6	.85	H1-2
2	M2	W8X40	.131	0	20	.056	7	y	4	19.109	21.6	27	23.76	1	.6	.6	H1-1
3	M3	W14X43	.777	8.081	19	.233	20	y	19	9.3	21.6	27	21.6	1	.6	1	H1-3
4	M4	W14X43	.261	10.101	4	.032	4.04	z	4	17.103	21.6	27	21.6	1	1	1	H2-1
5	M5	L4X4X8	.007	0	4	.022	5.598	y	4	14.684	21.6	- Co..					H1-1
6	M6	L4X4X8	.008	0	4	.027	5.598	y	6	14.684	21.6	- Co..					H1-1
7	M7	L4X4X8	.090	0	5	.005	0	y	19	19.251	28.728	- Co..					H1-1
8	M8	L4X4X8	.090	0	5	.017	0	y	15	19.251	28.728	- Co..					H1-1
9	M9	L4X4X8	.134	0	15	.004	0	y	19	14.684	21.6	- Co..					H1-1
10	M10	L4X4X8	.134	0	6	.005	0	y	20	19.53	28.728	- Co..					H1-1
11	M11	W21X73	.483	11.852	20	.178	11.852	y	20	19.417	21.6	27	23.76	1	.6	.85	H1-2
12	M12	W8X40	.139	0	20	.070	0	y	4	19.109	21.6	27	23.76	1	.6	.6	H1-1
13	M13	S18X54.7	.281	2.182	15	.026	1.939	y	20	9.304	21.6	27	9.599	1	.6	.85	H1-3
14	M14	W14X43	.792	9.697	4	.238	20	y	4	9.3	21.6	27	21.6	1	.6	1	H1-1
15	M15	W6X12	.003	1.515	4	.001	0	y	18	19.251	21.6	27	23.76	1	.6	1	H1-3
16	M16	W6X12	.003	1.485	4	.001	0	y	19	19.251	21.6	27	23.76	1	.6	1	H1-3
17	M17	W14X43	.763	11.742	4	.376	1.894	y	17	15.444	21.6	27	21.6	1	.6	.85	H2-1
18	M18	W14X43	.758	11.742	4	.375	1.894	y	17	15.444	21.6	27	21.6	1	.6	.85	H2-1
19	M19	W14X53	.554	13.333	17	.070	12.121	z	9	9.585	21.6	27	19.108	1	.6	1	H1-1
20	M20	W14X53	.573	20	4	.043	20	z	4	17.197	21.6	27	19.108	1	.85	.85	H1-2
21	M21	W8X40	.083	3.713	17	.009	0	z	19	20.491	21.6	27	23.76	1	.6	.6	H1-1
22	M22	W8X40	.294	3.713	20	.050	3.713	y	4	20.491	21.6	27	23.76	1	.6	.6	H1-1
23	M23	W8X40	.084	3.713	17	.009	0	z	18	20.491	21.6	27	23.76	1	.6	.6	H1-1
24	M24	W8X40	.294	3.713	20	.050	3.713	y	4	20.491	21.6	27	23.76	1	.6	.6	H1-1
25	M25	1.75 rod	.611	13.677	20	.017	13.677		15	1.061	21.6	27	27	1	.6	1	H2-1
26	M26	1.75 rod	.577	0	20	.016	16.477		15	.731	21.6	27	27	1	.6	1	H2-1
27	M27	1.75 rod	.609	13.677	20	.006	13.677		4	1.061	21.6	27	27	1	.6	1	H2-1
28	M28	1.75 rod	.578	0	20	.006	16.477		4	.731	21.6	27	27	1	.6	1	H2-1
29	M29	L3X3X4	.292	20.657	11	.006	20.657	y	19	1.133	28.728	- Co..					H2-1
30	M30	L3X3X4	.292	20.657	10	.006	20.657	y	17	1.133	28.728	- Co..					H2-1
31	M31	TU4X4X6	.693	2.25	20	.000	0	z	1	20.683	21.6	23.76	23.76	1...	.6	.6	H1-1
32	M32	TU4X4X6	.693	2.25	20	.000	0	z	1	20.683	21.6	23.76	23.76	1...	.6	.6	H1-1
33	M33	L3X3X4	.000	0	20	.005	0	y	1	.897	21.6	- Co..					H2-1
34	M34	L3X3X4	.000	0	15	.005	0	y	1	.897	21.6	- Co..					H2-1
35	M35	L4X4X4	.559	0	9	.006	12.153	y	4	5.902	28.728	- Co..					H2-1

Company : Precision Surveillance Corp
Designer : Brian Giometti
Job Number : CR-N1013-103 CR3 - BT3-120 & BT4-180 USF Design Checked By: CEC

Envelope AISC ASD Steel Code Checks (Continued)

	Member	Shape	Code C...	Loc[ft]	lc	Shear ...	Loc[ft]	Dir	lc	Fa [ksi]	Ft [ksi]	Fb y...	Fb z-z [...	Cb	Cmy	Cmz	ASD Eqn
36	M36	L4X4X4	.559	0	8	.006	0	y	20	5.902	28.728	- Co...					H2-1
37	M37	L4X4X4	.559	0	17	.017	0	z	6	4.438	21.6	- Co...					H2-1
38	M38	L4X4X4	.560	0	8	.008	0	y	15	5.902	28.728	- Co...					H2-1
39	M39	L4X4X4	.274	20.657	7	.006	20.657	y	15	2.043	28.728	- Co...					H2-1
40	M40	L4X4X4	.275	20.657	6	.007	20.657	y	4	2.043	28.728	- Co...					H2-1
41	M41	L4X4X8	.000	5.716	18	.004	0	y	4	14.475	21.6	- Co...					H1-1
42	M42	L4X4X8	.007	5.716	15	.007	0	y	15	14.475	21.6	- Co...					H1-1
43	M43	TU4X4X6	.374	4.485	17	.010	4.485	y	6	16.07	21.6	23.76	23.76	1	.6	1	H1-1
44	M44	TU4X4X6	.373	4.396	17	.006	0	y	19	16.07	21.6	23.76	23.76	1	.6	1	H1-1
45	M45	W14X53	.566	6.667	16	.071	6.667	z	8	9.585	21.6	27	19.108	1	.6	1	H1-1
46	M46	TU4X4X6	.376	4.485	16	.037	8.881	y	15	16.07	21.6	23.76	23.76	1	.6	1	H1-1
47	M47	TU4X4X6	.376	4.485	16	.016	8.881	y	19	16.07	21.6	23.76	23.76	1	.6	1	H1-1

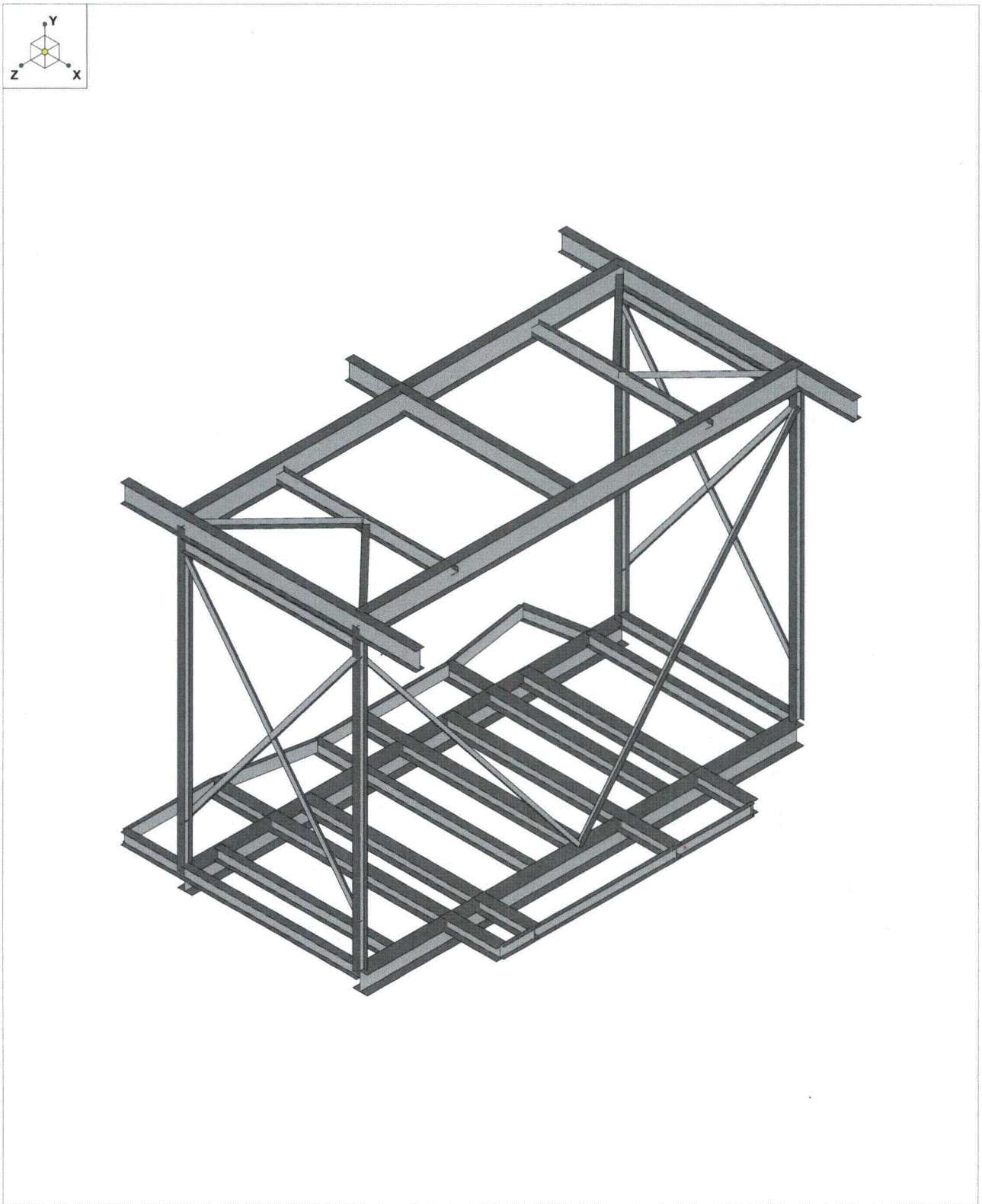

Precision Surveillance Corp	CR3 - BT3-120 Work Platform Design	
Brian Giometti		
CR-N1013-104		CR-N1013-104 BT3-120 WORK P...

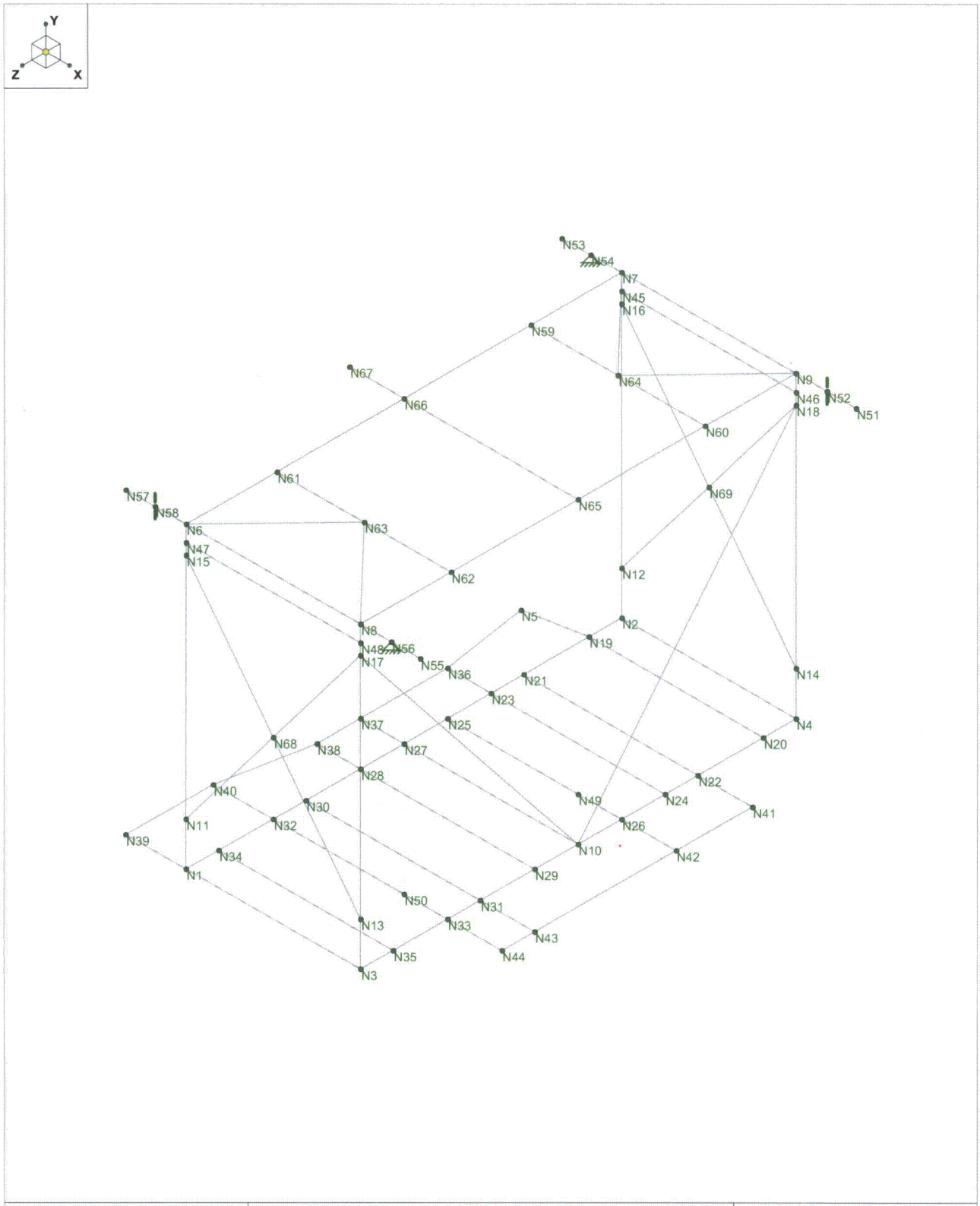

Precision Surveillance Corp	CR3 - BT3-120 Work Platform Design	
Brian Giometti		
CR-N1013-104		CR-N1013-104 BT3-120 WORK P...

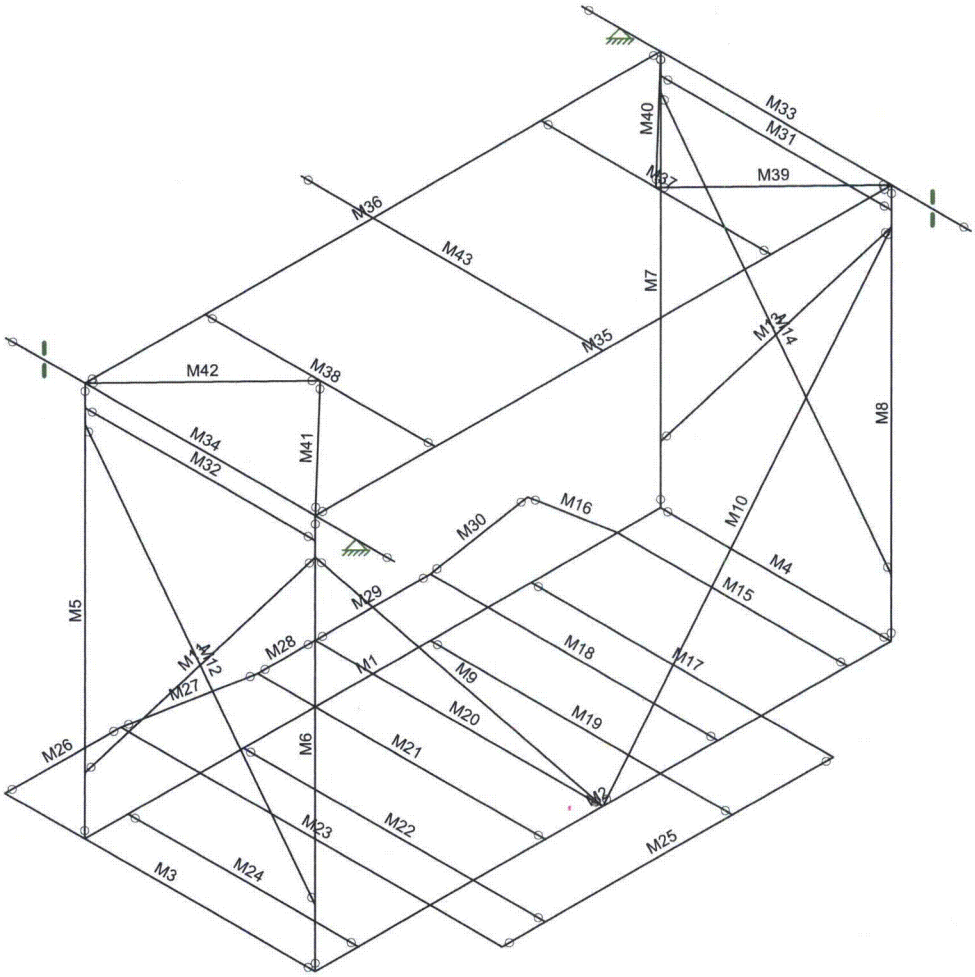

Precision Surveillance Corp	CR3 - BT3-120 Work Platform Design	
Brian Giometti		
CR-N1013-104		CR-N1013-104 BT3-120 WORK P...

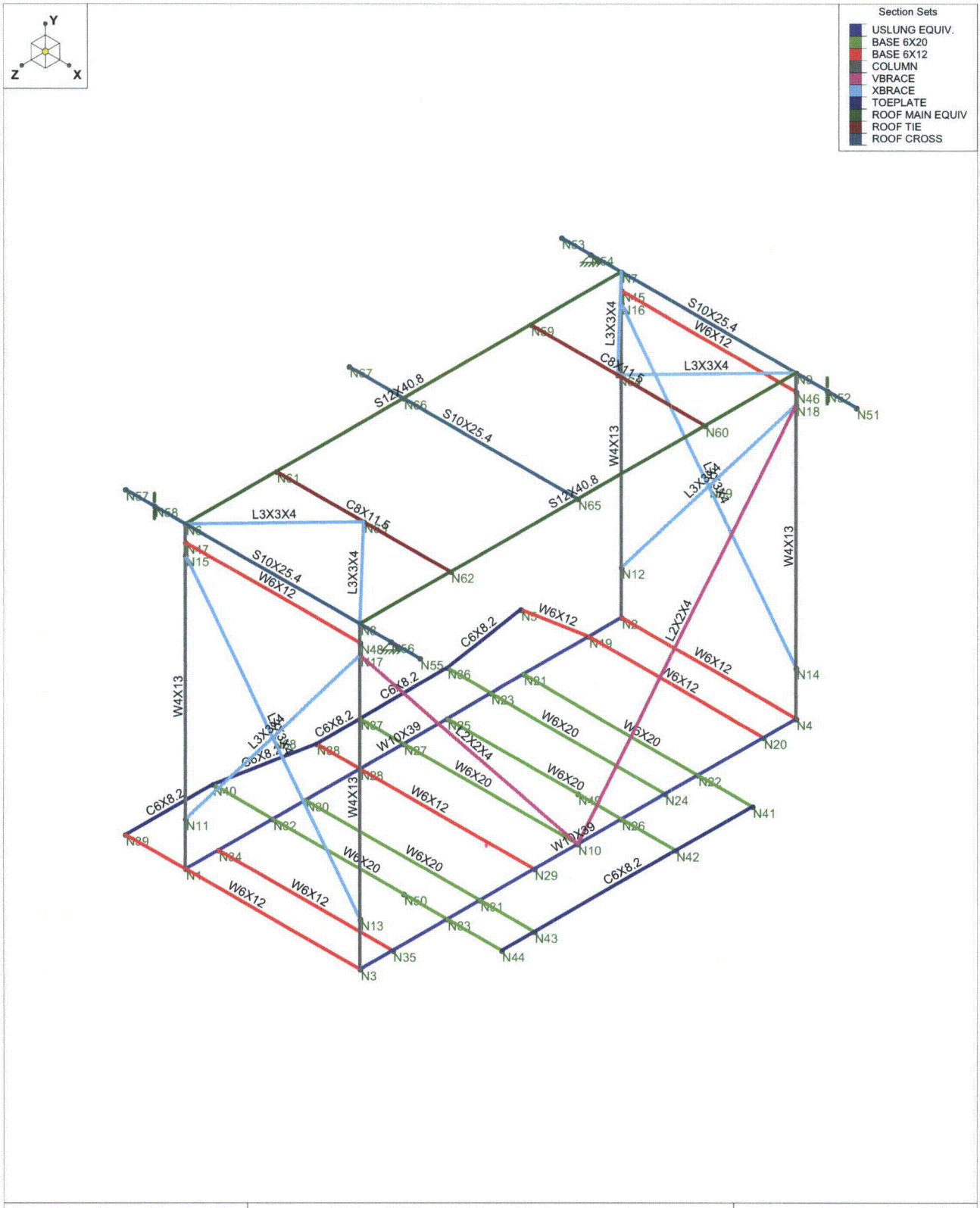

Precision Surveillance Corp	CR3 - BT3-120 Work Platform Design	
Brian Giometti		
CR-N1013-104		CR-N1013-104 BT3-120 WORK P...

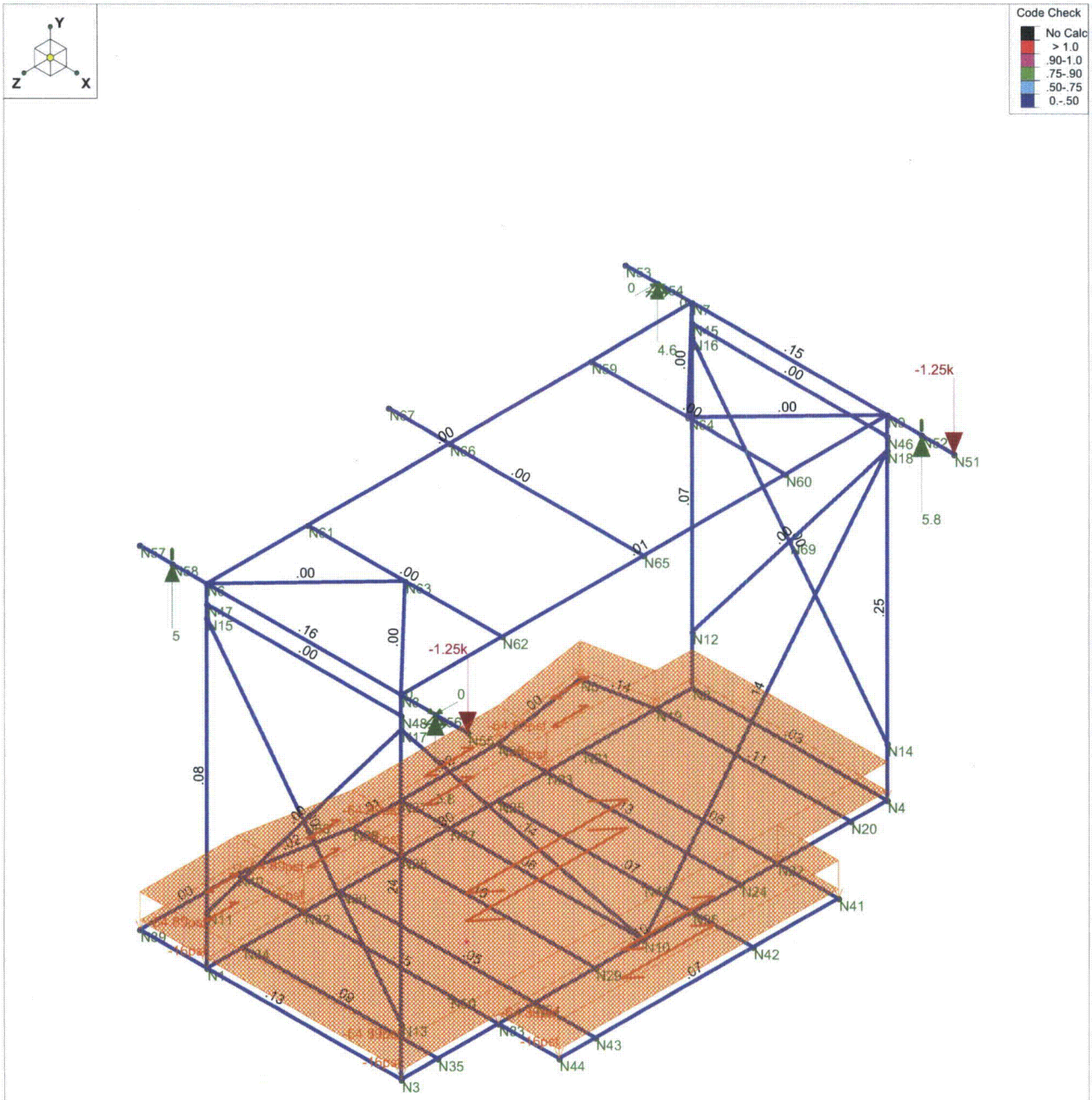

Member Code Checks Displayed
Loads: LC 1, DL+LL
Results for LC 1, DL+LL
Reaction units are k and k-ft

Precision Surveillance Corp	CR3 - BT3-120 Work Platform Design	
Brian Giometti		
CR-N1013-104		CR-N1013-104 BT3-120 WORK P...

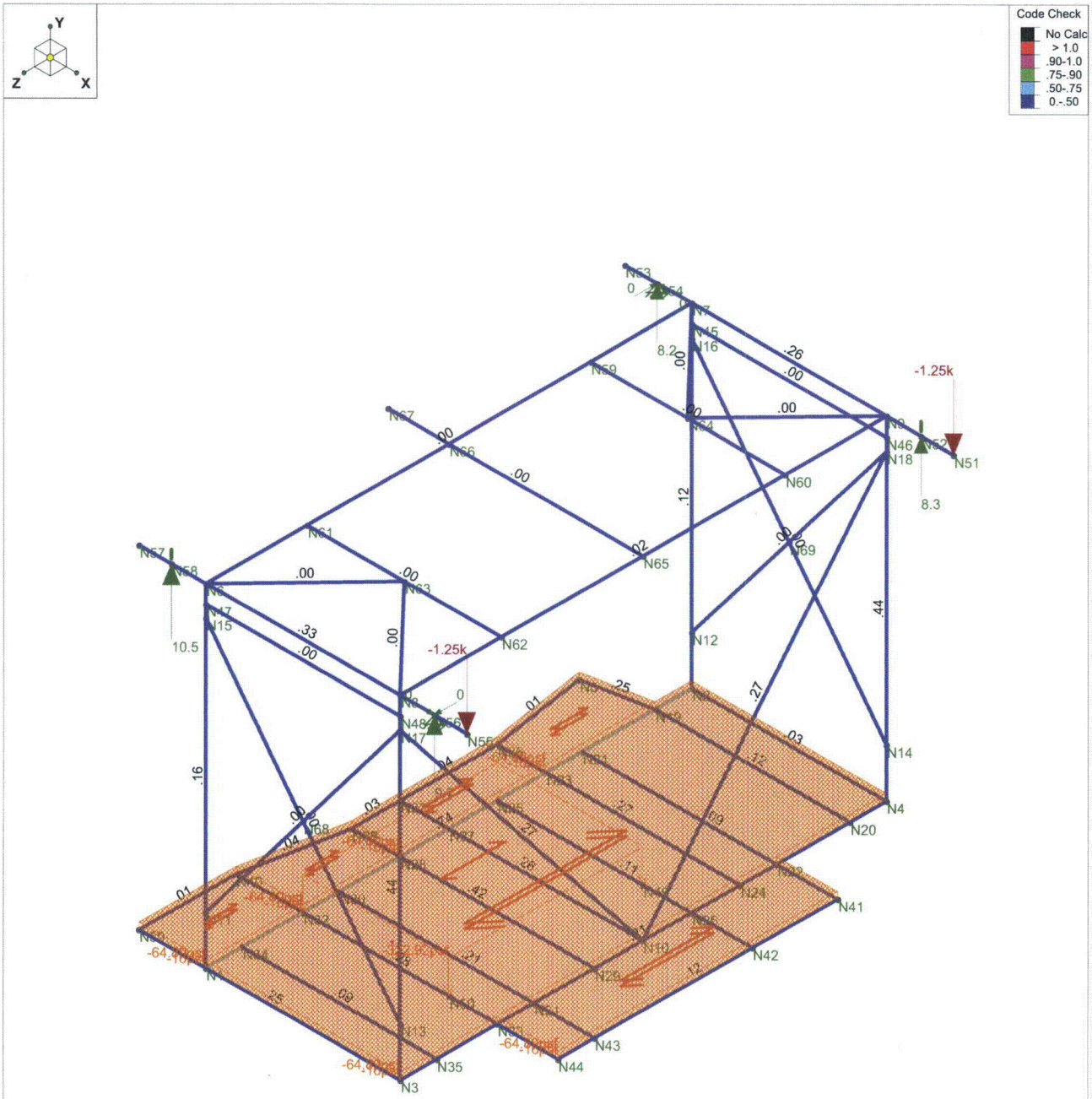

Member Code Checks Displayed
Loads: LC 2, DL+LL+COILER SETUP
Results for LC 2, DL+LL+COILER SETUP
Reaction units are k and k-ft

Precision Surveillance Corp	CR3 - BT3-120 Work Platform Design	
Brian Giometti		
CR-N1013-104		CR-N1013-104 BT3-120 WORK P...

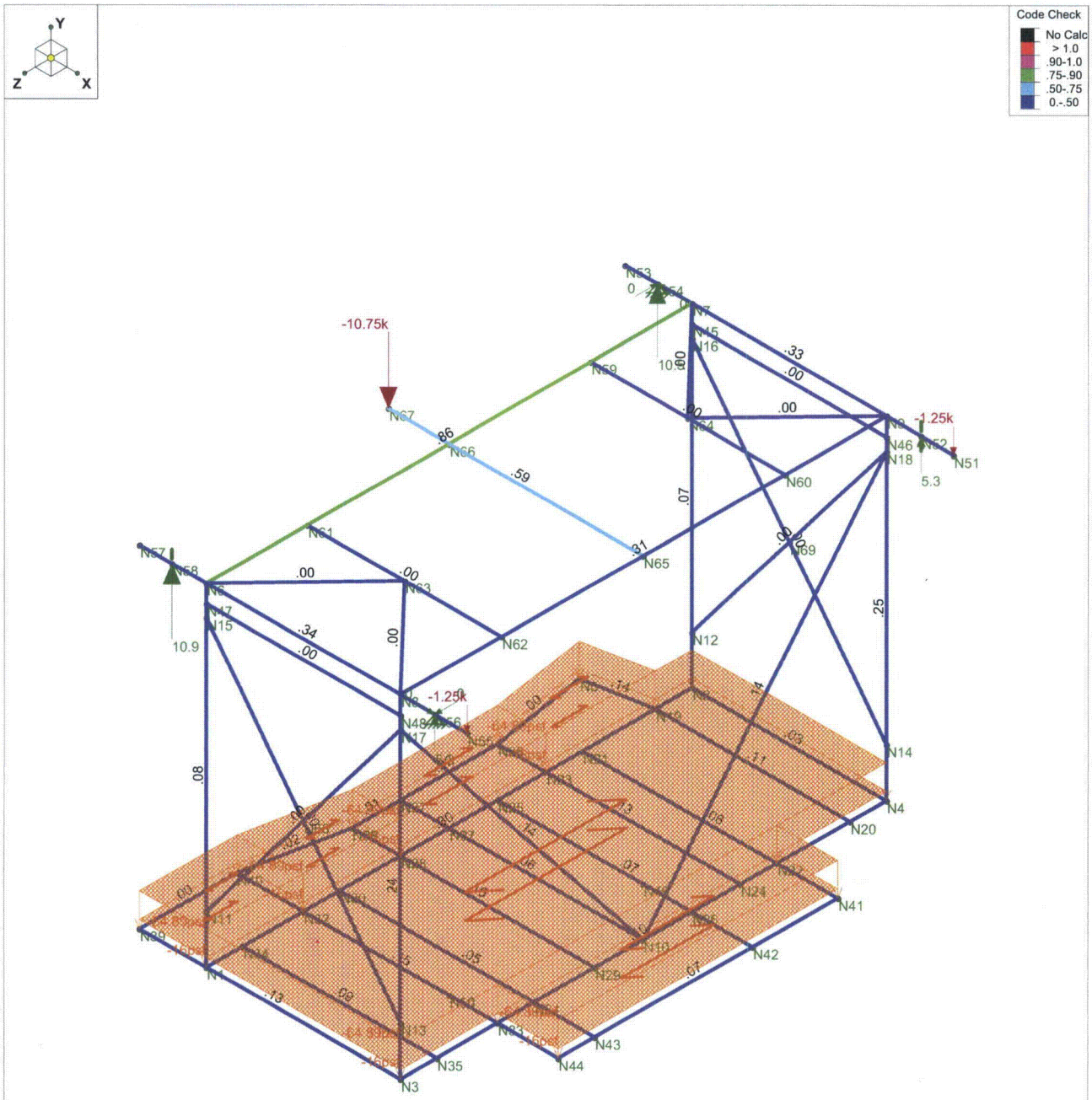

Member Code Checks Displayed
Loads: LC 3, DL+LL+RAM LOCATION #1
Results for LC 3, DL+LL+RAM LOCATION #1
Reaction units are k and k-ft

Precision Surveillance Corp	CR3 - BT3-120 Work Platform Design	
Brian Giometti		
CR-N1013-104		CR-N1013-104 BT3-120 WORK P...

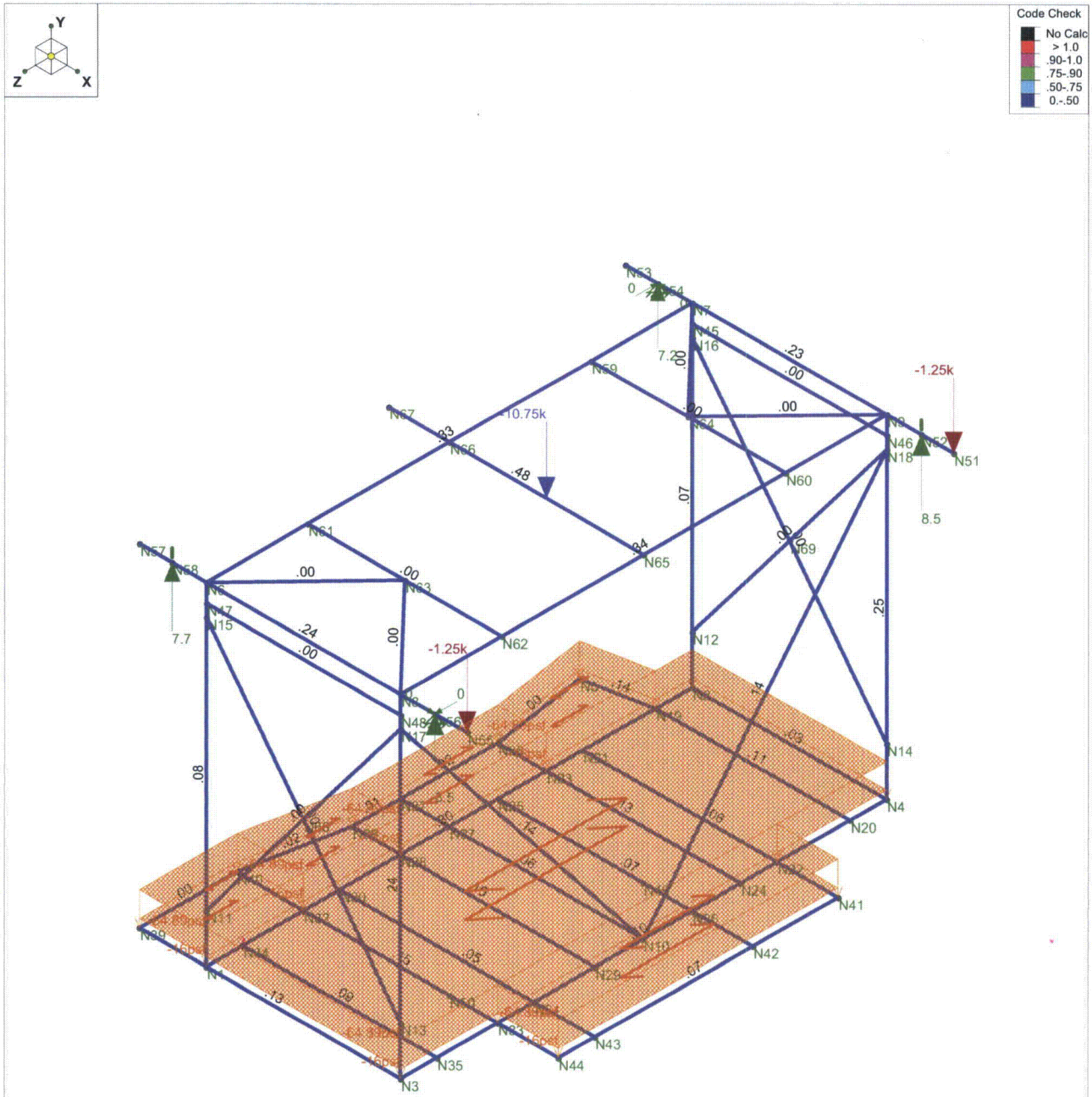

Member Code Checks Displayed
Loads: LC 4, DL+LL+RAM LOCATION #2
Results for LC 4, DL+LL+RAM LOCATION #2
Reaction units are k and k-ft

Precision Surveillance Corp	CR3 - BT3-120 Work Platform Design	
Brian Giometti		
CR-N1013-104		CR-N1013-104 BT3-120 WORK P...

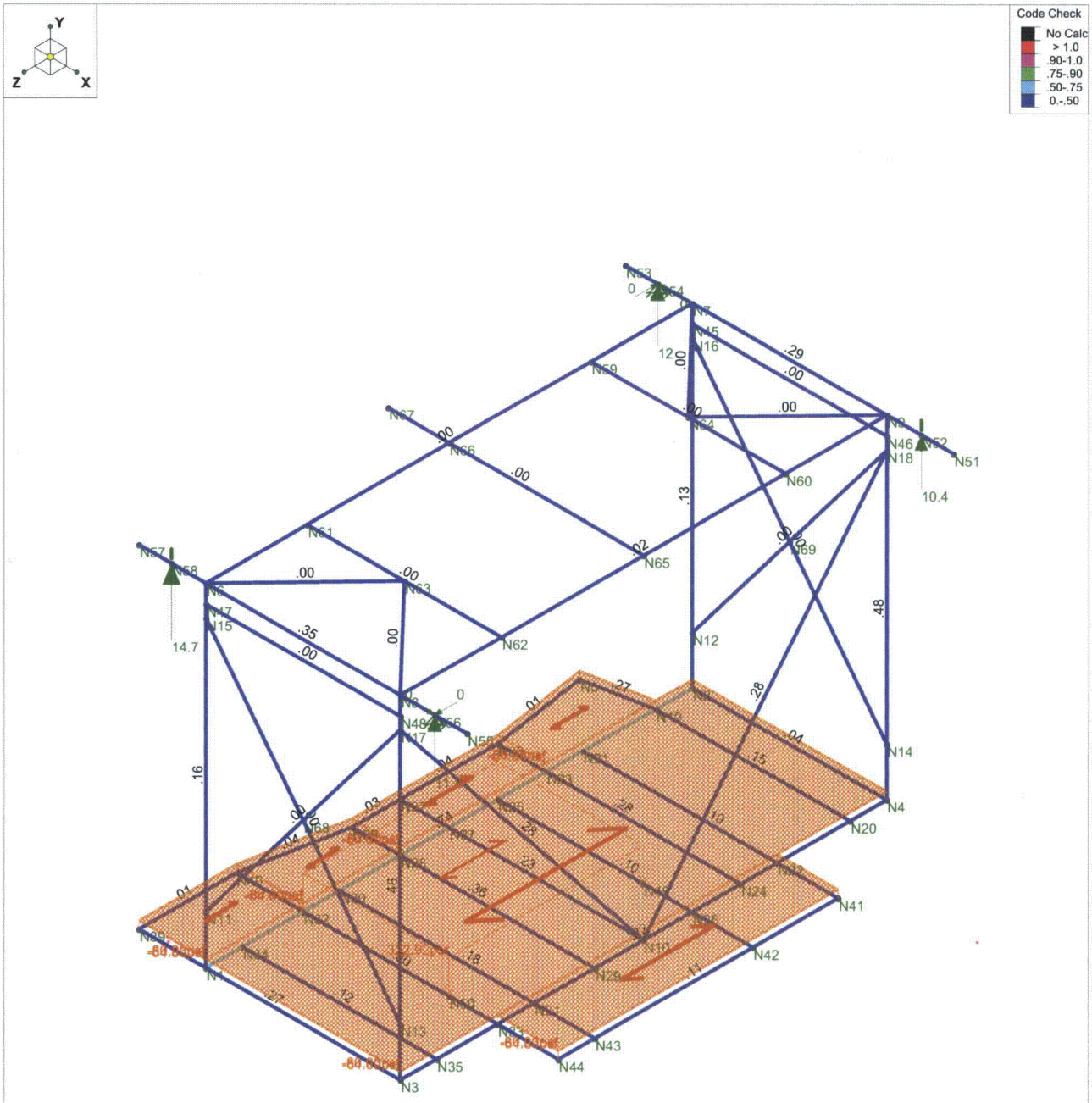

Member Code Checks Displayed
Loads: LC 5, DL+5LL+COILER (5:1)
Results for LC 5, DL+5LL+COILER (5:1)
Reaction units are k and k-ft

Precision Surveillance Corp	CR3 - BT3-120 Work Platform Design	
Brian Giometti		
CR-N1013-104		CR-N1013-104 BT3-120 WORK P...

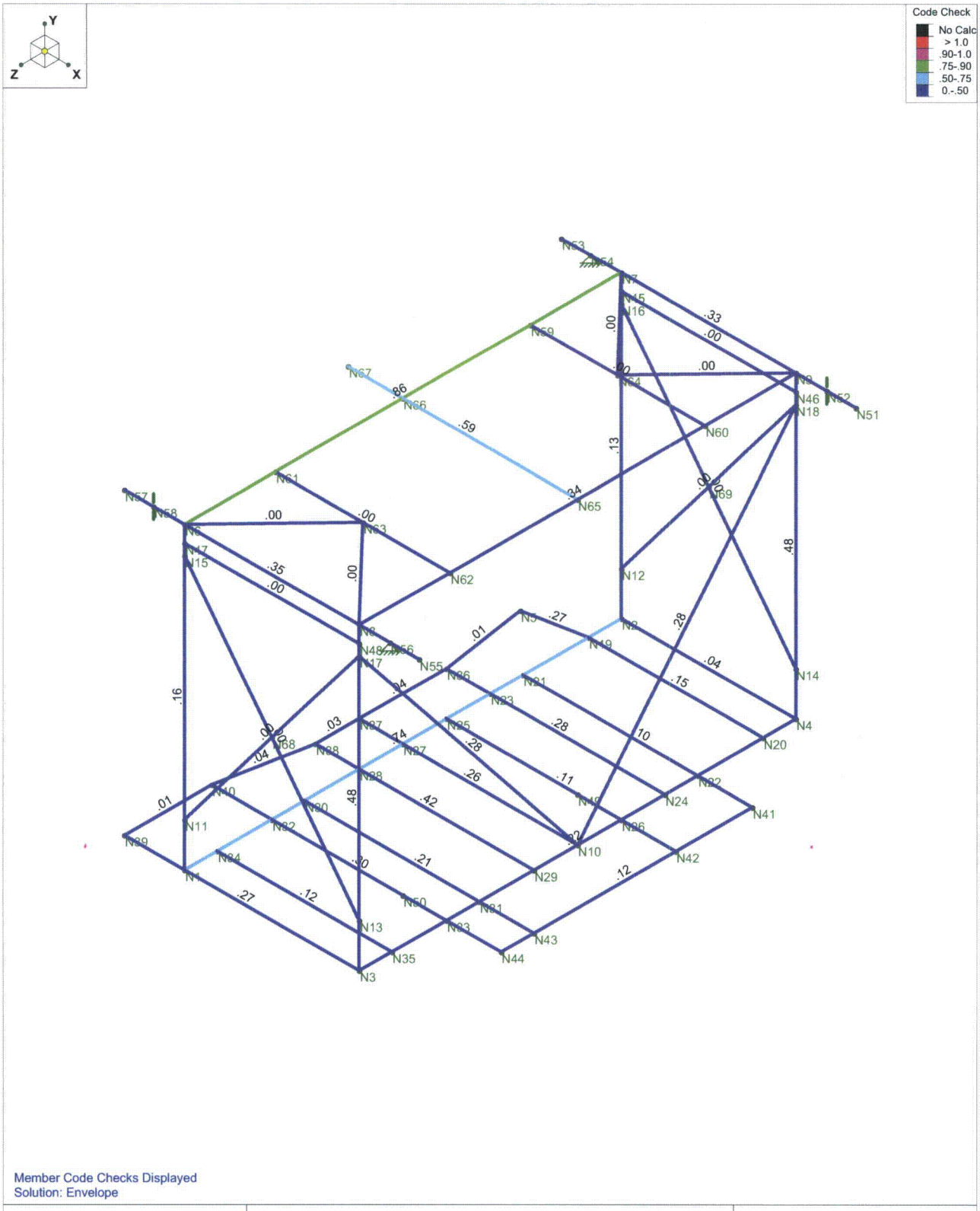

Precision Surveillance Corp	CR3 - BT3-120 Work Platform Design	
Brian Giometti		
CR-N1013-104		CR-N1013-104 BT3-120 WORK P...