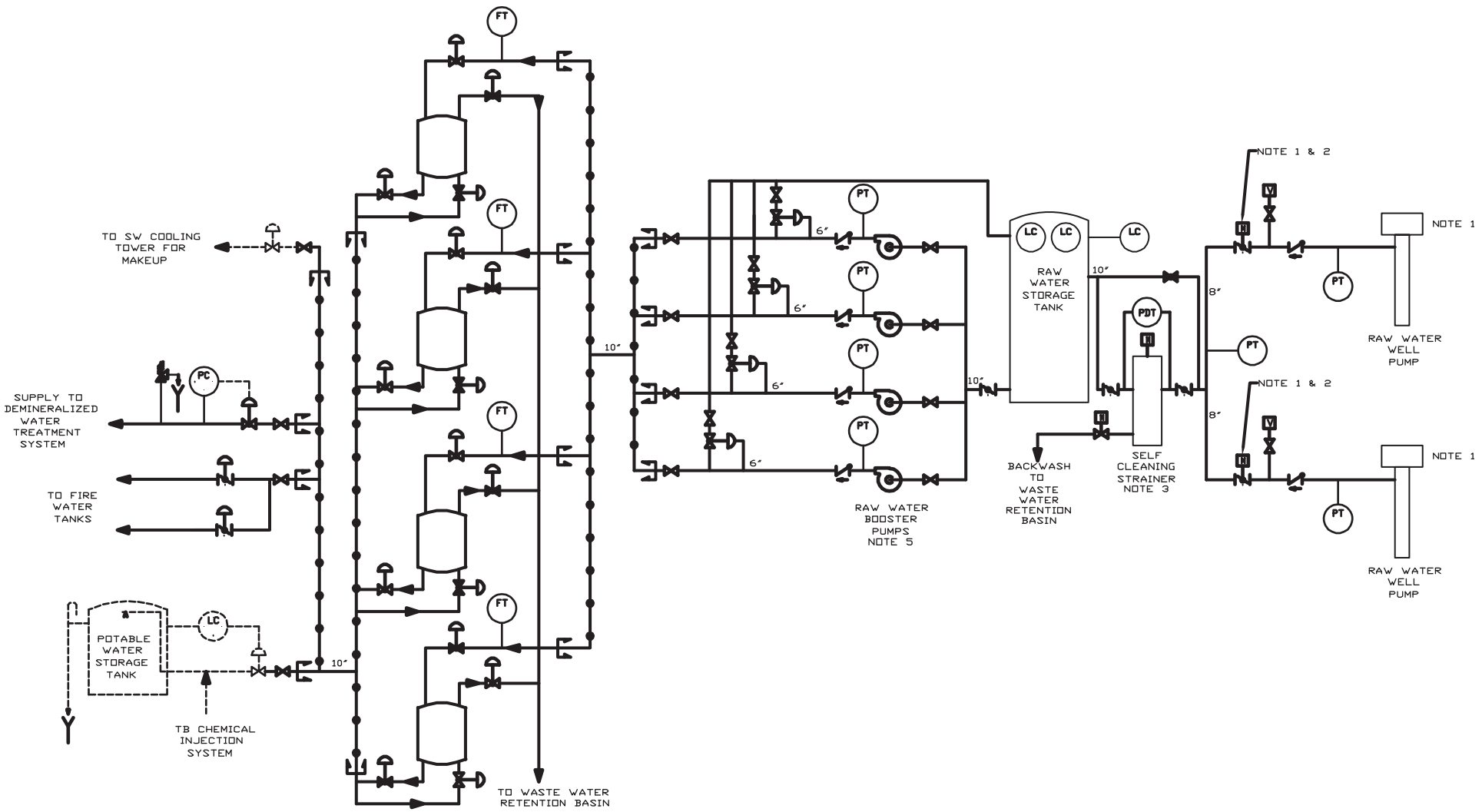

NOTES:
1. RAW WATER WELL PUMPS, AND THEIR DISCHARGE VALVES ARE PROVIDED DIESEL BACKED POWER.
2. VALVE OPENS WHEN PUMP STARTS AND CLOSES ON PUMP TRIP.
3. STRAINER CLEANING MOTOR AND BACKWASH VALVE WILL NORMALLY BE OPERATED ON A TIMER OR HIGH DIFFERENTIAL PRESSURE.
4. FILTER BACKWASH IS INITIATED FROM A TIMER AND THE VALVES WILL FAIL IN THE POSITION THAT MAINTAINS THE DISCHARGE FLOW ON AN AIR OR ELECTRICAL FAILURE.
5. RAW WATER BOOSTER PUMPS ARE PROVIDED WITH DIESEL BACKED POWER.

Progress Energy Florida

Levy Nuclear Plant
Units 1 and 2
Part 2, Final Safety Analysis Report

Raw Water System

FIGURE 9.2-201

Rev. 2