PSEG Nuclear LLC
P.O. Box 236, Hancocks Bridge, New Jersey 08038-0236

PSEG
Nuclear LLC

SEP 3 0 2010

10 CFR 50.90

LR-N10-0294

U.S. Nuclear Regulatory Commission
ATTN: Document Control Desk
Washington, DC 20555-0001

Hope Creek Generating Station
Facility Operating License No. NPF-57
NRC Docket No. 50-354

Subject: **Response to Request for Additional Information - License Amendment Request: Emergency Diesel Generators (EDG) A and B Allowed Outage Time (AOT) Extension**

References: (1) Letter from PSEG to NRC, "License Amendment Request: Emergency Diesel Generators (EDG) A and B Allowed Outage Time (AOT) Extension," dated March 29, 2010

(2) Letter from NRC to PSEG, "Hope Creek Generating Station – Supplemental Information Needed for Acceptance of Requested Licensing Action Re: Amendment Request Regarding Emergency Diesel Generator Allowed Outage Time Extension (TAC No. ME3597)," dated May 4, 2010

(3) Letter from PSEG to NRC, "Supplemental Information - License Amendment Request: Emergency Diesel Generators (EDG) A and B Allowed Outage Time (AOT) Extension," dated May 28, 2010

In Reference 1, PSEG Nuclear LLC (PSEG) submitted a license amendment request (H10-03) for the Hope Creek Generating Station (HCGS). The proposed change would modify TS 3/4.8.1, "AC Sources – Operating"; specifically ACTION b concerning one inoperable Emergency Diesel Generator (EDG). The proposed change would extend the Allowed Outage Time (AOT) for the 'A' and 'B' EDGs from 72 hours to 14 days. The proposed extended AOT is based on application of the Hope Creek Generating Station (HCGS) Probabilistic Risk Assessment (PRA) in support of a risk-informed extension, and on additional considerations and compensatory actions.

In Reference 2, the NRC requested supplemental information to complete the acceptance review of Reference 1. The PSEG response to the requested supplemental information was provided in Reference 3. Subsequently the NRC provided PSEG a Request for Additional Information (RAI) on the license amendment request. The responses to the non-PRA related RAI questions are provided in Attachment 1 of this letter (excluding the response to question 8.e; the response to this question will be provided in a subsequent submittal). The responses to the PRA related RAI questions are provided in Attachment 2 of this letter. Attachment 3 provides additional supporting documentation, as discussed in Attachment 1. Attachment 4 provides revised regulatory commitments.

A001
NRR

If you have any questions or require additional information, please do not hesitate to contact Mr. Jeff Keenan at (856) 339-5429.

I declare under penalty of perjury that the foregoing is true and correct.

Executed on 9-30-10
(Date)

Sincerely,

John F. Perry

John F. Perry
Site Vice President
Hope Creek Generating Station

Attachments (4)

S. Collins, Regional Administrator - NRC Region I
R. Ennis, Project Manager - USNRC
NRC Senior Resident Inspector - Hope Creek
P. Mulligan, Manager IV, NJBNE
Commitment Coordinator – Hope Creek
PSEG Commitment Coordinator - Corporate

REQUEST FOR ADDITIONAL INFORMATION

REGARDING PROPOSED LICENSE AMENDMENT

EMERGENCY DIESEL GENERATORS A AND B ALLOWED OUTAGE TIME EXTENSION

HOPE CREEK GENERATING STATION

DOCKET NO. 50-354

By application dated March 29, 2010, as supplemented by letter dated May 28, 2010 (Agencywide Documents Access and Management System (ADAMS) Accession Nos. ML100900458 and ML101590514, respectively), PSEG Nuclear LLC (the licensee) submitted a license amendment request for the Hope Creek Generating Station (HCGS). The proposed amendment would revise the Technical Specifications (TSs) to extend the allowed outage time (AOT) for the "A" and "B" emergency diesel generators (EDGs) from 72 hours to 14 days.

The Nuclear Regulatory Commission (NRC) staff has reviewed the information the licensee provided that supports the proposed amendment and would like to discuss the following issues to clarify the submittal.

1. *In Attachment 5 of the application dated March 29, 2010, the licensee has identified six regulatory commitments associated with this license amendment request. The commitments relate to compensatory actions which would be applicable during the extended AOT for the "A" and "B" EDGs. These compensatory actions would be incorporated into the TS Bases concurrent with implementation of the proposed amendment. The NRC staff requests the following information:*

    a. *Commitment #1 requires verification of availability and operability of systems, subsystems, trains, components, and devices required to mitigate the consequences of an accident prior to removing an EDG for extended preventive maintenance. This is to be done through TSs, procedures, or detailed analyses.*

        1. *What is the specific scope of plant equipment covered by this commitment?*

RESPONSE TO 1.a.1

The scope of equipment covered by this commitment reflects what is credited in the A and B EDG AOT risk assessment (Attachment 4 of the March 29, 2010 LAR). This equipment is listed below.

A EDG	B EDG
HPCI/RCIC	HPCI/RCIC
C EDG	D EDG

This commitment is effectively subsumed by original Commitments 3 and 4 (as revised); therefore PSEG proposes to delete this commitment.

Note that the HCGS Bases already had NRC-approved commitments/compensatory measures for the C and D EDG; PSEG aligned the proposed A and B EDG compensatory measures with the existing C and D measures, where appropriate. This included utilizing similar terminology. It was PSEG's intention to combine the compensatory measures for all 4 EDGs into a common list subsequent to the approval of the A and B amendment request (the A and B EDG AOT amendment request did not reflect this planned common list combination in order to facilitate the NRCs review of the A and B proposed change.). However, following further consideration, PSEG has decided to revise the A and B commitments/compensatory measures to align precisely with the A and B EDG AOT risk assessment. Deleting Commitment 1 is consistent with this approach. A revised list of proposed commitments is provided in Attachment 4. Original Commitments 3 and 4 correspond to revised Commitments 1 and 2, respectively, in Attachment 4.

2. *Is this verification required only when it is planned to remove an EDG from service (as opposed to emergent failure of an EDG) for preventive maintenance, and is it only applicable when exceeding 72 hours? What about corrective maintenance or other inoperable causes?*

RESPONSE TO 1.a.2

This commitment is effectively subsumed by Commitments 3 and 4 (as revised); therefore PSEG proposes to delete this commitment. This verification, as implemented by Commitments 3 and 4, is required for planned inoperability or emergent failures of all of the EDGs. Since there will not be separate Technical Specifications for 72 hour and 14 day LCOs, these requirements will be met each time the EDG is removed from service. .

3. *If components in scope are covered by an existing TS limiting condition for operation (LCO), is meeting the LCO and action requirements considered adequate to satisfy the commitment, or does the LCO need to be met without reliance upon the action requirements? Why are these operability requirements not directly referenced in the TS action requirements for TS 3.8.1.1, rather than referring to the TS Bases and then to the LCOs?*

RESPONSE TO 1.a.3

This commitment is effectively subsumed by Commitments 3 and 4 (as revised); therefore PSEG proposes to delete this commitment.

The components in scope of this commitment are covered by existing TS LCOs, and the LCO needs to be met without reliance upon the action requirements to satisfy the commitment.

These commitments / compensatory measures are appropriately included in the Bases for the following reasons:

- 10 CFR 50.36 establishes the TS LCO requirements:

> Limiting conditions for operation are the lowest functional capability or performance levels of equipment required for safe operation of the facility. When a limiting condition for operation of a nuclear reactor is not met, the licensee shall shut down the reactor or follow any remedial action permitted by the technical specifications until the condition can be met.

The definition of remedial actions is described in the improved Standard Technical Specifications (NUREG-1433):

> ACTIONS shall be that part of a Specification that prescribes Required Actions to be taken under designated Conditions within specified Completion Times.

The compensatory measures for the EDG AOT extension do not meet the requirements for inclusion in TS as ACTION statements. These Tier 2 compensatory measures are in support of a PRA based analysis and they are pre-requisites prior to entering the extended AOT supplementing the PRA analysis. They are not remedial actions to be taken if the LCO is not met, and they do not have specified completion times.

Also note that the revised commitments use the TS definition term "OPERABLE", consequently when meeting this commitment the required components will be TS OPERABLE.

- Compensatory measures are appropriately included in the TS Bases. HCGS Amendment 75 (ADAMS ML011770266) dated August 1, 1995, granted the extension of the C and D EDG AOT to 14 days. Amendment 75 included compensatory measures that were part of the TS Bases. Establishing compensatory measures in the TS Bases is consistent with other recent EDG AOT extension amendments (see Section 5.3 of LAR H10-03, ADAMS ML100900458). Consistent with industry and regulatory precedent, PSEG proposed compensatory measures to be included in the TS Bases. Further, since the HCGS Bases already had NRC-approved compensatory measures for the C and D EDG, PSEG aligned the proposed A and B compensatory measures with the existing C and D measures, where appropriate. However, as discussed in the response to 1.a.1, PSEG has decided to revise the A and B commitments/compensatory measures to align precisely with the A and B EDG AOT risk assessment. If a required compensatory measure is already addressed by TS, then no commitment is needed. If the compensatory measure is not covered by TS, then a commitment is the appropriate method to capture the required measure.

4. *What components in the scope of this commitment (accident mitigation equipment) are not covered by the TSs and therefore may require procedural or detailed analyses to confirm availability?*

<u>RESPONSE TO 1.a.4</u>

This commitment is effectively subsumed by Commitments 3 and 4 (as revised); therefore PSEG proposes to delete this commitment. As implemented by Commitments 3 and 4, the required systems are covered by TS to confirm operability.

5. *If a component in the scope of this commitment subsequently becomes unavailable or inoperable during the extended outage period, what TS action is required?*

RESPONSE To 1.a.5

This commitment is effectively subsumed by Commitments 3 and 4 (as revised); therefore PSEG proposes to delete this commitment. As implemented by Commitments 3 and 4, the TS action required is the action associated with that piece of equipment. However, with an EDG also INOPERABLE, an additional assessment must be made ('cascading') on the effect to the systems supplied by the out of service EDG.

Cascading is addressed in PSEG Procedure OP-HC-108-115-1001, Exhibit 2:

> when a single EDG is declared INOPERABLE, evaluate whether other EDG supported equipment on the redundant electrical busses are capable of fulfilling their specified safety function(s) under design-basis accident conditions. If the redundant components cannot be relied upon to fully satisfy their intended safety function then appropriate conservative action must be taken up to and including entry into T/S 3.0.3, as appropriate.
> (Reference Generic Letter 91-18)

This issue is also discussed in NRC Inspection Manual Part 9900, Appendix C.9.

6. *Why is the term "available and operable" applied and how is this different than simply requiring a component to be "operable?"*

RESPONSE TO 1.a.6

This commitment is effectively subsumed by Commitments 3 and 4 (as revised); therefore PSEG proposes to delete this commitment. As implemented by Commitments 3 and 4, only the "operable" term will be retained.

7. *It is not clear how detailed analyses are intended to be used to determine the operability/availability of components to satisfy this commitment. Describe under what conditions such analyses would be needed, and describe such analyses.*

RESPONSE TO 1.a.7

This commitment is effectively subsumed by Commitments 3 and 4 (as revised); therefore PSEG proposes to delete this commitment. As implemented by Commitments 3 and 4, TS requirements negate the need for any additional procedural or analysis controls.

8. *The commitment says Hope Creek "should" verify operability and availability; why isn't this more firmly worded since it is a commitment?*

RESPONSE To 1.a.8

This commitment is effectively subsumed by Commitments 3 and 4 (as revised); therefore PSEG proposes to delete this commitment. As implemented by Commitments 3 and 4, the required actions are more firmly worded.

b. *Commitment #2 requires positive measures to preclude testing or maintenance activities on the components in the scope of commitment #1 (this is assumed to be the meaning of "these systems, ..."). Why isn't the commitment worded more directly, such as "do not perform any voluntary testing or maintenance on otherwise operable components", rather than "positive measure should be provided to preclude...?" What constitutes a "positive measure?" Under what conditions could testing or maintenance activities be initiated but remain within the intent of this commitment?*

RESPONSE TO 1.b

This commitment is effectively replaced by Commitments 3 and 4 (as revised); therefore PSEG proposes to delete this commitment. As implemented by Commitments 3 and 4, the required actions are more firmly worded.

c. *Commitment #3 requires the second EDG in the same mechanical division to be "capable, operable and available?"*

   1. *How is "capable, operable and available" different than "operable?"*

RESPONSE to 1.c.1

This commitment will be re-worded as follows:

> **When the A EDG is removed from service for an extended 14 day AOT, the C EDG shall be OPERABLE. When the B EDG is removed from service for an extended 14 day AOT, the D EDG shall be OPERABLE.**

As discussed in the response to 1.a.1, PSEG aligned the proposed A and B EDG AOT compensatory measures with the existing C and D measures, where appropriate. This included utilizing similar terminology. The terms "capable" and "available" are used in the existing equivalent compensatory measure for the C and D EDG AOT. The terms are effectively redundant to the term "operable"; therefore, the "capable" and "available" terms have been removed in the revised commitment wording (see revised List of Commitments, Attachment 4 of this submittal).

   2. *The existing TS 3.8.1.1 action e already provides a 2-hour completion time (CT) for the condition of two inoperable EDGs. It appears that this commitment would supercede this 2-hour CT and require an immediate shutdown. Is this a correct interpretation of this commitment? If not, please explain the intent of the commitment; if so, why is this not incorporated into required action e?*

RESPONSE To 1.c.2

The commitment, as revised, would require us to verify the second EDG in the same mechanical division to be OPERABLE prior to removing the EDG from service for the extended AOT. Once the EDG is removed from service, if the second EDG were to become INOPERABLE, TS 3.8.1.1 Action e would be invoked with the required 2 hour completion time as is currently required for the 72 hour AOT.

d. *Commitment #4 requires minimizing removal of safety systems and important non-safety systems from service.*

   1. *What is the scope of systems included in this commitment?*

RESPONSE TO 1.d.1

This commitment will be re-worded as follows:

> **When either the A or B EDG is removed from service for an extended 14 day AOT, both HPCI and RCIC shall be OPERABLE.**

As discussed in the response to 1.a.1, PSEG has decided to revise the A and B commitments/compensatory measures to align precisely with the A and B EDG AOT risk assessment, versus consistency/alignment with the C and D EDG AOT measures (see revised List of Commitments, Attachment 4 of this submittal).

   2. *Explain how this commitment differs from commitments #1 and #2.*

RESPONSE To 1.d.2

This commitment will be re-worded as discussed in 1.d.1.

   3. *Offsite power sources are identified in this commitment; doesn't the existing TS 3.8.1.1 actions c and g already address offsite power sources while an EDG is inoperable?*

RESPONSE To 1.d.3

In the event one of the required circuits between the offsite transmission network and the onsite Class 1E distribution system became inoperable when one EDG was inoperable, TS 3.8.1.1 Action c would apply.

Additionally, this commitment will be re-worded as discussed in 1.d.1.

   4. *What constitutes "minimizing" with regards to this commitment? Under what conditions, would these systems be permitted to be removed from service but remain within the intent of this commitment?*

RESPONSE To 1.d.4

This commitment will be re-worded as discussed in 1.d.1.

e. *Commitment #5 requires avoiding testing or maintenance which increases the likelihood of a plant transient. What is the scope of this commitment and how is the determination made as to the likelihood of a plant transient? Specifically describe how the decision to initiate testing or maintenance during the extended EDG outage is more restrictive compared to such decisions when the EDG is operable.*

RESPONSE TO 1.e

This commitment will be re-worded as follows:

> **Any component testing or maintenance that increases the likelihood of a plant transient shall be avoided during the extended 14 day AOT. This encompasses work activities categorized as Production Risk.**

The work week activities are given a production risk screening per PSEG Procedure WC-AA-104. If any activity screens 'in' for a production risk it would be excluded from performance during an extended A and B EDG outage (see revised List of Commitments, Attachment 4 of this submittal. Original Commitment 5 corresponds to revised Commitment 3 in Attachment 4.).

f. *Commitment #5 further states that plant operation should be stable. How is this defined?*

RESPONSE To 1.f

This commitment will be re-worded as discussed in 1.e; the revised wording ensures no work activities will be performed that are a production risk.

g. *Commitment #6 recommends not voluntarily entering an extended outage when adverse weather is expected. What is the scope of "adverse weather?" What constitutes an "expectation" of severe weather (i.e., 10% probability at day 14 of a long range forecast)?*

RESPONSE To 1.g

PSEG has a previous commitment contained in PSEG Procedure HC.OP-AB.MISC-0001, "ACTS OF NATURE". This commitment requires PSEG to return EDGs to an operable status if Hurricane, Tropical Storm or Coastal flood WARNINGS are issued for the area. The procedure will be enhanced to include a requirement to review the 10 day forecast for Hurricane, Tropical Storm and Coastal flood WARNINGS. If any of these WARNINGS are forecasted for the period, the EDG extended outage will be deferred. Based on this information, the frequency of a Weather Related LOOP event during the 14-day EDG AOT would be much less than the nominal frequency used in the baseline Hope Creek PRA model.

Because entry into the 14 day AOT may be due to unplanned EDG failure or could occur in a planned EDG outage when weather forecasts fail to identify severe weather, the conditional probability of 0.25 that severe weather could still occur is included in the risk assessment for the change in risk.

Note that original Commitment 6 corresponds to Commitment 4 in Attachment 4.

h. *On page A-18 of Attachment 4 of the application dated March 29, 2010, four additional compensatory measures are identified related to fire risk results which do not appear in the commitment list. Are these intended to be implemented as commitments?*

RESPONSE

See Attachment 2 of this submittal

2. *TS 3.8.1.1 action g requires restoration of all alternating current (AC) sources in 72 hours. Describe how this required action is applied consistent with a 14-day CT for the EDGs. For example, if an extended CT is entered on one EDG, and subsequently action g is entered due to emergent failures, does the 72 hour CT in action g now supercede the 14-day CT?*

RESPONSE To 2

The 72 hour CT in action g would supersede the 14 day completion time. For this condition to occur another EDG would become inoperable and one of the TS required off-site circuits would also be lost. Condition g would override the 14 day LCO and we would be required to restore all sources within 72 hours.

3. *The fire probabilistic risk assessment (PRA) portion of the risk analysis is based on the Individual Plant Examination of External Events (IPEEE) fire evaluation, which has been updated to reflect some new data and practices. However, the models have not been assessed against the industry consensus standards, and no formal peer review has apparently been done.*

   a. *Have there been any external reviews of the fire PRA since the IPEEE? If so, describe the scope and findings of the reviews and the resolution of the identified issues for this application.*

RESPONSE

See Attachment 2 of this submittal

   b. *What internal reviews have been done to the fire PRA since the IPEEE? Similarly describe the scope and findings of the reviews and the resolution of the identified issues for this application.*

RESPONSE

See Attachment 2 of this submittal

4. *The fire risk evaluation of the configuration of one EDG out of service has not been described in sufficient details in the application.*

   a. *It is stated that only fires which cause a loss of offsite power are relevant to this application. With one EDG out of service, increased risk would result from reliance upon the remaining operable safety train of equipment in the event that offsite power is lost to the electrical bus normally powered by the unavailable EDG (i.e., not necessarily a total loss of offsite power). This can occur from either a total loss of offsite power or a loss of offsite power to the one electrical bus. Are both of these scenarios captured in the fire PRA used for this application?*

RESPONSE

See Attachment 2 of this submittal

   b. *As identified in Table 2-1 of Attachment 2 the supplemental dated May 28, 2010, fire scenarios may be screened below a threshold of 1E-6 per year core damage frequency (CDF). For a specific application like the analysis of risk for an EDG outage, some screened scenarios may become more significant. If screening of scenarios was performed for the baseline PRA, discuss the review of screened fire scenarios to assure that the configuration-specific risk is not underestimated.*

RESPONSE

See Attachment 2 of this submittal

   c. *Multiple spurious operations have been found to be potentially significant to fire risk, yet these are dispositioned for HCGS only by acknowledging that the treatment of this failure mode in the IPEEE was "rudimentary," and then stating that hot shorts were considered for specific systems only. For this application, how has the licensee assured that a more comprehensive treatment of multiple spurious operations, given the current state of knowledge, would not significantly impact the risk results for fire?*

RESPONSE

See Attachment 2 of this submittal

   d. *The submittal dated May 28, 2010, states that no credit is taken for any suppression. This seems to be unlikely, since it would mean that any fire precursor event would progress to a large engulfing fire. Clarify exactly how suppression is addressed in the fire PRA.*

RESPONSE

See Attachment 2 of this submittal

e. *It is not clear if recovery of offsite power following loss due to fire effects is being credited in the analysis. Clarify how the PRA addresses post-fire repairs and recovery of plant equipment and offsite power supplies.*

RESPONSE

See Attachment 2 of this submittal

f. *One critical aspect of fire PRA development involves the physical location of cables. One approach when the locations are mostly unknown employs an "exclusion" assumption, that cables are assumed to be located anywhere except where they are known not to be present. Some cable routing information may not be readily available, and assumptions as to the location of such cables may be made to simplify the data collection to support the PRA development. Are such assumptions employed in the HCGS PRA development? If so, describe and justify these assumptions, and characterize their significance to this specific application.*

RESPONSE

See Attachment 2 of this submittal

g. *Describe any plant-specific features of the HCGS design related to detection, suppression, and mitigation of fires which are credited in the fire PRA. Examples of such items would be credit for water curtains, incipient detection, credit for prompt detection and/or suppression based on administrative controls, or other items that may be relevant to the risk analyses supporting this amendment request.*

RESPONSE

See Attachment 2 of this submittal

h. *Describe how fire growth and propagation are treated in the HCGS fire PRA. Specifically identify and justify any assumptions applied, and any fire modeling and codes used*

RESPONSE

See Attachment 2 of this submittal

i. *Fires occurring in the main control room, or other plant areas, which can lead to evacuation of the control room (including evacuation due to loss of functionality, not necessarily habitability, especially for ex-Control Room fires), have sometimes been conservatively modeled in fire PRAs. This can mask the risk importance of out-of-service equipment if such fires are conservatively assumed to be unmitigatable. In addition, some plants only protect a single safety train of equipment for remote shutdown, so if a control room fire occurred during maintenance on that specific train of equipment, mitigation may not be available. It is assumed that a control room fire could cause a loss of power to a bus during the diesel generator outage. Identify and*

describe the impact of such fires on the configuration-specific risk analyses for the diesel generator outage configurations, addressing any conservatisms in assumptions, and impacts due to plant design of remote shutdown capability.

RESPONSE

See Attachment 2 of this submittal

5. *The submittal identifies that based on a 14-day weather forecast; the frequency of loss of offsite power (LOOP) due to severe weather is reduced by 75%. Given the uncertainty of weather forecasting over extended periods, and since the licensee does not preclude the use of the 14-day extended CT for unplanned repairs, this reduction in frequency could be introducing a non-conservative bias in the risk results.*

   a. *Identify the nominal LOOP frequency applied in the baseline PRA, and the reduced frequency used for this application, and describe how each of these frequencies were calculated. Justify the assumption of a 75% reduction in severe weather LOOP for a 14-day CT.*

RESPONSE

See Attachment 2 of this submittal

   b. *The offsite power recovery probability is directly dependent upon the cause of the loss of offsite power. Provide the baseline and analysis probabilities for offsite power recovery, and describe how the exclusion of 75% of the severe weather event frequency has been accounted for in the offsite power recovery probabilities.*

RESPONSE

See Attachment 2 of this submittal

   c. *Provide a sensitivity analysis for the risk results if the nominal loss of offsite power frequency and recovery probabilities are retained for the configuration-specific risk evaluation.*

RESPONSE

See Attachment 2 of this submittal

6. *Given a LOOP and failure of EDGs (station blackout), describe the assumptions for equipment credited in the PRA internal events model for continued core cooling. Include in your response any operator actions necessary, assumptions on environmental conditions given a station blackout, water inventories and makeup sources, and mission times. Does the PRA assume that core damage can be prevented even if AC power is not restored, or is offsite power recovery or diesel generator repair necessary?*

RESPONSE

See Attachment 2 of this submittal

7. *Considering that HCGS has four EDGs for a one unit plant, confirm the minimum number of EDGs that are required in each of following scenarios: (1) loss of offsite power (LOOP) concurrent with a loss-of-coolant accident (LOCA); (2) LOOP while operating at full power; and (3) plant in extended hot or cold shutdown condition. Provide details on the maximum loads that will be connected to each EDG in each of the above scenarios, assuming a single failure of an EDG.*

RESPONSE TO 7

Scenario (1) requires any three of the four EDGs, Scenario (2) requires any three of the four EDGs, and Scenario (3) requires two EDGs, one of which has to be the A or B EDG to support A or B RHR pump in shutdown cooling operation.

EDG loading detail is documented in Attachment 3 of this submittal: PSEG calculation E-9(Q), Standby Class 1E Diesel Generator Sizing, Revision 8. Calc E-9(Q), Attachment 8, Summary of SDG Loading, shows maximum loading for Scenario (1) and Scenario (2). Scenario (3) loading is bounded by Scenarios 1 and 2.

8. *Provide the following information relating to the Alternate AC source, proposed as an additional compensatory measure by the licensee in its letter dated May 28, 2010:*

   a. *A diagram which shows the connections between Salem Unit 3 Gas Turbine Generator (GTG) and the HCGS safety-related buses.*

RESPONSE TO 8.a

The requested diagram is provided in Attachment 3: PSEG drawing 601701 S 1000 – 33, Salem / Hope Creek Generating Station 500, 13.8, 4 KV Elementary One Line.

Additional information is also available on HCGS Single Line Diagram E-0001-0 (Q) and Salem No. 1 and No. 2 Units Generators & Main Transformers One Line Control Diagram 203000 S 8789-53. (also included in Attachment 3)

   b. *Confirm the estimated total time that will be required to enable the GTG to supply power to the HCGS safety-related buses from the onset of a LOOP condition, considering the various switching actions required.*

RESPONSE TO 8.b

The total time required to enable the GTG to supply power to the HCGS vital buses is estimated to be three hours. This estimate was developed by interviewing operators from Salem and Hope Creek on the time required to execute the applicable portions of the existing approved station procedural guidance on response to a LOOP / SBO event.

c. *Details on a previous occasion, if the GTG has been connected to supply HCGS safety-related buses.*

RESPONSE TO 8.c

There are no previous occasions where the GTG was connected to the HCGS vital buses. The switchyard configuration required to directly connect the GTG (independent of offsite power) to the HCGS vital buses creates a complete loss of offsite power condition to HCGS and is not desirable in any normal plant operating condition.

d. *Details on reliability of the GTG and frequency of maintenance activities performed on the GTG to ensure high reliability.*

RESPONSE TO 8.d

The Salem Unit 3 GTG is started periodically under Salem Generating Station maintenance plan PM000905 per station procedure S3.OP-SO.JET-0001, Gas Turbine Operation. This activity verifies Operations' ability to start and load the GTG on a monthly frequency.

From January 2009 to present the following issues were identified related to the operation (32 start / load demands) of the GTG:

- Physical damage to connection cable (1 event)
- Inadequate procedural guidance (3 events)
- Turbine auto-synchronization (TAS) card (2 events) – Only prevented turbine from synchronizing to grid
- Miscommunication within the digital control system (1 event)

Out of the seven issues shown above, four were due to equipment issues and three were based upon procedural deficiencies. Also, out of the four that could be classified as equipment issues, two of these events (the TAS card failures) only prevented the turbine jet from synchronizing to the grid. The jet would have been capable of energizing the bus on a "dead bus" event. The remaining two equipment failures that caused a failure to start / trip of the turbine have had corrective actions completed and the turbine has been operating satisfactorily without a reoccurrence of the issue.

A comprehensive preventive maintenance plan, based on PCM Templates, is in place to ensure reliable GTG performance. The preventive maintenance plan includes periodic instrumentation calibrations (8 year frequency), gas turbine relay and protective device calibration (3 year frequency), a GTG start under simulated dead bus conditions (1 year frequency) and an engine replacement / overhaul (10 year frequency).

e. *Considering the distance involved from Salem, confirm whether the GTG has been evaluated to ensure its capability to start and run large loads at the HCGS buses expected during a LOOP or station blackout (SBO). Discuss the capability of the GTG to cope with inrush currents associated with energization of large transformers during black start conditions.*

RESPONSE TO 8.e

The response to this question will be provided in a subsequent submittal.

f. Confirm that the GTG is not credited in Salem design basis events including SBO.

RESPONSE TO 8.f

The GTG (Salem Unit 3) is not credited in the Salem and Hope Creek Generating Station current design basis events including the SBO Event.

9. An AOT extension for 14 days for EDGs "C" and "D" was approved by the NRC on August 1, 1995. In the current license amendment request, the compensatory measures for the proposed AOT extension for EDGs "A" and "B" and the previously approved AOT extension for EDGs "C" and "D" are separately listed in the TS Bases. These compensatory measures should be combined into a common list. Also, based on some of the previously approved extension of AOTs, explain the licensee's plans to implement the following additional compensatory measures:

RESPONSE TO 9

As discussed in the response to 1.a.1, PSEG initially aligned the proposed A and B compensatory measures with the existing C and D EDG AOT measures, where appropriate. This included utilizing similar terminology. It was PSEG's intention to combine the compensatory measures for all 4 EDGs into a common list subsequent to the approval of the A and B amendment request (the A and B EDG AOT amendment request did not reflect this planned common list combination in order to facilitate the NRCs review of the A and B proposed change.). However, following further consideration, PSEG has decided to revise the A and B commitments/compensatory measures to align precisely with the A and B EDG AOT risk assessment.

a. Maintenance will not be performed in the switchyard that would challenge offsite power availability during the 14-day EDG AOT.

RESPONSE TO 9.a

As discussed in the response to 1.a.1, PSEG has decided to revise the A and B EDG AOT commitments/compensatory measures to align precisely with the A and B EDG AOT risk assessment. The risk assessment for the A and B EDG AOT extension does not rely on, or credit, this compensatory measure. The addition of this commitment would further reduce the already very low risk contribution associated with the EDG AOT extension. This commitment is effectively covered by the original Commitment 5 (as revised it is Commitment 3 in Attachment 4); i.e., maintenance work in the switchyard categorized as "Production Risk" would not be scheduled during the 14-day A and B EDG AOT.

In the event one of the required circuits between the offsite transmission network and the onsite Class 1E distribution system became inoperable when one EDG was inoperable, TS 3.8.1.1 Action c would apply.

b. The system dispatcher will be contacted once per day and informed of the EDG status along with the power needs of the facility during the 14 day EDG AOT.

RESPONSE TO 9.b

As discussed in the response to 1.a.1, PSEG has decided to revise the A and B EDG AOT commitments/compensatory measures to align precisely with the A and B EDG AOT risk assessment. The risk assessment does not rely on this measure; therefore it is not required for this AOT request.

c. *Maintenance will not be performed on the high-pressure core injection and the reactor core isolation cooling systems during the 14 day EDG AOT.*

RESPONSE TO 9.c

This commitment is covered by the Commitment 2 (as revised in Attachment 4)

d. *Operating crews will be briefed on the EDG work plan and procedural actions regarding LOOP and SBO.*

RESPONSE TO 9.d

As discussed in the response to 1.a.1, PSEG has decided to revise the A and B commitments/compensatory measures to align precisely with the A and B EDG AOT risk assessment. The risk assessment does not rely on this measure; therefore it is not required for this AOT request.

e. *Availability of the GTG will be checked before any EDG entering extended AOT (beyond 72 hours), and every 12 hours thereafter.*

RESPONSE TO 9.e

As discussed in the response to 1.a.1, PSEG has decided to revise the A and B commitments/compensatory measures to align precisely with the A and B EDG AOT risk assessment. The risk assessment does not rely on this measure (as discussed in the response to 8.f); therefore it is not germane to this AOT request. However, as an additional level of defense in depth, a commitment related to the availability of GTG will be included in the A and B EDG AOT request (see Commitment 5 in the revised List of Commitments, Attachment 4 of this submittal).

10. *Explain the licensee's plan to amend TS 3.8.1.1 to require compensatory measures to be in place before entering 14 days AOT, and verified once per 12 hours, otherwise restore EDG to operable status within next 72 hours, not to exceed 14 days from discovery of failure to meet LCO.*

RESPONSE TO 10

No additional TS Action requirements are necessary, as discussed in the response to 1.a.3. Establishing PRA based compensatory measures in the TS Bases is consistent with other recent EDG AOT extension amendments (see Section 5.3 of LAR H10-03, ADAMS ML100900458). Consistent with industry and regulatory precedent, PSEG proposed

compensatory measures to be included in the TS Bases. Further, since The HCGS Bases already had NRC-approved compensatory measures for the C and D EDG, PSEG aligned the proposed A and B compensatory measures with the existing C and D measures, where appropriate. However, as discussed in the response to 1.a.1, PSEG has decided to revise the A and B commitments/compensatory measures to align precisely with the A and B EDG AOT risk assessment. If a required compensatory measure is already addressed by TS, then no commitment is needed. If the compensatory measure is not covered by TS, then a commitment is the appropriate method to capture the required measure.

PSEG's configuration risk management program requires configuration risk assessment of planned maintenance activities prior to initiating any maintenance activity in accordance with 10 CFR 50.65(a)(4). PSEG procedures provide additional controls to protect the operability of redundant equipment and provide for the evaluations of emergent maintenance required by 10 CFR 50.65.

The current Hope Creek TS and 10 CFR 50.65 require sufficient controls on concurrent maintenance and testing activities and require evaluation of the impact of emergent maintenance activities.

PRA Related RAI Responses

This attachment provides the responses to RAIs that primarily relate the methods and approaches used to assess the risk for the EDG AOT extension. These responses are referenced in Attachment 1 of this package.

REQUEST FOR ADDITIONAL INFORMATION

REGARDING PROPOSED LICENSE AMENDMENT

EMERGENCY DIESEL GENERATORS A AND B ALLOWED OUTAGE TIME EXTENSION

HOPE CREEK GENERATING STATION

DOCKET NO. 50-354

This attachment provides the responses to RAIs that primarily relate the methods and approaches used to assess the risk for the EDG AOT extension. These responses are referenced in Attachment 1 of this package.

1h. On page A-18 of Attachment 4 of the application dated March 29, 2010, four additional compensatory measures are identified related to fire risk results which do not appear in the commitment list. Are these intended to be implemented as commitments?

RESPONSE TO 1.h

The four additional compensatory measures on page A-18 of Attachment 4 are not intended to be implemented as additional commitments. These compensatory measures have been identified to reduce the risk from fire events during performance of the extended AOT. The four compensatory measures are specifically addressed as follows:

- Fire Compensatory Measure 1: Proper standby alignment of the opposite EDG train should be ensured prior to entry into the AOT as this would reduce the contribution from potential pre-initiator errors.

  Ensuring proper alignment of an operable EDG train is performed on a daily basis. Diesel building equipment operator rounds include verification of proper switch positions and indications, including annunciator status. EDG alarms are annunciated in the Main Control Room and alarm response procedures ensure proper response to unexpected alarms. Commitment #1 in Attachment 4 of this submittal implements this compensatory measure.

- Fire Compensatory Measure 2: Besides the protected opposite EDG trains, elective maintenance should be avoided on all SACS and SSW trains that support the protected EDG trains.

  This compensatory measure is not credited in the risk assessment.

- Fire Compensatory Measure 3: Minimize general plant testing and electrical maintenance with the EDG out of service.

  Production risk screening per PSEG Procedure WC-AA-104 includes guidance to preclude voluntary testing and maintenance activities that significantly increase the probability of a plant transient during the extended EDG AOT maintenance window. Commitment #3 in Attachment 4 of this submittal effectively implements this additional compensatory measure.

- Fire Compensatory Measure 4: Increase fire protection measures (e.g., transient material surveillance) for protected EDG train rooms.

  PSEG Procedures FP-AA-008, "Hotwork" and FP-AA-002, "Impairments" Rev. 0] include controls for managing transient combustible loading and hot work. The Protected Equipment Program ensures that work activities are not normally allowed on the redundant EDG trains. Diesel building equipment operator rounds include verification of proper housekeeping conditions, and Fire Protection personnel inspect the EDG rooms approximately once per day. This compensatory measure is not credited in the EDG AOT risk evaluation.

Fire Compensatory Measures 1 and 3 are adequately subsumed within the compensatory measures listed in Attachment 4 of this submittal. Fire Compensatory Measures 2 and 4 are not credited in the EDG AOT risk evaluation.

The incremental risk (ΔCDF) associated with fire induced scenarios for the EDG A and B AOT extension is very small (<8% of the total calculated change). Therefore, additional compensatory measures directed solely at the fire sequences were not required in the final list of compensatory measures.

3. *The fire probabilistic risk assessment (PRA) portion of the risk analysis is based on the Individual Plant Examination of External Events (IPEEE) fire evaluation, which has been updated to reflect some new data and practices. However, the models have not been assessed against the industry consensus standards, and no formal peer review has apparently been done.*

3a. *Have there been any external reviews of the fire PRA since the IPEEE? If so, describe the scope and findings of the reviews and the resolution of the identified issues for this application.*

RESPONSE TO 3.a

No external reviews of the fire analysis have been performed since the IPEEE. The IPEEE fire analysis was reviewed by a Team from SAIC and Sandia for the NRC. The results of that review are documented in Technical Evaluation Report Hope Creek Revision 1 May 18, 1998 (USNRCJCN W6733).

As part of the continuing safety enhancements at Hope Creek, a new fire PRA is currently being evaluated to assess its capabilities.

3b. What internal reviews have been done to the fire PRA since the IPEEE? Similarly describe the scope and findings of the reviews and the resolution of the identified issues for this application.

RESPONSE TO 3.b

No internal reviews of the fire PRA analysis used in this submittal have been performed since the IPEEE. As part of the continuing safety enhancements at Hope Creek, a new fire PRA is currently being evaluated to assess its capabilities. This effort includes assessing MSOs, cable routing, and other equipment credited in the fire PRA. No significant changes in the assessed fire risk related to these evaluations have been identified. However, significant conservatisms associated with the fire PRA development project remain in both the fire PRA used for the EDG AOT risk evaluation and in the on-going fire PRA re-evaluation.

4. *The fire risk evaluation of the configuration of one EDG out of service has not been described in sufficient details in the application.*

4a. *It is stated that only fires which cause a loss of offsite power are relevant to this application. With one EDG out of service, increased risk would result from reliance upon the remaining operable safety train of equipment in the event that offsite power is lost to the electrical bus normally powered by the unavailable EDG (i.e., not necessarily a total loss of offsite power). This can occur from either a total loss of offsite power or a loss of offsite power to the one electrical bus. Are both of these scenarios captured in the fire PRA used for this application?*

RESPONSE TO 4.a

Scenarios involving either a total loss of offsite power (LOOP) or a loss of offsite power to one electrical bus are included in the fire PRA used for this application. A total loss of offsite power due to fire is possible for several compartments in the Turbine Building, Radwaste Area, and Control/Diesel Building and the yard because of the presence of offsite power bus bars or transformer protection relays.

There are several fire scenarios that lead to an initiating event and loss of a single AC Bus. Examples of such scenarios include fire in the Class 1E switchgear rooms which are quantified in the fire PRA model. In addition, loss of an electrical Division is also postulated and quantified in the fire PRA model. This is exemplified by the loss of Division I due to a fire in the electrical access room coincident with a LOOP.

In two of the diesel compartments (A and B), one of the two bus bar ducts is wrapped with a fire barrier for the postulated fire. Therefore, fires postulated in the A or B diesel compartment will not cause a loss of offsite power, but will cause loss of the diesel in the affected room, and the respective electrical bus.

4b. *As identified in Table 2-1 of Attachment 2 the supplemental dated May 28, 2010, fire scenarios may be screened below a threshold of 1E-6 per year core damage frequency (CDF). For a specific application like the analysis of risk for an EDG outage, some screened scenarios may become more significant. If screening of scenarios was performed for the baseline PRA, discuss the review of screened fire scenarios to assure that the configuration-specific risk is not underestimated.*

RESPONSE TO 4.b

Although a compartment was screened out if the screening core damage frequency (SCDF) for that compartment was less than 1E-06/yr, potentially risk significant compartments were identified for more detailed probabilistic safety assessment.

The 171 screened fire compartments were examined. Only one used a LOOP initiating event which was the cable raceway room on the 102' elevation of the Control/Diesel Building. This fire compartment had a screening core damage frequency (SCDF) of 7.90E-7/yr. based upon use of conservative screening assumptions (such as failing all components and cables within the compartment).

All screened compartments contribute no more than 0.1% to total fire screened core damage frequency (SCDF) and do not contribute more than 0.1% to fire SCDF involving loss of offsite AC power. Given the implementation of more realistic boundary conditions on the sole fire compartment (cable raceway room on 102' elevation of the Control/Diesel Building), this SCDF is expected to decrease by an order of magnitude when realistic boundary conditions are applied. Therefore, the screened scenarios (only one of which is LOOP related) are found to be not significant for the EDG AOT risk assessment.

4c. *Multiple spurious operations have been found to be potentially significant to fire risk, yet these are dispositioned for HCGS only by acknowledging that the treatment of this failure mode in the IPEEE was "rudimentary," and then stating that hot shorts were considered for specific systems only. For this application, how has the licensee assured that a more comprehensive treatment of multiple spurious operations, given the current state of knowledge, would not significantly impact the risk results for fire?*

RESPONSE TO 4.c

The HCGS Fire PRA includes Multiple Spurious Operations (MSOs) for the following:

For a fire in a location that might cause spurious operation of one or more SRVs, the highest screening conditional core damage probability (SCCDP) was assigned to the compartment during screening (HCGS IPEEE p. 4-14).

A review of other BWR fire PRA model MSO reviews and a review of the BWROG MSO items was performed for HCGS. Additional MSOs such as RHR LPCI flow diversion, MSIV fail to close, and HPCI/RCIC spurious start were evaluated by PSEG for HCGS and found to not significantly impact the results of the EDG AOT risk assessment. In most cases, those rooms associated with fire induced LOOP events or loss of off-site power to one electrical bus did not also involve the MSOs applicable to HCGS The rooms associated with loss of off-site power events that did involve MSOs applicable to HCGS were evaluated and determined to have a negligible impact on the EDG AOT risk evaluation. One notable example evaluated was the potential for a HPCI spurious start in three fire scenarios. A sensitivity analysis was performed using the EDG AOT application specific model where a HPCI MSO basic event was added to the model and assumed to fail HPCI, RCIC, and FW due to a RPV overfill condition with a probability of 1.0. Including the MSO event for spurious HPCI initiation resulted in a negligible change in delta CDF, delta LERF, ICCDP, and ICLERP and therefore had no impact on the EDG AOT risk evaluation.

Reference:

HCGS IPEEE: "Hope Creek Nuclear Station Individual Plant Examination for External Events," Public Service Electric and Gas Company, July 1997.

BWROG MSO Items: "BWROG Generic MSO List"

4d. *The submittal dated May 28, 2010, states that no credit is taken for any suppression. This seems to be unlikely, since it would mean that any fire precursor event would progress to a large engulfing fire. Clarify exactly how suppression is addressed in the fire PRA.*

RESPONSE TO 4.d

The submittal dated May 28, 2010 states in Table 2-1, under the line item "Fire Scenario Selection and Analysis" element, that fire suppression was assumed to fail, as well as manual fire suppression efforts and fire brigade response, with regard to fire damage evaluation for specific targets within a compartment. An analysis for fire suppression was performed as part of the HCGS IPEEE and concluded that active fire suppression would not occur in a timely manner such as to preclude damage to targets within a compartment in which the fire has been postulated. Therefore, since the fire suppression would not be effective in limiting the fire impacts to specific targets within a given compartment, no credit for active fire suppression is included in the HCGS EDG AOT fire risk analysis.

With regard to fire precursor event progression to a large engulfing fire, the HCGS Fire PRA model used for the EDG AOT risk assessment utilized the Fire-induced Vulnerability Evaluation (FIVE) methodology (EPRI, 1993b) to define compartments suitable for an efficient and accurate fire assessment of HCGS, accounting for the potential spread of damage owing to fire among rooms. The methodology for defining fire compartments is based on information in the HCGS IPEEE and was not changed for the HCGS Fire PRA model used for the EDG AOT risk assessment. A fire compartment interaction analysis (FCIA) was performed to establish the combinations of rooms that have boundaries which meet the FIVE criteria [EPRI, 1993b - Paragraph 5.3.6]. This reference lists six criteria suitable for defining a compartment boundary. In the HCGS study, if all boundaries of a location, often comprised of more than one room, met at least one of the six criteria, then the location was considered a fire compartment for purposes of the HCGS fire PRA analysis. One of the six FIVE criteria, which was applied in the HCGS FCIA, is "boundaries where automatic fire suppression is installed over combustibles in the exposing compartment on the basis that this will prevent fire spread to the adjacent compartment." Therefore, suppression was considered when establishing appropriate fire compartment boundaries for analysis. However, this consideration is part of the FIVE methodology, which is an NRC-approved quantitative screening technique for fire analysis.

A high hazard area analysis was performed as part of the IPEEE to consider the possibility of, and potential consequences of an extremely large fire, which by its intensity and duration might breach a fire barrier. The Diesel Generator rooms, among others, were considered high hazard areas due to a large quantity of combustibles normally contained within the rooms. A large fire scenario was postulated for each high hazard area to involve all of the fuel contained in the room and be uncontrolled by fire suppression or natural fire limiting phenomena (e.g., oxygen availability). Determination of the frequency of such a large, uncontrolled fire used the FIVE database to estimate the fire frequency and by using conservative estimates of the complete failure of

automatic fire suppression systems, manual fixed fire suppression systems, and fire brigade fire suppression efforts. The fundamental assumption in this analysis is that a large, uncontrolled fire, which can damage fire barriers and structures, can occur only if all fire suppression efforts fail. The possibility of a large fire initiated in the Diesel Generator rooms was included in the fire PRA analysis for this application.

Reference:

EPRI 1993b: Electric Power Research Institute, TR-100370, Revision 1, Fire Induced Vulnerability Evaluation (FIVE) Methodology, September 29, 1993.

HCGS IPEEE: "Hope Creek Nuclear Station Individual Plant Examination for External Events," Public Service Electric and Gas Company, July 1997.

4e. *It is not clear if recovery of offsite power following loss due to fire effects is being credited in the analysis. Clarify how the PRA addresses post-fire repairs and recovery of plant equipment and offsite power supplies.*

RESPONSE TO 4.e

The Hope Creek fire PRA does not credit any post-fire repair or recovery of plant equipment beyond that credited for the internal events PRA model.

In addition, the Hope Creek fire PRA does not credit recovery of offsite power or alignment of the Gas Turbine Generator for mitigating loss of offsite power due to fire effects.

4f. One critical aspect of fire PRA development involves the physical location of cables. One approach when the locations are mostly unknown employs an "exclusion" assumption, that cables are assumed to be located anywhere except where they are known not to be present. Some cable routing information may not be readily available, and assumptions as to the location of such cables may be made to simplify the data collection to support the PRA development. Are such assumptions employed in the HCGS PRA development? If so, describe and justify these assumptions, and characterize their significance to this specific application.

RESPONSE TO 4.f

Some cable location data was unknown and "exclusion" assumptions were made for the EDG AOT risk assessment. A fire compartment interaction analysis (FCIA) was performed for each fire compartment. The FCIA included a summary of contents of the compartment along with sources of this information (HCGS IPEEE p. 4-7). Cable locations were determined through a combination of information found in plant data management systems and cable drawings, as supplemented through walkdowns (HCGS IPEEE p. 4-18).

The lack of knowledge regarding BOP cable routing led to the assumption of a transient at least as severe as an MSIV closure for each compartment in the IPEEE. This assumption was made because of the lack of complete and precise knowledge of the cable inventory in each compartment. This lack of knowledge uncertainty, therefore, led to this highly conservative assumption. In general, cable inventories were known at the level of an electrical channel rather than component termination points.

The 2003 PRA update reviewed fire initiating events and system impacts in an effort to remove the overly conservative initiating event assignments made in the IPEEE. For example, in the HCGS IPEEE, a fire in the CRD area was modeled as an MSIV Closure, which is overly conservative. The 2003 PRA update modeled a fire in this area as a Turbine Trip. Use of this initiating event appropriately credits certain BOP equipment that was known to not be impacted by a fire in this area.

Reference:

HCGS IPEEE: "Hope Creek Nuclear Station Individual Plant Examination for External Events," Public Service Electric and Gas Company, July 1997.

4g. Describe any plant-specific features of the HCGS design related to detection, suppression, and mitigation of fires which are credited in the fire PRA. Examples of such items would be credit for water curtains, incipient detection, credit for prompt detection and/or suppression based on administrative controls, or other items that may be relevant to the risk analyses supporting this amendment request.

RESPONSE TO 4.g

Although the design and operation of HCGS includes fire detection and suppression equipment and procedures/programs, such as incipient detection and administrative controls for prompt detection and/or suppression, these were not credited in the HCGS fire PRA.

For initial screening of fire compartments, the probability of not extinguishing a fire from a source before damage to a component was set to 1.0.

The following describes the disposition of detection and fire suppression treatment for the EDG AOT fire risk assessment:

- There are no active fire doors at HCGS. All doors are normally closed unless a fire watch is posted.
- Automatic fire suppression systems, including CO_2, were not credited in the HCGS IPEEE fire analysis.
- Manual fire suppression (i.e., fire brigade) was not credited in the HCGS IPEEE fire analysis.
- No credit was taken for suppression of transient combustible fires.

4h. Describe how fire growth and propagation are treated in the HCGS fire PRA. Specifically identify and justify any assumptions applied, and any fire modeling and codes used.

RESPONSE TO 4.h

Introduction

A fire growth and propagation analysis was performed as part of the HCGS IPEEE to determine the probability of damaging a target without consideration of suppression and the probability of not extinguishing a fire before damage to a target.

The analyses for determining the probability of not extinguishing a fire before damage to a target concluded that active and manual fire suppression would not occur in time to prevent damage to a target. Therefore, active and manual fire suppression was not credited in the fire PRA. See the response to Item 4(g) for additional details.

The other assumptions and modeling approaches used are discussed below. This primarily relates to the determination of the probability of damaging a target.

Discussion

Four types of fire damage mechanisms are modeled: plume effects, ceiling jet effects, hot gas layer effects, and thermal radiation effects. Fire damage calculations are performed using a modified version of the formulation found in the Fire Screening Methodology User Guide, EPRI, 1993 - Attachment 10.4 (HCGS IPEEE p. 4-29). The FIVE fire damage formulation makes the following conservative assumptions and approximations which are also adopted in the HCGS fire analysis:

- Exposure fires instantly attain their peak intensities and remain there for the duration of the fire.
- Heat release rates (BTU/sec-ft^2) are associated with fully involved conditions.
- Targets respond with no delay to temperature changes in the surrounding environment.
- Heat loss to boundaries is 70% of the heat of the fire.
- Heat loss by convection in ventilated room fires is neglected.
- Plume and hot gas layer temperature effects are superimposed to determine if targets have been damaged.

With the exception of the diesel-generator rooms, liquid pool fires are modeled as unconfined because this maximizes the total heat release (BTU/sec) for a given heat generation flux (BTU/sec per ft^2 of pool surface). Spacing and drainage in the diesel generator room limits a liquid pool to approximately 100 ft^2.

The IPEEE fire walkdown did not find stored transient combustibles in excess of three gallons per container. Quantities of five gallons through 20 gallons are investigated in the IPEEE study depending on the compartment. Because the diesel-generators are sources for larger leaks, a variety of diesel fuel oil liquid pools up to 20 gallons is investigated for the diesel-generator rooms.

Cabinet fires are simulated by a fire located at the top of the cabinet with a heat release rate of 1233 BTU/sec which corresponds to a peak heat release rate for control cabinet fires. The analyzed trash can fire is 32 gallons using the maximum heat release rate found in FIVE. Pump fires are treated as unconfined liquid pool fires located at the elevation of the pump using a quantity of fuel that conservatively bounds the amount of lube oil in the pump (usually one or two gallons).

Two types of computations are modeled: steady state and pseudo-time dependent. The former assumes that the fire burns at the peak heat release rate of a material for infinite time (i.e., with no fuel consumption). The latter is an attempt, using a steady state formulation, to estimate the time to damage target materials versus the time that fire detection and suppression would occur. Fuel consumption is also included in that the fire is assumed to burn at the peak heat release rate until the fuel is completely consumed.

Steady state plume effects and ceiling jet effects are modeled using the equations and formulation of FIVE. Both of these conservatively add the heat available in the hot gas layer to either the plume or ceiling jet in order to determine if the target damage criterion has been exceeded. Steady state thermal radiation effects are modeled using FIVE also.

The pseudo-time dependent computations, which calculated the competition between fire damage time and fire suppression time are modeled consistent with FIVE. However, because of the limitations of the FIVE formulation, the following modifications are made to the FIVE Fire Screening Methodology in an attempt to insert slightly more realism into the model.

- The FIVE model resulted in unrealistically high plume and ceiling jet temperatures, far higher than the flame temperature of the source. Therefore, temperature of the ceiling jet and plume regions is limited to the typical hydrocarbon adiabatic limiting flame temperature which is approximately 2600°F [NFPA, 1995a - Page 1-86].
- When calculating the time to damage a target, the FIVE model does not include an estimate of the time that the fuel would be consumed by its own combustion. In the IPEEE report, this time is estimated from the total quantity of energy in the fuel (BTU) divided by the heat release rate of the fuel (BTU/sec).
- The FIVE model does not conserve energy and therefore overestimates the total energy released. In this work, total energy contained in the fuel, Qtotal (in BTU), is calculated from the specific heat release quantity of the fuel (BTU/lbm) and the postulated amount of fuel (e.g., five gallons). Physical constants of the fuel are either taken from the FIVE document, Marks Standard Handbook for Mechanical Engineers, or the Handbook of

Chemistry and Physics. Qtotal is conserved by adjusting the energy of the hot gas layer to equal Qtotal minus the energy in the plume minus the energy in the ceiling jet minus the energy in thermal radiation.

- FIVE uses the horizontal distance to the target to estimate thermal radiation effects. The actual line of sight distance is used in this model.

The modified formulation also led to a difference between how FIVE and the HCGS IPEEE fire analysis methodology use the input quantities. The HCGS IPEEE fire analysis methodology use of the quantities is described below:

- The fuel heat release rate, in BTU/sec per ft^2 of area, is used only in the calculation for total heat release rate (BTU/sec) by multiplying it by the area of the fire. The results are somewhat sensitive to the assumed BTU/sec per ft^2. An extensive set of sensitivity studies helped establish a reasonable heat release rate, which is 120 BTU/sec per ft^2.
- A fuel density was used to convert the volume of fuel (given in gallons) to the mass of fuel. The mass of fuel was used only to obtain Qtotal as described above.
- The specific area (ft^2/gal) of unconfined liquid pools is used to define the total heat release rate (BTU/sec) for unconfined fires. The specific area and the input volume of fuel defines the spill radius which, in turn, defines the extent of effect of the plume. The radius of influence of the plume is assumed to be proportional to the radius of the liquid pool. The specific area also influences the time for fuel consumption (called the burn out time) via the calculation of total heat release rate. An extensive set of sensitivity studies helped establish a reasonable specific area, which is 120 ft^2/gal.

Assumptions and Approximations

In addition to the assumptions contained within the FIVE methodology, the following additional assumptions are used in carrying out the calculations of fire damage in the HCGS IPEEE fire analysis:

- No credit was taken for cabling protected by conduit or enclosed cable trays.
- When determining damage to target cables from a specific source (in the absence of suppression), if any elevation of cable is calculated to be damaged, all of the cables are assumed to be damaged.

These additional assumptions are conservative.

Summary

The HCGS IPEEE fire modeling is a modified version of the FIVE methodology with additional conservative assumptions to determine the probability of damage to targets. In addition, the HCGS fire analysis uses the FIVE methods with slightly more realistic

modifications to some of the calculational schemes as described above. These modifications are justified in the IPEEE submittal.

Active and manual fire suppression methods are not credited. See the response to Item 4(g) for additional discussion.

References:

HCGS IPEEE: "Hope Creek Nuclear Station Individual Plant Examination for External Events," Public Service Electric and Gas Company, July 1997.

FIVE: EPRI, "Fire-Induced Vulnerability Evaluation (FIVE), "EPRI TR-100370, April 1992.

NFPA: National Fire Protection Association, "The SFPE Handbook of Fire Protection Engineering, Second Edition," June 1995.

4i. *(a) Fires occurring in the main control room, or other plant areas, which can lead to evacuation of the control room (including evacuation due to loss of functionality, not necessarily habitability, especially for ex-Control Room fires), have sometimes been conservatively modeled in fire PRAs. This can mask the risk importance of out-of-service equipment if such fires are conservatively assumed to be unmitigatable.*

(b) In addition, some plants only protect a single safety train of equipment for remote shutdown, so if a control room fire occurred during maintenance on that specific train of equipment, mitigation may not be available. It is assumed that a control room fire could cause a loss of power to a bus during the diesel generator outage. Identify and describe the impact of such fires on the configuration-specific risk analyses for the diesel generator outage configurations, addressing any conservatisms in assumptions, and impacts due to plant design of remote shutdown capability.

RESPONSE TO 4.i

(a) For fire scenarios that lead to evacuation of the control room, the Hope Creek PRA credits accident mitigation from the Remote Shutdown Panel (RSP). Operation from the RSP is directed by procedure HC.OP-IO.ZZ-0008(Q), "SHUTDOWN FROM OUTSIDE CONTROL ROOM". Failure of the operators to mitigate accidents from the RSP is modeled with a human error probability (HEP) of 6E-2 based on information from the Hope Creek IPEEE.

The fire analysis considers both full control room evacuation scenarios and smaller higher frequency fires that could impact single cabinets and therefore single trains of equipment.

(b) The RSP at Hope Creek includes instrumentation and controls for RCIC, RHR B (Suppression Pool Cooling (SPC) and Shutdown Cooling (SDC) modes), division B and D SRVs, and the associated loop B support systems (e.g., Safety Auxiliaries Cooling System loop B and Station Service Water loop B). If loop B equipment is unavailable from the RSP (e.g., EDG B failed or in maintenance), procedure HC.OP-IO.ZZ-0008(Q) provides direction for local operation of RHR A (SPC and SDC modes) for containment heat removal or RHR C and D (Low Pressure Coolant Injection (LPCI) mode) for low pressure inventory makeup. The Hope Creek PRA also credits a procedure for local manual containment venting.

Although only loop B equipment is available from the RSP, the available procedural direction and operator training allow credit for local operation of loop A mitigation systems. Therefore, both loop A and B equipment may be available for fire scenarios that lead to evacuation of the control room, and the modeling of operation from outside the control room (i.e., the RSP or local controls) does not adversely mask the importance of the diesel generator outage configurations.

5. *The submittal identifies that based on a 14-day weather forecast; the frequency of loss of offsite power (LOOP) due to severe weather is reduced by 75%. Given the uncertainty of weather forecasting over extended periods, and since the licensee does not preclude the use of the 14-day extended CT for unplanned repairs, this reduction in frequency could be introducing a non-conservative bias in the risk results.*

5a. *Identify the nominal LOOP frequency applied in the baseline PRA, and the reduced frequency used for this application, and describe how each of these frequencies were calculated. Justify the assumption of a 75% reduction in severe weather LOOP for a 14-day CT.*

RESPONSE TO 5.a

The nominal total LOOP initiating event frequency in the baseline Hope Creek PRA model is 2.37E-2/yr. The LOOP initiating event frequency is based on using the industry data in NUREG/CR-6890 and performing a Bayesian update with plant specific operating experience. The conditional probabilities and their corresponding individual causal LOOP frequencies are determined based on the NUREG/CR-6890 data and methods. The baseline LOOP frequency of 2.37E-2/yr is comprised of the four types of LOOP contributors as follows:

LOOP Causal Factors:	Frequency (Per/yr)
Plant Centered	2.24E-3/yr
Switchyard Centered	9.55E-3/yr
Grid Related	6.94E-3/yr
Weather Related	4.98E-3/yr
Total Nominal LOOP Frequency	2.37E-2/yr

For the 14-day EDG CT calculation, the Weather Related LOOP contribution is reduced by 75% as part of Compensatory Measure 4 (of Attachment 4 of this submittal) based on engineering judgment. The revised LOOP frequency used as part of Compensatory Measure 4 is 2.0E-2/yr and is comprised as follows:

LOOP Causal Factors:	Frequency (Per/yr)
Plant Centered	2.24E-3/yr
Switchyard Centered	9.55E-3/yr
Grid Related	6.94E-3/yr
Weather Related	4.98E-3/yr * 0.25 = 1.25E-3/yr
Total Compensatory Measure LOOP Frequency	2.0E-2/yr

Hope Creek procedures provide direction in the event of severe weather. Based on the extended weather forecasts, a 14-day EDG AOT would not be initiated during warnings related to severe weather conditions. Based on this information, the frequency of a Weather Related LOOP event during the 14-day EDG AOT would be much less than the nominal frequency used in the baseline Hope Creek PRA model.

Because entry into the 14 day AOT may be due to unplanned EDG failure or could occur in a planned EDG outage when weather forecasts fail to identify severe weather, the conditional probability of 0.25 that severe weather could still occur is included in the risk assessment for the change in risk.

This is judged to be an appropriate estimate.

Two sensitivity cases are performed with the severe weather to demonstrate the impact of this assumption:

- Probability of 1.0 that severe weather could still occur during the 14 day outage (i.e., 100% of nominal severe weather LOOP frequency from baseline Hope Creek PRA model).
- A conservative estimate that the probability of severe weather occurrence during the 14 day outage is 50% of that with no compensatory measure to plan the outage when severe weather is not expected and to verify that severe weather warnings are not present at the start of the AOT.

(For the results of the sensitivity cases see the response to RAI 5c.)

5b. *The offsite power recovery probability is directly dependent upon the cause of the loss of offsite power. Provide the baseline and analysis probabilities for offsite power recovery, and describe how the exclusion of 75% of the severe weather event frequency has been accounted for in the offsite power recovery probabilities.*

RESPONSE TO 5.b

The individual offsite power recovery events credited in the Hope Creek PRA model are provided in Table RAI-5b-1. The Hope Creek PRA model credits offsite power recovery based on the specific cause of the loss of offsite power (e.g., Plant Centered, Switchyard Centered, Grid Related, Weather Related). Consistent with the development of the LOOP initiating event frequency, the offsite power recovery probabilities are based on the industry data in NUREG/CR-6890. The offsite AC power recoveries are developed and used in the HCGS PRA model specifically tied to the LOOP causal event.

The frequency of loss of offsite AC power due to severe weather is reduced by 75% from 4.98E-3/yr to 1.25E-3/yr. (See the response to RAI 5a.) The conditional AC non-recovery probability for severe weather LOOP initiators is unchanged.

The offsite power recovery probabilities are specific to the type of LOOP initiating event (i.e., the offsite power recovery events are not a weighted average); therefore, the weather related recovery probabilities are not revised based on the exclusion of 75% of the weather related frequency as part of Compensatory Measure 4 (of Attachment 4 of this submittal).

The 75% reduction in the initiating event frequency for the severe weather initiating event reduces the severe weather frequency but the causal specific conditional probability for offsite AC recovery does not change.

Table RAI-5b-1

OFFSITE AC POWER NON-RECOVERY PROBABILITIES CREDITED IN HOPE CREEK PRA MODEL

Basic Event ID	Basic Event Description	Non-Recovery Probability
OSPR30MIN-PC	FAILURE TO RECOVER OSP WITHIN 30 MIN. (PLANT CENTERED LOOP EVENT)	4.79E-01
OSPR30MIN-SWYD	FAILURE TO RECOVER OSP WITHIN 30 MIN. (SWITCHYARD CENTERED LOOP EVENT)	5.95E-01
OSPR30MIN-GR	FAILURE TO RECOVER OSP WITHIN 30 MIN. (GRID RELATED LOOP EVENT)	8.25E-01
OSPR30MIN-SW	FAILURE TO RECOVER OSP WITHIN 30 MIN (WEATHER RELATED LOOP EVENT)	7.73E-01
OSPR4HR-PC	FAILURE TO RECOVER OSP WITHIN 4. 5 HRS (PLANT CENTERED LOOP EVENT)	4.03E-02
OSPR4HR-SWYD	FAILURE TO RECOVER OSP WITHIN 4. 5 HRS (SWITCHYARD CENTERED LOOP EVENT)	6.72E-02
OSPR4HR-GR	FAILURE TO RECOVER OSP WITHIN 4. 5 HRS (GRID RELATED LOOP EVENT)	1.32E-01
OSPR4HR-SW	FAILURE TO RECOVER OSP WITHIN 4.5 HRS (WEATHER RELATED EVENT)	3.61E-01
OSPR6HR-PC	FAILURE TO RECOVER OSP WITHIN 5.8 HOURS (PLANT CENTERED LOOP EVENT)	2.55E-02
OSPR6HR-SWYD	FAILURE TO RECOVER OSP WITHIN 5.8 HOURS (SWITCHYARD CENTERED LOOP EVENT)	4.40E-02
OSPR6HR-GR	FAILURE TO RECOVER OSP WITHIN 5.8 HOURS (GRID RELATED LOOP EVENT)	8.62E-02
OSPR6HR-SW	FAILURE TO RECOVER OSP WITHIN 5.8 HOURS (WEATHER RELATED LOOP EVENT)	3.14E-01
OSPR7HR-PC	FAILURE TO RECOVER OSP WITHIN 7 HRS (PLANT CENTERED LOOP EVENT)	1.78E-02
OSPR7HR-SWYD	FAILURE TO RECOVER OSP WITHIN 7 HRS (SWITCHYARD CENTERED LOOP EVENT)	3.14E-02
OSPR7HR-GR	FAILURE TO RECOVER OSP WITHIN 7 HRS (GRID RELATED LOOP EVENT)	6.10E-02
OSPR7HR-SW	FAILURE TO RECOVER OSP WITHIN 7 HRS (WEATHER RELATED LOOP EVENT)	2.80E-01
OSPR20HR-PC	FAILURE TO RECOVER OSP WITHIN 20 HRS (PLANT CENTERED LOOP EVENT)	1.76E-03
OSPR20HR-SWYD	FAILURE TO RECOVER OSP WITHIN 20 HRS (SWITCHYARD CENTERED LOOP EVENT)	3.51E-03
OSPR20HR-GR	FAILURE TO RECOVER OSP WITHIN 20 HRS (GRID RELATED LOOP EVENT)	5.66E-03
OSPR20HR-SW	FAILURE TO RECOVER OSP WITHIN 20 HRS (WEATHER RELATED LOOP EVENT)	1.33E-01

5c. *Provide a sensitivity analysis for the risk results if the nominal loss of offsite power frequency and recovery probabilities are retained for the configuration-specific risk evaluation.*

RESPONSE TO 5.c

Two sensitivity cases have been performed to retain the nominal loss of offsite power frequency and recovery probabilities (i.e., do not credit Compensatory Measure 4 (of Attachment 4 of this submittal)).

Note that as part of the RAI response, original Compensatory Measures 1 and 2 were subsumed by original Compensatory Measures 3 and 4. Therefore, original Compensatory Measures 3, 4, 5, and 6 have been renumbered (and revised) as Compensatory Measures 1, 2, 3, and 4, respectively, for the RAI response per Attachment 4 of this submittal.

The results for the sensitivity case to credit only Compensatory Measures 1 through 3 (of Attachment 4 of this submittal) are added to a reproduction of Table 3.4-5 of Attachment 4 to the March 29, 2010 LAR submittal (with the associated changes to reflect the revised compensatory measures). (See Table RAI-5c-1.) One of the two additional sensitivity cases shows that using the nominal loss of offsite power frequency (i.e., no credit for Compensatory Measure 4 (from Attachment 4) does not change the conclusions of the 14-day EDG AOT calculations.

The second sensitivity case shows the results if 50% probability of severe weather reduction is achieved by the Compensatory Measure 4 (from Attachment 4).

Figure RAI-5c-1 shows the change in risk metric ICCDP as a function of the degree of credit assigned to Compensatory Measure 4 (from Attachment 4), i.e., adequate planning of EDG AOT to avoid severe weather. As can be seen, the ICCDP is below the acceptance guideline without the Compensatory Measure 4 (0% credit). The Compensatory Measure 4 is considered a prudent action by PSEG and it will be implemented to minimize the probability of severe weather during the extended EDG AOT.

The changes in risk for both of the additional sensitivity cases related to credit for the reduction in the severe weather LOOP initiator remain within the risk acceptance guidelines in RG 1.174 and RG 1.177.

Table RAI-5c-1

QUANTITATIVE RESULTS OF THE RISK METRICS
FOR EDG A&B OOS WITH CONSIDERATION OF COMPENSATORY MEASURES
(PRA INCLUDES BOTH INTERNAL AND EXTERNAL EVENTS)

Case Description	ΔCDF (per yr)	ΔLERF (per yr)	ICCDP EDG A OOS	ICCDP EDG B OOS	ICLERP EDG A OOS	ICLERP EDG B OOS
Base Case (Gas Turbine removed from service)	3.86E-07	2.95E-08	2.38E-07	5.02E-07	1.35E-09	5.53E-08
Compensatory Measure 1 (of Attachment 4) Prevent Coincident Planned EDG Maintenance (A&C or B&D)	3.44E-07	2.36E-08	2.34E-07	4.26E-07	1.27E-09	4.41E-08
Compensatory Measure 2 (of Attachment 4) Prevent Coincident HPCI and RCIC Maintenance with EDG A or B OOS	3.54E-07	2.47E-08	2.26E-07	4.53E-07	6.54E-10	4.68E-08
Compensatory Measure 3 (of Attachment 4) Minimize Testing of Sensitive Equipment with EDG A or B OOS	3.80E-07	2.89E-08	2.34E-07	4.95E-07	1.04E-09	5.44E-08
Compensatory Measure 4 (of Attachment 4) Preclude entry into extended EDG AOT during Anticipated Severe Weather	2.66E-07	2.91E-08	1.15E-07	3.95E-07	9.61E-10	5.48E-08
Compensatory Measures 1-4 (of Attachment 4)	1.94E-07	1.81E-08	9.96E-08	2.72E-07	<1.00E-10	3.49E-08
Compensatory Measures 1-3 (of Attachment 4)	3.07E-07	1.84E-08	2.19E-07	3.71E-07	2.47E-10	3.51E-08
Compensatory Measures 1-4 (of Attachment 4) (50% credit for not entering 14 day AOT if severe weather)	2.31E-07	1.82E-08	1.38E-07	3.04E-07	<1.00E-10	3.49E-08

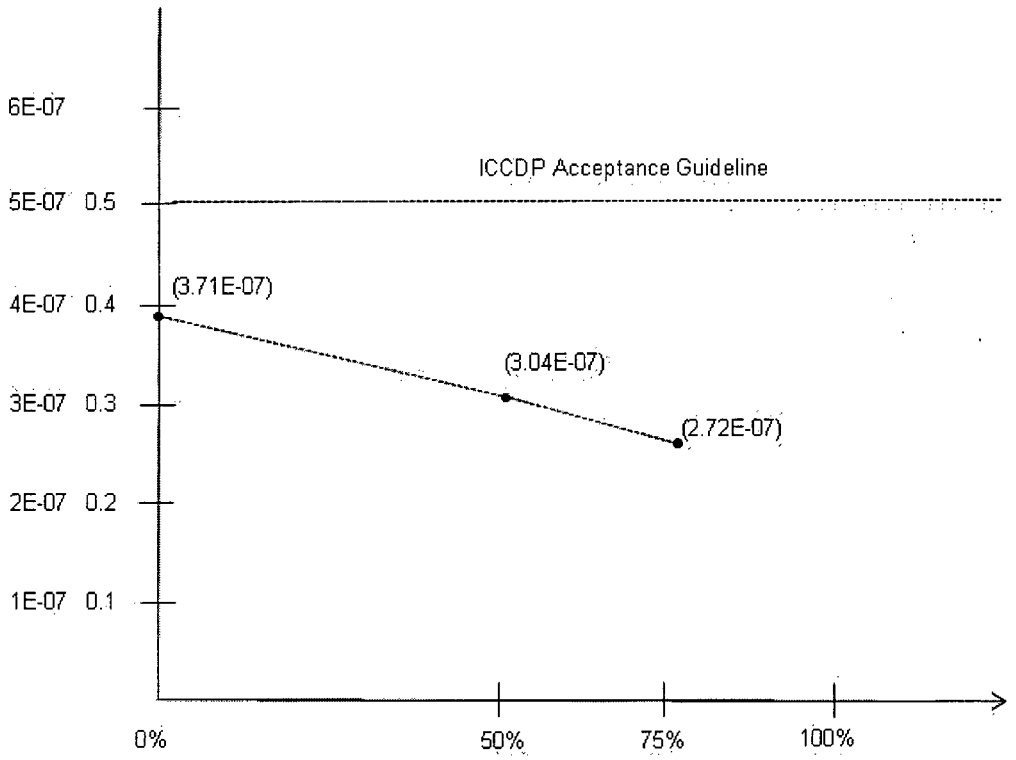

Fraction of Severe Weather Eliminated by Compensatory Measure

Figure RAI-5c-1: ICCDP as Function of Fraction of Severe Weather Eliminated by Compensatory Measure 4 (of Attachment 4 of this submittal)

6. *Given a LOOP and failure of EDGs (station blackout), describe the assumptions for equipment credited in the PRA internal events model for continued core cooling. Include in your response any operator actions necessary, assumptions on environmental conditions given a station blackout, water inventories and makeup sources, and mission times. Does the PRA assume that core damage can be prevented even if AC power is not restored, or is offsite power recovery or diesel generator repair necessary?*

RESPONSE TO 6

Given a LOOP and failure of EDGs (station blackout), the Hope Creek PRA model assumes that offsite power recovery or alignment of the Salem Gas Turbine Generator is necessary to prevent core damage for the 24 hour PRA mission time. This assumption may be conservative because Hope Creek has equipment and procedures for the following:

- Operator alignment of the portable power supply for long term HPCI, RCIC, and SRV control,
- Operator alignment of the diesel fire pump for late low pressure injection, and
- Local manual opening of containment vent valves.

These mitigation actions support long term core cooling and containment heat removal without the availability of offsite AC power.

There are mitigation measures that can be taken to extend the time before offsite AC power recovery must be achieved. These include the following considerations:

- Operator Actions
- Assumptions on environmental conditions
- Water inventories
- Makeup sources
- Mission times

Attachment 6-1 (provided below, as part of the Response to this Question 6) provides information from the Hope Creek PRA Event Tree Notebook to discuss the above considerations for coping during long term station blackout scenarios.

Note that the above operator actions and mitigation strategies are only applicable to the internal events PRA for crediting offsite AC power recovery.

Attachment 6-1

EXCERPT FROM HOPE CREEK LOSS OF OFFSITE POWER AND STATION BLACKOUT EVENT TREE NOTEBOOK

ATTACHMENT 6-1
LOSS OF OFFSITE POWER AND STATION BLACKOUT EVENT TREE NOTEBOOK

PLANT CONDITION IMPACTS

Time Line

For SBO sequences, there is a strong potential for complex, time varying system dependencies following a loss of offsite power and unavailability of emergency AC power. Therefore, time dependent AC power recoveries are used to evaluate the availability of key functional capabilities (i.e., coolant injection and containment heat removal) during the progression of events through the initial 24 hours following the LOOP initiating event. Figure 5-1 is a simplified time line describing the time phases used in constructing the LOOP event tree. Figure 5-1A supplements Figure 5-1 by providing additional detail on the limiting conditions.

Figures 5-1 and 5-1A also list some of the considerations or attributes associated with the time phases. While the list is not complete, it provides a simple way of looking at some of the key aspects of the time phases.

Figure 5-1A summarizes the duration of time that specific parameters or systems can be considered adequate to support a safe stable state. This figure shows that there are a myriad of issues that limit plant response to an SBO to less than 24 hours. The most limiting of the parameters or systems are as follows:

- DC power from 125V DC batteries with no load shed
- Proximity to pressure suppression pressure (PSP)
- Drywell temperature proximity to limit
- RCIC back pressure trip
- Torus temperature (HCTL)

The failure to run failure mode is calculated as a 24 hour mission time for all components with the following exceptions:

- The diesel generator has a 24 hour mission time but uses a surrogate 6 hour mission time to represent the impact of a 24 hour run time (see Component

Data Notebook (Appendix G) for the correspondence of this time with the convolution of run time and offsite AC power recovery assumed times).

- The battery life is estimated at 4 hours without chargers available, i.e., for SBO conditions. If the portable power supply to the chargers can be aligned, battery life itself is not limiting. However, containment conditions are calculated to eventually become unacceptable for continued operation of HPCI and RCIC in accordance with the EOPs within 8 hours based on MAAP calculations. Therefore, HPCI and RCIC are limited to operation at less than 8 hours for multiple phenomenological effects (See Section 5.2).
- HPCI and RCIC under SBO conditions are assessed for an 8 hour mission time despite the fact that certain SBO sequences credit times shorter than 8 hours for HPCI or RCIC successful operation.

The use of 24 hour run time for other components is consistent with the required mission time from the HCGS Success Criteria Notebook and the ASME PRA Standard and does not result in a substantial increase in the failure probability and therefore it is considered acceptable to incorporate this potentially slightly conservative assumption.

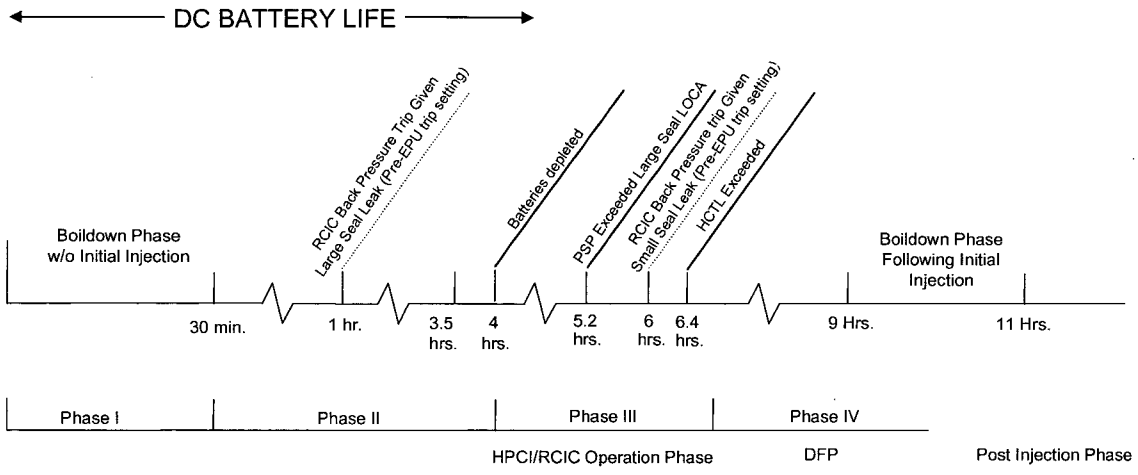

Phase	Description
I	0 - 30 min: Initial time phase that addresses possible boildown of RPV coolant inventory if no make-up is available and allowable time for AC power recovery prior to core damage.
II	30 min. - 4 hours: Effects of the SBO investigated for adverse impacts on success during this period where there is dependence on HPCI/RCIC operation: * High Drywell Temperature * Torus Temperature (above HCTL) * CST Inventory * High torus suction temperature * RCIC backpressure trip * High containment pressure (PSP) * Battery Capacity
III	4 hrs. – 6 hrs: There is a period of accident mitigation for the SBO that is dependent upon the ability to maintain HPCI and RCIC operability following the battery depletion. This time period beyond 4 hours (battery depletion) is dependent upon successful use of the portable power source for the battery chargers. If this is successful, HPCI or RCIC continued injection is possible if not otherwise limited by: * Size of Recirc seal LOCA * High DW temperature * PSP * Room cooling
IV	> 6 hours: The primary reason for this time phase limitation is exceeding HCTL or PSP and the requirement for emergency blowdown at approximately 6.4 hours leading to blowdown in the 6.4 hour time frame and possible core damage by 7.0 hours. Once the batteries deplete, continued adequate core cooling requires that the portable power supply for charging the batteries and the DFP are available and effective in providing a depressurized RPV and adequate RPV makeup.

Figure 5-1 Time Phases for SBO Event Sequences

Figure 5-1A Restrictions on HPCI/RCIC Success with No Other Mitigating Actions Included

Parameter or System	Condition	Time Line (Time to Reach a "Limit")
DC	Batteries	0 — 4.0 Hrs.
	Portable Power Supply	→
PSP[2]	with No Leak (HC07004C)[1]	20 Hrs.
	w/12.5 gpm Leak[3]	~13 Hrs.
	w/120 gpm Leak (HC07008CX)	5.2 Hrs.[4]
DW/T[2]	with No Leak (HC07004A)[1]	~24 Hrs.
	w/12.5 gpm Leak (HC07007)[3]	~24 Hrs.
	w/120 gpm Leak (HC07008CX)	11.6 Hrs.
Torus Temp. (HCTL)	No Torus Cooling HC07007x (initial T=85°F)	4 Hrs. ~160°F — 6.4 Hrs. T/T >HCTL
RCIC Back Pressure (44 psig in DW)	with No Leak (HC07004A)	~24 Hrs.
	w/12.5 gpm Leak (HC07007)	Not Limiting
	w/120 gpm Leak (HC07007C)	Not Limiting

(1) 24 hour operation requires torus cooling.

(2) Requires emergency depressurization based on proximity to PSP or DW/T limit curves (~340°F).

(3) 24 hour operation with a small recirc seal leak requires SPC and DW sprays.

(4) With RCIC operation, the time to reaching the PSP limit curve is extended slightly to 5.6 hrs.

Potential plant conditions that may limit system operability during an extended SBO event need to be addressed to determine what AC power recovery time is reasonable to include in the probabilistic assessment. The possible limitations and impacts include the following:

Possible Limitation	SBO Impact
Drywell Temperature exceeds design Limit 340°F	RPV emergency depressurization required; this causes low steam pressure to HPCI/RCIC.
Torus temperature exceeds HCTL (~185°F at 1000 psig)	RPV emergency depressurization required; this causes low steam pressure to HPCI/RCIC.
Torus temperature exceeds acceptable values for HPCI/RCIC operation with suction from the torus	If CST source is unavailable, the torus source may be relied upon. This is a higher temperature (less limiting) than the HCTL effect discussed above.
Containment pressure exceeds PSP	PSP requires emergency depressurization at approximately 28 psig in the drywell; this causes low steam pressure to HPCI/RCIC.
RCIC high turbine exhaust pressure trip	RCIC will trip on high exhaust pressure trip (setpoint 50 psig or approximately 44 psig in the DW)[1]
Battery life is exceeded	Control of HPCI, RCIC, and SRVs is unavailable from the control room unless portable power supply is aligned for charging support.
CST Volume is exhausted (CST volume is nominally 300,000 gal.)	HPCI/RCIC must be operated with suction from the torus. This may cause failure due to high suction temperature.

(1) One of the physical restrictions on RCIC operation is the high turbine exhaust pressure trip. This trip setting at HCGS was 25 psig for the pre-EPU plant. This translates into a containment pressure of approximately 19 to 20 psig. Under certain degraded accident conditions where RCIC operation can be beneficial this trip setpoint could be exceeded. As part of the EPU implementation, PSEG has increased the RCIC trip set point to 50 psig in the fall of 2007. This translates into a containment pressure of approximately 44 psig. This is well above the Pressure Suppression Pressure (PSP) at which emergency depressurization is directed. Therefore, there are no longer any identified accident sequences in the HCGS PRA for which the RCIC high turbine exhaust pressure trip is limiting.

Possible Limitation	SBO Impact
HPCI/RCIC room temperatures	Potential premature isolation or failure of the HPCI/RCIC equipment. Lack of AC power causes the loss of active room cooling. HPCI and RCIC operation could be compromised under certain conditions. (Not limiting for SBO unless there is gland seal failure)
Control Room Temperature	Adverse equipment or personnel habitability effects could result inside the Control Room.
RPV Water Level	The RPV fuel zone water level instruments are powered by essential buses. Under SBO conditions, RPV level indication is available.
Compressed Gas Operation	The 14 Target Rock SRVs have accumulators that would be relied upon for SBO sequences.
Diesel Fire Pump	DFP effectiveness considered limited in current model.
Recirculation Pump Seal LOCA	Seal LOCA reduces time available for crew response. This is explicitly treated probabilistically in the CAFTA model and the effects are reflected in the deterministic MAAP calculations.

HCGS has performed a number of deterministic analyses in support of the Station Blackout Coping Assessment as part of the response to the NRC SBO Rule. The following discussion summarizes some of the technical analyses used by PSEG in the SBO Coping Analysis and analyses developed here using MAAP to support analysis beyond the 4 hour coping period in these assessments.

PSEG has developed an extensive library of deterministic calculations using MAAP 4.0.4 and MAAP 4.0.6. These calculation sets are both performed at the EPU power level of 120% of OLTP. The Level 1 analyses has shown that either set of calculations provide accurate information regarding primary system and containment response.

Therefore, the following discussions will use both sets of MAAP calculations interchangeably to describe the limitations on plant response to LOOP and SBO conditions.

DW Temperature and Torus Temperature

As noted in Section 2 and in the Success Criteria Notebook, there are a number of heat removal systems available for HCGS. These include the following:

- Torus Heat Removal
  - RHR in suppression pool cooling
  - RHR in drywell spray mode
- Shutdown Cooling
  - RHR heat removal from the RPV directly
- Containment Vent
  - Both heat removal and containment pressure control.
- Drywell Coolers
  - DW coolers are used principally for DW temperature control. Their capacity is too small to act as the sole containment heat removal method to prevent overpressurization.

High drywell temperature may arise in the primary containment equipment areas (drywell, wetwell) as a result of the loss of drywell coolers due to the loss of offsite power. The heat transfer from process steam lines and the reactor vessels contribute heat to the containment drywell and have been analyzed for the thermal transient resulting from a station blackout. Temperatures are acceptable, i.e., well below the 340°F DW temperature "limit". (MAAP Case IB-LI-5, HC07006A, HC07007C, HC07007D, HC07007E, HC07007F, and HC07008C)

The drywell temperature is acceptable for the following conditions:

- 24 hours of HPCI or RCIC operation with SPC operating and no significant recirc seal leak
- Greater than the time available for the SBO conditions even with a small or large recirc seal leaks

Additionally, it is expected that containment torus conditions would not approach the HCTL within the limiting time frame which would require the operating crew to reduce the potential challenge to containment integrity by depressurizing the RPV. However, should the operating crew decide to perform an emergency depressurization of the RPV without regard for the operating ECCS, the turbine driven systems could be rendered inoperable, potentially causing core damage if the operators were subsequently unable to restore coolant inventory using the DFP or RCIC with the low pressure trip bypassed.

Plant specific MAAP analyses indicate the following:

- Drywell Temperature remains below 340°F for an extended time even including (1) the RPV remaining at pressure, (2) an SRV discharging to the torus, and (3) 120 gpm leakage from the RPV to the drywell.
- The suppression pool temperature remains below the HCTL if the RPV is slowly depressurized during the initial 4 hours.

See MAAP Cases IB-LI-5, HC07006A, HC07007C, HC07007D, HC07007E, HC07007F, and HC07008C.

Containment Pressure

Limiting Conditions for SBO

High containment pressure may arise from LOCA, recirculation pump seal LOCA, or loss of DHR. There could be adverse impacts on HPCI and RCIC due to high containment pressure and required RPV depressurization on PSP.

The EOP for containment control specifies that emergency RPV depressurization is required if the containment pressure exceeds the Pressure Suppression Pressure (PSP). The PSP curve for HCGS has a safe region below approximately 28 psig. Pressures above 28 psig in containment could occur under certain conditions of recirculation pump seal LOCAs.

The containment pressure is calculated using MAAP to exceed the PSP at approximately 8 hours into the event if a large recirculation pump seal LOCA occurs. This means that this parameter could be limiting in the assessment of the possible core damage sequences without any AC power. (MAAP Case HC07008CX using MAAP 4.0.6 [IB-LI-5] resulting in approximately

5.8 hours.) This limitation is further discussed under HPCI/RCIC operability in the individual nodal event tree discussions.

5.2.3.2 Non-Limiting Conditions for SBO

High containment pressure may also lead to automatic RCIC turbine trip due to high turbine exhaust pressure and Target Rock SRV reclosure (not an issue within 8 hours).

- The revised RCIC high back pressure turbine trip as a result of an EPU modification (50 psig) is no longer limiting for the SBO for sequences.
- Target Rock SRV reclosure occurs at differential pressure of approximately 20 psig. (N_2 gas pressure - containment pressure). The pneumatic supply pressure = 90 psig.
- The required differential pressure to keep SRVs open = 20 psid per system engineer input from Target Rock. This is utilized in MAAP for relief valve logic. When SRVs are manually open and RPV pressure drops to within 20 psi of containment pressure, the SRVs are modeled to close. This value is modeled in MAAP and will cause manually open relief valves to close and prevent reopening even manually above this containment pressure.

<u>Battery Life</u>

DC availability to support RPV inventory makeup can be provided by batteries or a portable power supply to the chargers.

PSEG has developed a procedure and the associated hardware to allow a portable power supply to be used to provide power to the 125V DC and 250V DC chargers. This procedure and hardware allow for extending the availability of DC power beyond 4 hours despite an SBO. Without the use of the portable power supply to the chargers, battery depletion would result in inadequate instrumentation and control power for turbine driven systems. The model accounts for initial battery failure and battery depletion at 4 hours if no chargers (AC power) are available. The minimum battery life for the four 125 VDC divisions is derived from PSEG design estimates. This may be slightly conservative and increase the importance of the crew action to align the portable power supply for the chargers.

DC Load Shed

There are DC load shed actions specified in the HCGS procedures, however, the actions are taken ostensibly to reduce heat loads in various compartments and not to preserve DC power. The HCGS coping time of 4 hours is met without the need for the DC load shed actions.

It is also noted that no analyses are available from HCGS to support extending the DC battery life of any of the critical batteries beyond 4 hours, except for the use of the portable power supply and alignment of chargers.

CST Volume

The nominal CST volume is adequate (~300,000 gal.) to support RCIC or HPCI injection for 24 hours approximately 130,000 gal. are required for the 4 hour SBO required mission time to meet the SBO rule. Therefore, there is more than adequate water supply for the 4 hour coping time for the SBO event.

HPCI/RCIC Room Temperature

High room temperatures in the Reactor Building can cause the trip of turbine driven systems (i.e., steam line break logic) or extreme environmental stress on critical components under SBO conditions.

The steam tunnel equipment area contains steam process lines which contribute heat and therefore has been analyzed for the thermal transient resulting from a station blackout. High steam tunnel temperature occurs in the SBO and causes MSIV closure. HPCI/RCIC operation is not adversely impacted because no HPCI or RCIC temperature indicators are located in the steam tunnel.

Nevertheless, the HPCI and RCIC systems isolation within the rooms and pipe chase due to steam line break logic may be challenged under SBO conditions and therefore these temperature isolations should be bypassed if the isolation temperature is reached within a time phase.

The HPCI equipment area (HPCI room) contains steam driven and DC energized equipment and therefore has been analyzed for the thermal transient resulting from a station blackout.

HPCI operability over the 24 hour mission time does not require room cooling (which is dependent on AC power), except if a gland seal system failure has occurred. (See Dependency Notebook and HPCI System Notebook.) Under SBO conditions and no gland seal failure, the SBO evaluation by PSEG supports operability of HPCI for 4 hours without AC power. This operability does require bypassing the high room temperature trip setpoint at 160°F. Therefore, a crew action is required for success of the HPCI system without room cooling and without a gland seal failure. This is extrapolated to 8 hours using survivability envelopes from NUMARC 87-00. Therefore, the SBO sequences are quantified using the HPCI fault tree representative of an 8 hour operation and mission time. HPCI operation does not include dependence on the fan or room cooler for operation during SBO/LOOP sequences for 8 hours without AC power when there is no gland seal failure.

The RCIC equipment area (RCIC room) contains steam driven and DC energized equipment and therefore has been analyzed for the thermal transient resulting from a station blackout. RCIC room cooling is required for the 24 hour mission time only if a coincident gland seal failure occurs. (See Dependency Notebook and RCIC System Notebook.)

Bypass of the temperature trips is directed by Hope Creek procedures.

Under SBO conditions, there are design calculations (GR-0022) that support the operability of the HPCI and RCIC equipment over a 4 hour coping time. These calculations can be summarized as follows:

> The steam line piping is routed through a number of rooms. These rooms are oriented 180 degrees away from the steam tunnel. The calculations for rooms 4110 (RCIC) and 4111 (HPCI) in GR-0022 include any steam piping and turbine exhaust piping routed within the room.
>
> The calculated temperature rise over 4 hours using a conservative number of cycles and temperatures is found in Calc GR-022. The results are as follows:

CONSERVATIVE SBO TEMPERATURES FOR RX BUILDING
(CALC NO. GR-0022)

System	Room	Temp °F	Exposure	Isolation Temp.	Not Failure[1]
RCIC	4110	147	4 hrs.	160°F	<150°F
HPCI	4111	174	4 hrs.	160°F	<180°F to 200°F

(1) NUMARC 87-00.

SBO mitigation is described in HC.OP-AB.ZZ-0135 and listed in UFSAR Table 13.5.2.

HPCI/RCIC are designed to isolate in the event of a high-energy line break (HELB) in the respective compartments. An isolation trip setpoint of 160°F ambient room temperature for rooms 4110 and 4111 is used at HCGS. SBO temperatures may exceed the trip setpoint and inadvertently isolate the system during SBO. Per HC.OP-AB.ZZ-0135, operators take steps to bypass the HPCI/RCIC high ambient temperature isolation logic before room temperatures exceed the isolation setpoints (Step 4.5.10). Thus, the resulting SBO temperatures will not have an adverse impact on the way in which HPCI/RCIC design functions are performed or controlled if the steam line temperature isolation is bypassed.

System	Gland Seal Leakage	Mission Time (Hrs)	Room Cooling Required (Alternatively SPC)	Adequate w/No Room Cooling
HPCI	Yes	24	Failed	No
	Yes	8	Failed	No
	Yes	4	Failed	No
HPCI	No	24	No	Yes
	No	8	No	Yes
	No	4	No	Yes
RCIC	Yes	24	Failed	No
	Yes	8	Failed	No
	Yes	4	Failed	No
RCIC	No	24	No	Yes
	No	8	No	Yes
	No	4	No	Yes

The EPU implementation included a series of GE Task Reports. The one evaluating SBO (GE-NE-0000-0005-6467-01 Task 903) concluded that loss of ventilation during the SBO coping period of 4 hours does not prevent functioning of coping equipment.

Compressed Gas Operation

Certain equipment items required for safe shutdown are operated by compressed air/nitrogen. Hope Creek does not have DC energized compressors to supply this equipment. Therefore, system accumulators are a source of stored compressed air/nitrogen of sufficient capacity to operate the compressed air/nitrogen operated equipment necessary to bring and maintain the plant in safe shutdown for a station blackout event. Accumulator dependent equipment identified by procedures or operational requirements shall be activated by the accumulators and operate within their design limits.

The RCIC system does not require any air operated equipment. All air operated valves fail in the required position for continued RCIC system operation.

The HPCI system does not require any air operated equipment.

The SRVs have a high success probability over the initial 24 hours because the SRV accumulators are sufficient to support SRV operation over this timeframe. The 14 Target Rock SRVs each have an accumulator. The total number of actuations available is approximately 42 to 70. The basis for this is documented in the SRV system notebook.

Control Room Effects

During a station blackout event, heat will be added to the control room as a result of operating personnel activities and equipment powered from uninterruptible AC sources and DC sources. It is conservatively assumed that all energy expended within the control room is converted to heat and contributes to the heat rise. Complete loss of cooling to these areas under SBO conditions can be addressed by opening doors and removing ceiling tiles according to procedure HC.OP-AB.ZZ-135. This is proceduralized. If at least one diesel-generator of Division 1 or 2 starts, in response to a loss of offsite power, it is possible to power a train of

control room ventilation. The design calculation for the SBO coping time of 4 hours shows adequate control room temperatures. If no EDGs start and room heat up locks are shed or dealt with, then the event tree path followed provides success if AC power is recovered within 20 hr (given success of the portable power source for a battery charger).

The EPU implementation included a series of GE Task Reports. The one evaluating SBO (GE-NE-0000-0005-6467-01 Task 903) concluded that loss of ventilation during the SBO coping period of 4 hours does not prevent functioning of coping equipment.

Therefore control room heat-up is not considered limiting in the SBO or LOOP assessment.

High Temperature in Switchgear Room

The essential switchgear equipment area contains DC energized equipment which contributes heat and has been analyzed for the thermal transient resulting from a station blackout.

Essential AC equipment (switchgear, battery chargers, motor control centers, transformers, etc.) required for recovery will operate at temperatures exceeding 115°F (ref. NUREG/CR-4942, NUMARC 87-00 App. F). Automatic fire suppression systems are not utilized in the essential switchgear areas. The switchgear rooms are adequate for more than 4 hours without any cooling or crew actions. Procedures direct additional mitigation action if necessary. This includes opening doors and use of portable fans if feasible. Under SBO conditions, these rooms will have little or no heat load.

The EPU implementation included a series of GE Task Reports. The one evaluating SBO (GE-NE-0000-0005-6467-01 Task 903) concluded that loss of ventilation during the SBO coping period of 4 hours does not prevent functioning of coping equipment.

Diesel Fire Pump

The diesel-powered fire pump (DFP) injection source could be viable as long as the RPV can remain completely depressurized. However, several conditions can compromise this makeup source:

- SRVs can only depressurize the RPV to 50 to 90 psig which restricts the maximum DFP flow to the RPV
- Battery depletion
- Containment pressurization
- Elevation head required to reach the RPV may be large enough to reduce flow to less than adequate
- Alignment would be required under adverse conditions

When the batteries deplete, the SRVs can no longer remain open and the RPV will repressurize. Inventory will be discharged via the SRVs at high RPV pressure as a result of decay heat.

However, with the portable power supply for AC power to the chargers, DC power remains available indefinitely and the DFP remains a viable method of RPV injection until the SRVs reclose due to high containment pressure unless containment venting can be implemented.

MAAP HC07007F demonstrates the adequacy of the DFP flow to the RPV after approximately 4 hours.

The time before SRVs reclose is approximately 20 hours [HC07005, HC07018]. Therefore, there is at least 20 hours available for AC power recovery when the following are available and effective:

- Portable power supply for battery charging
- DFP for RPV injection

Recirculation Pump Seal LOCA

A failure of the recirculation pump seals induced in both pumps due to a loss of RACS and break down of the seals could result in adverse DW environment (pressure and temperature) that could limit HPCI and RCIC viability. The recirculation pump seal leak has two critical parameters that can influence the accident sequence:

- The time at which a seal leak develops
- The magnitude of the seal leak

In general, analyses have imposed the conservative assessment that the seal leak is initiated at the time of the SBO. (This is judged to be conservative and realistically could be delayed by several hours.)

The magnitude of the seal leak is judged to generally be quite small for the latest design recirculation pump seals. However, there remains a probability of a large seal leak and this is probabilistically included in the model. (See Appendix G of the Component Data Notebook.)

Supplemental Information (as discussed in Attachment 1)

- PSEG Calculation E-9, Standby Class 1E Diesel Generator Sizing, Revision 8
- PSEG drawing 601701 S 1000 – 33, Salem / Hope Creek Generating Station 500, 13.8, 4 KV Elementary One Line.
- Salem No. 1 and No. 2 Units Generators & Main Transformers One Line Control Diagram 203000 S 8789-53
- HCGS Single Line Diagram E-0001-0 (Q)

FORM 1
Page 3 of 3
(Page 1 and 2 contain the instructions)

CALCULATION COVER SHEET

Page 1 of 8

CALCULATION NUMBER.: E-9(Q) **REVISION:** 8

TITLE: Standby Class 1E Diesel Generator Sizing

 # SHTS (CALC): 8 **#ATT/#SHTS:** 9/~~86~~ 77 **#IDV/50.59 SHTS:** 3/3 **#TOTAL SHTS:** ~~95~~ 91 8/27/04

CHECK ONE:

☒ FINAL ☐ INTERIM (Proposed Plant Change) ☐ VOID

☐ FINAL (Future Confirmation Req'd, enter tracking Notification number:) _____

SALEM OR HOPE CREEK: ☐ Q – LIST ☒ IMPORTANT TO SAFETY ☐ NON-SAFETY RELATED

HOPE CREEK ONLY: ☒Q ☐Qs ☐Qsh ☐F ☐R

☐ ARE STATION PROCEDURES IMPACTED? YES ☐ NO ☒

IF "YES", INTERFACE WITH THE SYSTEM ENGINEER & PROCEDURE SPONSOR. ALL IMPACTED PROCEDURES SHOULD BE IDENTIFIED IN A SECTION IN THE CALCULATION BODY [CRCA 70038194-0280]. INCLUDE AN SAP OPERATION FOR UPDATE AND LIST THE SAP ORDERS HERE AND WITHIN THE BODY OF THIS CALCULATION.

☐ CP and ADs/CDs INCORPORATED (IF ANY): **See Page 2 of this Calculation**

DESCRIPTION OF CALCULATION REVISION (If applicable.):

See page 2 of this Calculation

PURPOSE:

See page 3 of this Calculation

CONCLUSIONS:

See Page 7 of this Calculation

	Printed Name / Signature	Date
ORIGINATOR/COMPANY NAME:	Saeed Savar/Seconded	8/23/04
REVIEWER/COMPANY NAME:	N/A	
VERIFIER/COMPANY NAME:	LAMIS Fleischer	8/24/04
CONTRACTOR SUPERVISOR (If applicable)	N/A	
PSEG SUPERVISOR APPROVAL: (Always required)	TM Cook for K. Fleischer	8-26-04

USER RESPONSIBLE FOR VERIFYING REVISION, STATUS AND CHANGES

Revision History

Rev. No. 8
Summary of changes:

1. Incorporated the following outstanding CDs:

ECA #	CD #	Discipline	Rev. #
80003623	E502	Electrical	0
80003631	E502	Electrical	0

2. The reference page, revision history page and the page containing note #4 were partially re-typed.

3. General changes were incorporated to improve the format and consistency with the current calculation procedure.

Revision No. 7:
Summary of Changes:

1. Following CD's: 4H-0377/E507/0 and 4H-0330/E509. These changes only affect Table 7, MOV Load on SDG's
2. Comments from 10CFR50.54 review, breaker rating was used for several Heat Tracing Panels (note 26)
3. Uses actual conversion formula from HP to KW rather than a 0.8 factor.
4. The entire calculation was reformatted in Excel. Rev. 6 was a hand calculation.
5. Incorporated Engineering Evaluation H-1-KJ-EEE-1270, Rev. 0
6. Added MDE-01-016 Maximum Motor Loading For LOCA and LOP for CS, RHR SACS, SSWS Pumps
7. Added SDG loading summary table 8.

USER RESPONSIBLE FOR VERIFYING REVISION, STATUS AND CHANGES

Section	**Page**
1.0 Objective	4
2.0 Plant Layout	4
3.0 Design Basis	5
4.0 Summary Of Loading	5
5.0 Notes	6
6.0 Conclusions	7
7.0 References	8
Attachments	
Attachment 1 – Table - SDG Load Assignments	~~9~~ 8 pages
Attachment 2 - Table - All SDGs In Service	12 pages
Attachment 3 - Table - SDG 'A' Off Line	12 pages
Attachment 4 - Table - SDG 'B' Off Line	~~12~~ 10 pages
Attachment 5 - Table - SDG 'C' Off Line	12 pages
Attachment 6 - Table - SDG 'D' Off Line	12 pages
Attachment 7 - Table - MOV Loads On SDG 'A'	3 pages
Attachment 8 - Table - Summary of SDG Loading	1 page
Attachment 9 - MDE-01-016 Maximum Motor Loading For LOCA and LOP for CS, RHR SACS, SSWS Pumps	7 pages

USER RESPONSIBLE FOR VERIFYING REVISION, STATUS AND CHANGES

1.0 PURPOSE:

The purpose of this calculation is to demonstrate that during and following a Design Basis Accident (DBA) the steady state and maximum loading of each Standby Diesel Generator (SDG) at any time does not exceed its continuous rating.

2.0 PLANT LAYOUT:

2.1 The Hope Creek plant has four 4.16KV engineering safeguard system (Class 1E) buses
2.2 Each SDG is connected thru breakers to the 4.16KV bus of each class 1E channel.
2.3 Each Class 1E bus also has two separate offsite power sources connected to it by breakers. The normal configuration is shown on Fig. 1.

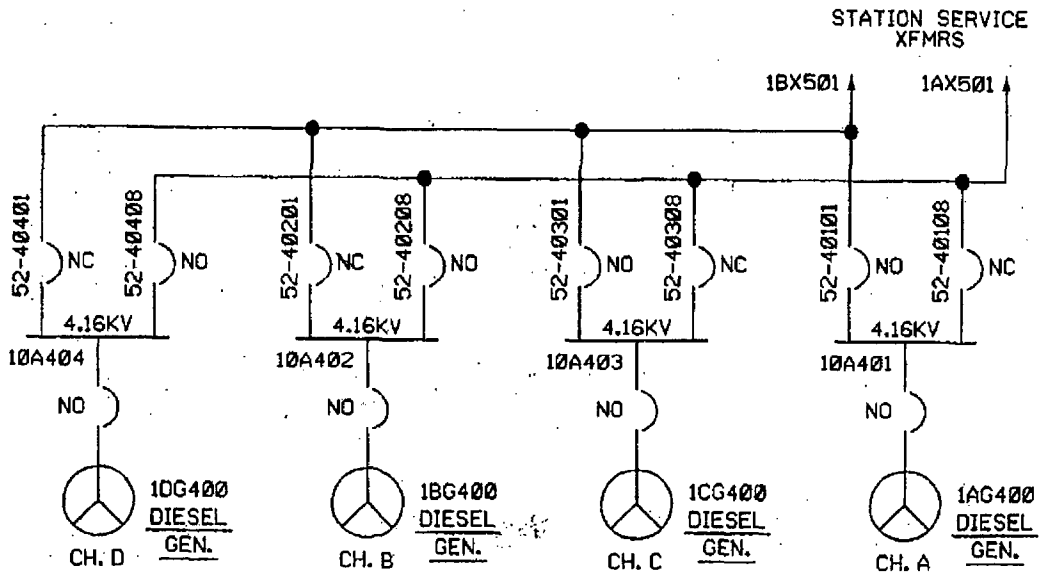

FIG. 1
ESF 4.16KV BUSES

USER RESPONSIBLE FOR VERIFYING REVISION, STATUS AND CHANGES

3.0 DESIGN BASIS

3.1 The SDG must be capable of automatic starting, reaching full speed, rated voltage and frequency within 10 seconds after receipt of start signal.

3.2 The SDG must be able to shutdown the plant under the following conditions:

3.2.1 Loss of offsite power (LOP) with three of the four SDGs available.

3.2.2 Design Basis Accident (DBA) with three of the four SDGs available. DBA is defined as loss of offsite power concurrent with a loss of coolant accident (LOCA).

3.3 Equipment required to shutdown the plant under the conditions stated in paragraph 3.2 is allocated between the four SDGs such that a safe shutdown is assured with any three of the four SDGs in operation. The load allocation is shown in Attachment 1.

4.0 SUMMARY OF LOADING

4.1 Demands in KW on each SDG are tabulated in Attachments 2 through 6.

4.2 The following conditions are considered in calculating load demands of the SDGs:

4.2.1 Attachment 2 shows loading conditions of the four SDGs for the situation in which all four SDGs are in service.
4.2.2 Attachment 3 shows loading when SDG "A" is not available, and SDGs "B", "C" and "D" are available.
4.2.3 Attachment 4 shows loading when SDG "B" is not available, and SDGs "A", "C" and "D" are available.
4.2.4 Attachment 5 shows loading when SDG "C" is not available, and SDGs "A", "B" and "D" are available.
4.2.5 Attachment 6 shows loading when SDG "D" is not available, and SDGs "A", "B" and "C" are available.
4.2.6 Attachment 7 shows the MOV loading
4.2.7 Attachment 8 is a summary of Attachments 2 through 8

5.0 NOTES

5.1 An inspection of Attachment 1 Table shows that LOP loading of SDGs is bounded by the DBA loading, Therefore only DBA loading calculations are shown in Tables in Attachments 2 through 6.

5.2 All loads in the 0-10 minute period are automatically applied. Additional loads are energized manually after 10 minutes in accordance with Attachment 1 Table requirements.

USER RESPONSIBLE FOR VERIFYING REVISION, STATUS AND CHANGES

5.3 Non-Class 1E loads are tripped by the LOCA signal and may be manually applied after 0-10 minute period as permitted by the available capacity of the SDG and in accordance with Attachment 1 Table requirements.

5.4 Class 1E loads may also be tripped manually, if their continued operation is not necessary.

5.5 The kilo-watt (KW) values shown in Attachment 1 Table have been derived using the accepted electrical conversion formula using horsepower (HP) and efficiency (EFF), KW = HP x 0.746/EFF.

5.6 The power factor (PF) values shown in Attachments 2 – 6 Tables, for motors rated greater than 250 HP, was input from calculation E- 1.1(Q), sheet 12, (Ref. 7.4).

5.7 The power factor (PF) values shown in Attachments 2 – 6 Tables, for motors rated 250HP or less, was input from calculation E-1.1(Q), sheet 5, assumption 12 , (Reference 7.4).

5.8 Power factor used for the battery chargers are assumed to be typical based on the similarity of the equipment. The typical power factor was calculated by the following for battery charger 1A-D413:

- Rated output 200A at 132 V DC
- Rated input 56A at 480 V, 3PH, AC
- Charger efficiency at 100% load = 0.875

WATTS_Out = (200)*(132)= 26400 W
WATTS_In = 26400/0.875= 30171 W
VA_In = $(56)*(480)*(3)^{1/2}$ = 46558 VA
PF = 30171/46558=<u>0.648</u>

5.9 Power factor used for MOVs is assumed at 0.4 based on a review of MOV operating characteristic curves.

5.10 Power factor of essential lighting, is assumed at 0.9. The lighting installed included incandescent, fluorescent, high pressure sodium and mercury vapor. The lowest power factor per manufacturer cut sheets of the types installed is 0.9.

5.11 Essential lighting loads are taken at 100% of the MCC breaker rating feeding the panel.

5.12 Hydrogen recombiners PF is assumed to be 0.85 instead of 1.0 because of combination of the induction motor blower and the resistive heating elements.

5.13 The kilo-var (KVAR) values shown in Tables 2 - 6 were derived from the formula;

$$KVAR = TAN\ \{COS^{-1}\ (PF)\} * KW$$

USER RESPONSIBLE FOR VERIFYING REVISION, STATUS AND CHANGES

5.14 The SDG KVA is derived from the formula;

$$KVA = (KW^2 + KVAR^2)^{1/2}$$

5.15 The SDG power factor (PF) is derived by the formula;

$$PF = KW/KVA$$

5.16 The load for various heat tracing panels was considered as the VA rating of the transformer feeding the heat tracing.

6.0 CONCLUSION

Calculations reveal that the maximum loading of each of the four SDGs at any time for conditions stated in paragraph 3.2.2 is within the SDG rating as follows:

RATING	KW	KVAR	PF	KVA
Continuous	4430	~3323	0.8	5538
2000 hr	4737	3553	0.8	5921
2 hr	4873	3655	0.8	6091
30 minute	5316	3987	0.8	6645

A summary of results is presented in Table in Attachment 8.

Margin

Hope Creek UFSAR Section 8.3.1.1.3 states that each SDG is rated at 4430 kw for continuous operation and at 4873 kw for 2 hours of short time operation in any 24 hours. Regulatory Guide 1.9 provides guidance on selection of SDG during the plant construction and states that it should have a continuous load rating equal to conservatively estimated loads plus a 10 to 15 percent margin. IEEE-387 identifies this margin value at 10 percent. Attachment 8 of this calculation provides a summary of each standby diesel generator loading. It demonstrates that the maximum loading of the diesels remains within the 10 percent above each SDG continuous rating. 8

The changes incorporated Revision 8 are only to include the maximum stroke time (84 seconds) of MOVs associated with the SACS crosstie valves for inlet and outlet to Spent Fuel Pool System heat exchangers. The stroke time for these valves is changed from 62 seconds to 84 seconds as the result of replacement valves being of a different design. The specialty review performed as part of the Design Change Package concluded that the change does not affect the previously analyzed loading and the established margin with respect to the standby diesel generators sizing. 8

USER RESPONSIBLE FOR VERIFYING REVISION, STATUS AND CHANGES

Impact on Procedure and Calculations

The change in the valve stroke time was evaluated for impact on the Inservice Testing and Valve Program governing procedures as part of the specialty review during the DCPs 80003631 and 80003623 review and approval.

Calculations (E-1.1, E-4.1, E-5.1, and E-6.1) identified in the reference section of this calculation are input to this calculation and were reviewed for impact due to the changes incorporated by this revision. The review concluded that there are no impacts. Mechanical calculation JE-0015, diesel fuel oil storage tank is an output calculation. The changes implemented by this revision will not impact calculation JE-0015. 8

7.0 REFERENCES

7.1 IEEE std. 308-1978. Criteria for class 1E power systems for nuclear power generating stations.
7.2 NRC regulatory guide 1.9, Rev. 2, 1979. Selection, design and qualification of diesel - generator units used as standby (onsite) electric power systems at nuclear power plants.
7.3 ANSI/IEEE std. 387-1977. Criteria for diesel - generator units applied as standby power supplies for nuclear power generating stations.
7.4 Calculation E-1.1(Q), Short Circuit Studies of 13.8KV, 7.2KV and 4.16KV systems
7.5 HCVD PM018Q-0499 Vol. 1, Rev. 19, Operation and Maintenance Manual for Emergency Diesel Generator.
7.6 Calculation 4.1(Q), Class 1E 125V DC Station Battery and Charger Sizing.
7.7 Calculation JE-0015, Diesel Generator Fuel Oil Tank Sizing
7.8 Calc E-5.1(Q), Class 1E 250 VDC Station Battery and Charger Sizing.
7.9 Calc E-6.1, Non Class 1E 250/125 VDC System Station Battery and Charger Sizing
7.10 E-0001-0 (Q) Rev.17 HCGS Single Line Diagram (station)

USER RESPONSIBLE FOR VERIFYING REVISION, STATUS AND CHANGES

USER RESPONSIBLE FOR VERIFYING REVISION, STATUS AND CHANGES

			Component Data			CHNL "A"		CHNL "C"		CHNL "B"		CHNL "D"		DBA (Note 13)		LOP (Note 13)	
Item No.	DESCRIPTION	Equipment No.	HP	Eff	Operating KW (note 5)	Number Connect	Operating KW	Number Connect	Operating KW	Number Connect	Operating KW	Number Connect	Operating KW	Minimum Req'd.	Time	Minimum Req'd.	Time
	CLASS 1E LOADS																
1	REACTOR CORE SPRAY PUMPS (Note 8)	1A,B,C,D-P206	655	0.930	525.41	1	525.41	1	525.41	1	525.41	1	525.41	3	19 s (6)		
2	RHR PUMPS (Note 8)	1A,B:C:D-P202	1250	0.930	1002.69	1	1002.69	1	1002.69	1	1002.69	1	1002.69	3	13s (6)	1	11 min
3	SAFETY AUX. CLG. SYS. PUMPS (Note 8)	1A,B,C D-P210	530	0.940	420.62	1	420.62	1	420.62	1	420.62	1	420.62	3	45 s	2	45 s
4	CORE SPRAY PMP. RM. CLR. UNIT	1A THRU 1H-VH211	15	0.920	12.16	2	24.33	2	24.33	2	24.33	2	24.33	3	40 s		
5	MOTOR OPERATED VALVES	SEE NOTE 4	SET		14.81	1	14.81	1	14.81	1	14.81	1	14.81	sets	13 s	sets	13 s
6	SWGR. RM. UNIT CLR. FANS	1A,B,C,D-VH401	25	0.920	20.27	1	20.27	1	20.27	1	20.27	1	20.27	3	65 s	3	65 s
7	INTAKE STRUCTURE SUPPLY FANS	1A,B,C,D-V503	40	0.920	32.43	1	32.43	1	32.43	1	32.43	1	32.43	2	13s (29)	2	13s (29)
8	INTAKE STRUCTURE TRAVELING SCREENS AREA FANS	0A-V558, 0B-V558	7.5	0.920	6.08	1	6.08			1	6.08		0.00	1	65 s	1	65 s
9	RHR PUMP RM UNIT COOLER FANS	1A THRU 1H-VH210	20	0.920	16.22	2	32.43	2	32.43	2	32.43	2	32.43	3	40 s	1	11 min
10	RCIC PUMP RM. UNIT COOLERS	1A, B-VH208	5	0.920	4.05					2	8.11			1	65 s	1	65 s
11	HPCI PUMP RM UNIT COOLERS	1A, B-VH209	15	0.920	12.16	2	24.33							1	65 s	1	65 s
12	125-V DC BATTERY CHARGERS	1A, B, C, D413			37.95	2	75.90	3	113.85	2	75.90	3	113.85	8	13 s	8	13 s
	SEE NOTE 17	1A, B, C, D414															
	* SEE NOTE 22 FOR MINIMUM REQ'D	1CD, DD-444															
13	DIESEL AREA BATTERY ROOM EXHAUST FANS	1A, B, C, D-V406	1	0.920	0.81	1	0.81	1	0.81	1	0.81	1	0.81	3	13 s	3	13 s
14	DIESEL FUEL OIL TRANSFER PUMPS	1A THRU 1H-P401	5	0.920	4.05	2	8.11	2	8.11	2	8.11	2	8.11	3	>60 min	3	>60 min
15	STATION SERVICE WATER PUMPS (Note 8)	1A, B, D, C-P502	800	0.941	634.22	1	634.22	1	634.22	1	634.22	1	634.22	3	55 s	3	55 s
16	RB FRVS RECIRCULATION SYSTEM FANS	1A THRU 1F-V213	150	0.920	121.63	2	243.26	1	121.63	2	243.26	1	121.63	4	19s,30s (7)	-	-
17	CONTROL RM SUPPLY FANS	1A, 1B-VH403	40	0.920	32.43		0.00	1	32.43		0.00	1	32.43	1	30 s	1	30 s
18	208Y/120-V AC XFMRS TO POWER DIST PANELS	10X201, 202, 203, 204	see note 25		37.50	4	37.50	4	37.50	4	37.50	4	37.50	12	13 s	12	13 s
		10X411, 412, 413, 414															
		10X421, 422, 423, 424															
		10X501, 502, 503, 504															
19	RESERVED FOR FUTURE USE																
20	INTAKE STRUCTURE EXHAUST FANS	1A, B, C, D-V504	40	0.920	32.43	1	32.43	1	32.43	1	32.43	1	32.43	2	13s (29)	2	13s (29)
21	CONTROL ROOM CHILLED WATER CIRCULATING PUMPS	1A, 1B-P400	60	0.920	48.65			1	48.65			1	48.65	1	65 s	1	65 s
22	CNTRL RM SUPPLY UNIT HTG COILS	1A, 1B-VH403			90.00			1	90.00			1	90.00	1	60 s	1	60 s
23	CONTROL ROOM WATER CHILLERS (Note 10)	1A, 1B-K400	680	0.925	506.00			1	506.00			1	506.00	1	110s (28)	1	110s (28)
24	DIESEL GEN RM RECIRC SYSTEMS FANS	1A THRU 1H-V412	125	0.920	101.36	2	202.72	2	202.72	2	202.72	2	202.72	3	30s (9)	3	30 s
25	PRIMARY CONTAINMENT INSTRUMENT GAS COMPRESSORS	1A, 1B-K202	15	0.920	12.16			1	12.16			1	12.16	1	30 min	1	30 min
26	BATTERY CHARGERS, 250-V DC	10D423 10D433	NOTE 18		19.00	1	19.00		0.00	1	19.00		0.00	2	13 s	2	13 s
27	CONTROL AREA BATTERY ROOM EXHAUST FANS	1A, 1B-V410	5	0.920	4.05			1	4.05			1	4.05	1	60 s	1	60 s
28	RB FRVS RECIRC UNIT HEATING COILS	1A THRU 1F-VH213			100.00	2	200.00	1	100.00	2	200.00	1	100.00	4	19s, 30s (7)	-	-
29	TRAVELING SCREEN SPRAY WATER BOOSTER PUMPS	1A, B, C, D-P507	20	0.920	16.22	1	16.22	1	16.22	1	16.22	1	16.22	3	55 s	3	55 s
30	RB FRVS VENT UNIT HEATING COILS	1A, 1B-VH206			32.00	1	32.00		0.00	1	32.00		0.00	1	19 s	-	-
31	CONTROL ROOM SUPPLY SYSTEM RETURN FANS	1A, 1B-V415	30	0.920	24.33			1	24.33			1	24.33	1	30 s	1	30 s
32	CONTROL ROOM EMERGENCY FILTER FANS	1A, 1B-VH400	25	0.920	20.27			1	20.27			1	20.27	1	30 s	1	30 s

USER RESPONSIBLE FOR VERIFYING REVISION, STATUS AND CHANGES

			Component Data			CHNL "A"		CHNL "C"		CHNL "B"		CHNL "D"		DBA (Note 13)		LOP (Note 13)	
Item No.	DESCRIPTION	Equipment No.	HP	Eff.	Operating KW (note 5)	Number Connect	Operating KW	Number Connect	Operating KW	Number Connect	Operating KW	Number Connect	Operating KW	Minimum Req'd.	Time	Minimum Req'd.	Time
33	SAFETY AUX COOLING SYSTEM UNIT COOLERS	1A, B, C, D-VH214	7.50	0.920	6.08			2	12.16			2	12.16	2	45 s	2	45 s
34	FUEL POOL COOLING PUMPS	1A, 1B-P211	75	0.920	60.82	1	60.82		0.00	1	60.82		0.00	1	61 min	1	61 min
35	CONTROL ROOM EMERGENCY FILTER UNIT ELECTRIC HEATING COILS	1A, 1B-V400			13.00			1	13.00			1	13.00	1	30 s	1	30 s
36	CONTROL EQUIPMENT ROOM AIR SUPPLY FANS	1A, 1B-VH407	250	0.920	202.72			1	202.72			1	202.72	1	70 s	1	70 s
37	RB FRVS VENT SYS FANS	1A, 1B-V206	25	0.920	20.27	1	20.27		0.00	1	20.27		0.00	1	19 s	-	-
38	CONTAINMENT HYDROGEN RECOMBINER SYSTEM	1A, 1B-S205			140.00	1	140.00		0.00			1	140.00	1	24 h	-	-
39	CONTROL EQIP ROOM SUPPLY UNIT HEATING COILS	1A, 1B-VH407			100.00		0.00	1	100.00			1	100.00	1	70 s	1	70 s
40	SERVICE WATER SELF-CLEANING STRAINERS	1A, B, C, D-F509	1	0.920	0.81	1	0.81	1	0.81	1	0.81	1	0.81	3	55 s	3	55s
41	STANDBY LIQUID CONTROL PUMPS	1A, 1B-P208	40	0.920	32.43	1	32.43			1	32.43			2	-	2	13 s (15)
42	RESERVED FOR FUTURE USE																
43	RESERVED FOR FUTURE USE																
44	RESERVED FOR FUTURE USE																
45	RESERVED FOR FUTURE USE																
46	480 V POWER SUPPLY TO CLASS 1E CHILLER PANELS	1A, 1B-C488, 1A, 1B-C491			4.00	1	4.00	1	4.00	1	4.00	1	4.00	2	13 s	1	13 s
47	TRAVELING SCREENS	1A, 1B, 1C, 1D-S501	5	0.920	4.05	1	4.05	1	4.05	1	4.05	1	4.05	3	55 s	3	55 s
48	ECCS JOCKEY PUMPS	1A, 1B, 1C, 1D-P228	10	0.920	8.11	1	8.11	1	8.11	1	8.11	1	8.11	3	13 s	3	13 s
49	MOTOR DRIVEN DIESEL GENERATOR FUEL OIL STANDBY PUMPS	1A, 1B, 1C, 1D-P402	2	0.920	1.62	1	1.62	1	1.62	1	1.62	1	1.62	3	13 s	3	13 s
50	STANDBY LIQUID CONTROL PUMP ROOM DUCT HEATERS	1A, 1B-VE261			45.00	1	45.00		0.00			1	45.00	1	15 min	1	15 min
51	480 V POWER SUPPLY TO HYDROGEN AND OXYGEN ANALYZER PANELS	1A-C200, 1B-C200			1.00	1	1.00		0.00	1	1.00		0.00	1	13 s	1	13 s
52	250 V DC BATTERY ROOM DUCT HEATERS	10-VE418			10.00	1	10.00		0.00				0.00	1	13 s	1	13 s
53	125 V DC DIESEL AREA BATTERY ROOM DUCT HEATERS	1A, 1B, 1C, 1D-VE420			21.00	1	21.00	1	21.00	1	21.00	1	21.00	3	13 s	1	13 s
54	HPCI PUMP ROOM DUCT HEATER	10-VE260			11.00	1	11.00		0.00				0.00	1	13 s	1	13 s
55	RCIC PUMP ROOM DUCT HEATER	10-VE259			7.00		0.00		0.00	1	7.00		0.00	1	13 s	1	13 s
56	250 V DC BATTERY ROOM DUCT HEATER	10-VE417			8.00		0.00		0.00	1	8.00		0.00	1	13 s	1	13 s
57	CLASS 1E PANEL ROOM WATER CHILLERS	1A, 1B-K403 (16)	430 (16)	0.925	198.00	1	198.00		0.00	1	198.00		0.00	1	125s (28)	1	125s (28)
58	CLASS 1E PANEL ROOM CHILLED WATER PUMPS	1A, 1B-P414	40	0.920	32.43	1	32.43		0.00	1	32.43		0.00	1	75 s	1	75 s
59	CLASS 1E PANEL ROOM SUPPLY & RETURN AIR FANS	1A, 1B-VH408	75	0.920	60.82	1	60.82		0.00	1	60.82		0.00	1	80 s	1	80 s
60	CLASS 1E PANEL ROOM ELECTRIC HEATERS	1A, 1B-VH408			100.00	1	100.00		0.00	1	100.00		0.00	1	80 s	1	80 s
61	BATTERY ROOM EXHAUST FANS	1A, 1B-V416	1	0.920	0.81	1	0.81		0.00	1	0.81		0.00	1	60 s	1	60 s
62	BATTERY ROOM DUCT HEATERS	1A, 1B-VE423			14.00		0.00	1	14.00			1	14.00	2	13 s	2	13 s
63	H_2/O_2 ANALYZER HEAT TRACING PANELS	1CC200, 1DC200			15.00		0.00	1	15.00			1	15.00	1	13 s	1	13 s
64	RESERVED FOR FUTURE USE																
65	RESERVED FOR FUTURE USE																
66	RESERVED FOR FUTURE USE																

			Component Data			CHNL "A"		CHNL "C"		CHNL "B"		CHNL "D"		DBA (Note 13)		LOP (Note 13)	
Item No.	DESCRIPTION	Equipment No.	HP	Eff	Operating KW (note 5)	Number Connect	Operating KW	Number Connect	Operating KW	Number Connect	Operating KW	Number Connect	Operating KW	Minimum Req'd.	Time	Minimum Req'd.	Time
67	RESERVED FOR FUTURE USE																
68	RESERVED FOR FUTURE USE																
69	RESERVED FOR FUTURE USE																
70	RESERVED FOR FUTURE USE																
	NON-CLASS 1E LOADS																
	See Note 11																
71	TURBINE GENERATOR TURNING GEAR OIL PUMP	10-P111	40	0.920	32.00					1	32.00		0.00	1	10 min	1	10 min
72	STANDBY LIQUID CONTROL SOLUTION OPERATING HEATER	10-E276			10.00	1	10.00		0.00		0.00		0.00	1	10 min	1	10 min
73	DRYWELL COOLING UNIT FANS	1A1-THRU 1H1-V212 1A2- THRU 1H2-V212	20	0.920	16.22	8	129.74		0.00	8	129.74		0.00	-	-	8	13 s
74	RADWASTE EXHAUST FANS	0A(B,C)-V305	100	0.920	81.09	1	81.09	1	81.09	1	81.09		0.00	-	-	3	14 min
75	ESSENTIAL PLANT LIGHTING	00L311, 10L111, 10L211, 10L411	Notes 21 & 23		52.40	1	52.40	1	93.50	1	37.40	1	93.50	2	10 min	2	13 s
76	CRD WATER PUMPS	1A, 1B-P207	250	0.920	202.72		0.00	1	202.72		0.00	1	202.72	1	11 min	1	16 min
77	TURBINE BUILDING BATTERY ROOM EXHAUST FANS	1A, 1B-V138	3	0.920	2.43	1	2.43		0.00	1	2.43		0.00	1	10 min	1	13 s
78	TURBINE GENERATOR AUX BEARING LIFT PUMPS 9 - 5HP EACH AND	1A THRU 1J-P110	45	0.920	36.49		0.00		0.00	1	85.14		0.00	1	40 min	1	40 min
	TURNING GEAR - 60 HP	10G-110	60	0.920	48.65		0.00		0.00		0.00		0.00				
79	EMERGENCY INSTRUMENT AIR COMPRESSOR	10-K100	150	0.920	121.63	1	121.63		0.00		0.00		0.00	-	-	1	20 min
80	RADWASTE SUPPLY FANS	OA-V316, OB-V316	100	0.920	81.09		0.00	1	81.09		0.00	1	81.09	-	-	2	14 min
81	REACTOR BUILDING SUPPLY AIR HANDLING UNITS	1A, 1B, 1C-VH300	150	0.920	121.63	1	121.63	1	121.63		0.00	1	121.63	-	-	2	19 s
82	REACTOR BUILDING EXHAUST FANS	1A, 1B, 1C-V301	200	0.920	162.17	1	162.17		0.00	1	162.17	1	162.17	-	-	2	19 s
83	RADWASTE TANK VENT FILTER FANS	0A-V306, 0B-V306	7.50	0.920	6.08	1	6.08		0.00	1	6.08		0.00	1	61 min	1	14 min
84	TURBINE BUILDING BATTERY ROOM SUPPLY FANS	1A, 1B-VI37	5	0.920	4.05	1	4.05		0.00	1	4.05		0.00	1	10 min	1	13 s
85	RADWASTE TANK VENT FILTER HEATING COILS	0A, 0B-VH306			3.60	1	3.60		0.00	1	3.60		0.00	1	61 min	1	14 min
86	CHEMICAL LAB EXHAUST FANS	0A, 0B-V307	20	0.920	16.22	1	16.22		0.00	1	16.22		0.00	1	120 min	1	11 min
87	DIESEL GENERATOR STARTING AIR COMPRESSORS	1A- THRU 1D-K402	15	0.920	12.16	1	12.16	1	12.16	1	12.16	1	12.16	3	11 min	3	11 min
88	REACTOR AUX COOLING SYSTEM PUMPS	1A, 1B-P209	150	0.920	121.63	1	121.63		0.00	1	121.63		0.00	-	-	1	85 s
89	125-V DC BATTERY CHARGERS	1A1(2), 1B1(2)-D473	Notes 19	0.800	57.00	2	114.00		0.00	2	114.00		0.00	1	10 min	2	13 s
90	125-V DC BATTERY CHARGERS	1A1(2), 1B1(2)-D474	Notes 17	0.800	38.00	1	38.00	1	38.00	1	38.00	1	38.00	4	10 min	4	13 s
91	250-V DC BATTERY CHARGERS	10D143	Notes 20	0.800	57.00		0.00		0.00	1	57.00		0.00	1	10 min	1	13 s
92	STANDBY LIQUID CONTROL SOL MIXING HEATER	10-E277			40.00		0.00		0.00		0.00	1	40.00	1	10 min	1	10 min
93	RFPT AUX LUBE OIL PUMP (NOTE 12) &	1A, 1B, 1C-1(2)P124	25	0.920	20.27	1	20.27	1	20.27	1	20.27		0.00	3	15 min	3	15 min
	TURNING GEAR MOTORS	1A, 1B, 1C-S100	1.50	0.920	1.22	1	1.22	1	1.22	1	1.22		0.00	3	15 min	3	15 min
94	RESERVED FOR FUTURE USE						0.00		0.00		0.00		0.00				
95	208 V/120 V AC XFMRS TO DIST PANELS	10X205,206,207,208			30.00	2	60.00	2	60.00	1	30.00	1	30.00	3	10 min	3	13 s

			Component Data			CHNL "A"		CHNL "C"		CHNL "B"		CHNL "D"		DBA (Note 13)		LOP (Note 13)	
Item No.	DESCRIPTION	Equipment No.	HP	Eff	Operating KW (note 5)	Number Connect	Operating KW	Number Connect	Operating KW	Number Connect	Operating KW	Number Connect	Operating KW	Minimum Req'd.	Time	Minimum Req'd.	Time
		10X419,213															
96	REACTOR BUILDING FLOOR DRAIN SUMP PUMPS	1A, 1B, 1C, 1D-P265	5	0.920	4.05		0.00	2	8.11		0.00	2	8.11	2	10 min	2	13 s
97	DRYWELL EQUIP DRAIN SUMP PUMPS	1A, 1B-P267	5	0.920	4.05	1	4.05		0.00	1	4.05		0.00	-	-	2	13 s
98	DRYWELL FLOOR DRAIN SUMP PUMPS	1C, 1D-P267	5	0.920	4.05	1	4.05		0.00	1	4.05		0.00	-	-	1	13 s
99	POWER SUPPLY FOR UNIT VENT RADIATION MONITORING SYSTEMS	1AS929, 1BS929			3.50	1	3.50	1	3.50	1	3.50		0.00	1	10 min	1	13 s
100	POWER SUPPLY FOR DLD RADIATION MONITORING SYSTEMS	10S935			3.50		0.00	1	3.50		0.00		0.00	1	10 min	1	13 s
101	TURBINE GENERATOR MAIN SEAL OIL PUMP	10-P173	20	0.920	16.22		0.00		0.00	1	16.22		0.00	1	55 min	1	55 min
102	TURBINE GENERATOR RECIRC SEAL OIL PUMP	10-P171	7.50	0.920	6.08		0.00		0.00	1	6.08		0.00	1	55 min	1	55 min
103	TURBINE GENERATOR SEAL OIL VACUUM PUMP	1OP 172	3	0.920	2.43		0.00		0.00	1	2.43		0.00	1	55 min	1	55 min
104	RAWASTE ± 24V DC BATTERY ROOM DUCT HEATER	OO-VE313			5.00	1	5.00		0.00		0.00		0.00	-	-	1	14 min
105	CONDENSATE STORAGE TANK HEAT TRACING (SEE NOTE 26)	1OC284			12.00		0.00	1	12.00		0.00		0.00	1	10 min	1	13 s
106	TSC SUPPLY SYSTEM FAN	OVH 314			20.00		0.00	1	20.00		0.00		0.00	1	15 min	1	15 min
107	TSC SUPPLY SYSTEM HEATING COIL	OVH 314			30.00		0.00	1	30.00		0.00		0.00	1	15 min	1	15 min
108	TSC EMERGENCY FILTER FAN	OOV 314			20.00		0.00	1	20.00		0.00		0.00	1	15 min	1	15 min
109	TSC EMERGENCY FILTER HTG COIL	OVH 313			13.00		0.00	1	13.00		0.00		0.00	1	15 min	1	15 min
110	STEAM TUNNEL UNIT COOLERS	1A, 1B-V216			16.00		0.00		0.00	1	16.00	1	16.00	-	-	1	10 min
111	TURBINE BUILDING BATTERY ROOM SUPPLY FAN & HTG COIL	10VE132			50.00	1	50.00		0.00		0.00		0.00	1	10 min	1	13 s
112	TURBINE BUILDING COMPARTMENT EXHAUST FANS	10V106, 10V109					0.00		0.00		0.00		0.00	-	-	1	>10 min
113	CONTROL AREA 125 V DC BATTERY ROOM DUCT HEATER	10-VE419			16.00	1	16.00		0.00		0.00		0.00	1	10 min	1	13 s
114	REMOTE SHUTDOWN PANEL ROOM SUPPLY FAN	OVH316			4.00	1	4.00		0.00		0.00		0.00	-	-	1	10 min
115	REMOTE SHUTDOWN PANEL ROOM HEATING COIL	OVH316			10.00	1	10.00		0.00		0.00		0.00	-	-	1	10 min
116	PLANT LEAK DETECTION SYSTEM HEAT TRACING PANEL (SEE NOTE 26)	10C 282			12.00		0.00		0.00		0.00	1	12.00	1	10 min	1	10 min
117	UNIT VENT RMS HEAT TRACING PANEL	10C 355			15.00	1	15.00		0.00		0.00		0.00	1	10 min	1	10 min
118	POST ACCIDENT SAMPLING SYS HEAT TRACING PANEL	10C 203			15.00		0.00	1	15.00		0.00		0.00	1	10 min	1	10 min
119	ELECTRIC UNIT HEATERS	0A,0B,VE389			24.00		0.00	1	24.00		0.00		0.00	3	10 min	3	10 min
		0CVE390															
120	TSC ELECTRIC PAN HUMIDIFIER (NOTE 26)	OOVH 314	16	0.920	12.97		0.00	1	12.97		0.00		0.00	1	10 min	1	10 min
121	WING AREA EXHAUST FANS	1AV414, 1BV414			16.00	1	16.00		0.00		0.00	1	16.00	1	-	1	10 min
122	WING AREA SUPPLY FANS	1AVH304, 1BVH304			40.00	1	40.00		0.00		0.00	1	40.00	1	-	1	10 min
123	SPDS UPS	3ON401			60.00	1	60.00	1	60.00		0.00		0.00	1	-	1	20 min

USER RESPONSIBLE FOR VERIFYING REVISION, STATUS AND CHANGES

NOTES

1 EACH STANDBY DIESEL GENERATOR IS RATED AS FOLLOWS:
4430 KW - CONTINUOUS WITH 10% OVERLAOD CAPACITY FOR 2 HRS IN EVERY 24 HOURS
4737 KW - 2000 HOURS
4873 KW - 2 HOURS
5316 KW - 30 MINUTES

2 LOADING SEQUENCE IS BASED ON AVAILABILITY OF THREE SDGs AND THEIR ASSOCIATED ELECTRIC POWER DISTRIBUTION SYSTEMS

3 DBA = DESIGN BASIS ACCIDENT
DBA = LOCA + LOP
LOCA = LOSS-OF-COOLANT ACCIDENT
LOP = LOSS OF OFFSITE POWER

4 MOV'S MAXIMUM STROKING TIME WILL VARY FROM 20 TO 70 SECONDS EXCEPT FOR THE MAIN STEAM STOP VALVES, WITH STROKING TIME OF 120 SECONDS, THE SACS DISCHARGE TO TOWER VALVES, WITH STROKE TIME OF 90 SEC, AND SACS CROSSTIE VALVES TO INLET & OUTLET OF SPENT FUEL POOL COOLING HEAT EXCHANGERS WITH STROKING TIME OF 84 SECS. ALTHOUGH MOV LOADS ARE OF SMALL MAGNITUDE AND SHORT PERIOD OF APPLICATION, MOV LOADS OF 14.81 KW FROM TABLE 7 ARE USED FOR CONSERVATISM. 8

5 "OPERATING KW" IS OBTAINED USING THE STANDARD HP TO KW TRANSFORMATION FORMULA FOR ALL LOADS.

6 DURING A DBA, ANY TWO CORE SPRAY PUMPS AND THREE RHR PUMPS CAN BE MANUALLY TRIPPED AFTER 10 MINUTES FROM THE OCCURENCE OF LOCA, DEPENDING ON THE LOAD ON EACH STANDBY DIESELGENERATOR EITHER THE A OR THE B RHR PUMP MUST BE RETAINED IN SERVICE AFTER 10 MIN. FROM THE OCCURENCE OF LOCA

USER RESPONSIBLE FOR VERIFYING REVISION, STATUS AND CHANGES

7 BUSES A AND B EACH HAVE TWO FRVS RECIRCULATING FANS AND TWO UNIT HEATING COILS CONNECTEDTO THEM. BUSES C AND D EACH HAVE ONE FRVS RECIRCULATING FAN AND ONE UNIT HEATING COIL CONNECTED TO THEM. IN THE CASE OF A DBA, ONE FAN AND ONE UNIT HEATING COIL WILL START ON EACH OF BUSES A,B,C AND D AND THE REMAINING FANS AND HEATING COILS WILL START IN DIESEL BUSES A AND B AT THE TIMES IN THE LOADING CHART.

8 MOTOR HORSE POWER SHOWN IS THE MAXIMUM BREAK HORSE POWER REQUIRD FOR THAT PUMP AS SHOWN IN THE ATTACHED LETTER MDE-01-0016 DATED 5/30/2001

9 THE AUTOLEAD FAN STARTS AT 30 S, THE AUTO FAN (LAG) WILL START AT 95 S.

10 MOTOR HORSE POWER RATING IS 680 HP. HOWEVER, PER M723-18-3 THIS APPLICATION POWER REQUIREMENT IS 506 KW.

11 UPON THE OCCURENCE OF A LOCA, NON-CLASS 1E LOADS ARE TRIPPED BY LOCA SIGNAL IN THREE (3) SECONDS BY TRIPPING THE UNIT SUBSTATION CIRCUIT BREAKERS FEEDING THE NON CLASS 1E MCCs AND MOTORS. THESE LOADS CAN BE REENERGIZED MANUALLY AT 10 MINUTES AFTER THE OCCURENCE OF LOCA.

12 TWO REDUNDENT 25 HP PUMPS ARE PROVIDED.

13 TIMES SHOWN ARE FROM THE OCCURENCE OF LOCA OR LOSS OF OFFSITE POWER.

14 LOADS WERE TAKEN FROM CALC. 1.1(Q) AND SINGLE LINE DIAGRAMS FOR MCCs AND UNIT SUBSTATIONS.

USER RESPONSIBLE FOR VERIFYING REVISION, STATUS AND CHANGES

15 LOADS ARE NOT SEQUENCED BUT POWER IS REQUIRED TO BE AVAILABLE TO THE LOADS IN THE EVENT OF A LOP OR BE AVAILABLE WITHIN 25 SECONDS AFTER AN ATWS INITIATION SIGNAL. THE TIME SHOWN (13 S) IS WHEN POWER IS AVAILABLE AFTER LOP.

16 MOTOR HP RATING IS 430 HP, HOWEVER PER M723-240 EQUIPMENT DESIGN REQUIRES 198 KW INPUT POWER

17 125 VDC BATTERY CHARGERS RATED 132 VDC & 200 ADC OUTPUT WITH 115% CURRENT LIMIT AND EFFICIENCY OF 0.8 PER PE151Q-0023
STATION 120 VOLT INVERTERS ARE INCLUDED IN THE BATTERY CHARGER LOAD

18 250 VDC BATTERY CHARGERS RATED 264 VDC & 50 ADC OUTPUT WITH 115% CURRENT LIMIT AND EFFICIENCYOF 0.8 PER PE151Q-0014

19 125 VDC BATTERY CHARGERS RATED 132 VDC & 300 ADC OUTPUT WITH 115% CURRENT LIMIT AND EFFICIENCY OF 0.8 PER PE051Q-0014

20 250 VDC BATTERY CHARGERS RATED 264 VDC & 150 ADC OUTPUT WITH 115% CURRENT LIMIT AND EFFICIENCY OF 0.8 PER PE051Q-0015

21 ESSENTIAL LIGHTING LOAD IS BASED ON MCC BKR FEEDING EACH PANEL (SECT.5.11). FOR CASES INVOLVING A DIESEL FAILURE, THAT FAILED CHANNEL IS ASSUMED TO BE MANUALLY APPLIED TO ANOTHER DIESEL PER DRAWING E1421 REV.0 SH 1.

22 IF CHANNEL “C” OR ‘D" FAILS MINIMUM REQUIRED IS 7; IF CHANNEL "A’ OR "B" FAILS MINIMUM REQUIRED IS 8.

23 PANEL OOL311 FED BY 50 AMP BKR (37.4 KW); 1OL111 FED BY 70 AMP BKR (52.4 KW); 1OL211 AND 1OL411 EACH FED BY 125 AMP BKR (93.5 KW).

24 EFFICIENCIES AND POWER FACTORS WERE OBTAINED FROM OPAL - LOAD MANAGEMENT DATA BASE

25 THESE PANELS ARE RATED 75 KVA EACH, BUT BASED ON E1405 THEY ARE NOT FULLY LOADED. THE TOTAL LOAD FOR ALL 4 PANELS FOR CHANNELS A,C AND D IS APPROXIMATELY 24KVA.AND FOR CHANNEL B IS APPROXIMATELY 30 KVA. THEREORE, FOR CONSERVATISM A TOTAL LOAD OF 75*0.50=37.5 KVA IS CONSIDERED

26 FOR CONSERVATISM BREAKER RATING WAS USED FOR THESE LOADS

27 THE LOADING SEQUENCE IS BASED ON HOPE CREEK UFSAR TABLE 8.3-1.

28 TIME INDICATED IS SEQUENCE TIME REQUIRED IF CHILLERS ARE OFF PRIOR TO DBA OR LOP. IF CHILLERS ARE ON PRIOR TO DBA OR LOP, SEQUENCE TIME REQUIRED IS 160 SECONDS.

29 LOASDS ARE NOT SEQUENCED BUT ARE CONTROLLED BY PROCESS SIGNALS. FOR SDG LOADING PURPOSES THESE LOADS ARE ASSUMED TO START AND RUN AFTER 13 SECONDS FROM THE DBA/LOCA EVENT

			Standby Diesel Generator A						Standby Diesel Generator B					
			<10 MIN		10-60 MIN		>60 MIN		<10 MIN		10-60 MIN		>60 MIN	
Item	DESCRIPTION	PF	KW	KVAR	KW	KVAR	KW	KVAR	KW	KVAR	KW	KVAR	KW	KVAR
	CLASS 1E LOADS													
1	REACTOR CORE SPRAY PUMPS (Note 8)	0.910	525.41	239.38					525.41	239.38	525.41	239.38	525.41	239.38
2	RHR PUMPS (Note 8)	0.890	1002.69	513.69	1002.69	513.69	1002.69	513.69	1002.69	513.69				
3	SAFETY AUX. CLG. SYS. PUMPS (Note 8)	0.909	420.62	192.86	420.62	192.86	420.62	192.86	420.62	192.86				
4	CORE SPRAY PMP. RM. CLR. UNIT	0.850	12.16	7.54					12.16	7.54	12.16	7.54	12.16	7.54
5	MOTOR OPERATED VALVES	0.400	14.81	33.93	14.81	33.93	14.81	33.93	14.81	33.93	14.81	33.93	14.81	33.93
6	SWGR. RM. UNIT CLR. FANS	0.850	20.27	12.56	20.27	12.56	20.27	12.56	20.27	12.56	20.27	12.56	20.27	12.56
7	INTAKE STRUCTURE SUPPLY FANS	0.850	32.43	20.10	32.43	20.10	32.43	20.10	32.43	20.10	32.43	20.10	32.43	20.10
8	INTAKE STRUCTURE TRAVELING SCREENS AREA FANS	0.850	6.08	3.77	6.08	3.77	6.08	3.77	6.08	3.77	6.08	3.77	6.08	3.77
9	RHR PUMP RM UNIT COOLER FANS	0.850	16.22	10.05	16.22	10.05	16.22	10.05	16.22	10.05				
10	RCIC PUMP RM. UNIT COOLERS	0.850							8.11	5.03	8.11	5.03	8.11	5.03
11	HPCI PUMP RM UNIT COOLERS	0.850	12.16	7.54	12.16	7.54	12.16	7.54						
12	125-V DC BATTERY CHARGERS	0.600	75.90	101.20	75.90	101.20	75.90	101.20	75.90	101.20	75.90	101.20	75.90	101.20
13	DIESEL AREA BATTERY ROOM EXHAUST FANS	0.850	0.81	0.50	0.81	0.50	0.81	0.50	0.81	0.50	0.81	0.50	0.81	0.50
14	DIESEL FUEL OIL TRANSFER PUMPS	0.850					4.05	2.51					4.05	2.51
15	STATION SERVICE WATER PUMPS (Note 8)	0.875	634.22	350.90	634.22	350.90	634.22	350.90	634.22	350.90				
16	RB FRVS RECIRCULATION SYSTEM FANS	0.850	243.26	150.76	121.63	75.38	121.63	75.38	243.26	150.76	121.63	75.38	121.63	75.38
17	CONTROL RM SUPPLY FANS	0.850												
18	208Y/120-V AC XFMRS TO POWER DIST PANELS	0.850	37.50	23.24	37.50	23.24	37.50	23.24	37.50	23.24	37.50	23.24	37.50	23.24
19	RESERVED FOR FUTURE USE	1.000												
20	INTAKE STRUCTURE EXHAUST FANS	0.850	32.43	20.10	32.43	20.10	32.43	20.10	32.43	20.10	32.43	20.10	32.43	20.10
21	CONTROL ROOM CHILLED WATER CIRCULATING PUMPS	0.850												
22	CNTRL RM SUPPLY UNIT HTG COILS	1.000												
23	CONTROL ROOM WATER CHILLERS (Note 10)	0.878												
24	DIESEL GEN RM RECIRC SYSTEMS FANS	0.850	202.72	125.63	202.72	125.63	202.72	125.63	202.72	125.63	202.72	125.63	202.72	125.63
25	PRIMARY CONTAINMENT INSTRUMENT GAS COMPRESSORS	0.850												
26	BATTERY CHARGERS, 250-V DC	0.600	19.00	25.33	19.00	25.33	19.00	25.33	19.00	25.33	19.00	25.33	19.00	25.33
27	CONTROL AREA BATTERY ROOM EXHAUST FANS	0.850												
28	RB FRVS RECIRC UNIT HEATING COILS	1.000	200.00		100.00		100.00		200.00		100.00		100.00	
29	TRAVELING SCREEN SPRAY WATER BOOSTER PUMPS	0.850	16.22	10.05	16.22	10.05	16.22	10.05	16.22	10.05	16.22	10.05	16.22	10.05
30	RB FRVS VENT UNIT HEATING COILS	1.000	32.00		32.00		32.00		32.00					
31	CONTROL ROOM SUPPLY SYSTEM RETURN FANS	0.850												
32	CONTROL ROOM EMERGENCY FILTER FANS	0.850												

			Standby Diesel Generator A						Standby Diesel Generator B					
			<10 MIN		10-60 MIN		>60 MIN		<10 MIN		10-60 MIN		>60 MIN	
Item	DESCRIPTION	PF	KW	KVAR	KW	KVAR	KW	KVAR	KW	KVAR	KW	KVAR	KW	KVAR
33	SAFETY AUX COOLING SYSTEM UNIT	0.850												
34	FUEL POOL COOLING PUMPS	0.850					60.82	37.69						
35	CONTROL ROOM EMERGENCY FILTER UNIT ELECTRIC HEATING COILS	1.000												
36	CONTROL EQUIPMENT ROOM AIR SUPPLY FANS	0.850												
37	RB FRVS VENT SYS FANS	0.850	20.27	12.56	20.27	12.56	20.27	12.56	20.27	12.56				
38	CONTAINMENT HYDROGEN RECOMBINER SYSTEM	0.850												
39	CONTROL EQIP ROOM SUPPLY UNIT HEATING COILS	1.000												
40	SERVICE WATER SELF-CLEANING STRAINERS	0.850	0.81	0.50	0.81	0.50	0.81	0.50	0.81	0.50	0.81	0.50	0.81	0.50
41	STANDBY LIQUID CONTROL PUMPS	0.850	32.43	20.10	32.43	20.10	32.43	20.10	32.43	20.10	32.43	20.10	32.43	20.10
42	RESERVED FOR FUTURE USE	1.000												
43	RESERVED FOR FUTURE USE	1.000												
44	RESERVED FOR FUTURE USE	1.000												
45	RESERVED FOR FUTURE USE	1.000												
46	480 V POWER SUPPLY TO CLASS 1E CHILLER PANELS	0.850	4.00	2.48	4.00	2.48	4.00	2.48	4.00	2.48	4.00	2.48	4.00	2.48
47	TRAVELING SCREENS	0.850	4.05	2.51	4.05	2.51	4.05	2.51	4.05	2.51	4.05	2.51	4.05	2.51
48	ECCS JOCKEY PUMPS	0.850	8.11	5.03	8.11	5.03	8.11	5.03	8.11	5.03	8.11	5.03	8.11	5.03
49	MOTOR DRIVEN DIESEL GENERATOR FUEL OIL STANDBY PUMPS	0.850	1.62	1.01	1.62	1.01	1.62	1.01	1.62	1.01	1.62	1.01	1.62	1.01
50	STANDBY LIQUID CONTROL PUMP ROOM DUCT	1.000			45.00		45.00							
51	480 V POWER SUPPLY TO HYDROGEN AND OXYGEN ANALYZER PANELS	0.850	1.00	0.62	1.00	0.62	1.00	0.62	1.00	0.62	1.00	0.62	1.00	0.62
52	250 V DC BATTERY ROOM DUCT HEATERS	1.000	10.00		10.00		10.00							
53	125 V DC DIESEL AREA BATTERY ROOM DUCT HEATERS	1.000	21.00		21.00		21.00		21.00		21.00		21.00	
54	HPCI PUMP ROOM DUCT HEATER	1.000	11.00		11.00		11.00							
55	RCIC PUMP ROOM DUCT HEATER	1.000							7.00		7.00		7.00	
56	250 V DC BATTERY ROOM DUCT HEATER	1.000							8.00		8.00		8.00	
57	CLASS 1E PANEL ROOM WATER CHILLERS	0.886	198.00	103.62	198.00	103.62	198.00	103.62	198.00	103.62				
58	CLASS 1E PANEL ROOM CHILLED WATER PUMPS	0.850	32.43	20.10	32.43	20.10	32.43	20.10	32.43	20.10				
59	CLASS 1E PANEL ROOM SUPPLY & RETURN AIR FANS	0.850	60.82	37.69	60.82	37.69	60.82	37.69	60.82	37.69				
60	CLASS 1E PANEL ROOM ELECTRIC HEATERS	1.000	100.00		100.00		100.00		100.00					
61	BATTERY ROOM EXHAUST FANS	0.850	0.81	0.50	0.81	0.50	0.81	0.50	0.81	0.50	0.81	0.50	0.81	0.50

			Standby Diesel Generator A						Standby Diesel Generator B					
			<10 MIN		10-60 MIN		>60 MIN		<10 MIN		10-60 MIN		>60 MIN	
Item	DESCRIPTION	PF	KW	KVAR	KW	KVAR	KW	KVAR	KW	KVAR	KW	KVAR	KW	KVAR
62	BATTERY ROOM DUCT HEATERS	1.000												
63	H2/O2 ANALYZER HEAT TRACING PANELS	1.000												
64	RESERVED FOR FUTURE USE	1.000												
65	RESERVED FOR FUTURE USE	1.000												
66	RESERVED FOR FUTURE USE	1.000												
67	RESERVED FOR FUTURE USE	1.000												
68	RESERVED FOR FUTURE USE	1.000												
69	RESERVED FOR FUTURE USE	1.000												
70	RESERVED FOR FUTURE USE	1.000												

			Standby Diesel Generator A						Standby Diesel Generator B					
			<10 MIN		10-60 MIN		>60 MIN		<10 MIN		10-60 MIN		>60 MIN	
Item	DESCRIPTION	PF	KW	KVAR	KW	KVAR	KW	KVAR	KW	KVAR	KW	KVAR	KW	KVAR
	NON-CLASS 1E LOADS													
	See Note 11													
71	TURBINE GENERATOR TURNING GEAR OIL PUMP	0.850									32.00	19.83	32.00	19.83
72	STANDBY LIQUID CONTROL SOLUTION OPERATING HEATER	1.000			10.00		10.00							
73	DRYWELL COOLING UNIT FANS	0.850												
74	RADWASTE EXHAUST FANS	0.850												
75	ESSENTIAL PLANT LIGHTING	0.900			52.40	25.38	52.40	25.38			37.40	18.11	37.40	18.11
76	CRD WATER PUMPS	0.850												
77	TURBINE BUILDING BATTERY ROOM EXHAUST FANS	0.850			2.43	1.51	2.43	1.51			2.43	1.51	2.43	1.51
78	TURBINE GENERATOR AUX BEARING LIFT PUMPS 9 - 5HP EACH AND	0.850												
	TURNING GEAR - 60 HP										85.14	52.77	85.14	52.77
79	EMERGENCY INSTRUMENT AIR COMPRESSOR	0.850												
80	RADWASTE SUPPLY FANS	0.850												
81	REACTOR BUILDING SUPPLY AIR HANDLING UNITS	0.850												
82	REACTOR BUILDING EXHAUST FANS	0.850												
83	RADWASTE TANK VENT FILTER FANS	0.850			6.08	3.77	6.08	3.77			6.08	3.77	6.08	3.77
84	TURBINE BUILDING BATTERY ROOM SUPPLY FANS	0.850			4.05	2.51	4.05	2.51			4.05	2.51	4.05	2.51
85	RADWASTE TANK VENT FILTER HEATING COILS	1.000			3.60		3.60				3.60		3.60	
86	CHEMICAL LAB EXHAUST FANS	0.850			16.22	10.05	16.22	10.05			16.22	10.05	16.22	10.05
87	DIESEL GENERATOR STARTING AIR COMPRESSORS	0.850			12.16	7.54	12.16	7.54			12.16	7.54	12.16	7.54
88	REACTOR AUX COOLING SYSTEM PUMPS	0.850												
89	125-V DC BATTERY CHARGERS	0.600			114.00	152.00	114.00	152.00			114.00	152.00	114.00	152.00
90	125-V DC BATTERY CHARGERS	0.600			38.00	50.67	38.00	50.67			38.00	50.67	38.00	50.67
91	250-V DC BATTERY CHARGERS	0.600									57.00	76.00	57.00	76.00
92	STANDBY LIQUID CONTROL SOL MIXING HEATER	1.000												
93	RFPT AUX LUBE OIL PUMP (NOTE 12) &	0.850												
	TURNING GEAR MOTORS				21.49	13.32	21.49	13.32			21.49	13.32	21.49	13.32
94	RESERVED FOR FUTURE USE	1.000												
95	208 V/120 V AC XFMRS TO DIST PANELS	0.850			30.00	18.59	30.00	18.59			15.00	9.30	15.00	9.30
96	REACTOR BUILDING FLOOR DRAIN SUMP PUMP	0.850												

			Standby Diesel Generator A						Standby Diesel Generator B					
			<10 MIN		10-60 MIN		>60 MIN		<10 MIN		10-60 MIN		>60 MIN	
Item	DESCRIPTION	PF	KW	KVAR	KW	KVAR	KW	KVAR	KW	KVAR	KW	KVAR	KW	KVAR
97	DRYWELL EQUIP DRAIN SUMP PUMPS	0.850			4.05	2.51	4.05	2.51			4.05	2.51	4.05	2.51
98	DRYWELL FLOOR DRAIN SUMP PUMPS	0.850			4.05	2.51	4.05	2.51			4.05	2.51	4.05	2.51
99	POWER SUPPLY FOR UNIT VENT RADIATION MONITORING SYSTEMS	0.850			3.50	2.17	3.50	2.17			3.50	2.17	3.50	2.17
100	POWER SUPPLY FOR DLD RADIATION MONITORING SYSTEMS	0.850												
101	TURBINE GENERATOR MAIN SEAL OIL PUMP	0.850									16.22	10.05	16.22	10.05
102	TURBINE GENERATOR RECIRC SEAL OIL PUMP	0.850									6.08	3.77	6.08	3.77
103	TURBINE GENERATOR SEAL OIL VACUUM PUMP	0.850									2.43	1.51	2.43	1.51
104	RAWASTE + 24V DC BATTERY ROOM DUCT HEATER	1.000			5.00		5.00							
105	CONDENSATE STORAGE TANK HEAT TRACING (SEE NOTE 26)	1.000												
106	TSC SUPPLY SYSTEM FAN	0.850												
107	TSC SUPPLY SYSTEM HEATING COIL	1.000												
108	TSC EMERGENCY FILTER FAN	0.850												
109	TSC EMERGENCY FILTER HTG COIL	1.000												
110	STEAM TUNNEL UNIT COOLERS	0.850									16.00	9.92	16.00	9.92
111	TURBINE BUILDING BATTERY ROOM SUPPLY FAN & HTG COIL	1.000			50.00		50.00							
112	TURBINE BUILDING COMPARTMENT EXHAUST FANS	0.850												
113	CONTROL AREA 125 V DC BATTERY ROOM DUCT HEATER	1.000			16.00		16.00							
114	REMOTE SHUTDOWN PANEL ROOM SUPPLY FAN	0.850			4.00	2.48	4.00	2.48						
115	REMOTE SHUTDOWN PANEL ROOM HEATING COIL	1.000			10.00		10.00							
116	PLANT LEAK DETECTION SYSTEM HEAT TRACING PANEL (SEE NOTE 26)	1.000												
117	UNIT VENT RMS HEAT TRACING PANEL	1.000			15.00		15.00							
118	POST ACCIDENT SAMPLING SYS HEAT TRACING PANEL	1.000												
119	ELECTRIC UNIT HEATERS	1.000												
120	TSC ELECTRIC PAN HUMIDIFIER (NOTE 26)	0.850												
121	WING AREA EXHAUST FANS	0.850			16.00	9.92	16.00	9.92						
122	WING AREA SUPPLY FANS	0.850			40.00	24.79	40.00	24.79						
123	SPDS UPS	1.000					60.00	0.00						

			Standby Diesel Generator A						Standby Diesel Generator B					
			<10 MIN		10-60 MIN		>60 MIN		<10 MIN		10-60 MIN		>60 MIN	
Item	DESCRIPTION	PF	KW	KVAR	KW	KVAR	KW	KVAR	KW	KVAR	KW	KVAR	KW	KVAR
124	RESERVED FOR FUTURE USE	1.000												
125	RESERVED FOR FUTURE USE	1.000												
	KW		4063.28	2055.87	3827.12	2063.28	3951.99	2103.49	4053.22	2053.36	1811.25	1186.30	1815.30	1188.81
	KVAR		2055.87		2063.28		2103.49		2053.36		1186.30		1188.81	
	KVA		4553.77		4347.87		4476.93		4543.66		2165.16		2169.93	
	PF		0.89		0.88		0.88		0.89		0.84		0.84	

			Standby Diesel Generator C						Standby Diesel Generator D					
			<10 MIN		10-60 MIN		>60 MIN		<10 MIN		10-60 MIN		>60 MIN	
Item	DESCRIPTION	PF	KW	KVAR	KW	KVAR	KW	KVAR	KW	KVAR	KW	KVAR	KW	KVAR
	CLASS 1E LOADS													
1	REACTOR CORE SPRAY PUMPS (Note 8)	0.910	525.41	239.38					525.41	239.38	525.41	239.38	525.41	239.38
2	RHR PUMPS (Note 8)	0.890	1002.69	513.69					1002.69	513.69				
3	SAFETY AUX. CLG. SYS. PUMPS (Note 8)	0.909	420.62	192.86	420.62	192.86	420.62	192.86	420.62	192.86	420.62	192.86	420.62	192.86
4	CORE SPRAY PMP. RM. CLR. UNIT	0.850	12.16	7.54					12.16	7.54	12.16	7.54	12.16	7.54
5	MOTOR OPERATED VALVES	0.400	14.81	33.93	14.81	33.93	14.81	33.93	14.81	33.93	14.81	33.93	14.81	33.93
6	SWGR. RM. UNIT CLR. FANS	0.850	20.27	12.56	20.27	12.56	20.27	12.56	20.27	12.56	20.27	12.56	20.27	12.56
7	INTAKE STRUCTURE SUPPLY FANS	0.850	32.43	20.10					32.43	20.10				
8	INTAKE STRUCTURE TRAVELING SCREENS AREA FANS	0.850												
9	RHR PUMP RM UNIT COOLER FANS	0.850	16.22	10.05					16.22	10.05				
10	RCIC PUMP RM. UNIT COOLERS	0.850												
11	HPCI PUMP RM UNIT COOLERS	0.850												
12	125-V DC BATTERY CHARGERS	0.600	113.85	151.80	113.85	151.80	113.85	151.80	113.85	151.80	113.85	151.80	113.85	151.80
13	DIESEL AREA BATTERY ROOM EXHAUST FANS	0.850	0.81	0.50	0.81	0.50	0.81	0.50	0.81	0.50	0.81	0.50	0.81	0.50
14	DIESEL FUEL OIL TRANSFER PUMPS	0.850					4.05	2.51					4.05	2.51
15	STATION SERVICE WATER PUMPS (Note 8)	0.875	634.22	350.90	634.22	350.90	634.22	350.90	634.22	350.90	634.22	350.90	634.22	350.90
16	RB FRVS RECIRCULATION SYSTEM FANS	0.850	121.63	75.38	121.63	75.38	121.63	75.38	121.63	75.38	121.63	75.38	121.63	75.38
17	CONTROL RM SUPPLY FANS	0.850	32.43	20.10	32.43	20.10	32.43	20.10	32.43	20.10				
18	208Y/120-V AC XFMRS TO POWER DIST PANELS	0.850	37.50	23.24	37.50	23.24	37.50	23.24	37.50	23.24	37.50	23.24	37.50	23.24
19	RESERVED FOR FUTURE USE	1.000												
20	INTAKE STRUCTURE EXHAUST FANS	0.850	32.43	20.10					32.43	20.10				
21	CONTROL ROOM CHILLED WATER CIRCULATING PUMPS	0.850	48.65	30.15	48.65	30.15	48.65	30.15	48.65	30.15				
22	CNTRL RM SUPPLY UNIT HTG COILS	1.000	90.00		90.00		90.00		90.00					
23	CONTROL ROOM WATER CHILLERS (Note 10)	0.878	506.00	275.86	506.00	275.86	506.00	275.86	506.00	275.86				
24	DIESEL GEN RM RECIRC SYSTEMS FANS	0.850	202.72	125.63	202.72	125.63	202.72	125.63	202.72	125.63	202.72	125.63	202.72	125.63
25	PRIMARY CONTAINMENT INSTRUMENT GAS COMPRESSORS	0.850			12.16	7.54	12.16	7.54			12.16	7.54	12.16	7.54
26	BATTERY CHARGERS, 250-V DC	0.600												
27	CONTROL AREA BATTERY ROOM EXHAUST FANS	0.850	4.05	2.51	4.05	2.51	4.05	2.51	4.05	2.51	4.05	2.51	4.05	2.51
28	RB FRVS RECIRC UNIT HEATING COILS	1.000	100.00		100.00		100.00		100.00		100.00		100.00	
29	TRAVELING SCREEN SPRAY WATER BOOSTER PUMPS	0.850	16.22	10.05	16.22	10.05	16.22	10.05	16.22	10.05	16.22	10.05	16.22	10.05
30	RB FRVS VENT UNIT HEATING COILS	1.000												
31	CONTROL ROOM SUPPLY SYSTEM RETURN FANS	0.850	24.33	15.08	24.33	15.08	24.33	15.08	24.33	15.08				
32	CONTROL ROOM EMERGENCY FILTER FANS	0.850	20.27	12.56	20.27	12.56	20.27	12.56	20.27	12.56				

			Standby Diesel Generator C						Standby Diesel Generator D					
			<10 MIN		10-60 MIN		>60 MIN		<10 MIN		10-60 MIN		>60 MIN	
Item	DESCRIPTION	PF	KW	KVAR	KW	KVAR	KW	KVAR	KW	KVAR	KW	KVAR	KW	KVAR
33	SAFETY AUX COOLING SYSTEM UNIT	0.850	12.16	7.54	12.16	7.54	12.16	7.54	12.16	7.54	12.16	7.54	12.16	7.54
34	FUEL POOL COOLING PUMPS	0.850												
35	CONTROL ROOM EMERGENCY FILTER UNIT ELECTRIC HEATING COILS	1.000	13.00		13.00		13.00		13.00		13.00		13.00	
36	CONTROL EQUIPMENT ROOM AIR SUPPLY FANS	0.850	202.72	125.63	202.72	125.63	202.72	125.63	202.72	125.63				
37	RB FRVS VENT SYS FANS	0.850												
38	CONTAINMENT HYDROGEN RECOMBINER SYSTEM	0.850											140.00	86.76
39	CONTROL EQIP ROOM SUPPLY UNIT HEATING COILS	1.000	100.00		100.00		100.00		100.00					
40	SERVICE WATER SELF-CLEANING STRAINERS	0.850	0.81	0.50	0.81	0.50	0.81	0.50	0.81	0.50	0.81	0.50	0.81	0.50
41	STANDBY LIQUID CONTROL PUMPS	0.850												
42	RESERVED FOR FUTURE USE	1.000												
43	RESERVED FOR FUTURE USE	1.000												
44	RESERVED FOR FUTURE USE	1.000												
45	RESERVED FOR FUTURE USE	1.000												
46	480 V POWER SUPPLY TO CLASS 1E CHILLER PANELS	0.850	4.00	2.48	4.00	2.48	4.00	2.48	4.00	2.48	4.00	2.48	4.00	2.48
47	TRAVELING SCREENS	0.850	4.05	2.51	4.05	2.51	4.05	2.51	4.05	2.51	4.05	2.51	4.05	2.51
48	ECCS JOCKEY PUMPS	0.850	8.11	5.03	8.11	5.03	8.11	5.03	8.11	5.03	8.11	5.03	8.11	5.03
49	MOTOR DRIVEN DIESEL GENERATOR FUEL OIL STANDBY PUMPS	0.850	1.62	1.01	1.62	1.01	1.62	1.01	1.62	1.01	1.62	1.01	1.62	1.01
50	STANDBY LIQUID CONTROL PUMP ROOM DUCT	1.000									45.00			
51	480 V POWER SUPPLY TO HYDROGEN AND OXYGEN ANALYZER PANELS	0.850												
52	250 V DC BATTERY ROOM DUCT HEATERS	1.000												
53	125 V DC DIESEL AREA BATTERY ROOM DUCT HEATERS	1.000	21.00		21.00		21.00		21.00		21.00		21.00	
54	HPCI PUMP ROOM DUCT HEATER	1.000												
55	RCIC PUMP ROOM DUCT HEATER	1.000												
56	250 V DC BATTERY ROOM DUCT HEATER	1.000												
57	CLASS 1E PANEL ROOM WATER CHILLERS	0.886												
58	CLASS 1E PANEL ROOM CHILLED WATER PUMPS	0.850												
59	CLASS 1E PANEL ROOM SUPPLY & RETURN AIR FANS	0.850												
60	CLASS 1E PANEL ROOM ELECTRIC HEATERS	1.000												
61	BATTERY ROOM EXHAUST FANS	0.850												

			Standby Diesel Generator C						Standby Diesel Generator D					
			<10 MIN		10-60 MIN		>60 MIN		<10 MIN		10-60 MIN		>60 MIN	
Item	DESCRIPTION	PF	KW	KVAR	KW	KVAR	KW	KVAR	KW	KVAR	KW	KVAR	KW	KVAR
62	BATTERY ROOM DUCT HEATERS	1.000	14.00		14.00		14.00		14.00		14.00		14.00	
63	H2/O2 ANALYZER HEAT TRACING PANELS	1.000	15.00		15.00		15.00		15.00		15.00		15.00	
64	RESERVED FOR FUTURE USE	1.000												
65	RESERVED FOR FUTURE USE	1.000												
66	RESERVED FOR FUTURE USE	1.000												
67	RESERVED FOR FUTURE USE	1.000												
68	RESERVED FOR FUTURE USE	1.000												
69	RESERVED FOR FUTURE USE	1.000												
70	RESERVED FOR FUTURE USE	1.000												

			Standby Diesel Generator C						Standby Diesel Generator D					
			<10 MIN		10-60 MIN		>60 MIN		<10 MIN		10-60 MIN		>60 MIN	
Item	DESCRIPTION	PF	KW	KVAR	KW	KVAR	KW	KVAR	KW	KVAR	KW	KVAR	KW	KVAR
	NON-CLASS 1E LOADS													
	See Note 11													
71	TURBINE GENERATOR TURNING GEAR OIL PUMP	0.850												
72	STANDBY LIQUID CONTROL SOLUTION OPERATING HEATER	1.000												
73	DRYWELL COOLING UNIT FANS	0.850												
74	RADWASTE EXHAUST FANS	0.850												
75	ESSENTIAL PLANT LIGHTING	0.900			93.50	45.28	93.50	45.28			93.50	45.28	93.50	45.28
76	CRD WATER PUMPS	0.850			202.72	125.63	202.72	125.63						
77	TURBINE BUILDING BATTERY ROOM EXHAUST FANS	0.850												
78	TURBINE GENERATOR AUX BEARING LIFT PUMPS 9 - 5HP EACH AND	0.850												
	TURNING GEAR - 60 HP													
79	EMERGENCY INSTRUMENT AIR COMPRESSOR	0.850												
80	RADWASTE SUPPLY FANS	0.850												
81	REACTOR BUILDING SUPPLY AIR HANDLING UNITS	0.850												
82	REACTOR BUILDING EXHAUST FANS	0.850												
83	RADWASTE TANK VENT FILTER FANS	0.850												
84	TURBINE BUILDING BATTERY ROOM SUPPLY FANS	0.850												
85	RADWASTE TANK VENT FILTER HEATING COILS	1.000												
86	CHEMICAL LAB EXHAUST FANS	0.850												
87	DIESEL GENERATOR STARTING AIR COMPRESSORS	0.850			12.16	7.54	12.16	7.54			12.16	7.54	12.16	7.54
88	REACTOR AUX COOLING SYSTEM PUMPS	0.850												
89	125-V DC BATTERY CHARGERS	0.600												
90	125-V DC BATTERY CHARGERS	0.600			38.00	50.67	38.00	50.67			38.00	50.67	38.00	50.67
91	250-V DC BATTERY CHARGERS	0.600												
92	STANDBY LIQUID CONTROL SOL MIXING HEATER	1.000									40.00		40.00	
93	RFPT AUX LUBE OIL PUMP (NOTE 12) &	0.850												
	TURNING GEAR MOTORS				21.49	13.32	21.49	13.32						
94	RESERVED FOR FUTURE USE	1.000												
95	208 V/120 V AC XFMRS TO DIST PANELS	0.850			45.00	27.89	45.00	27.89			15.00	9.30	15.00	9.30
96	REACTOR BUILDING FLOOR DRAIN SUMP PUMP	0.850			8.11	5.03	8.11	5.03			8.11	5.03	8.11	5.03

			Standby Diesel Generator C						Standby Diesel Generator D					
			<10 MIN		10-60 MIN		>60 MIN		<10 MIN		10-60 MIN		>60 MIN	
Item	DESCRIPTION	PF	KW	KVAR	KW	KVAR	KW	KVAR	KW	KVAR	KW	KVAR	KW	KVAR
97	DRYWELL EQUIP DRAIN SUMP PUMPS	0.850												
98	DRYWELL FLOOR DRAIN SUMP PUMPS	0.850												
99	POWER SUPPLY FOR UNIT VENT RADIATION MONITORING SYSTEMS	0.850												
100	POWER SUPPLY FOR DLD RADIATION MONITORING SYSTEMS	0.850			3.50	2.17	3.50	2.17						
101	TURBINE GENERATOR MAIN SEAL OIL PUMP	0.850												
102	TURBINE GENERATOR RECIRC SEAL OIL PUMP	0.850												
103	TURBINE GENERATOR SEAL OIL VACUUM PUMP	0.850												
104	RAWASTE + 24V DC BATTERY ROOM DUCT HEATER	1.000												
105	CONDENSATE STORAGE TANK HEAT TRACING (SEE NOTE 26)	1.000			12.00	0.00	12.00	0.00						
106	TSC SUPPLY SYSTEM FAN	0.850			20.00	12.39	20.00	12.39						
107	TSC SUPPLY SYSTEM HEATING COIL	1.000			30.00		30.00							
108	TSC EMERGENCY FILTER FAN	0.850			20.00	12.39	20.00	12.39						
109	TSC EMERGENCY FILTER HTG COIL	1.000			13.00		13.00							
110	STEAM TUNNEL UNIT COOLERS	0.850									16.00	9.92	16.00	9.92
111	TURBINE BUILDING BATTERY ROOM SUPPLY FAN & HTG COIL	1.000												
112	TURBINE BUILDING COMPARTMENT EXHAUST FANS	0.850												
113	CONTROL AREA 125 V DC BATTERY ROOM DUCT HEATER	1.000												
114	REMOTE SHUTDOWN PANEL ROOM SUPPLY FAN	0.850												
115	REMOTE SHUTDOWN PANEL ROOM HEATING COIL	1.000												
116	PLANT LEAK DETECTION SYSTEM HEAT TRACING PANEL (SEE NOTE 26)	1.000									12.00		12.00	
117	UNIT VENT RMS HEAT TRACING PANEL	1.000												
118	POST ACCIDENT SAMPLING SYS HEAT TRACING PANEL	1.000			15.00		15.00							
119	ELECTRIC UNIT HEATERS	1.000			24.00		24.00							
120	TSC ELECTRIC PAN HUMIDIFIER (NOTE 26)	0.850			12.97	8.04	12.97	8.04						
121	WING AREA EXHAUST FANS	0.850									16.00	9.92	16.00	9.92
122	WING AREA SUPPLY FANS	0.850									40.00	24.79	40.00	24.79
123	SPDS UPS	1.000					60.00							

			Standby Diesel Generator C						Standby Diesel Generator D					
			<10 MIN		10-60 MIN		>60 MIN		<10 MIN		10-60 MIN		>60 MIN	
Item	DESCRIPTION	PF	KW	KVAR	KW	KVAR	KW	KVAR	KW	KVAR	KW	KVAR	KW	KVAR
124	RESERVED FOR FUTURE USE	1.000												
125	RESERVED FOR FUTURE USE	1.000												
	KW		4426.20	2288.68	3388.47	1795.71	3452.52	1798.22	4426.20	2288.68	2665.96	1415.33	2765.01	1504.60
	KVAR		2288.68		1795.71		1798.22		2288.68		1415.33		1504.60	
	KVA		4982.91		3834.88		3892.75		4982.91		3018.36		3147.88	
	PF		0.89		0.88		0.89		0.89		0.88		0.88	

			Standby Diesel Generator A						Standby Diesel Generator B					
			<10 MIN		10-60 MIN		>60 MIN		<10 MIN		10-60 MIN		>60 MIN	
Item	DESCRIPTION	PF	KW	KVAR	KW	KVAR	KW	KVAR	KW	KVAR	KW	KVAR	KW	KVAR
	CLASS 1E LOADS													
1	REACTOR CORE SPRAY PUMPS (Note 8)	0.91							525.41	239.38				
2	RHR PUMPS (Note 8)	0.89							1002.69	513.69	1002.69	513.69	1002.69	513.69
3	SAFETY AUX. CLG. SYS. PUMPS (Note 8)	0.909							420.62	192.86	420.62	192.86	420.62	192.86
4	CORE SPRAY PMP. RM. CLR. UNIT	0.85							12.16	7.54				
5	MOTOR OPERATED VALVES	0.4							14.81	33.93	14.81	33.93	14.81	33.93
6	SWGR. RM. UNIT CLR. FANS	0.85							20.27	12.56	20.27	12.56	20.27	12.56
7	INTAKE STRUCTURE SUPPLY FANS	0.85							32.43	20.10	32.43	20.10	32.43	20.10
8	INTAKE STRUCTURE TRAVELING SCREENS AREA FANS	0.85							6.08	3.77	6.08	3.77	6.08	3.77
9	RHR PUMP RM UNIT COOLER FANS	0.85							16.22	10.05	16.22	10.05	16.22	10.05
10	RCIC PUMP RM. UNIT COOLERS	0.85							8.11	5.03	8.11	5.03	8.11	5.03
11	HPCI PUMP RM UNIT COOLERS	0.85												
12	125-V DC BATTERY CHARGERS	0.6							75.90	101.20	75.90	101.20	75.90	101.20
13	DIESEL AREA BATTERY ROOM EXHAUST FANS	0.85							0.81	0.50	0.81	0.50	0.81	0.50
14	DIESEL FUEL OIL TRANSFER PUMPS	0.85											4.05	2.51
15	STATION SERVICE WATER PUMPS (Note 8)	0.875							634.22	350.90	634.22	350.90	634.22	350.90
16	RB FRVS RECIRCULATION SYSTEM FANS	0.85							243.26	150.76	243.26	150.76	243.26	150.76
17	CONTROL RM SUPPLY FANS	0.85												
18	208Y/120-V AC XFMRS TO POWER DIST PANELS	0.85							37.50	23.24	37.50	23.24	37.50	23.24
19	RESERVED FOR FUTURE USE	1.00												
20	INTAKE STRUCTURE EXHAUST FANS	0.85							32.43	20.10	32.43	20.10	32.43	20.10
21	CONTROL ROOM CHILLED WATER CIRCULATING PUMPS	0.85												
22	CNTRL RM SUPPLY UNIT HTG COILS	1												
23	CONTROL ROOM WATER CHILLERS (Note 10)	0.878												
24	DIESEL GEN RM RECIRC SYSTEMS FANS	0.85							202.72	125.63	202.72	125.63	202.72	125.63
25	PRIMARY CONTAINMENT INSTRUMENT GAS COMPRESSORS	0.85												
26	BATTERY CHARGERS, 250-V DC	0.6							19.00	25.33	19.00	25.33	19.00	25.33
27	CONTROL AREA BATTERY ROOM EXHAUST FANS	0.85												
28	RB FRVS RECIRC UNIT HEATING COILS	1							200.00		200.00		200.00	
29	TRAVELING SCREEN SPRAY WATER BOOSTER PUMPS	0.85							16.22	10.05	16.22	10.05	16.22	10.05
30	RB FRVS VENT UNIT HEATING COILS	1							32.00		32.00		32.00	
31	CONTROL ROOM SUPPLY SYSTEM RETURN	0.85												
32	CONTROL ROOM EMERGENCY FILTER FANS	0.85												
33	SAFETY AUX COOLING SYSTEM UNIT COOLERS	0.85												
34	FUEL POOL COOLING PUMPS	0.85											60.82	37.69

			Standby Diesel Generator A						Standby Diesel Generator B					
			<10 MIN		10-60 MIN		>60 MIN		<10 MIN		10-60 MIN		>60 MIN	
Item	DESCRIPTION	PF	KW	KVAR	KW	KVAR	KW	KVAR	KW	KVAR	KW	KVAR	KW	KVAR
35	CONTROL ROOM EMERGENCY FILTER UNIT ELECTRIC HEATING COILS	1												
36	CONTROL EQUIPMENT ROOM AIR SUPPLY	0.85												
37	RB FRVS VENT SYS FANS	0.85							20.27	12.56	20.27	12.56	20.27	12.56
38	CONTAINMENT HYDROGEN RECOMBINER SYSTEM	0.85												
39	CONTROL EQIP ROOM SUPPLY UNIT HEATING COILS	1												
40	SERVICE WATER SELF-CLEANING STRAINERS	0.85							0.81	0.50	0.81	0.50	0.81	0.50
41	STANDBY LIQUID CONTROL PUMPS	0.85							32.43	20.10	32.43	20.10	32.43	20.10
42	RESERVED FOR FUTURE USE	1												
43	RESERVED FOR FUTURE USE	1												
44	RESERVED FOR FUTURE USE	1												
45	RESERVED FOR FUTURE USE	1												
46	480 V POWER SUPPLY TO CLASS 1E CHILLER PANELS	0.85							4.00	2.48	4.00	2.48	4.00	2.48
47	TRAVELING SCREENS	0.85							4.05	2.51	4.05	2.51	4.05	2.51
48	ECCS JOCKEY PUMPS	0.85							8.11	5.03	8.11	5.03	8.11	5.03
49	MOTOR DRIVEN DIESEL GENERATOR FUEL OIL STANDBY PUMPS	0.85							1.62	1.01	1.62	1.01	1.62	1.01
50	STANDBY LIQUID CONTROL PUMP ROOM DUCT HEATERS	1												
51	480 V POWER SUPPLY TO HYDROGEN AND OXYGEN ANALYZER PANELS	0.85							1.00	0.62	1.00	0.62	1.00	0.62
52	250 V DC BATTERY ROOM DUCT HEATERS	1												
53	125 V DC DIESEL AREA BATTERY ROOM DUCT HEATERS	1							21.00		21.00		21.00	
54	HPCI PUMP ROOM DUCT HEATER	1												
55	RCIC PUMP ROOM DUCT HEATER	1							7.00		7.00		7.00	
56	250 V DC BATTERY ROOM DUCT HEATER	1							8.00		8.00		8.00	
57	CLASS 1E PANEL ROOM WATER CHILLERS	0.886							198.00	103.62	198.00	103.62	198.00	103.62
58	CLASS 1E PANEL ROOM CHILLED WATER	0.85							32.43	20.10	32.43	20.10	32.43	20.10
59	CLASS 1E PANEL ROOM SUPPLY & RETURN AIR FANS	0.85							60.82	37.69	60.82	37.69	60.82	37.69
60	CLASS 1E PANEL ROOM ELECTRIC HEATERS	1							100.00		100.00		100.00	
61	BATTERY ROOM EXHAUST FANS	0.85							0.81	0.50	0.81	0.50	0.81	0.50
62	BATTERY ROOM DUCT HEATERS	1												
63	H_2/O_2 ANALYZER HEAT TRACING PANELS	1												
64	RESERVED FOR FUTURE USE	1												
65	RESERVED FOR FUTURE USE	1												

			Standby Diesel Generator A						Standby Diesel Generator B					
			<10 MIN		10-60 MIN		>60 MIN		<10 MIN		10-60 MIN		>60 MIN	
Item	DESCRIPTION	PF	KW	KVAR	KW	KVAR	KW	KVAR	KW	KVAR	KW	KVAR	KW	KVAR
66	RESERVED FOR FUTURE USE	1												
67	RESERVED FOR FUTURE USE	1												
68	RESERVED FOR FUTURE USE	1												
69	RESERVED FOR FUTURE USE	1												
70	RESERVED FOR FUTURE USE	1												

			Standby Diesel Generator A						Standby Diesel Generator B					
			<10 MIN		10-60 MIN		>60 MIN		<10 MIN		10-60 MIN		>60 MIN	
Item	DESCRIPTION	PF	KW	KVAR	KW	KVAR	KW	KVAR	KW	KVAR	KW	KVAR	KW	KVAR
	NON-CLASS 1E LOADS													
	See Note 11													
71	TURBINE GENERATOR TURNING GEAR OIL	0.85									32.00	19.83	32.00	19.83
72	STANDBY LIQUID CONTROL SOLUTION OPERATING HEATER	1												
73	DRYWELL COOLING UNIT FANS	0.85												
74	RADWASTE EXHAUST FANS	0.85												
75	ESSENTIAL PLANT LIGHTING	0.9									37.40	18.11	37.40	18.11
76	CRD WATER PUMPS	0.85												
77	TURBINE BUILDING BATTERY ROOM EXHAUST FANS	0.85												
78	TURBINE GENERATOR AUX BEARING LIFT PUMPS 9 - 5HP EACH AND	0.85									2.43	1.51	2.43	1.51
	TURNING GEAR - 60 HP										85.14	52.77	85.14	52.77
79	EMERGENCY INSTRUMENT AIR COMPRESSOR	0.85												
80	RADWASTE SUPPLY FANS	0.85												
81	REACTOR BUILDING SUPPLY AIR HANDLING UNITS	0.85												
82	REACTOR BUILDING EXHAUST FANS	0.85												
83	RADWASTE TANK VENT FILTER FANS	0.85									6.08	3.77	6.08	3.77
84	TURBINE BUILDING BATTERY ROOM SUPPLY FANS	0.85									4.05	2.51	4.05	2.51
85	RADWASTE TANK VENT FILTER HEATING	1									3.60		3.60	
86	CHEMICAL LAB EXHAUST FANS	0.85									16.22	10.05	16.22	10.05
87	DIESEL GENERATOR STARTING AIR COMPRESSORS	0.85									12.16	7.54	12.16	7.54
88	REACTOR AUX COOLING SYSTEM PUMPS	0.85												
89	125-V DC BATTERY CHARGERS	0.6									114.00	152.00	114.00	152.00
90	125-V DC BATTERY CHARGERS	0.6									38.00	50.67	38.00	50.67
91	250-V DC BATTERY CHARGERS	0.6									57.00	76.00	57.00	76.00
92	STANDBY LIQUID CONTROL SOL MIXING HEATER	1												
93	RFPT AUX LUBE OIL PUMP (NOTE 12) &	0.85									21.49	13.32	21.49	13.32
	TURNING GEAR MOTORS													
94	RESERVED FOR FUTURE USE	1												
95	208 V/120 V AC XFMRS TO DIST PANELS	0.85									15.00	9.30	15.00	9.30
96	REACTOR BUILDING FLOOR DRAIN SUMP	0.85												
97	DRYWELL EQUIP DRAIN SUMP PUMPS	0.85									4.05	2.51	4.05	2.51
98	DRYWELL FLOOR DRAIN SUMP PUMPS	0.85									4.05	2.51	4.05	2.51

			Standby Diesel Generator A						Standby Diesel Generator B					
			<10 MIN		10-60 MIN		>60 MIN		<10 MIN		10-60 MIN		>60 MIN	
Item	DESCRIPTION	PF	KW	KVAR	KW	KVAR	KW	KVAR	KW	KVAR	KW	KVAR	KW	KVAR
99	POWER SUPPLY FOR UNIT VENT RADIATION MONITORING SYSTEMS	0.85									3.50	2.17	3.50	2.17
100	POWER SUPPLY FOR DLD RADIATION MONITORING SYSTEMS	0.85												
101	TURBINE GENERATOR MAIN SEAL OIL PUMP	0.85									16.22	10.05	16.22	10.05
102	TURBINE GENERATOR RECIRC SEAL OIL PUMP	0.85									6.08	3.77	6.08	3.77
103	TURBINE GENERATOR SEAL OIL VACUUM	0.85									2.43	1.51	2.43	1.51
104	RAWASTE + 24V DC BATTERY ROOM DUCT HEATER	1												
105	CONDENSATE STORAGE TANK HEAT TRACING (SEE NOTE 26)	1												
106	TSC SUPPLY SYSTEM FAN	0.85												
107	TSC SUPPLY SYSTEM HEATING COIL	1												
108	TSC EMERGENCY FILTER FAN	0.85												
109	TSC EMERGENCY FILTER HTG COIL	1												
110	STEAM TUNNEL UNIT COOLERS	0.85									16.00	9.92	16.00	9.92
111	TURBINE BUILDING BATTERY ROOM SUPPLY FAN & HTG COIL	1												
112	TURBINE BUILDING COMPARTMENT EXHAUST FANS	0.85												
113	CONTROL AREA 125 V DC BATTERY ROOM DUCT HEATER	1												
114	REMOTE SHUTDOWN PANEL ROOM SUPPLY	0.85												
115	REMOTE SHUTDOWN PANEL ROOM HEATING COIL	1												
116	PLANT LEAK DETECTION SYSTEM HEAT TRACING PANEL (SEE NOTE 26)	1												
117	UNIT VENT RMS HEAT TRACING PANEL	1												
118	POST ACCIDENT SAMPLING SYS HEAT TRACING PANEL	1												
119	ELECTRIC UNIT HEATERS	1												
120	TSC ELECTRIC PAN HUMIDIFIER (NOTE 26)	0.85												
121	WING AREA EXHAUST FANS	0.85												
122	WING AREA SUPPLY FANS	0.85												
123	SPDS UPS	1												
	KW								4053.22	2053.36	4012.57	2256	4077.44	2296.45
	KVAR								2053.36		2256.25		2296.45	
	KVA								4543.66		4603.41		4679.65	

			Standby Diesel Generator A						Standby Diesel Generator B					
			<10 MIN		10-60 MIN		>60 MIN		<10 MIN		10-60 MIN		>60 MIN	
Item	DESCRIPTION	PF	KW	KVAR	KW	KVAR	KW	KVAR	KW	KVAR	KW	KVAR	KW	KVAR
	PF								0.89		0.87		0.87	

			Standby Diesel Generator C						Standby Diesel Generator D					
			<10 MIN		10-60 MIN		>60 MIN		<10 MIN		10-60 MIN		>60 MIN	
Item	DESCRIPTION	PF	KW	KVAR	KW	KVAR	KW	KVAR	KW	KVAR	KW	KVAR	KW	KVAR
	CLASS 1E LOADS													
1	REACTOR CORE SPRAY PUMPS (Note 8)	0.91	525.41	239.38	525.41	239.38	525.41	239.38	525.41	239.38	525.41	239.38	525.41	239.38
2	RHR PUMPS (Note 8)	0.89	1002.69	513.69					1002.69	513.69				
3	SAFETY AUX. CLG. SYS. PUMPS (Note 8)	0.909	420.62	192.86	420.62	192.86	420.62	192.86	420.62	192.86	420.62	192.86	420.62	192.86
4	CORE SPRAY PMP. RM. CLR. UNIT	0.85	12.16	7.54	12.16	7.54	12.16	7.54	12.16	7.54	12.16	7.54	12.16	7.54
5	MOTOR OPERATED VALVES	0.4	14.81	33.93	14.81	33.93	14.81	33.93	14.81	33.93	14.81	33.93	14.81	33.93
6	SWGR. RM. UNIT CLR. FANS	0.85	20.27	12.56	20.27	12.56	20.27	12.56	20.27	12.56	20.27	12.56	20.27	12.56
7	INTAKE STRUCTURE SUPPLY FANS	0.85	32.43	20.10	32.43	20.10	32.43	20.10	32.43	20.10				
8	INTAKE STRUCTURE TRAVELING SCREENS AREA FANS	0.85												
9	RHR PUMP RM UNIT COOLER FANS	0.85	16.22	10.05					16.22	10.05				
10	RCIC PUMP RM. UNIT COOLERS	0.85												
11	HPCI PUMP RM UNIT COOLERS	0.85												
12	125-V DC BATTERY CHARGERS	0.6	113.85	151.80	113.85	151.80	113.85	151.80	113.85	151.80	113.85	151.80	113.85	151.80
13	DIESEL AREA BATTERY ROOM EXHAUST FANS	0.85	0.81	0.50	0.81	0.50	0.81	0.50	0.81	0.50	0.81	0.50	0.81	0.50
14	DIESEL FUEL OIL TRANSFER PUMPS	0.85					4.05	2.51					4.05	2.51
15	STATION SERVICE WATER PUMPS (Note 8)	0.875	634.22	350.90	634.22	350.90	634.22	350.90	634.22	350.90	634.22	350.90	634.22	350.90
16	RB FRVS RECIRCULATION SYSTEM FANS	0.85	121.63	75.38	121.63	75.38	121.63	75.38	121.63	75.38	121.63	75.38	121.63	75.38
17	CONTROL RM SUPPLY FANS	0.85	32.43	20.10	32.43	20.10	32.43	20.10	32.43	20.10				
18	208Y/120-V AC XFMRS TO POWER DIST PANELS	0.85	37.50	23.24	37.50	23.24	37.50	23.24	37.50	23.24	37.50	23.24	37.50	23.24
19	RESERVED FOR FUTURE USE	1.00												
20	INTAKE STRUCTURE EXHAUST FANS	0.85	32.43	20.10	32.43	20.10	32.43	20.10	32.43	20.10				
21	CONTROL ROOM CHILLED WATER CIRCULATING PUMPS	0.85	48.65	30.15	48.65	30.15	48.65	30.15	48.65	30.15				
22	CNTRL RM SUPPLY UNIT HTG COILS	1	90.00		90.00		90.00		90.00					
23	CONTROL ROOM WATER CHILLERS (Note 10)	0.878	506.00	275.86	506.00	275.86	506.00	275.86	506.00	275.86				
24	DIESEL GEN RM RECIRC SYSTEMS FANS	0.85	202.72	125.63	202.72	125.63	202.72	125.63	202.72	125.63	202.72	125.63	202.72	125.63
25	PRIMARY CONTAINMENT INSTRUMENT GAS COMPRESSORS	0.85			12.16	7.54	12.16	7.54			12.16	7.54	12.16	7.54
26	BATTERY CHARGERS, 250-V DC	0.6												
27	CONTROL AREA BATTERY ROOM EXHAUST FANS	0.85	4.05	2.51	4.05	2.51	4.05	2.51	4.05	2.51	4.05	2.51	4.05	2.51
28	RB FRVS RECIRC UNIT HEATING COILS	1	100.00		100.00		100.00		100.00		100.00		100.00	
29	TRAVELING SCREEN SPRAY WATER BOOSTER PUMPS	0.85	16.22	10.05	16.22	10.05	16.22	10.05	16.22	10.05	16.22	10.05	16.22	10.05
30	RB FRVS VENT UNIT HEATING COILS	1												
31	CONTROL ROOM SUPPLY SYSTEM RETURN	0.85	24.33	15.08	24.33	15.08	24.33	15.08	24.33	15.08				
32	CONTROL ROOM EMERGENCY FILTER FANS	0.85	20.27	12.56	20.27	12.56	20.27	12.56	20.27	12.56				
33	SAFETY AUX COOLING SYSTEM UNIT COOLERS	0.85	12.16	7.54	12.16	7.54	12.16	7.54	12.16	7.54	12.16	7.54	12.16	7.54
34	FUEL POOL COOLING PUMPS	0.85												

			Standby Diesel Generator C						Standby Diesel Generator D					
			<10 MIN		10-60 MIN		>60 MIN		<10 MIN		10-60 MIN		>60 MIN	
Item	DESCRIPTION	PF	KW	KVAR	KW	KVAR	KW	KVAR	KW	KVAR	KW	KVAR	KW	KVAR
35	CONTROL ROOM EMERGENCY FILTER UNIT ELECTRIC HEATING COILS	1	13.00		13.00		13.00		13.00		13.00		13.00	
36	CONTROL EQUIPMENT ROOM AIR SUPPLY	0.85	202.72	125.63	202.72	125.63	202.72	125.63	202.72	125.63				
37	RB FRVS VENT SYS FANS	0.85												
38	CONTAINMENT HYDROGEN RECOMBINER SYSTEM	0.85											140.00	86.76
39	CONTROL EQIP ROOM SUPPLY UNIT HEATING COILS	1	100.00		100.00		100.00		100.00		100.00		100.00	
40	SERVICE WATER SELF-CLEANING STRAINERS	0.85	0.81	0.50	0.81	0.50	0.81	0.50	0.81	0.50	0.81	0.50	0.81	0.50
41	STANDBY LIQUID CONTROL PUMPS	0.85												
42	RESERVED FOR FUTURE USE	1												
43	RESERVED FOR FUTURE USE	1												
44	RESERVED FOR FUTURE USE	1												
45	RESERVED FOR FUTURE USE	1												
46	480 V POWER SUPPLY TO CLASS 1E CHILLER PANELS	0.85	4.00	2.48	4.00	2.48	4.00	2.48	4.00	2.48	4.00	2.48	4.00	2.48
47	TRAVELING SCREENS	0.85	4.05	2.51	4.05	2.51	4.05	2.51	4.05	2.51	4.05	2.51	4.05	2.51
48	ECCS JOCKEY PUMPS	0.85	8.11	5.03	8.11	5.03	8.11	5.03	8.11	5.03	8.11	5.03	8.11	5.03
49	MOTOR DRIVEN DIESEL GENERATOR FUEL OIL STANDBY PUMPS	0.85	1.62	1.01	1.62	1.01	1.62	1.01	1.62	1.01	1.62	1.01	1.62	1.01
50	STANDBY LIQUID CONTROL PUMP ROOM DUCT HEATERS	1									45.00		45	
51	480 V POWER SUPPLY TO HYDROGEN AND OXYGEN ANALYZER PANELS	0.85												
52	250 V DC BATTERY ROOM DUCT HEATERS	1												
53	125 V DC DIESEL AREA BATTERY ROOM DUCT HEATERS	1	21.00		21.00		21.00		21.00		21.00		21.00	
54	HPCI PUMP ROOM DUCT HEATER	1												
55	RCIC PUMP ROOM DUCT HEATER	1												
56	250 V DC BATTERY ROOM DUCT HEATER	1												
57	CLASS 1E PANEL ROOM WATER CHILLERS	0.886												
58	CLASS 1E PANEL ROOM CHILLED WATER	0.85												
59	CLASS 1E PANEL ROOM SUPPLY & RETURN AIR FANS	0.85												
60	CLASS 1E PANEL ROOM ELECTRIC HEATERS	1												
61	BATTERY ROOM EXHAUST FANS	0.85												
62	BATTERY ROOM DUCT HEATERS	1	14.00		14.00		14.00		14.00		14.00		14.00	
63	H_2/O_2 ANALYZER HEAT TRACING PANELS	1	15.00		15.00		15.00		15.00		15.00		15.00	
64	RESERVED FOR FUTURE USE	1												
65	RESERVED FOR FUTURE USE	1												

			Standby Diesel Generator C						Standby Diesel Generator D					
			<10 MIN		10-60 MIN		>60 MIN		<10 MIN		10-60 MIN		>60 MIN	
Item	DESCRIPTION	PF	KW	KVAR	KW	KVAR	KW	KVAR	KW	KVAR	KW	KVAR	KW	KVAR
66	RESERVED FOR FUTURE USE	1												
67	RESERVED FOR FUTURE USE	1												
68	RESERVED FOR FUTURE USE	1												
69	RESERVED FOR FUTURE USE	1												
70	RESERVED FOR FUTURE USE	1												

			Standby Diesel Generator C						Standby Diesel Generator D					
			<10 MIN		10-60 MIN		>60 MIN		<10 MIN		10-60 MIN		>60 MIN	
Item	DESCRIPTION	PF	KW	KVAR	KW	KVAR	KW	KVAR	KW	KVAR	KW	KVAR	KW	KVAR
	NON-CLASS 1E LOADS													
	See Note 11													
71	TURBINE GENERATOR TURNING GEAR OIL	0.85												
72	STANDBY LIQUID CONTROL SOLUTION OPERATING HEATER	1												
73	DRYWELL COOLING UNIT FANS	0.85												
74	RADWASTE EXHAUST FANS	0.85												
75	ESSENTIAL PLANT LIGHTING	0.9			145.90	70.66	145.90	70.66			93.50	45.28	93.50	45.28
76	CRD WATER PUMPS	0.85			202.72	125.63	202.72	125.63						
77	TURBINE BUILDING BATTERY ROOM EXHAUST FANS	0.85												
78	TURBINE GENERATOR AUX BEARING LIFT PUMPS 9 - 5HP EACH AND	0.85												
	TURNING GEAR - 60 HP													
79	EMERGENCY INSTRUMENT AIR COMPRESSOR	0.85												
80	RADWASTE SUPPLY FANS	0.85												
81	REACTOR BUILDING SUPPLY AIR HANDLING UNITS	0.85												
82	REACTOR BUILDING EXHAUST FANS	0.85												
83	RADWASTE TANK VENT FILTER FANS	0.85												
84	TURBINE BUILDING BATTERY ROOM SUPPLY FANS	0.85												
85	RADWASTE TANK VENT FILTER HEATING	1												
86	CHEMICAL LAB EXHAUST FANS	0.85												
87	DIESEL GENERATOR STARTING AIR COMPRESSORS	0.85			12.16	7.54	12.16	7.54			12.16	7.54	12.16	7.54
88	REACTOR AUX COOLING SYSTEM PUMPS	0.85												
89	125-V DC BATTERY CHARGERS	0.6												
90	125-V DC BATTERY CHARGERS	0.6			38.00	50.67	38.00	50.67			38.00	50.67	38.00	50.67
91	250-V DC BATTERY CHARGERS	0.6												
92	STANDBY LIQUID CONTROL SOL MIXING HEATER	1									40.00		40.00	
93	RFPT AUX LUBE OIL PUMP (NOTE 12) &	0.85			21.49	13.32	21.49	13.32						
	TURNING GEAR MOTORS													
94	RESERVED FOR FUTURE USE	1												
95	208 V/120 V AC XFMRS TO DIST PANELS	0.85			45.00	27.89	45.00	27.89			15.00	9.30	15.00	9.30
96	REACTOR BUILDING FLOOR DRAIN SUMP	0.85			8.11	5.03	8.11	5.03			8.11	5.03	8.11	5.03
97	DRYWELL EQUIP DRAIN SUMP PUMPS	0.85												
98	DRYWELL FLOOR DRAIN SUMP PUMPS	0.85												

			Standby Diesel Generator C						Standby Diesel Generator D					
			<10 MIN		10-60 MIN		>60 MIN		<10 MIN		10-60 MIN		>60 MIN	
Item	DESCRIPTION	PF	KW	KVAR	KW	KVAR	KW	KVAR	KW	KVAR	KW	KVAR	KW	KVAR
99	POWER SUPPLY FOR UNIT VENT RADIATION MONITORING SYSTEMS	0.85			3.50	2.17	3.50	2.17						
100	POWER SUPPLY FOR DLD RADIATION MONITORING SYSTEMS	0.85												
101	TURBINE GENERATOR MAIN SEAL OIL PUMP	0.85												
102	TURBINE GENERATOR RECIRC SEAL OIL PUMP	0.85												
103	TURBINE GENERATOR SEAL OIL VACUUM	0.85												
104	RAWASTE + 24V DC BATTERY ROOM DUCT HEATER	1												
105	CONDENSATE STORAGE TANK HEAT TRACING (SEE NOTE 26)	1			12.00		12.00							
106	TSC SUPPLY SYSTEM FAN	0.85			20.00	12.39	20.00	12.39						
107	TSC SUPPLY SYSTEM HEATING COIL	1			30.00		30.00							
108	TSC EMERGENCY FILTER FAN	0.85			20.00	12.39	20.00	12.39						
109	TSC EMERGENCY FILTER HTG COIL	1			13.00		13.00							
110	STEAM TUNNEL UNIT COOLERS	0.85									16.00	9.92	16.00	9.92
111	TURBINE BUILDING BATTERY ROOM SUPPLY FAN & HTG COIL	1												
112	TURBINE BUILDING COMPARTMENT EXHAUST FANS	0.85												
113	CONTROL AREA 125 V DC BATTERY ROOM DUCT HEATER	1												
114	REMOTE SHUTDOWN PANEL ROOM SUPPLY	0.85												
115	REMOTE SHUTDOWN PANEL ROOM HEATING COIL	1												
116	PLANT LEAK DETECTION SYSTEM HEAT TRACING PANEL (SEE NOTE 26)	1									12.00		12.00	
117	UNIT VENT RMS HEAT TRACING PANEL	1												
118	POST ACCIDENT SAMPLING SYS HEAT TRACING PANEL	1			15.00		15.00							
119	ELECTRIC UNIT HEATERS	1			24.00		24.00							
120	TSC ELECTRIC PAN HUMIDIFIER (NOTE 26)	0.85			12.97	8.04	12.97	8.04						
121	WING AREA EXHAUST FANS	0.85									16.00	9.92	16.00	9.92
122	WING AREA SUPPLY FANS	0.85									40.00	24.79	40.00	24.79
123	SPDS UPS	1					60.00							
	KW		4426.20	2288.68	4043.31	2108.21	4107.37	2110.72	4426.20	2288.68	2765.96	1415.33	2910.01	1504.60
	KVAR		2288.68		2108.21		2110.72		2288.68		1415.33		1504.60	
	KVA		4982.91		4559.92		4617.96		4982.91		3107.04		3275.98	

			Standby Diesel Generator C						Standby Diesel Generator D					
			<10 MIN		10-60 MIN		>60 MIN		<10 MIN		10-60 MIN		>60 MIN	
Item	DESCRIPTION	PF	KW	KVAR	KW	KVAR	KW	KVAR	KW	KVAR	KW	KVAR	KW	KVAR
	PF		0.89		0.89		0.89		0.89		0.89		0.89	

			Standby Diesel Generator A						Standby Diesel Generator B					
			<10 MIN		10-60 MIN		>60 MIN		<10 MIN		10-60 MIN		>60 MIN	
Item	DESCRIPTION	PF	KW	KVAR	KW	KVAR	KW	KVAR	KW	KVAR	KW	KVAR	KW	KVAR
	CLASS 1E LOADS													
1	REACTOR CORE SPRAY PUMPS (Note 8)	0.91	525.41	239.38										
2	RHR PUMPS (Note 8)	0.89	1002.69	513.69	1002.69	513.69	1002.69	513.69						
3	SAFETY AUX. CLG. SYS. PUMPS (Note 8)	0.909	420.62	192.86	420.62	192.86	420.62	192.86						
4	CORE SPRAY PMP. RM. CLR. UNIT	0.85	12.16	7.54										
5	MOTOR OPERATED VALVES	0.4	14.81	33.93	14.81	33.93	14.81	33.93						
6	SWGR. RM. UNIT CLR. FANS	0.85	20.27	12.56	20.27	12.56	20.27	12.56						
7	INTAKE STRUCTURE SUPPLY FANS	0.85	32.43	20.10	32.43	20.10	32.43	20.10						
8	INTAKE STRUCTURE TRAVELING SCREENS AREA FANS	0.85	6.08	3.77	6.08	3.77	6.08	3.77						
9	RHR PUMP RM UNIT COOLER FANS	0.85	16.22	10.05	16.22	10.05	16.22	10.05						
10	RCIC PUMP RM. UNIT COOLERS	0.85												
11	HPCI PUMP RM UNIT COOLERS	0.85	12.16	7.54	12.16	7.54	12.16	7.54						
12	125-V DC BATTERY CHARGERS	0.6	75.90	101.20	75.90	101.20	75.90	101.20						
13	DIESEL AREA BATTERY ROOM EXHAUST FANS	0.85	0.81	0.50	0.81	0.50	0.81	0.50						
14	DIESEL FUEL OIL TRANSFER PUMPS	0.85					4.05	2.51						
15	STATION SERVICE WATER PUMPS (Note 8)	0.875	634.22	350.90	634.22	350.90	634.22	350.90						
16	RB FRVS RECIRCULATION SYSTEM FANS	0.85	243.26	150.76	243.26	150.76	243.26	150.76						
17	CONTROL RM SUPPLY FANS	0.85												
18	208Y/120-V AC XFMRS TO POWER DIST PANELS	0.85	37.50	23.24	37.50	23.24	37.50	23.24						
19	RESERVED FOR FUTURE USE	1												
20	INTAKE STRUCTURE EXHAUST FANS	0.85	32.43	20.10	32.43	20.10	32.43	20.10						
21	CONTROL ROOM CHILLED WATER CIRCULATING PUMPS	0.85												
22	CNTRL RM SUPPLY UNIT HTG COILS	1												
23	CONTROL ROOM WATER CHILLERS (Note 10)	0.878												
24	DIESEL GEN RM RECIRC SYSTEMS FANS	0.85	202.72	125.63	202.72	125.63	202.72	125.63						
25	PRIMARY CONTAINMENT INSTRUMENT GAS COMPRESSORS	0.85												
26	BATTERY CHARGERS, 250-V DC	0.6	19.00	25.33	19.00	25.33	19.00	25.33						
27	CONTROL AREA BATTERY ROOM EXHAUST	0.85												
28	RB FRVS RECIRC UNIT HEATING COILS	1	200.00		200.00		200.00							
29	TRAVELING SCREEN SPRAY WATER BOOSTER PUMPS	0.85	16.22	10.05	16.22	10.05	16.22	10.05						
30	RB FRVS VENT UNIT HEATING COILS	1	32.00		32.00		32.00							
31	CONTROL ROOM SUPPLY SYSTEM RETURN FANS	0.85												
32	CONTROL ROOM EMERGENCY FILTER FANS	0.85												
33	SAFETY AUX COOLING SYSTEM UNIT COOLERS	0.85												
34	FUEL POOL COOLING PUMPS	0.85					60.82	37.69						

			Standby Diesel Generator A						Standby Diesel Generator B					
			<10 MIN		10-60 MIN		>60 MIN		<10 MIN		10-60 MIN		>60 MIN	
Item	DESCRIPTION	PF	KW	KVAR	KW	KVAR	KW	KVAR	KW	KVAR	KW	KVAR	KW	KVAR
35	CONTROL ROOM EMERGENCY FILTER UNIT ELECTRIC HEATING COILS	1												
36	CONTROL EQUIPMENT ROOM AIR SUPPLY FANS	0.85												
37	RB FRVS VENT SYS FANS	0.85	20.27	12.56	20.27	12.56	20.27	12.56						
38	CONTAINMENT HYDROGEN RECOMBINER SYSTEM	0.85												
39	CONTROL EQIP ROOM SUPPLY UNIT HEATING COILS	1												
40	SERVICE WATER SELF-CLEANING STRAINERS	0.85	0.81	0.50	0.81	0.50	0.81	0.50						
41	STANDBY LIQUID CONTROL PUMPS	0.85	32.43	20.10	32.43	20.10	32.43	20.10						
42	RESERVED FOR FUTURE USE	1												
43	RESERVED FOR FUTURE USE	1												
44	RESERVED FOR FUTURE USE	1												
45	RESERVED FOR FUTURE USE	1												
46	480 V POWER SUPPLY TO CLASS 1E CHILLER PANELS	0.85	4.00	2.48	4.00	2.48	4.00	2.48						
47	TRAVELING SCREENS	0.85	4.05	2.51	4.05	2.51	4.05	2.51						
48	ECCS JOCKEY PUMPS	0.85	8.11	5.03	8.11	5.03	8.11	5.03						
49	MOTOR DRIVEN DIESEL GENERATOR FUEL OIL STANDBY PUMPS	0.85	1.62	1.01	1.62	1.01	1.62	1.01						
50	STANDBY LIQUID CONTROL PUMP ROOM DUCT HEATERS	1			45.00		45.00							
51	480 V POWER SUPPLY TO HYDROGEN AND OXYGEN ANALYZER PANELS	0.85	1.00	0.62	1.00	0.62	1.00	0.62						
52	250 V DC BATTERY ROOM DUCT HEATERS	1	10.00		10.00		10.00							
53	125 V DC DIESEL AREA BATTERY ROOM DUCT HEATERS	1	21.00		21.00		21.00							
54	HPCI PUMP ROOM DUCT HEATER	1	11.00		11.00		11.00							
55	RCIC PUMP ROOM DUCT HEATER	1												
56	250 V DC BATTERY ROOM DUCT HEATER	1												
57	CLASS 1E PANEL ROOM WATER CHILLERS	0.886	198.00	103.62	198.00	103.62	198.00	103.62						
58	CLASS 1E PANEL ROOM CHILLED WATER PUMPS	0.85	32.43	20.10	32.43	20.10	32.43	20.10						
59	CLASS 1E PANEL ROOM SUPPLY & RETURN AIR FANS	0.85	60.82	37.69	60.82	37.69	60.82	37.69						
60	CLASS 1E PANEL ROOM ELECTRIC HEATERS	1	100.00		100.00		100.00							
61	BATTERY ROOM EXHAUST FANS	0.85	0.81	0.50	0.81	0.50	0.81	0.50						
62	BATTERY ROOM DUCT HEATERS	1												
63	H2/O2 ANALYZER HEAT TRACING PANELS	1												
64	RESERVED FOR FUTURE USE	1												

			Standby Diesel Generator A						Standby Diesel Generator B					
			<10 MIN		10-60 MIN		>60 MIN		<10 MIN		10-60 MIN		>60 MIN	
Item	DESCRIPTION	PF	KW	KVAR	KW	KVAR	KW	KVAR	KW	KVAR	KW	KVAR	KW	KVAR
65	RESERVED FOR FUTURE USE	1												
66	RESERVED FOR FUTURE USE	1												
67	RESERVED FOR FUTURE USE	1												
68	RESERVED FOR FUTURE USE	1												
69	RESERVED FOR FUTURE USE	1												
70	RESERVED FOR FUTURE USE	1												

			Standby Diesel Generator A						Standby Diesel Generator B					
			<10 MIN		10-60 MIN		>60 MIN		<10 MIN		10-60 MIN		>60 MIN	
Item	DESCRIPTION	PF	KW	KVAR	KW	KVAR	KW	KVAR	KW	KVAR	KW	KVAR	KW	KVAR
	NON-CLASS 1E LOADS													
	See Note 11													
71	TURBINE GENERATOR TURNING GEAR OIL PUMP	0.85												
72	STANDBY LIQUID CONTROL SOLUTION OPERATING HEATER	1			10.00		10.00							
73	DRYWELL COOLING UNIT FANS	0.85												
74	RADWASTE EXHAUST FANS	0.85												
75	ESSENTIAL PLANT LIGHTING	0.9			52.40	25.38	52.40	25.38						
76	CRD WATER PUMPS	0.85												
77	TURBINE BUILDING BATTERY ROOM EXHAUST FANS	0.85			2.43	1.51	2.43	1.51						
78	TURBINE GENERATOR AUX BEARING LIFT PUMPS 9 - 5HP EACH AND	0.85												
	TURNING GEAR - 60 HP													
79	EMERGENCY INSTRUMENT AIR COMPRESSOR	0.85												
80	RADWASTE SUPPLY FANS	0.85												
81	REACTOR BUILDING SUPPLY AIR HANDLING UNITS	0.85												
82	REACTOR BUILDING EXHAUST FANS	0.85												
83	RADWASTE TANK VENT FILTER FANS	0.85			6.08	3.77	6.08	3.77						
84	TURBINE BUILDING BATTERY ROOM SUPPLY FANS	0.85			4.05	2.51	4.05	2.51						
85	RADWASTE TANK VENT FILTER HEATING COILS	1			3.60		3.60							
86	CHEMICAL LAB EXHAUST FANS	0.85			16.22	10.05	16.22	10.05						
87	DIESEL GENERATOR STARTING AIR COMPRESSORS	0.85			12.16	7.54	12.16	7.54						
88	REACTOR AUX COOLING SYSTEM PUMPS	0.85												
89	125-V DC BATTERY CHARGERS	0.6			114.00	152.00	114.00	152.00						
90	125-V DC BATTERY CHARGERS	0.6			38.00	50.67	38.00	50.67						
91	250-V DC BATTERY CHARGERS	0.6												
92	STANDBY LIQUID CONTROL SOL MIXING	1												
93	RFPT AUX LUBE OIL PUMP (NOTE 12) &	0.85												
	TURNING GEAR MOTORS				21.49	13.32	21.49	13.32						
94	RESERVED FOR FUTURE USE	1												
95	208 V/120 V AC XFMRS TO DIST PANELS	0.85			30.00	18.59	30.00	18.59						
96	REACTOR BUILDING FLOOR DRAIN SUMP PUMPS	0.85												
97	DRYWELL EQUIP DRAIN SUMP PUMPS	0.85												
98	DRYWELL FLOOR DRAIN SUMP PUMPS	0.85			4.05	2.51	4.05	2.51						

			Standby Diesel Generator A						Standby Diesel Generator B					
			<10 MIN		10-60 MIN		>60 MIN		<10 MIN		10-60 MIN		>60 MIN	
Item	DESCRIPTION	PF	KW	KVAR	KW	KVAR	KW	KVAR	KW	KVAR	KW	KVAR	KW	KVAR
99	POWER SUPPLY FOR UNIT VENT RADIATION MONITORING SYSTEMS	0.85			4.05	2.51	4.05	2.51						
100	POWER SUPPLY FOR DLD RADIATION MONITORING SYSTEMS	0.85			3.50	2.17	3.50	2.17						
101	TURBINE GENERATOR MAIN SEAL OIL PUMP	0.85												
102	TURBINE GENERATOR RECIRC SEAL OIL PUMP	0.85												
103	TURBINE GENERATOR SEAL OIL VACUUM PUMP	0.85												
104	RAWASTE + 24V DC BATTERY ROOM DUCT HEATER	1												
105	CONDENSATE STORAGE TANK HEAT TRACING (SEE NOTE 26)	1			5.00		5.00							
106	TSC SUPPLY SYSTEM FAN	0.85												
107	TSC SUPPLY SYSTEM HEATING COIL	1												
108	TSC EMERGENCY FILTER FAN	0.85												
109	TSC EMERGENCY FILTER HTG COIL	1												
110	STEAM TUNNEL UNIT COOLERS	0.85												
111	TURBINE BUILDING BATTERY ROOM SUPPLY FAN	1			50.00		50.00							
112	TURBINE BUILDING COMPARTMENT EXHAUST FA	0.85												
113	CONTROL AREA 125 V DC BATTERY ROOM DUCT H	1			16.00		16.00							
114	REMOTE SHUTDOWN PANEL ROOM SUPPLY FAN	0.85			4.00	2.48	4.00	2.48						
115	REMOTE SHUTDOWN PANEL ROOM HEATING COIL	1			10.00		10.00							
116	PLANT LEAK DETECTION SYSTEM HEAT TRACING	1												
117	UNIT VENT RMS HEAT TRACING PANEL	1			15.00		15.00							
118	POST ACCIDENT SAMPLING SYS HEAT TRACING P	1												
119	ELECTRIC UNIT HEATERS	1												
120	TSC ELECTRIC PAN HUMIDIFIER (NOTE 26)	0.85												
121	WING AREA EXHAUST FANS	0.85			16.00	9.92	16.00	9.92						
122	WING AREA SUPPLY FANS	0.85			40.00	24.79	40.00	24.79						
123	SPDS UPS	1					60.00							
	KW		4063.28	2055.87	4048.75	2138.66	4173.62	2178.87						
	KVAR		2055.87		2138.66		2178.87							
	KVA		4553.77		4578.89		4708.14							
	PF		0.89		0.88		0.89							

			Standby Diesel Generator C						Standby Diesel Generator D					
			<10 MIN		10-60 MIN		>60 MIN		<10 MIN		10-60 MIN		>60 MIN	
Item	DESCRIPTION	PF	KW	KVAR	KW	KVAR	KW	KVAR	KW	KVAR	KW	KVAR	KW	KVAR
	CLASS 1E LOADS													
1	REACTOR CORE SPRAY PUMPS (Note 8)	0.91	525.41	239.38	525.41	239.38	525.41	239.38	525.41	239.38	525.41	239.38	525.41	239.38
2	RHR PUMPS (Note 8)	0.89	1002.69	513.69					1002.69	513.69				
3	SAFETY AUX. CLG. SYS. PUMPS (Note 8)	0.909	420.62	192.86	420.62	192.86	420.62	192.86	420.62	192.86	420.62	192.86	420.62	192.86
4	CORE SPRAY PMP. RM. CLR. UNIT	0.85	12.16	7.54	12.16	7.54	12.16	7.54	12.16	7.54	12.16	7.54	12.16	7.54
5	MOTOR OPERATED VALVES	0.4	14.81	33.93	14.81	33.93	14.81	33.93	14.81	33.93	14.81	33.93	14.81	33.93
6	SWGR. RM. UNIT CLR. FANS	0.85	20.27	12.56	20.27	12.56	20.27	12.56	20.27	12.56	20.27	12.56	20.27	12.56
7	INTAKE STRUCTURE SUPPLY FANS	0.85	32.43	20.10					32.43	20.10	32.43	20.10	32.43	20.10
8	INTAKE STRUCTURE TRAVELING SCREENS AREA FANS	0.85												
9	RHR PUMP RM UNIT COOLER FANS	0.85	16.22	10.05					16.22	10.05				
10	RCIC PUMP RM. UNIT COOLERS	0.85												
11	HPCI PUMP RM UNIT COOLERS	0.85												
12	125-V DC BATTERY CHARGERS	0.6	113.85	151.80	113.85	151.80	113.85	151.80	113.85	151.80	113.85	151.80	113.85	151.80
13	DIESEL AREA BATTERY ROOM EXHAUST FANS	0.85	0.81	0.50	0.81	0.50	0.81	0.50	0.81	0.50	0.81	0.50	0.81	0.50
14	DIESEL FUEL OIL TRANSFER PUMPS	0.85					4.05	2.51					4.05	2.51
15	STATION SERVICE WATER PUMPS (Note 8)	0.875	634.22	350.90	634.22	350.90	634.22	350.90	634.22	350.90	634.22	350.90	634.22	350.90
16	RB FRVS RECIRCULATION SYSTEM FANS	0.85	121.63	75.38	121.63	75.38	121.63	75.38	121.63	75.38	121.63	75.38	121.63	75.38
17	CONTROL RM SUPPLY FANS	0.85	32.43	20.10	32.43	20.10	32.43	20.10	32.43	20.10				
18	208Y/120-V AC XFMRS TO POWER DIST PANELS	0.85	37.50	23.24	37.50	23.24	37.50	23.24	37.50	23.24	37.50	23.24	37.50	23.24
19	RESERVED FOR FUTURE USE	1												
20	INTAKE STRUCTURE EXHAUST FANS	0.85	32.43	20.10					32.43	20.10	32.43	20.10	32.43	20.10
21	CONTROL ROOM CHILLED WATER CIRCULATING PUMPS	0.85	48.65	30.15	48.65	30.15	48.65	30.15	48.65	30.15				
22	CNTRL RM SUPPLY UNIT HTG COILS	1	90.00		90.00		90.00		90.00					
23	CONTROL ROOM WATER CHILLERS (Note 10)	0.878	506.00	275.86	506.00	275.86	506.00	275.86	506.00	275.86				
24	DIESEL GEN RM RECIRC SYSTEMS FANS	0.85	202.72	125.63	202.72	125.63	202.72	125.63	202.72	125.63	202.72	125.63	202.72	125.63
25	PRIMARY CONTAINMENT INSTRUMENT GAS COMPRESSORS	0.85			12.16	7.54	12.16	7.54			12.16	7.54	12.16	7.54
26	BATTERY CHARGERS, 250-V DC	0.6												
27	CONTROL AREA BATTERY ROOM EXHAUST	0.85	4.05	2.51	4.05	2.51	4.05	2.51	4.05	2.51	4.05	2.51	4.05	2.51
28	RB FRVS RECIRC UNIT HEATING COILS	1	100.00		100.00		100.00		100.00		100.00		100.00	
29	TRAVELING SCREEN SPRAY WATER BOOSTER PUMPS	0.85	16.22	10.05	16.22	10.05	16.22	10.05	16.22	10.05	16.22	10.05	16.22	10.05
30	RB FRVS VENT UNIT HEATING COILS	1												
31	CONTROL ROOM SUPPLY SYSTEM RETURN FANS	0.85	24.33	15.08	24.33	15.08	24.33	15.08	24.33	15.08				
32	CONTROL ROOM EMERGENCY FILTER FANS	0.85	20.27	12.56	20.27	12.56	20.27	12.56	20.27	12.56				
33	SAFETY AUX COOLING SYSTEM UNIT COOLERS	0.85	12.16	7.54	12.16	7.54	12.16	7.54	12.16	7.54	12.16	7.54	12.16	7.54
34	FUEL POOL COOLING PUMPS	0.85												

		Standby Diesel Generator C							Standby Diesel Generator D					
			<10 MIN		10-60 MIN		>60 MIN		<10 MIN		10-60 MIN		>60 MIN	
Item	DESCRIPTION	PF	KW	KVAR	KW	KVAR	KW	KVAR	KW	KVAR	KW	KVAR	KW	KVAR
35	CONTROL ROOM EMERGENCY FILTER UNIT ELECTRIC HEATING COILS	1	13.00		13.00		13.00		13.00		13.00		13.00	
36	CONTROL EQUIPMENT ROOM AIR SUPPLY FANS	0.85	202.72	125.63	202.72	125.63	202.72	125.63	202.72	125.63				
37	RB FRVS VENT SYS FANS	0.85												
38	CONTAINMENT HYDROGEN RECOMBINER SYSTEM	0.85											140.00	86.76
39	CONTROL EQIP ROOM SUPPLY UNIT HEATING COILS	1	100.00		100.00		100.00		100.00					
40	SERVICE WATER SELF-CLEANING STRAINERS	0.85	0.81	0.50	0.81	0.50	0.81	0.50	0.81	0.50	0.81	0.50	0.81	0.50
41	STANDBY LIQUID CONTROL PUMPS	0.85												
42	RESERVED FOR FUTURE USE	1												
43	RESERVED FOR FUTURE USE	1												
44	RESERVED FOR FUTURE USE	1												
45	RESERVED FOR FUTURE USE	1												
46	480 V POWER SUPPLY TO CLASS 1E CHILLER PANELS	0.85	4.00	2.48	4.00	2.48	4.00	2.48	4.00	2.48	4.00	2.48	4.00	2.48
47	TRAVELING SCREENS	0.85	4.05	2.51	4.05	2.51	4.05	2.51	4.05	2.51	4.05	2.51	4.05	2.51
48	ECCS JOCKEY PUMPS	0.85	8.11	5.03	8.11	5.03	8.11	5.03	8.11	5.03	8.11	5.03	8.11	5.03
49	MOTOR DRIVEN DIESEL GENERATOR FUEL OIL STANDBY PUMPS	0.85	1.62	1.01	1.62	1.01	1.62	1.01	1.62	1.01	1.62	1.01	1.62	1.01
50	STANDBY LIQUID CONTROL PUMP ROOM DUCT HEATERS	1									45.00			
51	480 V POWER SUPPLY TO HYDROGEN AND OXYGEN ANALYZER PANELS	0.85												
52	250 V DC BATTERY ROOM DUCT HEATERS	1												
53	125 V DC DIESEL AREA BATTERY ROOM DUCT HEATERS	1	21.00		21.00		21.00		21.00		21.00		21.00	
54	HPCI PUMP ROOM DUCT HEATER	1												
55	RCIC PUMP ROOM DUCT HEATER	1												
56	250 V DC BATTERY ROOM DUCT HEATER	1												
57	CLASS 1E PANEL ROOM WATER CHILLERS	0.886												
58	CLASS 1E PANEL ROOM CHILLED WATER PUMPS	0.85												
59	CLASS 1E PANEL ROOM SUPPLY & RETURN AIR FANS	0.85												
60	CLASS 1E PANEL ROOM ELECTRIC HEATERS	1												
61	BATTERY ROOM EXHAUST FANS	0.85												
62	BATTERY ROOM DUCT HEATERS	1	14.00		14.00		14.00		14.00		14.00		14.00	
63	H2/O2 ANALYZER HEAT TRACING PANELS	1	15.00		15.00		15.00		15.00		15.00		15.00	
64	RESERVED FOR FUTURE USE	1												

		Standby Diesel Generator C							Standby Diesel Generator D					
			<10 MIN		10-60 MIN		>60 MIN		<10 MIN		10-60 MIN		>60 MIN	
Item	DESCRIPTION	PF	KW	KVAR	KW	KVAR	KW	KVAR	KW	KVAR	KW	KVAR	KW	KVAR
65	RESERVED FOR FUTURE USE	1												
66	RESERVED FOR FUTURE USE	1												
67	RESERVED FOR FUTURE USE	1												
68	RESERVED FOR FUTURE USE	1												
69	RESERVED FOR FUTURE USE	1												
70	RESERVED FOR FUTURE USE	1												

			Standby Diesel Generator C						Standby Diesel Generator D					
			<10 MIN		10-60 MIN		>60 MIN		<10 MIN		10-60 MIN		>60 MIN	
Item	DESCRIPTION	PF	KW	KVAR	KW	KVAR	KW	KVAR	KW	KVAR	KW	KVAR	KW	KVAR
	NON-CLASS 1E LOADS													
	See Note 11													
71	TURBINE GENERATOR TURNING GEAR OIL PUMP	0.85												
72	STANDBY LIQUID CONTROL SOLUTION OPERATING HEATER	1												
73	DRYWELL COOLING UNIT FANS	0.85												
74	RADWASTE EXHAUST FANS	0.85												
75	ESSENTIAL PLANT LIGHTING	0.9			93.50	45.28	93.50	45.28			130.90	63.40	130.90	63.40
76	CRD WATER PUMPS	0.85									202.72	125.63	202.72	125.63
77	TURBINE BUILDING BATTERY ROOM EXHAUST FANS	0.85												
78	TURBINE GENERATOR AUX BEARING LIFT PUMPS 9 - 5HP EACH AND	0.85												
	TURNING GEAR - 60 HP													
79	EMERGENCY INSTRUMENT AIR COMPRESSOR	0.85												
80	RADWASTE SUPPLY FANS	0.85												
81	REACTOR BUILDING SUPPLY AIR HANDLING UNITS	0.85												
82	REACTOR BUILDING EXHAUST FANS	0.85												
83	RADWASTE TANK VENT FILTER FANS	0.85												
84	TURBINE BUILDING BATTERY ROOM SUPPLY FANS	0.85												
85	RADWASTE TANK VENT FILTER HEATING COILS	1												
86	CHEMICAL LAB EXHAUST FANS	0.85												
87	DIESEL GENERATOR STARTING AIR COMPRESSORS	0.85			12.16	7.54	12.16	7.54			12.16	7.54	12.16	7.54
88	REACTOR AUX COOLING SYSTEM PUMPS	0.85												
89	125-V DC BATTERY CHARGERS	0.6												
90	125-V DC BATTERY CHARGERS	0.6			38.00	50.67	38.00	50.67			38.00	50.67	38.00	50.67
91	250-V DC BATTERY CHARGERS	0.6												
92	STANDBY LIQUID CONTROL SOL MIXING	1									40.00		40.00	
93	RFPT AUX LUBE OIL PUMP (NOTE 12) &	0.85												
	TURNING GEAR MOTORS				21.49	13.32	21.49	13.32						
94	RESERVED FOR FUTURE USE	1												
95	208 V/120 V AC XFMRS TO DIST PANELS	0.85			45.00	27.89	45.00	27.89			15.00	9.30	15.00	9.30
96	REACTOR BUILDING FLOOR DRAIN SUMP PUMPS	0.85			8.11	5.03	8.11	5.03			8.11	5.03	8.11	5.03
97	DRYWELL EQUIP DRAIN SUMP PUMPS	0.85												
98	DRYWELL FLOOR DRAIN SUMP PUMPS	0.85												

			Standby Diesel Generator C						Standby Diesel Generator D					
			<10 MIN		10-60 MIN		>60 MIN		<10 MIN		10-60 MIN		>60 MIN	
Item	DESCRIPTION	PF	KW	KVAR	KW	KVAR	KW	KVAR	KW	KVAR	KW	KVAR	KW	KVAR
99	POWER SUPPLY FOR UNIT VENT RADIATION MONITORING SYSTEMS	0.85			3.50	2.17	3.50	2.17						
100	POWER SUPPLY FOR DLD RADIATION MONITORING SYSTEMS	0.85												
101	TURBINE GENERATOR MAIN SEAL OIL PUMP	0.85												
102	TURBINE GENERATOR RECIRC SEAL OIL PUMP	0.85												
103	TURBINE GENERATOR SEAL OIL VACUUM PUMP	0.85												
104	RAWASTE + 24V DC BATTERY ROOM DUCT HEATER	1												
105	CONDENSATE STORAGE TANK HEAT TRACING (SEE NOTE 26)	1			12.00		12.00							
106	TSC SUPPLY SYSTEM FAN	0.85			20.00	12.39	20.00	12.39						
107	TSC SUPPLY SYSTEM HEATING COIL	1			30.00		30.00							
108	TSC EMERGENCY FILTER FAN	0.85			20.00	12.39	20.00	12.39						
109	TSC EMERGENCY FILTER HTG COIL	1			13.00		13.00							
110	STEAM TUNNEL UNIT COOLERS	0.85									16.00	9.92	16.00	9.92
111	TURBINE BUILDING BATTERY ROOM SUPPLY FAN	1												
112	TURBINE BUILDING COMPARTMENT EXHAUST FA	0.85												
113	CONTROL AREA 125 V DC BATTERY ROOM DUCT H	1												
114	REMOTE SHUTDOWN PANEL ROOM SUPPLY FAN	0.85												
115	REMOTE SHUTDOWN PANEL ROOM HEATING COIL	1												
116	PLANT LEAK DETECTION SYSTEM HEAT TRACING	1									12.00		12.00	
117	UNIT VENT RMS HEAT TRACING PANEL	1												
118	POST ACCIDENT SAMPLING SYS HEAT TRACING P	1			15.00		15.00							
119	ELECTRIC UNIT HEATERS	1			24.00		24.00							
120	TSC ELECTRIC PAN HUMIDIFIER (NOTE 26)	0.85			12.97	8.04	12.97	8.04						
121	WING AREA EXHAUST FANS	0.85									16.00	9.92	16.00	9.92
122	WING AREA SUPPLY FANS	0.85									40.00	24.79	40.00	24.79
123	SPDS UPS	1					60.00							
	KW		4426.20	2288.68	3723.32	1917.00	3787.38	1919.51	4426.20	2288.68	2970.95	1599.28	3070.00	1688.55
	KVAR		2288.68		1917.00		1919.51		2288.68		1599.28		1688.55	
	KVA		4982.91		4187.84		4246.03		4982.91		3374.05		3503.73	
	PF		0.89		0.89		0.89		0.89		0.88		0.88	

			Standby Diesel Generator A						Standby Diesel Generator B					
			<10 MIN		10-60 MIN		>60 MIN		<10 MIN		10-60 MIN		>60 MIN	
Item	DESCRIPTION	PF	KW	KVAR	KW	KVAR	KW	KVAR	KW	KVAR	KW	KVAR	KW	KVAR
	CLASS 1E LOADS													
1	REACTOR CORE SPRAY PUMPS (Note 8)	0.91	525.41	239.38	525.41	239.38	525.41	239.38	525.41	239.38				
2	RHR PUMPS (Note 8)	0.89	1002.69	513.69					1002.69	513.69	1002.69	513.69	1002.69	513.69
3	SAFETY AUX. CLG. SYS. PUMPS (Note 8)	0.909	420.62	192.86	420.62	192.86	420.62	192.86	420.62	192.86	420.62	192.86	420.62	192.86
4	CORE SPRAY PMP. RM. CLR. UNIT	0.85	12.16	7.54	12.16	7.54	12.16	7.54	12.16	7.54				
5	MOTOR OPERATED VALVES	0.4	14.81	33.93	14.81	33.93	14.81	33.93	14.81	33.93	14.81	33.93	14.81	33.93
6	SWGR. RM. UNIT CLR. FANS	0.85	20.27	12.56	20.27	12.56	20.27	12.56	20.27	12.56	20.27	12.56	20.27	12.56
7	INTAKE STRUCTURE SUPPLY FANS	0.85	32.43	20.10	32.43	20.10	32.43	20.10	32.43	20.10	32.43	20.10	32.43	20.10
8	INTAKE STRUCTURE TRAVELING SCREENS AREA FANS	0.85	6.08	3.77	6.08	3.77	6.08	3.77	6.08	3.77	6.08	3.77	6.08	3.77
9	RHR PUMP RM UNIT COOLER FANS	0.85	16.22	10.05					16.22	10.05	16.22	10.05	16.22	10.05
10	RCIC PUMP RM. UNIT COOLERS	0.85							8.11	5.03	8.11	5.03	8.11	5.03
11	HPCI PUMP RM UNIT COOLERS	0.85	12.16	7.54	12.16	7.54	12.16	7.54						
12	125-V DC BATTERY CHARGERS	0.6	75.90	101.20	75.90	101.20	75.90	101.20	75.90	101.20	75.90	101.20	75.90	101.20
13	DIESEL AREA BATTERY ROOM EXHAUST FANS	0.85	0.81	0.50	0.81	0.50	0.81	0.50	0.81	0.50	0.81	0.50	0.81	0.50
14	DIESEL FUEL OIL TRANSFER PUMPS	0.85					4.05	2.51					4.05	2.51
15	STATION SERVICE WATER PUMPS (Note 8)	0.875	634.22	350.90	634.22	350.90	634.22	350.90	634.22	350.90	634.22	350.90	634.22	350.90
16	RB FRVS RECIRCULATION SYSTEM FANS	0.85	243.26	150.76	243.26	150.76	243.26	150.76	243.26	150.76	121.63	75.38	121.63	75.38
17	CONTROL RM SUPPLY FANS	0.85												
18	208Y/120-V AC XFMRS TO POWER DIST PANELS	0.85	37.50	23.24	37.50	23.24	37.50	23.24	37.50	23.24	37.50	23.24	37.50	23.24
19	RESERVED FOR FUTURE USE	1												
20	INTAKE STRUCTURE EXHAUST FANS	0.85	32.43	20.10	32.43	20.10	32.43	20.10	32.43	20.10	32.43	20.10	32.43	20.10
21	CONTROL ROOM CHILLED WATER CIRCULATING PUMPS	0.85												
22	CNTRL RM SUPPLY UNIT HTG COILS	1												
23	CONTROL ROOM WATER CHILLERS (Note 10)	0.878												
24	DIESEL GEN RM RECIRC SYSTEMS FANS	0.85	202.72	125.63	202.72	125.63	202.72	125.63	202.72	125.63	202.72	125.63	202.72	125.63
25	PRIMARY CONTAINMENT INSTRUMENT GAS COMPRESSORS	0.85												
26	BATTERY CHARGERS, 250-V DC	0.6	19.00	25.33	19.00	25.33	19.00	25.33	19.00	25.33	19.00	25.33	19.00	25.33
27	CONTROL AREA BATTERY ROOM EXHAUST FANS	0.85												
28	RB FRVS RECIRC UNIT HEATING COILS	1	200.00		200.00		200.00		200.00		100.00		100.00	
29	TRAVELING SCREEN SPRAY WATER BOOSTER PUMPS	0.85	16.22	10.05	16.22	10.05	16.22	10.05	16.22	10.05	16.22	10.05	16.22	10.05
30	RB FRVS VENT UNIT HEATING COILS	1	32.00		32.00		32.00		32.00					
31	CONTROL ROOM SUPPLY SYSTEM RETURN	0.85												
32	CONTROL ROOM EMERGENCY FILTER FANS	0.85												
33	SAFETY AUX COOLING SYSTEM UNIT COOLERS	0.85												

			Standby Diesel Generator A						Standby Diesel Generator B					
			<10 MIN		10-60 MIN		>60 MIN		<10 MIN		10-60 MIN		>60 MIN	
Item	DESCRIPTION	PF	KW	KVAR	KW	KVAR	KW	KVAR	KW	KVAR	KW	KVAR	KW	KVAR
34	FUEL POOL COOLING PUMPS	0.85					60.82	37.69						
35	CONTROL ROOM EMERGENCY FILTER UNIT ELECTRIC HEATING COILS	1												
36	CONTROL EQUIPMENT ROOM AIR SUPPLY FANS	0.85												
37	RB FRVS VENT SYS FANS	0.85	20.27	12.56	20.27	12.56	20.27	12.56	20.27	12.56				
38	CONTAINMENT HYDROGEN RECOMBINER SYSTEM	0.85					140.00	86.76						
39	CONTROL EQIP ROOM SUPPLY UNIT HEATING COILS	1												
40	SERVICE WATER SELF-CLEANING STRAINERS	0.85	0.81	0.50	0.81	0.50	0.81	0.50	0.81	0.50	0.81	0.50	0.81	0.50
41	STANDBY LIQUID CONTROL PUMPS	0.85	32.43	20.10	32.43	20.10	32.43	20.10	32.43	20.10	32.43	20.10	32.43	20.10
42	RESERVED FOR FUTURE USE	1												
43	RESERVED FOR FUTURE USE	1												
44	RESERVED FOR FUTURE USE	1												
45	RESERVED FOR FUTURE USE	1												
46	480 V POWER SUPPLY TO CLASS 1E CHILLER PANELS	0.85	4.00	2.48	4.00	2.48	4.00	2.48	4.00	2.48	4.00	2.48	4.00	2.48
47	TRAVELING SCREENS	0.85	4.05	2.51	4.05	2.51	4.05	2.51	4.05	2.51	4.05	2.51	4.05	2.51
48	ECCS JOCKEY PUMPS	0.85	8.11	5.03	8.11	5.03	8.11	5.03	8.11	5.03	8.11	5.03	8.11	5.03
49	MOTOR DRIVEN DIESEL GENERATOR FUEL OIL STANDBY PUMPS	0.85	1.62	1.01	1.62	1.01	1.62	1.01	1.62	1.01	1.62	1.01	1.62	1.01
50	STANDBY LIQUID CONTROL PUMP ROOM DUCT HEATERS	1			45.00		45.00							
51	480 V POWER SUPPLY TO HYDROGEN AND OXYGEN ANALYZER PANELS	0.85	1.00	0.62	1.00	0.62	1.00	0.62	1.00	0.62	1.00	0.62	1.00	0.62
52	250 V DC BATTERY ROOM DUCT HEATERS	1	10.00		10.00		10.00							
53	125 V DC DIESEL AREA BATTERY ROOM DUCT HEATERS	1	21.00		21.00		21.00		21.00		21.00		21.00	
54	HPCI PUMP ROOM DUCT HEATER	1	11.00		11.00		11.00							
55	RCIC PUMP ROOM DUCT HEATER	1							7.00		7.00		7.00	
56	250 V DC BATTERY ROOM DUCT HEATER	1							8.00		8.00		8.00	
57	CLASS 1E PANEL ROOM WATER CHILLERS	0.886	198.00	103.62	198.00	103.62	198.00	103.62	198.00	103.62				
58	CLASS 1E PANEL ROOM CHILLED WATER	0.85	32.43	20.10	32.43	20.10	32.43	20.10	32.43	20.10				
59	CLASS 1E PANEL ROOM SUPPLY & RETURN AIR FANS	0.85	60.82	37.69	60.82	37.69	60.82	37.69	60.82	37.69				
60	CLASS 1E PANEL ROOM ELECTRIC HEATERS	1	100.00		100.00		100.00		100.00					
61	BATTERY ROOM EXHAUST FANS	0.85	0.81	0.50	0.81	0.50	0.81	0.50	0.81	0.50	0.81	0.50	0.81	0.50
62	BATTERY ROOM DUCT HEATERS	1												
63	H2/O2 ANALYZER HEAT TRACING PANELS	1												

			Standby Diesel Generator A						Standby Diesel Generator B					
			<10 MIN		10-60 MIN		>60 MIN		<10 MIN		10-60 MIN		>60 MIN	
Item	DESCRIPTION	PF	KW	KVAR	KW	KVAR	KW	KVAR	KW	KVAR	KW	KVAR	KW	KVAR
64	RESERVED FOR FUTURE USE	1												
65	RESERVED FOR FUTURE USE	1												
66	RESERVED FOR FUTURE USE	1												
67	RESERVED FOR FUTURE USE	1												
68	RESERVED FOR FUTURE USE	1												
69	RESERVED FOR FUTURE USE	1												
70	RESERVED FOR FUTURE USE	1												

			Standby Diesel Generator A						Standby Diesel Generator B					
			<10 MIN		10-60 MIN		>60 MIN		<10 MIN		10-60 MIN		>60 MIN	
Item	DESCRIPTION	PF	KW	KVAR	KW	KVAR	KW	KVAR	KW	KVAR	KW	KVAR	KW	KVAR
	NON-CLASS 1E LOADS													
	See Note 11													
71	TURBINE GENERATOR TURNING GEAR OIL	0.85									32.00	19.83	32.00	19.83
72	STANDBY LIQUID CONTROL SOLUTION OPERATING HEATER	1			10.00		10.00							
73	DRYWELL COOLING UNIT FANS	0.85												
74	RADWASTE EXHAUST FANS	0.85												
75	ESSENTIAL PLANT LIGHTING	0.9			145.90	70.66	145.90	70.66			37.40	18.11	37.40	18.11
76	CRD WATER PUMPS	0.85												
77	TURBINE BUILDING BATTERY ROOM EXHAUST FANS	0.85			2.43	1.51	2.43	1.51			2.43	1.51	2.43	1.51
78	TURBINE GENERATOR AUX BEARING LIFT PUMPS 9 - 5HP EACH AND	0.85												
	TURNING GEAR - 60 HP										85.14	52.77	85.14	52.77
79	EMERGENCY INSTRUMENT AIR COMPRESSOR	0.85												
80	RADWASTE SUPPLY FANS	0.85												
81	REACTOR BUILDING SUPPLY AIR HANDLING UNITS	0.85												
82	REACTOR BUILDING EXHAUST FANS	0.85												
83	RADWASTE TANK VENT FILTER FANS	0.85			6.08	3.77	6.08	3.77			6.08	3.77	6.08	3.77
84	TURBINE BUILDING BATTERY ROOM SUPPLY FANS	0.85			4.05	2.51	4.05	2.51			4.05	2.51	4.05	2.51
85	RADWASTE TANK VENT FILTER HEATING	1			3.60		3.60				3.60		3.60	
86	CHEMICAL LAB EXHAUST FANS	0.85			16.22	10.05	16.22	10.05			16.22	10.05	16.22	10.05
87	DIESEL GENERATOR STARTING AIR COMPRESSORS	0.85			12.16	7.54	12.16	7.54			12.16	7.54	12.16	7.54
88	REACTOR AUX COOLING SYSTEM PUMPS	0.85												
89	125-V DC BATTERY CHARGERS	0.6			114.00	152.00	114.00	152.00			114.00	152.00	114.00	152.00
90	125-V DC BATTERY CHARGERS	0.6			38.00	50.67	38.00	50.67			38.00	50.67	38.00	50.67
91	250-V DC BATTERY CHARGERS	0.6									57.00	76.00	57.00	76.00
92	STANDBY LIQUID CONTROL SOL MIXING HEATER	1												
93	RFPT AUX LUBE OIL PUMP (NOTE 12) &	0.85												
	TURNING GEAR MOTORS				21.49	13.32	21.49	13.32			21.49	13.32	21.49	13.32
94	RESERVED FOR FUTURE USE	1												
95	208 V/120 V AC XFMRS TO DIST PANELS	0.85			30.00	18.59	30.00	18.59			15.00	9.30	15.00	9.30
96	REACTOR BUILDING FLOOR DRAIN SUMP	0.85												
97	DRYWELL EQUIP DRAIN SUMP PUMPS	0.85			4.05	2.51	4.05	2.51			4.05	2.51	4.05	2.51
98	DRYWELL FLOOR DRAIN SUMP PUMPS	0.85			4.05	2.51	4.05	2.51			4.05	2.51	4.05	2.51

			Standby Diesel Generator A						Standby Diesel Generator B					
			<10 MIN		10-60 MIN		>60 MIN		<10 MIN		10-60 MIN		>60 MIN	
Item	DESCRIPTION	PF	KW	KVAR	KW	KVAR	KW	KVAR	KW	KVAR	KW	KVAR	KW	KVAR
99	POWER SUPPLY FOR UNIT VENT RADIATION MONITORING SYSTEMS	0.85			3.50	2.17	3.50	2.17			3.50	2.17	3.50	2.17
100	POWER SUPPLY FOR DLD RADIATION MONITORING SYSTEMS	0.85												
101	TURBINE GENERATOR MAIN SEAL OIL PUMP	0.85									16.22	10.05	16.22	10.05
102	TURBINE GENERATOR RECIRC SEAL OIL PUMP	0.85									6.08	3.77	6.08	3.77
103	TURBINE GENERATOR SEAL OIL VACUUM	0.85									2.43	1.51	2.43	1.51
104	RAWASTE + 24V DC BATTERY ROOM DUCT HEATER	1												
105	CONDENSATE STORAGE TANK HEAT TRACING (SEE NOTE 26)	1			5.00		5.00							
106	TSC SUPPLY SYSTEM FAN	0.85												
107	TSC SUPPLY SYSTEM HEATING COIL	1												
108	TSC EMERGENCY FILTER FAN	0.85												
109	TSC EMERGENCY FILTER HTG COIL	1												
110	STEAM TUNNEL UNIT COOLERS	0.85									16.00	9.92	16.00	9.92
111	TURBINE BUILDING BATTERY ROOM SUPPLY FAN & HTG COIL	1			50.00		50.00							
112	TURBINE BUILDING COMPARTMENT EXHAUST FANS	0.85												
113	CONTROL AREA 125 V DC BATTERY ROOM DUCT HEATER	1			16.00		16.00							
114	REMOTE SHUTDOWN PANEL ROOM SUPPLY	0.85			4.00	2.48	4.00	2.48						
115	REMOTE SHUTDOWN PANEL ROOM HEATING COIL	1			10.00		10.00							
116	PLANT LEAK DETECTION SYSTEM HEAT TRACING PANEL (SEE NOTE 26)	1												
117	UNIT VENT RMS HEAT TRACING PANEL	1			15.00		15.00							
118	POST ACCIDENT SAMPLING SYS HEAT TRACING PANEL	1												
119	ELECTRIC UNIT HEATERS	1												
120	TSC ELECTRIC PAN HUMIDIFIER (NOTE 26)	0.85												
121	WING AREA EXHAUST FANS	0.85			16.00	9.92	16.00	9.92						
122	WING AREA SUPPLY FANS	0.85			40.00	24.79	40.00	24.79						
123	SPDS UPS	1					60.00							

			Standby Diesel Generator A						Standby Diesel Generator B					
			<10 MIN		10-60 MIN		>60 MIN		<10 MIN		10-60 MIN		>60 MIN	
Item	DESCRIPTION	PF	KW	KVAR	KW	KVAR	KW	KVAR	KW	KVAR	KW	KVAR	KW	KVAR
	KW		4063.28	2055.87	3660.92	1907.12	3925.78	2034.09	4053.22	2053.36	3347.42	2006.89	3351.47	2009.40
	KVAR		2055.87		1907.12		2034.09		2053.36		2006.89		2009.40	
	KVA		4553.77		4127.88		4421.46		4543.66		3902.92		3907.69	
	PF		0.89		0.89		0.89		0.89		0.86		0.86	

			Standby Diesel Generator C						Standby Diesel Generator D					
			<10 MIN		10-60 MIN		>60 MIN		<10 MIN		10-60 MIN		>60 MIN	
Item	DESCRIPTION	PF	KW	KVAR	KW	KVAR	KW	KVAR	KW	KVAR	KW	KVAR	KW	KVAR
	CLASS 1E LOADS													
1	REACTOR CORE SPRAY PUMPS (Note 8)	0.91							525.41	239.38	525.41	239.38	525.41	239.38
2	RHR PUMPS (Note 8)	0.89							1002.69	513.69				
3	SAFETY AUX. CLG. SYS. PUMPS (Note 8)	0.909							420.62	192.86	420.62	192.86	420.62	192.86
4	CORE SPRAY PMP. RM. CLR. UNIT	0.85							12.16	7.54	12.16	7.54	12.16	7.54
5	MOTOR OPERATED VALVES	0.4							14.81	33.93	14.81	33.93	14.81	33.93
6	SWGR. RM. UNIT CLR. FANS	0.85							20.27	12.56	20.27	12.56	20.27	12.56
7	INTAKE STRUCTURE SUPPLY FANS	0.85							32.43	20.10				
8	INTAKE STRUCTURE TRAVELING SCREENS AREA FANS	0.85												
9	RHR PUMP RM UNIT COOLER FANS	0.85							16.22	10.05				
10	RCIC PUMP RM. UNIT COOLERS	0.85												
11	HPCI PUMP RM UNIT COOLERS	0.85												
12	125-V DC BATTERY CHARGERS	0.6							113.85	151.80	113.85	151.80	113.85	151.80
13	DIESEL AREA BATTERY ROOM EXHAUST FANS	0.85							0.81	0.50	0.81	0.50	0.81	0.50
14	DIESEL FUEL OIL TRANSFER PUMPS	0.85											4.05	2.51
15	STATION SERVICE WATER PUMPS (Note 8)	0.875							634.22	350.90	634.22	350.90	634.22	350.90
16	RB FRVS RECIRCULATION SYSTEM FANS	0.85							121.63	75.38	121.63	75.38	121.63	75.38
17	CONTROL RM SUPPLY FANS	0.85							32.43	20.10	32.43	20.10	32.43	20.10
18	208Y/120-V AC XFMRS TO POWER DIST PANELS	0.85							37.50	23.24	37.50	23.24	37.50	23.24
19	RESERVED FOR FUTURE USE	1												
20	INTAKE STRUCTURE EXHAUST FANS	0.85							32.43	20.10				
21	CONTROL ROOM CHILLED WATER CIRCULATING PUMPS	0.85							48.65	30.15	48.65	30.15	48.65	30.15
22	CNTRL RM SUPPLY UNIT HTG COILS	1							90.00		90.00		90.00	
23	CONTROL ROOM WATER CHILLERS (Note 10)	0.878							506.00	275.86	506.00	275.86	506.00	275.86
24	DIESEL GEN RM RECIRC SYSTEMS FANS	0.85							202.72	125.63	202.72	125.63	202.72	125.63
25	PRIMARY CONTAINMENT INSTRUMENT GAS COMPRESSORS	0.85									12.16	7.54	12.16	7.54
26	BATTERY CHARGERS, 250-V DC	0.6												
27	CONTROL AREA BATTERY ROOM EXHAUST FANS	0.85							4.05	2.51	4.05	2.51	4.05	2.51
28	RB FRVS RECIRC UNIT HEATING COILS	1							100.00		100.00		100.00	
29	TRAVELING SCREEN SPRAY WATER BOOSTER PUMPS	0.85							16.22	10.05	16.22	10.05	16.22	10.05
30	RB FRVS VENT UNIT HEATING COILS	1												
31	CONTROL ROOM SUPPLY SYSTEM RETURN	0.85							24.33	15.08	24.33	15.08	24.33	15.08
32	CONTROL ROOM EMERGENCY FILTER FANS	0.85							20.27	12.56	20.27	12.56	20.27	12.56
33	SAFETY AUX COOLING SYSTEM UNIT COOLERS	0.85							12.16	7.54	12.16	7.54	12.16	7.54

			Standby Diesel Generator C						Standby Diesel Generator D					
			<10 MIN		10-60 MIN		>60 MIN		<10 MIN		10-60 MIN		>60 MIN	
Item	DESCRIPTION	PF	KW	KVAR	KW	KVAR	KW	KVAR	KW	KVAR	KW	KVAR	KW	KVAR
34	FUEL POOL COOLING PUMPS	0.85												
35	CONTROL ROOM EMERGENCY FILTER UNIT ELECTRIC HEATING COILS	1							13.00		13.00		13.00	
36	CONTROL EQUIPMENT ROOM AIR SUPPLY FANS	0.85							202.72	125.63	202.72	125.63	202.72	125.63
37	RB FRVS VENT SYS FANS	0.85												
38	CONTAINMENT HYDROGEN RECOMBINER SYSTEM	0.85												
39	CONTROL EQIP ROOM SUPPLY UNIT HEATING COILS	1							100.00		100.00		100.00	
40	SERVICE WATER SELF-CLEANING STRAINERS	0.85							0.81	0.50	0.81	0.50	0.81	0.50
41	STANDBY LIQUID CONTROL PUMPS	0.85												
42	RESERVED FOR FUTURE USE	1												
43	RESERVED FOR FUTURE USE	1												
44	RESERVED FOR FUTURE USE	1												
45	RESERVED FOR FUTURE USE	1												
46	480 V POWER SUPPLY TO CLASS 1E CHILLER PANELS	0.85							4.00	2.48	4.00	2.48	4.00	2.48
47	TRAVELING SCREENS	0.85							4.05	2.51	4.05	2.51	4.05	2.51
48	ECCS JOCKEY PUMPS	0.85							8.11	5.03	8.11	5.03	8.11	5.03
49	MOTOR DRIVEN DIESEL GENERATOR FUEL OIL STANDBY PUMPS	0.85							1.62	1.01	1.62	1.01	1.62	1.01
50	STANDBY LIQUID CONTROL PUMP ROOM DUCT HEATERS	1									45.00			
51	480 V POWER SUPPLY TO HYDROGEN AND OXYGEN ANALYZER PANELS	0.85												
52	250 V DC BATTERY ROOM DUCT HEATERS	1												
53	125 V DC DIESEL AREA BATTERY ROOM DUCT HEATERS	1							21.00		21.00		21.00	
54	HPCI PUMP ROOM DUCT HEATER	1												
55	RCIC PUMP ROOM DUCT HEATER	1												
56	250 V DC BATTERY ROOM DUCT HEATER	1												
57	CLASS 1E PANEL ROOM WATER CHILLERS	0.886												
58	CLASS 1E PANEL ROOM CHILLED WATER	0.85												
59	CLASS 1E PANEL ROOM SUPPLY & RETURN AIR FANS	0.85												
60	CLASS 1E PANEL ROOM ELECTRIC HEATERS	1												
61	BATTERY ROOM EXHAUST FANS	0.85												
62	BATTERY ROOM DUCT HEATERS	1							14.00		14.00		14.00	
63	H2/O2 ANALYZER HEAT TRACING PANELS	1							15.00		15.00		15.00	

			Standby Diesel Generator C						Standby Diesel Generator D					
			<10 MIN		10-60 MIN		>60 MIN		<10 MIN		10-60 MIN		>60 MIN	
Item	DESCRIPTION	PF	KW	KVAR	KW	KVAR	KW	KVAR	KW	KVAR	KW	KVAR	KW	KVAR
64	RESERVED FOR FUTURE USE	1												
65	RESERVED FOR FUTURE USE	1												
66	RESERVED FOR FUTURE USE	1												
67	RESERVED FOR FUTURE USE	1												
68	RESERVED FOR FUTURE USE	1												
69	RESERVED FOR FUTURE USE	1												
70	RESERVED FOR FUTURE USE	1												

			Standby Diesel Generator C						Standby Diesel Generator D					
			<10 MIN		10-60 MIN		>60 MIN		<10 MIN		10-60 MIN		>60 MIN	
Item	DESCRIPTION	PF	KW	KVAR	KW	KVAR	KW	KVAR	KW	KVAR	KW	KVAR	KW	KVAR
	NON-CLASS 1E LOADS													
	See Note 11													
71	TURBINE GENERATOR TURNING GEAR OIL	0.85												
72	STANDBY LIQUID CONTROL SOLUTION OPERATING HEATER	1												
73	DRYWELL COOLING UNIT FANS	0.85												
74	RADWASTE EXHAUST FANS	0.85												
75	ESSENTIAL PLANT LIGHTING	0.9									93.50	45.28	93.50	45.28
76	CRD WATER PUMPS	0.85									202.72	125.63	202.72	125.63
77	TURBINE BUILDING BATTERY ROOM EXHAUST FANS	0.85												
78	TURBINE GENERATOR AUX BEARING LIFT PUMPS 9 - 5HP EACH AND	0.85												
	TURNING GEAR - 60 HP													
79	EMERGENCY INSTRUMENT AIR COMPRESSOR	0.85												
80	RADWASTE SUPPLY FANS	0.85												
81	REACTOR BUILDING SUPPLY AIR HANDLING UNITS	0.85												
82	REACTOR BUILDING EXHAUST FANS	0.85												
83	RADWASTE TANK VENT FILTER FANS	0.85												
84	TURBINE BUILDING BATTERY ROOM SUPPLY FANS	0.85												
85	RADWASTE TANK VENT FILTER HEATING	1												
86	CHEMICAL LAB EXHAUST FANS	0.85												
87	DIESEL GENERATOR STARTING AIR COMPRESSORS	0.85									12.16	7.54	12.16	7.54
88	REACTOR AUX COOLING SYSTEM PUMPS	0.85												
89	125-V DC BATTERY CHARGERS	0.6												
90	125-V DC BATTERY CHARGERS	0.6									38.00	50.67	38.00	50.67
91	250-V DC BATTERY CHARGERS	0.6												
92	STANDBY LIQUID CONTROL SOL MIXING HEATER	1									40.00		40.00	
93	RFPT AUX LUBE OIL PUMP (NOTE 12) &	0.85												
	TURNING GEAR MOTORS													
94	RESERVED FOR FUTURE USE	1												
95	208 V/120 V AC XFMRS TO DIST PANELS	0.85									15.00	9.30	15.00	9.30
96	REACTOR BUILDING FLOOR DRAIN SUMP	0.85									8.11	5.03	8.11	5.03
97	DRYWELL EQUIP DRAIN SUMP PUMPS	0.85												
98	DRYWELL FLOOR DRAIN SUMP PUMPS	0.85												

			Standby Diesel Generator C						Standby Diesel Generator D					
			<10 MIN		10-60 MIN		>60 MIN		<10 MIN		10-60 MIN		>60 MIN	
Item	DESCRIPTION	PF	KW	KVAR	KW	KVAR	KW	KVAR	KW	KVAR	KW	KVAR	KW	KVAR
99	POWER SUPPLY FOR UNIT VENT RADIATION MONITORING SYSTEMS	0.85												
100	POWER SUPPLY FOR DLD RADIATION MONITORING SYSTEMS	0.85												
101	TURBINE GENERATOR MAIN SEAL OIL PUMP	0.85												
102	TURBINE GENERATOR RECIRC SEAL OIL PUMP	0.85												
103	TURBINE GENERATOR SEAL OIL VACUUM	0.85												
104	RAWASTE + 24V DC BATTERY ROOM DUCT HEATER	1												
105	CONDENSATE STORAGE TANK HEAT TRACING (SEE NOTE 26)	1												
106	TSC SUPPLY SYSTEM FAN	0.85												
107	TSC SUPPLY SYSTEM HEATING COIL	1												
108	TSC EMERGENCY FILTER FAN	0.85												
109	TSC EMERGENCY FILTER HTG COIL	1												
110	STEAM TUNNEL UNIT COOLERS	0.85									16.00	9.92	16.00	9.92
111	TURBINE BUILDING BATTERY ROOM SUPPLY FAN & HTG COIL	1												
112	TURBINE BUILDING COMPARTMENT EXHAUST FANS	0.85												
113	CONTROL AREA 125 V DC BATTERY ROOM DUCT HEATER	1												
114	REMOTE SHUTDOWN PANEL ROOM SUPPLY	0.85												
115	REMOTE SHUTDOWN PANEL ROOM HEATING COIL	1												
116	PLANT LEAK DETECTION SYSTEM HEAT TRACING PANEL (SEE NOTE 26)	1									12.00		12.00	
117	UNIT VENT RMS HEAT TRACING PANEL	1												
118	POST ACCIDENT SAMPLING SYS HEAT TRACING PANEL	1												
119	ELECTRIC UNIT HEATERS	1												
120	TSC ELECTRIC PAN HUMIDIFIER (NOTE 26)	0.85												
121	WING AREA EXHAUST FANS	0.85									16.00	9.92	16.00	9.92
122	WING AREA SUPPLY FANS	0.85									40.00	24.79	40.00	24.79
123	SPDS UPS	1												

			Standby Diesel Generator C						Standby Diesel Generator D					
			<10 MIN		10-60 MIN		>60 MIN		<10 MIN		10-60 MIN		>60 MIN	
Item	DESCRIPTION	PF	KW	KVAR	KW	KVAR	KW	KVAR	KW	KVAR	KW	KVAR	KW	KVAR
	KW								4426.20	2288.68	3893.08	2020.34	3852.13	2022.85
	KVAR								2288.68		2020.34		2022.85	
	KVA								4982.91		4386.10		4350.96	
	PF								0.89		0.89		0.89	

			Standby Diesel Generator A						Standby Diesel Generator B					
			<10 MIN		10-60 MIN		>60 MIN		<10 MIN		10-60 MIN		>60 MIN	
Item	DESCRIPTION	PF	KW	KVAR	KW	KVAR	KW	KVAR	KW	KVAR	KW	KVAR	KW	KVAR
	CLASS 1E LOADS													
1	REACTOR CORE SPRAY PUMPS (Note 8)	0.91	525.41	239.38					525.41	239.38	525.41	239.38	525.41	239.38
2	RHR PUMPS (Note 8)	0.89	1002.69	513.69	1002.69	513.69	1002.69	513.69	1002.69	513.69				
3	SAFETY AUX. CLG. SYS. PUMPS (Note 8)	0.909	420.62	192.86	420.62	192.86	420.62	192.86	420.62	192.86	420.62	192.86	420.62	192.86
4	CORE SPRAY PMP. RM. CLR. UNIT	0.85	12.16	7.54					12.16	7.54	12.16	7.54	12.16	7.54
5	MOTOR OPERATED VALVES	0.4	14.81	33.93	14.81	33.93	14.81	33.93	14.81	33.93	14.81	33.93	14.81	33.93
6	SWGR. RM. UNIT CLR. FANS	0.85	20.27	12.56	20.27	12.56	20.27	12.56	20.27	12.56	20.27	12.56	20.27	12.56
7	INTAKE STRUCTURE SUPPLY FANS	0.85	32.43	20.10	32.43	20.10	32.43	20.10	32.43	20.10	32.43	20.10	32.43	20.10
8	INTAKE STRUCTURE TRAVELING SCREENS AREA FANS	0.85	6.08	3.77	6.08	3.77	6.08	3.77	6.08	3.77	6.08	3.77	6.08	3.77
9	RHR PUMP RM UNIT COOLER FANS	0.85	16.22	10.05	16.22	10.05	16.22	10.05	16.22	10.05				
10	RCIC PUMP RM. UNIT COOLERS	0.85							8.11	5.03	8.11	5.03	8.11	5.03
11	HPCI PUMP RM UNIT COOLERS	0.85	12.16	7.54	12.16	7.54	12.16	7.54						
12	125-V DC BATTERY CHARGERS	0.6	75.90	101.20	75.90	101.20	75.90	101.20	75.90	101.20	75.90	101.20	75.90	101.20
13	DIESEL AREA BATTERY ROOM EXHAUST FANS	0.85	0.81	0.50	0.81	0.50	0.81	0.50	0.81	0.50	0.81	0.50	0.81	0.50
14	DIESEL FUEL OIL TRANSFER PUMPS	0.85					4.05	2.51					4.05	2.51
15	STATION SERVICE WATER PUMPS (Note 8)	0.875	634.22	350.90	634.22	350.90	634.22	350.90	634.22	350.90	634.22	350.90	634.22	350.90
16	RB FRVS RECIRCULATION SYSTEM FANS	0.85	243.26	150.76	121.63	75.38	121.63	75.38	243.26	150.76	243.26	150.76	243.26	150.76
17	CONTROL RM SUPPLY FANS	0.85												
18	208Y/120-V AC XFMRS TO POWER DIST PANELS	0.85	37.50	23.24	37.50	23.24	37.50	23.24	37.50	23.24	37.50	23.24	37.50	23.24
19	RESERVED FOR FUTURE USE	1												
20	INTAKE STRUCTURE EXHAUST FANS	0.85	32.43	20.10	32.43	20.10	32.43	20.10	32.43	20.10	32.43	20.10	32.43	20.10
21	CONTROL ROOM CHILLED WATER CIRCULATING PUMPS	0.85												
22	CNTRL RM SUPPLY UNIT HTG COILS	1												
23	CONTROL ROOM WATER CHILLERS (Note 10)	0.878												
24	DIESEL GEN RM RECIRC SYSTEMS FANS	0.85	202.72	125.63	202.72	125.63	202.72	125.63	202.72	125.63	202.72	125.63	202.72	125.63
25	PRIMARY CONTAINMENT INSTRUMENT GAS COMPRESSORS	0.85												
26	BATTERY CHARGERS, 250-V DC	0.6	19.00	25.33	19.00	25.33	19.00	25.33	19.00	25.33	19.00	25.33	19.00	25.33
27	CONTROL AREA BATTERY ROOM EXHAUST FANS	0.85												
28	RB FRVS RECIRC UNIT HEATING COILS	1	200.00		100.00		100.00		200.00		200.00		200.00	
29	TRAVELING SCREEN SPRAY WATER BOOSTER PUMPS	0.85	16.22	10.05	16.22	10.05	16.22	10.05	16.22	10.05	16.22	10.05	16.22	10.05
30	RB FRVS VENT UNIT HEATING COILS	1	32.00		32.00		32.00		32.00					
31	CONTROL ROOM SUPPLY SYSTEM RETURN FANS	0.85												
32	CONTROL ROOM EMERGENCY FILTER FANS	0.85												
33	SAFETY AUX COOLING SYSTEM UNIT COOLERS	0.85												
34	FUEL POOL COOLING PUMPS	0.85					60.82	37.69						

			Standby Diesel Generator A						Standby Diesel Generator B					
			<10 MIN		10-60 MIN		>60 MIN		<10 MIN		10-60 MIN		>60 MIN	
Item	DESCRIPTION	PF	KW	KVAR	KW	KVAR	KW	KVAR	KW	KVAR	KW	KVAR	KW	KVAR
35	CONTROL ROOM EMERGENCY FILTER UNIT ELECTRIC HEATING COILS	1												
36	CONTROL EQUIPMENT ROOM AIR SUPPLY FANS	0.85												
37	RB FRVS VENT SYS FANS	0.85	20.27	12.56	20.27	12.56	20.27	12.56	20.27	12.56				
38	CONTAINMENT HYDROGEN RECOMBINER	0.85					140.00	86.76						
39	CONTROL EQIP ROOM SUPPLY UNIT HEATING COILS	1												
40	SERVICE WATER SELF-CLEANING STRAINERS	0.85	0.81	0.50	0.81	0.50	0.81	0.50	0.81	0.50	0.81	0.50	0.81	0.50
41	STANDBY LIQUID CONTROL PUMPS	0.85	32.43	20.10	32.43	20.10	32.43	20.10	32.43	20.10	32.43	20.10	32.43	20.10
42	RESERVED FOR FUTURE USE	1												
43	RESERVED FOR FUTURE USE	1												
44	RESERVED FOR FUTURE USE	1												
45	RESERVED FOR FUTURE USE	1												
46	480 V POWER SUPPLY TO CLASS 1E CHILLER PANELS	0.85	4.00	2.48	4.00	2.48	4.00	2.48	4.00	2.48	4.00	2.48	4.00	2.48
47	TRAVELING SCREENS	0.85	4.05	2.51	4.05	2.51	4.05	2.51	4.05	2.51	4.05	2.51	4.05	2.51
48	ECCS JOCKEY PUMPS	0.85	8.11	5.03	8.11	5.03	8.11	5.03	8.11	5.03	8.11	5.03	8.11	5.03
49	MOTOR DRIVEN DIESEL GENERATOR FUEL OIL STANDBY PUMPS	0.85	1.62	1.01	1.62	1.01	1.62	1.01	1.62	1.01	1.62	1.01	1.62	1.01
50	STANDBY LIQUID CONTROL PUMP ROOM DUCT HEATERS	1			45.00		45.00							
51	480 V POWER SUPPLY TO HYDROGEN AND OXYGEN ANALYZER PANELS	0.85	1.00	0.62	1.00	0.62	1.00	0.62	1.00	0.62	1.00	0.62	1.00	0.62
52	250 V DC BATTERY ROOM DUCT HEATERS	1	10.00		10.00		10.00							
53	125 V DC DIESEL AREA BATTERY ROOM DUCT HEATERS	1	21.00		21.00		21.00		21.00		21.00		21.00	
54	HPCI PUMP ROOM DUCT HEATER	1	11.00		11.00		11.00							
55	RCIC PUMP ROOM DUCT HEATER	1							7.00		7.00		7.00	
56	250 V DC BATTERY ROOM DUCT HEATER	1							8.00		8.00		8.00	
57	CLASS 1E PANEL ROOM WATER CHILLERS	0.886	198.00	103.62	198.00	103.62	198.00	103.62	198.00	103.62				
58	CLASS 1E PANEL ROOM CHILLED WATER PUMPS	0.85	32.43	20.10	32.43	20.10	32.43	20.10	32.43	20.10				
59	CLASS 1E PANEL ROOM SUPPLY & RETURN AIR FANS	0.85	60.82	37.69	60.82	37.69	60.82	37.69	60.82	37.69				
60	CLASS 1E PANEL ROOM ELECTRIC HEATERS	1	100.00		100.00		100.00		100.00					
61	BATTERY ROOM EXHAUST FANS	0.85	0.81	0.50	0.81	0.50	0.81	0.50	0.81	0.50	0.81	0.50	0.81	0.50
62	BATTERY ROOM DUCT HEATERS	1												
63	H2/O2 ANALYZER HEAT TRACING PANELS	1												
64	RESERVED FOR FUTURE USE	1												
65	RESERVED FOR FUTURE USE	1												

USER RESPONSIBLE FOR VERIFYING REVISION, STATUS AND CHANGES

			Standby Diesel Generator A						Standby Diesel Generator B					
			<10 MIN		10-60 MIN		>60 MIN		<10 MIN		10-60 MIN		>60 MIN	
Item	DESCRIPTION	PF	KW	KVAR	KW	KVAR	KW	KVAR	KW	KVAR	KW	KVAR	KW	KVAR
66	RESERVED FOR FUTURE USE	1												
67	RESERVED FOR FUTURE USE	1												
68	RESERVED FOR FUTURE USE	1												
69	RESERVED FOR FUTURE USE	1												
70	RESERVED FOR FUTURE USE	1												

			Standby Diesel Generator A						Standby Diesel Generator B					
			<10 MIN		10-60 MIN		>60 MIN		<10 MIN		10-60 MIN		>60 MIN	
Item	DESCRIPTION	PF	KW	KVAR	KW	KVAR	KW	KVAR	KW	KVAR	KW	KVAR	KW	KVAR
	NON-CLASS 1E LOADS													
	See Note 11													
71	TURBINE GENERATOR TURNING GEAR OIL PUMP	0.85									32.00	19.83	32.00	19.83
72	STANDBY LIQUID CONTROL SOLUTION OPERATING HEATER	1			10.00		10.00							
73	DRYWELL COOLING UNIT FANS	0.85												
74	RADWASTE EXHAUST FANS	0.85												
75	ESSENTIAL PLANT LIGHTING	0.9			52.40	25.38	52.40	25.38			130.90	63.40	130.90	63.40
76	CRD WATER PUMPS	0.85												
77	TURBINE BUILDING BATTERY ROOM EXHAUST FANS	0.85			2.43	1.51	2.43	1.51			2.43	1.51	2.43	1.51
78	TURBINE GENERATOR AUX BEARING LIFT PUMPS 9 - 5HP EACH AND	0.85												
	TURNING GEAR - 60 HP										85.14	52.77	85.14	52.77
79	EMERGENCY INSTRUMENT AIR COMPRESSOR	0.85												
80	RADWASTE SUPPLY FANS	0.85												
81	REACTOR BUILDING SUPPLY AIR HANDLING UNITS	0.85												
82	REACTOR BUILDING EXHAUST FANS	0.85												
83	RADWASTE TANK VENT FILTER FANS	0.85			6.08	3.77	6.08	3.77			6.08	3.77	6.08	3.77
84	TURBINE BUILDING BATTERY ROOM SUPPLY	0.85			4.05	2.51	4.05	2.51			4.05	2.51	4.05	2.51
85	RADWASTE TANK VENT FILTER HEATING COILS	1			3.60		3.60				3.60		3.60	
86	CHEMICAL LAB EXHAUST FANS	0.85			16.22	10.05	16.22	10.05			16.22	10.05	16.22	10.05
87	DIESEL GENERATOR STARTING AIR COMPRESSORS	0.85			12.16	7.54	12.16	7.54			12.16	7.54	12.16	7.54
88	REACTOR AUX COOLING SYSTEM PUMPS	0.85												
89	125-V DC BATTERY CHARGERS	0.6			114.00	152.00	114.00	152.00			114.00	152.00	114.00	152.00
90	125-V DC BATTERY CHARGERS	0.6			38.00	50.67	38.00	50.67			38.00	50.67	38.00	50.67
91	250-V DC BATTERY CHARGERS	0.6									57.00	76.00	57.00	76.00
92	STANDBY LIQUID CONTROL SOL MIXING	1												
93	RFPT AUX LUBE OIL PUMP (NOTE 12) &	0.85												
	TURNING GEAR MOTORS				21.49	13.32	21.49	13.32			21.49	13.32	21.49	13.32
94	RESERVED FOR FUTURE USE	1												
95	208 V/120 V AC XFMRS TO DIST PANELS	0.85			30.00	18.59	30.00	18.59			15.00	9.30	15.00	9.30
96	REACTOR BUILDING FLOOR DRAIN SUMP PUMPS	0.85												
97	DRYWELL EQUIP DRAIN SUMP PUMPS	0.85			4.05	2.51	4.05	2.51			4.05	2.51	4.05	2.51
98	DRYWELL FLOOR DRAIN SUMP PUMPS	0.85			4.05	2.51	4.05	2.51			4.05	2.51	4.05	2.51
99	POWER SUPPLY FOR UNIT VENT RADIATION MONITORING SYSTEMS	0.85			3.50	2.17	3.50	2.17			3.50	2.17	3.50	2.17

			Standby Diesel Generator A						Standby Diesel Generator B					
			<10 MIN		10-60 MIN		>60 MIN		<10 MIN		10-60 MIN		>60 MIN	
Item	DESCRIPTION	PF	KW	KVAR	KW	KVAR	KW	KVAR	KW	KVAR	KW	KVAR	KW	KVAR
100	POWER SUPPLY FOR DLD RADIATION MONITORING SYSTEMS	0.85												
101	TURBINE GENERATOR MAIN SEAL OIL PUMP	0.85									16.22	10.05	16.22	10.05
102	TURBINE GENERATOR RECIRC SEAL OIL PUMP	0.85									6.08	3.77	6.08	3.77
103	TURBINE GENERATOR SEAL OIL VACUUM PUMP	0.85									2.43	1.51	2.43	1.51
104	RAWASTE + 24V DC BATTERY ROOM DUCT HEATER	1												
105	CONDENSATE STORAGE TANK HEAT TRACING (SEE NOTE 26)	1			5.00		5.00							
106	TSC SUPPLY SYSTEM FAN	0.85												
107	TSC SUPPLY SYSTEM HEATING COIL	1												
108	TSC EMERGENCY FILTER FAN	0.85												
109	TSC EMERGENCY FILTER HTG COIL	1												
110	STEAM TUNNEL UNIT COOLERS	0.85									16.00	9.92	16.00	9.92
111	TURBINE BUILDING BATTERY ROOM SUPPLY FAN & HTG COIL	1			50.00		50.00							
112	TURBINE BUILDING COMPARTMENT EXHAUST FANS	0.85												
113	CONTROL AREA 125 V DC BATTERY ROOM DUCT HEATER	1			16.00		16.00							
114	REMOTE SHUTDOWN PANEL ROOM SUPPLY FAN	0.85			4.00	2.48	4.00	2.48						
115	REMOTE SHUTDOWN PANEL ROOM HEATING COIL	1			10.00		10.00							
116	PLANT LEAK DETECTION SYSTEM HEAT TRACING PANEL (SEE NOTE 26)	1												
117	UNIT VENT RMS HEAT TRACING PANEL	1			15.00		15.00							
118	POST ACCIDENT SAMPLING SYS HEAT TRACING PANEL	1												
119	ELECTRIC UNIT HEATERS	1												
120	TSC ELECTRIC PAN HUMIDIFIER (NOTE 26)	0.85												
121	WING AREA EXHAUST FANS	0.85			16.00	9.92	16.00	9.92						
122	WING AREA SUPPLY FANS	0.85			40.00	24.79	40.00	24.79						
123	SPDS UPS	1					60.00							
	KW		4063.28	2055.87	3827.12	2063.28	4091.99	2190.25	4053.22	2053.36	3181.21	1850.73	3185.27	1853.24
	KVAR		2055.87		2063.28		2190.25		2053.36		1850.73		1853.24	

			Standby Diesel Generator A						Standby Diesel Generator B					
			<10 MIN		10-60 MIN		>60 MIN		<10 MIN		10-60 MIN		>60 MIN	
Item	DESCRIPTION	PF	KW	KVAR	KW	KVAR	KW	KVAR	KW	KVAR	KW	KVAR	KW	KVAR
	KVA		4553.77		4347.87		4641.29		4543.66		3680.40		3685.16	
	PF		0.89		0.88		0.88		0.89		0.86		0.86	

			Standby Diesel Generator C						Standby Diesel Generator D					
			<10 MIN		10-60 MIN		>60 MIN		<10 MIN		10-60 MIN		>60 MIN	
Item	DESCRIPTION	PF	KW	KVAR	KW	KVAR	KW	KVAR	KW	KVAR	KW	KVAR	KW	KVAR
	CLASS 1E LOADS													
1	REACTOR CORE SPRAY PUMPS (Note 8)	0.91	525.41	239.38	525.41	239.38	525.41	239.38						
2	RHR PUMPS (Note 8)	0.89	1002.69	513.69										
3	SAFETY AUX. CLG. SYS. PUMPS (Note 8)	0.909	420.62	192.86	420.62	192.86	420.62	192.86						
4	CORE SPRAY PMP. RM. CLR. UNIT	0.85	12.16	7.54	12.16	7.54	12.16	7.54						
5	MOTOR OPERATED VALVES	0.4	14.81	33.93	14.81	33.93	14.81	33.93						
6	SWGR. RM. UNIT CLR. FANS	0.85	20.27	12.56	20.27	12.56	20.27	12.56						
7	INTAKE STRUCTURE SUPPLY FANS	0.85	32.43	20.10										
8	INTAKE STRUCTURE TRAVELING SCREENS AREA FANS	0.85												
9	RHR PUMP RM UNIT COOLER FANS	0.85	16.22	10.05										
10	RCIC PUMP RM. UNIT COOLERS	0.85												
11	HPCI PUMP RM UNIT COOLERS	0.85												
12	125-V DC BATTERY CHARGERS	0.6	113.85	151.80	113.85	151.80	113.85	151.80						
13	DIESEL AREA BATTERY ROOM EXHAUST FANS	0.85	0.81	0.50	0.81	0.50	0.81	0.50						
14	DIESEL FUEL OIL TRANSFER PUMPS	0.85					4.05	2.51						
15	STATION SERVICE WATER PUMPS (Note 8)	0.875	634.22	350.90	634.22	350.90	634.22	350.90						
16	RB FRVS RECIRCULATION SYSTEM FANS	0.85	121.63	75.38	121.63	75.38	121.63	75.38						
17	CONTROL RM SUPPLY FANS	0.85	32.43	20.10	32.43	20.10	32.43	20.10						
18	208Y/120-V AC XFMRS TO POWER DIST PANELS	0.85	37.50	23.24	37.50	23.24	37.50	23.24						
19	RESERVED FOR FUTURE USE	1												
20	INTAKE STRUCTURE EXHAUST FANS	0.85	32.43	20.10										
21	CONTROL ROOM CHILLED WATER CIRCULATING PUMPS	0.85	48.65	30.15	48.65	30.15	48.65	30.15						
22	CNTRL RM SUPPLY UNIT HTG COILS	1	90.00		90.00		90.00							
23	CONTROL ROOM WATER CHILLERS (Note 10)	0.878	506.00	275.86	506.00	275.86	506.00	275.86						
24	DIESEL GEN RM RECIRC SYSTEMS FANS	0.85	202.72	125.63	202.72	125.63	202.72	125.63						
25	PRIMARY CONTAINMENT INSTRUMENT GAS COMPRESSORS	0.85			12.16	7.54	12.16	7.54						
26	BATTERY CHARGERS, 250-V DC	0.6												
27	CONTROL AREA BATTERY ROOM EXHAUST FANS	0.85	4.05	2.51	4.05	2.51	4.05	2.51						
28	RB FRVS RECIRC UNIT HEATING COILS	1	100.00		100.00		100.00							
29	TRAVELING SCREEN SPRAY WATER BOOSTER PUMPS	0.85	16.22	10.05	16.22	10.05	16.22	10.05						
30	RB FRVS VENT UNIT HEATING COILS	1												
31	CONTROL ROOM SUPPLY SYSTEM RETURN FANS	0.85	24.33	15.08	24.33	15.08	24.33	15.08						
32	CONTROL ROOM EMERGENCY FILTER FANS	0.85	20.27	12.56	20.27	12.56	20.27	12.56						
33	SAFETY AUX COOLING SYSTEM UNIT COOLERS	0.85	12.16	7.54	12.16	7.54	12.16	7.54						
34	FUEL POOL COOLING PUMPS	0.85												

			Standby Diesel Generator C						Standby Diesel Generator D					
			<10 MIN		10-60 MIN		>60 MIN		<10 MIN		10-60 MIN		>60 MIN	
Item	DESCRIPTION	PF	KW	KVAR	KW	KVAR	KW	KVAR	KW	KVAR	KW	KVAR	KW	KVAR
35	CONTROL ROOM EMERGENCY FILTER UNIT ELECTRIC HEATING COILS	1	13.00		13.00		13.00							
36	CONTROL EQUIPMENT ROOM AIR SUPPLY FANS	0.85	202.72	125.63	202.72	125.63	202.72	125.63						
37	RB FRVS VENT SYS FANS	0.85												
38	CONTAINMENT HYDROGEN RECOMBINER	0.85												
39	CONTROL EQIP ROOM SUPPLY UNIT HEATING COILS	1	100.00		100.00		100.00							
40	SERVICE WATER SELF-CLEANING STRAINERS	0.85	0.81	0.50	0.81	0.50	0.81	0.50						
41	STANDBY LIQUID CONTROL PUMPS	0.85												
42	RESERVED FOR FUTURE USE	1												
43	RESERVED FOR FUTURE USE	1												
44	RESERVED FOR FUTURE USE	1												
45	RESERVED FOR FUTURE USE	1												
46	480 V POWER SUPPLY TO CLASS 1E CHILLER PANELS	0.85	4.00	2.48	4.00	2.48	4.00	2.48						
47	TRAVELING SCREENS	0.85	4.05	2.51	4.05	2.51	4.05	2.51						
48	ECCS JOCKEY PUMPS	0.85	8.11	5.03	8.11	5.03	8.11	5.03						
49	MOTOR DRIVEN DIESEL GENERATOR FUEL OIL STANDBY PUMPS	0.85	1.62	1.01	1.62	1.01	1.62	1.01						
50	STANDBY LIQUID CONTROL PUMP ROOM DUCT HEATERS	1												
51	480 V POWER SUPPLY TO HYDROGEN AND OXYGEN ANALYZER PANELS	0.85												
52	250 V DC BATTERY ROOM DUCT HEATERS	1												
53	125 V DC DIESEL AREA BATTERY ROOM DUCT HEATERS	1	21.00		21.00		21.00							
54	HPCI PUMP ROOM DUCT HEATER	1												
55	RCIC PUMP ROOM DUCT HEATER	1												
56	250 V DC BATTERY ROOM DUCT HEATER	1												
57	CLASS 1E PANEL ROOM WATER CHILLERS	0.886												
58	CLASS 1E PANEL ROOM CHILLED WATER PUMPS	0.85												
59	CLASS 1E PANEL ROOM SUPPLY & RETURN AIR FANS	0.85												
60	CLASS 1E PANEL ROOM ELECTRIC HEATERS	1												
61	BATTERY ROOM EXHAUST FANS	0.85												
62	BATTERY ROOM DUCT HEATERS	1	14.00		14.00		14.00							
63	H2/O2 ANALYZER HEAT TRACING PANELS	1	15.00		15.00		15.00							
64	RESERVED FOR FUTURE USE	1												
65	RESERVED FOR FUTURE USE	1												

			Standby Diesel Generator C						Standby Diesel Generator D					
			<10 MIN		10-60 MIN		>60 MIN		<10 MIN		10-60 MIN		>60 MIN	
Item	DESCRIPTION	PF	KW	KVAR	KW	KVAR	KW	KVAR	KW	KVAR	KW	KVAR	KW	KVAR
66	RESERVED FOR FUTURE USE	1												
67	RESERVED FOR FUTURE USE	1												
68	RESERVED FOR FUTURE USE	1												
69	RESERVED FOR FUTURE USE	1												
70	RESERVED FOR FUTURE USE	1												

			Standby Diesel Generator C						Standby Diesel Generator D					
			<10 MIN		10-60 MIN		>60 MIN		<10 MIN		10-60 MIN		>60 MIN	
Item	DESCRIPTION	PF	KW	KVAR	KW	KVAR	KW	KVAR	KW	KVAR	KW	KVAR	KW	KVAR
	NON-CLASS 1E LOADS													
	See Note 11													
71	TURBINE GENERATOR TURNING GEAR OIL PUMP	0.85												
72	STANDBY LIQUID CONTROL SOLUTION OPERATING HEATER	1												
73	DRYWELL COOLING UNIT FANS	0.85												
74	RADWASTE EXHAUST FANS	0.85												
75	ESSENTIAL PLANT LIGHTING	0.9			93.50	45.28	93.50	45.28						
76	CRD WATER PUMPS	0.85			202.72	125.63	202.72	125.63						
77	TURBINE BUILDING BATTERY ROOM EXHAUST FANS	0.85												
78	TURBINE GENERATOR AUX BEARING LIFT PUMPS 9 - 5HP EACH AND	0.85												
	TURNING GEAR - 60 HP													
79	EMERGENCY INSTRUMENT AIR COMPRESSOR	0.85												
80	RADWASTE SUPPLY FANS	0.85												
81	REACTOR BUILDING SUPPLY AIR HANDLING UNITS	0.85												
82	REACTOR BUILDING EXHAUST FANS	0.85												
83	RADWASTE TANK VENT FILTER FANS	0.85												
84	TURBINE BUILDING BATTERY ROOM SUPPLY	0.85												
85	RADWASTE TANK VENT FILTER HEATING COILS	1												
86	CHEMICAL LAB EXHAUST FANS	0.85												
87	DIESEL GENERATOR STARTING AIR COMPRESSORS	0.85			12.16	7.54	12.16	7.54						
88	REACTOR AUX COOLING SYSTEM PUMPS	0.85												
89	125-V DC BATTERY CHARGERS	0.6												
90	125-V DC BATTERY CHARGERS	0.6			38.00	50.67	38.00	50.67						
91	250-V DC BATTERY CHARGERS	0.6												
92	STANDBY LIQUID CONTROL SOL MIXING	1												
93	RFPT AUX LUBE OIL PUMP (NOTE 12) &	0.85												
	TURNING GEAR MOTORS				21.49	13.32	21.49	13.32						
94	RESERVED FOR FUTURE USE	1												
95	208 V/120 V AC XFMRS TO DIST PANELS	0.85			45.00	27.89	45.00	27.89						
96	REACTOR BUILDING FLOOR DRAIN SUMP PUMPS	0.85			8.11	5.03	8.11	5.03						
97	DRYWELL EQUIP DRAIN SUMP PUMPS	0.85												
98	DRYWELL FLOOR DRAIN SUMP PUMPS	0.85												
99	POWER SUPPLY FOR UNIT VENT RADIATION MONITORING SYSTEMS	0.85												

			Standby Diesel Generator C						Standby Diesel Generator D					
			<10 MIN		10-60 MIN		>60 MIN		<10 MIN		10-60 MIN		>60 MIN	
Item	DESCRIPTION	PF	KW	KVAR	KW	KVAR	KW	KVAR	KW	KVAR	KW	KVAR	KW	KVAR
100	POWER SUPPLY FOR DLD RADIATION MONITORING SYSTEMS	0.85			3.50	2.17	3.50	2.17						
101	TURBINE GENERATOR MAIN SEAL OIL PUMP	0.85												
102	TURBINE GENERATOR RECIRC SEAL OIL PUMP	0.85												
103	TURBINE GENERATOR SEAL OIL VACUUM PUMP	0.85												
104	RAWASTE + 24V DC BATTERY ROOM DUCT HEATER	1												
105	CONDENSATE STORAGE TANK HEAT TRACING (SEE NOTE 26)	1			12.00		12.00							
106	TSC SUPPLY SYSTEM FAN	0.85			20.00	12.39	20.00	12.39						
107	TSC SUPPLY SYSTEM HEATING COIL	1			30.00		30.00							
108	TSC EMERGENCY FILTER FAN	0.85			20.00	12.39	20.00	12.39						
109	TSC EMERGENCY FILTER HTG COIL	1			13.00		13.00							
110	STEAM TUNNEL UNIT COOLERS	0.85												
111	TURBINE BUILDING BATTERY ROOM SUPPLY FAN & HTG COIL	1												
112	TURBINE BUILDING COMPARTMENT EXHAUST FANS	0.85												
113	CONTROL AREA 125 V DC BATTERY ROOM DUCT HEATER	1												
114	REMOTE SHUTDOWN PANEL ROOM SUPPLY FAN	0.85												
115	REMOTE SHUTDOWN PANEL ROOM HEATING COIL	1												
116	PLANT LEAK DETECTION SYSTEM HEAT TRACING PANEL (SEE NOTE 26)	1												
117	UNIT VENT RMS HEAT TRACING PANEL	1												
118	POST ACCIDENT SAMPLING SYS HEAT TRACING PANEL	1			15.00		15.00							
119	ELECTRIC UNIT HEATERS	1			24.00		24.00							
120	TSC ELECTRIC PAN HUMIDIFIER (NOTE 26)	0.85			12.97	8.04	12.97	8.04						
121	WING AREA EXHAUST FANS	0.85												
122	WING AREA SUPPLY FANS	0.85												
123	SPDS UPS	1					60.00							
	KW		4426.20	2288.68	3926.04	2042.63	3990.10	2045.14						
	KVAR		2288.68		2042.63		2045.14							

		Standby Diesel Generator C							Standby Diesel Generator D					
			<10 MIN		10-60 MIN		>60 MIN		<10 MIN		10-60 MIN		>60 MIN	
Item	DESCRIPTION	PF	KW	KVAR	KW	KVAR	KW	KVAR	KW	KVAR	KW	KVAR	KW	KVAR
	KVA		4982.91		4425.62		4483.69							
	PF		0.89		0.89		0.89							

Rec. No.	Description	Equip. No.	Horse Power Rating	Required During LOCA 13 Seconds	Process Signal During LOCA	Manually Operated	Not Required During LOCA End CTL Cold Dn D/G With Signal Process	Remarks
1	CORE SPRAY PP SUCT	1BE-HV-F001A	0.70				0.70	
2	CORE SPRAY-OUTROARD INJECT	1BE-HV-F004A	12.80		12.80			Note 1
3	CORE SPRAY INBOARD INJECT	1BE-HV-F005A	12.80		12.80			
4	CORE SPRAY TEST RTN	1BE-HV-F015A	2.60				2.60	
5	CORE SPRAY MIN FLOW	1BE-HV-F031A	0.70				0.70	
6	RHR HX SHELL SIDE OUTLET	1BC-W-F003A	9.90				9.90	
7	RHR PP 1AP202 SUCT	1BC-HV-F004A	1.00				1.00	
8	RHR PP 1AP202 MIN FL BYP	1BC-HV- F007A	0.33				0.33	
9	RHR INJECTION	1BC-HV-F017A	7.80		7.80			
10	RHR CNNMNT SPRAY OUTBD	1BC-HV-F016A	12.80			12.80		
12	RHR CONTMNT SPRAY	1BC-HV-F027A	0.70			0.70		
13	RNR HX SHELL SIDE INLET	1BC-HV-F047A	4.00				4.00	
14	RHR HX SHELL SIDE BYPASS	1BC-HV-F048A	0.24				0.24	
15	RHR HX 1AE205 OUT	1EG-HV-2512A	0.33				0.33	
16	RHR TEST RETURN	1BC-HV-F024A	9.90	9.90				Test Mode
17	RWCU DISCH TO MAIN COND	1BG-HV-F034	0.33				0.33	
18	RWCU INBD SUCT 1SLN	1BG-HV-F001	1.60	1.60				Rev. 7
19	HPCI ST SPLY OUTBD 1SLN	1FD-HV-F003	3.90				3.90	rev.7
20	HPCI BYP V TO COND	1FD-HV-4922	0.13				0.13	
21	RACS RETURN ISLN	1ED-HV-2598	0.33	0.33				
22	RACS SUPPLY ISLN	1ED-HV-2599	0.33	0.33				
23	RACS HX CLG LP "A" SPLY	1EA-HV-2203	1.60	1.60				Rev. 6
24	SPLY HDR INBD ISLN	1KL-HV-5152A	0.13	0.13				
25	FDW TEST CHECK	1AE-HV-F032A	13.00				13.00	
26	SLC STOP CHECK	1BH-HV-F006A	0.33				0.33	
27	RCTR WELL SERV SHUT OFF	0BN-HV-2069	0.70				0.70	
28	HX 1AE202 CLG WTR	1EG-HV-2314A	0.13				0.13	
29	HX 1AE202 CLG WTR	1EG-HV-7921A	0.13				0.13	
30	HX 1AE202 CROSS CONN	1EG-HV-2317A	0.13	0.13				
31	HX 1AE202 CROSS CONN	1EG-HV-7922A	0.13	0.13				
32	SACS 1A1E201 IN	1EG-HV-2491A	0.70				0.70	
33	SACS LP "A" CLG OUT TO TWR	1EA-HV-2357A	2.60				2.60	Rev. 6
34	SACS LP "A: HX A1E201 OUT	1EA-HV-2371A	1.60				1.60	Rev. 6
35	SACS LP "A" RETURN	1EG-HV-2496A	2.60	2.60				
36	SERVICE WTR LOOP "A" DUMP	1EA-HV-2356A	0.33				0.33	
37	H2/O2 ANALY "A" H2 SPLY	1GS-HV-5741A	0.33			0.33		

Rec. No.	Description	Equip. No.	Horse Power Rating	Required During LOCA 13 Seconds	Process Signal During LOCA	Manually Operated	Not Required During LOCA But CTF Load On D/G With Signal Process	Remarks
38	H2/O2 ANALY "A" 1SLN	1GS-HV-4955A	0.33			0.33		
39	H2/O2 ANALY "A" 1SLN	1GS-HV-4959A	0.33			0.33		
40	H2/O2 ANALY "A" 1SLN	1GS-HV-4966A	0.33			0.33		
41	H2/O2 ANALY "A" 1SLN	1GS-HV-5019A	0.33			0.33		
42	RECOMB "A" GAS INBD 1SLN	1GS-HV-5050A	0.33			0.33		
43	RECOMB "A" GAS INBD 1SLN	1GS-HV-5054A	0.33			0.33		
44	RECO048 "A" SCBBR WTR 1SLN	1BC-HV-5055A	0.33			0.33		
45	NBP 1NBD DR TO MN COND	1AB-HV-FO16	0.33	0.33				
46	CPRSR SUCT 1NBD 1SLN	1KL-HV-5148	0.13	0.13				
47	FUEL POOL CLG MKUP WTR	1EA-HV-2234	0.33				0.33	
48	FUEL POOL CLG MKUP WTR	1EA-HV-2236	0.33				0.33	
49	SUPPR. POOL 1SLN	1EE-HV-4652	0.33		0.33			
50	SUPPR. POOL 1SLN	1EE-HV-4680	0.33		0.33			
51	TORUS HI LVL INSTR CUTOFF	1BJ-HV-4803	0.13	0.13				
52	TORUS LO LVL INSTR CUTOFF	1BJ-HV-4804	0.13	0.13				
53	EMER PNEUMATIC SPLY VALVE	1KL-HV-5172A	0.13				0.13	
54	TURB EXN VAC BRKR	1FD-HV-FO75	0.33	0.33				
55	FP FILTER DEMIN BYPASS	1EC-HV-4689A	0.7				0.7	
56	CTMT INBOARD 1SLN VALVE	1SK-HV-4957	0.33	0.33				
57	CTMT INBOARD 1SLN VALVE	1SK-HV-5018	0.13	0.13				
58	FUEL POOL MAKE-UP V "A"	1EC-HV-4647	0.13				0.13	
59	EXPANSION TK AT205 MAKEUP	1EG-HV-2446	0.13				0.13	
60	RHR HEAD SPRAY 1NBD	1BC-HV-F022	1				1	
61	RHR SHUTDOWN CLG	1BC-HV-FO06A	1				1	
62	RHR SHUTDOWN CLG SUCT 1NBD	18C-HV-F009	7.80				7.80	
63	RHR CONTAINMENT SPRAY	18C-HV-F021A	12.80			12.8		
64	STN SERVICE WTR SYS BK WASH	1EA-HV-2197A	0.13				0.13	
65	STN SERVICE WTR SYS DIS MOV	1EA-HV-2198A	2.66				2.66	
66	SSWS SPRAY PP DISH MOV	1EA-HV-2225A	0.13				0.13	

Rec. No.	Description	Equip. No.	Horse Power Rating	Required During LOCA 13 Seconds	Process Signal During LOCA	Manually Operated	Not Required During LOCA But CLTE Load On D/G With Signal Process	Remarks
	Summary Totals		139.28	18.26	34.06	28.94	58.02	
	Conversion to KW (0.746*HP/0.92)		112.94	14.81	27.62	23.47	47.05	
	TOTAL		139.41	18.26	34.06	28.94	58.15	81.26
	KW=0.746*HP/0.92		113.04	14.81	27.62	23.47	47.15	65.89

Notes

1) This Valve does not change position on receipt of a LOCA signal under non-test mode. The load has been included for conservatism.

2) Since all MOVs are of intermittent duty, the worst MOV loading, operating at the same time, during LOCA is 18.26 HP (14.81 KW).

	SDG 'A'			SDG 'B'			SDG 'C'			SDG 'D'			
ALL SDGs In Service - Table 2													
	<10 MIN	10-60 MIN	>60 MIN	<10 MIN	10-60 MIN	>60 MIN	<10 MIN	10-60 MIN	>60 MIN	<10 MIN	10-60 MIN	>60 MIN	Max. load
KW	4063.28	3827.12	3951.99	4053.22	1811.25	1815.30	4426.20	3388.47	3452.52	4426.20	2665.96	2765.01	4426.20
KVAR	2055.87	2063.28	2103.49	2053.36	1186.30	1188.81	2288.68	1795.71	1798.22	2288.68	1415.33	1504.60	2288.68
KVA	4553.77	4347.87	4476.93	4543.66	2165.16	2169.93	4982.91	3834.88	3892.75	4982.91	3018.36	3147.88	4982.91
PF	0.89	0.88	0.88	0.89	0.84	0.84	0.89	0.88	0.89	0.89	0.88	0.88	0.89
SDG "A" Out Of Service - Table 3													
	<10 MIN	10-60 MIN	>60 MIN	<10 MIN	10-60 MIN	>60 MIN	<10 MIN	10-60 MIN	>60 MIN	<10 MIN	10-60 MIN	>60 MIN	Max. load
KW	0.00	0.00	0.00	4053.22	4012.57	4077.44	4426.20	4043.31	4107.37	4426.20	2765.96	2910.01	4426.20
KVAR	0.00	0.00	0.00	2053.36	2256.25	2296.45	2288.68	2108.21	2110.72	2288.68	1415.33	1504.60	2296.45
KVA	0.00	0.00	0.00	4543.66	4603.41	4679.65	4982.91	4559.92	4617.96	4982.91	3107.04	3275.98	4982.91
PF	0.00	0.00	0.00	0.89	0.87	0.87	0.89	0.89	0.89	0.89	0.89	0.89	0.89
SDG "B" Out Of Service -Table 4													
	<10 MIN	10-60 MIN	>60 MIN	<10 MIN	10-60 MIN	>60 MIN	<10 MIN	10-60 MIN	>60 MIN	<10 MIN	10-60 MIN	>60 MIN	Max. load
KW	4063.28	4048.75	4173.62	0.00	0.00	0.00	4426.20	3723.32	3787.38	4426.20	2970.95	3070.00	4426.20
KVAR	2055.87	2138.66	2178.87	0.00	0.00	0.00	2288.68	1917.00	1919.51	2288.68	1599.28	1688.55	2288.68
KVA	4553.77	4578.89	4708.14	0.00	0.00	0.00	4982.91	4187.84	4246.03	4982.91	3374.05	3503.73	4982.91
PF	0.89	0.88	0.89	0.00	0.00	0.00	0.89	0.89	0.89	0.89	0.88	0.88	0.89
SDG "C" Out Of Service - Table 5													
	<10 MIN	10-60 MIN	>60 MIN	<10 MIN	10-60 MIN	>60 MIN	<10 MIN	10-60 MIN	>60 MIN	<10 MIN	10-60 MIN	>60 MIN	Max. load
KW	4063.28	3660.92	3925.78	4053.22	3347.42	3351.47	0.00	0.00	0.00	4426.20	3893.08	3852.13	4426.20
KVAR	2055.87	1907.12	2034.09	2053.36	2006.89	2009.40	0.00	0.00	0.00	2288.68	2020.34	2022.85	2288.68
KVA	4553.77	4127.88	4421.46	4543.66	3902.92	3907.69	0.00	0.00	0.00	4982.91	4386.10	4350.96	4982.91
PF	0.89	0.89	0.89	0.89	0.86	0.86	0.00	0.00	0.00	0.89	0.89	0.89	0.89
SDG "D" Out Of Service - Table 6													
	<10 MIN	10-60 MIN	>60 MIN	<10 MIN	10-60 MIN	>60 MIN	<10 MIN	10-60 MIN	>60 MIN	<10 MIN	10-60 MIN	>60 MIN	Max. load
KW	4063.28	3827.12	4091.99	4053.22	3181.21	3185.27	4426.20	3926.04	3990.10	0.00	0.00	0.00	4426.20
KVAR	2055.87	2063.28	2190.25	2053.36	1850.73	1853.24	2288.68	2042.63	2045.14	0.00	0.00	0.00	2288.68
KVA	4553.77	4347.87	4641.29	4543.66	3680.40	3685.16	4982.91	4425.62	4483.69	0.00	0.00	0.00	4982.91
PF	0.89	0.88	0.88	0.89	0.86	0.86	0.89	0.89	0.89	0.00	0.00	0.00	0.89

SDG Ratings						
	Cont.	2000 Hr	2 Hr	30 Min.		Max.
KW	4430	4737	4873	5316		4426
KVAR	3323	3553	3655	3987		2296
KVA	5538	5921	6091	6645		4983
PF	0.80	0.80	0.80	0.80		

PSEG Nuclear LLC
P.O. Box 236, Hancocks Bridge, New Jersey 08038-0236

PSEG
Nuclear LLC

MDE-01-0016

TO: S. Kobylarz
Supervisor - Electrical/I&C Group

FROM: D. Longo
Supervisor- Mechanical/Civil Group

SUBJECT: **MAXIMUM MOTOR LOADING FOR LOCA & LOP FOR CS, RHR, SACS, SSWS PUMPS**

DATE: May 30, 2001

We have evaluated the maximum brake horsepower for the above safety related pumps as requested for input in the revision of the current Hope Creek diesel load calculation. The results are tabulated as follows:

	LOCA	LO P	Pump Rating
Core Spray Pump (A,B,C,D, P-206)	655 Bhp.	N.A.	700 Bhp
RHR Pump (A.,B,C,D, P-202)	1,250 Bhp.	1,250 Bhp	1,250 Bhp
SAC Pump (A,B,C,D, P-210)	530 Bhp	530 Bhp	600 Bhp
SSWS Pump (A, B, C, D P-502)	800 Bhp*	850 Bhp*	800 Bhp

*See description at section 4 (SSWS Pump).

Calculation E-9, Rev. 7
PAGE 1 OF 7

USER RESPONSIBLE FOR VERIFYING REVISION, STATUS AND CHANGES

In arriving at the above result, the following analysis for each pump has been done and is presented for your reference:

1. **Core Spray Pump (A, B, C, D P-206)**

The two independent Core Spray System (CSS) loops (A&C, B&D), each consisting of two motor driven centrifugal pumps are designed to start upon LOCA signal (i.e. > 1.68 psig high drywell pressure or Low Reactor Pressure Vessel (RPV) level at –129"). The four pumps are sequenced onto the respective vital bus (A, B, C & D). The brake horsepower drawn by the CS pump of a particular loop will be at a maximum when the pump delivers the highest flow into the drywell via the spargers. This occurs when one of the CS pumps in the loop fails to start upon receiving a LOCA signal (single failure), leaving the remaining CS pump in operation against a minimum drywell backpressure (assumed to be at atmospheric pressure or 0 psig). The minimum backpressure is caused by rapid containment depressurization with cooling. The high CS flow is limited by the orifice in the CS pumps common discharge line (Ref: M-52-1). From the CS certified pump data (Ref: PN 1-E21-C001-0378), the highest flow for the pump at 4,015 (1) gpm requires brake hp peaked at 655 h.p. The CS pumps are not required to be operational during LOP event. (Ref: FSAR: 6.3.2.2.3, BE-0016 CS -Hydraulic Analysis).

*Note (1): This is consistent with max. flow value used in FSAR in order to minimize the available NPSH for the pump.

2. **RHR Pump (A, B, C, D P-202)**

The most limiting mode for the RHR pump flow during a LOCA accident is operation in the LPSI mode in conjunction with other ECCS pumps when the required pump flow rate is at its highest in order to restore RPV water level. The LPSI mode of the RHR is automatically activated by a LOCA signal and all above RHR pumps are sequenced onto their respective vital bus. However, because RHR pump is driven by a non-overloading motor (i.e. loading does not increases with pump flow), a maximum brake horsepower is provided which occurs when the pump is operating at approx. 8,500 gpm. (2) From the certified RHR pump curve (Ref: PSBP 324225), this peak motor power is estimated to be 1,250 Bhp. For the same reason that RHR pump loading peaks at lower flow rate, the same peak brake horsepower is given for LOP event during the shutdown cooling mode.

*Note (2): T.S. surveillance testing for each RHP pump at LPSI mode is at 10,000 gpm.

3. **SAC Pump (A, B, C, D P-210)**

LOCA

Upon receiving a LOCA signal, all four SAC pumps (two from each independent loop) start and are sequenced onto their respective vital bus to provide cooling water to the RHR heat exchangers and other safety-related coolers. Analysis (Ref: EG-0046) has been performed to determine the SACS pump run out operating conditions following a LOCA. The most limiting scenario for a SACS pump to maximize its operating flow rate is as follows: one SACS pump is

USER RESPONSIBLE FOR VERIFYING REVISION, STATUS AND CHANGES

placed in operation in a loop due to failure of the standby SACS pump to start concurrent with [4] loss of instrument air (Ref: EG-0047). In such postulated scenario with only one SACS pump in operation to provide flow to all operable heat exchangers (including standby [3] heat exchangers), the maximum flow, as detailed in the calculation EG-0046, is presented in the table below:

Note: 3) T.S. LCO condition (Ref: 3/ 4.7) allows one operable SACS pump be placed in operation in a loop.
4) Postulated loss of instrument air during a LOCA results in the loss of ability of AOV to isolate the standby heat exchangers (Ref: EG-0047).

A SACS Pump	B SACS Pump	C SACS Pump	D SACS Pump
15,887 gpm	15,820 gpm	15,898 gpm	15, 674gpm

The above high flow rate experienced by the operating SACS pump is expected during the ten minutes operation following a LOCA accident during which time operator intervention cannot be credited to isolate the standby heat exchangers or to restore the standby SACS pump.

The certified SACS pump test data (Ref: PM0700-0043) demonstrates the SACS pump operability below its trip set point (low Dp) at 17,000 gpm. At the flow rate, the maximum brake horsepower drawn by the motor has been measured to be 529.3 Bhp. or approx., 530 Bhp. Brake horsepower does not vary significantly between 14,000 to 17,000 gpm.

LOP

Under a postulated LOP event, the instrument air system is assumed to be operational (Ref: EG-0047), the FRVS cooling coils, CS pump room coolers and PASS coolers, which are not required during a LOP event, are isolated (Ref: EG-0047, FSAR 9.2.2.3). The flow rate across the SACS pump in the worst scenario (i.e. one SACS pump per loop per EG-0047) is approx., 14,000gpm. At this flow rate, the brake horsepower drawn by the motor is estimated from the certified pump curve to be 530Bhp (see LOCA section).

4. SSWS Pump A ,B ,C, D P-502)

LOCA

During LOCA coincident with LOP event, the non-safety RACS is isolated by the motor-operated valve HV-2203 from the SACS heat exchangers (Ref: J-10-0). Sufficient cooling is provided with either two (2) SSWS pumps in (1) loop with (2) SACS heat exchangers or one (1) SSWS pump in each independent loop with four (4) SACS heat exchangers. (Ref: EA-003). Therefore, the worst case power consumption is the one SSWS pump operation. From the manufacturer pump curve, this is estimated to be approx. 19,000 gpm with a brake horsepower approx at 794 for B,C & D pump and 834 for A pump (Ref: Appendix I).

Calculation E-9, Rev. 7
PAGE 3 of 7

USER RESPONSIBLE FOR VERIFYING REVISION, STATUS AND CHANGES

LOP

The SSWS pump run out condition has been analyzed (Ref: EA-003) under the most limiting boundary conditions in order to determine the NPSH adequacy for the SSWS pump. During LOP event, the isolation valve (HV-2207) does not receive a LOCA to isolate the RACS from the TACS. Plant condition (e.g. winter) requires only one SSWS pump in each loop be placed in operation. This can result in a single SSWS pump in each loop to service all the operable heat exchangers in both TACS and RACS. In worst boundary case scenario (such as consideration of maximum river level, clean strainers, minimum cooling tower basin level, no fouling in operable heat exchangers), a SSWP can experience high flow rate at approx 25,000gpm (Ref: EA-0003). The manufacturer (Hayward Tyler) factory performance testing on pump of this design indicates brake horsepower requirement at the pump run out condition is 825 Bhp for B,C& D pump and 850 Bhp for A pump (Ref: Appendix I).

Please do not hesitate to let us know should you have any question relative to the power consumption for the above pumps.

PK:imv
Attachment

C Barkley, B.
Crawford, M.
Danak, M.
Fregonese, V.
Kwok, P.
Nag, I.
Morrison, G.
Murphy, J. .
Rowey, J.
NEMFS (N64)
Dept Files

USER RESPONSIBLE FOR VERIFYING REVISION, STATUS AND CHANGES

Appendix 1.

Based on manufacturer data, the brake horsepower of SSWS pump for LOCA case can be computed as follows:

AP-502: S/N UG 49050246-04 (Ref: PSBP 33442)

Brake horsepower = 798 + [(846 - 798)/ (19826 -16519)] * [19000 - 16519]
= 834

CP-502: S/N UG49050246-03 (Ref: PSBP 33440)

Brake horsepower = 773 + [(820 – 773)/ (21635 – 16811)] * [19000 – 16811]
= 794

BP-502: S/N UG49050246-02 (Ref: PSBP 33443)

Brake horsepower = 764.69 + [(801 – 764)/ (19820 – 16517)] * [19000 – 16517]
= 792

DP-502 : S/N UG49050246-01 (Ref: PSBP 33441)

Brake horsepower = 766 + [(804 – 766)/(19820 – 16516)] * [19000 – 16516]
= 794

USER RESPONSIBLE FOR VERIFYING REVISION, STATUS AND CHANGES

Service Water Flow vs. Pressure

05/30/2001

Pump	VTD	S/N	Flow (gpm) 15500 Head (ft)	17000 Head (ft)	15500 Pressure	17000 Pressure
Spare	322848	UG04950246-05	164.26	157.96	71.41	68.67
AP502	322442	UG04950246-04	162.96	155.55	70.84	67.62
BP502	322440	UG04950246-03	164.03	155.77	71.31	67.72
CP502	322443	UG04950246-02	158.96	150.52	69.10	65.43
DP502	322441	UG04950246-01	158.88	150.99	69.07	65.64
		average	**161.82**	**154.16**	**70.35**	**67.02**

USER RESPONSIBLE FOR VERIFYING REVISION, STATUS AND CHANGES

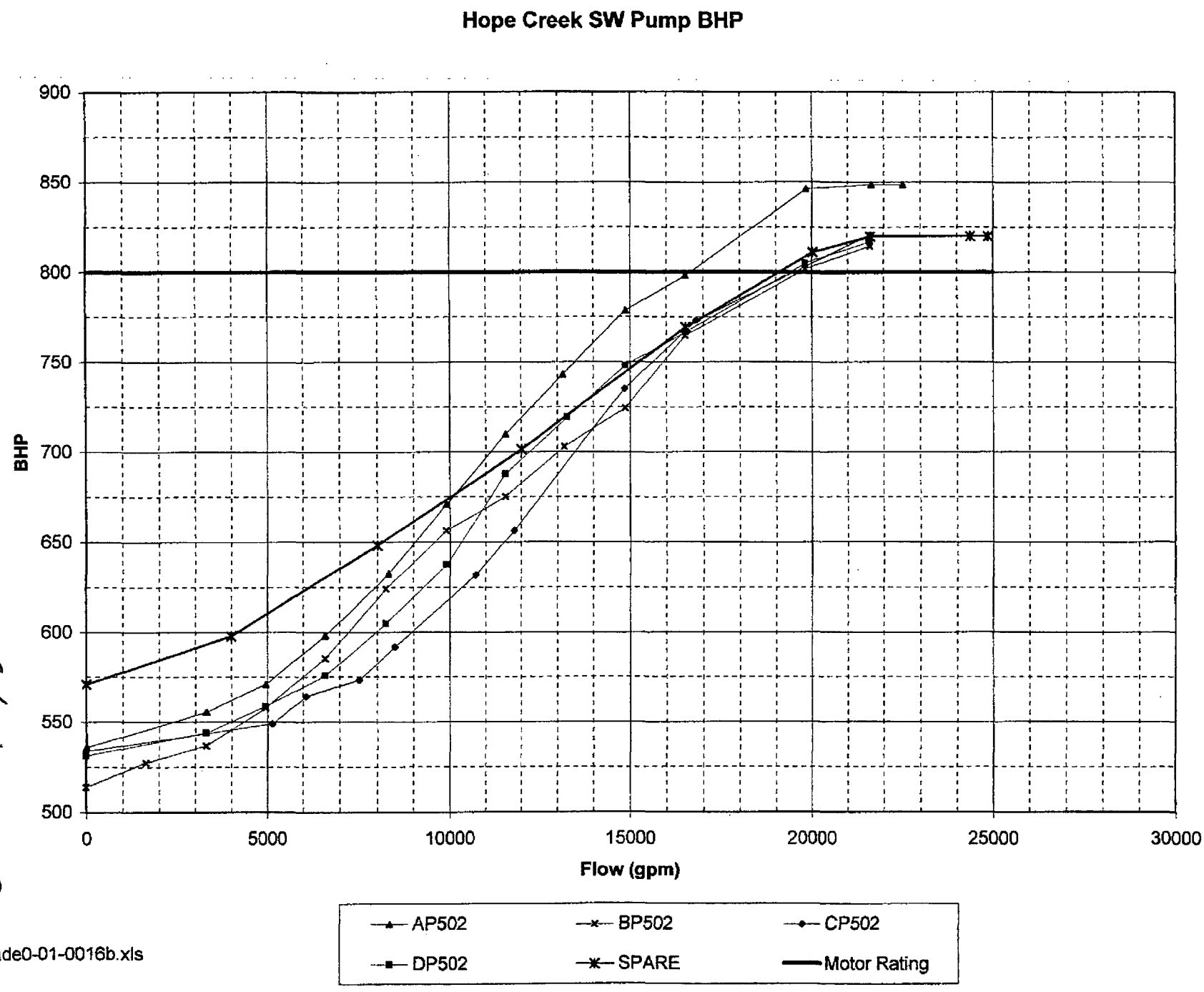

Calculation E-9 Rev. 7
PAGE 7 OF 7

mde0-01-0016b.xls

FORM-1
REGULATORY CHANGE PROCESS DETERMINATION

Document I.D.: E-9(Q) Revision: 8
Title: STANDBY DIESEL GENERATOR SIZING

Activity Description:
Revision 6 of this calculation incorporates the outstanding changes posted against the calculation. See Reference 3Y for the list of CD's. These changes have already received a10CFR50.59 Screen or Evaluation under the respective Design Change Package.

Note that more than one process may apply. If unsure of any answer, contact the cognizant department for guidance.

Activities Affected	No	Yes	Action
1. Does the proposed activity involve a change to the Technical Specifications or the Operating License?	☒	☐	If Yes, contact Licensing; process in accordance with NC.NA-AP.ZZ-0035(Q) LCR No. _____
2. Does the proposed activity involve a change to the Quality Assurance Plan? Examples: • Changes to Chapter 17.2 of UFSAR	☒	☐	If Yes, contact Quality Assessment; process in accordance with ND.QN-AP.ZZ-0003(Q)
3. Does the proposed activity involve a change to the Security Plan? Examples: • Change program in NC.NA-AP.ZZ-0033(Q) • Change indoor/outdoor security lighting • Placement of component or structure (permanent or temporary) within 20 feet of perimeter fence • Obstruct field of view from any manned post • Interfere with security monitoring device capability • Change access to any protected or vital area • Modify safeguards systems or equipment	☒	☐	If Yes, contact Security Department; process in accordance with NC.NA-AP.ZZ-0033(Q)
4. Does the proposed activity involve a change to the Emergency Plan? Examples: • Change ODCM/accident source term • Change liquid or gaseous effluent release path • Affect radiation monitoring instrumentation or EOP/AOP setpoints used in classifying accident severity • Affect emergency response facilities or personnel, including control rm • Affect communications, computers, information systems or Met tower	☒	☐	If Yes, contact Emergency Preparedness
5. Does the proposed activity involve a change to the ISI Program Plan? Examples: • Affect Nuclear Class 1, 2, or 3 Piping, Vessels, or Supports (Guidance in NC.DE-AP.ZZ-0007(Q) Form-11)	☒	☐	If Yes, contact Reliability Programs ISI/IST; process in accordance with NC.NA-AP.ZZ-0027(Q)
6. Does the proposed activity involve a change to the IST Program Plan? Examples: • Affect the design or operating parameters of a Nuclear Class 1, 2, or 3 Pump or Valve (Guidance in NC.DE-AP.ZZ-0007(Q) Form-15)	☒	☐	If Yes, contact Reliability Programs ISI/IST; process in accordance with NC.NA-AP.ZZ-0070(Q)

USER RESPONSIBLE FOR VERIFYING REVISION, STATUS AND CHANGES

FORM-1
REGULATORY CHANGE PROCESS DETERMINATION

Document I.D.: E-9(Q) Revision: 8
Title: STANDBY DIESEL GENERATOR SIZING

Activities Affected	No	Yes	Action
7. Does the proposed activity involve a change to the Fire Protection Program? Examples: • Change program in NC.DE-PS.ZZ-0001(Q) • Change combustible loading of safety related space • Change or affect fire detection system • Change or affect fire suppression system/component • Change fire doors, dampers, penetration seal or barriers • See NC.DE-AP.ZZ-0007, Forms 3, 4 and 14 for details	☒	☐	If Yes, contact Design Engineering; process in accordance with NC.DE-PS.ZZ-0001(Q)
8. Does the proposed activity involve Maintenance which restores SSCs to their original design and configuration? Examples: • CM or PM activity • Implements an approved Design Change? • Troubleshooting (which does not require 50.59 screen per SH.MD-AP.ZZ-0002)	☒	☐	If Yes, process in accordance with NC.WM-AP.ZZ-0001(Q)
9. Is the proposed activity a temporary change (T-Mod) which ***meets all the following conditions***? • Directly supports maintenance and is NOT a compensatory measure to ensure SSC operability. • Will be in effect at power operation **less than 90 days.** • Plant will be restored to design configuration upon completion. • SSCs will NOT be operated in a manner that could impact the function or operability of a safety related or Important-to-Safety system.	☒	☐	If Yes, contact Engineering; process in accordance with NC.DE-AP.ZZ-0030(Q)
10. Does the proposed activity consist of changes to maintenance procedures which do NOT affect SSC design, performance, operation or control? **Note:** Procedure information affecting SSC design, performance, operation or control, including Tech Spec required surveillance and inspection, ***require 50.59 screening***. Examples include acceptance criteria for valve stroke times or other SSC function, torque values, and types of materials (e.g., gaskets, elastomers, lubricants, etc.)	☒	☐	If Yes, process in accordance with NC.NA-AP.ZZ-0001(Q)
11. Does the proposed activity involve a *minor* UFSAR change (including documents incorporated by reference)? Examples: • Reformatting, simplification or clarifications that do not change the meaning or substance of information • Removes obsolete or redundant information or excessive detail • Corrects inconsistencies within the UFSAR • Minor correction of drawings (such as mislabeled ID)	☒	☐	If Yes, process in accordance with NC.NA-AP.ZZ-0035(Q)
12. Does the proposed activity involve a change to an Administrative Procedure (NAP, SAP or DAP) governing the conduct of station operations? Examples: • Organization changes/position titles • Work control/ modification processes	☒	☐	If Yes, process in accordance with NC.NA-AP.ZZ-0001(Q) and NC.DM-AP.ZZ-0001(Q)

USER RESPONSIBLE FOR VERIFYING REVISION, STATUS AND CHANGES

modifications 60003623 and 60003631.

FORM-1
REGULATORY CHANGE PROCESS DETERMINATION

Document I.D.: E-9(Q) Revision: 8
Title: STANDBY DIESEL GENERATOR SIZING

Activities Affected	No	Yes	Action
13. Does the proposed activity involve a change to a regulatory commitment?	☒	☐	If Yes, contact Licensing and process in accordance with NC.NA-AP.ZZ-0030(Q)
14. Does the activity impact other programs controlled by regulations, operating license or Tech Spec? Examples: • Chemical Controls Program • NJ "Right-to-know" regulations • OSHA regulations • NJPDES Permit conditions • State and/or local building, electrical, plumbing, storm water management or "other" codes and standards • 10CFR20 occupational exposure	☒	☐	If Yes, process in accordance with applicable procedures such as: NC.NA-AP.ZZ-0038(Q) NC.LR-AP.ZZ-0037(Q)
15. Has the activity already received a **10CFR50.59 Screen or Evaluation** under another process? Examples: • Calculation • Design Change Package or OWD change • Procedure for a Test or Experiment • DR/Nonconformance • Incorporation of previously approved UFSAR change	☐	☒	Take credit for **10CFR50.59 Screen or Evaluation** already performed. ID: See Explanation Below

If any other program or regulation *may be* affected by the proposed activity, contact the department indicated for further review in accordance with the governing procedure. If responsible department determines program is not affected, attach written explanation.

If ALL of the answers on the previous pages are "No," then check A below:

A. [ ] None of the activity is controlled by any of the processes above, therefore a 10CFR50.59 review **IS** required. Complete a 10CFR50.59 screen.

If one or more of the answers on the previous pages are "Yes," then check either B or C below as appropriate and explain the regulatory processes which govern the change:

B. [X] All aspects of the activity are controlled by one or more of the processes above, therefore a 10CFR50.59 review **IS NOT** required.

C. [ ] Only part of the activity is controlled by the processes above, therefore a 10CFR50.59 review **IS** required. Complete a 50.59 screen.

Explanation: This activity incorporates outstanding change papers. These changes have already received a10CFR50.59 Screen or Evaluation under the respective Design Change Package. The outstanding change papers incorporated are associated with modifications 80003623 and 80003631.

Preparer: S. Savar (Printed Name) [signature] (Signature) 8/23/04 (Date)

Reviewer: LAMIS FLEISCHER [signature] 8/24/04

USER RESPONSIBLE FOR VERIFYING REVISION, STATUS AND CHANGES

FORM-2

COMMENT / RESOLUTION FORM
FOR DESIGN DOCUMENT
REVIEW/CHECKING OR DESIGN VERIFICATION
(SAP Standard Text Key "NR/CDV2")

REFERENCE DOCUMENT NO. /REV. Calculation E-9/Rev. 8

COMMENTS
The comments ranged from minor typo, to clarifying the attachments vs. tables.

RESOLUTION
Correcting typos, and revised tables to add as attachments.

ACCEPTANCE OF RESOLUTION

The correction is acceptable. No impacts were found on other calculation that is either considered input or output to this calculation. The margin for is not affected.

Lamis Fleischer	8/24/2004	Saeed Sovar	8/24/04
SUBMITTED BY	DATE	RESOLVED BY	DATE

Page 1 of 1

USER RESPONSIBLE FOR VERIFYING REVISION, STATUS AND CHANGES

FORM-1
(Page 2 of 3)

CERTIFICATION FOR DESIGN VERIFICATION
(SAP Standard Text Key "NR/CDV1")

Reference No. E--9/R8

SUMMARY STATEMENT

This Design Verification was performed on revision 8 of this Calculation. Revision 8 incorporates outstanding changes to this Calculation.

This verification is a combined Independent Design Verification and a line by line peer review of incorporated changes, in accordance with NC.CC-AP.ZZ-0010(Q).

The changes incorporated by this revision include changes to MOV stroke time and the notes associated with it.

The changes incorporated by this revision do not change the scope or intent of this design calculation. No impact on other calculations and procedures.

General changes were made to the calculation to bring it up to date with current calculation procedure.

The design verification checklist was reviewed to ensure that all issues have been addressed.

Based on the level of verification performed, as described above, this Design Calculation is correct, the outputs (conclusions) are correct based on the inputs, proper procedures were used in its preparation, and comments were satisfactory resolved.

Page 1 of 2

USER RESPONSIBLE FOR VERIFYING REVISION, STATUS AND CHANGES

FORM-1
(Page 2 of 3)

CERTIFICATION FOR DESIGN VERIFICATION
(SAP Standard Text Key "NR/CDV1")

Each individual named below in the right column hereby certifies that the design verification for the subject document **or** document portion has been completed, the questions from the generic checklist have been reviewed and addressed as appropriate, and all comments have been adequately incorporated. The top right column individual is the Lead Design Verifier. SAP Order/Operation final confirmations are the legal equivalent of signatures.

Mehdi Tadjalli Design Verifier Assigned By (print name of Manager/Director)*	Lamis Fleischer 8/24/04 Name of Design Verifier* / Date
Design Verifier Assigned By (print name of Manager/Director)*	Name of Design Verifier* / Date
Design Verifier Assigned By (print name of Manager/Director)*	Name of Design Verifier* / Date
Design Verifier Assigned By (print name of Manager/Director)*	Name of Design Verifier* / Date

*If the Manager/Supervisor acts as the Design Verifier, the name of the next higher level of technical management is required in the left column.

Page 2 of 2

USER RESPONSIBLE FOR VERIFYING REVISION, STATUS AND CHANGES

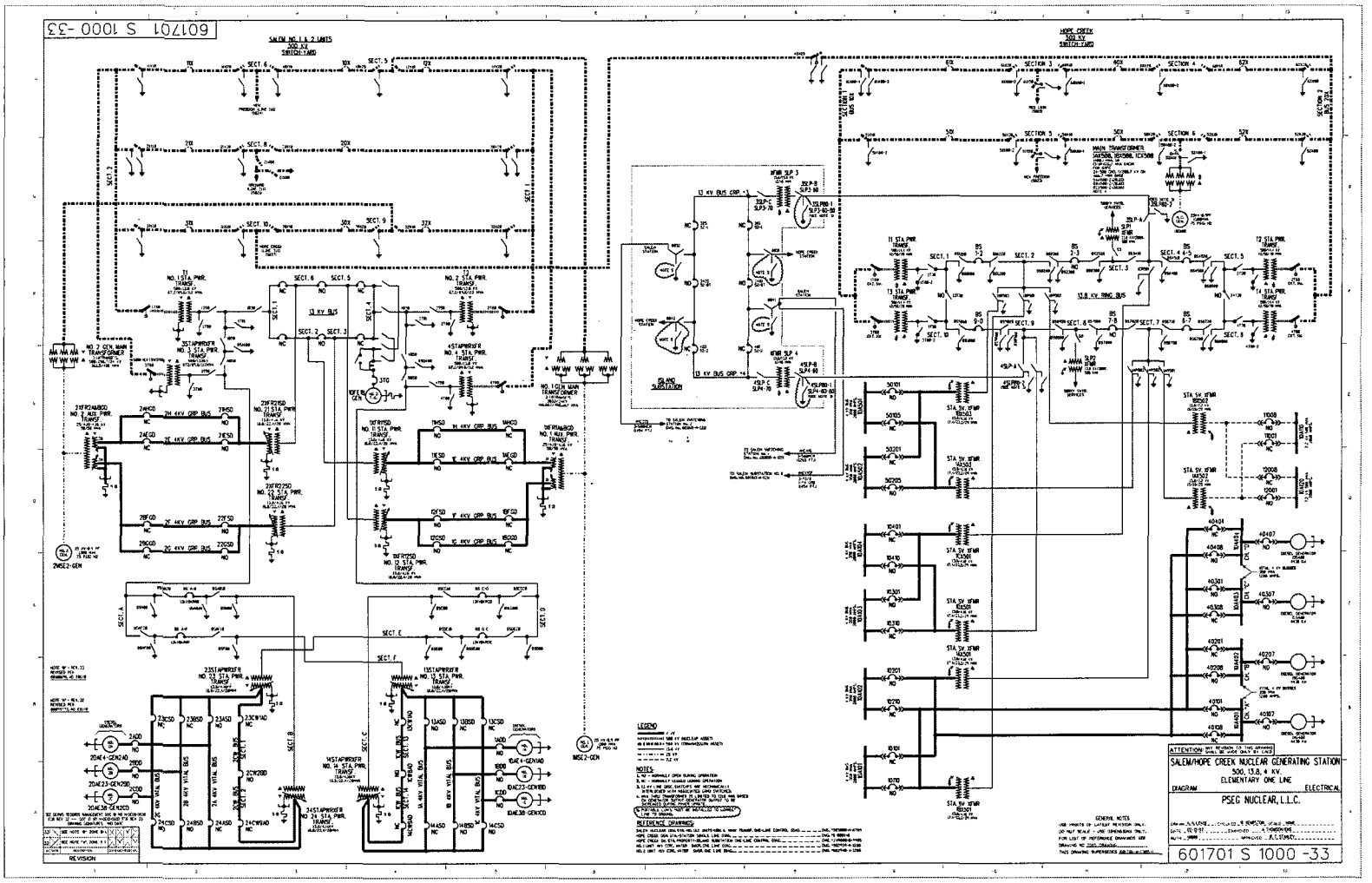
601701 S 1000 -33
SALEM NO. 1 & 2 UNITS
500 KV
SWITCH-YARD
HOPE CREEK
500 KV
SWITCH-YARD
13 KV BUS
13.8 KV RING BUS
ISLAND SUBSTATION
SALEM/HOPE CREEK NUCLEAR GENERATING STATION
500, 13.8, 4 KV.
ELEMENTARY ONE LINE
DIAGRAM
ELECTRICAL
PSEG NUCLEAR, L.L.C.
601701 S 1000 -33

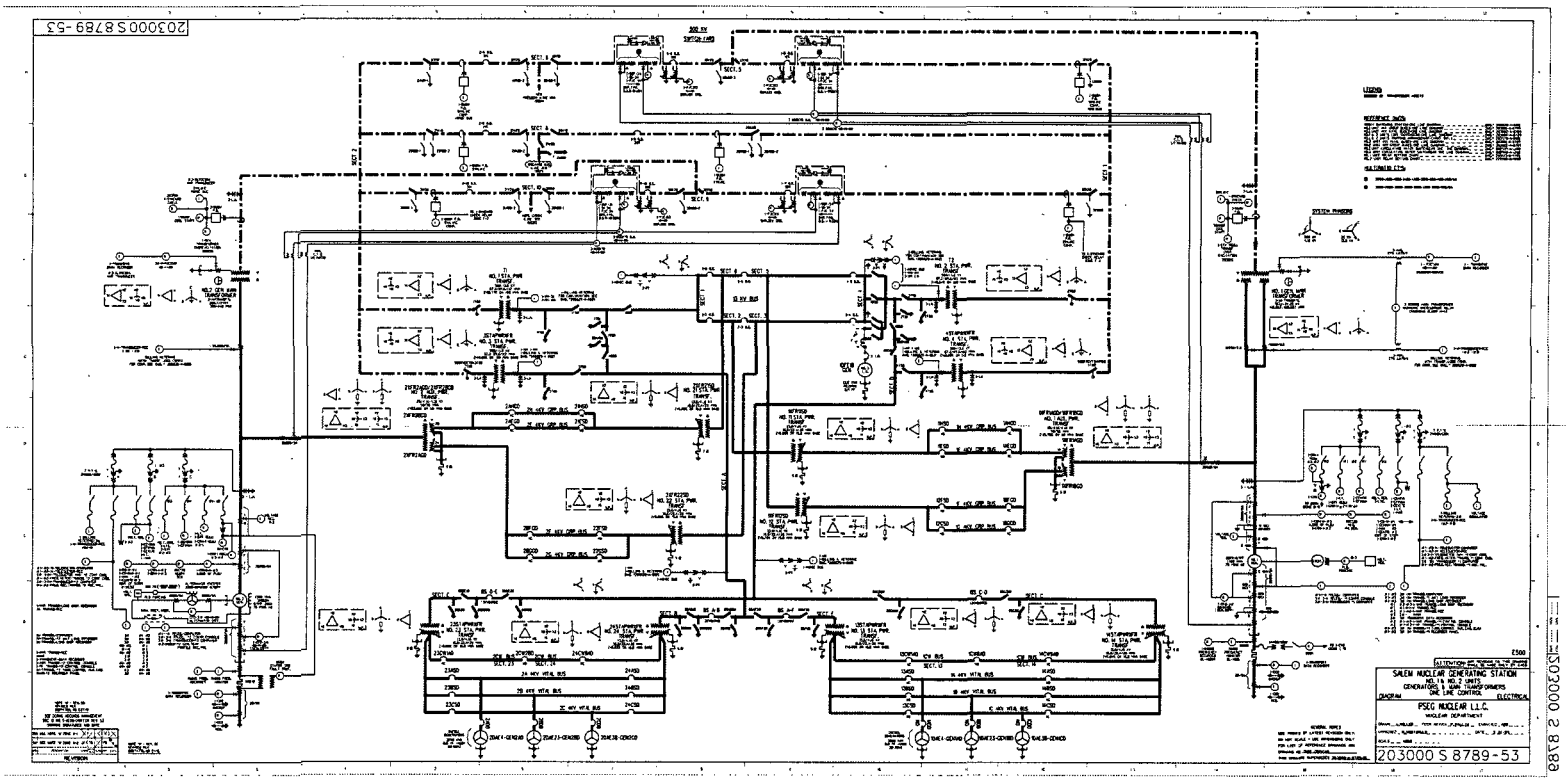
203000S8789-53
SALEM NUCLEAR GENERATING STATION
NO.1 & NO.2 UNITS
GENERATORS & MAIN TRANSFORMERS
ONE LINE CONTROL ELECTRICAL DIAGRAM
PSEG NUCLEAR L.L.C.
NUCLEAR DEPARTMENT
203000 S 8789-53

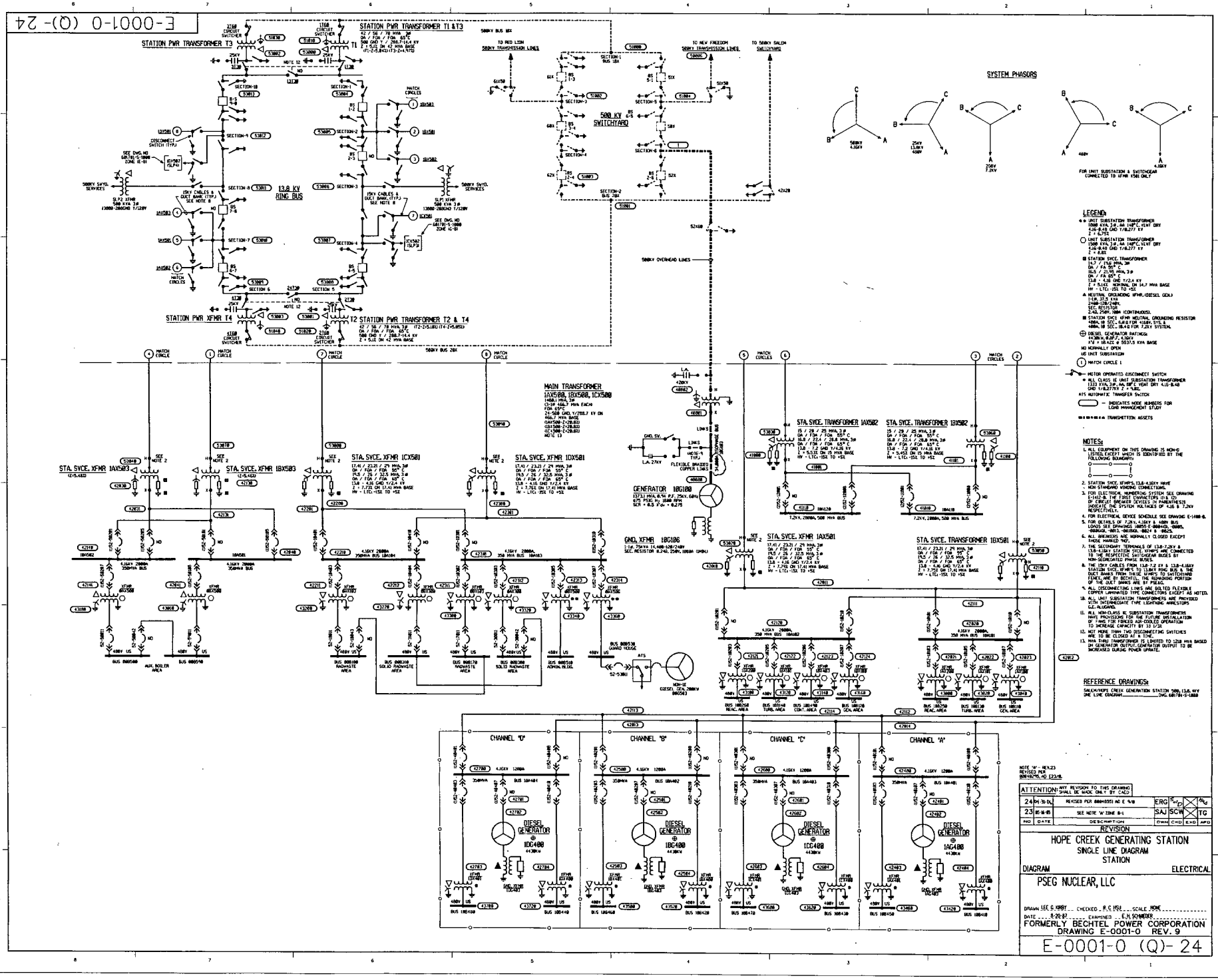
E-0001-0 (Q)-24
STATION PWR TRANSFORMER T3
STATION PWR TRANSFORMER T1 & T3
STATION PWR XFMR T4
T2 STATION PWR TRANSFORMER T2 & T4
13.8 KV RING BUS
500 KV SWITCHYARD
SYSTEM PHASORS
MAIN TRANSFORMER
1AX500, 1BX500, 1CX500
GENERATOR 1BG100
GND. XFMR 1BG106
STA. SVCE. XFMR 1CX501
STA. SVCE. XFMR 1DX501
STA. SVCE. XFMR 1AX503
STA. SVCE. XFMR 1BX503
STA. SVCE. TRANSFORMER 1AX502
STA. SVCE. TRANSFORMER 1BX502
STA. SVCE. XFMR 1AX501
STA. SVCE. TRANSFORMER 1BX501
CHANNEL "D"
CHANNEL "B"
CHANNEL "C"
CHANNEL "A"
DIESEL GENERATOR 1DG400
DIESEL GENERATOR 1BG400
DIESEL GENERATOR 1CG400
DIESEL GENERATOR 1AG400
LEGEND
NOTES:
REFERENCE DRAWINGS:
ATTENTION: ANY REVISION TO THIS DRAWING SHALL BE MADE ONLY BY CAD
24 04-30-01 REVISED PER 8004-8551 AO E 9/8 ERG SAJ
23 05-16-95 SEE NOTE "W" ZONE B-1 SAJ SCW TG
NO. DATE DESCRIPTION DWN CKD EXD APD
REVISION
HOPE CREEK GENERATING STATION
SINGLE LINE DIAGRAM
STATION
DIAGRAM ELECTRICAL
PSEG NUCLEAR, LLC
DRAWN LEE G. KIRBY CHECKED R.C. HYLE SCALE NONE
DATE 8-20-87 EXAMINED E.H. SCHNEIDER
FORMERLY BECHTEL POWER CORPORATION
DRAWING E-0001-0 REV. 9
E-0001-0 (Q)-24
E-0001-0

LIST OF REGULATORY COMMITMENTS

The following table identifies those actions committed to by PSEG in this document. Any other statements in this submittal are provided for information only purposes and are not considered to be regulatory commitments.

Regulatory Commitment	Committed Date	Commitment Type	
		One-Time Action (Yes/No)	Programmatic (Yes/No)
The following compensatory actions, which will be included in the TS Bases, will be applicable during the extended AOT for EDG A&B: 1. When the A EDG is removed from service for an extended 14 day AOT, the C EDG shall be operable. When the B EDG is removed from service for an extended 14 day AOT, the D EDG shall be operable. 2. When either the A or B EDG is removed from service for an extended 14 day AOT, both HPCI and RCIC shall be operable. 3. Any component testing or maintenance that increases the likelihood of a plant transient shall be avoided during the extended 14 day AOT. This encompasses work activities categorized as Production Risk. 4. Voluntary entry into this LCO action statement should not be scheduled if adverse weather conditions are expected. 5. Availability of the GTG will be checked before entering any A or B EDG extended 14 day AOT.	Concurrent with approval and subsequent implementation of this proposed license amendment	No	Yes