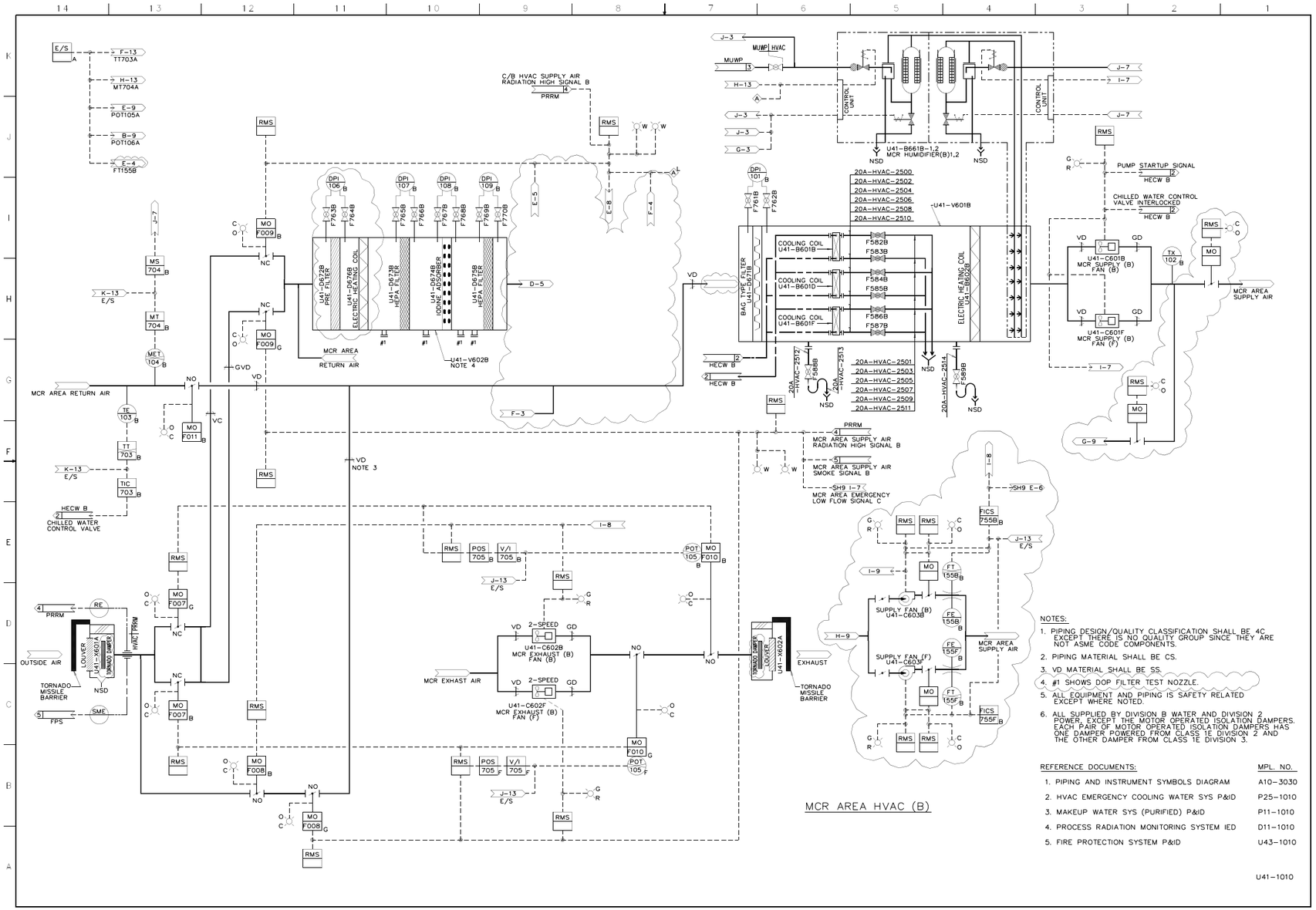

Figure 9.4-1 – Control Building HVAC Flow Diagram (Sheet 1 of 5)

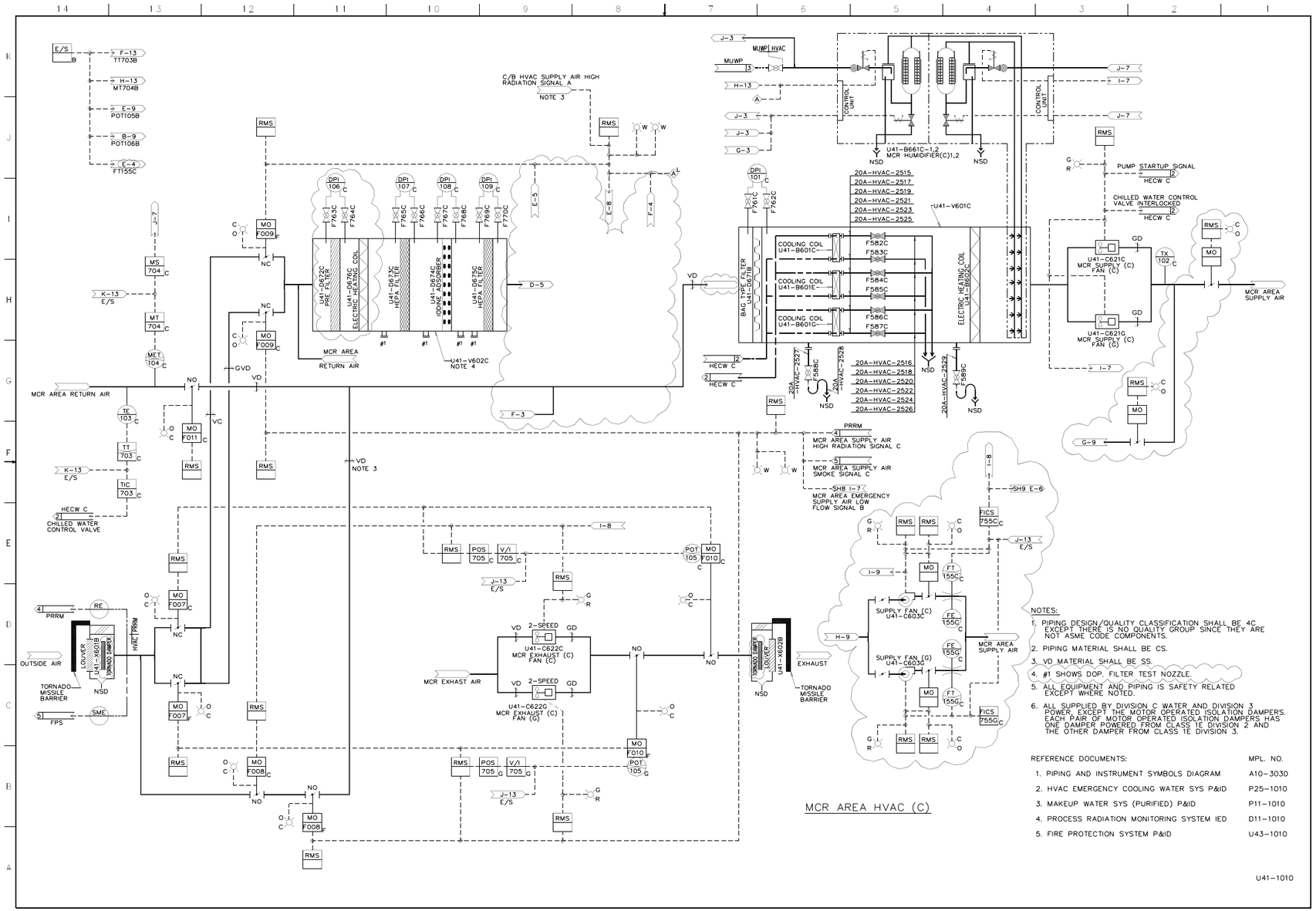

Figure 9.4-1 – Control Building HVAC Flow Diagram (Sheet 2 of 5)

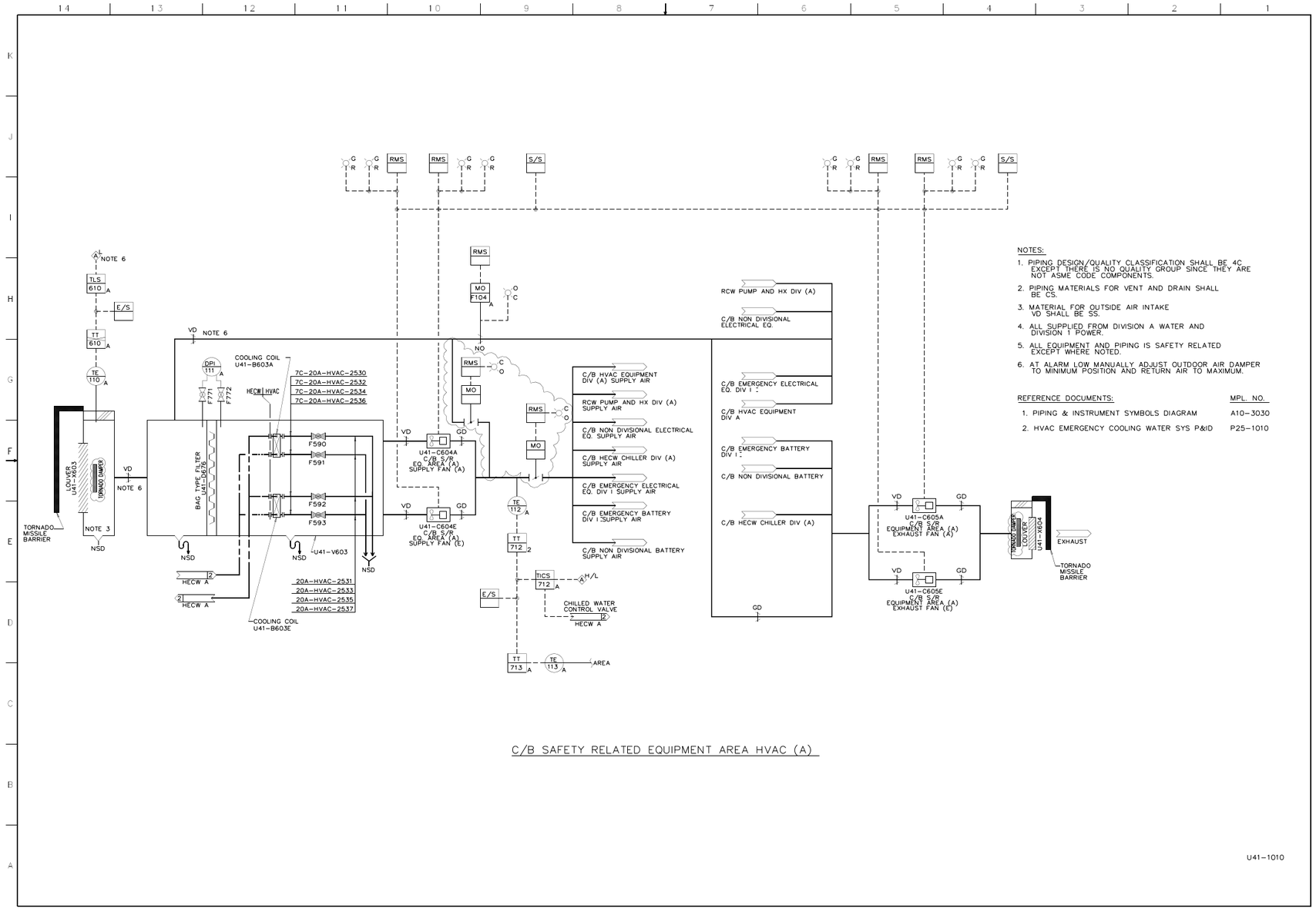

Figure 9.4-1 – Control Building HVAC Flow Diagram (Sheet 3 of 5)

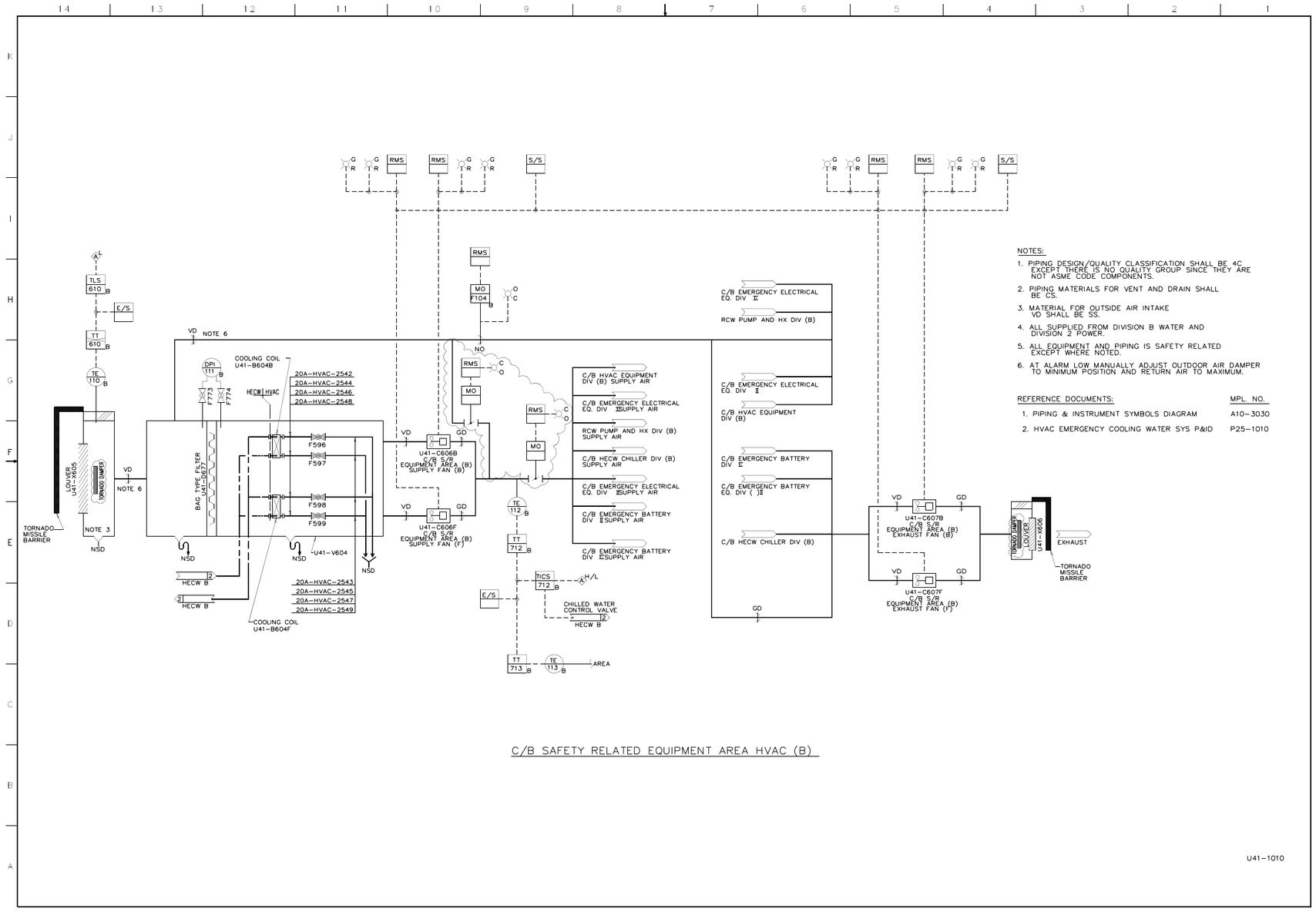

Figure 9.4-1 – Control Building HVAC Flow Diagram (Sheet 4 of 5)

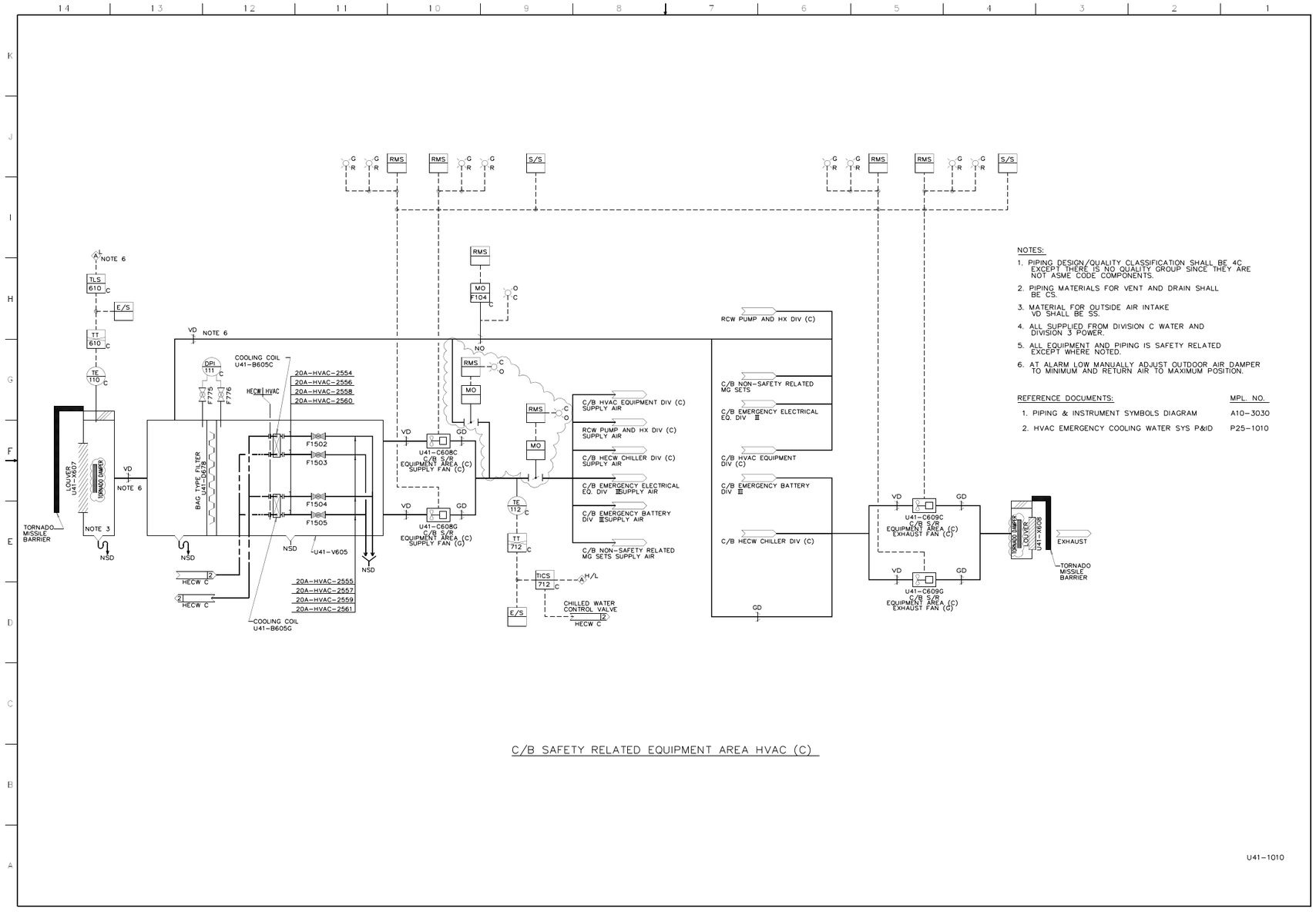

Figure 9.4-1 – Control Building HVAC Flow Diagram (Sheet 5 of 5)

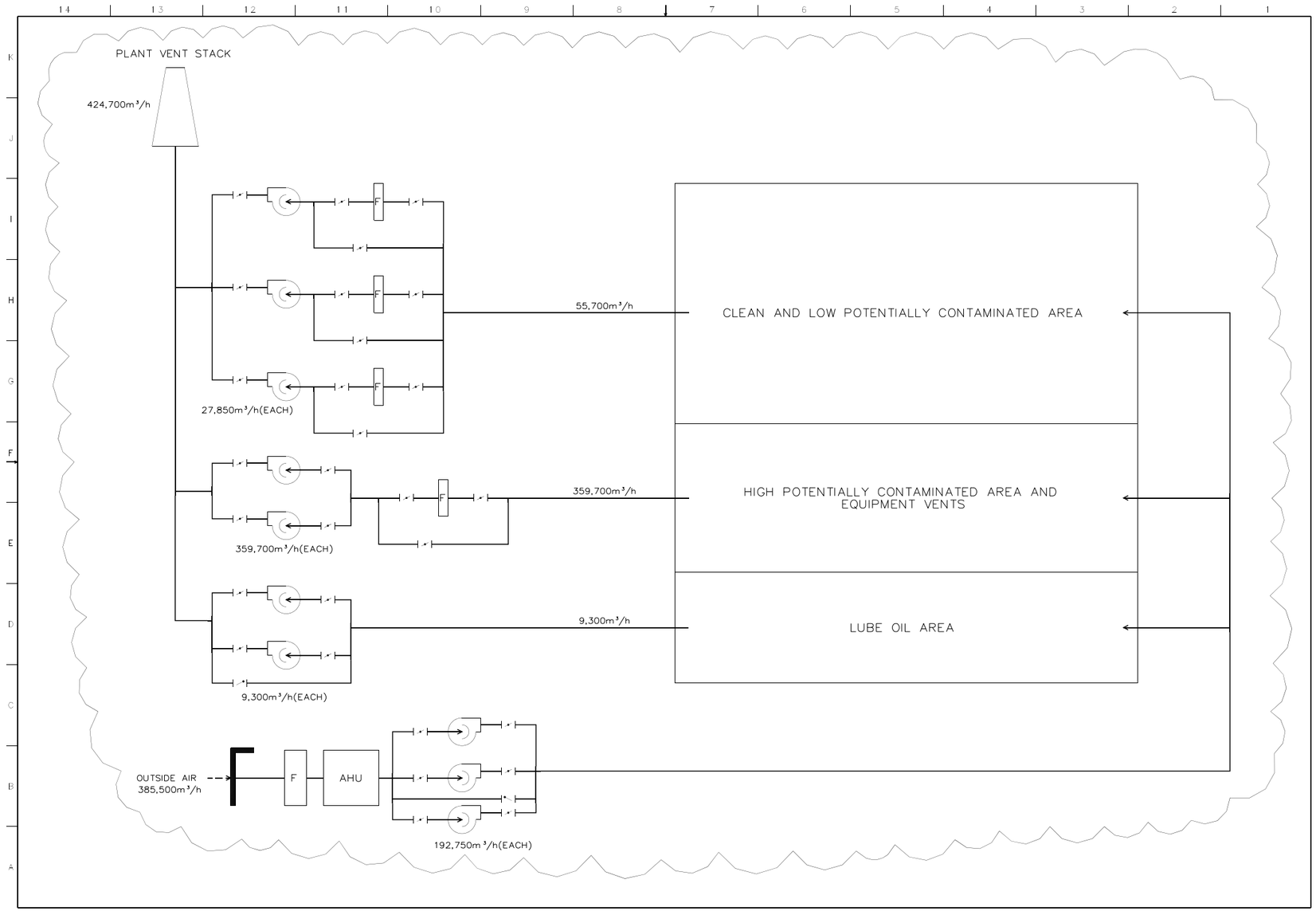

Figure 9.4-2a – Turbine Building Ventilation System Air Flow Diagram

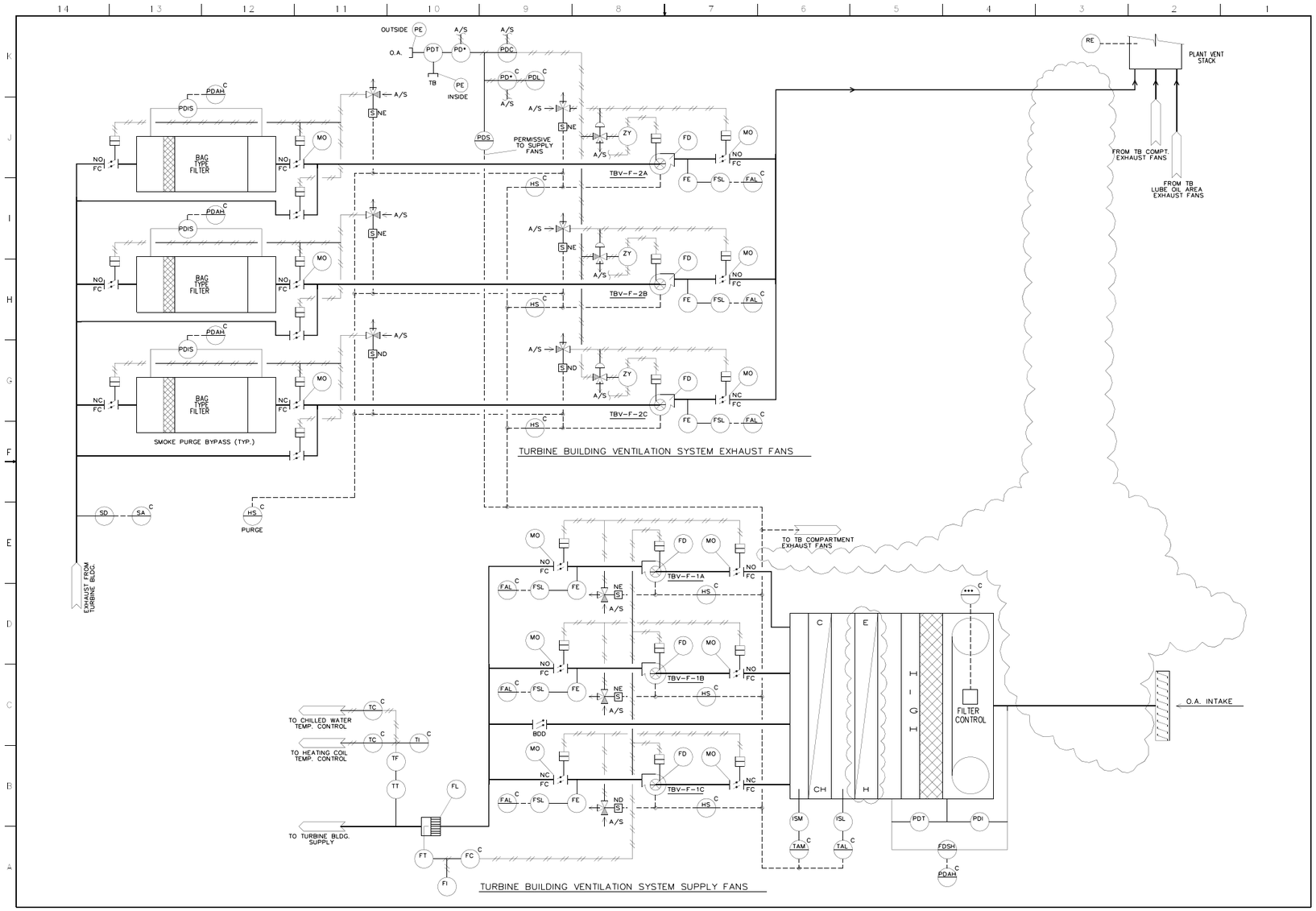

Figure 9.4-2b – Turbine Building Ventilation System Control Diagram (Sheet 1 of 2)

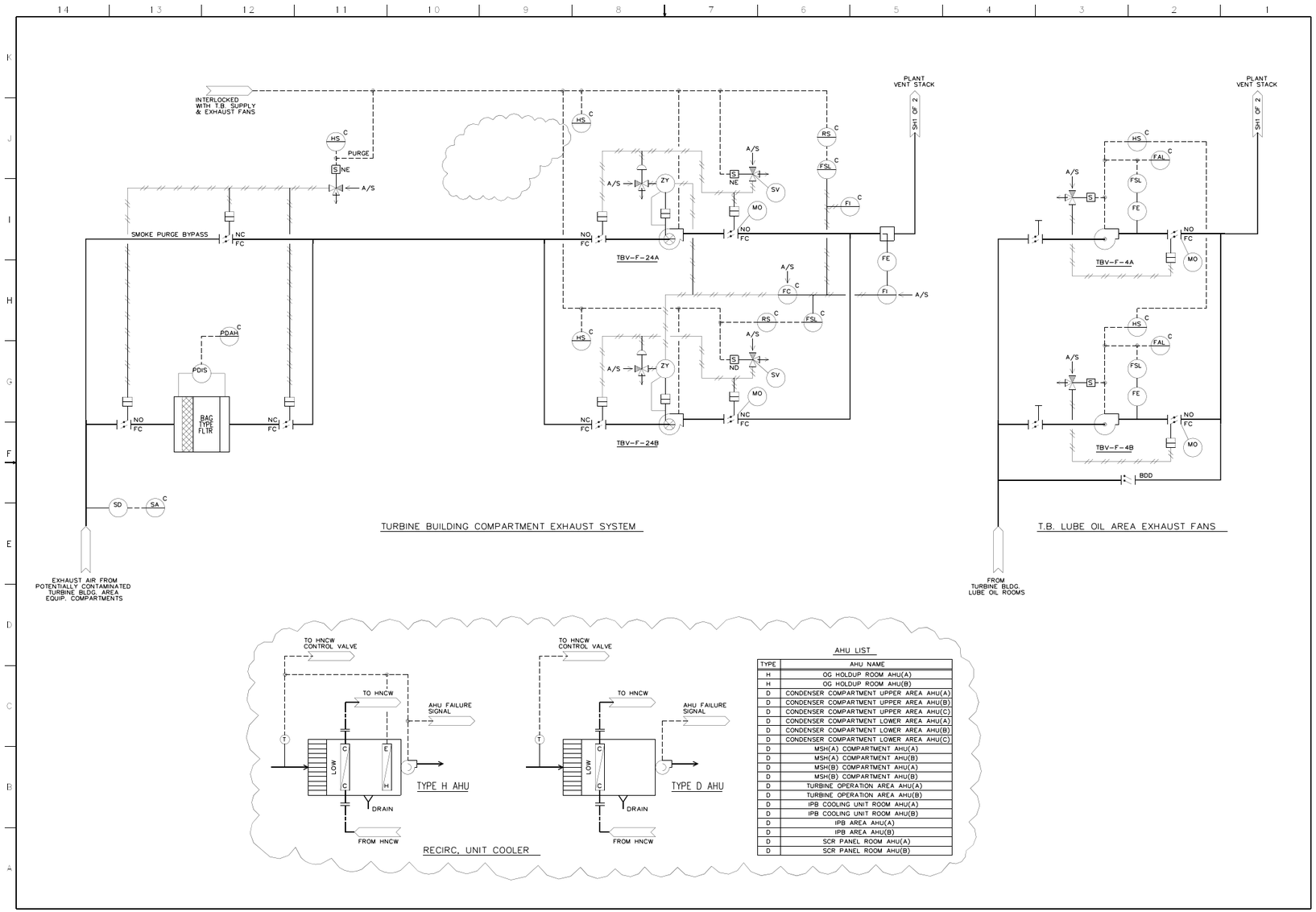

AHU LIST

TYPE	AHU NAME
H	OG HOLDUP ROOM AHU(A)
H	OG HOLDUP ROOM AHU(B)
D	CONDENSER COMPARTMENT UPPER AREA AHU(A)
D	CONDENSER COMPARTMENT UPPER AREA AHU(B)
D	CONDENSER COMPARTMENT UPPER AREA AHU(C)
D	CONDENSER COMPARTMENT LOWER AREA AHU(A)
D	CONDENSER COMPARTMENT LOWER AREA AHU(B)
D	CONDENSER COMPARTMENT LOWER AREA AHU(C)
D	MSH(A) COMPARTMENT AHU(A)
D	MSH(A) COMPARTMENT AHU(B)
D	MSH(B) COMPARTMENT AHU(A)
D	MSH(B) COMPARTMENT AHU(B)
D	TURBINE OPERATION AREA AHU(A)
D	TURBINE OPERATION AREA AHU(B)
D	IPB COOLING UNIT ROOM AHU(A)
D	IPB COOLING UNIT ROOM AHU(B)
D	IPB AREA AHU(A)
D	IPB AREA AHU(B)
D	SCR PANEL ROOM AHU(A)
D	SCR PANEL ROOM AHU(B)

Figure 9.4-2b – Turbine Building Ventilation System Control Diagram (Sheet 2 of 2)

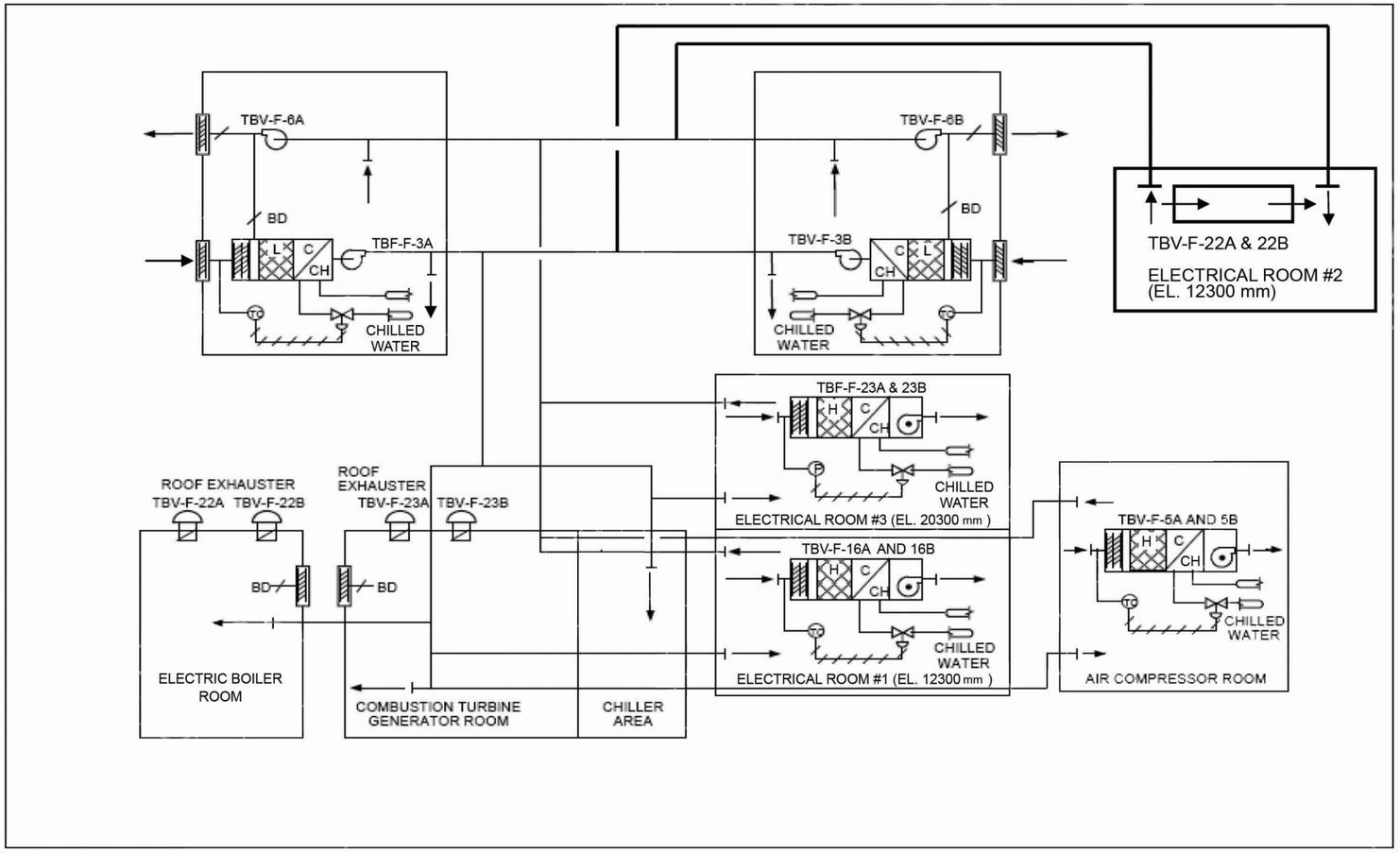

Figure 9.4-2c – Electrical Building HVAC System Diagram Turbine Building Electrical Equipment Areas (EEA) HVAC System Diagram

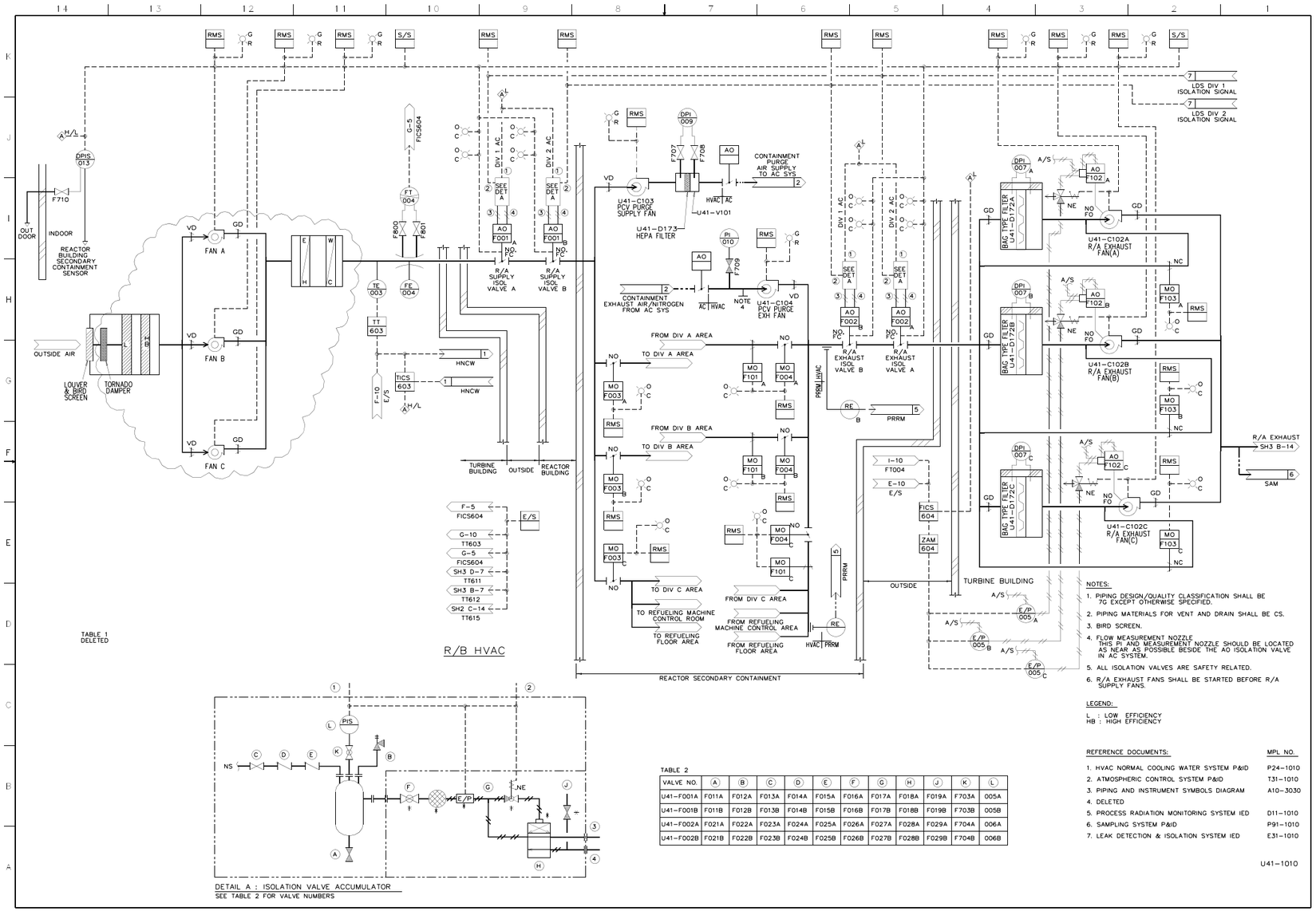

NOTES:

1. PIPING DESIGN/QUALITY CLASSIFICATION SHALL BE 7G EXCEPT OTHERWISE SPECIFIED.
2. PIPING MATERIALS FOR VENT AND DRAIN SHALL BE CS.
3. BIRD SCREEN.
4. FLOW MEASUREMENT NOZZLE THIS PI AND MEASUREMENT NOZZLE SHOULD BE LOCATED AS NEAR AS POSSIBLE BESIDE THE AO ISOLATION VALVE IN AC SYSTEM.
5. ALL ISOLATION VALVES ARE SAFETY RELATED.
6. R/A EXHAUST FANS SHALL BE STARTED BEFORE R/A SUPPLY FANS.

LEGEND:

L : LOW EFFICIENCY
HB : HIGH EFFICIENCY

TABLE 2

VALVE NO.	(A)	(B)	(C)	(D)	(E)	(F)	(G)	(H)	(J)	(K)	(L)
U41-F001A	F011A	F012A	F013A	F014A	F015A	F016A	F017A	F018A	F019A	F703A	005A
U41-F001B	F011B	F012B	F013B	F014B	F015B	F016B	F017B	F018B	F019B	F703B	005B
U41-F002A	F021A	F022A	F023A	F024A	F025A	F026A	F027A	F028A	F029A	F704A	006A
U41-F002B	F021B	F022B	F023B	F024B	F025B	F026B	F027B	F028B	F029B	F704B	006B

REFERENCE DOCUMENTS:	MPL NO.
1. HVAC NORMAL COOLING WATER SYSTEM P&ID	P24-1010
2. ATMOSPHERIC CONTROL SYSTEM P&ID	T31-1010
3. PIPING AND INSTRUMENT SYMBOLS DIAGRAM	A10-3030
4. DELETED	
5. PROCESS RADIATION MONITORING SYSTEM IED	D11-1010
6. SAMPLING SYSTEM P&ID	P91-1010
7. LEAK DETECTION & ISOLATION SYSTEM IED	E31-1010

U41-1010

Figure 9.4-3 – Secondary Containment Hvac System P&ID (Sheet 1 of 3)

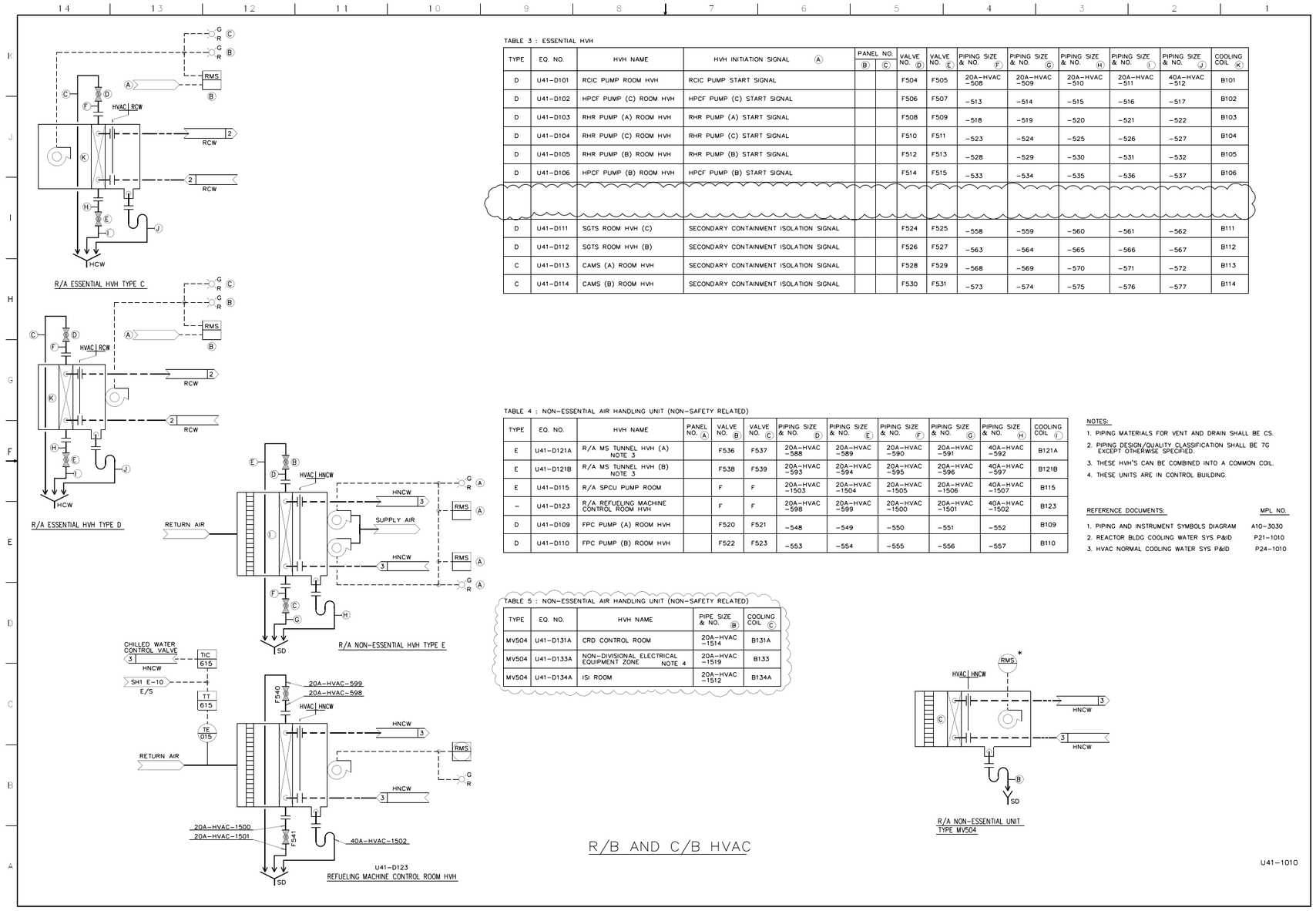

TABLE 3 : ESSENTIAL HVH

TYPE	EQ. NO.	HVH NAME	HVH INITIATION SIGNAL (A)	PANEL NO. (B)	PANEL NO. (C)	VALVE NO. (D)	VALVE NO. (E)	PIPING SIZE & NO. (F)	PIPING SIZE & NO. (G)	PIPING SIZE & NO. (H)	PIPING SIZE & NO. (I)	PIPING SIZE & NO. (J)	COOLING COIL (K)
D	U41-D101	RCIC PUMP ROOM HVH	RCIC PUMP START SIGNAL			F504	F505	20A-HVAC -508	20A-HVAC -509	20A-HVAC -510	20A-HVAC -511	40A-HVAC -512	B101
D	U41-D102	HPCF PUMP (C) ROOM HVH	HPCF PUMP (C) START SIGNAL			F506	F507	-513	-514	-515	-516	-517	B102
D	U41-D103	RHR PUMP (A) ROOM HVH	RHR PUMP (A) START SIGNAL			F508	F509	-518	-519	-520	-521	-522	B103
D	U41-D104	RHR PUMP (C) ROOM HVH	RHR PUMP (C) START SIGNAL			F510	F511	-523	-524	-525	-526	-527	B104
D	U41-D105	RHR PUMP (B) ROOM HVH	RHR PUMP (B) START SIGNAL			F512	F513	-528	-529	-530	-531	-532	B105
D	U41-D106	HPCF PUMP (B) ROOM HVH	HPCF PUMP (B) START SIGNAL			F514	F515	-533	-534	-535	-536	-537	B106
D	U41-D111	SGTS ROOM HVH (C)	SECONDARY CONTAINMENT ISOLATION SIGNAL			F524	F525	-558	-559	-560	-561	-562	B111
D	U41-D112	SGTS ROOM HVH (B)	SECONDARY CONTAINMENT ISOLATION SIGNAL			F526	F527	-563	-564	-565	-566	-567	B112
C	U41-D113	CAMS (A) ROOM HVH	SECONDARY CONTAINMENT ISOLATION SIGNAL			F528	F529	-568	-569	-570	-571	-572	B113
C	U41-D114	CAMS (B) ROOM HVH	SECONDARY CONTAINMENT ISOLATION SIGNAL			F530	F531	-573	-574	-575	-576	-577	B114

TABLE 4 : NON-ESSENTIAL AIR HANDLING UNIT (NON-SAFETY RELATED)

TYPE	EQ. NO.	HVH NAME	PANEL NO. (A)	VALVE NO. (B)	VALVE NO. (C)	PIPING SIZE & NO. (D)	PIPING SIZE & NO. (E)	PIPING SIZE & NO. (F)	PIPING SIZE & NO. (G)	PIPING SIZE & NO. (H)	COOLING COIL (I)
E	U41-D121A	R/A MS TUNNEL HVH (A) NOTE 3		F536	F537	20A-HVAC -588	20A-HVAC -589	20A-HVAC -590	20A-HVAC -591	40A-HVAC -592	B121A
E	U41-D121B	R/A MS TUNNEL HVH (B) NOTE 3		F538	F539	20A-HVAC -593	20A-HVAC -594	20A-HVAC -595	20A-HVAC -596	40A-HVAC -597	B121B
E	U41-D115	R/A SPCU PUMP ROOM		F	F	20A-HVAC -1503	20A-HVAC -1504	20A-HVAC -1505	20A-HVAC -1506	40A-HVAC -1507	B115
–	U41-D123	R/A REFUELING MACHINE CONTROL ROOM HVH		F	F	20A-HVAC -598	20A-HVAC -599	20A-HVAC -1500	20A-HVAC -1501	40A-HVAC -1502	B123
D	U41-D109	FPC PUMP (A) ROOM HVH		F520	F521	-548	-549	-550	-551	-552	B109
D	U41-D110	FPC PUMP (B) ROOM HVH		F522	F523	-553	-554	-555	-556	-557	B110

NOTES:

1. PIPING MATERIALS FOR VENT AND DRAIN SHALL BE CS.
2. PIPING DESIGN/QUALITY CLASSIFICATION SHALL BE 7G EXCEPT OTHERWISE SPECIFIED.
3. THESE HVH'S CAN BE COMBINED INTO A COMMON COIL.
4. THESE UNITS ARE IN CONTROL BUILDING.

REFERENCE DOCUMENTS:

	MPL NO.
1. PIPING AND INSTRUMENT SYMBOLS DIAGRAM	A10-3030
2. REACTOR BLDG COOLING WATER SYS P&ID	P21-1010
3. HVAC NORMAL COOLING WATER SYS P&ID	P24-1010

TABLE 5 : NON-ESSENTIAL AIR HANDLING UNIT (NON-SAFETY RELATED)

TYPE	EQ. NO.	HVH NAME	PIPE SIZE & NO. (B)	COOLING COIL (C)
MV504	U41-D131A	CRD CONTROL ROOM	20A-HVAC -1514	B131A
MV504	U41-D133A	NON-DIVISIONAL ELECTRICAL EQUIPMENT ZONE NOTE 4	20A-HVAC -1519	B133
MV504	U41-D134A	ISI ROOM	20A-HVAC -1512	B134A

Figure 9.4-3 – Secondary Containment Hvac System P&ID (Sheet 2 of 3)

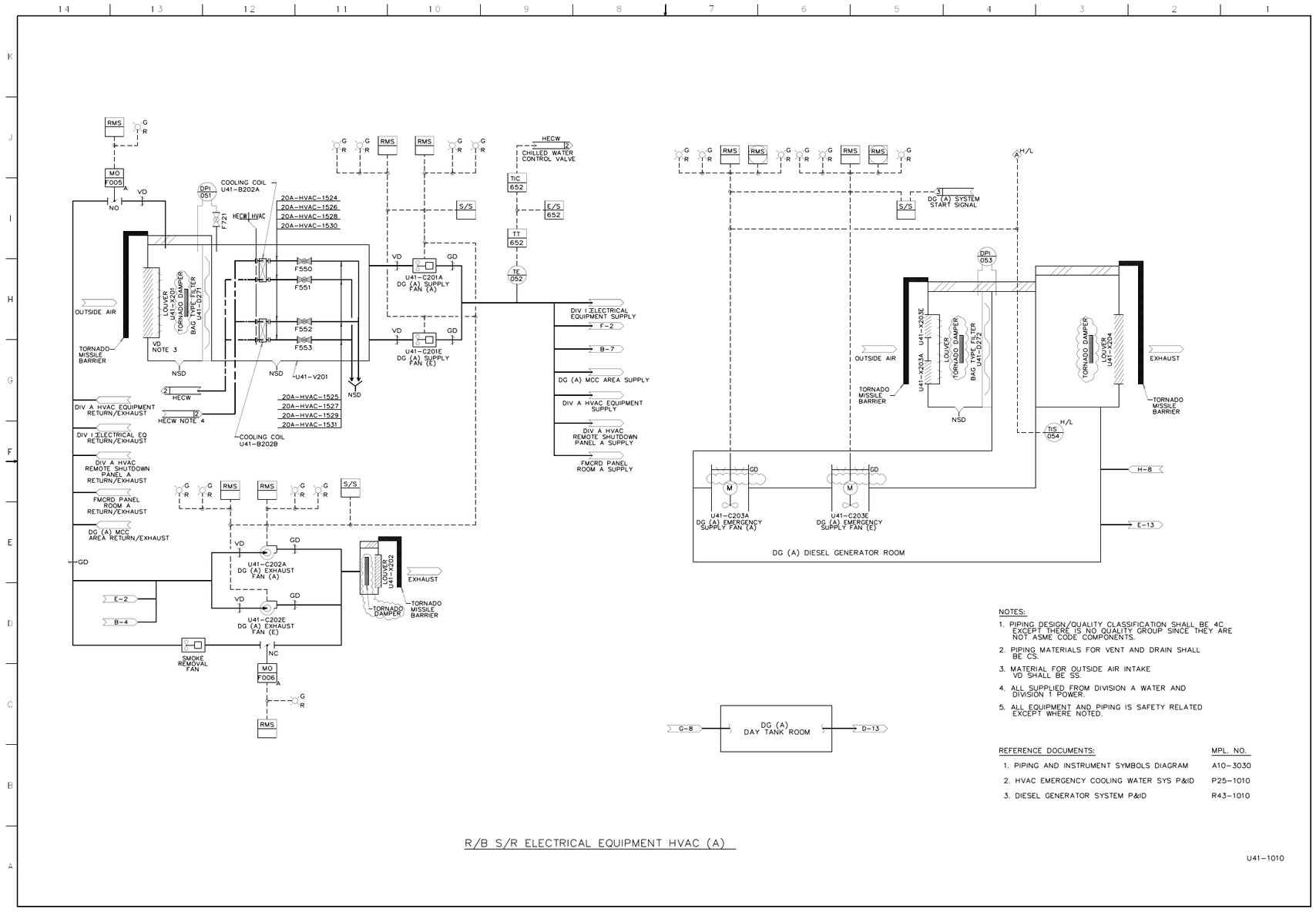

NOTES:

1. PIPING DESIGN/QUALITY CLASSIFICATION SHALL BE 4C EXCEPT THERE IS NO QUALITY GROUP SINCE THEY ARE NOT ASME CODE COMPONENTS.
2. PIPING MATERIALS FOR VENT AND DRAIN SHALL BE CS.
3. MATERIAL FOR OUTSIDE AIR INTAKE VD SHALL BE SS.
4. ALL SUPPLIED FROM DIVISION A WATER AND DIVISION 1 POWER.
5. ALL EQUIPMENT AND PIPING IS SAFETY RELATED EXCEPT WHERE NOTED.

REFERENCE DOCUMENTS:	MPL. NO.
1. PIPING AND INSTRUMENT SYMBOLS DIAGRAM	A10-3030
2. HVAC EMERGENCY COOLING WATER SYS P&ID	P25-1010
3. DIESEL GENERATOR SYSTEM P&ID	R43-1010

Figure 9.4-4 – R/B Safety-related Electrical Equipment Hvac System (Sheet 1 of 3)

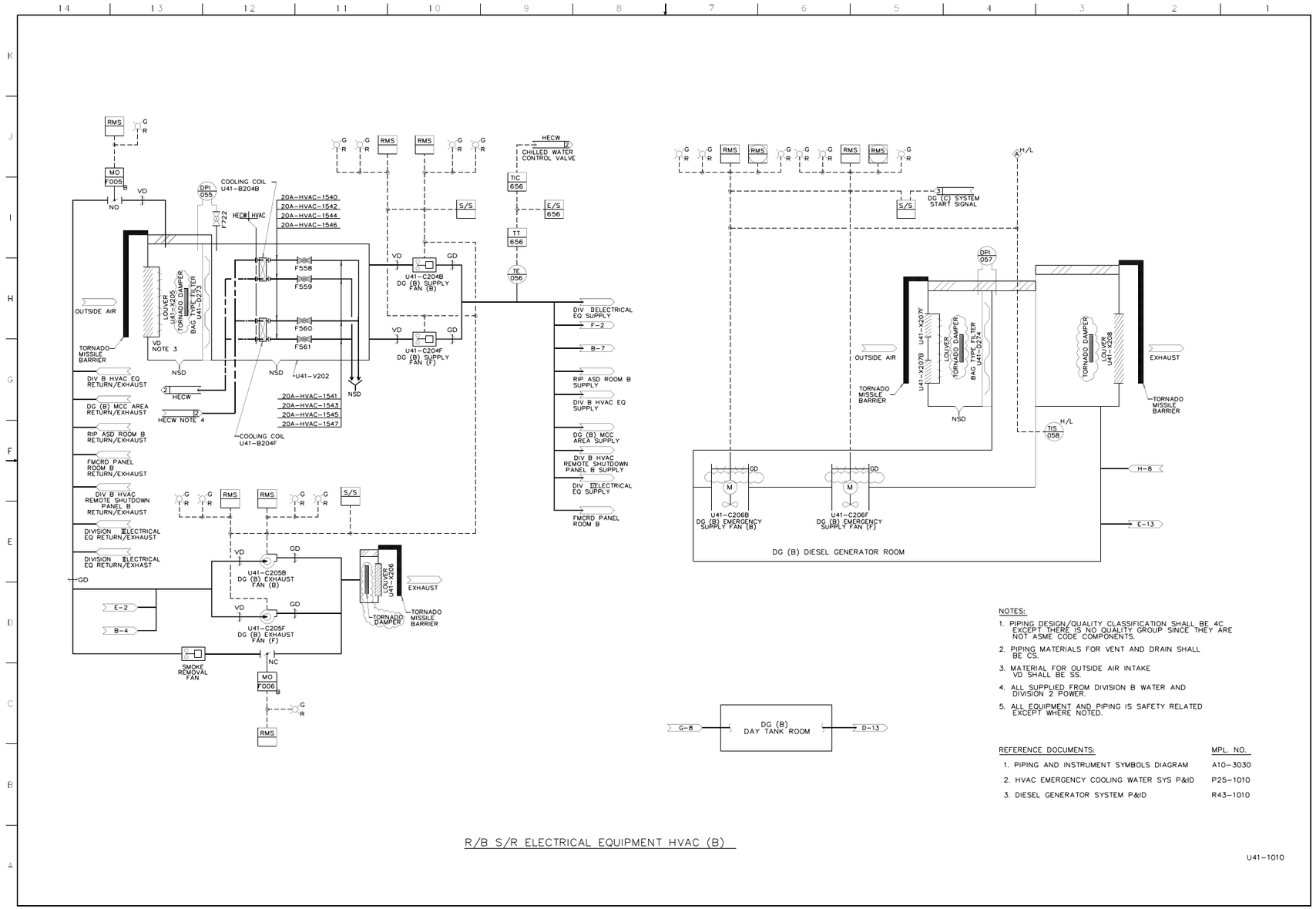

Figure 9.4-4 – R/B Safety-related Electrical Equipment Hvac System (Sheet 2 of 3)

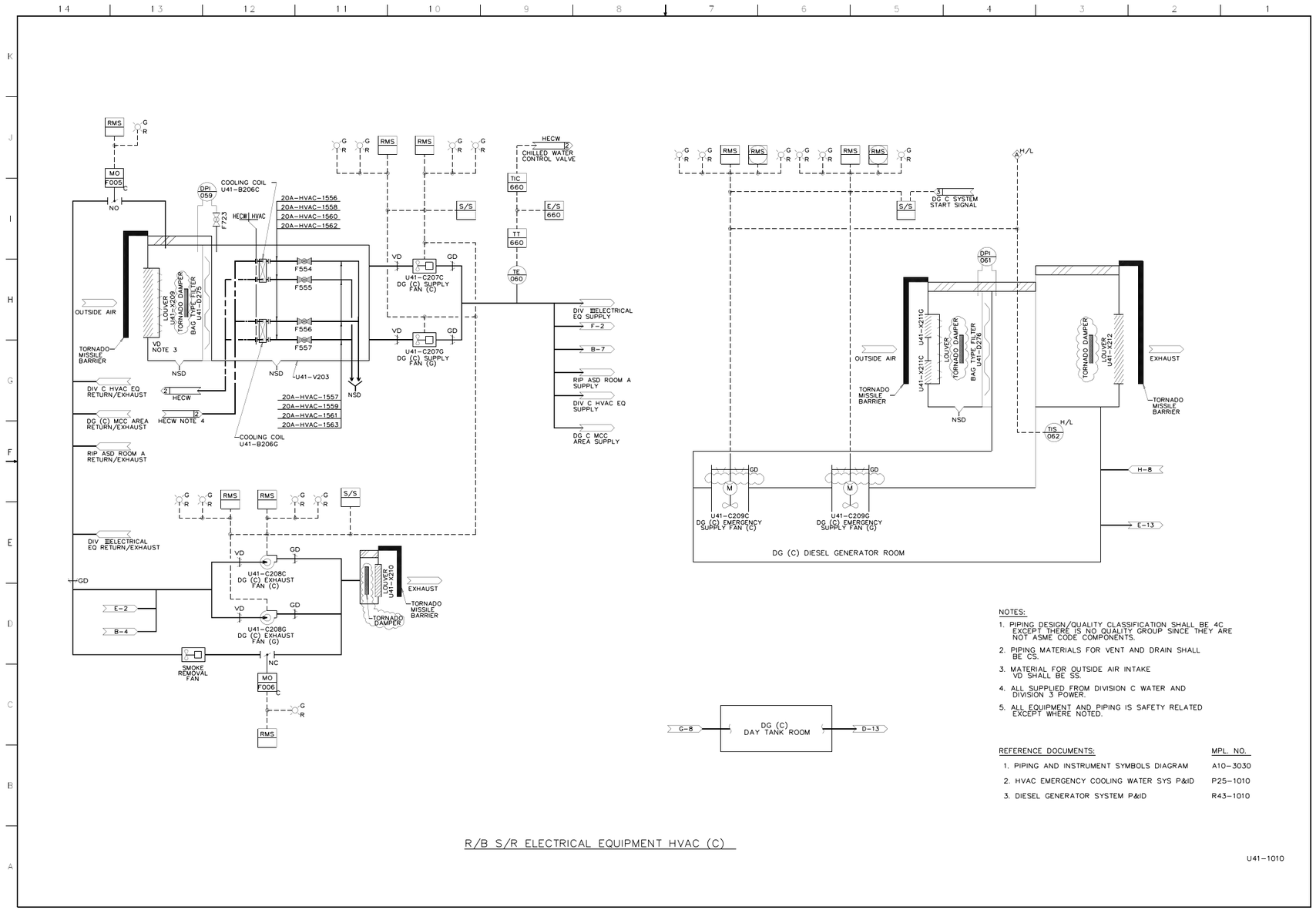

NOTES:

1. PIPING DESIGN/QUALITY CLASSIFICATION SHALL BE 4C EXCEPT THERE IS NO QUALITY GROUP SINCE THEY ARE NOT ASME CODE COMPONENTS.
2. PIPING MATERIALS FOR VENT AND DRAIN SHALL BE CS.
3. MATERIAL FOR OUTSIDE AIR INTAKE VD SHALL BE SS.
4. ALL SUPPLIED FROM DIVISION C WATER AND DIVISION 3 POWER.
5. ALL EQUIPMENT AND PIPING IS SAFETY RELATED EXCEPT WHERE NOTED.

REFERENCE DOCUMENTS:	MPL. NO.
1. PIPING AND INSTRUMENT SYMBOLS DIAGRAM	A10-3030
2. HVAC EMERGENCY COOLING WATER SYS P&ID	P25-1010
3. DIESEL GENERATOR SYSTEM P&ID	R43-1010

Figure 9.4-4 – R/B Safety-related Electrical Equipment Hvac System (Sheet 3 of 3)

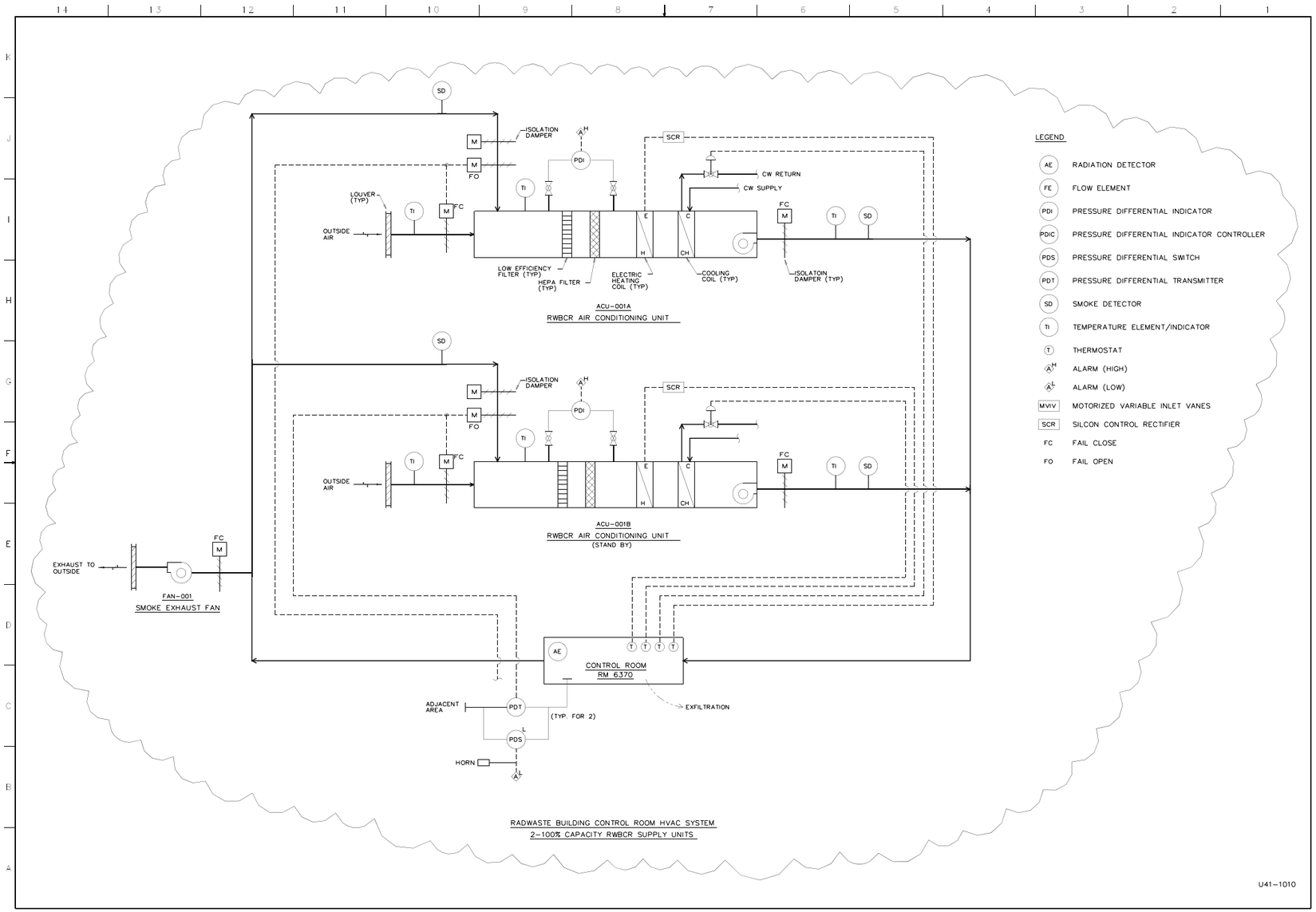

Figure 9.4-10 – Radwaste Building HVAC P&ID (Sheet 1 of 3)

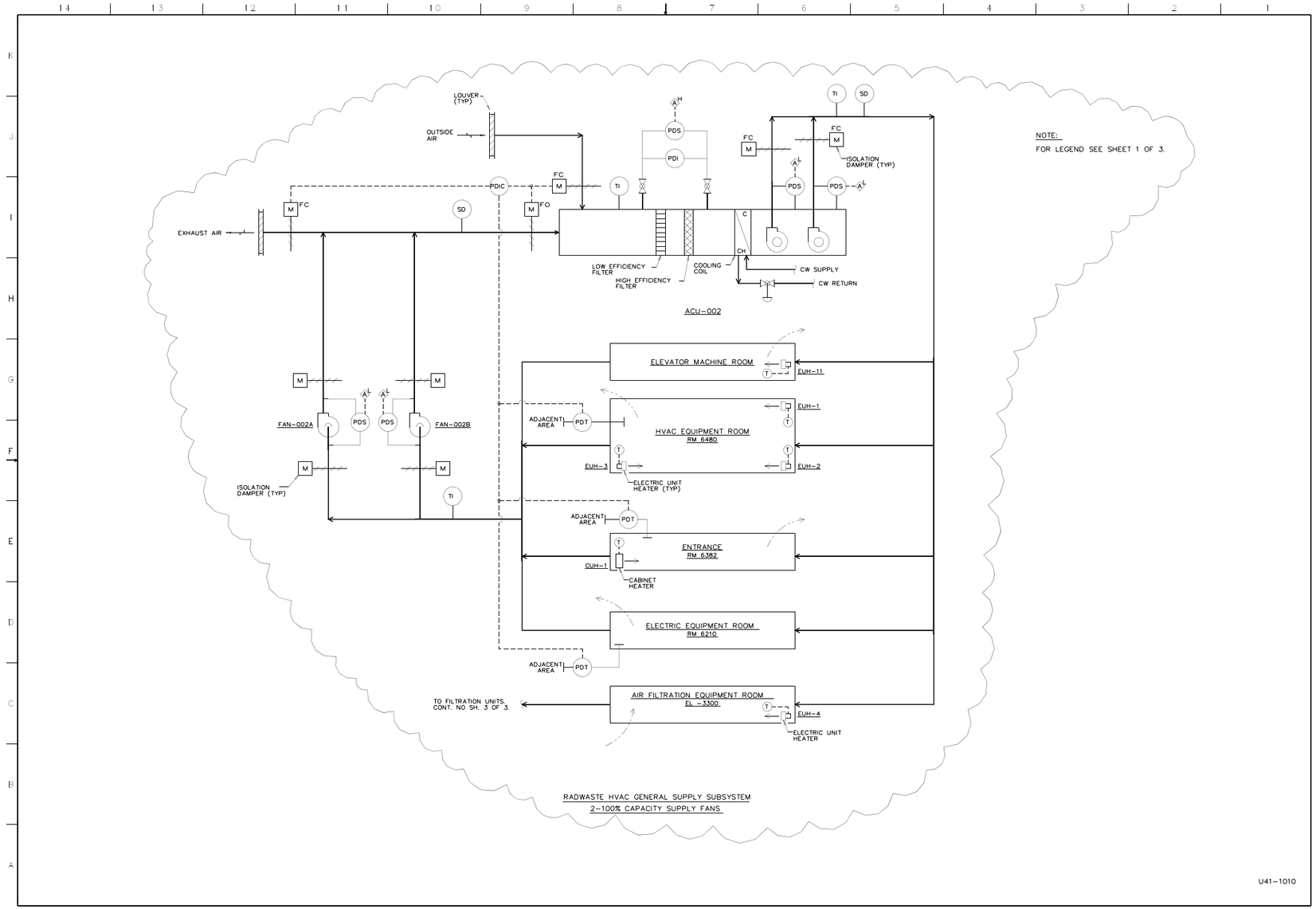

Figure 9.4-10 – Radwaste Building HVAC P&ID (Sheet 2 of 3)

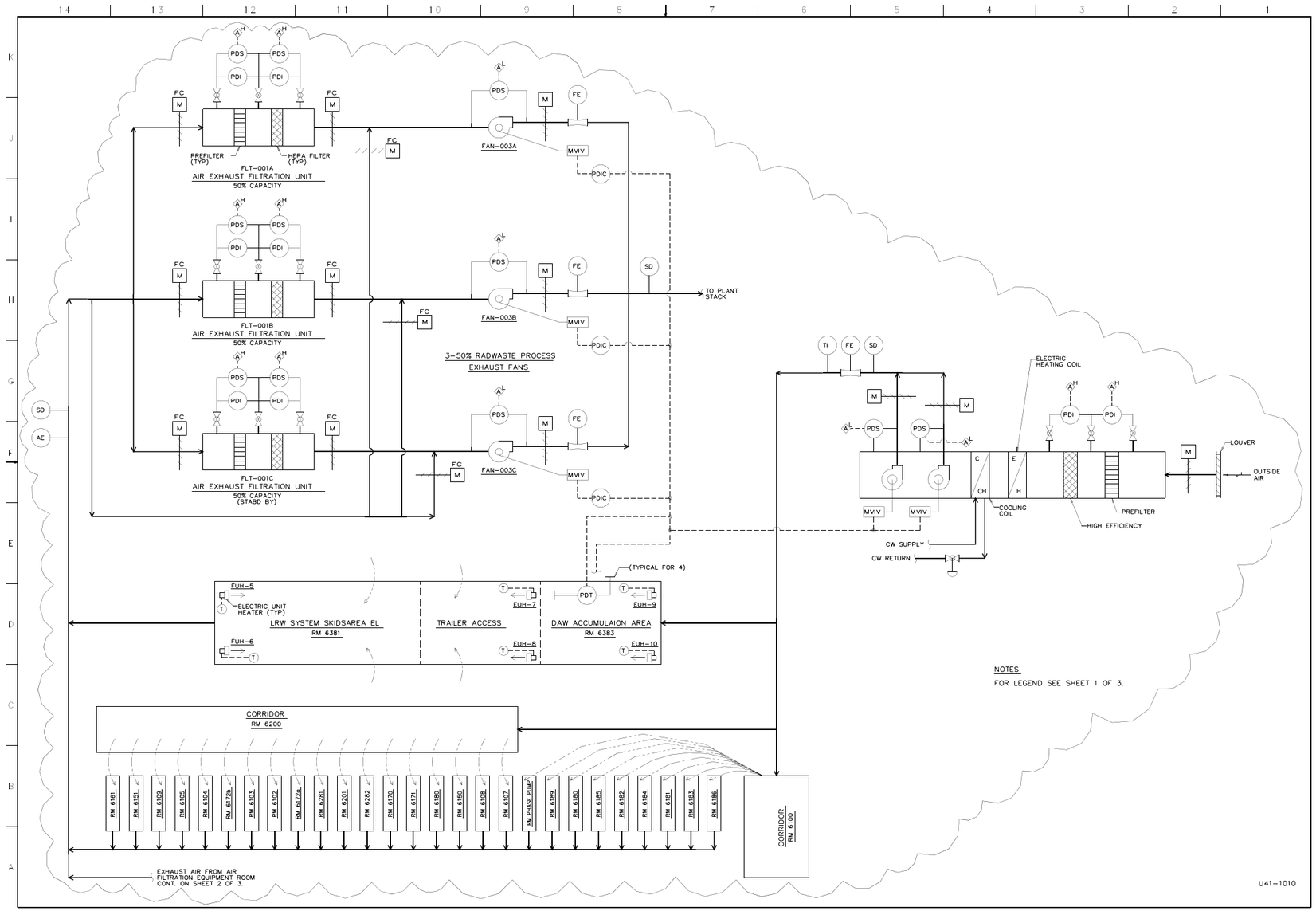

Figure 9.4-10 – Radwaste Building HVAC P&ID (Sheet 3 of 3)

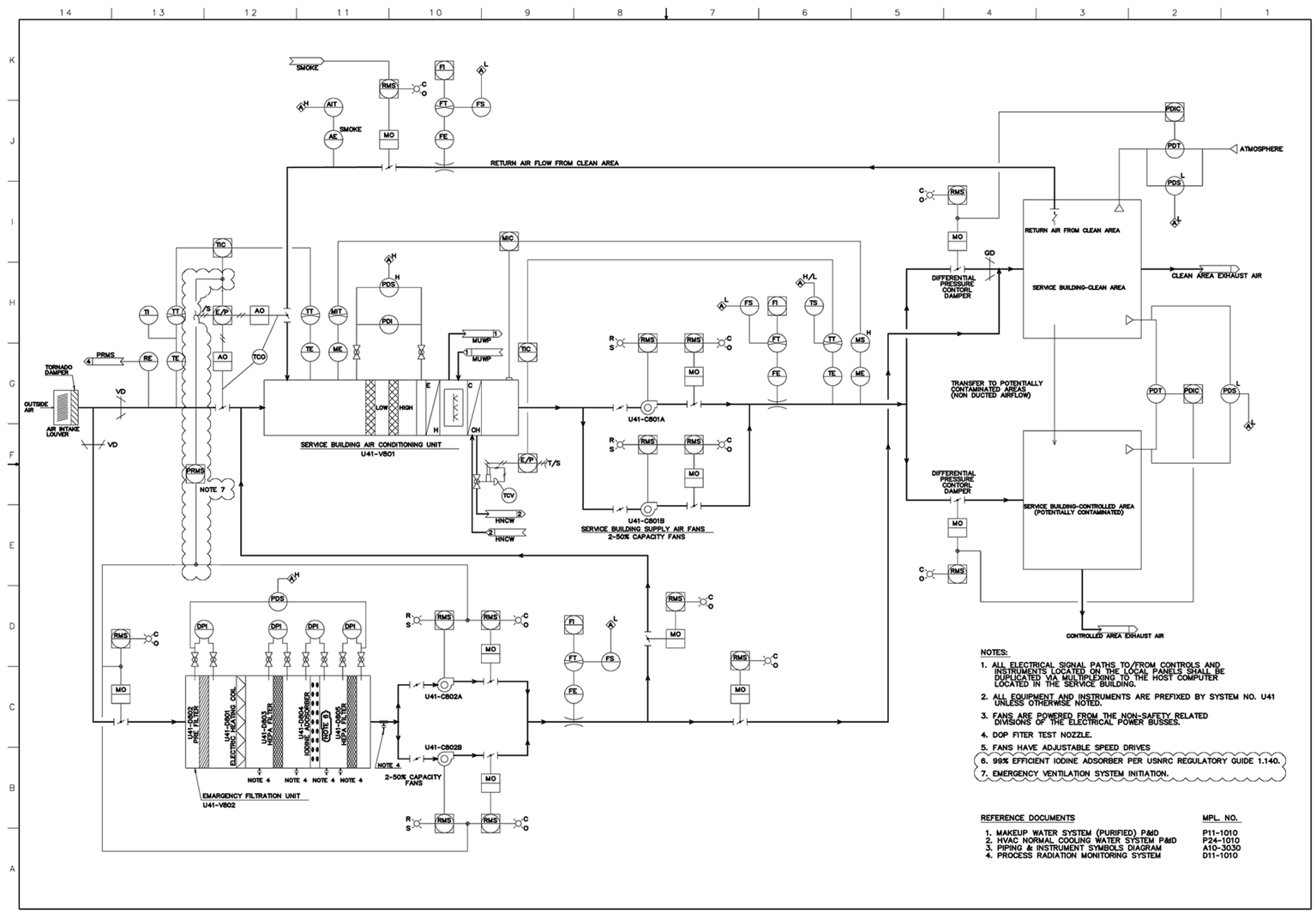

Figure 9.4-11 – Service Building HVAC P&ID (SHEET 1 OF 2)

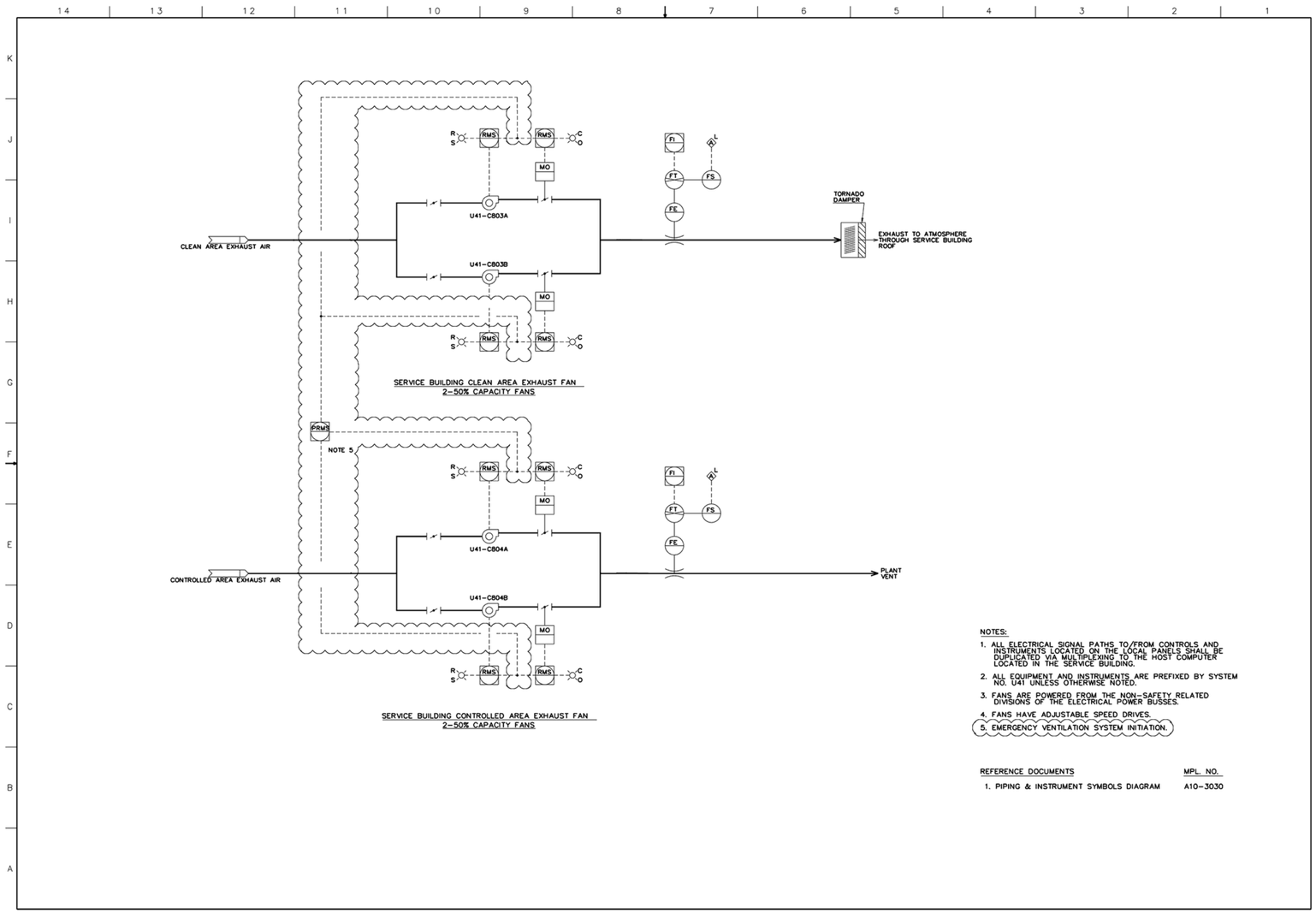

Figure 9.4-11 – Service Building HVAC P&ID (Sheet 2 OF 2)

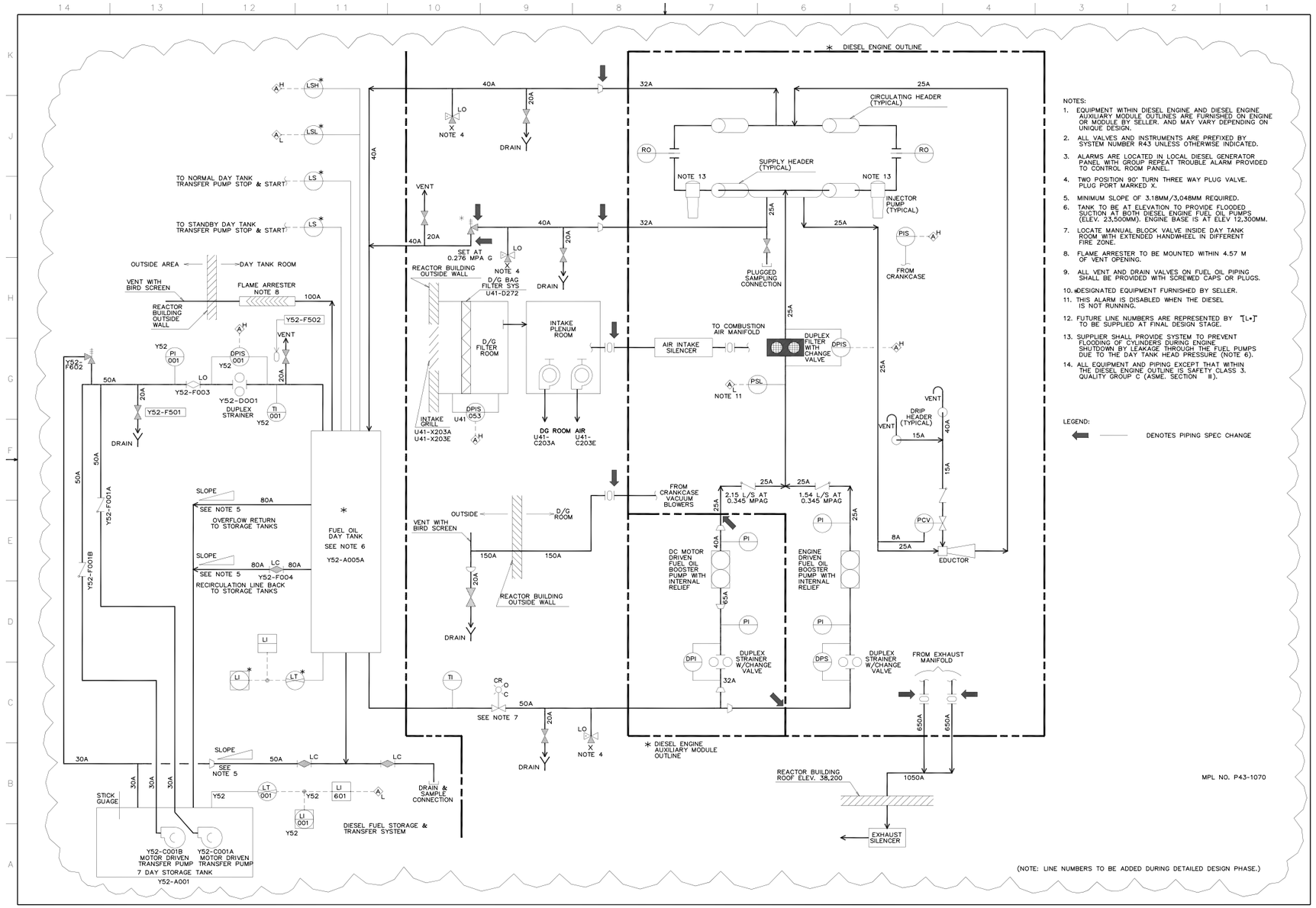

Figure 9.5-6 – Standby Diesel Generator Fuel Oil And Intake And Exhaust Systems