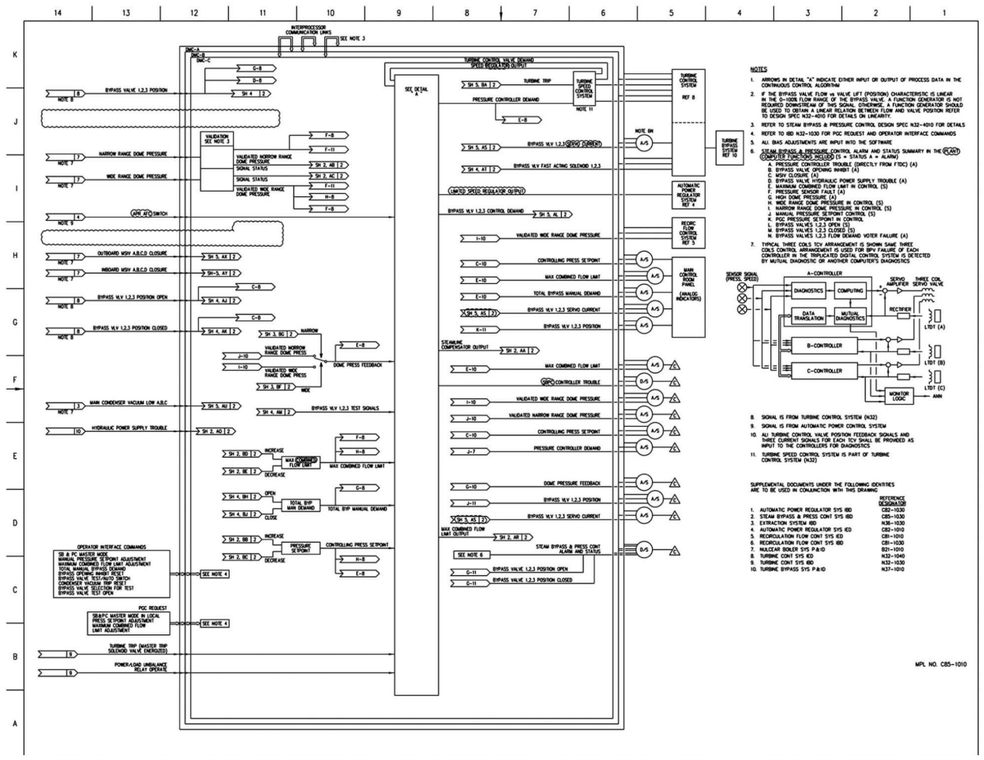


**Figure 7.7-12 – Steam Bypass and Pressure Control System IED (Sheet 1 of 2)**

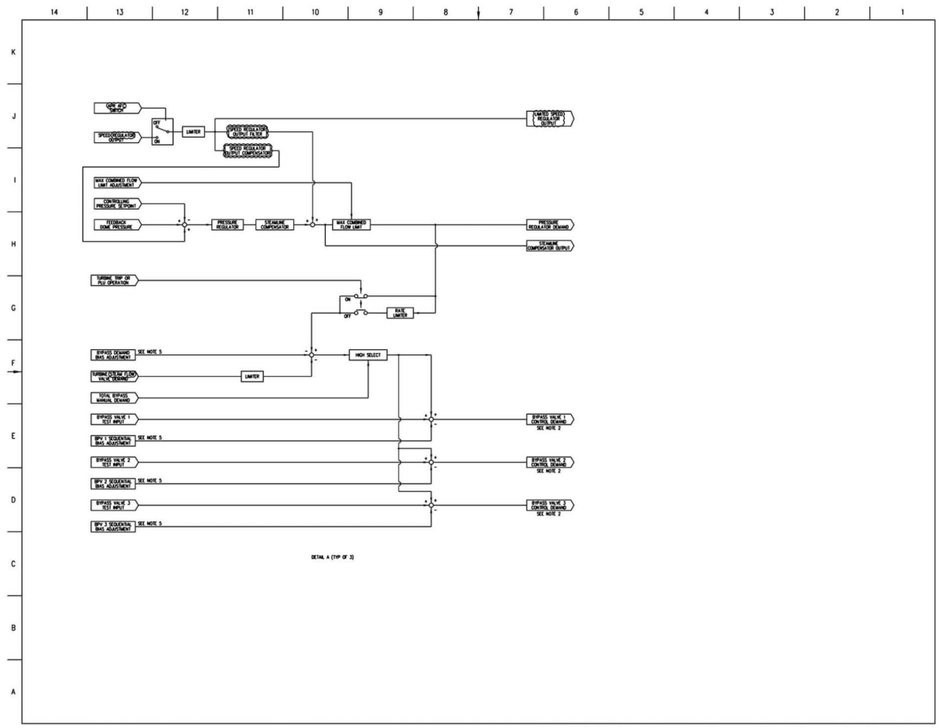


**Figure 7.7-12 – Steam Bypass and Pressure Control System IED (Sheet 2 of 2)**

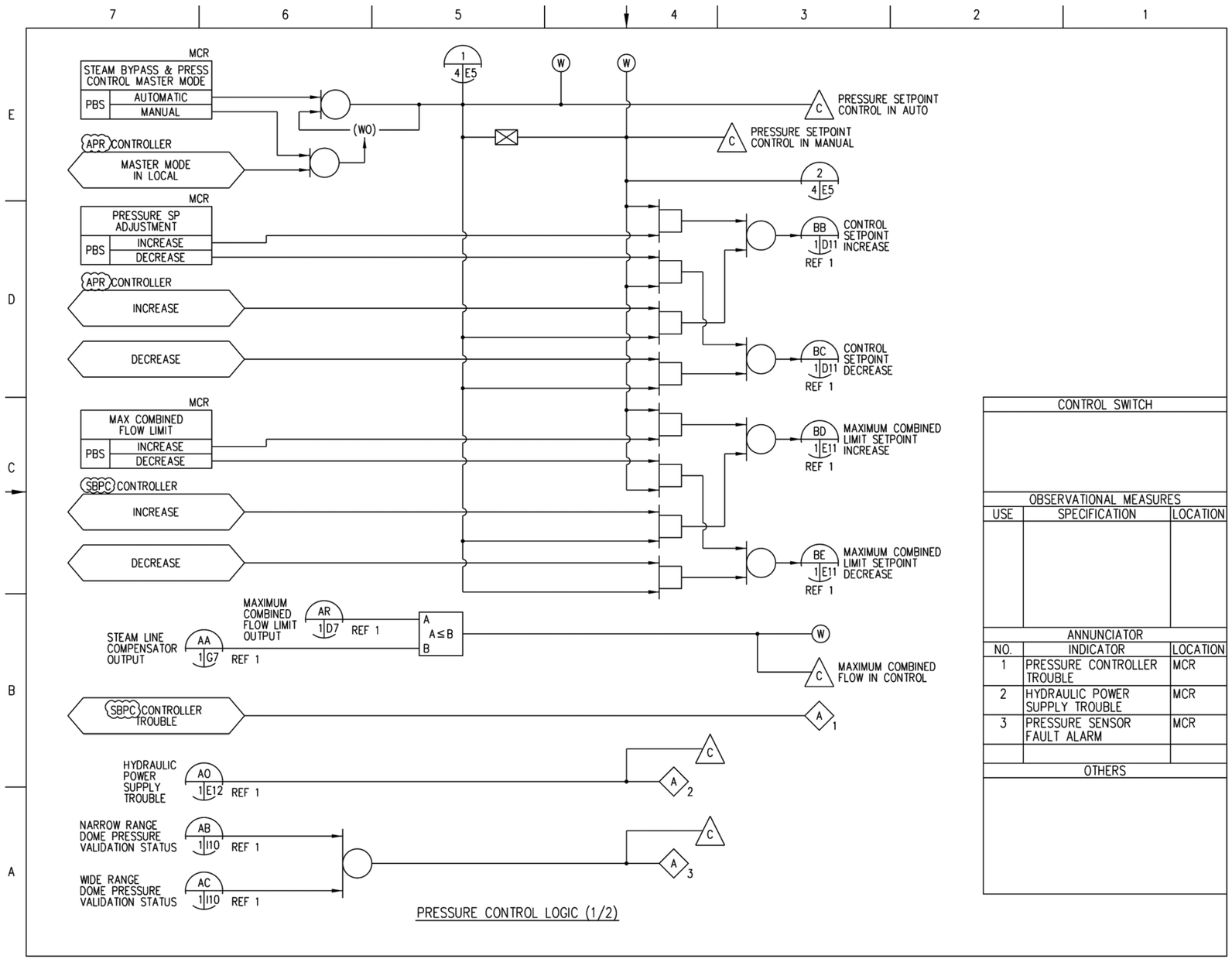


**Figure 7.7-13 – Steam Bypass and Pressure Control System IBD (Sheet 2 of 5)**

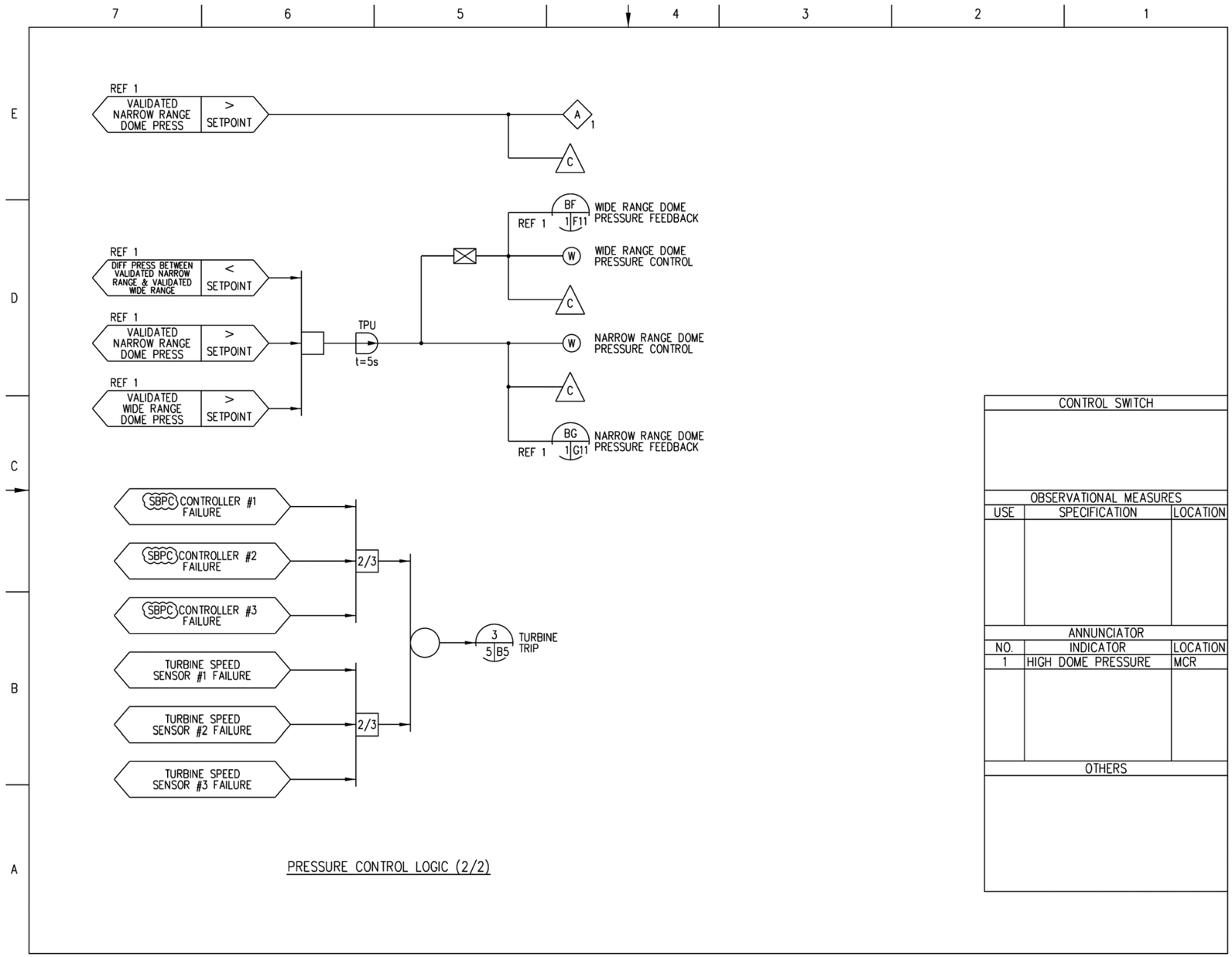


**Figure 7.7-13 – Steam Bypass and Pressure Control System IBD (Sheet 3 of 5)**

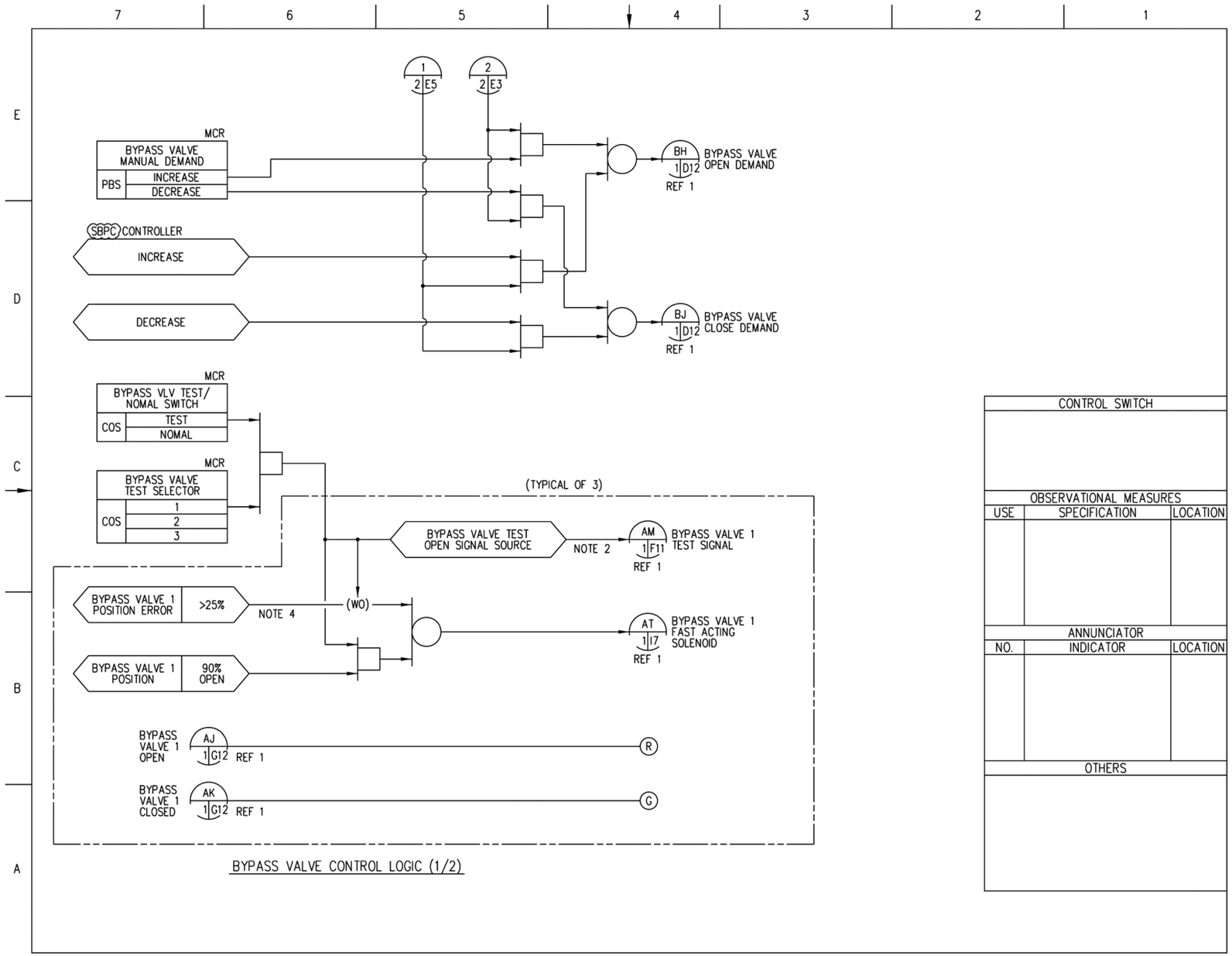


**Figure 7.7-13 – Steam Bypass and Pressure Control System IBD (Sheet 4 of 5)**

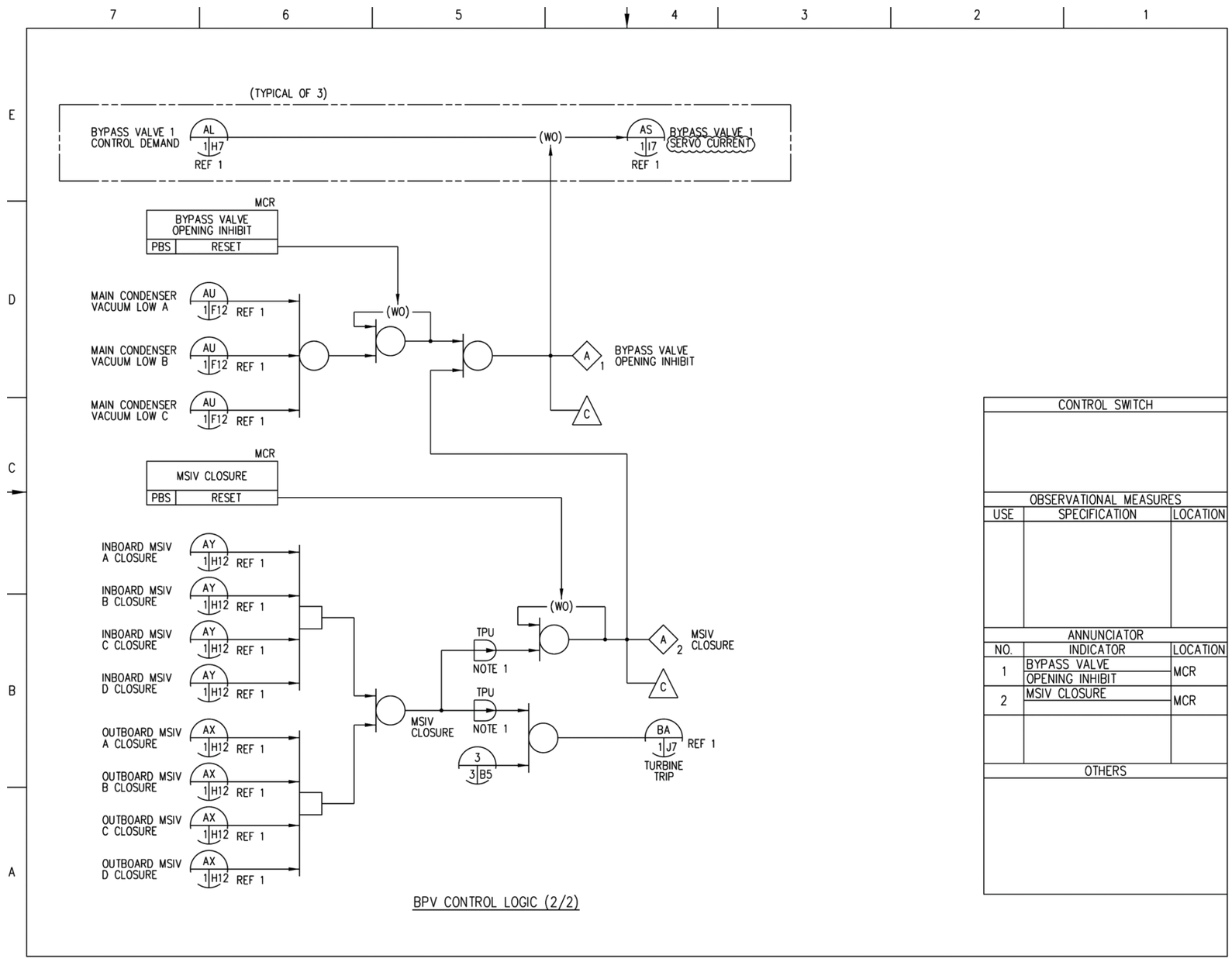


**Figure 7.7-13 – Steam Bypass and Pressure Control System IBD (Sheet 5 of 5)**

PROPRIETARY INFORMATION

Figure 8.2-1 – Power Distribution Routing Diagram (Sheet 1 of 7)

PROPRIETARY INFORMATION

Figure 8.2-1 – Power Distribution Routing Diagram (Sheet 2 of 7)

PROPRIETARY INFORMATION

Figure 8.2-1 – Power Distribution Routing Diagram (Sheet 3 of 7)

PROPRIETARY INFORMATION

Figure 8.2-1 – Power Distribution Routing Diagram (Sheet 4 of 7)

PROPRIETARY INFORMATION

Figure 8.2-1 – Power Distribution Routing Diagram (Sheet 5 of 7)

[redacted]

PROPRIETARY INFORMATION

Figure 8.2-1 – Power Distribution Routing Diagram (Sheet 6 of 7)

[redacted]

PROPRIETARY INFORMATION

Figure 8.2-1 – Power Distribution Routing Diagram (Sheet 7 of 7)

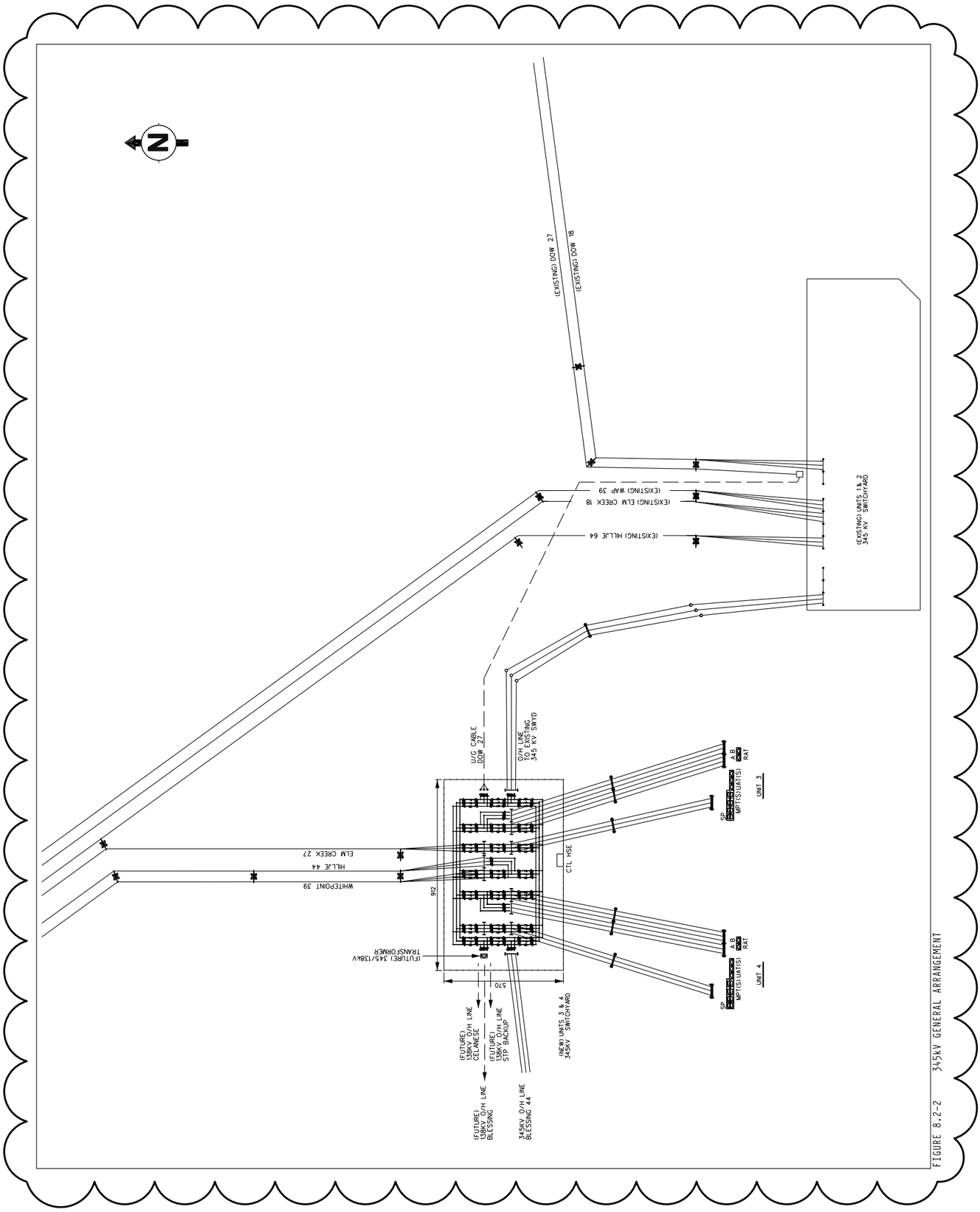


Figure 8.2-2 – 345 kV General Arrangement

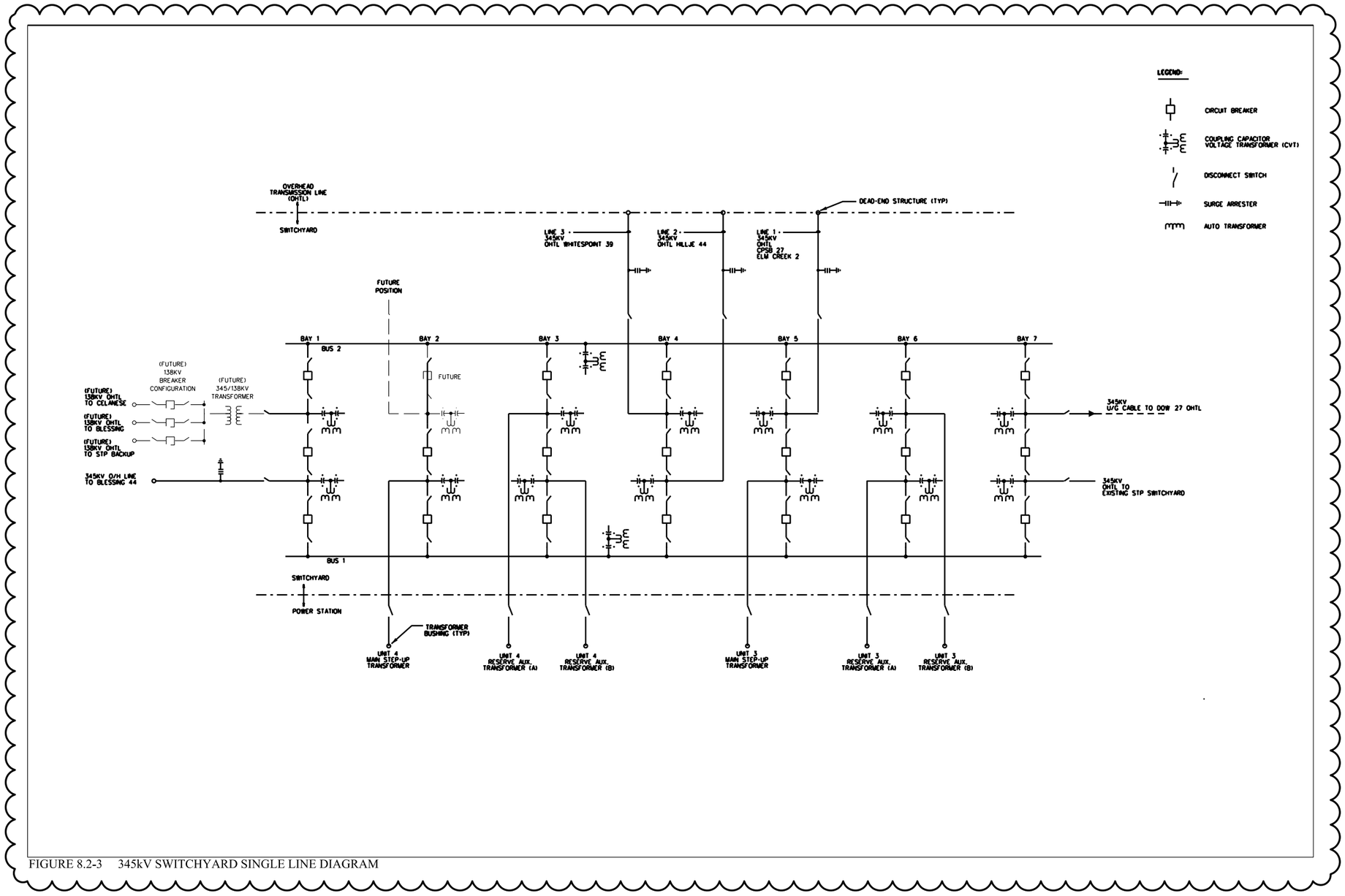


FIGURE 8.2-3 345kV SWITCHYARD SINGLE LINE DIAGRAM

**Figure 8.2-3 – 345 kV Switchyard Single Line Diagram**

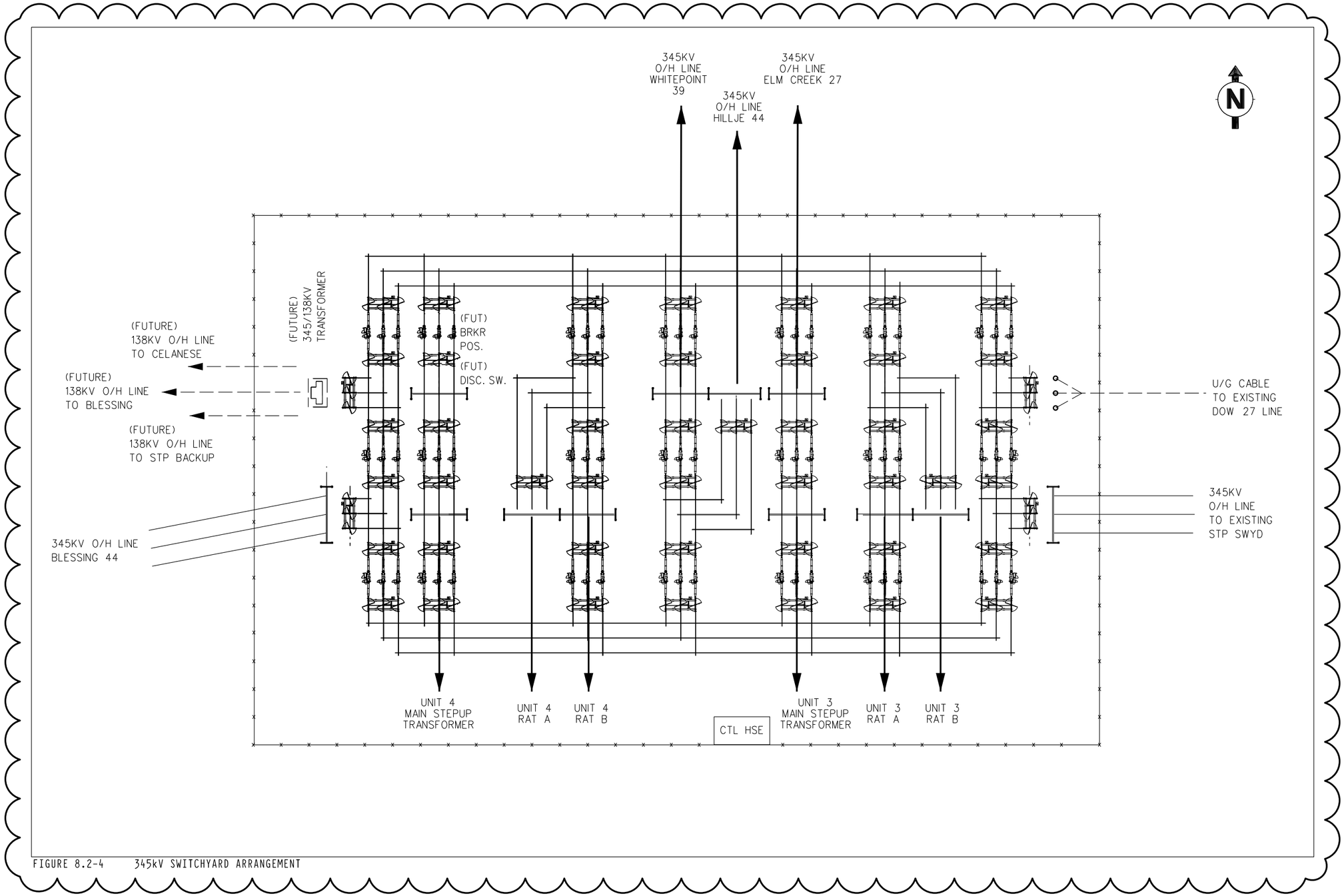


**Figure 8.2-4 – 345 kV Switchyard Arrangement**

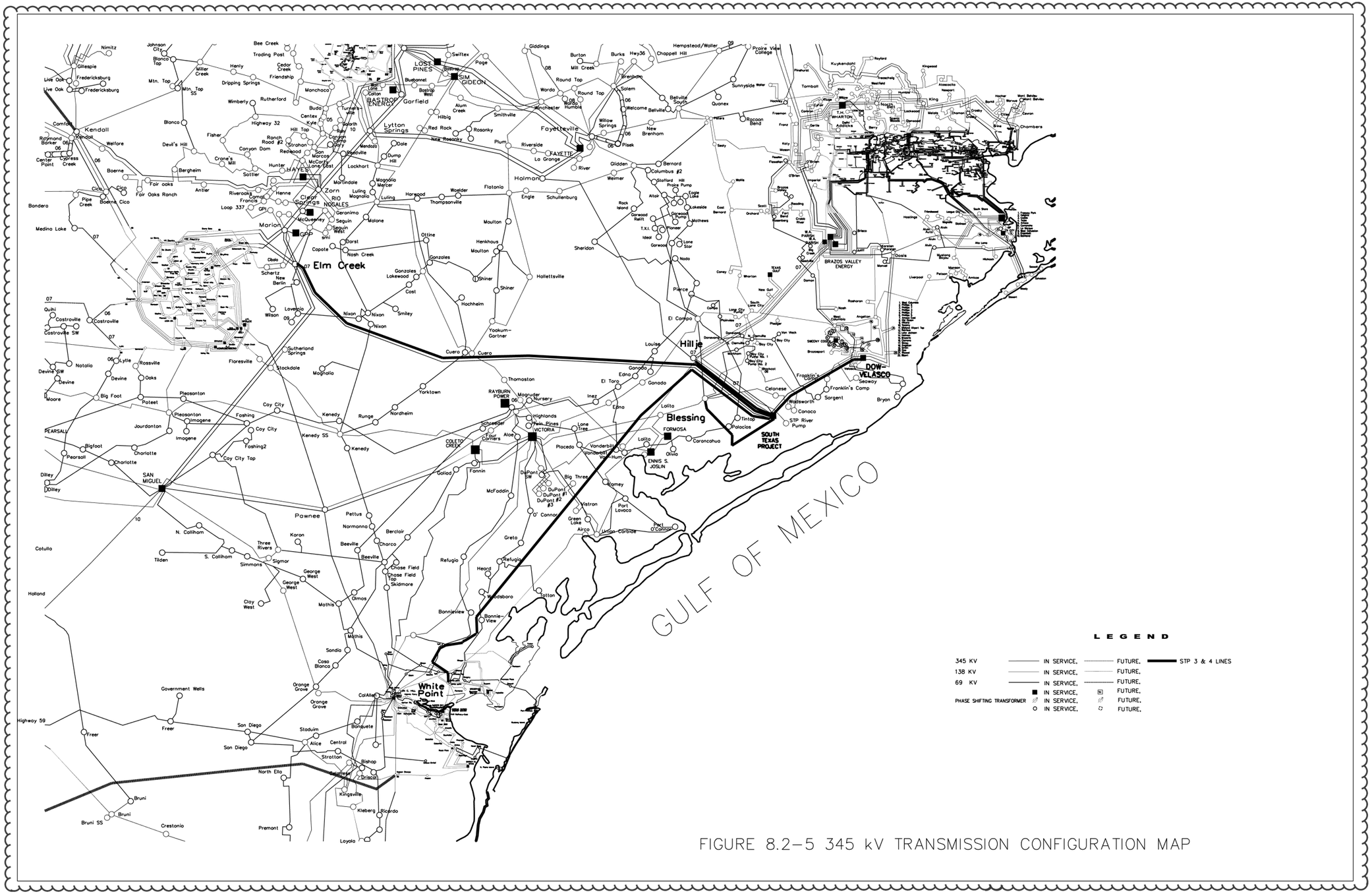


FIGURE 8.2-5 345 kV TRANSMISSION CONFIGURATION MAP

**Figure 8.2-5 – 345 kV Transmission Configuration Map**

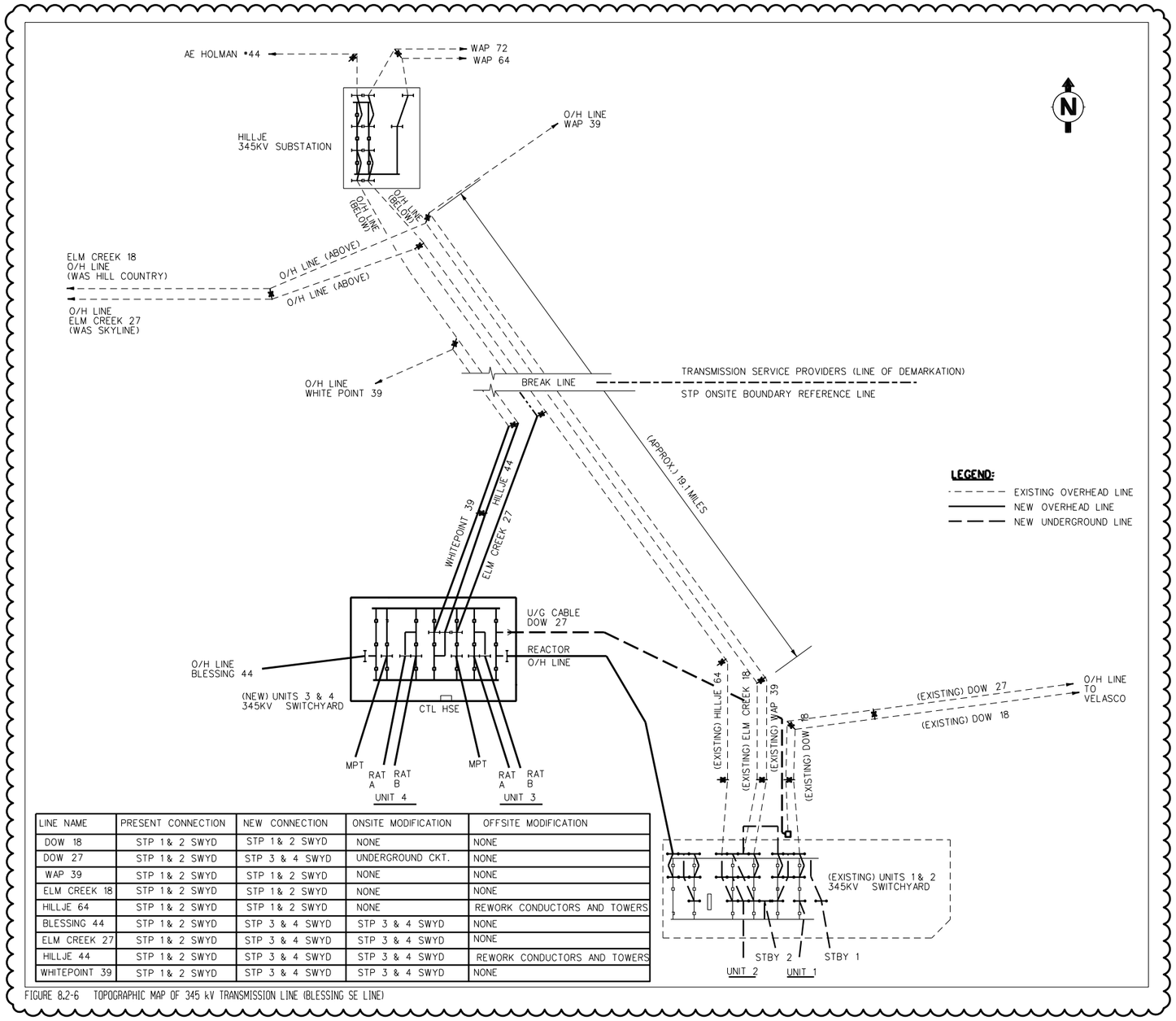


| LINE NAME | PRESENT CONNECTION | NEW CONNECTION | ONSITE MODIFICATION | OFFSITE MODIFICATION |
|---|---|---|---|---|
| DOW 18 | STP 1& 2 SWYD | STP 1& 2 SWYD | NONE | NONE |
| DOW 27 | STP 1& 2 SWYD | STP 3 & 4 SWYD | UNDERGROUND CKT. | NONE |
| WAP 39 | STP 1& 2 SWYD | STP 1& 2 SWYD | NONE | NONE |
| ELM CREEK 18 | STP 1& 2 SWYD | STP 1& 2 SWYD | NONE | NONE |
| HILLJE 64 | STP 1& 2 SWYD | STP 1& 2 SWYD | NONE | REWORK CONDUCTORS AND TOWERS |
| BLESSING 44 | STP 1& 2 SWYD | STP 3 & 4 SWYD | STP 3 & 4 SWYD | NONE |
| ELM CREEK 27 | STP 1& 2 SWYD | STP 3 & 4 SWYD | STP 3 & 4 SWYD | NONE |
| HILLJE 44 | STP 1& 2 SWYD | STP 3 & 4 SWYD | STP 3 & 4 SWYD | REWORK CONDUCTORS AND TOWERS |
| WHITEPOINT 39 | STP 1& 2 SWYD | STP 3 & 4 SWYD | STP 3 & 4 SWYD | NONE |

FIGURE 8.2-6 TOPOGRAPHIC MAP OF 345 kV TRANSMISSION LINE (BLESSING SE LINE)

**Figure 8.2-6 – Topographic Map of 345 kV Transmission Line (Blessing SE Line)**

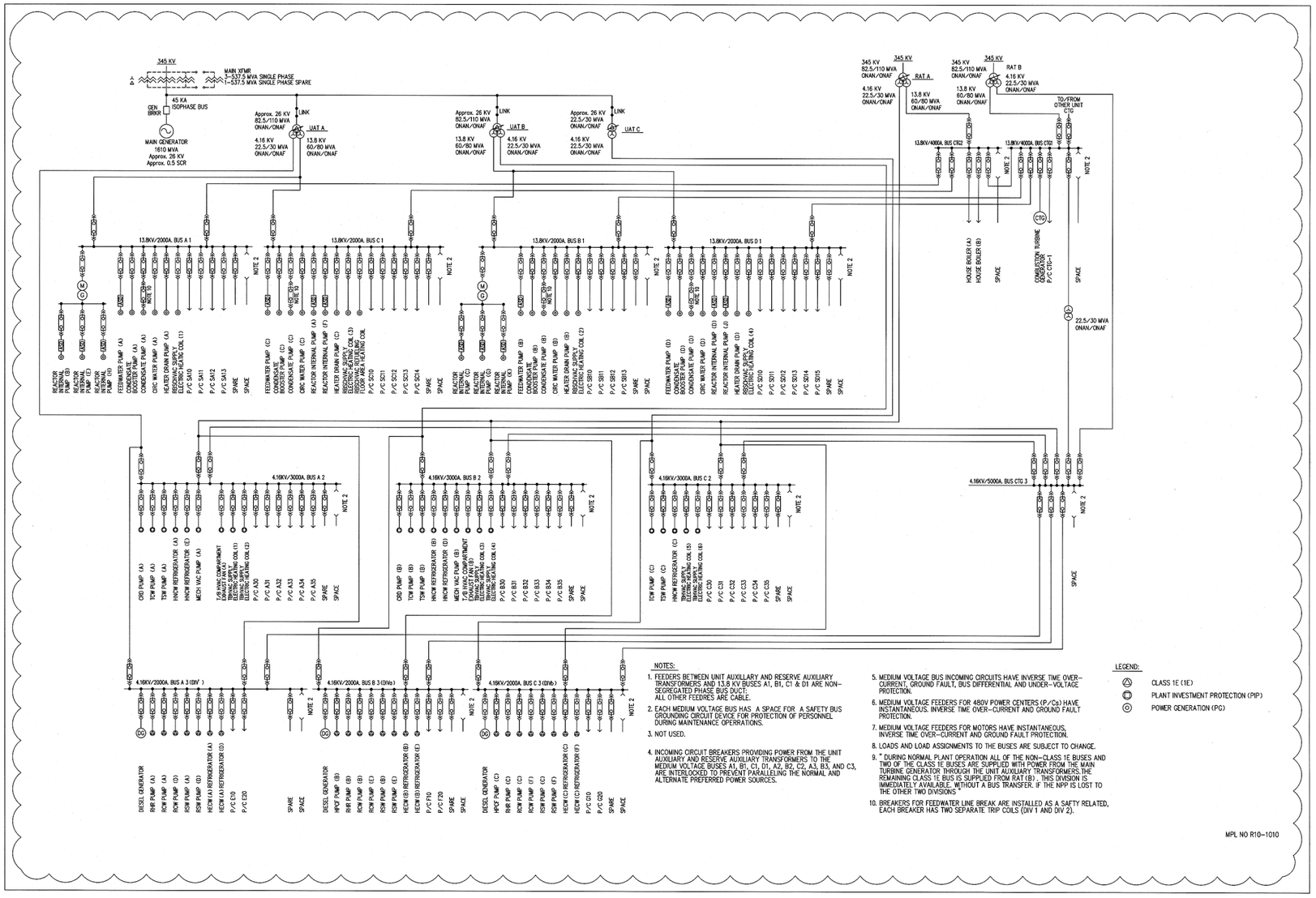


**Figure 8.3-1 – Electrical Power Distribution System Single Line Diagram (Sheet 1 of 4)**

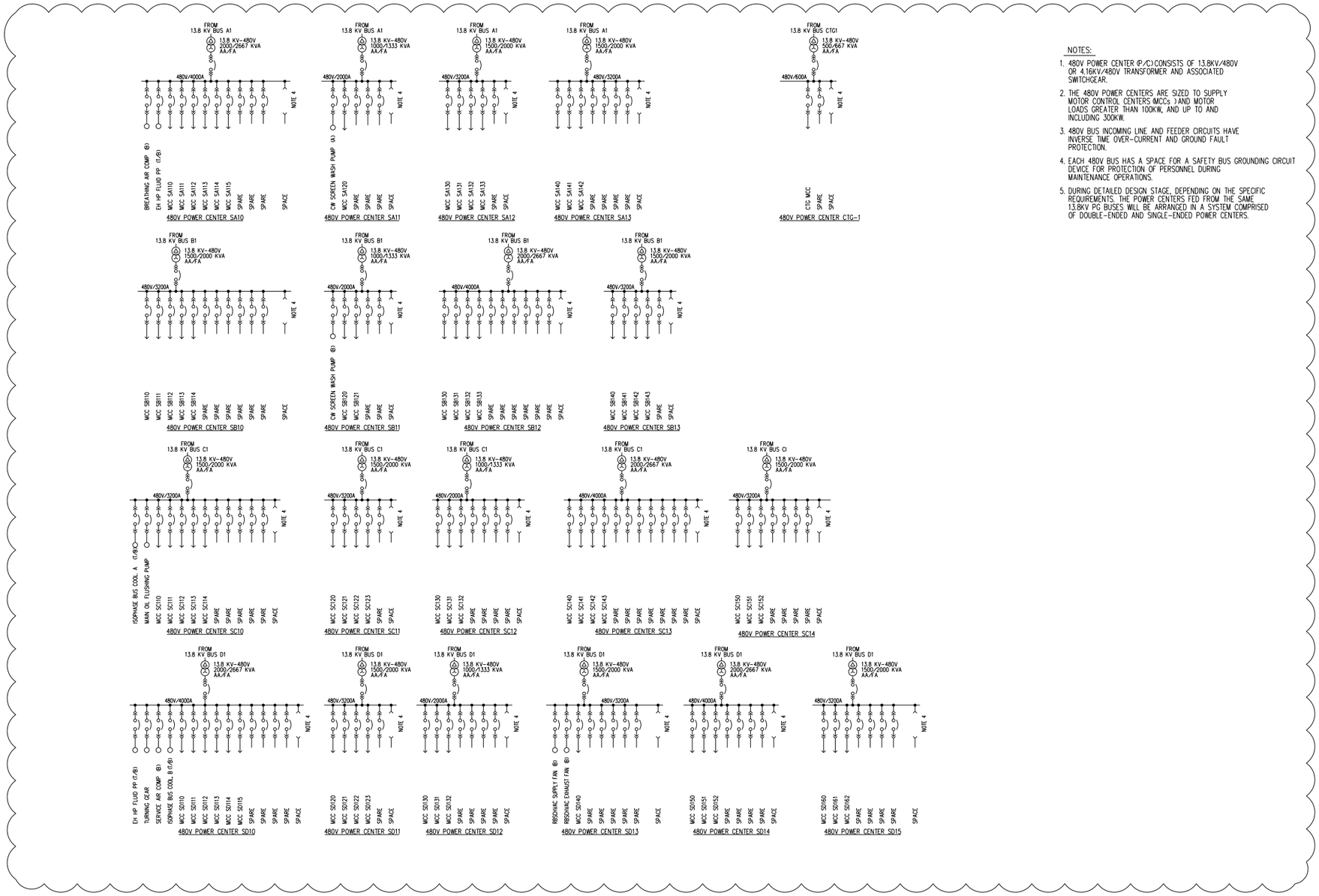


NOTES:

1. 480V POWER CENTER (P/C) CONSISTS OF 13.8KV/480V OR 4.16KV/480V TRANSFORMER AND ASSOCIATED SWITCHGEAR.
2. THE 480V POWER CENTERS ARE SIZED TO SUPPLY MOTOR CONTROL CENTERS (MCCs ) AND MOTOR LOADS GREATER THAN 100KW, AND UP TO AND INCLUDING 300KW.
3. 480V BUS INCOMING LINE AND FEEDER CIRCUITS HAVE INVERSE TIME OVER-CURRENT AND GROUND FAULT PROTECTION.
4. EACH 480V BUS HAS A SPACE FOR A SAFETY BUS GROUNDING CIRCUIT DEVICE FOR PROTECTION OF PERSONNEL DURING MAINTENANCE OPERATIONS.
5. DURING DETAILED DESIGN STAGE, DEPENDING ON THE SPECIFIC REQUIREMENTS. THE POWER CENTERS FED FROM THE SAME 13.8KV PG BUSES WILL BE ARRANGED IN A SYSTEM COMPRISED OF DOUBLE-ENDED AND SINGLE-ENDED POWER CENTERS.

**Figure 8.3-1 – Electrical Power Distribution System Single Line Diagram (Sheet 2 of 4)**

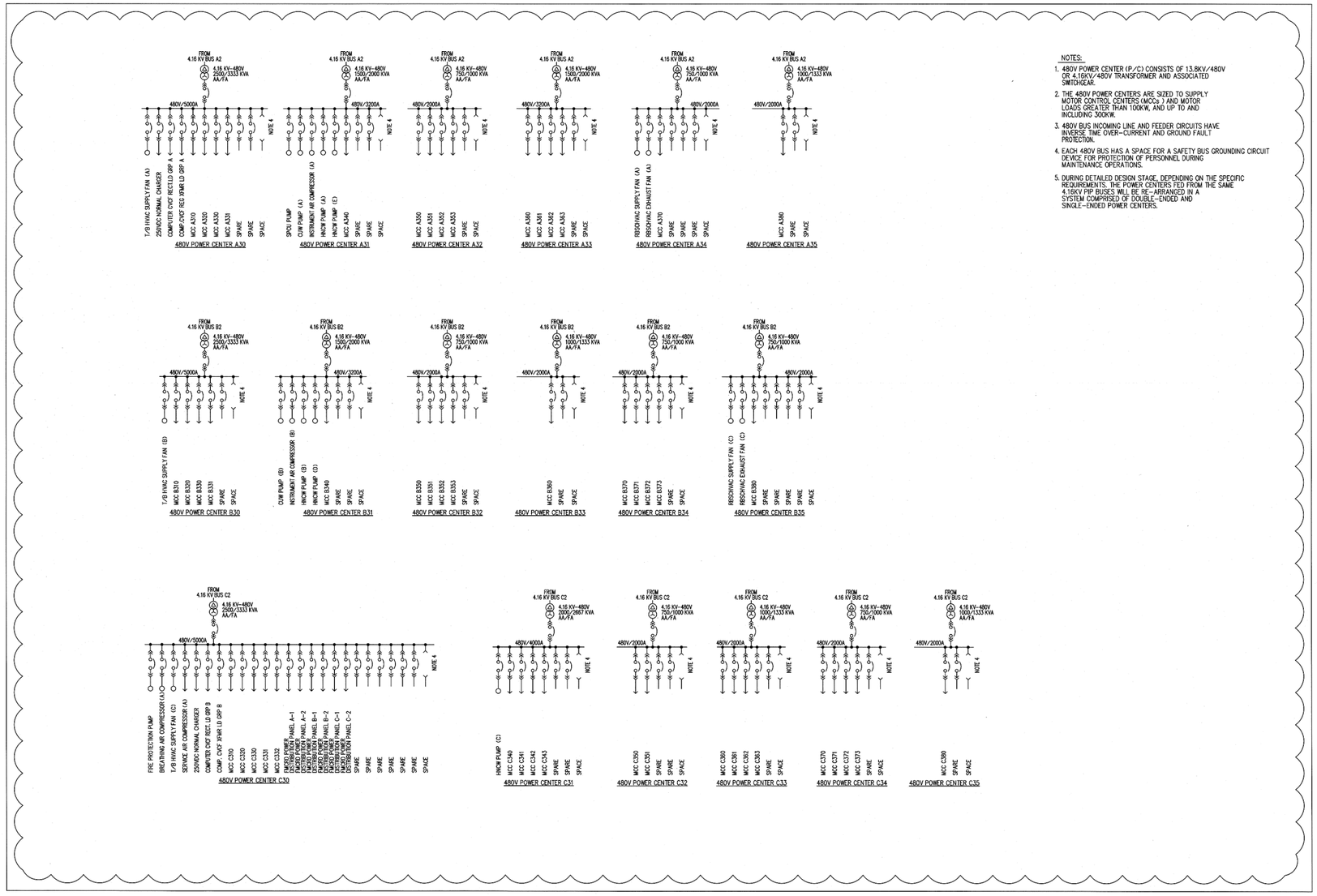


**Figure 8.3-1 – Electrical Power Distribution System Single Line Diagram (Sheet 3 of 4)**

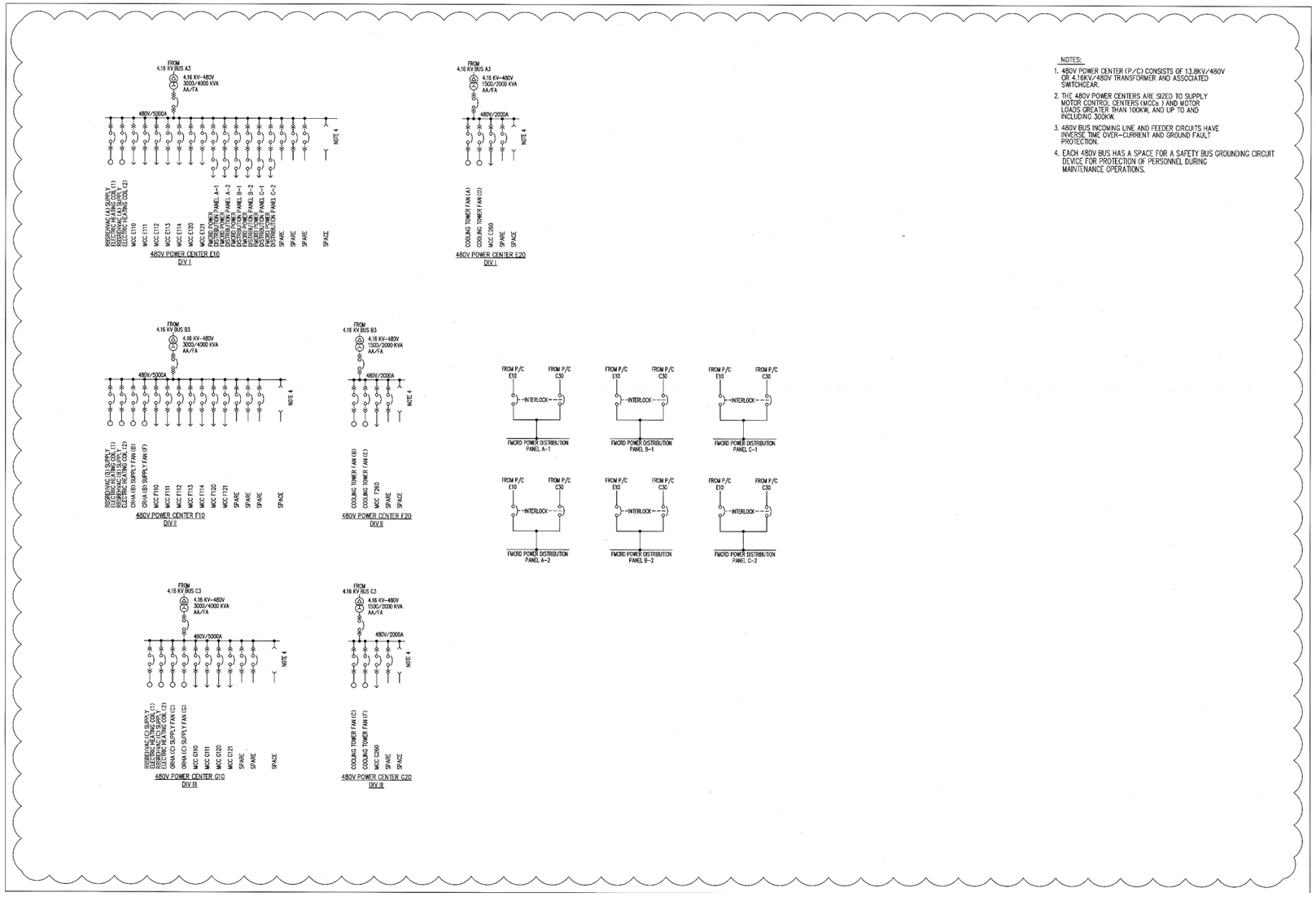


NOTES:

1. 480V POWER CENTER (P/C) CONSISTS OF 13.8KV/480V OR 4.16KV/480V TRANSFORMER AND ASSOCIATED SWITCHGEAR.
2. THE 480V POWER CENTERS ARE SIZED TO SUPPLY MOTOR CONTROL CENTERS (MCCs) AND MOTOR LOADS GREATER THAN 100KW, AND UP TO AND INCLUDING 300KW.
3. 480V BUS INCOMING LINE AND FEEDER CIRCUITS HAVE INVERSE TIME OVER-CURRENT AND GROUND FAULT PROTECTION.
4. EACH 480V BUS HAS A SPACE FOR A SAFETY BUS GROUNDING CIRCUIT DEVICE FOR PROTECTION OF PERSONNEL DURING MAINTENANCE OPERATIONS.

**Figure 8.3-1 – Electrical Power Distribution System Single Line Diagram (Sheet 4 of 4)**

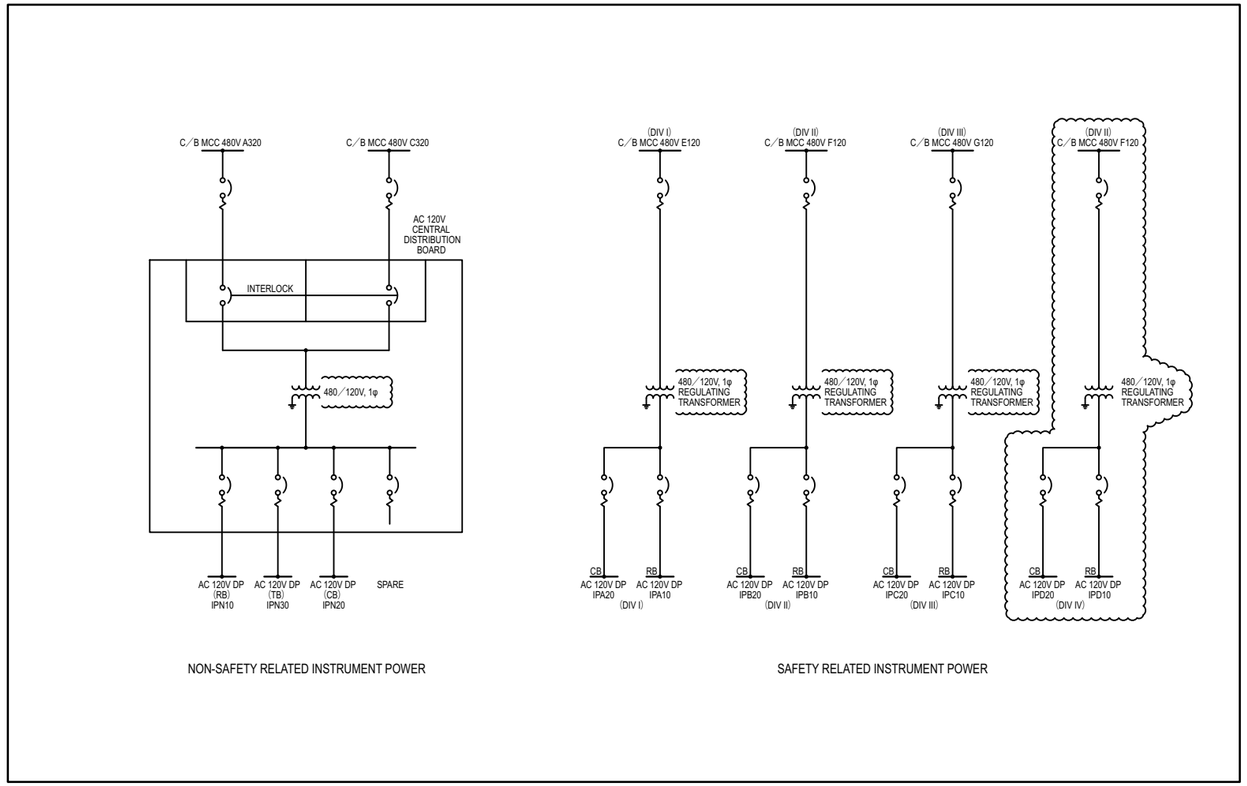


**Figure 8.3-2 – Instrument and Control Power Supply System Single Line Diagram (Sheet 1 of 1)**