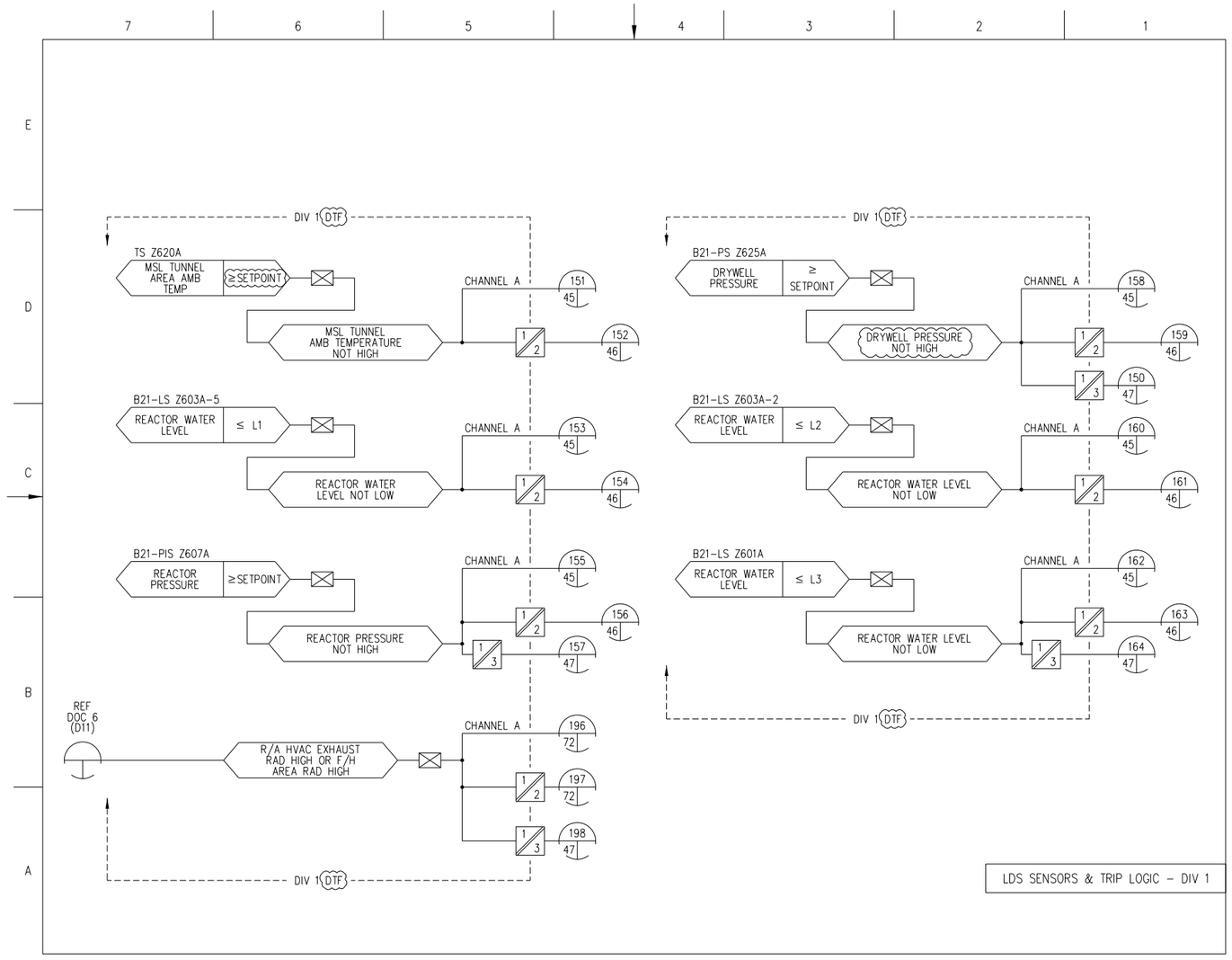

Figure 7.3-5 – Leak Detection and Isolation System IBD (Sheet 41 of 77)

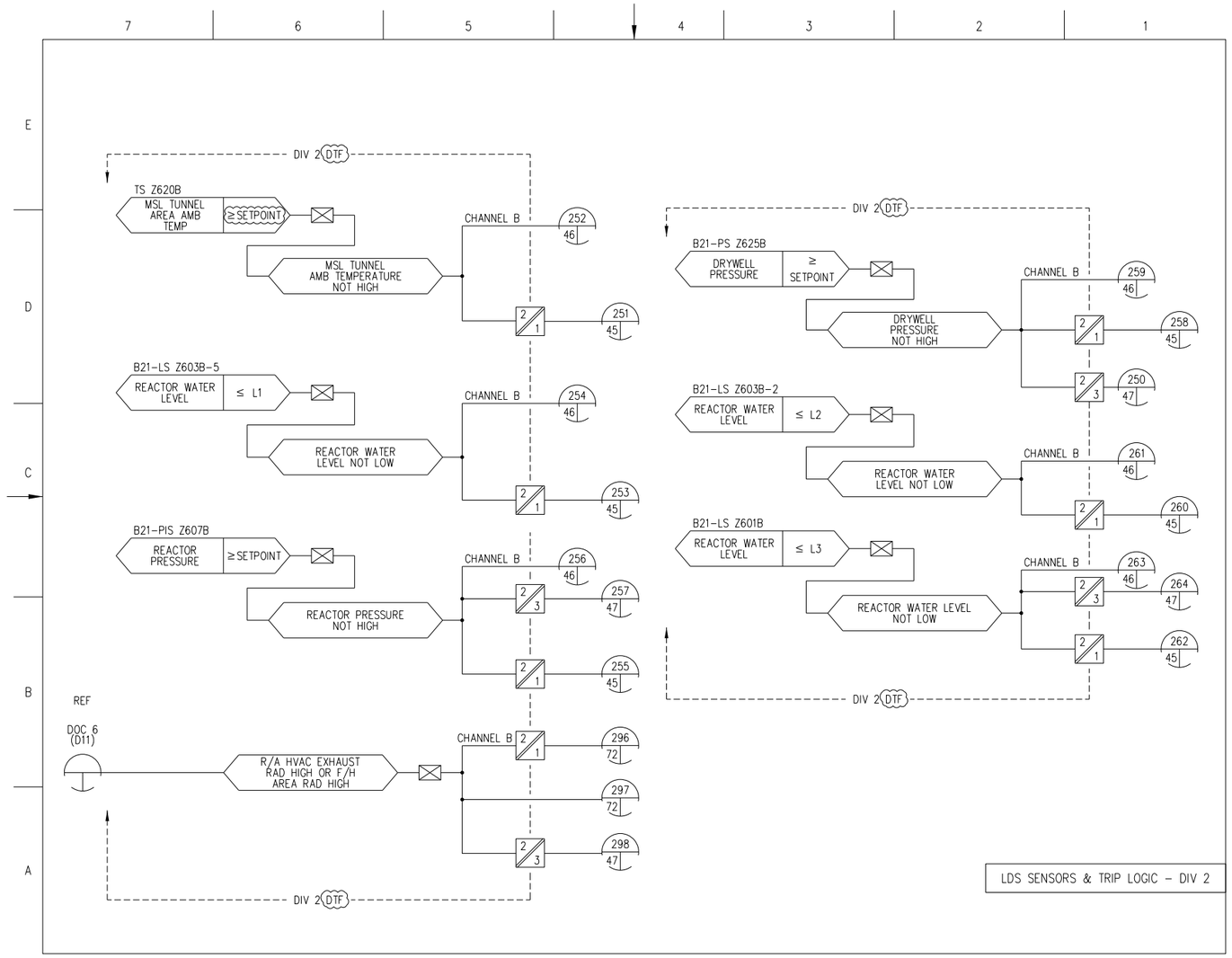

Figure 7.3-5 – Leak Detection and Isolation System IBD (Sheet 42 of 77)

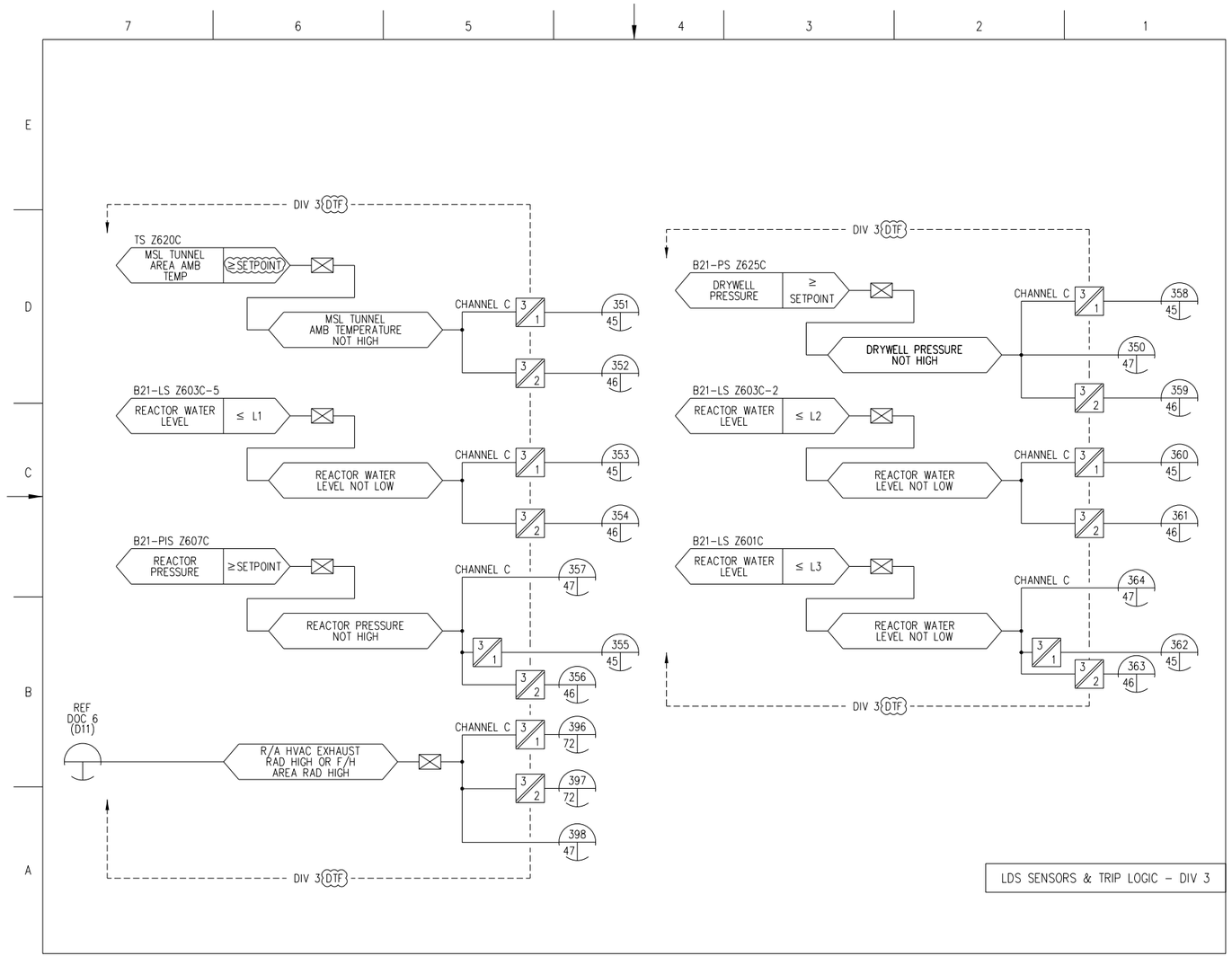

Figure 7.3-5 – Leak Detection and Isolation System IBD (Sheet 43 of 77)

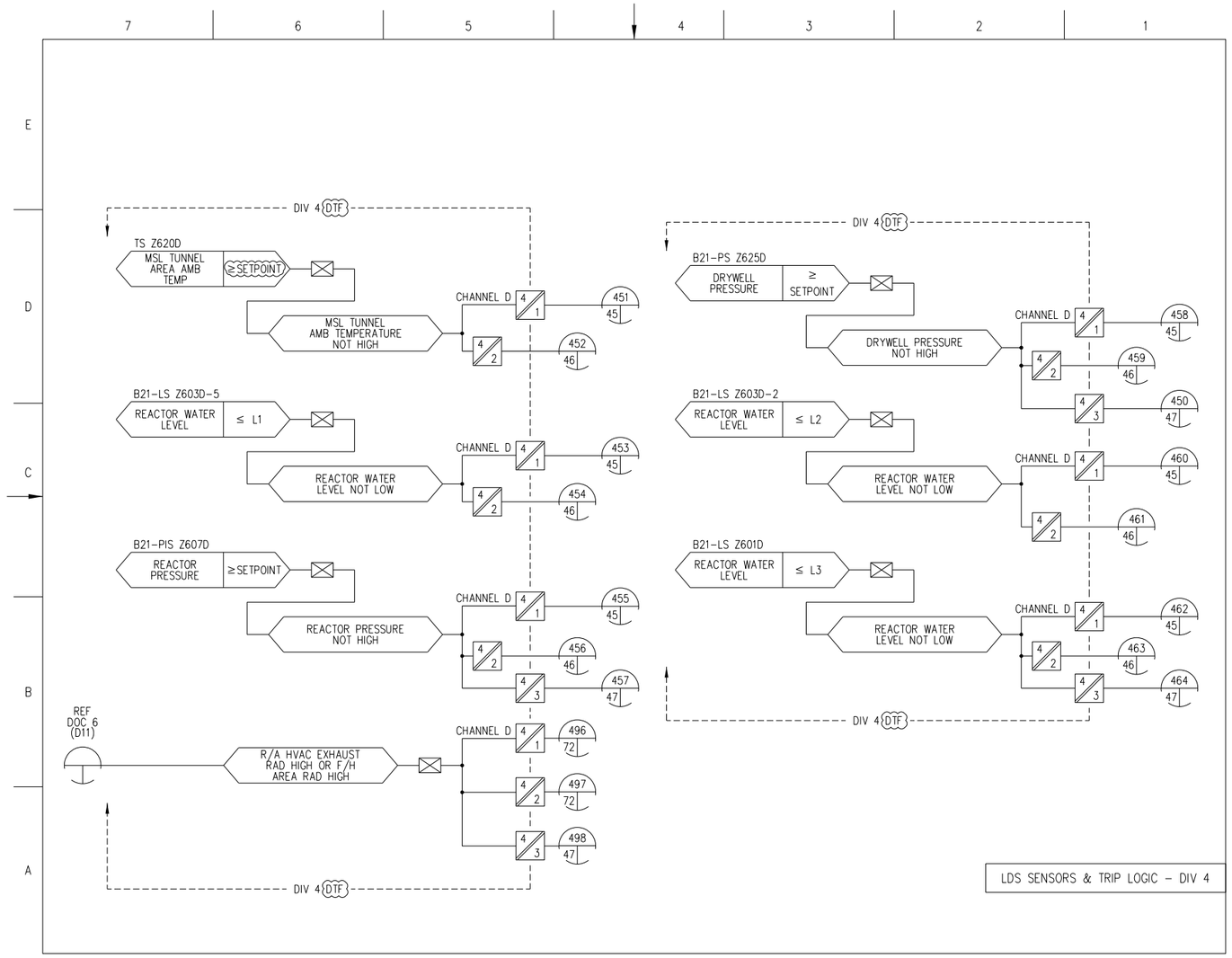

Figure 7.3-5 – Leak Detection and Isolation System IBD (Sheet 44 of 77)

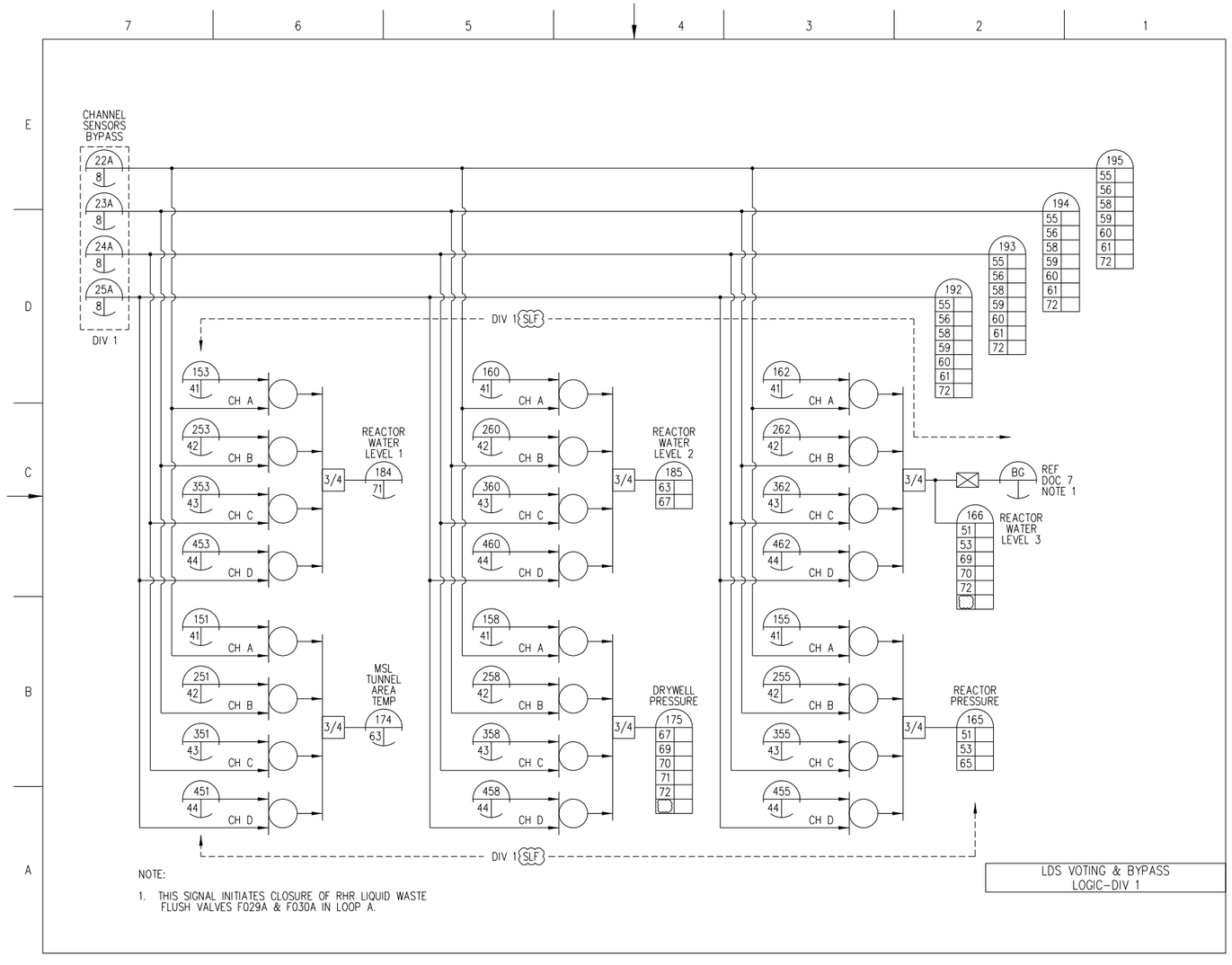

Figure 7.3-5 – Leak Detection and Isolation System IBD (Sheet 45 of 77)

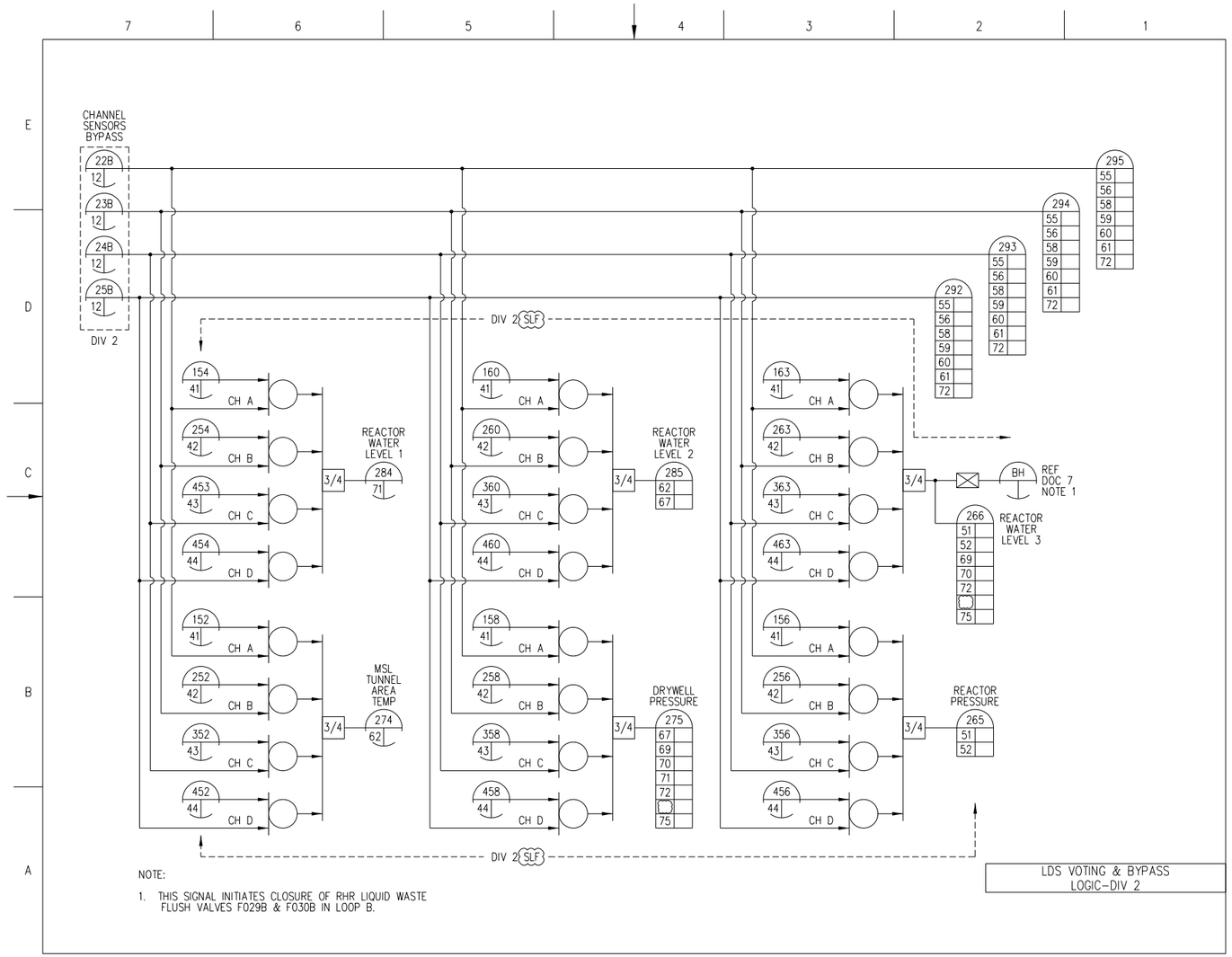

Figure 7.3-5 – Leak Detection and Isolation System IBD (Sheet 46 of 77)

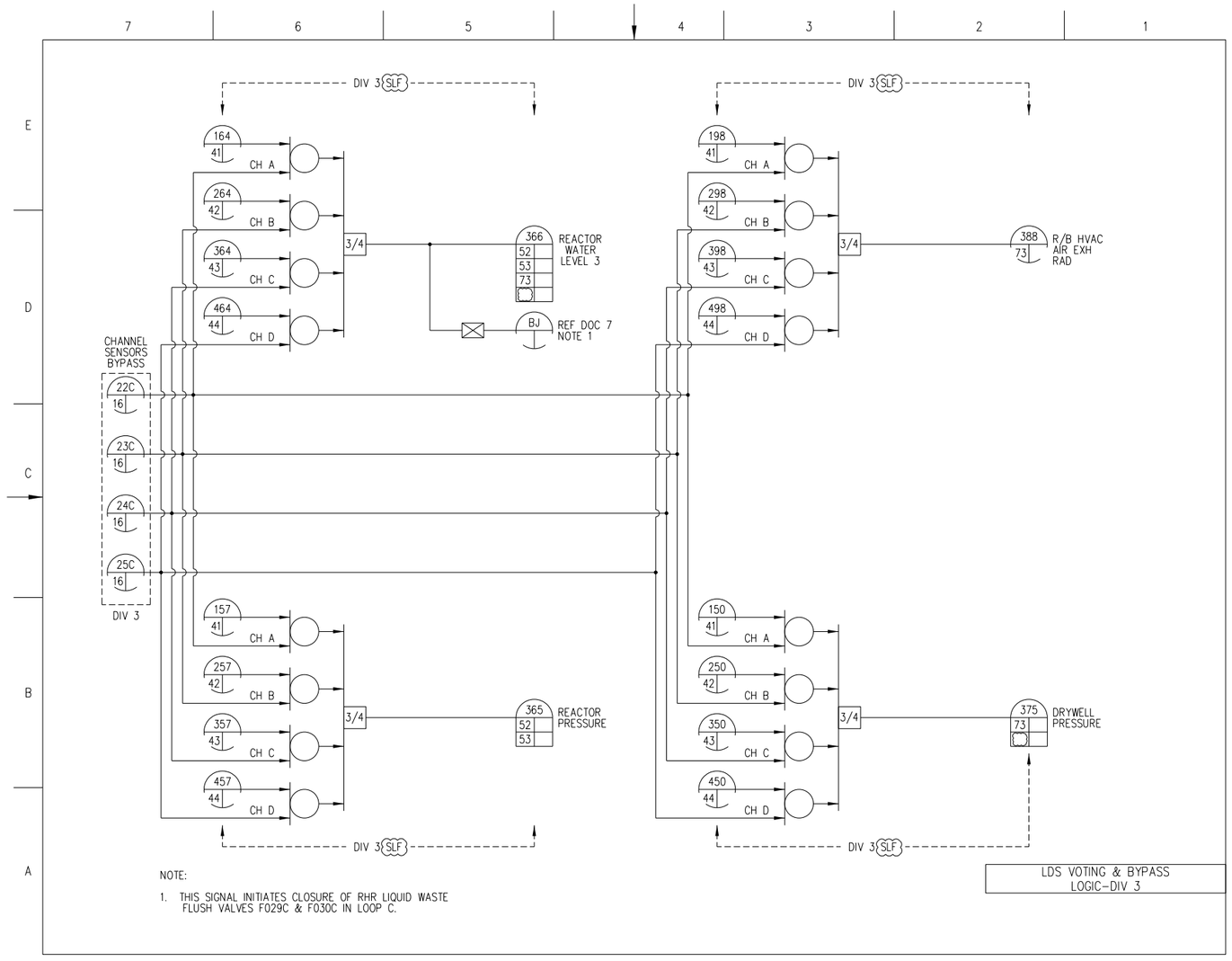

Figure 7.3-5 – Leak Detection and Isolation System IBD (Sheet 47 of 77)

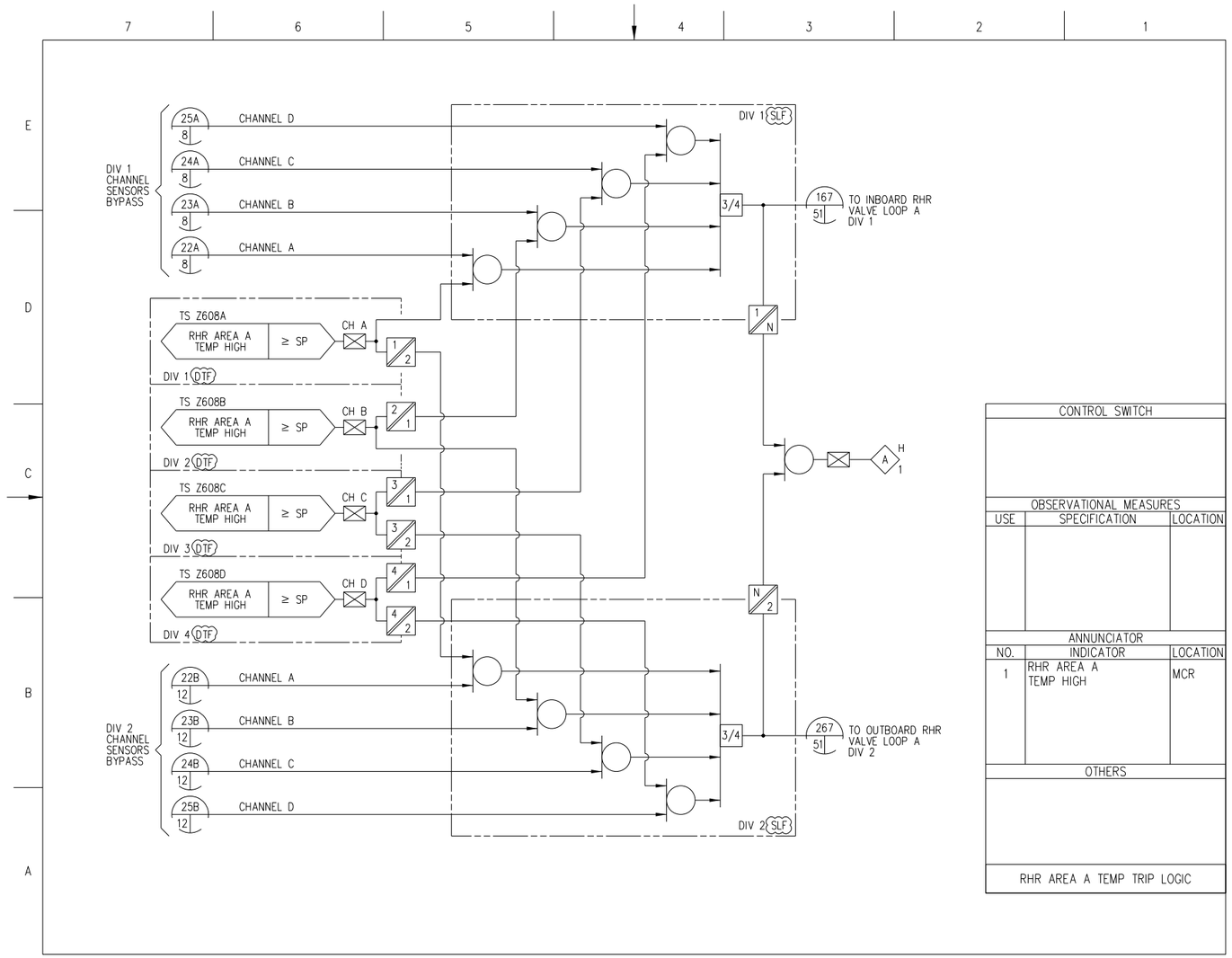

Figure 7.3-5 – Leak Detection and Isolation System IBD (Sheet 48 of 77)

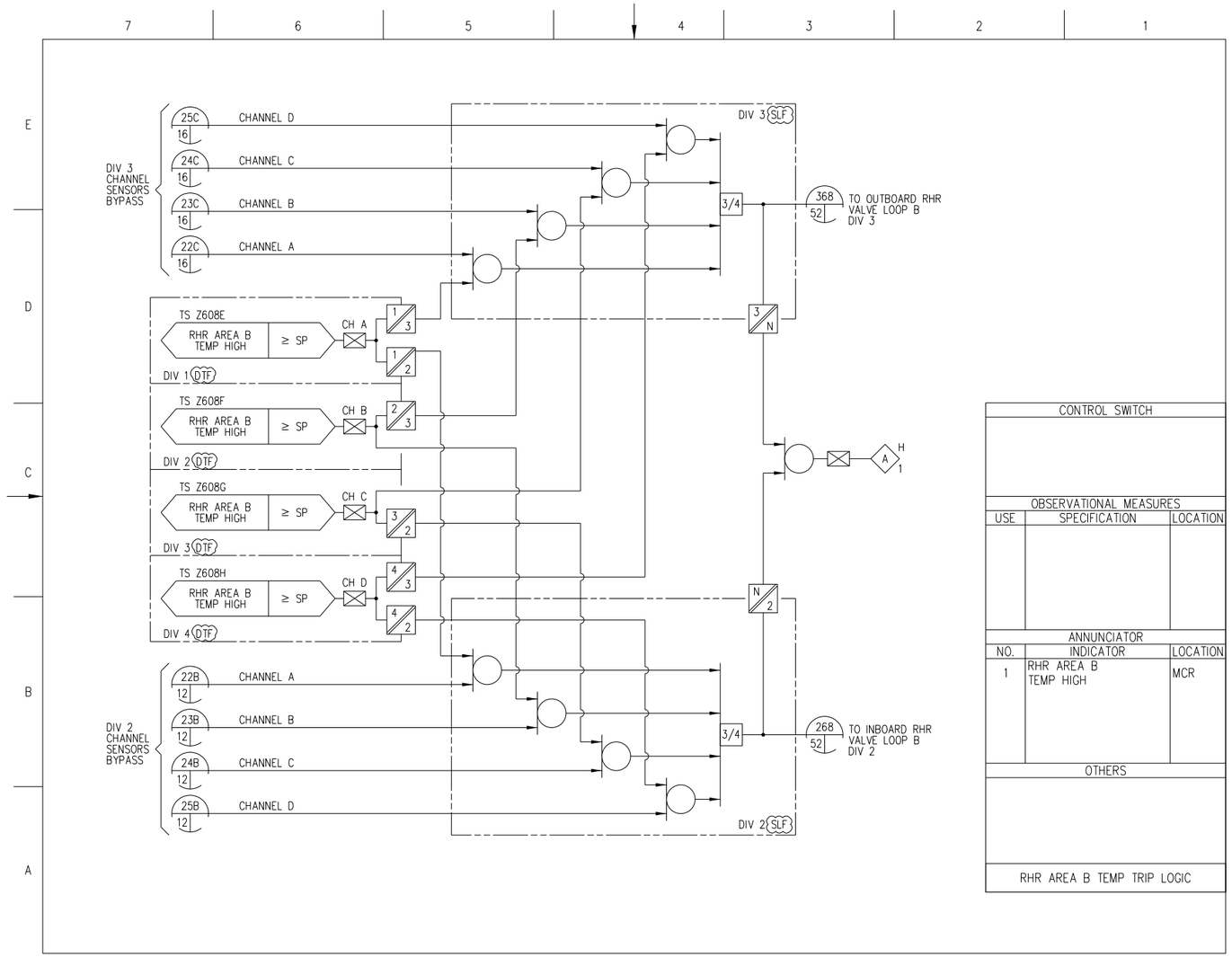

Figure 7.3-5 – Leak Detection and Isolation System IBD (Sheet 49 of 77)

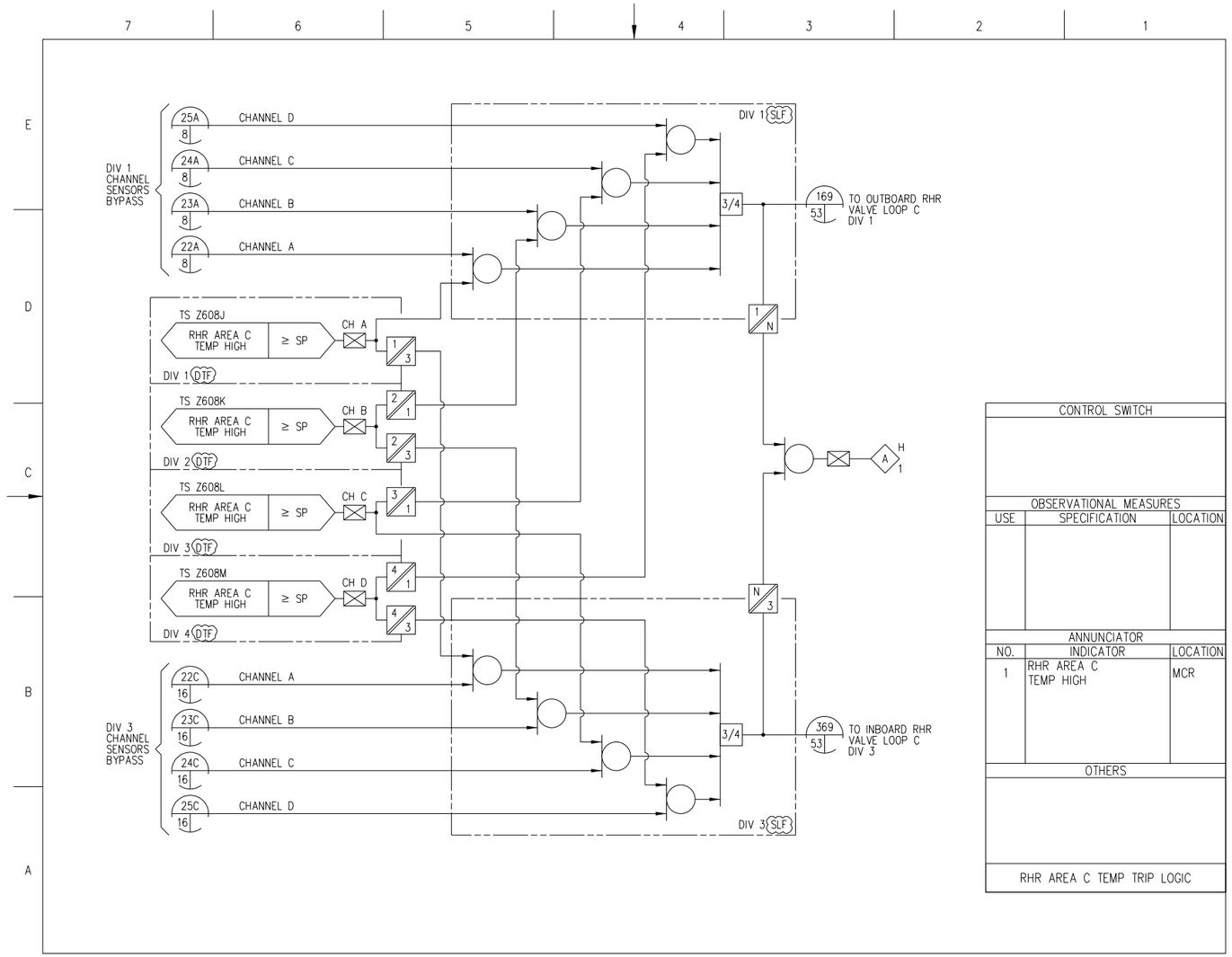

Figure 7.3-5 – Leak Detection and Isolation System IBD (Sheet 50 of 77)

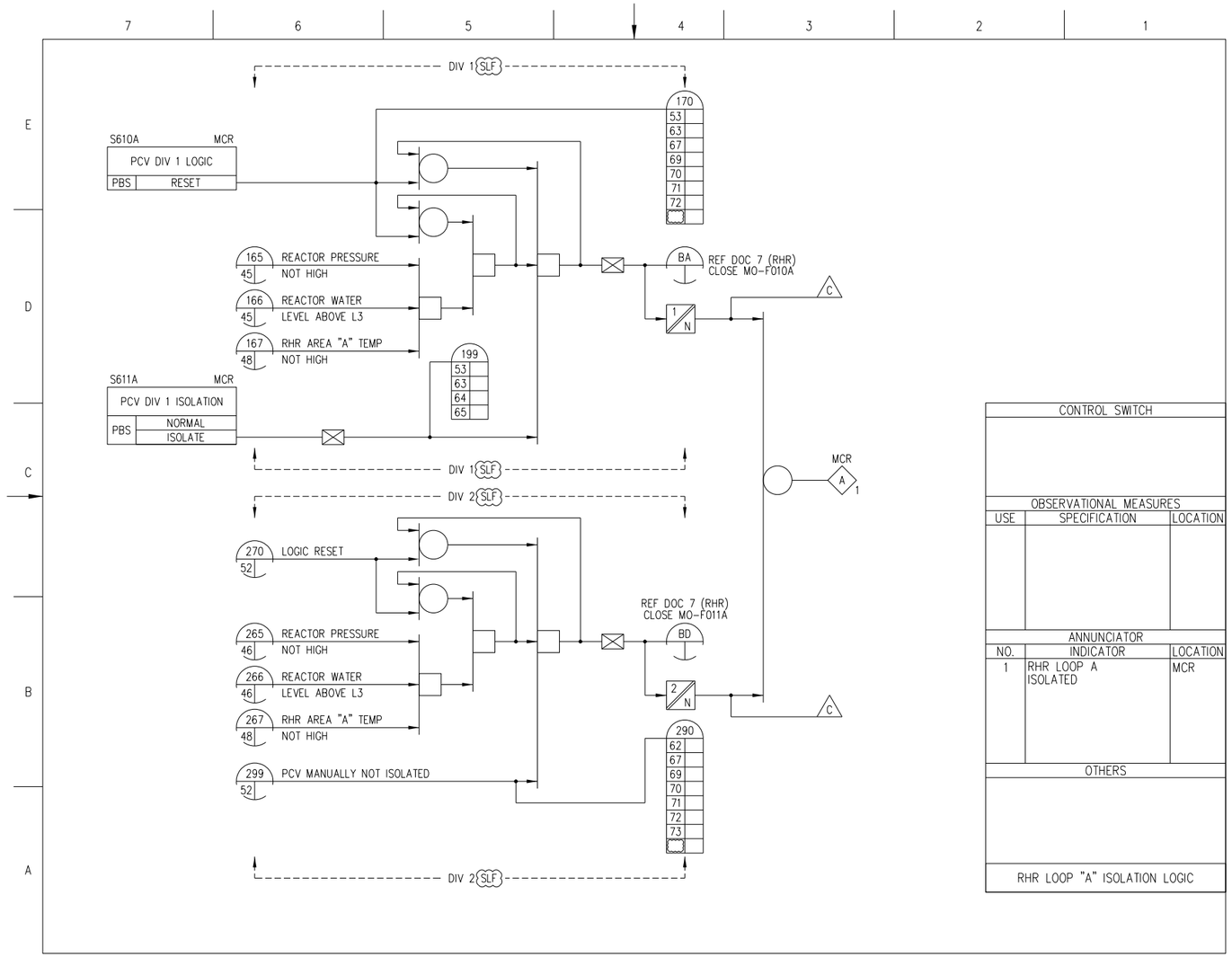

Figure 7.3-5 – Leak Detection and Isolation System IBD (Sheet 51 of 77)

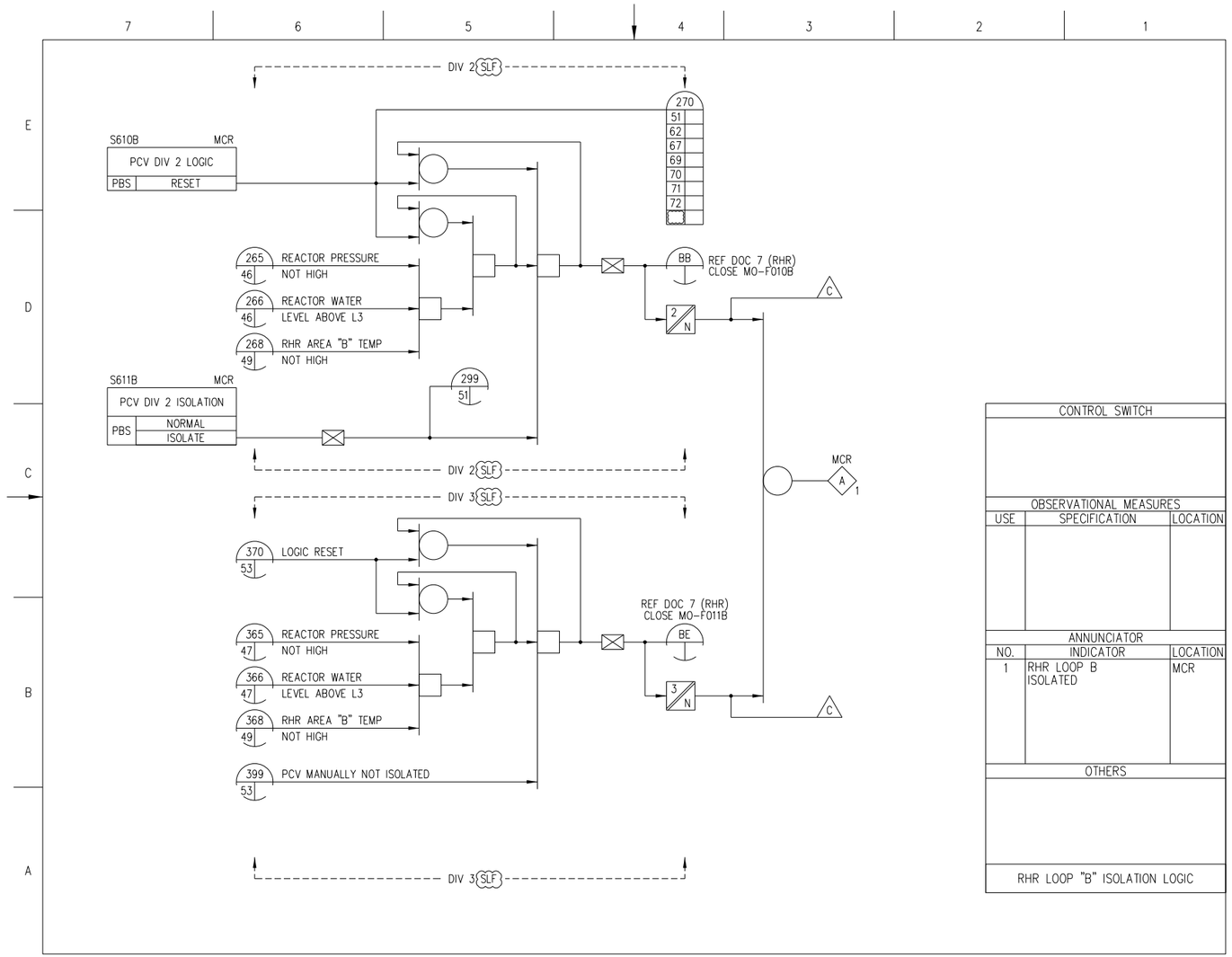

Figure 7.3-5 – Leak Detection and Isolation System IBD (Sheet 52 of 77)

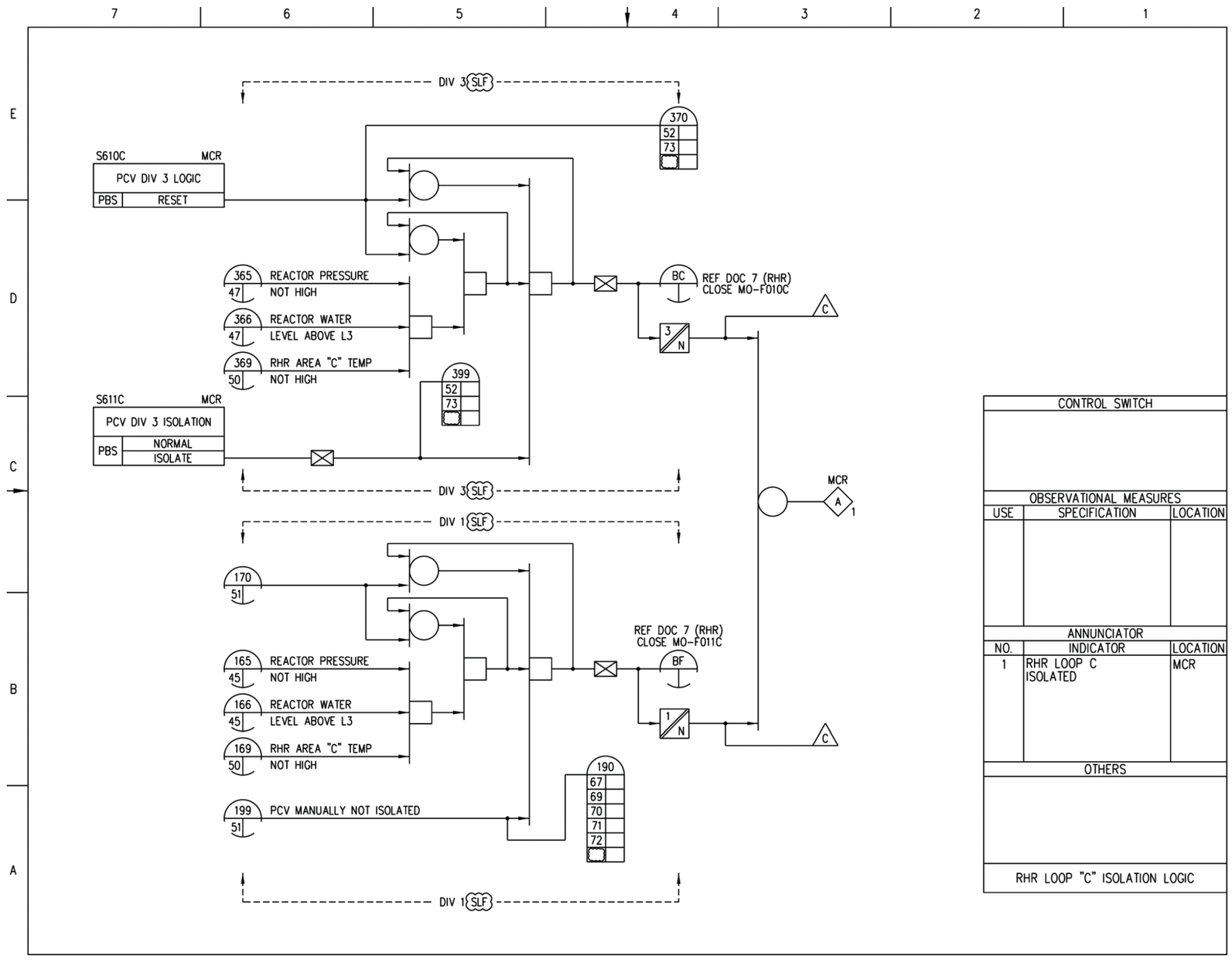

Figure 7.3-5 – Leak Detection and Isolation System IBD (Sheet 53 of 77)

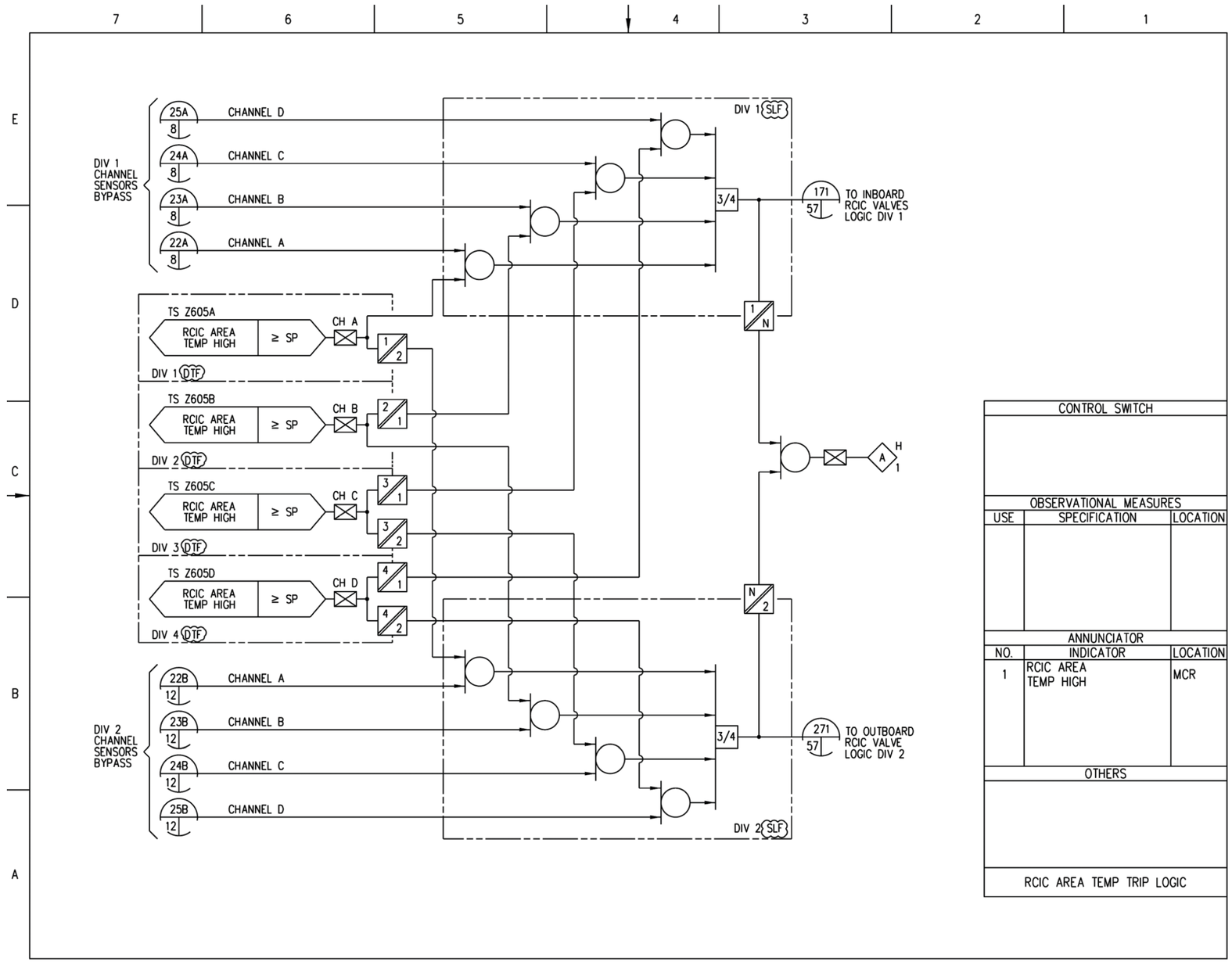

Figure 7.3-5 – Leak Detection and Isolation System IBD (Sheet 54 of 77)

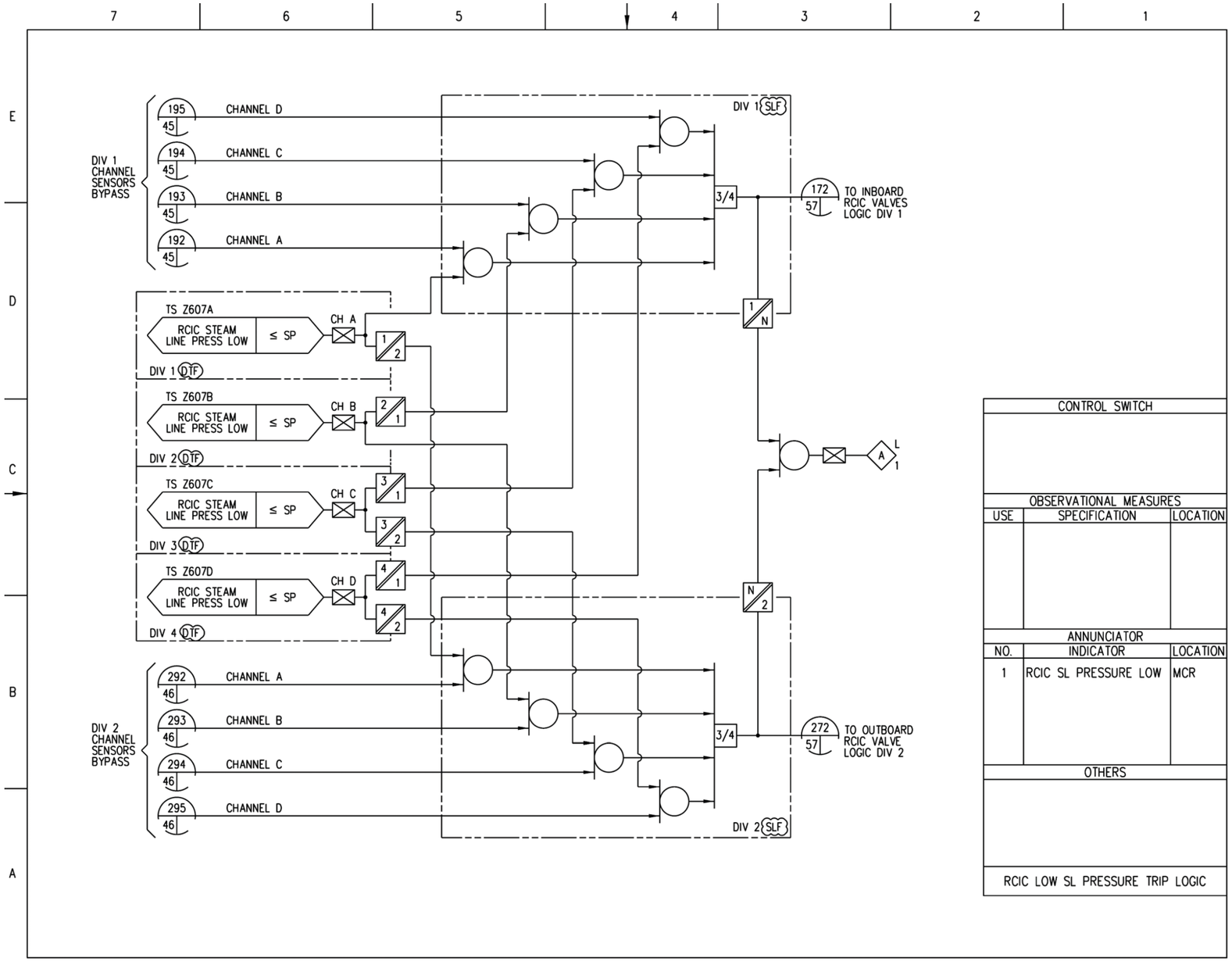

Figure 7.3-5 – Leak Detection and Isolation System IBD (Sheet 55 of 77)

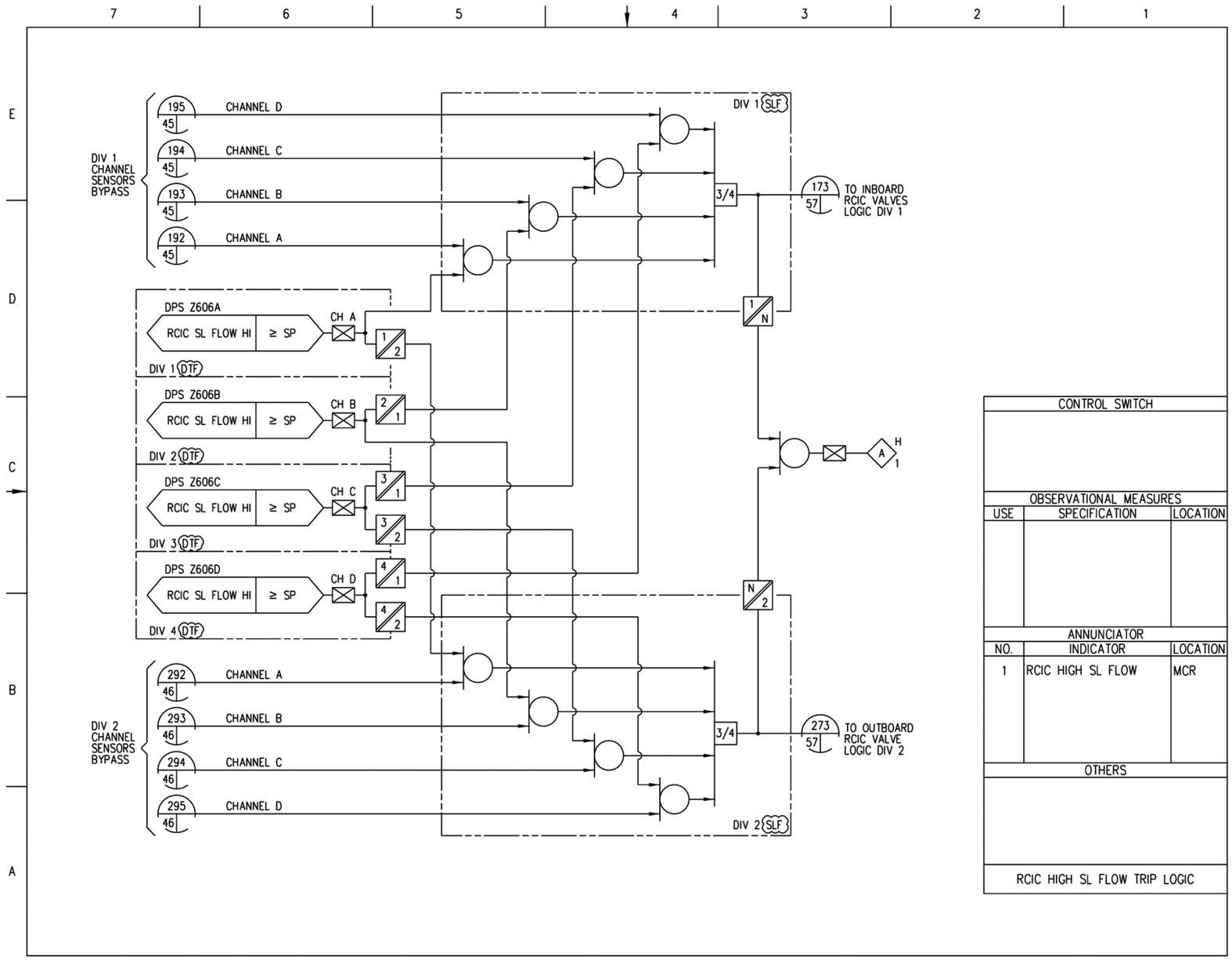

Figure 7.3-5 – Leak Detection and Isolation System IBD (Sheet 56 of 77)

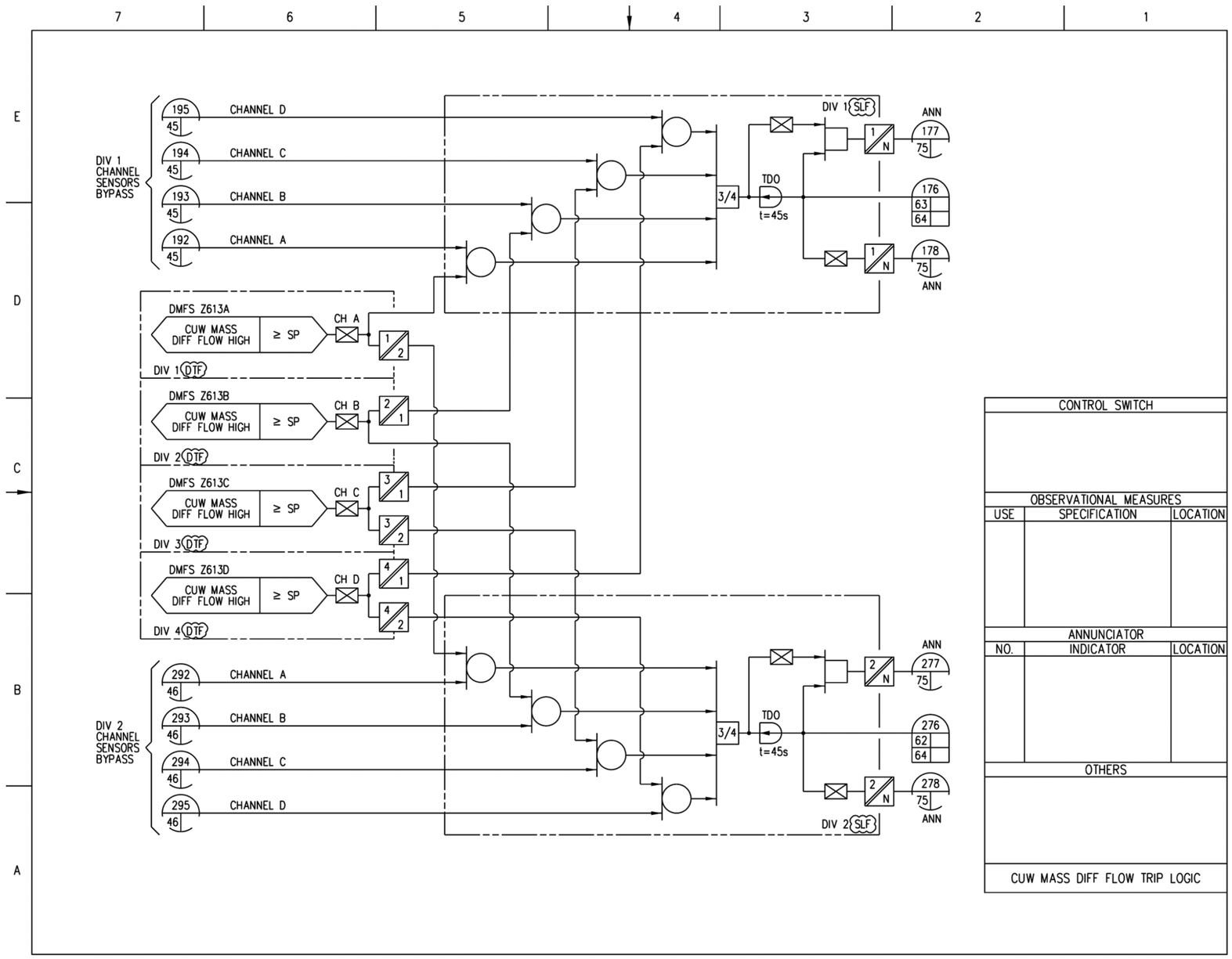

Figure 7.3-5 – Leak Detection and Isolation System IBD (Sheet 58 of 77)

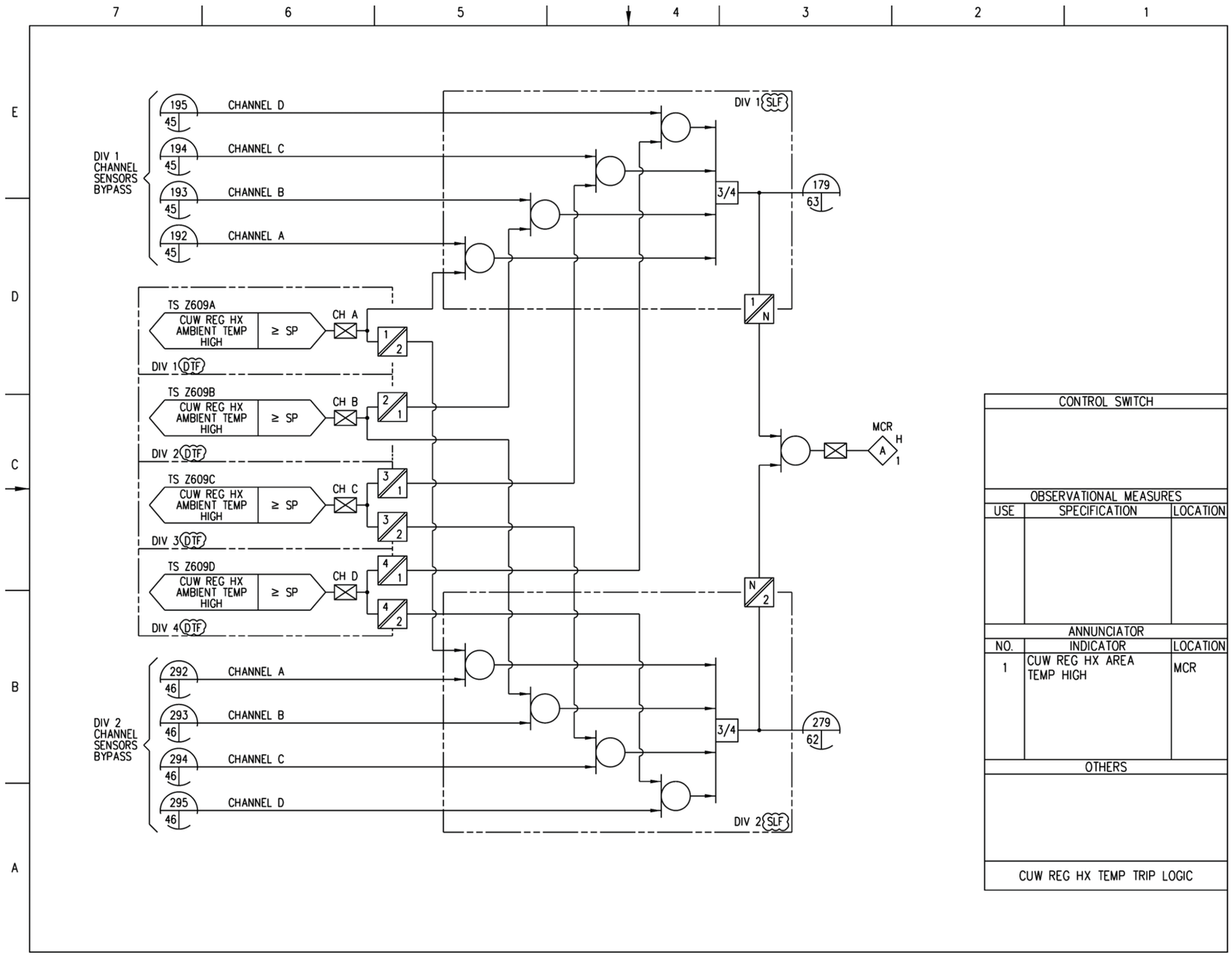

Figure 7.3-5 – Leak Detection and Isolation System IBD (Sheet 59 of 77)

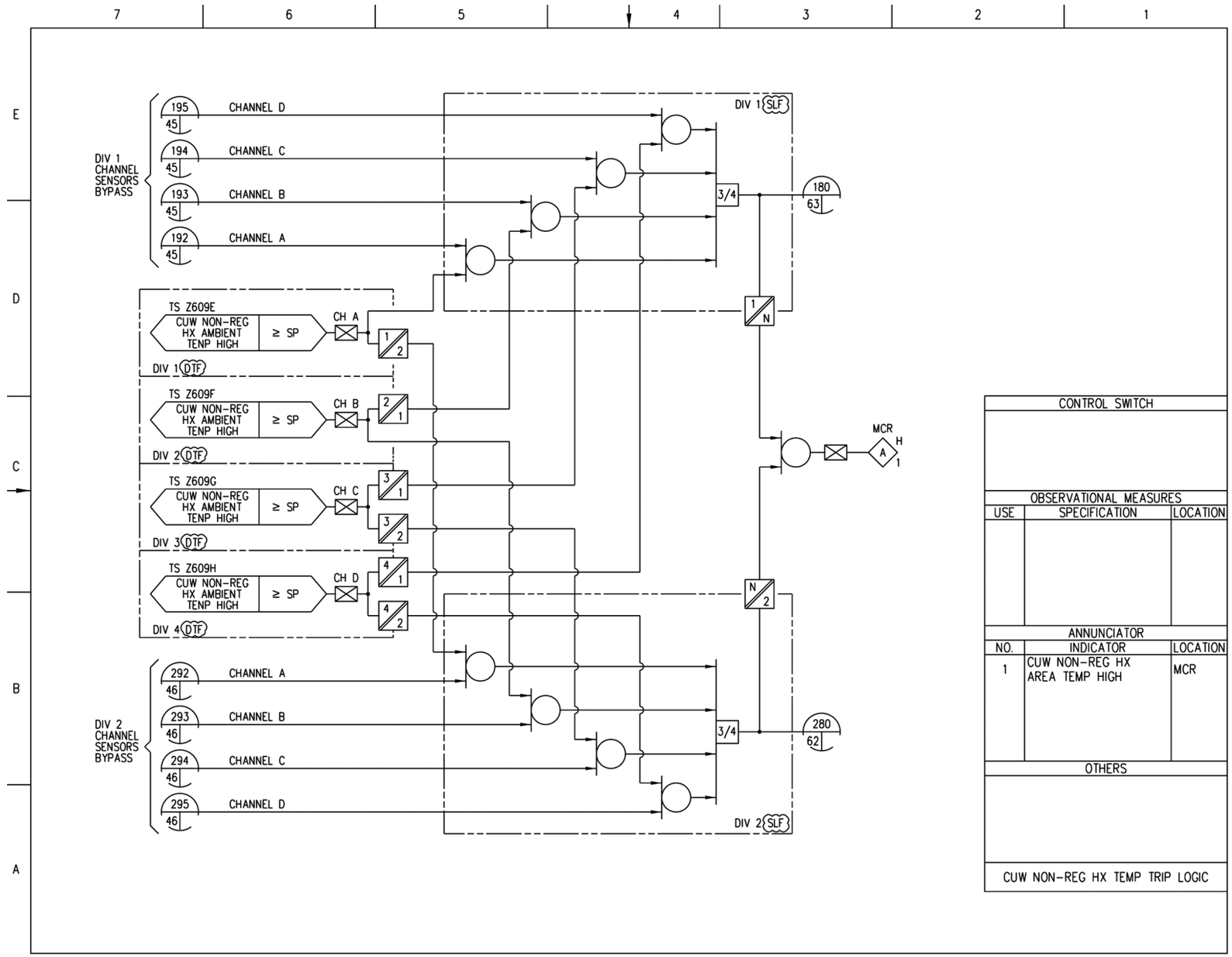

Figure 7.3-5 – Leak Detection and Isolation System IBD (Sheet 60 of 77)

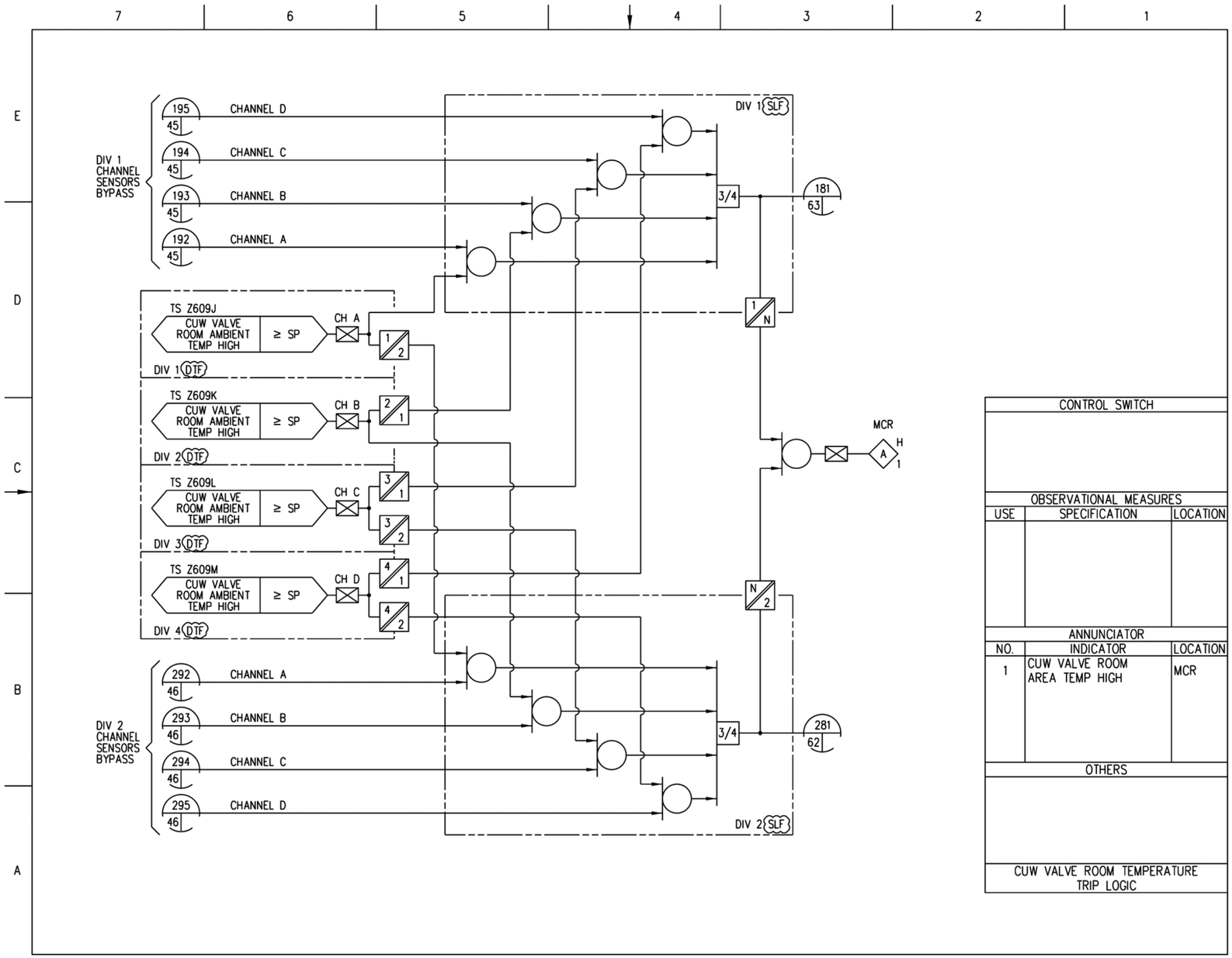

Figure 7.3-5 – Leak Detection and Isolation System IBD (Sheet 61 of 77)

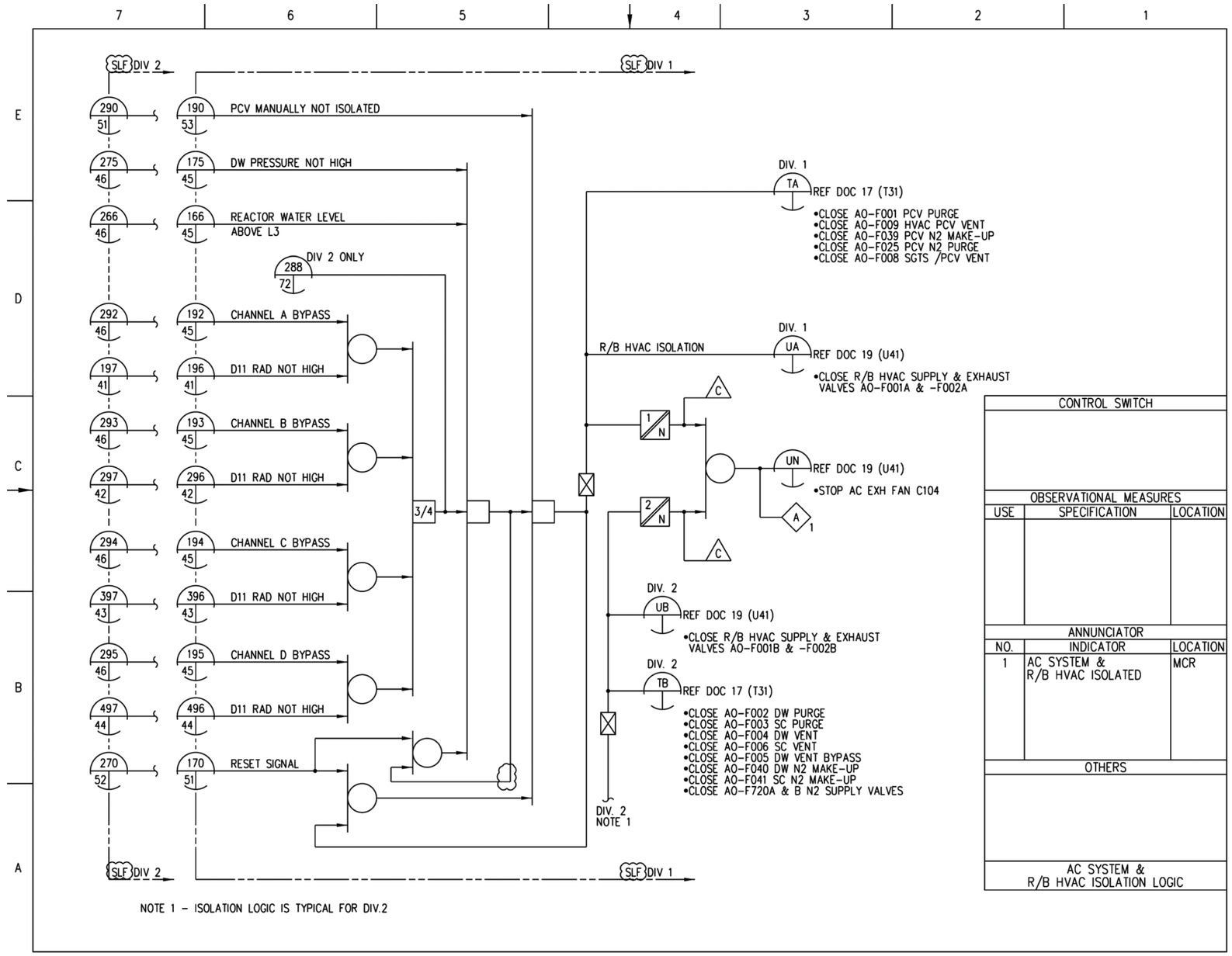

Figure 7.3-5 – Leak Detection and Isolation System IBD (Sheet 72 of 77)

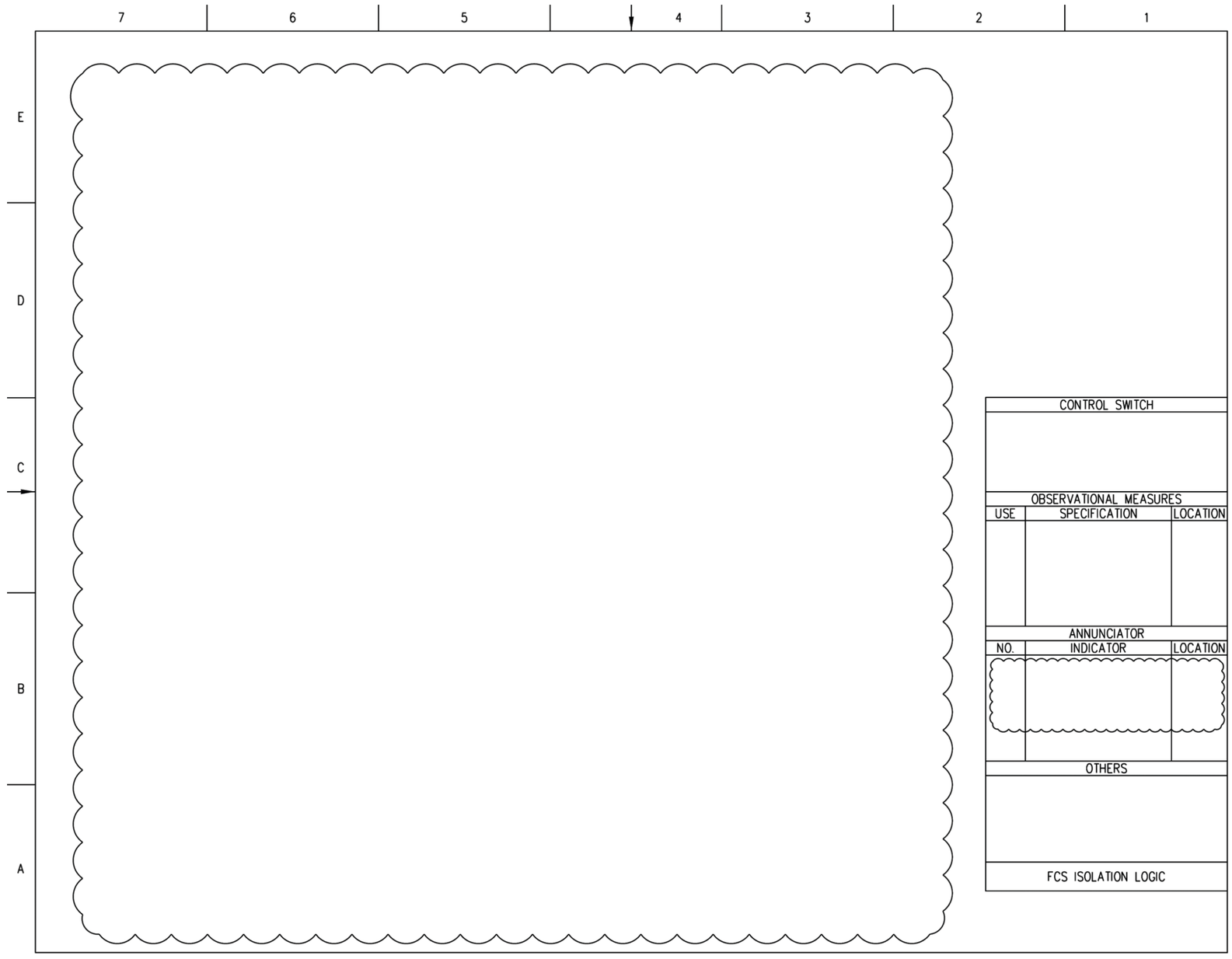

Figure 7.3-5 – Leak Detection and Isolation System IBD (Sheet 74 of 77)

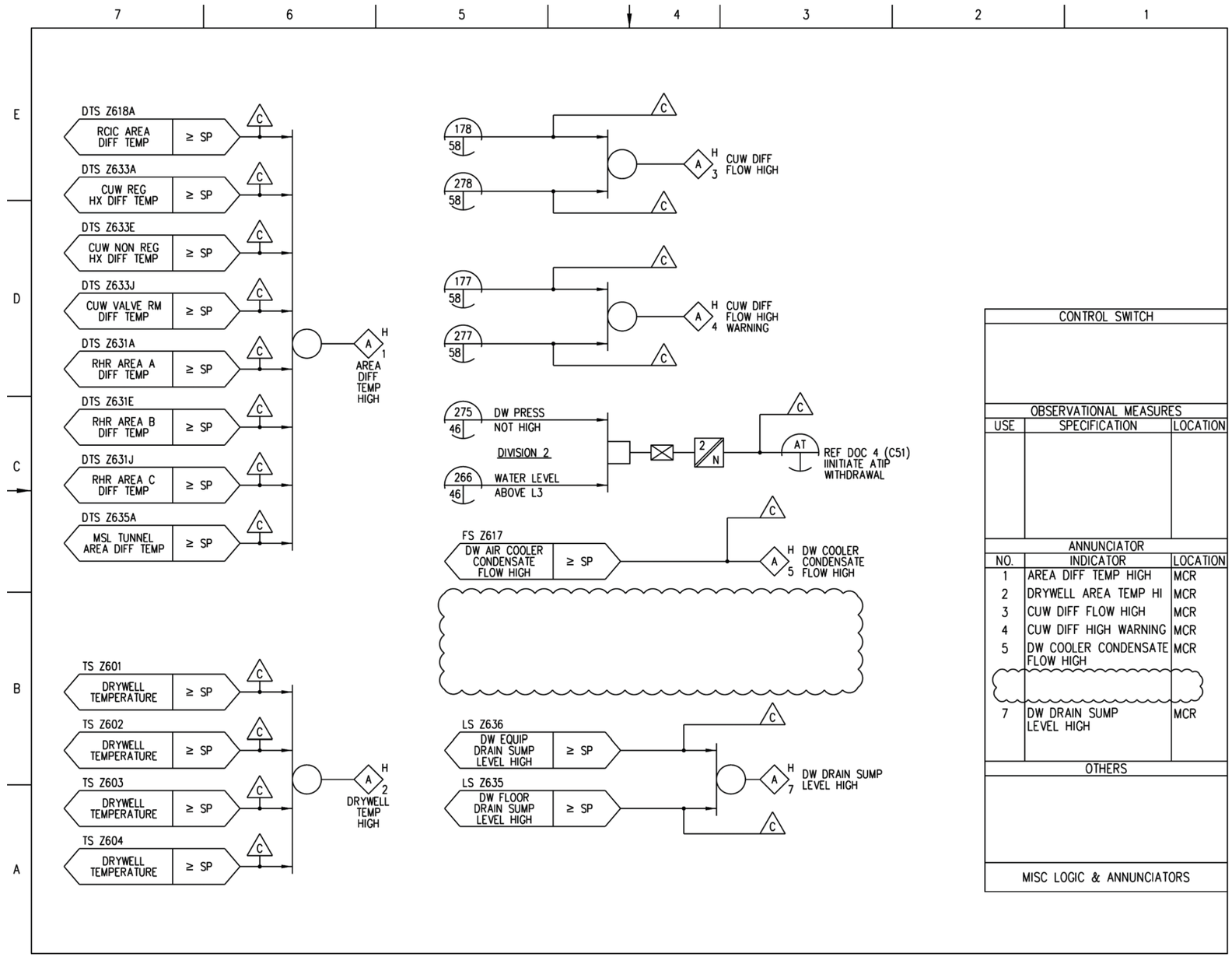

Figure 7.3-5 – Leak Detection and Isolation System IBD (Sheet 75 of 77)

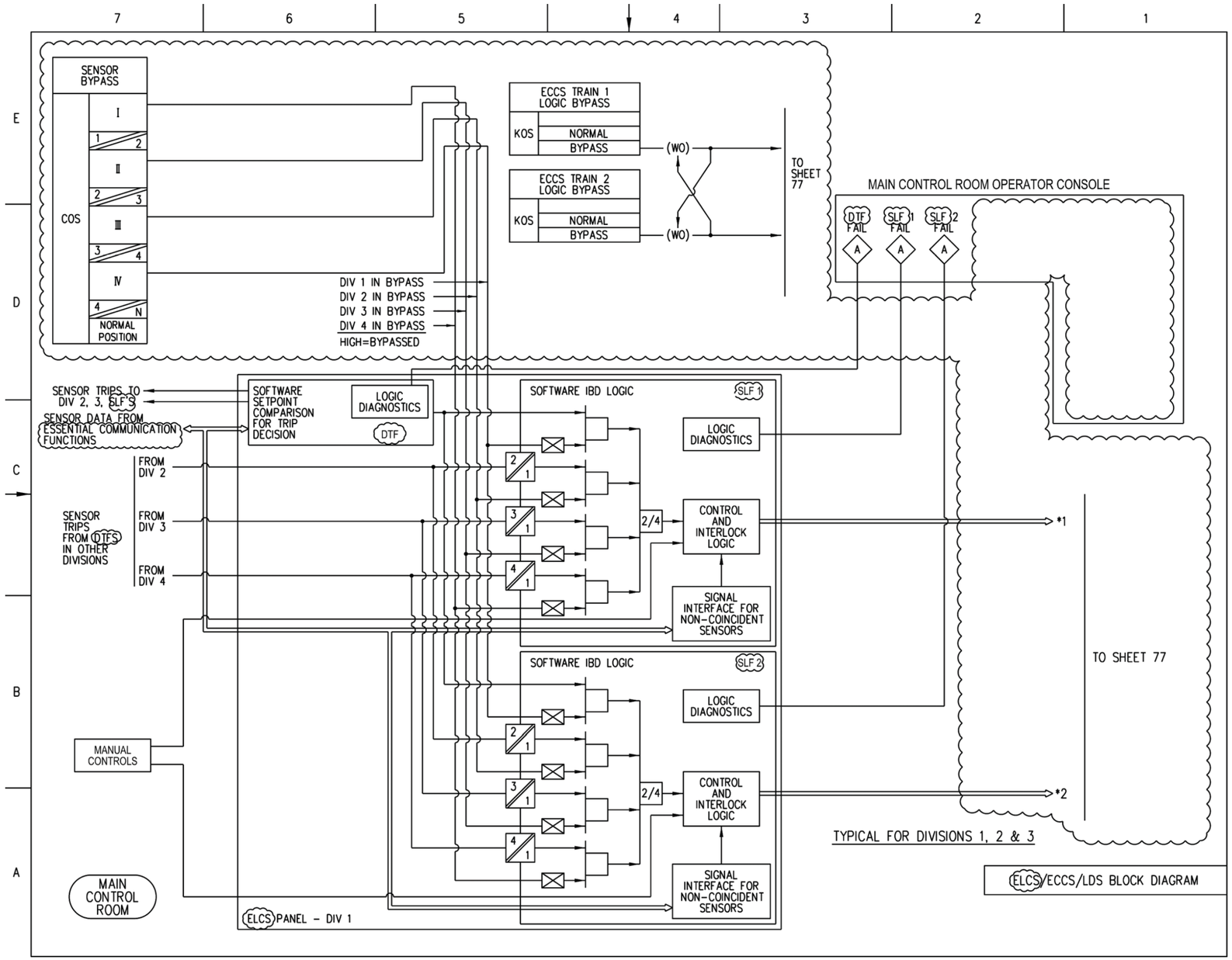

Figure 7.3-5 – Leak Detection and Isolation System IBD (Sheet 76 of 77)

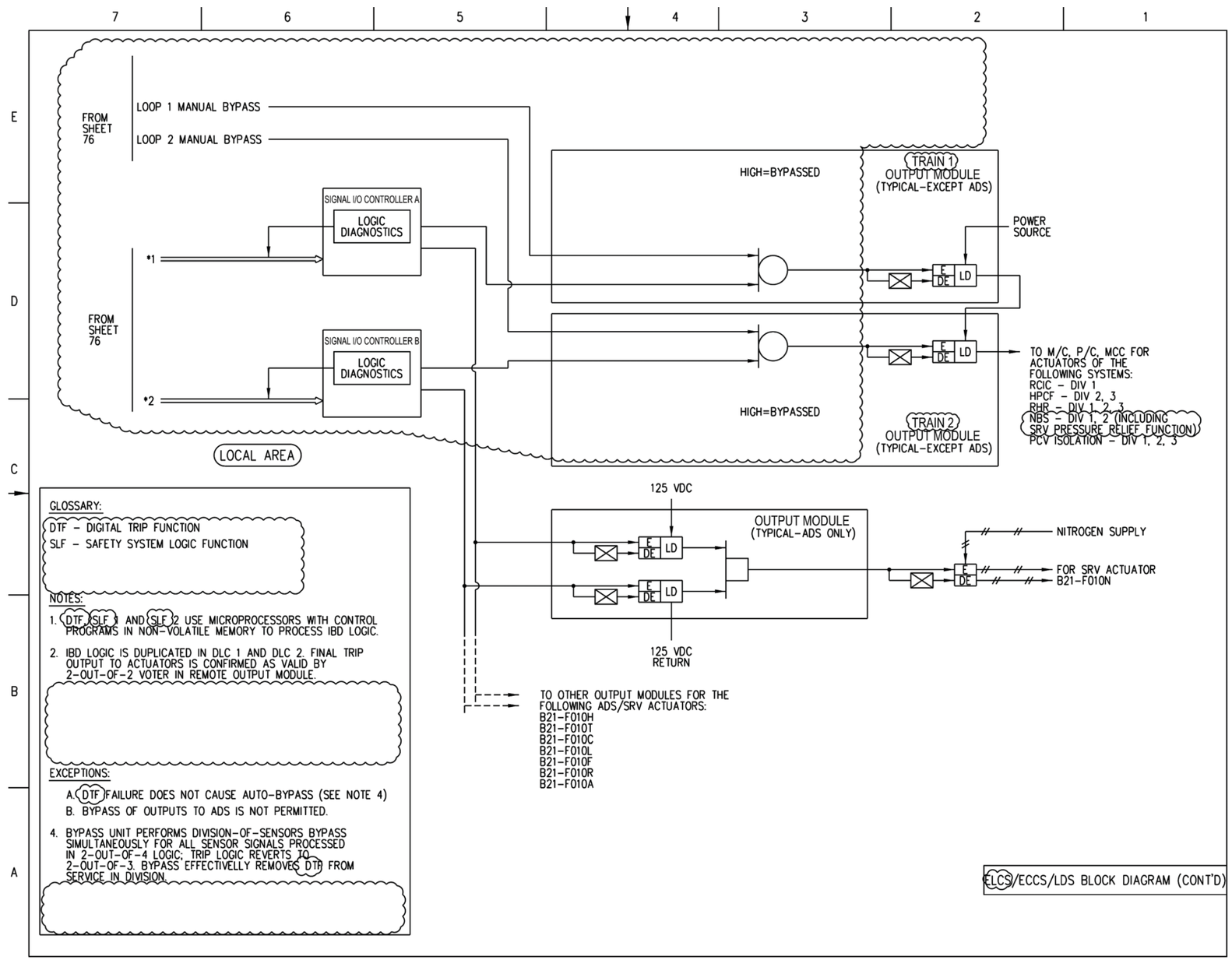

Figure 7.3-5 – Leak Detection and Isolation System IBD (Sheet 77 of 77)

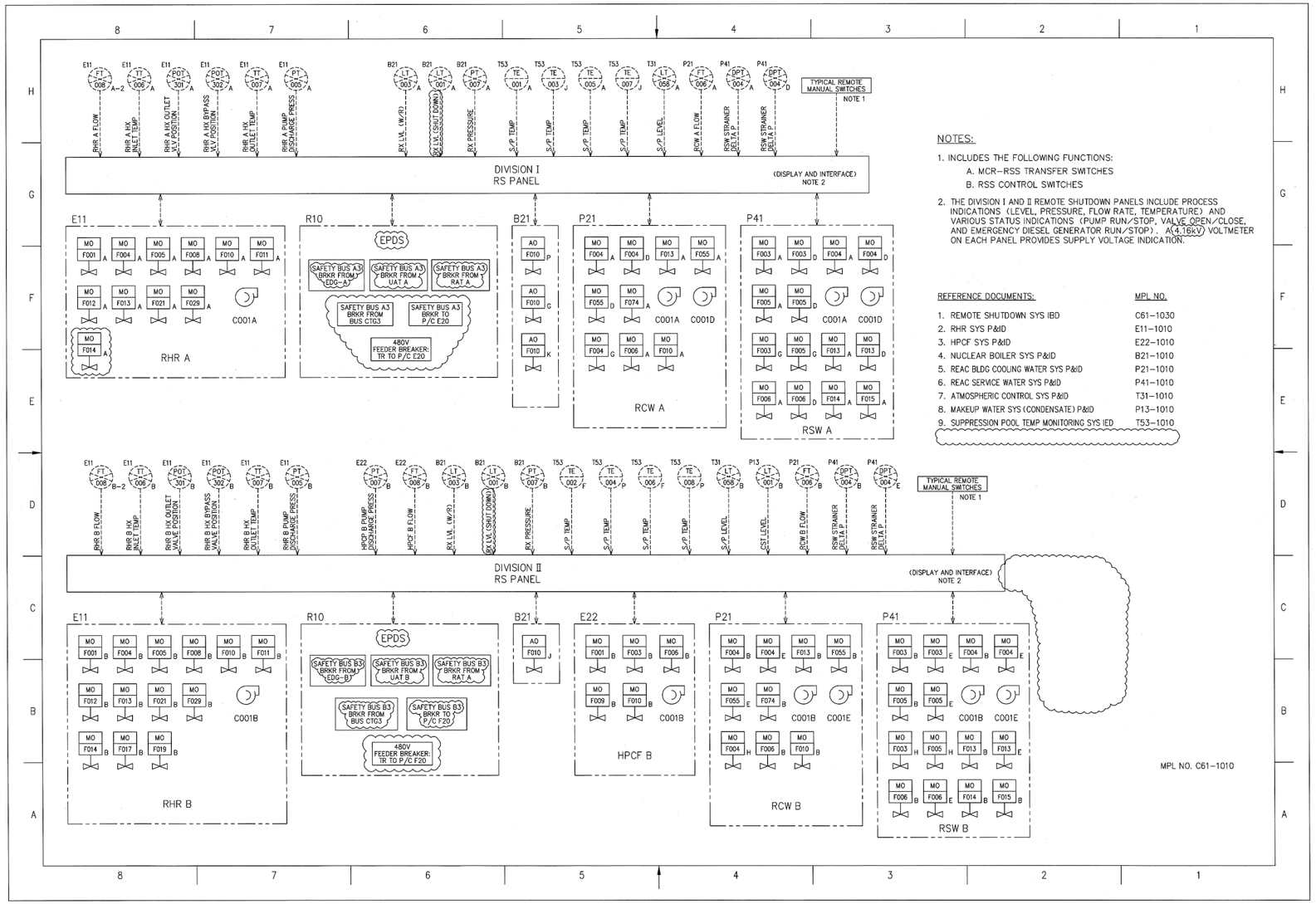

NOTES:

1. INCLUDES THE FOLLOWING FUNCTIONS:
   A. MCR–RSS TRANSFER SWITCHES
   B. RSS CONTROL SWITCHES
2. THE DIVISION I AND II REMOTE SHUTDOWN PANELS INCLUDE PROCESS INDICATIONS (LEVEL, PRESSURE, FLOW RATE, TEMPERATURE) AND VARIOUS STATUS INDICATIONS (PUMP RUN/STOP, VALVE OPEN/CLOSE, AND EMERGENCY DIESEL GENERATOR RUN/STOP). A 4.16kV VOLTMETER ON EACH PANEL PROVIDES SUPPLY VOLTAGE INDICATION.

REFERENCE DOCUMENTS:	MPL NO.
1. REMOTE SHUTDOWN SYS IBD	C61–1030
2. RHR SYS P&ID	E11–1010
3. HPCF SYS P&ID	E22–1010
4. NUCLEAR BOILER SYS P&ID	B21–1010
5. REAC BLDG COOLING WATER SYS P&ID	P21–1010
6. REAC SERVICE WATER SYS P&ID	P41–1010
7. ATMOSPHERIC CONTROL SYS P&ID	T31–1010
8. MAKEUP WATER SYS (CONDENSATE) P&ID	P13–1010
9. SUPPRESSION POOL TEMP MONITORING SYS IED	T53–1010

Figure 7.4-2 – Remote Shutdown System IED (Sheet 1 of 1)

NOTES:

1. MOTOR OPERATED VALVE CONTROL LOGIC ON SHEETS 6 AND 8 APPLIES TO MANY VALVES AS TABULATED ON SHEETS 2 AND 3. INTERFACE INFORMATION IS AVAILABLE FROM APPLICABLE REFERENCE DOCUMENTS LISTED ON SHEET 1.

REFERENCE DOCUMENT	MPL NO.
1. REMOTE SHUTDOWN SYS IED	C61–1010
2. RESIDUAL HEAT REMOVAL SYS IBD	E11–1030
3. HIGH PRESS CORE FLOODER SYS IBD	E22–1030
4. REAC BLDG COOLING WATER SYS/ REACTOR SERVICE WATER SYS IBD	P21/P41–1030
5. NUCLEAR BOILER SYS IBD	B21–1030
7. (13.8kV/4.16kV) POWER DISTRIBUTION SINGLE LINE DIAG	R10–1010
8. MAKEUP WATER SYSTEM (CONDENSATE) P&ID	P13–1010
9. ATMOSPHERIC CONTROL SYSTEM P&ID	T31–1010
10. RESIDUAL HEAT REMOVAL SYSTEM P&ID	E11–1010
11. HIGH PRESSURE CORE FLOODER SYSTEM P&ID	E22–1010
12. NUCLEAR BOILER SYSTEM P&ID	B21–1010
13. INTERLOCK BLOCK DIAGRAM (BD) STANDARDS	A10–3070

LEGEND:

MCR = MAIN CONTROL ROOM
RSP = REMOTE SHUTDOWN CONTROL PANEL
RSTS = REMOTE SHUTDOWN TRANSFER SWITCH
RSCS = REMOTE SHUTDOWN CONTROL SWITCH

MPL NO. C61–1030

Figure 7.4-3 – Remote Shutdown System IBD (Sheet 1 of 27)

SYS	NAME	SH NO.	PART NO.
RHR	RHR PUMP (A)	SH 14	E11-C001A
	RHR S/P SUCTION VALVE (A)	SH 7	E11-F001A
	RHR HX BYPASS VALVE (A)	SH 6	E11-F013A
	RHR INJECTION VALVE (A)	SH 15	E11-F005A
	RHR HX OUTLET VALVE (A)	SH 6	E11-F004A
	RHR S/P RETURN VALVE (A)	SH 16	E11-F008A
	RHR SHC (INBOARD) SUCTION ISOL VALVE (A)	SH 21	E11-F010A
	RHR SHC (OUTBOARD) SUCTION ISOL VALVE (A)	SH 22	E11-F011A
	RHR SHC SUCTION VALVE (A)	SH 17	E11-F012A
	RHR MINIMUM FLOW VALVE (A)	SH 12	E11-F021A
	RHR LIQUID WASTE FLUSH ISOLATION VALVE (A)	SH 8	E11-F029A
	RHR PUMP (B)	SH 14	E11-C001B
	RHR S/P SUCTION VALVE (B)	SH 7	E11-F001B
	RHR HX BYPASS VALVE (B)	SH 6	E11-F013B
	RHR INJECTION VALVE (B)	SH 15	E11-F005B
	RHR HX OUTLET VALVE (B)	SH 6	E11-F004B
	RHR D/W SPRAY VALVE (B)	SH 8	E11-F017B
	RHR WW SPRAY VALVE (B)	SH 25	E11-F019B
	RHR S/P RETURN VALVE (B)	SH 16	E11-F008B
	RHR SHC (INBOARD) SUCTION ISOL VALVE (B)	SH 23	E11-F010B
	RHR SHC (OUTBOARD) SUCTION ISOL VALVE (B)	SH 24	E11-F011B
	RHR SHC SUCTION VALVE (B)	SH 18	E11-F012B
	RHR MINIMUM FLOW VALVE (B)	SH 12	E11-F021B
	RHR LIQUID WASTE FLUSH ISOLATION VALVE (B)	SH 8	E11-F029B
	RHR-FPC ISOLATION VALVE (B)	SH 8	E11-F014B
	RHR-FPC ISOLATION VALVE (A)	SH 8	E11-F014A

SYS	NAME	SH NO.	PART NO.
HPCF	HPCF PUMP (B)	SH 19	E22-C001B
	HPCF CST SUCTION VALVE (B)	SH 6	E22-F001B
	HPCF INJECTION VALVE (B)	SH 6	E22-F003B
	HPCF S/P SUCTION VALVE (B)	SH 20	E22-F006B
	HPCF TEST LINE BYPASS VALVE (B)	SH 8	E22-F009B
	HPCF MINIMUM FLOW VALVE (B)	SH 13	E22-F010B
NBS	SAFETY RELIEF VALVE (NON ADS)	SH 9	B21-F010P
	SAFETY RELIEF VALVE (NON ADS)	SH 9	B21-F010G
	SAFETY RELIEF VALVE (NON ADS)	SH 9	B21-F010K
	SAFETY RELIEF VALVE (NON ADS)	SH 9	B21-F010J
RCW	RCW PUMP (A)	SH 5	P21-C001A
	RCW PUMP (D)	SH 5	P21-C001D
	RCW HX COOLING WATER OUTLET VALVE (A)	SH 6	P21-F004A
	RCW HX COOLING WATER OUTLET VALVE (D)	SH 6	P21-F004D
	RCW HX COOLING WATER OUTLET VALVE (G)	SH 6	P21-F004G
	RCW RHR HX OUTLET VALVE (A)	SH 6	P21-F013A
	RCW D/G OUTLET VALVE (A)	SH 6	P21-F055A
	RCW D/G OUTLET VALVE (D)	SH 6	P21-F055D
	RCW SEPARATE VALVE (A)	SH 6	P21-F074A
	RCW PUMP (B)	SH 5	P21-C001B
	RCW PUMP (E)	SH 5	P21-C001E
	RCW HX COOLING WATER OUTLET VALVE (B)	SH 6	P21-F004B
	RCW HX COOLING WATER OUTLET VALVE (E)	SH 6	P21-F004E
	RCW HX COOLING WATER OUTLET VALVE (H)	SH 6	P21-F004H
	RCW RHR HX OUTLET VALVE (B)	SH 6	P21-F013B
	RCW D/G OUTLET VALVE (B)	SH 6	P21-F055B
	RCW D/G OUTLET VALVE (E)	SH 6	P21-F055E
	RCW SEPARATE VALVE (B)	SH 6	P21-F074B
	RCW COOLING WATER TEMPERATURE CONTROL VALVES	SH 27	P21-F006A(B) P21-F010A(B)

Figure 7.4-3 – Remote Shutdown System IBD (Sheet 2 of 27)

SYS	NAME	SH NO.	PART NO.
RSW	RSW PUMP (A)	SH 5	P41-C001A
	RSW PUMP (D)	SH 5	P41-C001D
	RCW HX SERVICE WATER INLET VALVE (A)	SH 6	P41-F003A
	RCW HX SERVICE WATER INLET VALVE (D)	SH 6	P41-F003D
	RSW STRAINER INLET VALVE (A)	SH 26	P41-F004A
	RSW STRAINER INLET VALVE (D)	SH 26	P41-F004D
	RCW HX SERVICE WATER OUTLET VALVE (A)	SH 6	P41-F005A
	RCW HX SERVICE WATER OUTLET VALVE (D)	SH 6	P41-F005D
	RCW HX SERVICE WATER INLET VALVE (G)	SH 6	P41-F003G
	RCW HX SERVICE WATER OUTLET VALVE (G)	SH 6	P41-F005G
	RSW STRAINER OUTLET VALVE (A)	SH 6	P41-F013A
	RSW STRAINER OUTLET VALVE (D)	SH 6	P41-F013D
	RSW STRAINER BACKWASH VALVE (A)	SH 6	P41-F006A
	RSW STRAINER BACKWASH VALVE (D)	SH 6	P41-F006D
	RSW (A) SUPPLY VALVE	SH 6	P41-F014A
	RSW (A) RETURN VALVE	SH 6	P41-F015A
	RSW PUMP (B)	SH 5	P41-C001B
	RSW PUMP (E)	SH 5	P41-C001E
	RCW HX SERVICE WATER INLET VALVE (B)	SH 6	P41-F003B
	RCW HX SERVICE WATER INLET VALVE (E)	SH 6	P41-F003E
	RSW STRAINER INLET VALVE (B)	SH 26	P41-F004B
	RSW STRAINER INLET VALVE (E)	SH 26	P41-F004E
	RCW HX SERVICE WATER OUTLET VALVE (B)	SH 6	P41-F005B
	RCW HX SERVICE WATER OUTLET VALVE (E)	SH 6	P41-F005E
	RCW HX SERVICE WATER INLET VALVE (H)	SH 6	P41-F003H
	RCW HX SERVICE WATER OUTLET VALVE (H)	SH 6	P41-F005H
	RSW STRAINER OUTLET VALVE (B)	SH 6	P41-F013B
	RSW STRAINER OUTLET VALVE (E)	SH 6	P41-F013E
	RSW STRAINER BACKWASH VALVE (B)	SH 6	P41-F006B
	RSW STRAINER BACKWASH VALVE (E)	SH 6	P41-F006E
	RSW (B) SUPPLY VALVE	SH 6	P41-F014B
	RSW (B) RETURN VALVE	SH 6	P41-F015B

SYS	NAME	SH NO.	PART NO.
D/G	DIESEL GENERATOR A START-UP CIRCUIT	SH 11	–
	DIESEL GENERATOR B START-UP CIRCUIT	SH 11	–

EPDS	SAFETY BUS A3 BREAKER FROM UAT A	SH 10	–
	SAFETY BUS A3 BREAKER FROM RAT A	SH 10	–
	SAFETY BUS A3 BREAKER FROM EDG-A	SH 10	–
	SAFETY BUS A3 BREAKER FROM BUS CTG3	SH 10	–
	SAFETY BUS A3 BREAKER TO P/C E20	SH 10	–
	480V FEEDER BREAKER : TR TO P/C E20	SH 10	–
	SAFETY BUS B3 BREAKER FROM UAT B	SH 10	–
	SAFETY BUS B3 BREAKER FROM RAT A	SH 10	–
	SAFETY BUS B3 BREAKER FROM EDG-B	SH 10	–
	SAFETY BUS B3 BREAKER FROM BUS CTG3	SH 10	–
	SAFETY BUS B3 BREAKER TO P/C F20	SH 10	–
	480V FEEDER BREAKER : TR TO P/C F20	SH 10	–

Figure 7.4-3 – Remote Shutdown System IBD (Sheet 3 of 27)