NOTES:

1. ALL EQUIPMENT AND INSTRUMENT PREFIXED BY SYSTEM NO. E51– UNLESS OTHERWISE NOTED.
2. DIVISIONAL SIGNALS TO ANNUNCIATORS SHALL BE ISOLATED FROM NON–IE ALARM.
3. THE POWER TO CONTROL LOGIC AND TO THE MOTOR OPERATED F036 VALVE SHALL BE SUPPLIED FROM DIVISION 2 POWER.
4. THE LOGIC DESIGN SHALL INCORPORATE PROVISIONS TO REVERT 2/4 LOGIC TO 2/3 LOGIC DURING BYPASS OF A SINGLE DIVISION OF SENSORS. ALSO, THE LOGIC DESIGN SHALL NOT PERMIT THE BYPASS OF MORE THAN ONE DIVISION OF SENSORS AT A TIME.
5. SETPOINT VALVE IS NOT SUBJECT TO APPROVAL OF THIS DOCUMENT.
6. POWER SUPPLY SHALL BE DIVISION 1 UNLESS OTHERWISE SPECIFIED.
7. THE INBOARD CONTAINMENT ISOLATION VALVE F035 MANUAL CONTROL AND VALVE POSITION STATUS INDICATION (IN ADDITION TO ESSENTIAL COMMUNICATION FUNCTION(ECF)) SHALL BE HARDWIRED TO THE MAIN CONTROL ROOM.

REFERENCE DOCUMENTS UNDER THE FOLLOWING IDENTITIES SHALL BE USED IN CONJUNCTION WITH THIS DRAWING.

		MPL NO.
1.	MAKEUP WATER CONDENSATE SYSTEM IBD	P13–1030
2.	RCIC SYSTEM P&ID	E51–1010
3.	NUCLEAR BOILER SYSTEM P&ID	B21–1010
4.	LEAK DETECTION & ISOLATION SYSTEM IBD	E31–1030
5.	ATMOSPHERIC CONTROL SYSTEM IBD	T31–1030

SH NO.	TITLE
1	COVER/CONTENTS/NOTES
2	TABLE 1: ANNUNCIATOR/ALARM LIST
3	RCIC INITIATION LOGIC
4	RCIC AUTO SHUTDOWN
4	LEAK DETECTION ISOLATION
5	DRAIN POT SYSTEM ISOLATION VALVE F040
5	STEAM INLET TRAP BYPASS VALVE F058
5	DRAIN POT SYSTEM ISOLATION VALVE F041
7	TESTABLE CHECK VALVE F005 AND EQUALIZING VALVE F026
8	INJECTION VALVE F004
8	MINIMUM FLOW BYPASS TO SUPPRESSION POOL VALVE F011
9	CONDENSATE STORAGE TANK SUCTION VALVE F001
9	SUPPRESSION POOL SUCTION VALVE F006
10	STEAM SUPPLY TO TURBINE VALVE F037
11	TEST BYPASS TO SUPPRESSION POOL VALVE F008
11	TEST BYPASS TO SUPPRESSION POOL VALVE F009

SH NO.	TITLE
12	STEAM SUPPLY LINE INBOARD ISOL VALVE F035
12	STEAM SUPPLY LINE OUTBOARD ISOL VALVE F036
12	TURBINE EXHAUST TO SUPPRESSION POOL VALVE F039
13	STEAM LINE WARM UP VALVE F048
14	TURBINE TRIP & THROTTLE VALVE
15	THERMAL OVERLOAD RELAY BYPASS
15	TABLE 2: LIST OF EQUIPMENT WITH THERMAL OVERLOAD RELAY BYPASS
16	TURBINE EXHAUST HIGH PRESS ISOLATION
16	RCIC OUT–OF–SERVICE ALARM
17	MISCELLANEOUS ALARMS

MPL NO. E51–1030

Figure 7.3-3 – Reactor Core Isolation Cooling System IBD (Sheet 1 of 17)

TABLE 1: ANNUNCIATOR/ALARM LIST

INDICATOR	FUNCTION	INITIATING DEVICE
ALARMS		
	RCIC TURBINE EXHAUST PRESSURE HIGH	PIS-Z614A,E,B,F
	RCIC TURBINE EXHAUST LINE DISCHARGE PRESSURE HIGH	PIS-Z613A,E
	RCIC PUMP SUCTION PRESSURE HIGH	PIS-Z601
	RCIC PUMP SUCTION PRESSURE LOW	PIS-Z602
	RCIC AREA TEMP HIGH	E31-PS Z605A,B,C,D
	RCIC STEAM LINE FLOW HIGH	E31-FS Z606A,B,C,D
	RCIC STEAMLINE PRESSURE LOW	E31-PS Z607A,B,C,D
	RCIC ISOLATED	E31 LOGIC OUTPUT
	STEAM SUPPLY WARM-UP VALVE F048 NOT FULLY CLOSED	LIMIT SWITCH
	STEAM SUPPLY OUTBOARD ISOLATION VALVE F036 NOT FULLY OPENED	LIMIT SWITCH
	STEAM SUPPLY INBOARD ISOLATION VALVE F035 NOT FULLY OPENED	LIMIT SWITCH
	RCIC TURBINE EXHAUST VALVE F039 NOT FULLY OPENED	LIMIT SWITCH
	RCIC TURBINE INLET STEAM LINE WATER DRAIN POT LEVEL HIGH	LS011
	RCIC DISCHARGE LINE NOT FILLED	PIS-Z608
	CONDENSATE STORAGE TANK TO SUPPRESSION POOL SUCTION AUTO TRANSFER OVERRIDE	KOS
	SUPPRESSION POOL WATER TEMPERATURE HIGH	TIS-Z604

TABLE 1 (CONT'D) ANNUNCIATOR/ALARM LIST

INDICATOR	FUNCTION	INITIATING DEVICE
ALARMS		
	RCIC MANUAL INITIATION SWITCH IN ARMED POSITION	PBS
	RCIC OUT OF SERVICE	COS LOGIC OUTPUT
	RCIC LOW FLOW	FIS-Z607
	RCIC TURBINE TRIP AND THROTTLE VALVE NOT FULLY OPENED	LIMIT SWITCH
	SUPPRESSION POOL WATER LEVEL HIGH	LOGIC OUTPUT
	CONDENSATE STORAGE TANK WATER LEVEL LOW	LOGIC OUTPUT
	RCIC TEST	COS
	RPV WATER LEVEL LOW (L2)	LOGIC OUTPUT
	DRYWELL PRESSURE HIGH	LOGIC OUTPUT
	RCIC INITIATION SIGNAL	LOGIC OUTPUT
	RPV WATER LEVEL HIGH (L8)	LOGIC OUTPUT
	ANY RCIC VALVE OVERLOAD OR POWER LOSS	MCC
	RCIC LOGIC POWER FAILURE	LOGIC OUTPUT
	STEAM SUPPLY TO TURBINE VALVE F037 CLOSED ON HIGH WATER LEVEL (L8)	LIMIT SWITCH, LOGIC OUTPUT
	THERMAL OVERLOAD RELAY BYPASS CONTROL SWITCH IN "TEST"	KOS

Figure 7.3-3 – Reactor Core Isolation Cooling System IBD (Sheet 2 of 17)

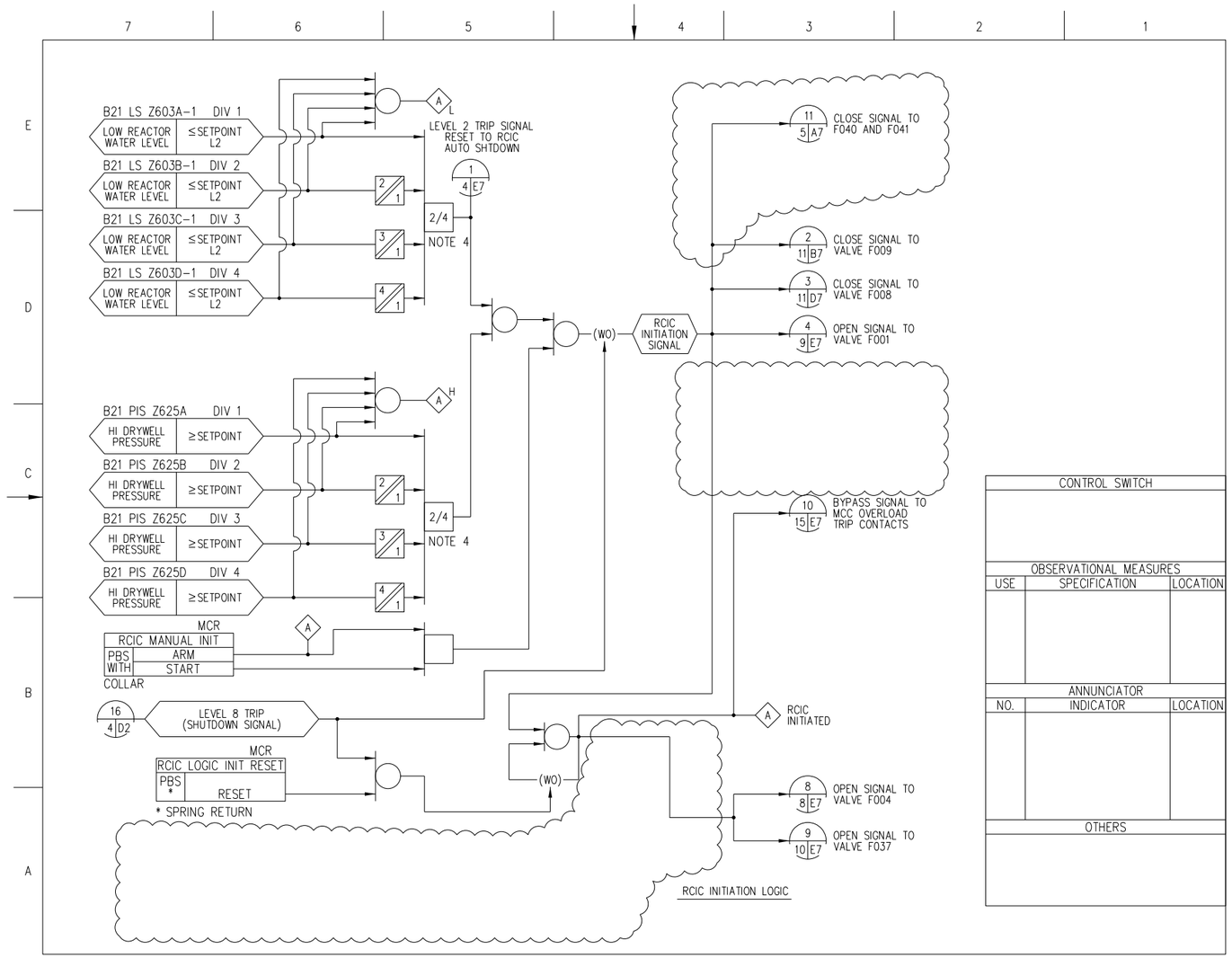

Figure 7.3-3 – Reactor Core Isolation Cooling System IBD (Sheet 3 of 17)

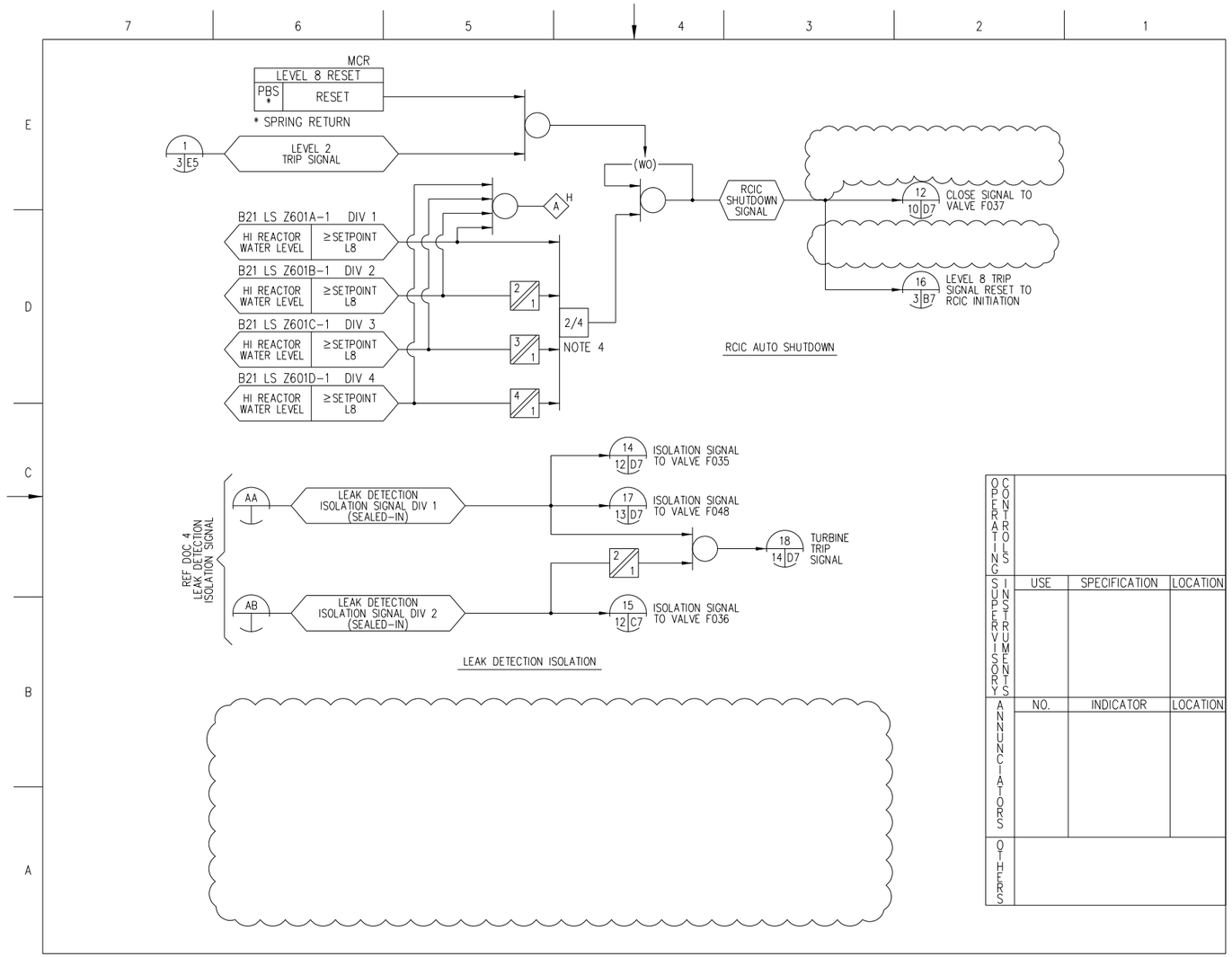

Figure 7.3-3 – Reactor Core Isolation Cooling System IBD (Sheet 4 of 17)

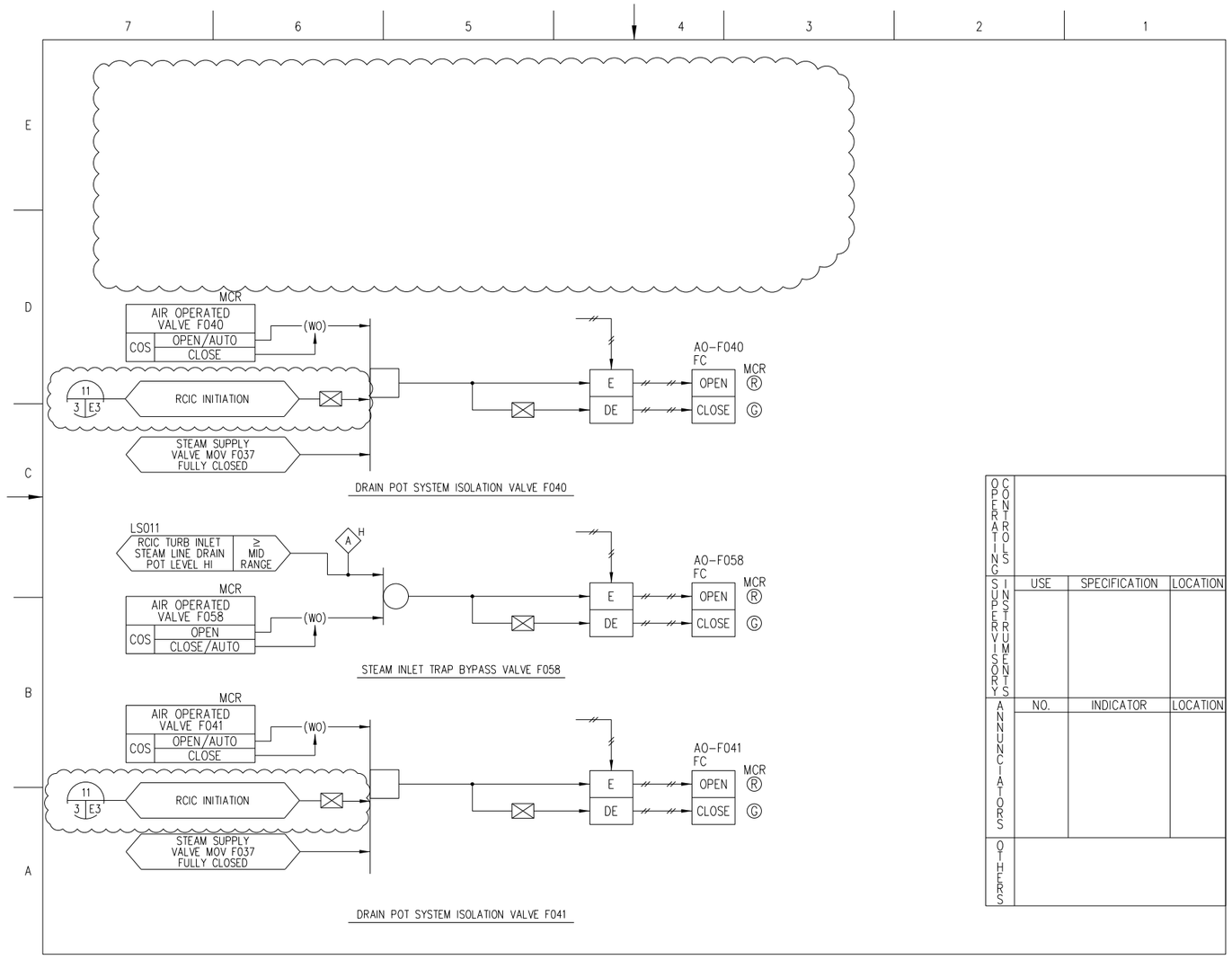

Figure 7.3-3 – Reactor Core Isolation Cooling System IBD (Sheet 5 of 17)

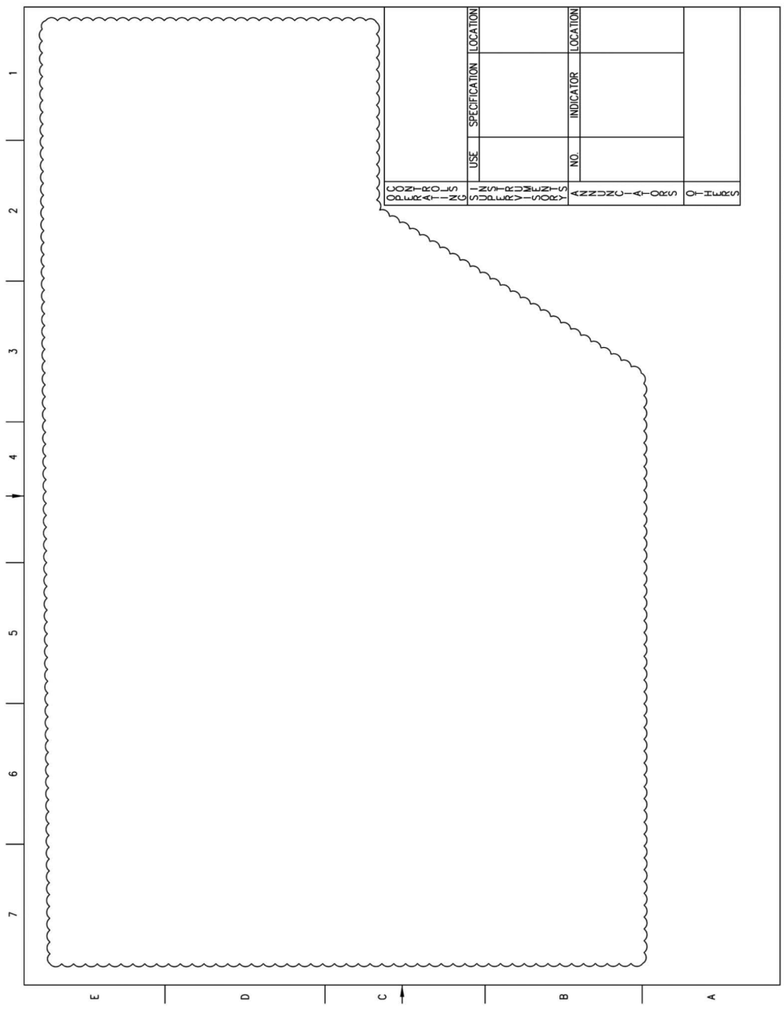

Figure 7.3-3 – Reactor Core Isolation Cooling System IBD (Sheet 6 of 17)

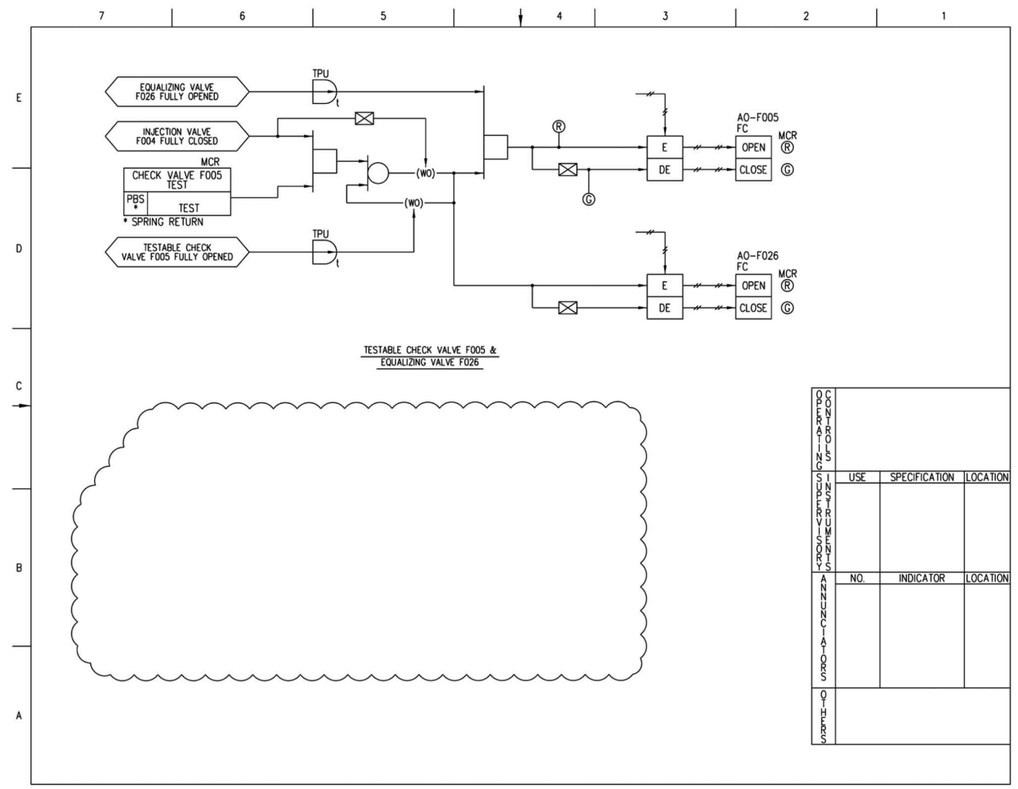

Figure 7.3-3 – Reactor Core Isolation Cooling System IBD (Sheet 7 of 17)

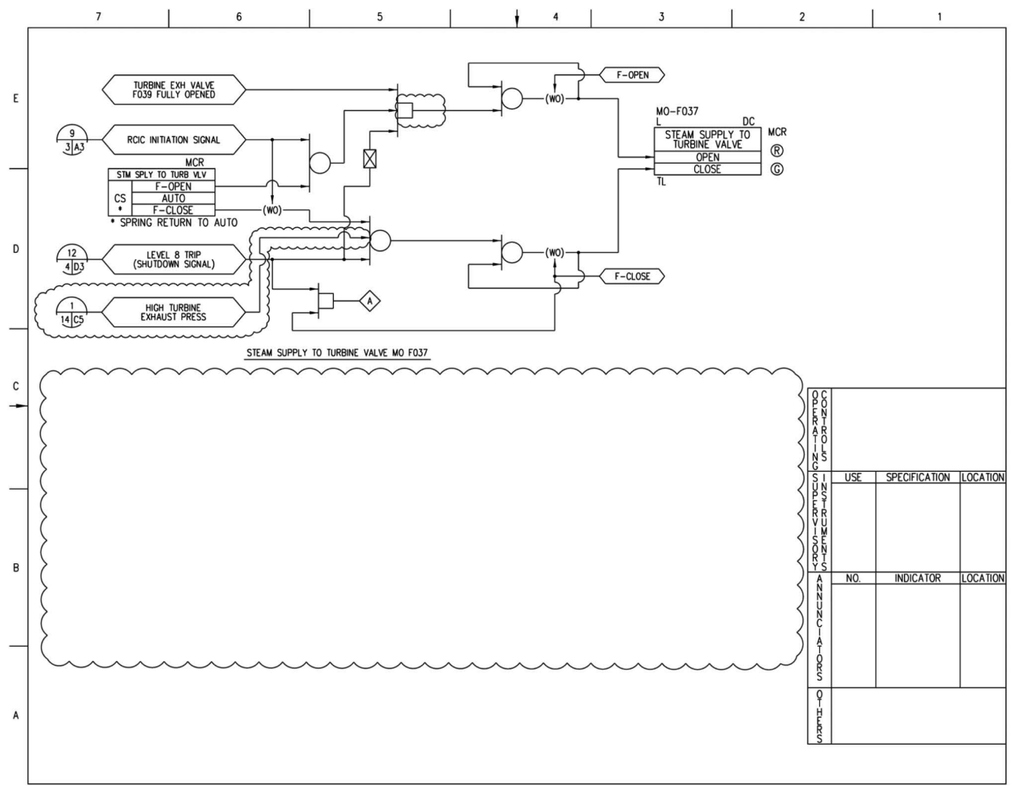

Figure 7.3-3 – Reactor Core Isolation Cooling System IBD (Sheet 10 of 17)

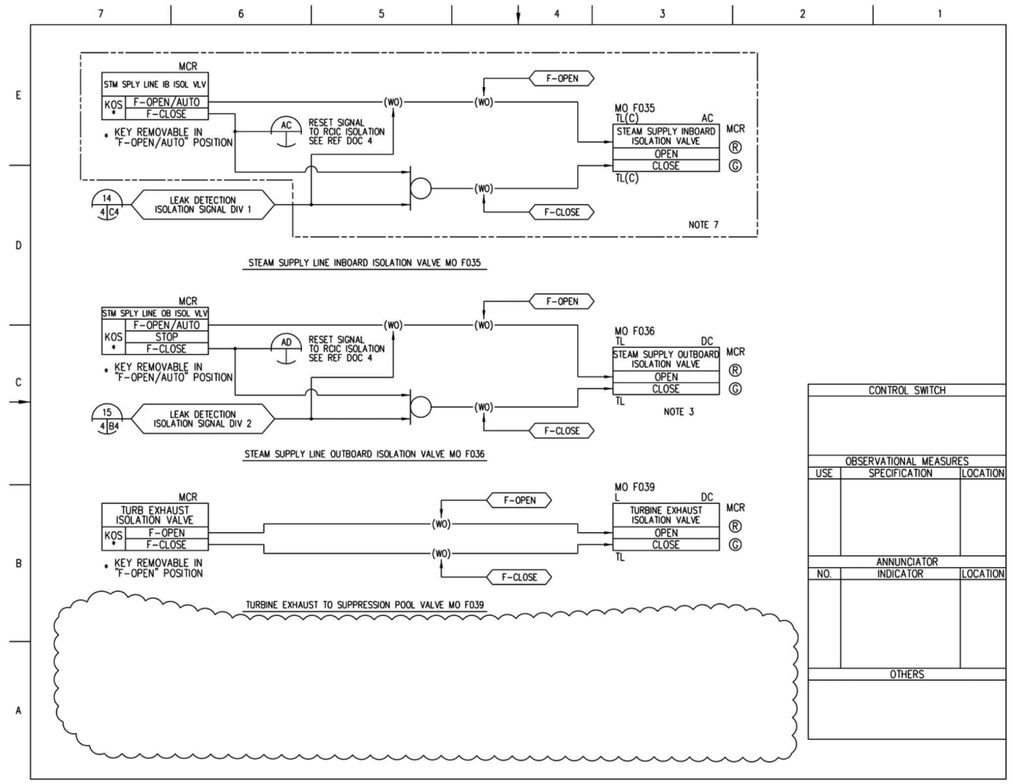

Figure 7.3-3 – Reactor Core Isolation Cooling System IBD (Sheet 12 of 17)

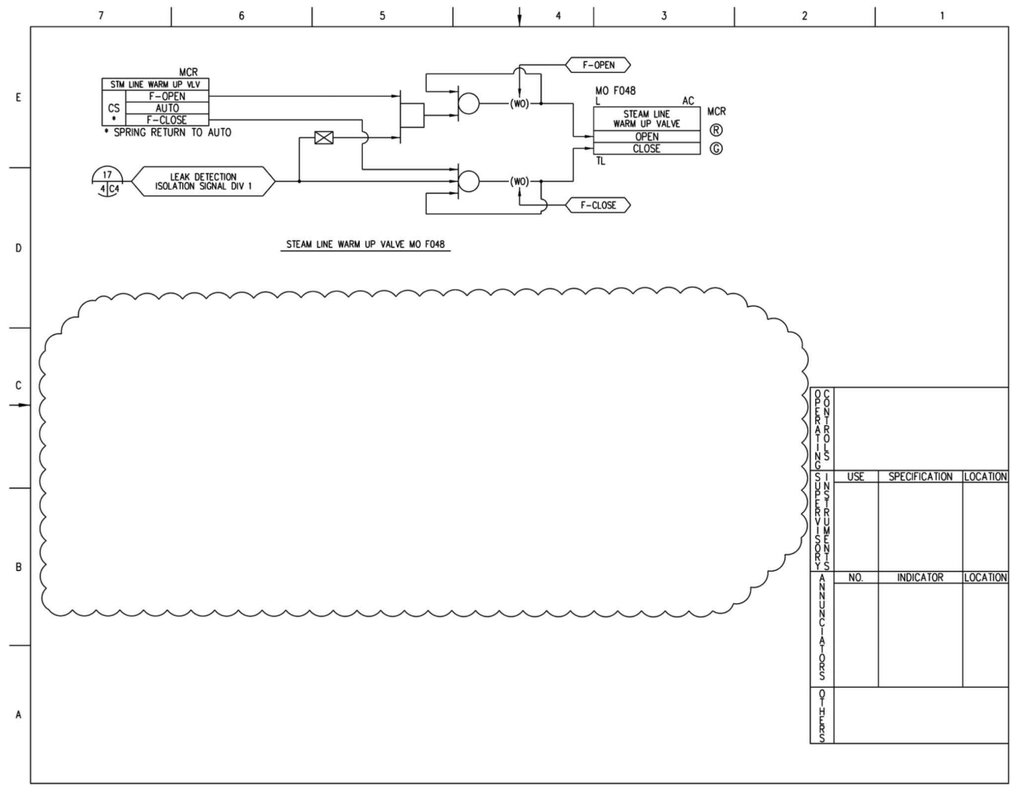

Figure 7.3-3 – Reactor Core Isolation Cooling System IBD (Sheet 13 of 17)

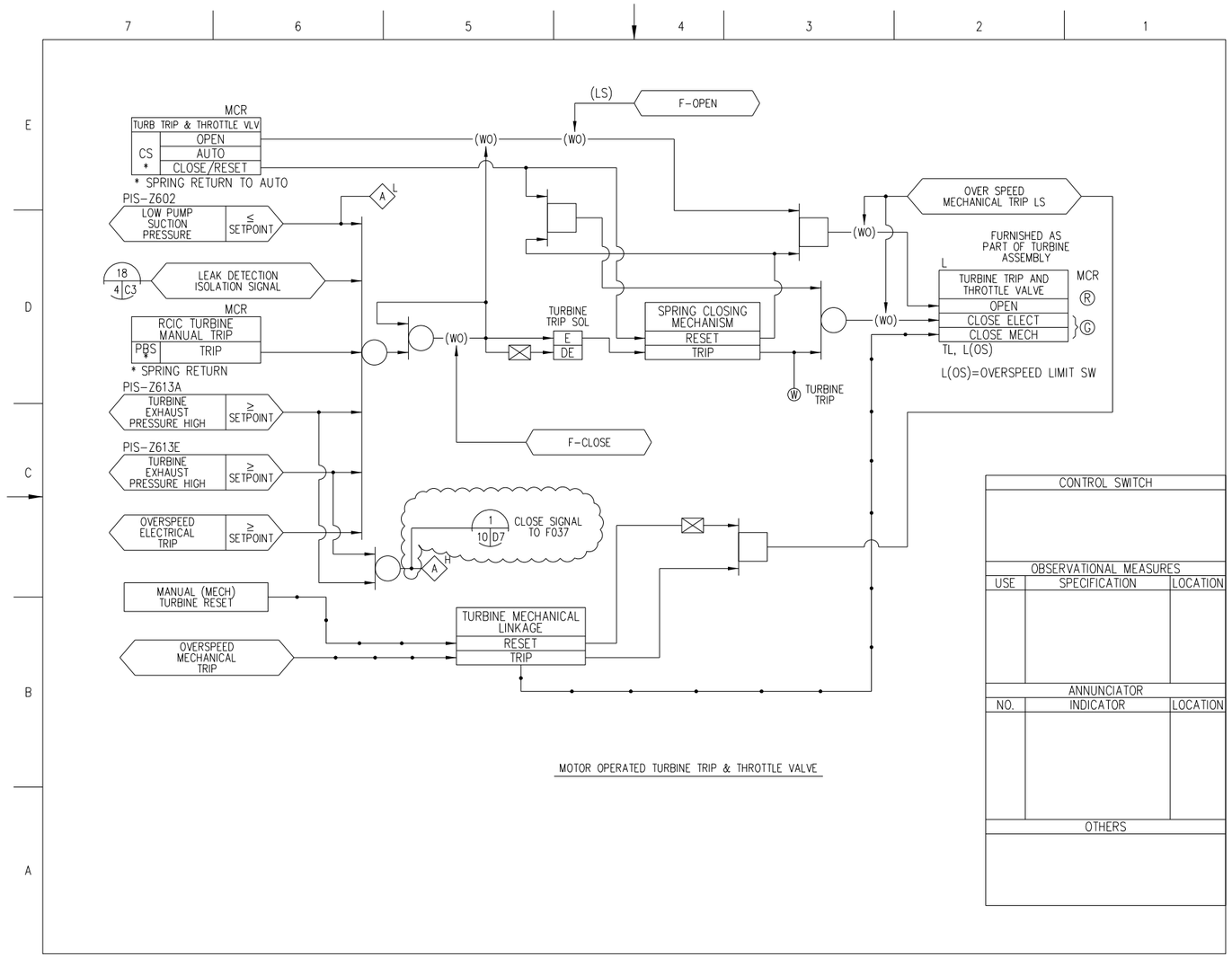

Figure 7.3-3 – Reactor Core Isolation Cooling System IBD (Sheet 14 of 17)

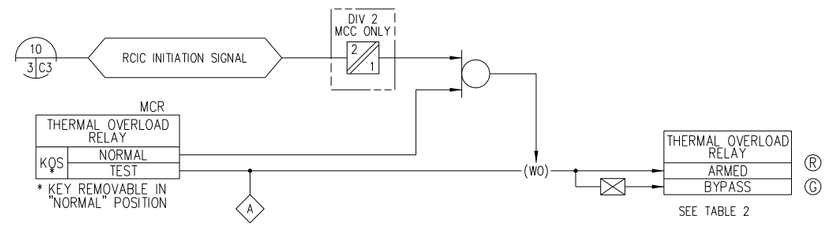

MOTOR CONTROL CENTER THERMAL OVERLOAD RELAY BYPASS
(TYPICAL FOR DIV 2 MCC EXCEPT AS NOTED)

TABLE 2: LIST OF EQUIPMENT WITH THERMAL OVERLOAD RELAY BYPASS

SYSTEM	VALVE NO.	NAME	POWER SUPPLY
RCIC	E51–F001	CST SUCTION VALVE	DIV 1 DC
RCIC	E51–F004	INJECTION VALVE	DIV 1 DC
RCIC	E51–F006	S/P SUCTION VALVE	DIV 1 DC
RCIC	E51–F008	TEST RETURN VALVE	DIV 1 DC
RCIC	E51–F009	TEST RETURN VALVE	DIV 1 DC
RCIC	E51–F011	MINIMUM FLOW VALVE	DIV 1 DC
RCIC	E51–F035	STEAM SUPPLY INBOARD ISOL VALVE	DIV 1 DC
RCIC	E51–F036	STEAM SUPPLY OUTBOARD ISOL VALVE	DIV 2 DC
RCIC	E51–F037	STEAM SUPPLY VALVE	DIV 1 DC
RCIC	E51–F039	TURBINE EXHAUST VALVE	DIV 1 DC
RCIC	E51–F048	STEAM LINE WARM–UP VALVE	DIV 1 DC
RCIC	*	TURBINE TRIP AND THROTTLE VALVE	DIV 1 DC

* SUPPLIED WITH RCIC TURBINE, E51–C002

OPERATING CONTROLS			
SUPERVISORY INSTRUMENTS	USE	SPECIFICATION	LOCATION
ANNUNCIATORS	NO.	INDICATOR	LOCATION
OTHERS			

Figure 7.3-3 – Reactor Core Isolation Cooling System IBD (Sheet 15 of 17)

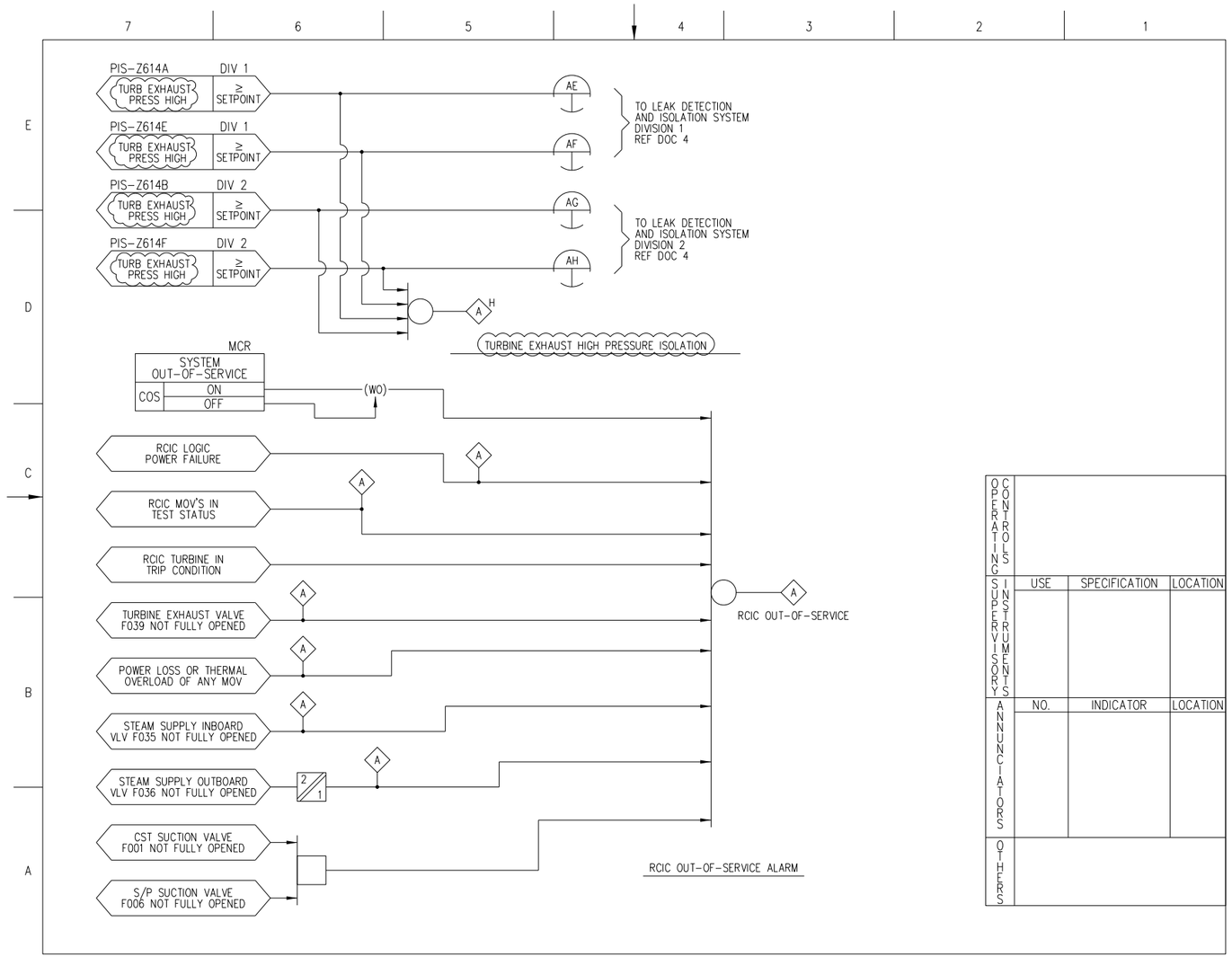

Figure 7.3-3 – Reactor Core Isolation Cooling System IBD (Sheet 16 of 17)

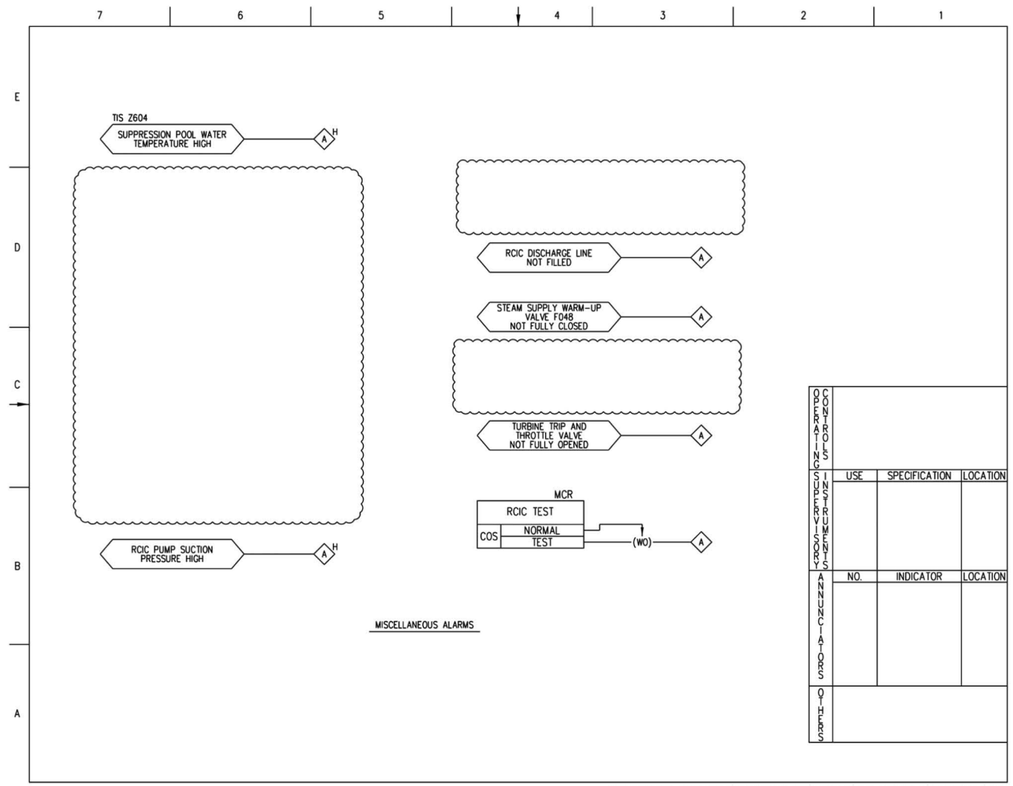

Figure 7.3-3 – Reactor Core Isolation Cooling System IBD (Sheet 17 of 17)

NOTES:

1. RHR LOOP "A" LOGIC IS SHOWN. RHR LOOP B, & C LOGIC IS IDENTICAL TO "A" EXCEPT AS NOTED.
2. ALL EQUIPMENT AND INSTRUMENTS ARE PREFIXED BY SYSTEM NUMBER E11 UNLESS OTHERWISE NOTED.
3. VALVES F011A, F011B AND F011C ARE IN ELECTRICAL DIVISION 2, 3 AND 1 RESPECTIVELY. THE MANUAL CONTROL SWITCH FOR VALVES F011A, F011B AND F011C ARE IN ELECTRICAL DIVISIONS 1, 2 AND 3 RESPECTIVELY.
4. SYSTEM R10, ELECTRICAL POWER DISTRIBUTION SYSTEM, SHALL PERMIT MOTOR TO START ONLY FOR PUMP VOLTAGE >70 PERCENT OF NOMINAL.
5. DIVISIONAL SIGNALS SHALL BE ISOLATED FROM THE NON-IE ALARM.
6. THE LOGIC DESIGN SHALL INCORPORATE PROVISIONS TO REVERT 2/4 LOGIC TO 2/3 LOGIC DURING BYPASS OF A SINGLE DIVISION OF SENSORS. ALSO, THE LOGIC DESIGN SHALL NOT PERMIT THE BYPASS OF MORE THAN ONE DIVISION OF SENSORS AT A TIME.
7. SETPOINT VALVES ARE PRELIMINARY AND WILL BE FINALIZED IN DETAILED DESIGN.
8. UNLESS OTHERWISE SPECIFIED, POWER AND CONTROL CIRCUITS ARE DIVISION 1, 2 AND 3 FOR LOOPS A, B AND C RESPECTIVELY.
9. THIS EQUIPMENT IS ALSO CONTROLLED BY REMOTE SHUTDOWN SYSTEM (REFERENCE DOCUMENT 11) FOR RHR LOOPS A AND B ONLY.
10. THE ELECTRICAL POWER DISTRIBUTION SYSTEM SHALL PROVIDE PUMP C001A,B,C STOP SIGNALS DUE TO BUS UNDER VOLTAGE (≤ 30% VOLTAGE) AND ANY OF THE FOLLOWING MOTOR PROTECTIVE RELAY TRIP SIGNALS:

    A. MOTOR OVERCURRENT
    B. BUS DIFFERENTIAL CURRENT
    C. GROUND OVERCURRENT

REFERENCE DOCUMENTS

		MPL NO.
1.	NUCLEAR BOILER SYSTEM P&ID	B21-1010
2.	SUPPRESSION POOL TEMPERATURE MONITORING SYSTEM IBD	T53-1030
3.	RHR SYSTEM P&ID	E11-1010
4.	LEAK DETECTION & ISOLATION SYSTEM IBD	E31-1030
5.	DELETED	
7.	NUCLEAR BOILER SYSTEM IBD	B21-1030
8.	REACTOR WATER CLEAN-UP SYSTEM IBD	G31-1030
9.	FUEL POOL COOLING SYSTEM IBD	G41-1030
10.	REACTOR BLDG COOLING WATER SYSTEM/ REACTOR SERVICE WATER SYSTEM IBD	P21/P41-1030
11.	REMOTE SHUTDOWN SYSTEM IBD	C61-1030
12.	CONTAINMENT ATMOSPHERE MONITORING SYSTEM IBD	D23-1030
13.	INTERLOCK BLOCK DIAGRAM (IBD) STANDARDS	A10-3070
14.	REACTOR BLDG COOLING WATER SYSTEM P&ID	P21-1010

Figure 7.3-4 – Residual Heat Removal System IBD (Sheet 1 of 20)

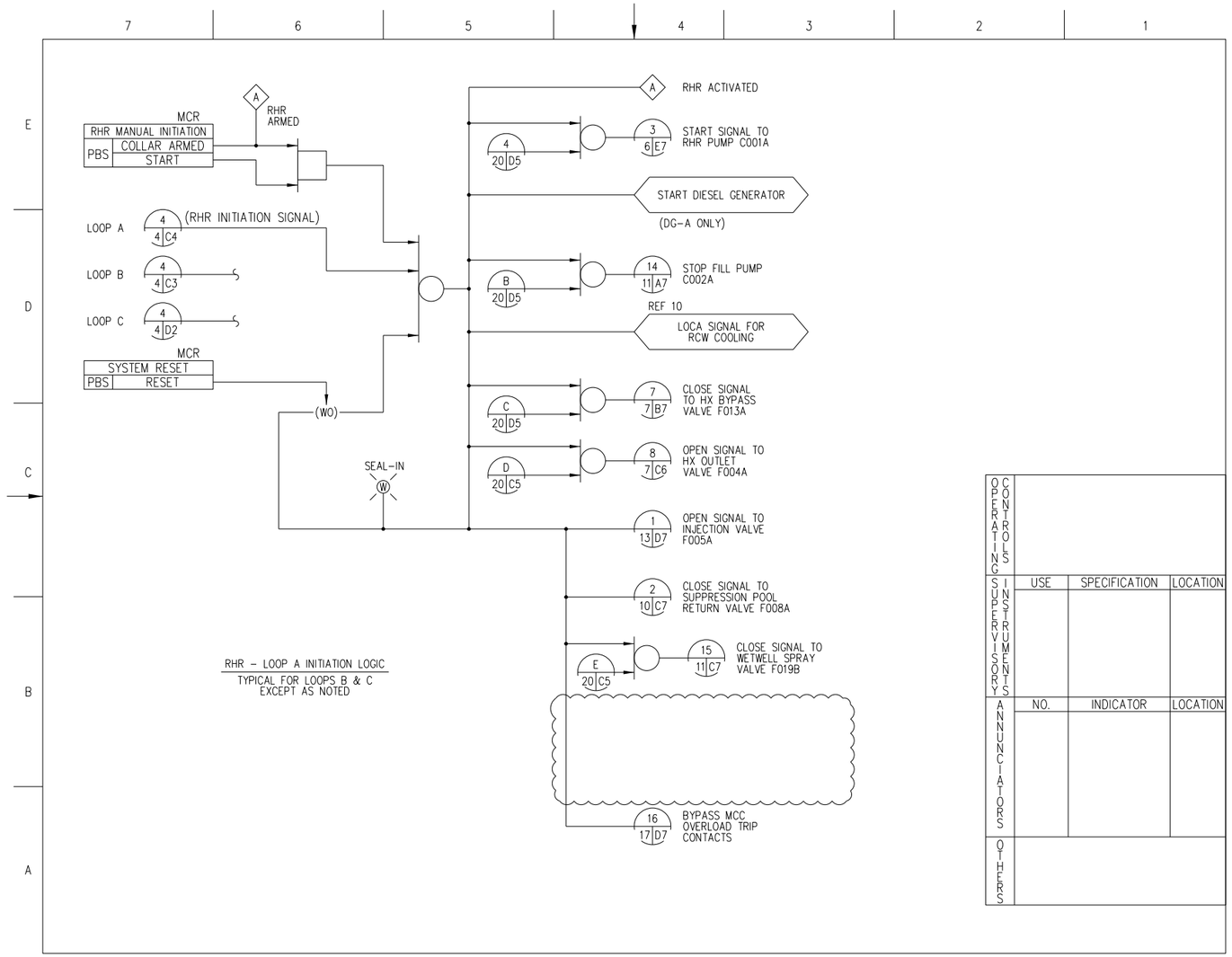

Figure 7.3-4 – Residual Heat Removal System IBD (Sheet 3 of 20)

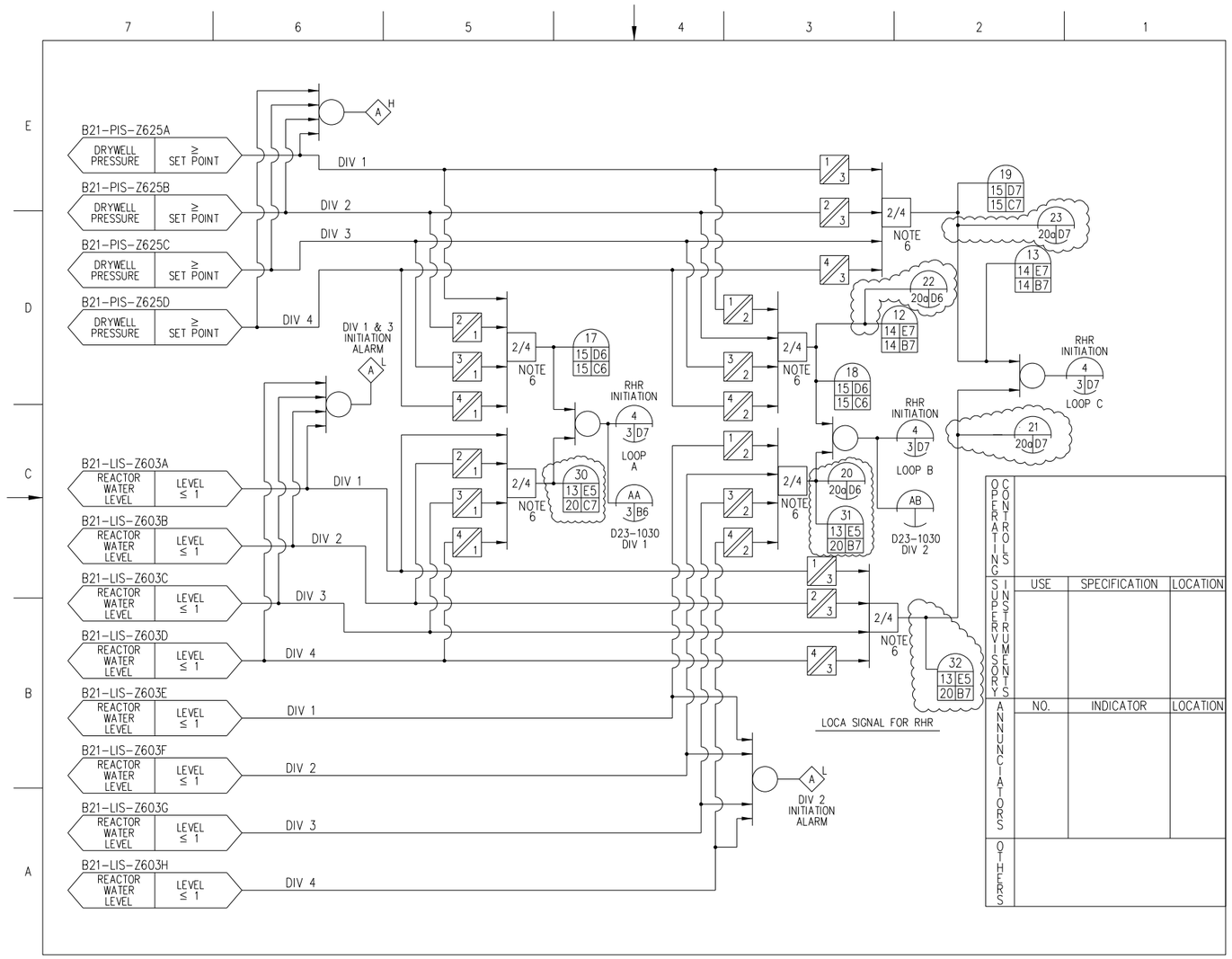

Figure 7.3-4 – Residual Heat Removal System IBD (Sheet 4 of 20)

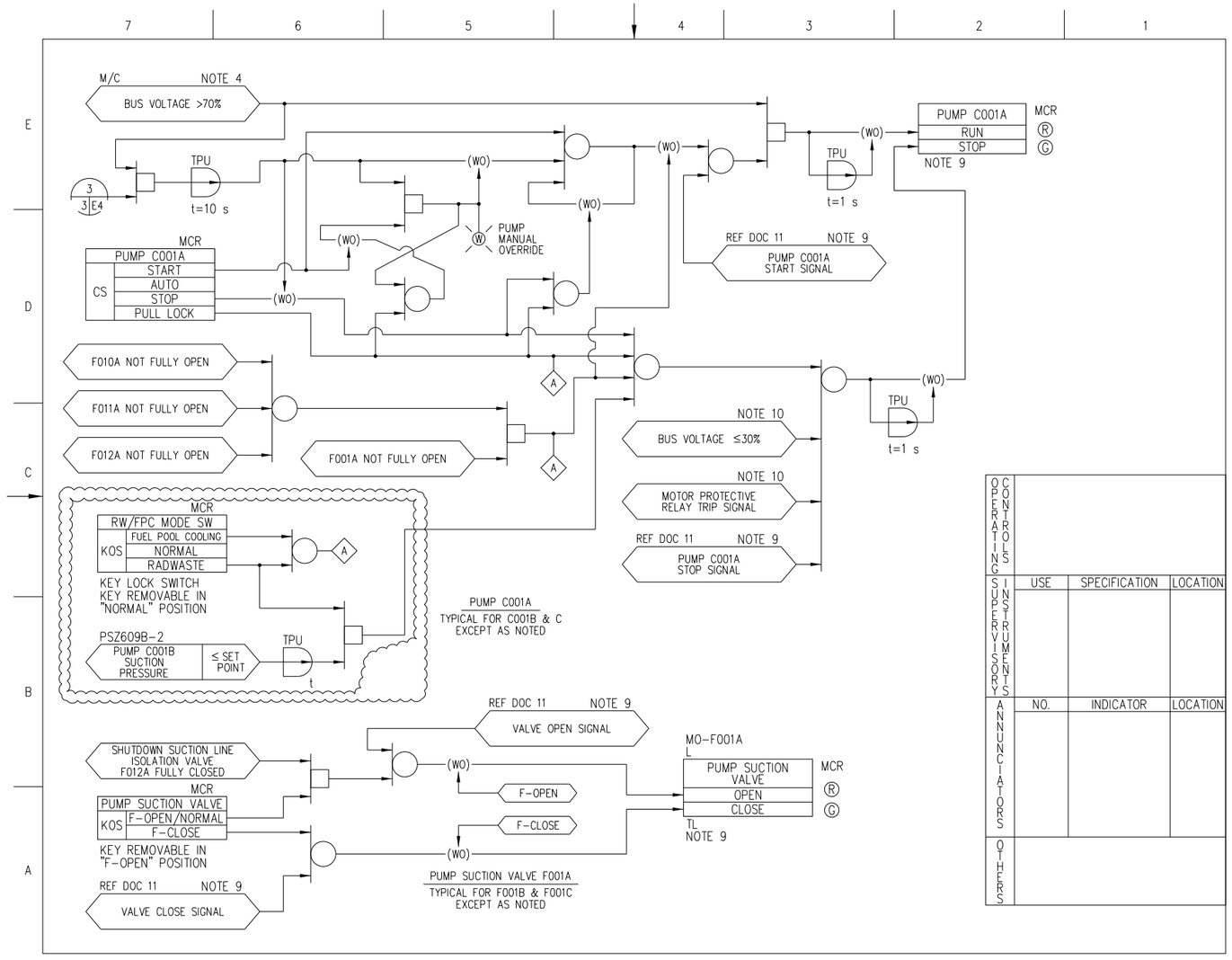

Figure 7.3-4 – Residual Heat Removal System IBD (Sheet 6 of 20)

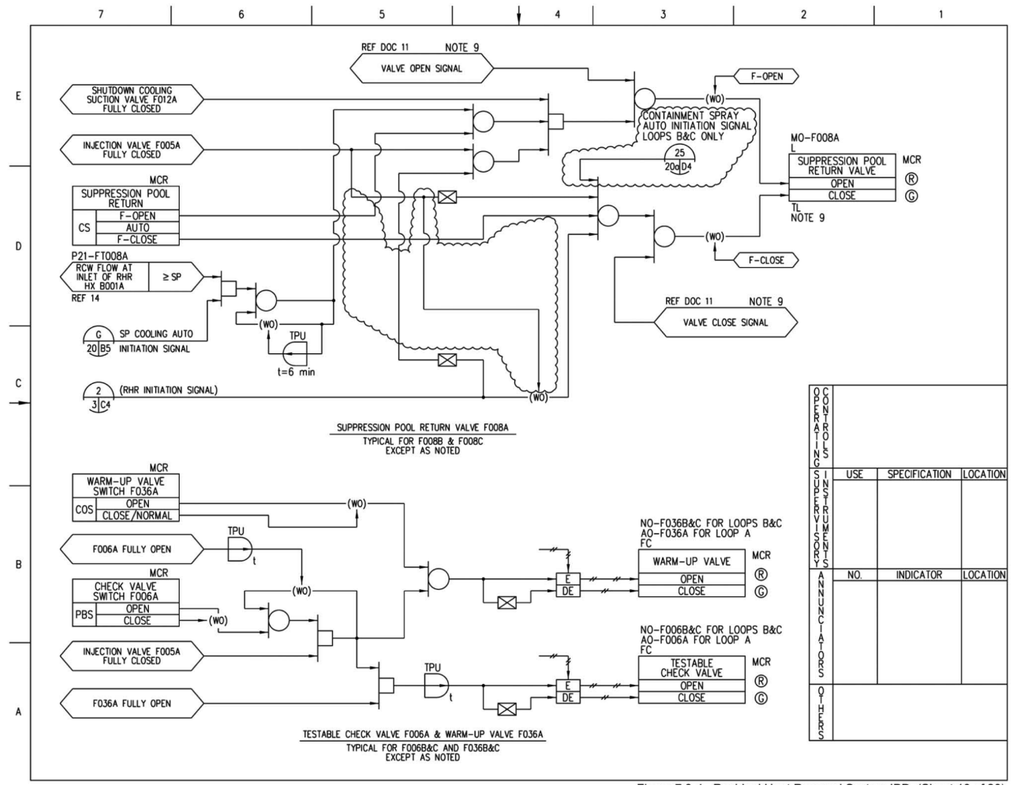

Figure 7.3-4 – Residual Heat Removal System IBD (Sheet 10 of 20)

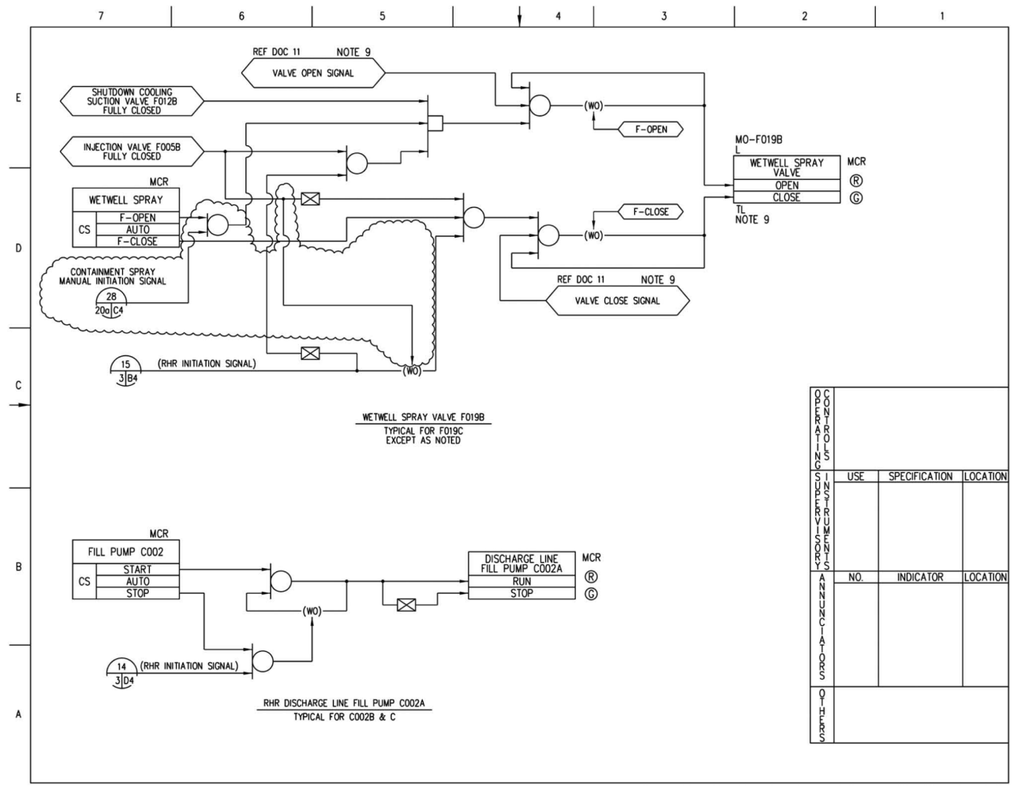

Figure 7.3-4 – Residual Heat Removal System IBD (Sheet 11 of 20)

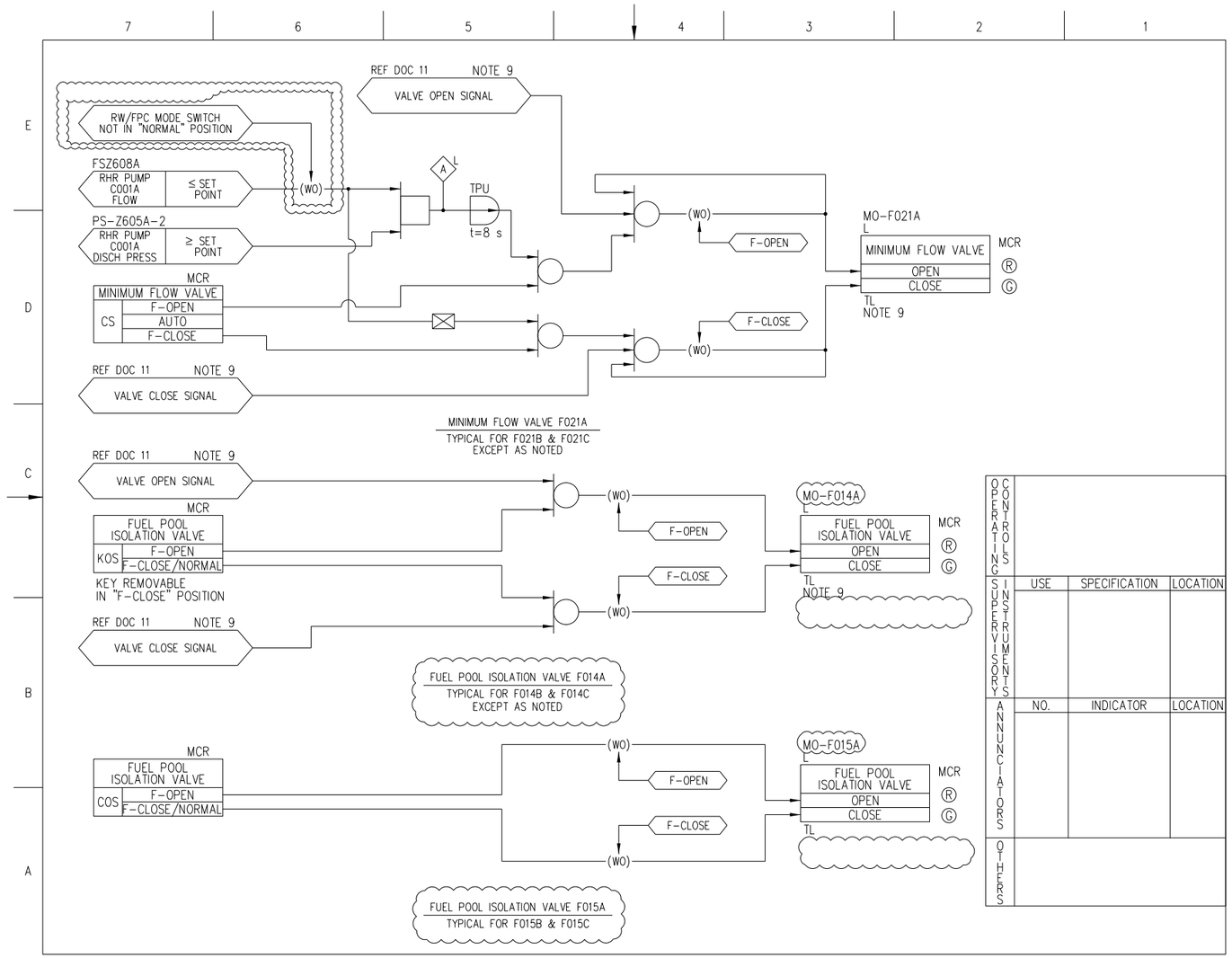

Figure 7.3-4 – Residual Heat Removal System IBD (Sheet 12 of 20)

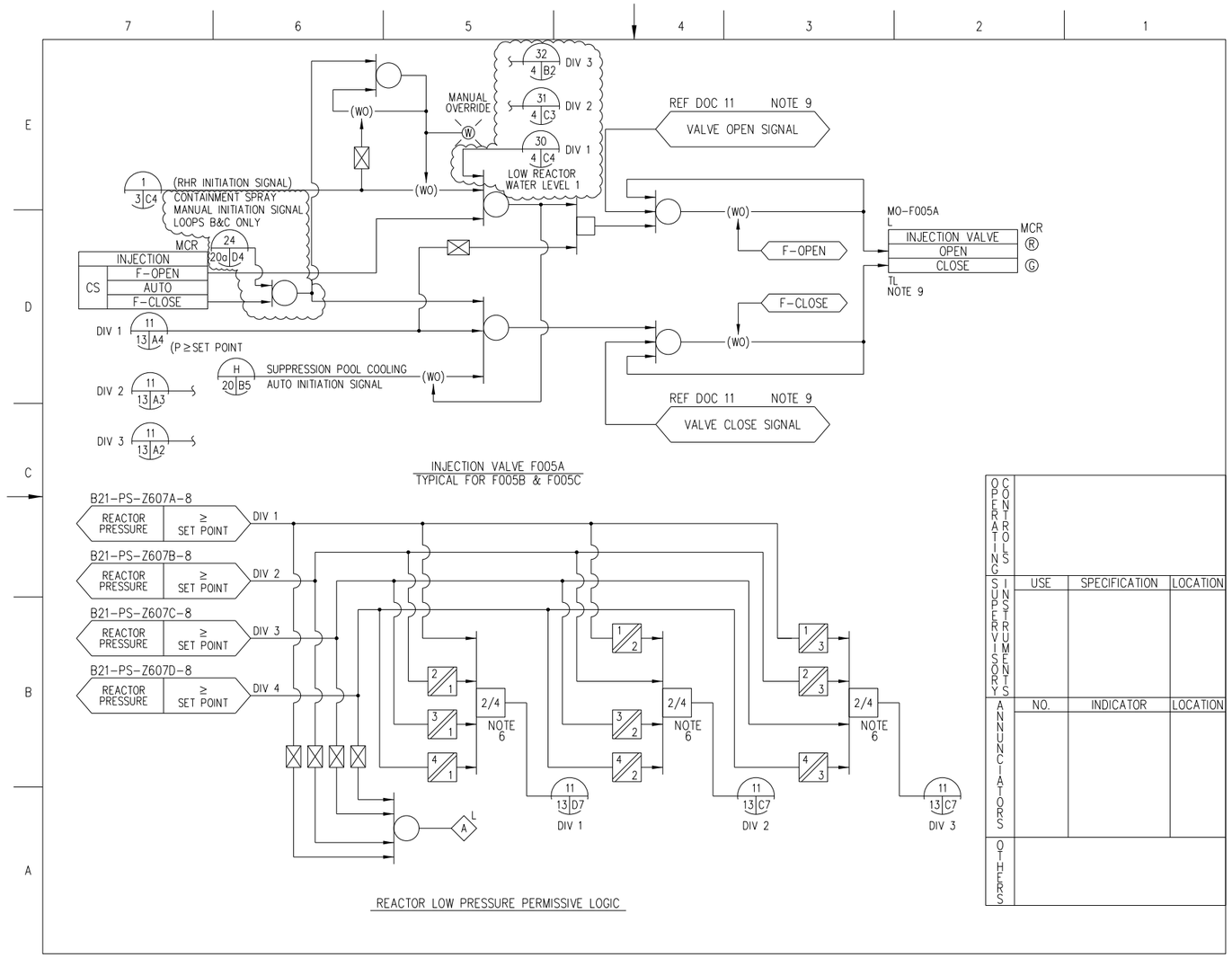

OPERATING CONTROLS			
SUPERVISORY INSTRUMENTS	USE	SPECIFICATION	LOCATION
ANNUNCIATORS	NO.	INDICATOR	LOCATION
OTHERS			

Figure 7.3-4 – Residual Heat Removal System IBD (Sheet 13 of 20)

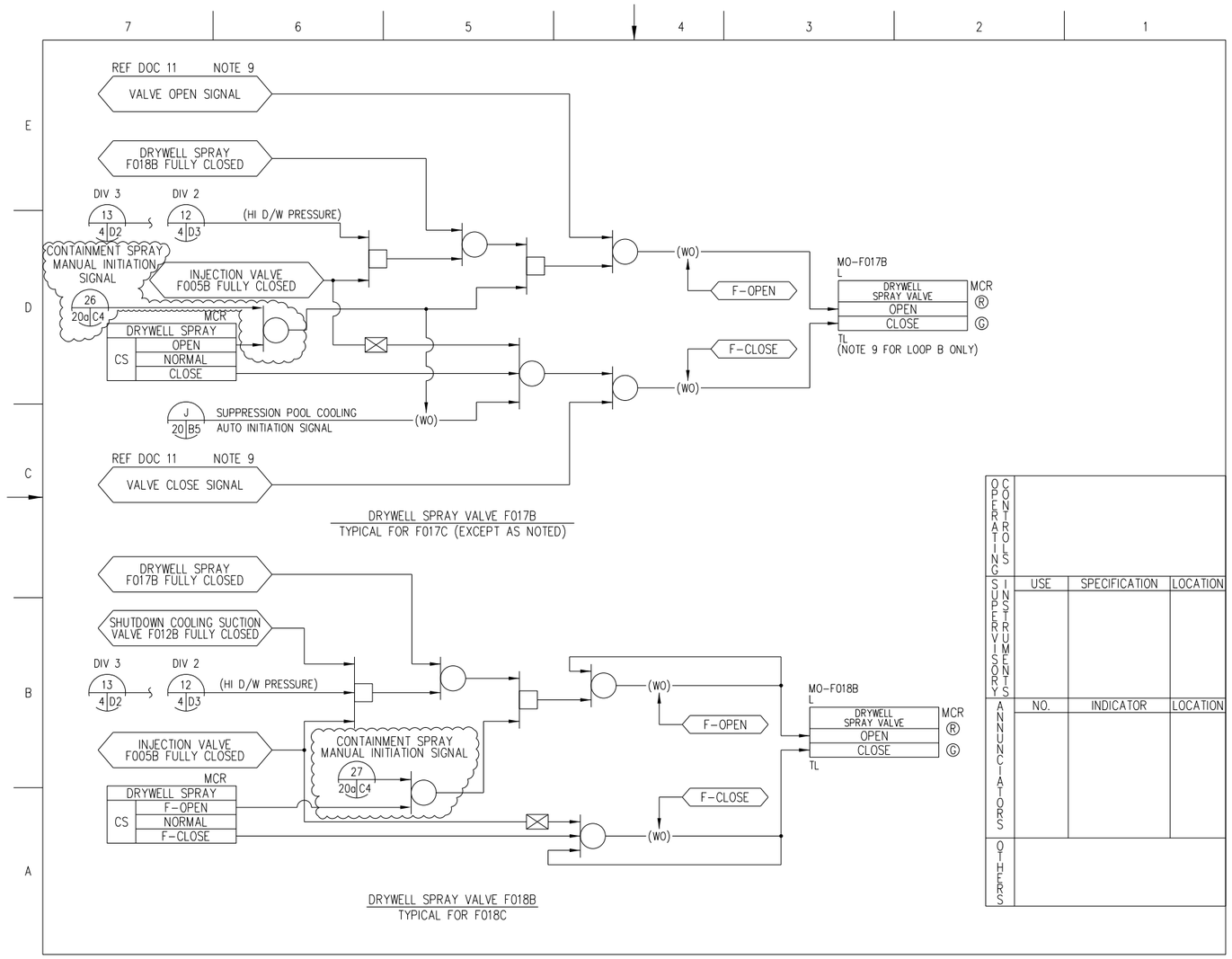

Figure 7.3-4 – Residual Heat Removal System IBD (Sheet 14 of 20)

TABLE 2

ANNUNCIATOR / ALARM LIGHTS / STATUS LIGHTS		
INDICATOR	FUNCTION	INITIATING DEVICE
ALARMS	HIGH DRYWELL PRESSURE	LOGIC OUTPUT
	HIGH SUPPRESSION POOL TEMPERATURE	LOGIC OUTPUT
	LOW REACTOR WATER LEVEL 1	LOGIC OUTPUT
	HIGH WETWELL AIR SPACE TEMPERATURE	LOGIC OUTPUT
	RHR PUMP C001A,B,C HIGH DISCHARGE PRESSURE	PSZ605A-1, B-1, C-1
	RHR LOOP A,B,C ACTIVATED	LOGIC OUTPUT
	RHR PUMP C001A,B,C MOTOR OVERLOAD	METAL CLAD SWITCHGEAR
	LOW REACTOR PRESSURE	LOGIC OUTPUT
	RHR LOOP A,B,C MANUAL INITIATION SWITCH IN ARMED POSITION	PBS
	RHR LOOP A,B,C OUT-OF-SERVICE	COS, LOGIC OUTPUT
	HIGH SHUTDOWN SUCTION PRESSURE LOOP A,B,C	PSZ609A-1, B-1, C-1
	RHR PUMP C001A,B,C DISCHARGE PIPING WATER FILL LOW	PSZ604A, B, C
	RHR LOOP A,B,C LOGIC POWER FAILURE	LOGIC OUTPUT
	POWER LOSS OR THERMAL OVERLOAD OF ANY RHR LOOP A,B,C MOV	MCC
	RHR LOOP A,B,C MOV'S IN TEST STATUS	CS
	RHR C001A,B,C PUMP MOTOR AUTO TRIP	LOGIC OUTPUT
	FILL PUMP C002A,B,C TRIP	MCC
	RHR HEAT EXCHANGER B001A,B,C OUTLET FLOW TEMP HIGH	TIS-Z607A,B,C
	RHR PUMP C001A,B,C OPERATION SWITCH IN PULL-LOCK	PULL LOCK
	RHR PUMPS C001A,B,C SUCTION VALVES CLOSED	LOGIC OUTPUT
	MODE SWITCH IN RW/FPC FOR RHR LOOPS B&C	KOS
	MCC EQUIPMENT IN TEST MODE (THERMAL OVERLOAD RELAY NOT BYPASSED)	KOS
	RHR PUMP C001A,B,C FLOW LOW	LOGIC OUTPUT

TABLE 2 (CON'T)

ANNUNCIATOR / ALARM LIGHTS / STATUS LIGHTS		
INDICATOR	FUNCTION	INITIATING DEVICE
WHITE LIGHT	RHR LOOPS A,B,C INITIATION SIGNAL SEALED-IN	LOGIC OUTPUT
WHITE LIGHT	RHR INJECTION VALVE F005A,B,C MANUAL OVERRIDE	CS, LOGIC OUTPUT
WHITE LIGHT	RHR PUMP C001A,B,C MANUAL OVERRIDE	CS, LOGIC OUTPUT
RED LIGHT	SUPPRESSION POOL COOLING INITIATION	LOGIC OUTPUT
RED LIGHT	RCW COOLING OFF FOR TEST OR DRAIN	KOS
RED LIGHT	CONTAINMENT SPRAY INITIATION	LOGIC OUTPUT

Figure 7.3-4 – Residual Heat Removal System IBD (Sheet 19 of 20)

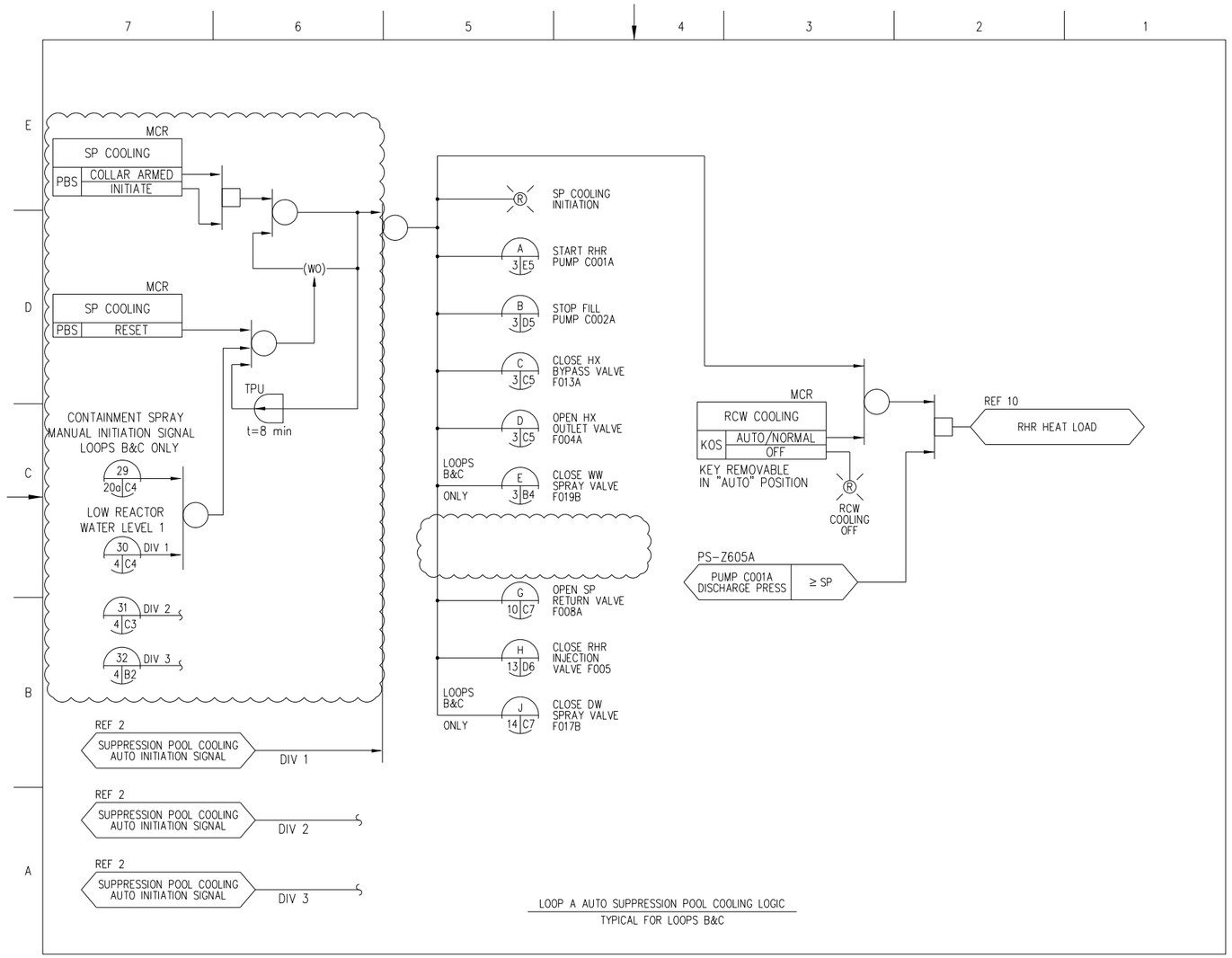

Figure 7.3-4 – Residual Heat Removal System IBD (Sheet 20 of 20)