19L ABWR Shutdown Risk Evaluation

The information in this appendix of the reference ABWR DCD, including all subsections, tables, and figures, is incorporated by reference with the following departures.

STD DEP T1 2.4-1 (Figure 19L-3)

STD DEP 10.4-5 (Table 19L-9)

STP DEP 1.1-2

STD DEP 8.3-1

STD DEP T1 2.12-2

STD DEP 5.4-1

STD DEP 6C-1

19L.2 Conclusions

STD DEP T1 2.4-1 (Figure 19L-3)

STD DEP 10.4-5 (Table 19L-9)

STP DEP 1.1-2

STD DEP 8.3-1

STD DEP T1 2.12-2

STD DEP 5.4-1

STD DEP 6C-1

As discussed in the following subsections, these departures are either 1) improvements in the design and therefore decrease the CDF relative to the reference ABWR design; or 2) do not affect the CDF. Therefore, the results of the risk evaluation for the reference ABWR design are bounding.

19L.6.4 Reactor Water Cleanup System

STD DEP 5.4-1

During the operating Modes 4 & 5, the reactor water cleanup (CUW) system is used in conjunction with the fuel pool cooling and cleanup system (FPC) to provide continuous cleaning of the reactor water. During these modes, ~~both~~ a single *~~pumps~~* pump is needed to *operate to provide 100% capacity. Reactor water flows from the RPV via both the RPV bottom head line and a shared nozzle with the RHR suction line. There is a potential for draining the RPV through the CUW System during shutdown mode as*

discussed below, summarized in Table 19L-7 and shown in Figure 19L-2. As will be shown by the following considerations and analysis, the probability of draining the RPV through the CUW system is negligible.

19L.6.5 Residual Heat Removal System

STD DEP T1 2.4-1

The ABWR residual heat removal (RHR) system is a closed system consisting of three independent pump loops (A, B, and C-where B and C are similar) which inject water into the vessel and/or remove heat from the reactor core or containment. Loop A differs from B and C in that its return line goes to the RPV through the feedwater line whereas loop B & C return lines go directly to the RPV. In addition, loop A does not have connections to the drywell or wetwell sprays. ~~or a return to the fuel pool cooling system.~~ However, for purposes of this analysis, the differences are minor and the three loops can be considered identical. The RHR system has many modes of operation, each mode making use of common RHR system components. These components are actuated by the operator; hence, the operation is subject to operator error which could potentially lead to drainage of the RPV. Potential paths for draining the RPV through the RHR system during operating Modes 4 and 5 are discussed below, summarized in Table 19L-8 and depicted in Figure 19L-3. Of the various modes of RHR operation it was judged that the potential for RPV draining was the greatest during the shutdown cooling mode. Therefore, the potential RPV draining paths start with the RHR in the shutdown cooling mode of operation. As will be shown by the following consideration and analysis, the probability of draining the RPV through the RHR system is negligibly low. Even if all the preventive and mitigative features fail, RPV draining will stop when the RHR shutdown cooling nozzle is uncovered at which point there is still 1.6 meters of water over the top of the active fuel.

19L.6.6 Summary of Reactor Pressure Vessel Draining Events

STD DEP 5.4-1

The reactor water cleanup (RWCU) design includes two 100% pumps instead of the reference ABWR DCD design of two 50% pumps. The two 100% RWCU pumps mean that the risk for shutdown drain down is less than for the reference design.

STD DEP T1 2.4-1

The residual heat removal (RHR) design will have three RHR loops connected to the fuel pool cooling and cleanup system (FPCCS) instead of two for the reference ABWR DCD with normally closed inter-ties to permit additional supplemental cooling during refueling outages to reduce outage time.

Increasing the number of RHR loops connected to FPCCS from two to three results in a decrease in CDF, because it is an improvement of the outage management control for the fuel pool cooling system.

STD DEP T1 2.12-2

Increasing the number of divisions from three (Div I, II, and III) to four (Div I, II, III, and IV) for Class 1E AC Safety-Related Interruptible Instrument Power improves reliability of the safety-related Distributed Control and Information System (DCIS) Division IV, but has no affect on the STP 3&4 PRA.~~and reduces the probability of mitigation system failure.~~

19L.7.2 Success Criteria

STD DEP 10.4-5

A list of core cooling systems that satisfy the core cooling success criteria are as follows:

- *CRDHS, or*
- *HPCF B or C, or*
- *LPFL A, B or C, or*
- *1 feedwater pump* + 1 condensate booster pump *+ 1 condensate pump + 1 condensate transfer pump, or*
- *AC-independent Water Addition System*

19L.8 Loss of Decay Heat Removal Events

STD DEP 5.4-1

The RWCU design includes two 100% pumps instead of the reference ABWR DCD design of two 50% pumps. The two 100% RWCU pumps represent an improvement in the reliability of the RWCU system, and a decrease in shutdown risk.

STD DEP T1 2.4-1

The RHR design has three RHR loops connected to the FPCCS instead of two for the reference ABWR DCD with normally closed inter-ties to permit additional supplemental cooling during refueling outages to reduce outage time.

Increasing the number of RHR loops connected to FPCCS from two to three results in a decrease in CDF, because it is an improvement of the outage management control for the fuel pool cooling system.

STP DEP 1.1-2

The STP FSAR is for a dual unit site (STP 3 & 4) compared with the DCD which is for a single unit site. The shared systems between the STP 3 & 4 (e.g., Fire Protection is credited in the shutdown risk evaluation) does not result in any changes to the assessed risk associated with shutdown conditions because the expected frequency for units being in a shutdown condition and requiring backup cooling from the fire protection system is extremely small.

STD DEP 8.3-1

The STP design incorporates two Reserve Auxiliary Transformers (RATs) in place of the DCD design that has a single RAT. The two RATs afford greater reliability for offsite AC power and therefore, decrease the frequency of a LOOP event.

STD DEP T1 2.12-2

Increasing the number of divisions from three (Div I, II, and III) to four (Div I, II, III, and IV) improves reliability and reduces the probability of mitigation system failure.

STD DEP 6C-1

The ECCS suction strainer departure meets NRC requirements and represents an improvement in the design, and therefore results in a decrease in the shutdown risk profile.

19L.9.4 Loss of Fuel Pool Cooling

STP DEP T1 2.4-1

In the ABWR plant, the fuel pool cooling and cleanup FPC system is backed up by the RHR system ~~(2 of the 3 loops)~~. Therefore, fuel pool cooling function is lost only if both the FPC and ~~two~~ three *loops of RHR system become unavailable. Even if these systems become unavailable, adequate time will be available for repairs to be made to restore the failed systems before fuel damage occurs. Providing makeup water alone will mitigate the accident and many sources of water exist including fire or potable water. The combined probability of loss of FPC and RHR and failure to repair the failed system or provide makeup water is judged to be negligible and therefore it is concluded that this event is a negligible contributor to ABWR plant risk.*

Table 19L-9 Dependency of Core Cooling Systems on Electrical Power

	Power Systems								
System	Offsite Power	Combustion Turbine	DG1	DG2	DG3	Div 1 DC	Div 2 DC	Div 3 DC	Diesel Driven Fire Water Pump
RCIC						XX			
HPCF (B)	OR	OR		OR			XX		
HPCF (C)	OR	OR			OR			XX	
FW (A)	OR	OR	~~OR~~	~~OR~~	~~OR~~				
FW (B)	OR	OR	~~OR~~	~~OR~~	~~OR~~				
FW (C)	OR	OR	~~OR~~	~~OR~~	~~OR~~				
FW (D)	OR	OR							
CRD (A)	OR	OR	OR	OR	OR				
CRD (B)	OR	OR	OR	OR	OR				
LPFL (A)	OR	OR	OR			XX			
LPFL (B)	OR	OR		OR			XX		
LPFL (C)	OR	OR			OR			XX	
Firewater*	OR†	OR	OR	OR	OR†				OR
Condensate									
(A)	OR	OR	~~OR~~	~~OR~~	~~OR~~				
(B)	OR	OR	~~OR~~	~~OR~~	~~OR~~				
(C)	OR	OR	~~OR~~	~~OR~~	~~OR~~				
(D)	OR	OR	~~OR~~	~~OR~~	~~OR~~				
Condensate Booster									
(A)	OR	OR							
(B)	OR	OR							
(C)	OR	OR							
(D)	OR	OR							

* Assumes manual feedback capability for combustion turbine distribution system

† AC-independent water addition system

DG1 – Diesel generator 1

FW – Feedwater

LPFL – Low pressure core flooder

OR – Redundant supply to other Ors

XX – Loss of this power supply means loss of system

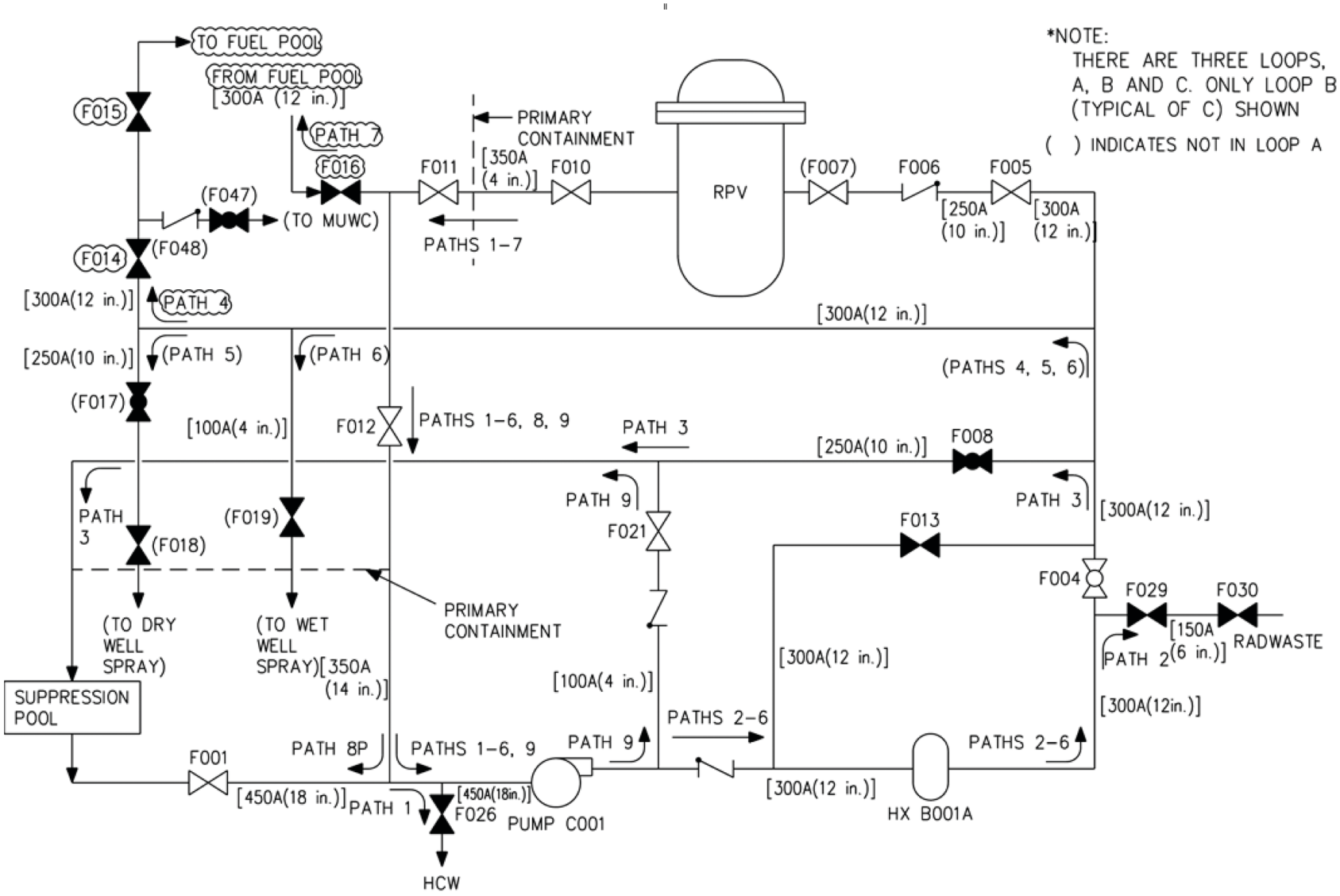

Figure 19L-3 Potential Path for Draining RPV Through Residual Heat Removal System (Pump On)