9.5 Other Auxiliary Systems

The information in this section of the reference ABWR DCD, including all subsections, tables, and figures, is incorporated by reference with the following departures and supplements.

STD DEP T1 3.4-1	STD DEP 9.5-2 (Figure 9.5-3, replaced entire figure)
STP DEP 1.1-2 (Figures 9.5-2, 9.5-4 and 9.5-5)	STD DEP 9.5-3
STP DEP 1.2-2 (Table 9.5-5)	STD DEP 9.5-4
STD DEP 8.3-1	STP DEP 9.5-6 (Figure 9.5-6)
STD DEP 9.4-2 (Table 9.5-5)	STP DEP 9.5-7 (Table 9.5-5)
STD DEP 9.5-1	STD DEP Admin

9.5.1 Fire Protection System

9.5.1.1.2 Divisional Separation

STD DEP T1 3.4-1

All divisions are present in the control room and this cannot be avoided. It is the purpose of the remote shutdown panel to provide redundant control of the safe shutdown function from outside of the control room. The controls on the remote shutdown panel are hard wired to the field devices and power supplies. The signals between the remote shutdown panel and the control room are ~~multiplexed~~ communicated *~~over fiber optic cables so~~*such *that there are no power supply interactions between the control room and the remote shutdown panel.*

9.5.1.1.4 Combustible Loading

STD DEP T1 3.4-1

Combustible loading due to cable insulation has been minimized by locating the power sources adjacent to the loads served and ~~multiplexing~~ transmitting *the control signals to and from the control room. This has allowed the elimination of cable spreading rooms and most of the cables to and from the control room. ~~Multiplexing~~* Data communication *is also used within the control room so that the cables between panels have been reduced to mostly power cables.*

9.5.1.1.6 Smoke Control System

STD DEP 9.4-2

Upon manual initiation of the smoke removal mode, the recirculation damper is closed, the exhaust fans are stopped, and the smoke removal fan is started in conjunction with the supply fan for 100% outside air purging. In the Control Building, the recirculation damper is closed, the damper in the bypass duct around the air handling unit is

opened, *and* ~~one or~~ *both* ~~*the*~~ *exhaust fans are operated in conjunction with the supply fan for smoke removal.*

9.5.1.1.7 Spurious Control Actions

STD DEP T1 3.4-1

As stated above, the systems are separated by fire areas on a divisional basis. ~~*The multiplexing system is a dual channel system. Two simultaneous, identical digitized control signals are required at the demultiplexer for control action to be taken at the field device.*~~ The ESF Logic and Control System (ELCS) utilizes redundant fiber optic links to communicate ESF system level actuation status to the Remote Digital Logic Controllers (RDLCs), which control the remote input/output functions and the actuation of the electromechanical components. The RDLC utilizes diagnostics to verify the validity of each redundant message. The redundant messages received by the RDLC must match for component actuation to occur. *The probability of* ~~*two*~~ *spurious* messages occurring on each of the redundant links that both pass the communication diagnostics and that also match between the two redundant links ~~*signals matching*~~ *is essentially zero.*

The significance of the ~~*two-channel operation of the multiplex system*~~ redundant fiber optic design *is that, if the ability to operate from the control room is lost, equipment will continue to run until manually shutdown in the field by the operators. Equipment may also be manually started at the switchgear or motor control centers during a control room fire situation without fear that failures in the control room would cause the equipment to be shutdown. The feature of being able to start equipment locally without fear of it being shut down by spurious signals from the control room makes it possible to utilize nonsafety-related systems such as the feedwater and condensate pumps in the Turbine Building as backups to the safety-related safe shutdown system, if desired.*

The interlocks which prevent damage of equipment may be accomplished directly and by hard wiring in the field. For example, the protective relaying for the switchgear is located in the switchgear and the interlocks accomplished in switchgear. Signals for operational logic are ~~*multiplexed*~~ communicated *to the control room, but protective actions are not dependent on conditions in the control room.*

The evaluation of single and multiple spurious operations that could adversely impact post-fire safe shutdown will be performed in a manner that is consistent with the methodology of NEI 00-01, Revision 2 as modified by the guidance of RG 1.189 Revision 2 as it applies to Single and Multiple Spurious Operation Analysis.

9.5.1.3.1 General Description

STP DEP 1.2-2

The suppression systems for the buildings and the plant yard are shown in the following figures:

Area	*Figures*
Reactor Building	*9A.4-1 thru 9A.4-10*
Control Building	*9A.4-11 thru 9A.4-16*
Turbine Building	*9A.4-17 thru 9A.4-21*, 9A.4-33 and 9A.4-34
Service Building	*9A.4-22 thru 9A.4-27*
Radwaste Building	*9A.4-28 thru 9A.4-32*
Plant Yard	*9.5-5*

9.5.1.3.4 Protection of Operating Units

The following site-specific supplement addresses the COL License Information Item discussed in this subsection.

Fire protection of the operating units during construction of the additional units is addressed in Appendix 9E~~S~~.

9.5.1.3.5 General Description of Fire Protection System

STP DEP 1.1-2

STP DEP 1.2-2

STP 3 & 4 is a dual-unit station. The water supply for fire protection will be shared by STP 3 & 4. A single fire protection pump house and two storage tanks are located within the protected area boundary that provides water for fire suppression to both units via piping in the yard. This common system has the same capability as the system for the single unit design. The fire protection water supply complies with Regulatory Guide 1.189, Rev. 1, which states that a common water supply may be utilized for multi-unit nuclear power plant sites with a common yard fire main loop. The common fire water supply and yard main piping system for STP Units 3 & 4 are depicted in Figures 9.5-4 and 9.5-5. The common yard fire main loop surrounding STP Units 3 & 4 is cross-connected between units in accordance with Regulatory Guide 1.189, Rev. 1.

The Turbine Building is provided with standpipes, hose reels and ABC portable extinguishers throughout the building. In addition, the following fire suppression systems provide primary fire suppression capability to the following areas:

(1) Automatic closed head sprinkler systems are provided ~~in the open grating area of the three floors under the turbine~~ throughout the Turbine Building except in higher hazard areas that are protected as described below.

(2) *Deluge foam-water sprinkler systems are provided in the* combustion turbine generator areas, hydrogen seal oil unit room, turbine lube oil storage tank room, EHC hydraulic control unit room, *lube oil conditioning area and the lube oil reservoir area.*

~~(3) *A deluge sprinkler system is provided in the hydrogen seal oil unit area.*~~

~~(4) *A preaction sprinkler system is provided in the auxiliary boiler area.*~~

9.5.1.5 Inspection and Testing Requirements

The following site-specific supplement addresses inspection and testing requirements for both startup and post startup of the fire protection system.

A final plan for implementation of the fire protection system pre-operational and post-operational inspection and testing program, based on the as-procured and as-installed fire protection systems and components, including the fixed and portable emergency lighting and the fixed and portable communication systems, will be available prior to commencement of construction. The plan includes documented instructions, procedures or drawings that prescribe inspections and tests that govern the installed fire protection systems. The scope of items for inspections and testing includes fire protection system equipment and active components, as well as passive features such as fire barriers, fire dampers, fire doors, and fire-rated penetration seals. (COM 9.5-1)

The plan will comply with Regulatory Position C.2.4 in Regulatory Guide 1.189, Revision 1. Preoperational and post-operational inspections and tests will comply with the applicable NFPA codes and standards. (COM 9.5-2)

9.5.2 Communication Systems

STP DEP 1.1-2

At STP 3 & 4, a common communication system is used to provide plant-wide communications between the dual units. The communication system is not safety-related. A common communication system providing plant wide communications is a safety enhancement since it allows for ease of communication between units. The representative outline of the common communication system is shown in Figure 9.5-2 for STP 3 & 4.

9.5.2.6.3 System Operation

The following site-specific supplement addresses the COL License Information Item discussed in this subsection.

Telephone system EPBX switches are powered by an individual 8-hour battery system. These battery systems are charged by offsite 120 Vac backed up by the Emergency Operations Facility or Nuclear Support Center diesels. Loss of normal 120 Vac and low battery voltages are annunciated.

The jacks for use with electosound telephones in the maintenance jack system are powered by 8 Vdc from the sectionalizing panels. The power supply is mounted internal to the sectionalizing panel.

Two-way radio system repeater base stations are powered by normal plant 120 Vac power backed up with a non-Class 1E Combustion Turbine Generator (CTG). Mobile radios are powered by vehicular batteries. Handheld portables are powered with self-contained batteries.

The radio paging transmitter and countertop paging terminal are powered by normal plant 120 Vac backed up by a non-Class 1E CTG. The pocket pager units are supplied with a self-contained battery.

The operator communication panels are powered with normal plant 120 Vac and backed up with non-Class 1E CTG and an 8-hour battery.

9.5.3 Lighting and Servicing Power Supply System

STD DEP 9.5-4

STD DEP Admin

All lighting systems are designed to provide intensities consistent with the lighting needs of the areas in which they are located, and with their intended purpose. The lighting design considers the effects of glare and shadows on control panels, video display devices, and other equipment, and the mirror effects on glass and pools. Lighting and other equipment maintenance, in addition to the safety of personnel, plant equipment, and plant operation, is considered in the design. Areas containing flammable materials (e.g.., battery rooms, fuel tanks) have explosion proof lighting systems. Areas subject to high moisture have water-proof installations (e.g.., drywell, washdown areas). Plant AC lighting systems are generally of the fluorescent type, with ~~mercury~~ High-Pressure Sodium (HPS) *lamps (or equivalent) provided for high ceiling~~, except where breakage could introduce mercury into the reactor coolant system~~. Incandescent lamps are used for DC lighting systems and above the reactor, and fuel pool ~~and other areas where lamp breakage could introduce mercury into the reactor coolant~~.*

The following site-specific supplement is provided.

Emergency lighting comprised of emergency DC lighting and guide lamp lighting systems is provided throughout the plant as necessary to support fire suppression actions and safe-shutdown operations, including access and egress pathways to safe-shutdown areas during a fire event.

The emergency lighting power distribution system contains protective devices necessary to preclude a fire in one area from causing a loss of emergency lighting in any unaffected area required for safe-shutdown operations.

9.5.3.1.1 General Design Bases

The general design bases for the Nuclear Island portion of the lighting systems are as follows:

(4) Each of the normal, standby or emergency lighting systems has the following arrangement criteria:

(l) ~~(5) For mercury lamps, ballasts can be installed separately for life extension under the defined environment.~~ (Not Used)

The following site-specific supplement is provided.

(s) ~~(4)~~ Control switches for lighting fixtures inside the drywell or containment are installed both inside and outside of the drywell/containment.

(5) Lighting fixtures shall be selected in accordance with the following criteria:

(a) ~~(3)~~ Lighting fixtures inside the plant are the following type of fixtures:

(ii) ~~(2) Mercury~~ **HPS** ***lamps*** *– ~~Mercury~~* HPS *lamps (or equivalent) shall be selected as fixtures for high ceiling areas ~~(except in reactor building or other areas where lamp breakage could introduce mercury into the reactor coolant).~~*

The following site-specific supplement is provided.

(o) ~~(1)~~ High-efficiency electronic ballasts are not used in a high radiation environment.

(p) ~~(0)~~ Lighting fixtures for yard lighting are 1000W HPS lamps mounted on 100-foot (30.48m) lighting poles with retractable/lowering devices.

9.5.3.1.2 Safety-Related Design Bases

Nuclear safety-related design bases for ABWR Standard Plant lighting systems are as follows:

(1) ~~Mercury vapor fixtures and mercury switches are not used where a broken fixture or switch may result in introduction of mercury into the reactor coolant system.~~ (Not Used)

(2) Adequate lighting for any safety-related areas, such as areas used during emergencies or reactor safe shutdown, including those along the appropriate access or exit routes, are provided from three different lighting circuits (standby AC; emergency 125VDC, or self-contained battery fixtures).

9.5.3.2 System Description

~~*Lighting fixtures that contain mercury are not used inside the Reactor Building or in any other location where broken fixtures may introduce mercury into the reactor coolant system.*~~

9.5.3.2.1 Normal (Non-Class 1E) Lighting

The following site specific-supplement is provided.

Yard lighting is supplied at 480V from non-Class 1E sources. If this power is not available, power for the yard lighting will be automatically provided from the non-Class 1E CTG.

9.5.3.3 Inspection and Testing Requirements

STD DEP Admin

Since the normal standby and emergency lighting circuits are energized and maintained continuously, they require no periodic testing. However, periodic inspection and bulb replacement will be performed (Subsection ~~8.3.4.2.5~~ 8.3.4.25*). The guide lamps are capable of being tested and will be inspected and tested periodically to ensure operability of lights and switching circuits.*

9.5.4 Diesel Generator Fuel Oil Storage and Transfer System

STP DEP 9.5-6

9.5.4.1.1 Safety Design Bases

(4) The diesel-generator fuel oil storage and transfer system is of Seismic Category I design. In addition, the storage tanks are separately located underground in vaults, designed for stick gauge access *and are protected from damage by flying missiles carried by tornados and hurricanes, from external floods, and other environmental factors. The fill connection is located at grade elevation. The ~~vent and~~ sample connection ~~are~~* is *located a little above the grade elevation. The fill and sample lines are capped and locked to prevent entry of moisture.* The fill and sample lines are also provided with locked-closed isolation valves. The vent is located above the maximum flood level. *Each vent is of fireproof goosenecked line with fine mesh screen to prevent access of debris.*

9.5.4.2 System Description

The diesel-generator fuel oil storage and transfer system for each engine consists of a yard 7-day storage tank, a fuel oil day tank, two *fuel oil transfer ~~pump~~* pumps, located inside the storage tank, *suction strainer, duplex filter, instrumentation and controls, and the necessary interconnecting pipe and fittings. A bleed line returns excess fuel oil from the day tank for recirculation to the yard storage tank.* A gravity drain is supplied from the bottom of each of the yard storage tanks. These drains periodically remove any water accumulation and sediment from the tanks. The suction of the fuel oil transfer

pumps is elevated two to three inches above the tank low points to allow some tank volume for the settling of any water. *Day tank elevation is such that the engine fuel oil pump operates with flooded suction. The bottom of the day tank will never be lower than the pump suction centerline.*

9.5.4.3 Safety Evaluation

The Seismic Category I portions of diesel-generator fuel oil piping ~~will be~~ is *routed in tunnels between the storage tanks and the Reactor Building. The system ~~will be~~* is *provided with a protection against external and internal corrosion. The ~~buried portion of the~~* storage *tanks,* located in vaults, *~~and piping will be~~* are *provided with waterproof protective coating. ~~and an impressed current-type cathodic protection, to control the external corrosion of underground piping system. The impressed current-type cathodic protection system will be designed to prevent the ignition of combustible vapors or fuel oil present in the fuel oil system, in accordance with Regulatory Guide 1.137, Paragraph C.1.g.~~*

9.5.4.4 Tests and Inspections

Each fuel oil storage tank will be emptied and accumulated sediments be removed every 10 years to perform the ASME Section XI, Article IWD-2000 examination requirements.

~~In accordance with Regulatory Guide 1.137, periodic surveillance of cathodic protection for underground piping system will be provided, not to exceed a 12-month interval, to make sure that adequate protection exists. At intervals not exceeding 2 months, each of the cathodic protection rectifiers shall be inspected.~~

New fuel oil will be tested for specific gravity, cloud point and viscosity and visually inspected for appearance prior to addition to ensure that the limits of ASTM D975 are not exceeded. Analysis of other properties of the fuel oil will be completed within two weeks of the fuel transfer.

9.5.5 Diesel-Generator Jacket Cooling Water System

STD DEP 9.5-1

9.5.5.4 Tests and Inspection

To ensure the availability of the diesel-generator cooling water system, scheduled inspection and testing of the equipment is performed in accordance with Regulatory Guide ~~1.108,~~ 1.9*, as part of the overall engine performance checks.*

9.5.10 Motor-Generator Set

STD DEP 9.5-3

STD DEP 8.3-1

9.5.10.2 System Description

Two MG sets are provided; each is connected to an independent ~~6.9~~ 13.8 kV power bus. The individual power buses are separated from one another by unit auxiliary ~~transformer~~ transformers and circuit breakers. Each MG set is designed to provide constant voltage and constant frequency power to three adjustable speed drives (ASDs). These ASDs are the static converter devices which generate the appropriate variable voltage, variable frequency power to the connected RIPs.

Each MG set consists of the following components:

(1) An induction motor.

(2) A generator and excitation system. The exciter design is of brushless type.

(3) A flywheel of appropriate moment of inertia to satisfy the pump speed coastdown requirements as specified in Subsection 9.5.10.1.

(4) Control and protective circuits. The control circuit is designed to maintain generator output at a fixed voltage-to-frequency (V/f) ratio for optimum RIP speed modulation. Protective logic and circuits, monitoring instrument, annunciators, indicators, etc. are provided to protect the MG set components from being damaged by consequences of abnormal equipment operation.

The MG set does not interface directly with the ASD/RIP loads; it interfaces with the loads through ~~three isolation~~ three vacuum circuit breakers (VCBs) and three ASD input *transformers. ~~These isolation~~* Each VCB provides for automatic or manual disconnection of the associated ASD input transformer and ASD/RIP motor load from the generator power output. The ASD input *transformers provide two functions in the RIP power supply systems. They step down the MG set voltage output to the level compatible with the rectifier ~~circuit~~* circuitry *in the ASD. Also, by phase-shifting the output of the three transformers by ±20 degrees among one another, a majority of the harmonic currents produced by the 6-pulse ASD converter ~~is~~*are *canceled, thus preventing most of the negative-phase-sequence current from flowing back into the generator.*~~Also, by applying phase-shifting principles for the design of the ASD input transformers, the level of the harmonic currents produced by the three operating ASD converters are greatly reduced, as compared to the harmonic currents that would be produced by an equivalent single input transformer with an associated single 6-pulse type ASD converter design, thus minimizing the harmonic currents flowing back into the generator.~~

The MG set will be started with no load. This is accomplished by first leaving all connected ASD loads in their ~~tripped position~~ shutdown or tripped status. *The MG set motor is started by a control switch in the main control room, and accelerates directly to the rated speed. The connected ASD loads are then sequentially placed online by the control room operator through issuance of proper mode switch commands. The MG set output varies from no load to full load in accordance with the variable operating speed of the ~~RIP's~~* RIPs *. Shutdown of the MG sets is the exact reverse of the startup.*

9.5.11 Combustion Turbine/Generator

STD DEP 8.3-1

9.5.11.1 Design Basis

The design bases of the equipment shall meet the following performance criteria:

(1) The CTG unit shall automatically start, accelerate to required speed, reach nominal voltage and frequency, and begin accepting load within ~~two~~ ten *minutes of receipt of its start signal.*

(2) The CTG shall be capable of being manually connected to SBO shutdown loads (via any one of the Class 1E diesel generator buses) from the main control room within ten minutes from the beginning of the event. The CTG shall also be capable of being manually connected to the Class 1E buses. However, the CTG shall not be normally connected to plant safety buses nor require any external AC power to operate. There shall be two circuit breakers (one Class 1E and one non-class 1E) in series between the bus automatically connected to the *CTG and each Class 1E bus.*

(4) The CTG shall have an ISO rating (continuous rating at ~~15°C and at sea level~~ site conditions*) of at least ~~9~~* 20 *MW, with nominal output voltage of ~~6.9~~13.8 kV at 60 Hz.*

9.5.11.2 System Description

The CTG is designed to supply standby power to selected loads on any two of the three turbine building (Non-Class 1E) ~~6.9~~ 4.16 kV buses which carry the plant investment protection (PIP) loads during LOPP events. The CTG automatically starts on detection of a voltage ~~drop~~ of ≤70% on its preselected PIP buses. When the CTG is ready to load, if the voltage level is still deficient, power is automatically transferred to the CTG.

Manually controlled breakers also provide the capability of connecting the combustion turbine generator to any of the ~~6.9~~ 4.16kV Class 1E buses if all other power sources are lost. The reconfiguration necessary to shed PIP and connect the CTG to a preselected bus for emergency shutdown loads can be accomplished from the main control room within 10 minutes of the onset of a postulated station blackout event. Thus, the CTG meets the requirements for alternate AC (AAC) source (per Regulatory Guide 1.155) such that a station blackout coping analysis is not required. The additional connection capability for the remaining Class 1E buses enable the operator to start and operate redundant shutdown loads and other equipment loads if necessary.

(3) ~~A reduction drive gear system between the turbine and generator.~~ Not Used.

9.5.12 Lower Drywell Flooder

STD DEP 9.5-2

9.5.12.1 Design Basis

The equipment shall meet the following performance criteria:

(1) The LDF shall provide a flow path from the suppression pool to the lower drywell when the drywell air space temperature reaches ~~a nominal temperature of~~ 260°C.

(2) The LDF shall distribute flow ~~evenly~~ around the circumference of the lower drywell.

9.5.12.2 System Description

The LDF, shown schematically in Figure 9.5-3, provides a flow path for suppression pool water into the lower drywell area during severe accident scenario that leads to core meltdown, vessel failure, and deposition of molten corium on the lower drywell floor. Molten corium is a molten mixture of fuel, reactor internals, the vessel bottom head and control rod drive components. The flow path is opened when the lower drywell airspace temperature reaches 260°C ~~± 10°C~~.

The LDF consists of ten pipes that run from the vertical pedestal vents into the lower drywell. Each pipe ~~contains~~ has an isolation valve and *a fusible plug valve connected to the end of the pipe that extends into the lower drywell ~~by a flange~~. The fusible plug valves open when the drywell air space ~~(and subsequently the fusible plug)~~ temperature reaches 260°C ~~± 10°C~~. When the fusible plug valves open, a minimum of 10.5 L/s of suppression pool water will be supplied through each flooder pipe (105 L/s total) to the lower drywell to quench the corium, flood the lower drywell and remove corium decay heat, which is estimated at 1% of rated thermal power. The flow rate is based on a minimum hydrostatic head of 200 mm above the flooder pipe inlet centerline and takes the frictional losses through the flooder pipe and fusible plug valve into account.*

~~*The fusible plug valves are made from flanges welded to the end of the vent inside the lower drywell area. The inner diameter of the pipe is slightly enlarged to accommodate a stainless steel separation disk, an insulating disk and fusible metal. The stainless steel disk prevents suppression pool water from corroding the plug material. The insulating disk thermally insulates the fusible metal from the wetwell water to assure that the fusible metal is not cooled by wetwell water and prevented from melting during the severe accident high lower drywell temperature conditions. Teflon was selected for the insulating disk because it has a softening temperature of 400°C and a maximum continuous operating temperature of 288°C, both of which are above the plug melting temperature. Furthermore, teflon has high chemical resistance and will not adhere to the stainless steel plug or the fusible plug. The end of the fusible plug valve is covered with a plastic cover that has a low melting point. The purpose of the cover is to avoid corrosion of the fusible metal material and to assure that any toxic components from the fusible metal material that might be released do not escape into the lower drywell area during normal plant operation.*~~ The fusible plug valves open fully, and stay open when the air surrounding the fusible plug valves reaches 260°C ~~± 10°C~~. Opening of the valves is triggered by a temperature sensitive fusible plug (or fusible link) that melts

when the surrounding air in the lower drywell reaches the opening temperature of 260°C ~~nominal~~. The temperature sensitive fusible material is isolated from the thermal effects of the suppression pool water inside the fusible plugs as required, to assure consistent operation when the 260°C ~~nominal~~ opening temperature is reached. The fusible plug valves are not pressure relief valves. The pressure retaining portions of the fusible plug valves that contact the suppression pool water are made from stainless steel materials. The seals and gaskets used are compatible with suppression pool water at the design pressure and temperature listed in Subsection 9.5.12.3.1. The fusible plug valves have zero leakage under all operating and accident conditions, until the surrounding air temperature reaches 260°C ~~± 10°C~~. The temperature sensitive fusible material is protected or isolated, as required, from the following: moisture and humidity in the lower drywell, contact with personnel or equipment in the lower drywell, or release of any toxic components to the lower drywell (except during heat-up to 260°C).

9.5.12.3 Safety Evaluation

9.5.12.3.1 General Evaluation

The fusible plugs are passive, safety-related components~~,~~ whose design function is to remain closed to maintain the suppression pool pressure boundary during all operating conditions, including a Design Basis Accident. ~~but~~They are non-ASME Code components due to their application and function ~~of opening~~to open during a Beyond Design Basis Accident at a set temperature (260°C~~± 10°C~~).

The fusible plug is required to open fully when the ~~outer metal temperature of~~ air surrounding *the valve reaches 260°C ~~± 10°C~~ during a severe accident and to pass a minimum of 10.5 L/s with 375 mm of water above the valve inlet* flange.

A plastic cover on the valve outlet seals the valve from the intrusion of moisture that could cause corrosion of the fusible metal material. The plastic cover has a melting point below 130°C and greater than 70°C and is required to melt completely or offer minimal resistance to valve opening when the opening temperature is reached.

9.5.12.4 Testing and Inspection Requirements

No testing of the LDF system will be required during normal operation. During refueling outages, the following surveillance would be required:

(1) During each refueling outage, verify that there is no leakage from the fusible plug valve flange or outlet when the suppression pool is at its maximum level

~~*(2) Once every two refueling outages, lower suppression pool water level or plug the flooder pipe inlet and replace two fusible plug valves. Test the valves that were removed to confirm their function. This practice follows the precedent set for inservice testing of Standby Liquid Control System (SLCS) explosive valves in earlier boiling water reactors.*~~

(2) Once every two refueling outages, two of the fusible plugs valves are tested to demonstrate proper opening function and triggering of the opening at the proper temperature. These tests may be performed together or separately, and the two fusible plug valves tested (or temperature sensitive materials) will be replaced.

9.5.13 COL License Information

9.5.13.1 Contamination of the Diesel Generator Combustion Air Intake

The following site-specific supplement addresses COL License Information Item 9.18.

Measures will be undertaken prior to and subsequent to testing of the diesel generators to restrict contaminating substances from the STP site which may be available to the diesel generator air intakes. (COM 9.5-3)

9.5.13.2 Use of Communication System in Emergencies

The following standard supplement addresses COL License Information Item 9.19.

Procedure(s) for use of the plant communication system in emergencies including from RSS in the event of a main control room fire will be developed prior to fuel load. These procedures will be developed consistent with the plant operating procedure development plan in Section 13.5. (COM 9.5-4)

9.5.13.3 Maintenance and Testing Procedure for Communication Equipment

The following standard supplement addresses COL License Information Item 9.20.

Procedure(s) for maintenance and testing of the plant communication systems will be developed prior to fuel load. These procedures will be developed consistent with the plant operating procedure development plan in Section 13.5. (COM 9.5-5)

9.5.13.4 Use of Portable and Hand Light in Emergency

The following standard supplement addresses COL License Information Item 9.21.

The design of the lighting system complies with BTP CMEB 9.5-1, position C.5.g (1) and (2) as discussed below.

Suitable fixed and portable emergency lighting devices are available as follows:

(1) Fixed self-contained lighting consisting of fluorescent or sealed-beam units with individual 8-hour minimum battery power supplies are available in areas that must be manned for safe shutdown and for access and egress routes to and from all fire areas. Safe shutdown areas include those required to be manned if the control room must be evacuated.

(2) Suitable sealed-beam battery-powered portable hand lights are available for emergency use by the fire brigade and other operations personnel required to achieve safe plant shutdown.

9.5.13.5 Vendor Specific Design of Diesel Generator Auxiliaries

The following standard supplement addresses COL License Information Item 9.22.

The as-built diesel generator support systems (i.e., the Diesel Generator Fuel Oil System, the Diesel Generator Cooling Water System, the Diesel Generator Starting Air System, the Diesel Generator Lubrication System, the Diesel Generator Combustion Air Intake and Exhaust System) will be reviewed for any differences in design from those discussed in Subsections 9.5.4 through 9.5.8 of the reference ABWR DCD, respectively. The FSAR will be updated in accordance with 10 CFR 50.71(e) to identify any departures. (COM 9.5-6)

In accordance with 10 CFR 50.71(e), the FSAR will be updated to provide the following as-built information:

(1) Not Used

(2) Provision for stick gauges on fuel storage tanks for the Diesel Generator Fuel Oil Storage and Transfer System.

(3) A description of engine cranking devices for the Diesel Generator Starting Air System (Subsection 9.5.6.).

(4) Duration of cranking cycle and number of engine revolutions per start attempt for the Diesel Generator Starting Air System (Subsection 9.5.6.).

(5) Lubrication system design criteria (pump flows, operating pressure, temperature differentials, cooling system heat removal capabilities, and electric heater characteristics) for the Diesel Generator Lubrication System (Subsection 9.5.7.).

(6) Selection of a combustion air flow capacity sufficient for complete combustion in the Diesel Generator Combustion Air Intake and Exhaust System (Subsection 9.5.8.).

(7) Volume and design pressure of air receivers (sufficient for 5 start cycles per receiver) for the Diesel Generator Starting Air System (Subsection 9.5.6.).

(8) Compressor size (sufficient discharge flow to recharge the system in 30 minutes or less) for the Diesel Generator Starting Air System (Subsection 9.5.6.).

9.5.13.6 Diesel Generator Cooling Water System Design Flow and Heat Removal Requirements

The following standard supplement addresses COL License Information Item 9.23.

In accordance with 10 CFR 50.71(e), the FSAR will be updated to provide the following as-built information: the design flow and heat removal requirements for the Diesel Generator Cooling Water System (Subsection 9.5.5.), including the design heat removal capacities of all the coolers and heat exchangers in the system. (COM 9.5-7)

In accordance with 10 CFR 50.71(e), the FSAR will be updated to provide the following as-built information:

(1) Type of jacket water circulating pumps (i.e., motor-driven or others) (Subsection 9.5.5).

(2) “Amot” brand or equal type of temperature sensor (per NUREG/CR-0660, Page V-17, Recommendation under Item 4).

(3) Expansion tank capacity (Subsection 9.5.5).

(4) NPSH of jacket water circulating pump (Subsection 9.5.5).

(5) Cooling water loss estimates (Subsection 9.5.5).

9.5.13.7 High Energy Piping Penetration Seals

The following site-specific supplement addresses COL License Information Item 9.24.

STP high energy piping penetrations through 3-hour fire rated walls will be provided with 3-hour fire-rated penetration seals in accordance with a nationally recognized laboratory tested and approved assemblies. Actual construction of a specific tested penetration seal assembly will be made after field verification of the dimensions, configuration, and orientation of the as-constructed penetration with all penetrating pipes and other commodities identified.

Tested penetration seal assembly design ratings normally include sealing product qualifications for high temperature exposure and some limited lateral movement of the penetrating items. For high energy piping penetrating fire barriers, fire rated boot seals with annular thermal insulation for high temperature pipe applications that include lateral or axial movement may be used.

Should the criteria requirements for the specific penetration seal exceed the design ratings of the tested assembly, a substitute will be adequate to withstand the hazards associated with the area, based on an equivalency engineering evaluation established by a qualified fire protection engineer. Fire endurance and performance qualification testing of the products, assembly or portions thereof may be performed to support the equivalency engineering evaluation. Appropriate test methodology and acceptance criteria will be established for the proposed equivalent penetration seal assembly construction. ASTM E 814 Standard Test Method for Fire Tests of Through-Penetration Fire Stops, 1994 edition and NFPA 251 Standard Methods of Tests of Fire Resistance of Building Construction and Materials, 2006 edition will be used as appropriate. STP structural fire barriers and penetration fire barriers testing and qualifications, fire endurance testing methods and acceptance criteria are consistent with Regulatory Position C.4.2.1.5 in RG 1.189, Revision 1.

9.5.13.8 Diesel Generator Requirements

The following site-specific supplement addresses COL License Information Item 9.25.

(1) Diesel Generator procedures will be provided that require loading of the engine up to a minimum of 40% of full load (or lower per manufacturer's recommendation) for 1 hour following up to 8 hours of continuous no-load or light-load operation. (COM 9.5-8)

(2) The vendor-specific design for the Diesel Generator Starting Air System will be reviewed to assure it meets NUREG/CR-0660 Recommendations 2.a and 2.b. All contactors and relays will have dust tight enclosed contacts of the bifurcated type as manufactured by Struthers-Dunn or equal. All contactors and relays for the Diesel Generator equipment will be enclosed in dust-tight steel cabinets having fully gasketed doors and other openings. Other equipment which may have louvers for ventilation, such as the static exciter cabinets, will also have dust-tight gasketed doors and filter equipped louvers of sufficient number for proper cooling and protection of the field flasher contacts.

STP will adhere to NUREG/CR-0660 Recommendation 2.d by periodically wetting the ground where construction work is being done adjacent to an operating power plant to reduce blowing dust and dirt.

STP will adhere to NUREG/CR-0660 Recommendation 5 by using concrete or masonry type paint on the floors of all rooms of the Diesel Generator units which may house any electrical contactors, relays, circuit breakers or other devices having electrical contacts which are part of the Diesel Generator systems. (COM 9.5-9)

(3) See Subsection 8.3.4.2 for a discussion of diesel generator no-load or low-load operation.

9.5.13.9 Fire Protection Program for Protection of Special Fire Hazards Exposing Areas Important to Safety

The following site-specific supplement addresses COL License Information Item 9.26.

Applicable fire protection program elements for the Main Transformer, Equipment Entry Lock, Fire Protection Pump House and Ultimate Heat Sink comply with Regulatory Position C.7 in RG 1.189, Revision 1. Applicable fire protection program elements include, but are not limited to, the control of combustibles, incorporation of fire protection systems and features into the facility design, fire related administrative controls and pre-installation and post-installation inspections and testing.

(1) Outdoor oil-filled main transformers have oil spill confinement features or drainage away from the buildings. Transformers are located at least 50 feet from the building, or building walls within 50 feet of oil-filled transformers have no openings and have a fire resistance rating of at least 3 hours. Flammability rating of the transformer oil is the best available in the industry. Oil-filled transformers are also protected by a fixed deluge water spray system in accordance with NFPA 15, Water Spray Fixed Systems for Fire Protection.

(2) Equipment Entry Lock or Large Component Entrance Building, shown in ABWR DCD Figure 1.2-8, Reactor Building Arrangement Plan at Elevation 12300mm, is a 3-hour fire resistant structure adjacent to but independent from the Reactor Building. The airlock door between the Equipment Entry Lock and the Reactor Building is airtight and fire resistant. The Large Component Entrance Building is protected by fire detection and alarms to annunciate a fire condition at the Main Control Room and automatic water sprinkler. Fire administrative controls will be implemented for access control and combustible storage in the building to assure that in-situ combustible loading is negligible and transient combustibles are reduced. Administrative Controls prevent potential ignition sources.

(3) The Fire Protection Pump House is located remote from any structures onsite and is therefore protected from the effects of a fire, should it occur. The electric motor-driven fire pump is separated by a 3-hour fire barrier from the diesel engine-driven fire pump installation, so the fire pumps are not subject to a common failure due to a single fire event inside the pump house. The fire protection pump house is protected by automatic water sprinklers, in addition to a fire detection and alarm system that annunciates a fire event in its incipient stage in the Control Room. Fire pumps installation and post-installation periodic inspections and testing comply with Regulatory Position 3.2.2 in RG 1.189, Revision 1 and applicable NFPA Standards.

(4) The Ultimate Heat Sink (UHS) consists of three redundant trains of counterflow mechanically induced draft cooling towers. The cooling towers have a substantial reinforced concrete housing construction with non-combustible fill. The cooling towers are located with a significant physical separation distance from any structures onsite so that the UHS will not see the impact of a fire, should it occur. Wildfire hazards do not exist at the STP 3 & 4 site. Fire protection of the UHS is in accordance with NFPA 214, Standard for Water-Cooling Towers. The RSW pump house is provided with area fire detection in accordance with NFPA 72, National Fire Alarm Code, with manual fire protection provided by portable fire extinguishers located and installed per NFPA 10, Standard for Portable Fire Extinguishers. Additional manual fire fighting protection is also provided by area yard hydrants located and installed per NFPA 24, Standard for the Installation of Private Fire Service Mains and Their Appurtenances.

See Subsection 9.5.13.18 for discussion of safe shutdown following a complete burnout of a fire area/division.

9.5.13.10 HVAC Pressure Calculations

The following standard supplement addresses COL License Information Item 9.27.

HVAC systems described in ABWR DCD Subsection 9.5.1.1.6 are designed with features for the dual purpose of HVAC and smoke control. The building HVAC system, when operating in smoke removal mode, is designed and calculated to achieve

directional flows into the smoke removal path in order to preclude migration of products of combustion into clean areas external to the fire-affected area.

~~HVAC pressure calculations that establish ambient pressure distribution within the building spaces exist following HVAC equipment procurement and as-built ductwork routing. The pressure calculations incorporate HVAC ducted and non-ducted inter-compartment HVAC airflows and the resulting ambient pressurization. In-filtrations or ex-filtrations through cracks and openings are addressed in the calculations.~~ The method described in Appendix A of NFPA 92A will be used to determine the required differential pressure valvue during the detailed design phase. (COM 9.5-10)

A pre-operational test procedure and acceptance criteria, as recommended in NFPA 92A Chapter 4 to confirm the capability of the smoke control mode of the HVAC systems as designed and calculated will be developed. Pre-operational testing of HVAC systems, that includes verification of its performance and confirmation of the required differential pressure in smoke removal mode will be performed prior to fuel load. (COM 9.5-17)

9.5.13.11 Plant Security Systems Criteria

The following site-specific supplement addresses COL License Information Item 9.28.

The evaluation to ensure that the plant security system design does not create the potential for adverse impacts on plant operations, testing, and maintenance and that communications coverage with security alarm stations, is accomplished as a component of the in-process engineering design effort and specification development for the plant security systems.

This evaluation will depend in part on a program for issuance and control of vital area keys to those operations personnel relied upon for unrestricted plant access for both normal and emergency local operation including access by members of the fire brigade. When necessary, operations personnel provided vital area keys are available to support other departments in achieving timely access for emergency maintenance, testing and health physics activities.

Communications coverage from all areas of the nuclear island to the central and secondary alarm stations will be evaluated and, to the extent practical, provided. Based on STPNOC experience with Unit 1 & 2 there are a limited number of areas, such as high radiation areas or inside the inerted primary containment, where communications coverage is not practical. (COM 9.5-16).

Relevant design provisions include:

- The potential for use of portable security radios to interfere with plant monitoring equipment or for electromagnetic interference to adversely impact the as-built security alarm or access systems is addressed as part of the comprehensive Electromotive Compatibility (EMC) compliance plan discussed in Tier 1 Section 3.4.B and associated ITAAC in Table 3.4, Design Commitment No. 12.

- The STP 3 & 4 design utilizes the alternate AC combustion turbine generator (CTG) to provide emergency backup power to security lighting in the minimum isolation zone and the protected area. The CTG and related auxiliaries, including fuel oil tanks, are located wholly within the protected area and are therefore not subject to sabotage from outside the protected area. No additional evaluation is required.

9.5.13.12 Not Used

9.5.13.13 Diesel Fuel Refueling Procedures

The following standard supplement addresses COL License Information Item 9.30.

Procedures to verify that the day tank is full prior to refilling the storage tank will be developed following procurement of equipment but prior to fuel load. This procedure will reduce the possibility of sediment obstruction of fuel lines and harmful impacts on diesel generator operation. (COM 9.5-11)

9.5.13.14 Portable and Fixed Emergency Communication Systems

The following site-specific supplement addresses COL License Information Item 9.31.

The design of the portable radio communication system and the fixed emergency communication system complies with BTP CMEB 9.5-1, position C.5.g (3) and (4) as discussed below.

Emergency communications for STP 3 & 4 are discussed in the Emergency Plan. The communication system is designed in such a way that at any given moment, adequate onsite and offsite portable and fixed communication means are available for both normal and emergency conditions. The STP 3 & 4 communication system consists of the following systems and special equipment and communication lines:

Telephone System

This system provides a means for routine and emergency communications between plant personnel, and with outside agencies for safe plant operation, fire fighting administration, and shutdown of the plant. Includes onsite PBX (private branch exchange) telephone system, private business lines, trunk connections with local telephone utility central office, multiplexed telephone circuits through the CenterPoint Energy private regional microwave system, two EPBX (electronic private branch exchange) switching facilities in Nuclear Support Center (NSC) and the Emergency Operations Facility (EOF). Each fire area containing safe shutdown equipment shall, as a minimum, have one fixed telephone.

Portable Radio Communications System

This system is comprised of two way radio and radio paging systems. The two way radio system provides wireless communications within the plant, and with offsite agencies for safe operation, fire fighting, security, administration, and shutdown of the plant. The radio paging system provides radio paging to individuals or groups in one or more or all plant areas simultaneously. The plant portable radio communications

system interfaces with the security system by providing communications for various security areas at the plant. Design of the plant portable radio communications system precludes interference with the communication capabilities of the plant security force.

The two way radio system consists of repeater base stations, control base stations, mobile radio units, hand-held portable radio units, and a lossy loop antenna system. A lossy loop antenna system is provided for radio coverage within power block buildings. In the event of major failure of any repeater, a talk-around channel is provided on control base stations, mobile units, and hand-held portables. This allows limited direct unit-to-unit communication between control bases, mobile units, and portables. Portables that must be used in high noise level areas (90 db ambient) are provided with a jack, plug, and noise cancelling headsets. Fixed repeaters installed to permit use of portable radio communication units are protected from exposure fire damage.

The radio paging system consists of paging transmitters, counter top paging terminal, and portable pocket pagers. Lossy loop antennas and repeaters are utilized to provide paging coverage within the power block. A paging call can be initiated by an attendant through a countertop paging terminal. In addition, a paging terminal telephone interface allows designated individuals with specified telephone instruments the capability to select and call any pocket pager unit.

Microwave System Interface

Microwave equipment at STP 3 & 4 is part of the system wide Reliant Energy Microwave System. The microwave system provides offsite access to Reliant Energy telephone system, dispatcher, corporate offices, paging system; and to outside agencies. It interfaces with the STP 3 & 4 telephone system, selected dedicated lines and two-way radio system.

Public Addressing (PA) Paging/Alarm System

This system provides a means for plant wide broadcasting of routine and emergency information, such as fire alarms, the Reactor Containment Building (RCB) evacuation alarm, and the Perimeter Evacuation or Radiation Emergency Alarm. PA system (see Subsection 9.5.2.2.1) may be accessed from any Operator Communication Panel (OCP) or any plant telephone by using a valid authorization code. Plant emergency and fire alarm signals are routed through the PA system. Designated alarm actuation pushbuttons are provided on OCPs.

Maintenance Jack System (DC/Sound-Powered)

This system provides for communication among personnel performing periodic maintenance, emergency safe shutdown and fire fighting operations. This is accomplished through the location of maintenance jack stations at selected locations throughout the plant. Each jack station consists of two or three jacks for use with electrosound telephones and one jack that is reserved for sound powered telephones. A sectionalizing panel is provided in the control room of each unit to patch phone jacks together to establish communications between areas as necessary. Each fire area shall, as a minimum, have one sound powered phone jack.

Refueling Communications System

This system provides a direct and exclusive means of communications between the control room operator and designated points in the Fuel Handling and Reactor Containment Buildings during fueling and refueling operations. Primary communications for fueling and refueling activities is by wireless headset system. Two DC-powered jacks and sound-powered circuit similar to the maintenance jacks are available at each station for backup. Telephone circuits and two-way radios are also usable if needed for refueling communications.

Operator Communications Panel Consoles (OCP)

OCPs provide plant operators with access to onsite/offsite telephone systems, two-way radio channels, radio pager system, activation of the plant emergency and fire alarm signals, and the public address system. OCPs are installed in the control rooms, auxiliary shutdown panel rooms, operation support centers, technical support centers, emergency operations facility, security force supervisor's office, simulator, maintenance office facility, and central and secondary alarm stations. The OCPs located in the central and secondary alarm stations support normal day-to-day and emergency communications requirements by providing security operators with access to onsite/offsite telephone systems, radio channels assigned to security, and the PA paging system.

Special Service Telephone Lines

This system provides offsite direct access to NRC, state and county authorities, and to other nuclear plants during declared emergency. These telephone lines bypass the onsite PBX system and routed directly to specific telephones located in critical areas of the plant and support facilities. Special service (emergency) telephones are color-coded ("Red Phone") to distinguish them from normal telephones. Special Service Telephone Lines include the following: Emergency Notification System (ENS) – a telephone circuit provided by the NRC for notification of the declared emergency and to maintain voice communication with the NRC operations center; Health Physics Network (HPN) - a telephone circuit provided by the NRC for communications with the NRC Health Physics Section and /or other nuclear power plants during a declared emergency; State/County ringdown line – provided to notify State and County officials of a declared emergency.

9.5.13.15 Identification of Chemicals

The following site-specific supplement addresses COL License Information Item 9.32.

For those fire areas utilizing liquid insulated transformers, features will be provided to prevent the insulating liquid from becoming an unacceptable health hazard to workers in the event of release of the material to the building environment. (COM 9.5-12)

There are no chemical storage areas in the Reactor or Control Buildings, except small quantities of chemicals, operations and maintenance consumables, may be stored in listed or approved cabinets and containers for immediate use. The type and location

of those materials will be identified and incorporated in the final Fire Hazards Analysis prior to fuel load. (COM 9.5-13)

9.5.13.16 NUREG/CR-0660 Diesel Generator Reliability Recommendations

The following site-specific supplement addresses COL License Information Item 9.33.

STP satisfies NUREG/CR-0660 recommendations by developing programs for training, preventive maintenance, and root-cause analysis of component and system failures. (COM 9.5-14)

9.5.13.17 Sound-Powered Telephone Units

The following standard supplement addresses COL License Information Item 9.34.

The sound-powered telephone units will be provided before fuel load for use in conjunction with the system described in Subsection 9.5.2.2.2. (COM 9.5-15).

9.5.13.18 Fire-Related Administrative Controls

The following site-specific supplement addresses COL License Information Item 9.35.

The Fire Protection Program is described in Appendix 9E~~S~~.

9.5.13.19 Periodic Testing of Combustion Turbine Generator (CTG)

The following departure and standard supplement address COL License Information Item 9.36.

STD DEP 8.3-1

(1) *For each ~~6.9~~ 4.16 Kv emergency bus (staggered among the three buses at 18-month intervals), verify the CTG starts and energizes the bus within 10 minutes and energizes all required loads (as defined in the "LOCA-Loads" section of Table 8.3-4) within 15 minutes. The steady-state CTG voltage and frequency shall be ~~≥6210 V and ≤7590 V, and ≥58.8 Hz and ≤61.2 Hz~~* 13.8 kV ± 10% and 60Hz ± 2%. *All CTG starts may be preceded by an engine prelube period.*

(2) *The operator can accomplish this from the main control room.*

(3) *One Class 1E circuit breaker and ~~one~~* four *non-Class 1E circuit breaker*s *exist and are functional between each of the Class 1E diesel generator buses and the CTG. (Note that ~~only the circuit breakers for the preselected division are racked in. The remaining two divisions have their Class 1E breakers normally racked out, as shown in Figure 8.3.1~~~~both~~ the Class 1E and non-Class 1E breakers*, which provide the connection from the CTG bus to the diesel generator buses, *are normally open and ~~they~~ have no automatic function. The operator must manually align ~~the CTG to the diesel generator buses~~* this connection.*)*

(4) Each 92 days, verify the combustion turbine generator (CTG) starts and achieves steady state voltage (~~≥6210 V and ≤7590 V~~13.8 kV ± 10%), and frequency (~~≥58.8 Hz and ≤61.2 Hz) within 2~~ 60 Hz ± 2%) in less than 10 minutes. Load the CTG to ≥90% and ≤100% of its continuous rating and operate it with this load for at least 60 minutes. All CTG starts may be preceded by an engine prelube period.

The revised test requirements are incorporated in the Technical Requirements Manual and included in testing procedures prepared prior to fuel load. The Technical Specifications include the functional testing requirements and test frequencies for the CTGs necessary to support completion times allowed in TS 3.8.1, AC Sources-Operating.

9.5.13.20 Operating Procedures for Station Blackout

The following site-specific supplement addresses COL License Information Item 9.37.

The station blackout procedure(s) will provide the direction to:

(1) Operate the Alternate AC-CTG during an SBO event

(2) Restore other plant offsite (preferred) and onsite emergency power sources as soon as possible

(3) Recover plant HVAC Systems as soon as possible to limit heat increase

(4) Provide additional core, containment, and vital equipment makeup and cooling services, as necessary

(5) Establish orderly plant safe shutdown conditions

(6) Severe weather guidelines will be developed consistent with the guidelines of NUMARC 87-00, Section 4.2.3. Deviation may be authorized from the NUMARC 87-00 criteria for grid conditions where a shutdown may increase the likelihood of a loss of offsite power.

The station blackout procedure(s) will be developed consistent with the plant operating procedure development plan in Section 13.5. (COM 1C-1)

9.5.13.21 Quality Assurance Requirements for CTG

The following standard supplement addresses COL License Information Item 9.38.

The STPNOC Quality Assurance Program Description (QAPD) referenced in Section 17.5S has incorporated the Quality Assurance requirements of Regulatory Position 3.5 and Appendix A to RG 1.155 into the QAPD Part III, Nonsafety-Related SSC Quality Control, Section 2 Nonsafety-Related SSCs Credited for Regulatory Events. These requirements are translated into implementing procedures.

Table 9.5-5 Summary of Automatic Fire Suppression Systems

Bldg.	Elev	Room No.	Fire Area	Area Name	Div	Combustible	Sprinkler System Type
PY	7350	N/A	N/A	Unit Auxiliary Transformer	ND	Oil	Deluge water
PY	7350	N/A	N/A	Main Transformer Area	ND	Oil	Deluge water
PY	7350	N/A	N/A	Reserve Transformer	ND	Oil	Deluge water
RB	-8200	133	F1300	CRD Pump Room	ND	Class III B lube oil & cables	Dry pipe, closed head
RB	12300	412	F4100	Diesel Generator A Room	D1	Fuel oil, Lube oil, & cables	Preaction foam-water
RB	12300	423	F4200	Diesel Generator B Room	D2	Fuel oil, Lube oil, & cables	Preaction foam-water
RB	12300	432	F4300	Diesel Generator C Room	D3	Fuel oil, Lube oil, & cables	Preaction foam-water
RB	23500	610	F6101	Diesel Generator Fuel Tank A Room	D1	Diesel fuel	Deluge foam-water
RB	23500	620	F6201	Diesel Generator Fuel Tank B Room	D2	Diesel fuel	Deluge foam-water
RB	23500	630	F6301	Diesel Generator Fuel Tank C Room	D3	Diesel fuel	Deluge foam-water
RW	~~1600~~ **12300**	N/A	N/A	Dry Radioactive Waste Storage Area	ND	Radioactive material	Wet pipe sprinkler
~~RW~~	~~7300~~	~~N/A~~	~~N/A~~	~~Dry Radioactive Waste Storage Area~~	~~ND~~	~~Radioactive material~~	~~Wet pipe sprinkler~~
~~RW~~	~~-200~~	~~N/A~~	~~N/A~~	~~Dry Radioactive Waste Storage Area~~	~~ND~~	~~Radioactive material~~	~~Wet pipe sprinkler~~

Table 9.5-5 Summary of Automatic Fire Suppression Systems

Bldg.	Elev	Room No.	Fire Area	Area Name	Div	Combustible	Sprinkler System Type
~~RW~~	~~6500~~	~~N/A~~	~~N/A~~	~~Dry Radioactive Waste Storage Area~~	~~ND~~	~~Radioactive material~~	~~Wet pipe sprinkler~~
TB	~~350~~ **2300**	~~120~~**N/A**	FT1500	Beneath the Turbine surroundings	ND	Lubricants~~, charcoal~~ & cables	Wet pipe sprinkler
~~TB~~	~~7350~~	~~222~~	~~FT1500~~	~~Beneath the Turbine Surroundings~~	~~ND~~	~~Lubricants, & cables~~	~~Wet pipe sprinkler~~
TB	~~7350~~ **6300**	230	FT2500	Lube Oil Conditioning Area	ND	Class III B lube oil	Deluge foam-water
TB	~~7350~~ **6300**	247	FT2503	House Boiler Area	ND	~~Lubricants, Fuel oil &~~ **Lubricants &** cables	~~Preaction~~**Wet pipe** sprinkler
TB	~~15350~~ **12300**	317 & **2X8**	FT3500	Gas Turbine Generator	ND	*Diesel fuel* **& Class III B lube oil**	Deluge foam-water
TB	~~15350~~ **19700**	~~320~~**3X2**	~~FT1500~~ **FT35X9**	~~TCW Pumps Area~~ **Hydrogen Seal Oil Skid Area**	ND	Hydrogen seal oil	Deluge foam-water
TB	**19700**	**330**	**FT3501**	**Lube Oil Reservoir Area**	**ND**	**Class III B lube oil**	**Deluge foam-water**
TB		**122**	**FT1503**	**Stairwell No. 2**	**ND**		**Wet pipe sprinkler**
TB		**249**	**FT2504**	**Stairwell No. 4**	**ND**		**Wet pipe sprinkler**
TB		**1X3**	**FT15X1**	**Stairwell No. 6**	**ND**		**Wet pipe sprinkler**
TB		**1X4**	**FT15X2**	**Stairwell No. 7**	**ND**		**Wet pipe sprinkler**
TB	**6300**	**N/A**	**FT1500**	**Beneath Turbine surroundings**	**ND**	**Lubricants & Cables**	**Wet pipe sprinkler**
TB		**114**	**FT1502**	**Stairwell No. 1**	**ND**		**Wet pipe sprinkler**
TB		**212**	**FT2502**	**Stairwell No. 3**	**ND**		**Wet pipe sprinkler**
TB		**1Y5**	**FT15Y1**	**Stairwell No. 8**	**ND**		**Wet pipe sprinkler**
TB		**250**	**FT15Y2**	**Elevator Shaft**	**ND**	**Lubricants & Cables**	**Wet pipe sprinkler**
TB	**6300**	**1Y1**	**FT15Y3**	**Lube Oil Storage Tank Area**	**ND**	**Class III B lube oil**	**Deluge foam water**
TB	**6300**	**232**	**FT1501**	**HNCW Chiller Area**	**ND**	**Lubricants & Cables**	**Wet pipe sprinkler**
TB	**6300**	**111**	**FT1501**	**Instrument & Service Air Equip.**	**ND**	**Lubricants & Cables**	**Wet pipe sprinkler**

Table 9.5-5 Summary of Automatic Fire Suppression Systems

Bldg.	Elev	Room No.	Fire Area	Area Name	Div	Combustible	Sprinkler System Type
TB	6300	1Y2	FT1501	Breathing Air Equipment Area	ND	Lubricants & Cables	Wet pipe sprinkler
TB	6300	232	FT15Y4	EHC Hydraulic Power Unit Area	ND	Class III B hyd. fluid	Deluge foam water
TB	12300	N/A	FT1500	Beneath Turbine surroundings	ND	Lubricants & Cables	Wet pipe sprinkler
TB	12300	2X5	FT25X1	CTG Switchgear Area	ND	Electrical Cables	Wet pipe sprinkler
TB	12300	210	FT25X3	Switchgear Room 'A'	ND	Electrical Cables	Wet pipe sprinkler
TB	19700	N/A	FT1500	Beneath Turbine surroundings	ND	Lubricants & Cables	Wet pipe sprinkler
TB	19700	31X-2	FT35X1	LPCP Switchgear Room	ND	Electrical Cables	Wet pipe sprinkler
TB	19700	310	FT35X8	Switchgear Room 'B'	ND	Electrical Cables	Wet pipe sprinkler
TB	19700	3X9	FT35X7	Electrical Equipment Area	ND	Electrical Cables	Wet pipe sprinkler
TB	19700	3X4	FT35X3	250VDC Battery Room	ND	Electrical Cables	Wet pipe sprinkler
TB	19700	3X5	FT35X2	250VDC Battery Room	ND	Electrical Cables	Wet pipe sprinkler
TB	19700	3X6	FT35X4	125VDC Battery Room 'A'	ND	Electrical Cables	Wet pipe sprinkler
TB	19700	3X7	FT35X5	125VDC Battery Room 'B'	ND	Electrical Cables	Wet pipe sprinkler
TB	19700	3X8	FT35X6	125VDC Battery Room 'C'	ND	Electrical Cables	Wet pipe sprinkler
TB	27800	N/A	FT1500	Above Turbine surroundings	ND	Lubricants & Cables Wet pipe sprinkler	
TB	27800	N/A	FT1500	Turbine Generator Bearings	ND	Class III B lube oil	Closed head preaction spray
TB	27800	N/A	FT1500	Beneath Turbine skirt	ND	Class III B lube oil	Wet pipe sprinkler
TB		4X5	FT45X1	Stairwell No. 9	ND		Wet pipe sprinkler
TB	38300	N/A	FT1500	Above Turbine surroundings	ND	Lubricants & Cables	Wet pipe sprinkler
TB		5X1	FT55X1	Stairwell No. 10	ND		Wet pipe sprinkler

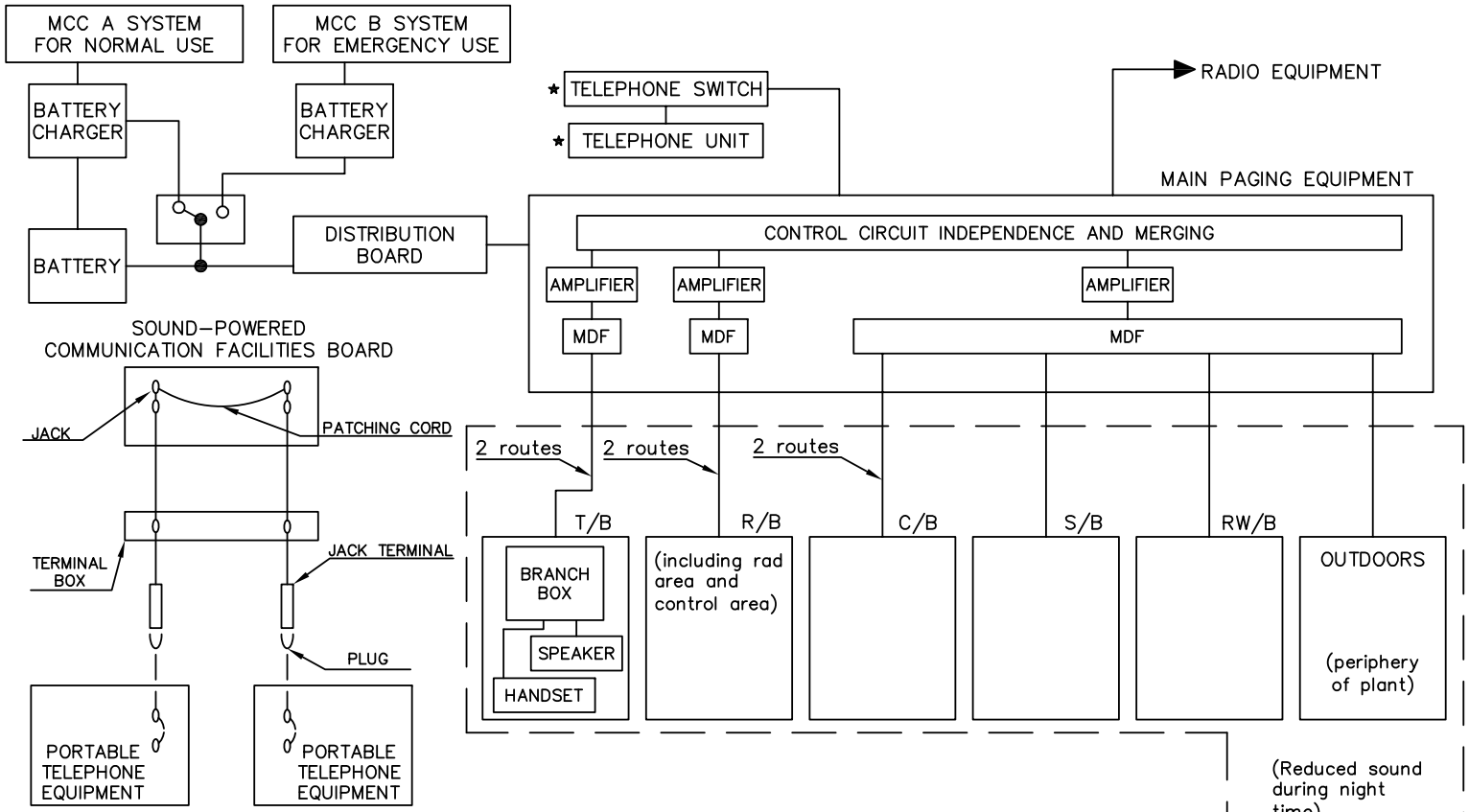

(NOTES) 1. MDF : MAIN DISTRIBUTING FRAME
~~2. SOLID LINES INDICATE THE EXTENT OF ABWR STANDARD PLANT SCOPE~~
2. DOTTED LINES SHOW THAT PART OF A UNIT'S PAGING EQUIPMENT THAT IS DUPLICATED IN THE OPPOSITE UNIT
3. ★ INDICATES EQUIPMENT THAT MAY BE SHARED BETWEEN UNITS

Figure 9.5-2 Outline - Telephonic Communication System for Single Unit of STP 3 or 4

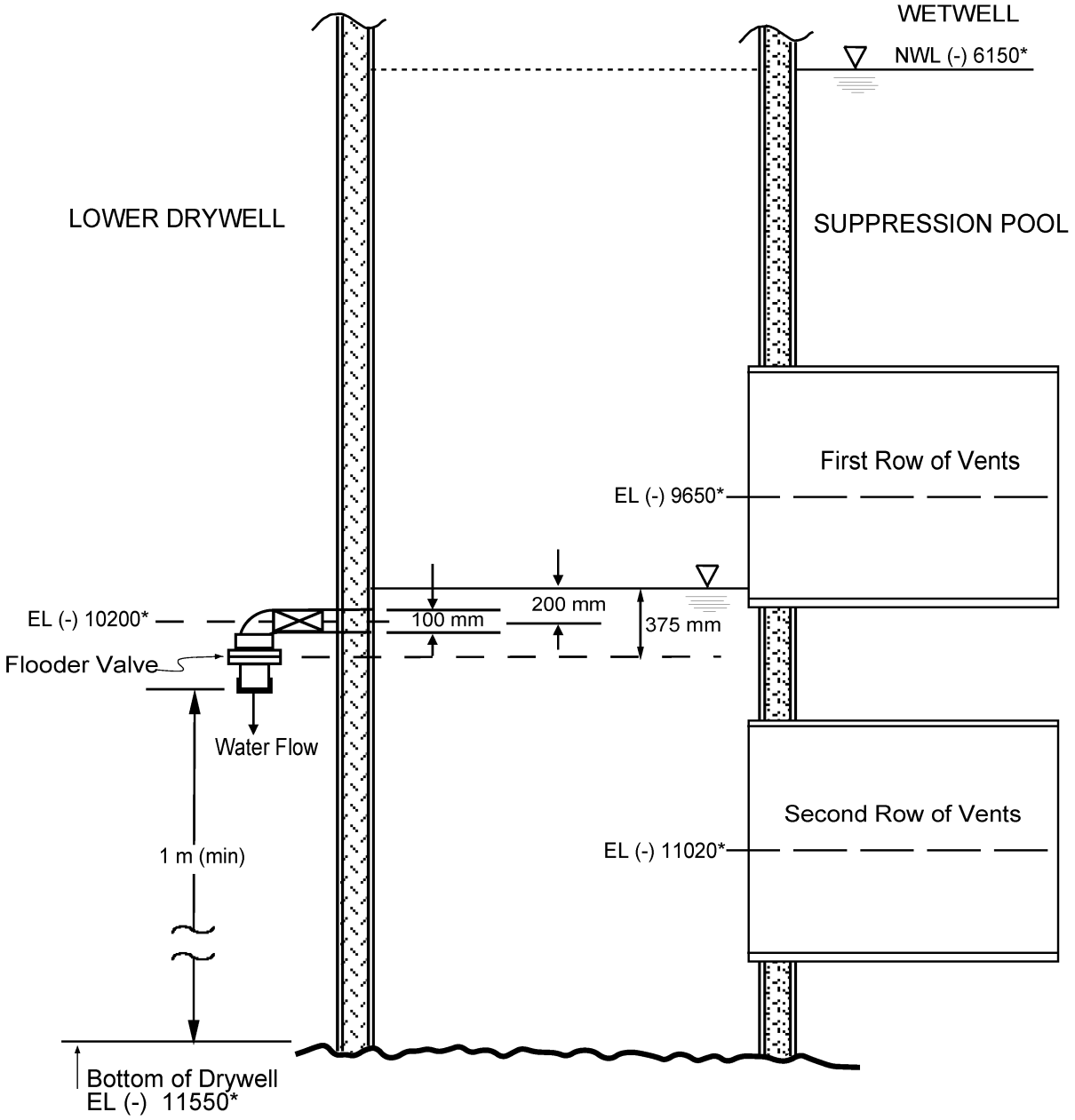

* Elevations based on RPV bottom at EL 0. All dimensions in millimeters.

Figure 9.5-3 Lower Drywell Flooder System Arrangement/Configuration

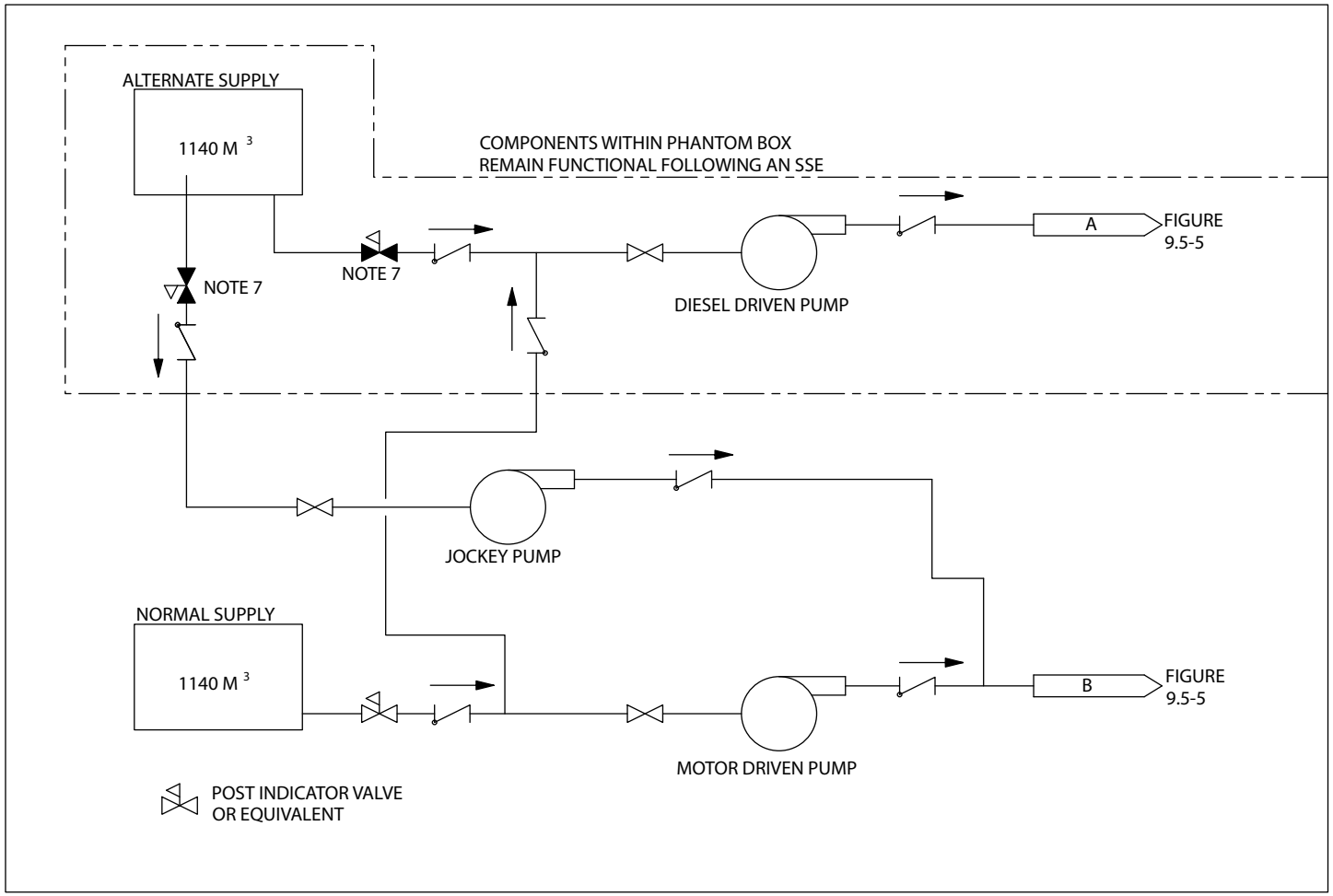

Figure 9.5-4 Fire Protection Water Supply System

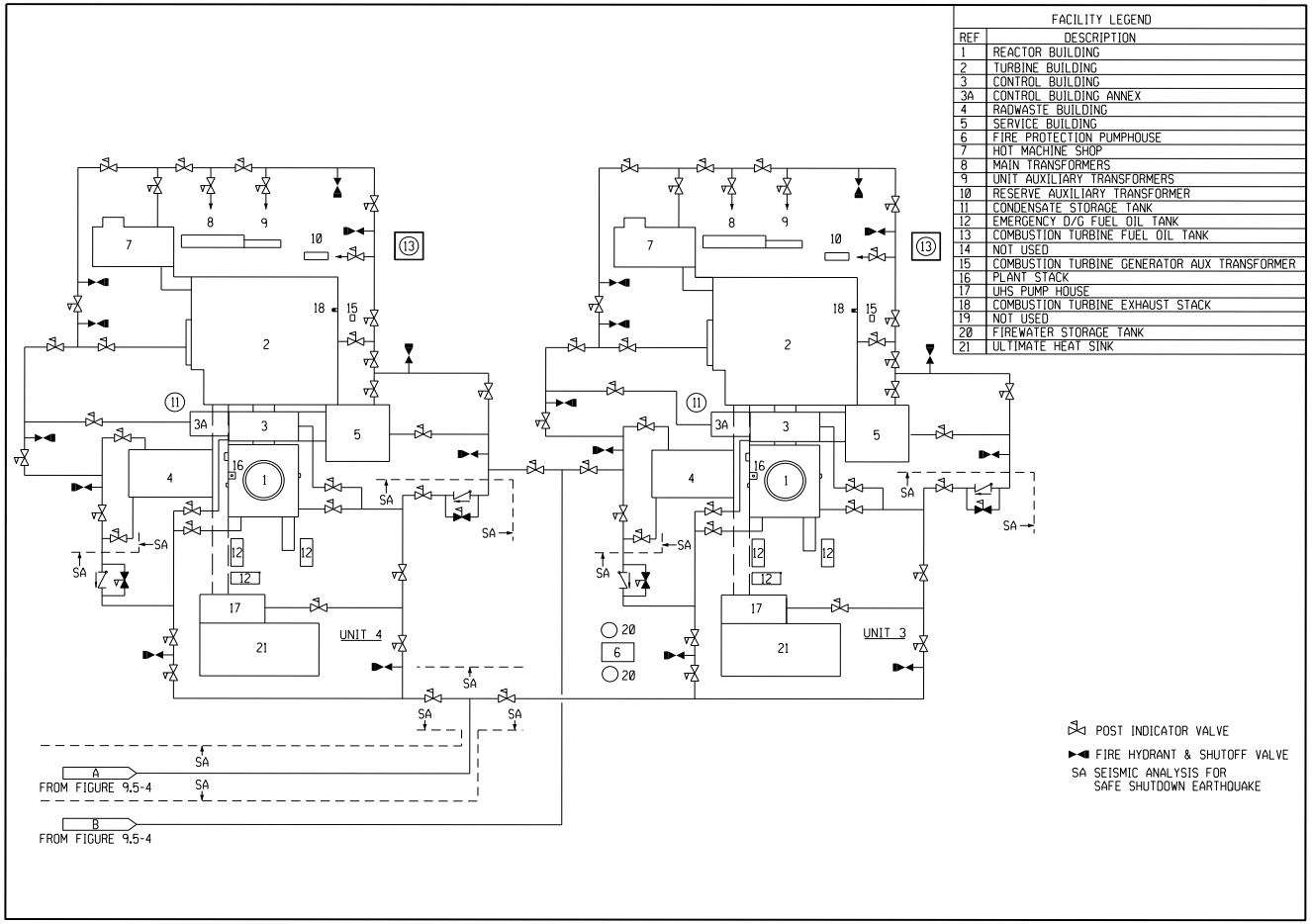

Figure 9.5-5 Fire Protection Yard Main Piping