Official Transcript of Proceedings

NUCLEAR REGULATORY COMMISSION

Title: Advisory Committee on Reactor Safeguards
576th Meeting - Open Session

Docket Number: (n/a)

Location: Rockville, Maryland

Date: Thursday, October 7, 2010

Work Order No.: NRC-474 Pages 1-281

NEAL R. GROSS AND CO., INC.
Court Reporters and Transcribers
1323 Rhode Island Avenue, N.W.
Washington, D.C. 20005
(202) 234-4433

DISCLAIMER

UNITED STATES NUCLEAR REGULATORY COMMISSION'S
ADVISORY COMMITTEE ON REACTOR SAFEGUARDS

The contents of this transcript of the proceeding of the United States Nuclear Regulatory Commission Advisory Committee on Reactor Safeguards, as reported herein, is a record of the discussions recorded at the meeting.

This transcript has not been reviewed, corrected, and edited, and it may contain inaccuracies.

UNITED STATES OF AMERICA

NUCLEAR REGULATORY COMMISSION

+ + + + +

576TH MEETING

ADVISORY COMMITTEE ON REACTOR SAFEGUARDS

(ACRS) - OPEN SESSION

+ + + + +

THURSDAY, OCTOBER 7, 2010

+ + + + +

ROCKVILLE, MARYLAND

+ + + + +

The Committee met at the Nuclear Regulatory Commission, Two White Flint North, Room T2B1, 11545 Rockville Pike, at 8:30 a.m., Said Abdel-Khalik, Chairman, presiding.

COMMITTEE MEMBERS:

SAID ABDEL-KHALIK, Chairman

J. SAM ARMIJO, Vice Chairman

JOHN W. STETKAR, Member-at-Large

SANJOY BANERJEE, Member

DENNIS C. BLEY, Member

MARIO V. BONACA, Member

CHARLES H. BROWN, JR., Member

MICHAEL L. CORRADINI, Member

HAROLD B. RAY, Member

COMMITTEE MEMBERS:

JOY REMPE, Member

MICHAEL T. RYAN, Member

WILLIAM J. SHACK, Member

JOHN D. SIEBER, Member

ACRS STAFF PRESENT:

EDWIN M. HACKETT, Executive Director

KENT HOWARD, Designated Federal Official

GIRIJA SHUKLA, Designated Federal Official

KATHY WEAVER, Designated Federal Official

PETER WEN, Designated Federal Official

GANESH CHERUVENKI

TIMOTHY COLLINS

AMY CUBBAGE

STEPHEN DINSMORE

CLIFF DOUTT

DON DUBE

RICHARD DUDLEY

BART FU

MELANIE GALLOWAY

DENNIS GALVIN

BRIAN HARRIS

ALLEN HISER

BRIAN HOLIAN

WILLIAM HOLSTON

ACRS STAFF PRESENT: (cont.)

JOHN MCKIRGAN

BO PHAM

ROBERT PRATO

RICHARD RASMUSSEN

WILLIAM RULAND

ABDUL SHEIKH

DINESH TANEJA

ROBERT TREGONING

HANRY WAGAGE

ALSO PRESENT:

J. ALAN BEARD, GEH

DAVE BREMER, NPPD

DAN BUMAN, NPPD

SKIP BUTLER, GEH

CHRISTOPHER COSTANZO, DAEC

JERRY DEAVER, GEH

JESUS DIAZ-QUIROZ, GEH

MIKE FAIRCHILD, DAEC

KEN KLEINHEINZ, DAEC

PHIL LEININGER, NPPD

WAYNE MARQUINO, GEH

ERIC NELSON, NPPD

BRIAN O'GRADY, NPPD

KEN PUTNAM, DAEC

ALSO PRESENT: (CONT.)

ERIC SORENSON, DAEC

KEN THOMAS, NPPD

ART ZAREMBA, NPPD

C-O-N-T-E-N-T-S

Opening Remarks by the ACRS Chairman 4
Final Safety Evaluation Report Associated with
Boiling Water Reactor (ESBWR) Design
Certification Application 7
Final Safety Evaluation Report Associated with
the License Renewal Application for the
Cooper Nuclear Station 89
Final Safety Evaluation Report Associated
with the License Renewal Application
and for the Duane Arnold Energy
Center 141
Draft Final Rule for Risk-Informed Changes
to Loss-of-Coolant Accident (LOCA)
Technical Requirements (10 CFR 50.46a) 217
Adjournment 281

P-R-O-C-E-E-D-I-N-G-S

8:29 a.m.

CHAIRMAN ABDEL-KHALIK: The meeting will now come to order. This is the first day of the 576th meeting of the Advisory Committee on Reactor Safeguards. During today's meeting, the Committee will consider the following:

1. Final Safety Evaluation Report Associated with the Economic Simplified Boiling Water Reactor Design Certification Application.

2. Final Safety Evaluation Report Associated with the Licensed Renewal Application for the Cooper Nuclear Station.

3. Final Safety Evaluation Report Associated with the License Renewal Application for the Duane Arnold Energy Center.

4. Draft Final Rule for Risk-Informed Changes to Loss-of-Coolant Accident Technical Requirements, 10 CFR 50.46a.

5. Preparation of ACRS Reports.

This meeting is being conducted in accordance with the provisions of the Federal Advisory Committee Act. Ms. Kathy Weaver is the Designated Federal Official for the initial portion of the meeting.

Portions of the session dealing with the final Safety Evaluation Report associated with the ESBWR design certification application may be closed to protect information designated as propriety to GEH.

We have received one written comment from Mr. Farouk Baxter regarding the final Safety Evaluation Report associated with the ESBWR design certification application. We have received no requests for time to make oral statements from members of the public regarding today's sessions. There will be a phone bridge line.

To preclude interruption of the meeting, the phone will be placed in a listen-in mode during the presentations and Committee discussions. A transcript of portions of the meeting is being kept and it is requested that the speakers use one of the microphones, identify themselves and speak with sufficient clarity and volume so that they can be readily heard.

I will begin with some items of current interest. Dr. Joy Rempe is now an official Member of ACRS and we would like to welcome her to the Board.

(Applause.)

Dr. Rempe brings over 30 years of experience in nuclear engineering to her new position

as an ACRS member. Her broad range of experience includes extensive work with both industry and national laboratories. She is recognized by her national and international peers for her work in the areas of severe accident phenomena, radionuclide release and transportation, high temperature testing and in-pile high temperature instrumentation.

Dr. Rempe's professional service activities include present membership on the Board of Directors for the American Nuclear Society. Additionally, she has been on several Advisory Committees including the DOE Nuclear Energy Research Advisory Committee from 1998 to 2005. Dr. Rempe has published over 70 journal articles and has delivered over 65 technical presentations world-wide.

Dr. Remple holds both master's and doctoral degrees in nuclear engineering from MIT and a Bachelor of Science in nuclear engineering from the University of Missouri Rolla. Welcome.

Ms. Jocelyn Mitchell of the NRC staff recently passed away after a year-long struggle with cancer. She served as the Senior Technical Advisor for Consequence Analysis in the Division of System Analysis. She also worked with the ACRS and the ACNW for a number of years as our liaison with the Office

of Nuclear Regulatory Research. We will be sorrily missed.

We will now proceed with Item 2 on the agenda, Final Safety Evaluation Report for the ESBWR. Dr. Corradini will lead us through that discussion.

Mike?

MEMBER CORRADINI: Thank you, Mr. Chairman. So we've come to the point now after a number of Subcommittee meetings and full Committee meetings and interim letters that we are going to discuss for the final time, the anticipated final time, ESBWR.

What I've done, to remind the members that weren't in attendance, we had subcommittee meetings since the 575th full Committee meeting in September, primarily discussing control room habitability and digital I&C, closing out Members' questions, final clarifications. And we had a subcommittee meeting yesterday, I guess, on AIA and final questions related to hydrogen in Chapter 6 for containment response.

What I've asked GEH and the staff to do, so don't blame them, you can blame me, is that to focus on the last open item which was part of Chapter 6 relative to hydrogen and also the digital I&C. Based on our closed meeting yesterday for AIA, nothing

in my opinion rose to the level that we need to discuss in any detail here. Therefore, this complete session at the moment is open. If we have questions that delve into details of digital I&C that have to go closed, I'm going to look to GEH to give us a warning flag and we can postpone that discussion to the end of the two hours and close the meeting and assess that, if necessary.

So with that I'll turn to Amy Cubbage to tell everybody what I forgot.

MS. CUBBAGE: I don't have anything to add. I'm just pleased to be here. This has been a tremendous effort on the part of the staff to get to this point. Some of the staff members are present. Many, many more are not here, so I'd just like to recognize that effort and go ahead and turn it over to GEH.

MEMBER CORRADINI: So Wayne or Jerry, some of the recognized faces, which one of you is going to kick it off?

MR. DEAVER: I'm going to be the spokesman.

MEMBER CORRADINI: Okay, Jerry.

MR. DEAVER: As stated, we'd like to cover the issue associated with RAI 6.2-202. So you can go

to the next slide.

(Slide change.)

Basically, the question asked what about the possibility of cumulating combustible concentrations of hydrogen and oxygen in the PCCS which is the passive containment cooling system and the ICS system which is the isolation condenser system.

In our response, we demonstrated that the PCCS, it's possible to accumulate hydrogen and oxygen at low pressures and as such, there was the possibility of a detonation. What we did was we made it robust such that it could withstand a detonation. So most of our efforts were focused on making it strong enough.

In addition, we added a catalyst to the bent line because it likewise could have high concentrations of hydrogen and oxygen, but that catalyst prevents the potential conditions which would lead to a detonation. And for the risk -- for the severe accident scenario, we have igniters in the lower drum of the PCCS which will circumvent ignition also.

MEMBER BANERJEE: Is there any chance the catalyst will get wet?

MR. DEAVER: The catalyst will certainly get wet.

MEMBER BANERJEE: And it will operate?

MR. DEAVER: Yes, it will. We'll go through it, we'll walk you through the equipment qualification program where we tested for loads and environment and so forth.

MEMBER BANERJEE: It's not a platinum catalyst?

MR. DIAZ-QUIROZ: Platinum or rhodium.

MEMBER BANERJEE: And these work when they get wet?

MR. DIAZ-QUIROZ: There's been -- EPRI did do testing with a catalyst and they did various type of what they would call inhibitors or poisons. One was water and it does show to dry up over time.

MEMBER BANERJEE: It dries up.

MR. DIAZ-QUIROZ: It dries up. As soon as you start to recombine, you start to heat it up.

MEMBER CORRADINI: This was, I think, I don't remember the subcommittee, but in July, I think July 13th --

MEMBER BANERJEE: I'm not a member of your subcommittee.

MEMBER CORRADINI: I know that, but we

always welcome you. But I think at that time actually Dana was present and I think he confirmed from at least our standpoint that with just a little bit of initiation of the reaction, you get a very quick drying out of the catalyst and things work pretty well.

MEMBER BANERJEE: Okay.

MEMBER CORRADINI: Before we go back to the presentation, the other thing I mentioned relative to how I instructed the staff and suggested to GEH that all of the open items are closed, so I focused mainly on things that we had discussed, a post long-term cooling which was our letter in September. So I'm sorry, go ahead, Jerry.

MR. DEAVER: Okay, so --

MEMBER BANERJEE: And there's no chance of one detonation being followed by another and another, multiple detonations?

MR. DEAVER: Yes, there will be multiple detonations if the conditions accumulate.

MEMBER BANERJEE: So this system will be able to withstand multiple detonations?

MR. DEAVER: Yes. Yesterday, we presented a case for the maximum number of detonations which would be 100, but that's at a lower pressure and so

the stresses are not as high. But for the bounding case, we postulated 12 events and for each one of those events, we're conservatively assuming 50 cycles associated with the one event. So what we've designed for is 600 full bounding cycles of a detonation.

And for the ICS system, what we've done for the LOCA condition, we isolate system and I'll go into more detail in the next slide. And then we have the non-LOCA event. In the non-LOCA event, our solution is in order to avoid high concentrations of hydrogen and oxygen is to vent the system using the lower header vent lines which already exist. An accumulation of hydrogen and oxygen is such that we don't need to do that immediately. Our plan is to initiate that at six hours into the event and we use a restricting flow orifice in order to limit the reduction in inventory in the reactor itself.

So we by operating the system, venting the system at six hours, we prevent any conditions such that would reach a flammability limit for any of the non-LOCA conditions.

For the LOCA case, there what our plan is is to isolate totally the system after the depressurization valves are opened up. At this point, the vessel is venting, depressurizing rapidly and at

that point we close off, isolate the isolation condenser itself. This minimizes the accumulation of radiolytic gases in the system and at that point the system, the condenser itself starts to depressurize due to the cooling that outside water provides and we have shown that our design pressure for the condenser itself bounds any conditions that would cause detonation in the condenser itself. There is a brief period of time when that could occur and so the conditions will never reach a case where we'll exceed the design pressure of the IC unit.

Going forward, in the PCCS, as I mentioned earlier, we designed the system to be robustly designed to withstand hydrogen/oxygen detonations. We used a bounding mixture of hydrogen and oxygen. What happens is as the steam condenses, the hydrogen/oxygen will accumulate mainly in the lower portion of the tubes and in the lower drum.

Why don't you go to the next slide? We'll look at the geometry.

(Slide change.)

This is the geometry of the PCCS condenser. The areas of prime interest were the tubes that span between the upper and lower headers' drums, and that's where the water condenses and hydrogen can

accumulate in the lower portion of the tubes and then the lower drum can likewise fill with hydrogen and oxygen. And then the drain lines from each of the lower drums, they likewise can accumulate hydrogen and oxygen. So those are the areas of primary concern to withstand the detonation pressures.

As you can see on here, we've identified the materials of the upper header and lead-in pipe are 304L and 316 stainless steel materials, but starting with the upper drum and all the way through the tubes, the lower drum, and the vent line, the drain line and the saddle supports, we've got to an XM-19 material which is a high-strength stainless steel material. So in addition to thickening the components, we've also -- we're relying on a high strength stainless steel to withstand the high-pressure loads from a detonation.

So why don't we go back to the prior slide.

(Slide change.)

CHAIRMAN ABDEL-KHALIK: I guess we talked about this yesterday, but I'm still concerned about torsional loads that result from asymmetric detonation on both sides. And if that were the case, where would be the weakest point within the entire assembly?

MR. DEAVER: Could you go to the picture?

As we discussed yesterday, the most rigid connection is the drain line connection in the center of the drum.

CHAIRMAN ABDEL-KHALIK: Right.

MR. DEAVER: The saddle supports are primarily providing vertical support and also some torsional support because they're long. So --

CHAIRMAN ABDEL-KHALIK: Would asymmetric torsional loads affect the steam line, the connection to the steam line?

MEMBER CORRADINI: You mean the middle one, Said?

CHAIRMAN ABDEL-KHALIK: Right.

MR. DEAVER: Well, the piping, you have the middle pipe which then branches to the two headers with the tubes and the whole assembly. There's enough flexibility in the system such that that pipe isn't significantly --

MEMBER CORRADINI: Can I ask the next question? So where is the peak stress if I had a torsional load? Is it at the drain line or the steam inlet? That's another way of asking the question I would think.

MR. DIAZ-QUIROZ: It's at the drain line. The drain line takes the brunt of the detonation

load.

MR. DEAVER: Well, the saddles will see them also, but --

MEMBER CORRADINI: Right, but from yesterday, what Dr. Abdel-Khalik was, I think, most concerned about is if there's a torsional load, where would be the peak stress and if I remember correctly.

CHAIRMAN ABDEL-KHALIK: Because you can have asymmetric detonation on both sides.

MR. DEAVER: Well, what you have to recall is the center support structure, it attaches up at the upper drum, so what you've got is a very solid structure that's holding the whole upper part of the condenser.

CHAIRMAN ABDEL-KHALIK: This is really just intuition, right? I mean have you done an analysis that looks at these torsional loads with asymmetric detonations on both sides?

MR. DIAZ-QUIROZ: When you look at what's being transmitted up through the tubes to the upper drum upper header, you don't see much of any reaction loads being transmitted. It remains at the bottom where you have the stiffest member which is the drain line. And so the drain line restrains the lower drum, so you do have shaking that occurs at the top, but

it's dampened out. So as far as transmitting loads across to the other unit --

CHAIRMAN ABDEL-KHALIK: Well, you're not transmitting loads across the other unit.

MR. DIAZ-QUIROZ: Right.

CHAIRMAN ABDEL-KHALIK: We're talking about asymmetric loads where you have simultaneous explosions in both units at two axially different locations that generate a torsional load.

MR. DIAZ-QUIROZ: When we look at the one and look at what's being transmitted as far as it going up, it would be the same on the other side. And so it's not that they're combining to add additional load to the top or to the bottom of the drums.

MR. DEAVER: Let me describe our model. We had a model with just one side, included all the components, including the upper header and a steam line that comes in. As you get to the other side, then we just terminated the model at the pipe, but we did -- the results did provide all the motion and deformation associated with that part of that half of the system.

CHAIRMAN ABDEL-KHALIK: But if you really do a model that includes only one side, can you realistically address this torsional loading issue

with a one-sided model?

MR. DEAVER: The condition that we're looking at is worst case where we're detonating right at the end plate itself and then proceeding all the way to the other end. And that's what's then trying to shake the structure. So that's a symmetrical situation. We've studied the distortions associated with that event. That's the worst case that we can think of as to how to analyze that structure.

MEMBER CORRADINI: Just repeat what you said so I understand. So what you're saying is is that when you did one side, the other side, the boundary condition of the other side was essentially rigid, over-effective. That's what I was trying to understand.

MR. DEAVER: It was a free end.

MEMBER CORRADINI: Okay.

MEMBER ARMIJO: Jerry, just before you go, I thought I understood this design, but I obviously don't. If I look at your drawing there, you have the vent line and the drain line. To me they look like the same thing, but they're different materials.

MR. DEAVER: Right.

MEMBER ARMIJO: Why is that?

MR. DEAVER: This drawing is to scale, so

when you look at it and you look at the left side where the vent lines are being called out, that's the inner pipe.

MEMBER ARMIJO: Yes.

MR. DEAVER: And then the flange itself, if you start to look at it, there is a gap between that line and flange. So there is an annular cross sectional area right there that does drain out.

MEMBER CORRADINI: If you remember, Sam, there's a pipe in a pipe.

MEMBER ARMIJO: Yes.

MEMBER CORRADINI: So that the liquid goes out the annulus and the gases come through a top hat through the catalyst to the wet well.

MEMBER ARMIJO: That clears it up. Thank you.

MR. DEAVER: So for the bounding mixture of hydrogen/oxygen, we conservatively bounded the detonation load which include several factors and I think that's a key point in this dynamic analysis that we did. After we did the main analysis, then we added two and a half, a factor of two and a half to it to increase the load, to cover reflection loads and dynamic factors. So all in all, it's a very conservative analysis.

And we didn't assume any damping, so it was a very conservative analysis. The detonations we assumed, as I mentioned earlier, in the lower part of the tubes, the lower header and the drain line and as mentioned, we have the catalyst module which is in the inner pipe which is the drain line and at the entrance we have the catalyst module which inserts inside the pipe.

As I mentioned earlier, we designed for a total of 600 cycles. Typically, what happens when you have a detonation is you have one cycle that's very high to begin with and then it starts to dampen out. But to be conservative, we assumed many cycles associated with each detonation. And as I covered on the other slide, we made material changes to the XM-19 material, plus we increased most of the components. The tubes were thickened. The lower drum was thickened. The drain line and the saddles were all increased in wall thickness to withstand the detonation load.

To do the analysis, because this is a containment boundary, we used the Class MC ASME as the criteria and we met the Service Level C acceptance criteria and the significance of that is that that basically keeps everything in an elastic range as far

as the analysis is concerned. And we have combined all of the pertinent loading such as the detonation along with seismic, thermal, dead weight, to come up with a bounding load. And as we performed this dynamic analysis to determine really what the reflection wave and the associated loads are that would occur on the support, the supports in the green line and the saddle connections.

MEMBER ARMIJO: That frame that you have there --

MR. DEAVER: Yes.

MEMBER ARMIJO: Now that's -- that combined with the saddles combined with the connections to the core give you a lot of support points for this structure.

MR. DEAVER: Yes.

MEMBER ARMIJO: How are they connected to the floor of the pool?

MR. DEAVER: Okay, what we have, we have embedded plates that are anchored into the concrete on the top slab and so the combination of this embedded late with machined holes, to put the bolts in, provides a very secure support for the structure. The liners in the pool simply meet up with these embed plates and seal the pool off such that it's all

stainless steel.

MEMBER ARMIJO: Is that frame also stainless steel?

MR. DEAVER: Yes, it is.

MEMBER ARMIJO: Okay.

MR. DEAVER: And it has similar embed plates on the floor to be able to withstand the loads.

MEMBER ARMIJO: There have been instances of leakage through bolts through the support structures, liner leakage. Have you addressed that?

MR. DEAVER: These won't be through bolts. The embed plates will be such that they'll be dead ended. There won't be a through connection.

MEMBER ARMIJO: Okay.

MEMBER SHACK: And then you'll weld the liner to the embed plate?

MR. DEAVER: Yes.

MEMBER ARMIJO: Thanks, Jerry.

MEMBER SIEBER: The embedded plate must be connected to structural steel some place.

MEMBER RAY: This is not making good sense. The liner has a cut out in it, I gather, the embed goes through, of course, to the structure.

MR. DEAVER: Right.

MEMBER RAY: Okay, so your seal around the

embed plate becomes an issue.

MR. DEAVER: Right, the embed plate will be part of the penetration too. You'll have a liner going through the penetration so it will all be welded and connected together.

I think that's -- to summarize, we have done a very thorough job of designing the PCCS under very conservative conditions of both the detonation side, determining the maximum load and the factors that apply. We have a very robust structure now with materials that will withstand the detonation. In the IC case we have sufficient controls in place to control and to monitor conditions and to prevent detonations and if they do, then they'll be isolated and there won't be any adverse conditions from a detonation.

MR. MARQUINO: We don't have an ignition source in the system. We have not identified an ignition source, but we have designed for detonation --

MEMBER STETKAR: You do have an ignition source. The igniters that are installed for severe accident mitigation. They're not designed to ignite under normal containment cooling conditions, but they are an ignition source.

MR. MARQUINO: They would operate to combust the hydrogen and oxygen on a frequency that doesn't support detonation.

MEMBER CORRADINI: But I think what he's saying is, I thought what his point is inadvertent actuation --

MEMBER STETKAR: There is an ignition source located in those lower -- should they for some reason have an inadvertent ignition -- those are by the way for the benefit of the other members who weren't at the subcommittee meeting, those are -- if I recall correctly, activated by a signal that opens the GDCS deluge lines into the lower dry well. Those lines are activated only on high temperature in a lower dry well indicating core relocation basically. So they shouldn't normally be energized.

MR. DEAVER: Even in a LOCA event --

MEMBER STETKAR: Right, as long as the temperature down below is within normal parameters, it should be okay.

MEMBER SHACK: And that's the only signal?

MEMBER STETKAR: The only one I've heard of. It's pretty hard to find drawings.

MR. DIAZ-QUIROZ: If the deluge system is activated, that means you'll have a core relocation

which produces radiolytic gas at that time in the lower drywell. Before then you have a high hydrogen rich environment because of the scenario that happens in the RPV. And so then you end up adding hydrogen, I mean oxygen in this case. That's what the severe accident scenario is really all about. Now you are inerted with hydrogen and now you're adding back oxygen to ventilate the generation at the bottom.

MEMBER CORRADINI: Now are you going to move to digital -- is that your next?

MS. CUBBAGE: No, the staff --

MEMBER CORRADINI: Or is staff supposed to come up? I don't know. Staff is next. Okay.

Bruce will be up with Henry.

MR. WAGAGE: My name is Hanry Wagage. I'm going to discuss the staff evaluation of hydrogen accumulation in PCCS and ICS. This is our review team.

ACRS has raised a concern of the possibility of hydrogen accumulation in PCCS in the November 2009 meeting. Staff calculated and saw that hydrogen concentration could go up. Staff expanded this issue to cover ICS. Regulation Guide applicable to this issue are 10 CFR 5040.6b5 and DDC38 and 50.

MEMBER BANERJEE: Hanry, the issue of

noncondensible concentrations in various locations including hydrogen was raised long ago. And it was not just limited to the PCCS. There was a question, if you remember, that there could be other locations.

Did the staff ever follow up on that question and come to the conclusion that it was the PCCS where the highest likelihood were? Or were there other locations possible?

MR. WAGAGE: Other locations is not a concern that the mechanism accumulation of hydrogen is different. At PCCS --

MEMBER BANERJEE: Let me ask you, did you examine the question first? If you look back in the records, this question was raised what six times before this.

MEMBER CORRADINI: Are you -- I'm still not honing in on your concern.

MEMBER BANERJEE: Are there any other locations than the PCCS?

MEMBER CORRADINI: Can I try this question differently? Did the staff consider other places that hydrogen can accumulate other than the PCCS that could be worst than or similar to? I think that's what --

MEMBER BANERJEE: Eventually to a detonation.

MEMBER CORRADINI: Because the question originally was when our consultant was worried about it, he was worried about it everywhere.

MEMBER BANERJEE: Well, we just wanted to know. I was still a member of your subcommittee at that time which changes yearly apparently.

(Laughter.)

MEMBER CORRADINI: It depends. I needed you.

MEMBER BANERJEE: Where is the hydrogen and oxygen? An where are the possibilities of something happening?

MR. WAGAGE: It's unlikely that hydrogen and oxygen --

MEMBER BANERJEE: Did you examine that matter? Unlikely is a statement. How do you know it's unlikely?

MR. WAGAGE: From engineering judgment. There is no mechanism for hydrogen and oxygen to concentrate in the other locations. Hydrogen and oxygen comes at small concentrations from the core which releases to the containment. It mixes in steam, that concentration of hydrogen is about four orders of magnitude lower than steam. It comes out with steam. Then steam mainly goes to the PCCS because it

condenses at the PCCS and is sucked into the PCCS when that hydrogen comes in steam condenses hydrogen and oxygen. That's how the concentration goes up in PCCS --

MEMBER BANERJEE: And it can't be swept anywhere else?

MR. WAGAGE: Anywhere else, it should be minimal effect, maybe minor --

MEMBER BANERJEE: How did you determine that?

MR. WAGAGE: From engineering judgment.

MEMBER BANERJEE: There is no way that it can get into any other parts of the system?

MR. WAGAGE: Part of the system in the containment?

MEMBER BANERJEE: I don't know, wherever the water goes from the PCCS.

MR. WAGAGE: The PCCS -- as we explained and discussed at the subcommittee meeting, PCCS -- considered all PCCS when the hydrogen comes to where it goes, drain lines, vent lines, everywhere, we considered any possible hydrogen accumulation. That's why we added passive auto catalytic recombiners into a vent line to limit hydrogen accumulation --

MEMBER BANERJEE: So you're satisfied that

these catalytic recombiners would take care of the problem?

MR. WAGAGE: Problems, not all the problems. Only for the vent line. Noncondensibles is released to the vent line and at the entrance to the vent line there is catalysts. At the catalyst would take off hydrogen and oxygen entering into the vent line --

MEMBER BANERJEE: But would not pass through into any other part of the containment through the vent line?

MR. WAGAGE: Because the catalysts are at the entrance to the vent side. It would recombine hydrogen and oxygen there. Even if some remains, goes through the -- during the first 72 hours, venting is to the suppression pool. When it vents to the suppression pool, it has so much nitrogen. There's nothing it could do if the hydrogen, oxygen goes through the suppression pool --

MEMBER BANERJEE: There was a question, if you remember, that we asked you about the LFL and the UFL, upper and lower flammability limits. If you go back in your transcripts you'll find it. There was a question as to what is the LFL and UFL, upper and lower flammability limits in these regions for the

hydrogen. Because yes, there's nitrogen, but nonetheless, there's oxygen and hydrogen. So there is an effect of dilution which changes the flammability limits. There are graphs of these in various books. And did you look at these things?

MR. WAGAGE: If some goes into the -- some hydrogen, oxygen goes into the suppression pool, there is dilution by nitrogen and --

MEMBER BANERJEE: We understand. We were asking you for the concentrations in various regions at various times, hydrogen, nitrogen, oxygen, steam, whatever you like. We wanted some numbers, right? We asked for them.

MEMBER CORRADINI: If I might just interject, so a little history and I think this is where you're coming from. Originally, when our consultant was worried about it, he was particularly worried about the upper drywell head which was that small region that in the two models, the TRACG model they had initially improperly modeled it and it was modified. And then in the MELCOR, which they did the audit calculations, they had one single volume, right? And in the single -- so that was where we started with the question, and the worry was -- I think the worry was the upper drywell head and the exit out of

the vent lines.

So from that, and again, this is more historical, I think staff with their audit calculations and in the MELCOR calculations essentially honed in where the largest concentration would be coming out of the tubes. That's what led them to focus on the tubes and I think then the fix, whenever the fix was --

MEMBER BANERJEE: Yes. We agree.

MEMBER CORRADINI: Was the vent line because the next place after the tubes would be down into the wet well and all that transit path, so that what their thought was was to strengthen there and essentially eliminate all combustibles downstream of the vent line. That's how it kind of evolved.

MEMBER BANERJEE: I think there's no doubt that this is the region of the highest concentration. And you have to protect some region, you have to protect that. But nonetheless, the question that still remains is there sufficient concentration that may occur at some other part where it's -- where it is not protected in order to cause a problem, to burn? If you are above the lower flammability limit, because it will burn even in nitrogen, right? So the issue is have you found the concentration fields as a function

of time? Or have you examined it and come to the conclusion that given this is below the lower flammability limit? That's really the question.

MR. McKIRGAN: If I could, this is John McKirgan for the staff. I think Hanry, it might help if you would talk -- the function of the PCCS is to sweep and concentrate so much of the hydrogen that the concentrations in other portions, this dense spot in the upper drywell are unlikely to accumulate to detonable levels. It's the functioning of the PCCS that is pulling all that stuff in and that's where the additions to the modifications that have been making the design actually improve this aspect in that these PARS plates which is an addition in the design as a result of this evolution are further reducing the hydrogen concentrations.

So the staff feels that this is --

MEMBER BANERJEE: Does it feel or do they know the concentrations?

MR. McKIRGAN: The staff concludes that this is an improvement and that this is an acceptable approach.

MEMBER BANERJEE: We know it's an improvement. We agree with you. That's great. But is there a flammable concentration anywhere else, not

necessarily a detonation, but a flammable concentration anywhere else?

MR. DIAZ-QUIROZ: This is Jesus Dias with GH. Initially, the containment is inerted with nitrogen for a reason and traditionally, BWRs are inerted for a reason and that is because what happens is you do produce radiolytic gases. You have a break in the drywell in this instance and you're dumping radiolytic gases into these compartments, drywell, and eventually it ends up at wetwell.

The amount of nitrogen that exists initially is enough to preclude reaching combustible levels throughout a 72-hour period --

MEMBER BANERJEE: What are the maximum concentrations that you --

MR. DIAZ-QUIROZ: Less than four percent hydrogen.

MEMBER BANERJEE: And that is less than the LFL?

MR. DIAZ-QUIROZ: That is less than the requirement.

MEMBER BANERJEE: What is the LFL?

MR. DIAZ-QUIROZ: The LFL? Depending on different mixtures, but the LFL here is not a concern. It's what the requirement calls out and it's less

than four percent.

MEMBER BANERJEE: What is that requirement based on?

MR. DIAZ-QUIROZ: That requirement, when you go look at, I believe it's -- I don't have it off the top of my head, the Reg. Guides, the SRPs.

MEMBER CORRADINI: But I think -- if I might interject though, what you're asking is a good technical point. I think their limit is based on no steam -- no inerting whatsoever so that they're looking at the lowest potential point.

But back to your technical point, I think where you're going with this is that the only calculation done is on the GEH side where they had subdivided the drywell and looked at small portions. They corrected that calculation when we had asked enough questions back in January of '08, actually,

MEMBER BANERJEE: Right, it was way back.

MEMBER CORRADINI: It goes way back. And once they corrected it, they found that the noncondensible gas concentration was dominated by nitrogen and very little hydrogen in the upper drywell and the small gas base of the GDCS. So that's my memory, but I think from the staff side, again, just history, they stayed with a single volume model for

the drywell and did all their nodalization and their detailed audit studies on the exit out of the PCS where they thought was the problem and the ICS.

MEMBER BANERJEE: It's certainly the most severe region, but having dealt with that, are there any other regions where it can burn? That's really the question.

MEMBER CORRADINI: Then you have to turn to GEH because they did the calculation.

MEMBER BANERJEE: What you're telling me is it's always less than the lower flammability limit everywhere.

MR. DIAZ-QUIROZ: Yes, that is correct.

MEMBER BANERJEE: And that sort of answers the question. But do you know what the lower flammability limit is for hydrogen?

MR. DIAZ-QUIROZ: Hydro-oxygen and steam? Depending on where you are, it could be as low as three percent.

MEMBER BANERJEE: Yes, it's very, very low.

MR. DIAZ-QUIROZ: But then we're not at zero steam. We're at some steam. So it rises up to three, four, five percent. If you stay above 80 percent steam, you're out of that area of

flammability.

MEMBER BANERJEE: So let's get the answer straight. It never rises above the lower flammability limit?

MR. DIAZ-QUIROZ: That is what containment volumes analysis --

MEMBER BANERJEE: You're on record with that?

MR. DIAZ-QUIROZ: Yes, it is in the DCD. There is an analysis in there and it does show and it shows the assumptions that were used and what reg. guides were used and SRP was used to conduct that analysis.

MEMBER BANERJEE: Okay.

MR. McKIRGAN: And I believe those reg. guides are fairly conservative hydrogen generation rates as well. So there are considerable margins built into virtually every step of the analysis.

MEMBER BANERJEE: Thank you.

MR. WAGAGE: Staff raised this issue in the RAI 62.202 and issued several supplements and discussed concerns in public meetings. We consulted experts and technicians and structural analysts.

MEMBER BANERJEE: Who were the experts?

MR. WAGAGE: We had Dr. Joe Shepherd from

Caltech helping us.

MEMBER BANERJEE: Right.

MR. WAGAGE: We had two structural experts from BNL.

MEMBER BANERJEE: Is he here?

MR. WAGAGE: I think one expert is here today.

MEMBER CORRADINI: Yes, they were on the line yesterday.

MR. WAGAGE: Yes, you can see. These are the highlights of passive containment cooling system design. It has the design of PCCS to perform its safety functions after undergoing multiple hydrogen detonations. GEH conservatively assumed limited conditions in calculating detonation, pressure loading and its dynamic effect.

PCCS components serving as the containment boundary meets the requirements of ASME code, Class MC components. The other components meet Subsection MC requirements. The ITAAC, which will confirm PCCS heat transfer capability using a type test.

These are the highlights of isolation condenser design. For LOCA sequences ICS is not credited, except for its initial condenser inventory. ICS will be isolated before significant hydrogen

accumulation. During non-LOCA sequences, venting starts after six hours to prevent significant hydrogen accumulation in the ICS to detonable levels.

Steam supply piping and the drain piping in the PCCS ICS pool to the vessel meet ASME Subsection NB requirements. The other components meet ASME Subsection NC requirements. ESBWR CSB design capacity bounds loading from possible hydrogen detonations.

These are staff's conclusions. ESBWR PCCS is designed to perform its intended safety function after undergoing multiple hydrogen detonations. ESBWR ICS design capacity bounds loading from possible hydrogen detonations.

The issue on hydrogen accumulation in PCCS and ICS are lowered and RAI 62.202 is closed.

MEMBER CORRADINI: Other questions?

CHAIRMAN ABDEL-KHALIK: Let me for the record again ask the staff the same question regarding torsional loading on the PCCS resulting from explosions on both sides where the arm of the torque load is essentially the distance between the two units.

MR. WAGAGE: I have a structure --

MR. CHAKRABARTI: This is Samir

Chakrabarti. I did the staff design for the PCCS. I tried to explain this yesterday, but I didn't do a very good job.

MEMBER CORRADINI: You have to speak up. I just want to make sure we hear.

MR. CHAKRABARTI: The model and the issue of torsion that is arising, that was something that we also looked at. If you look at the element of the lower drum, it is supported by the nozzle right underneath. So when you load X along the axis of the lower drum, it really doesn't ever torsion out. And if you apply that to both of the drums at the same time, both of them are resisting essentially by the model that is lined up actually with the drum.

If we did not have that model support, we can imagine yes, they're under tremendous torsional load.

CHAIRMAN ABDEL-KHALIK: But that would be a shear load if the explosion were to happen on both ends, the same end of both drums.

MR. CHAKRABARTI: That is true.

CHAIRMAN ABDEL-KHALIK: But if you have an explosion happening on one end in one drum and on the other end in the other drum.

MEMBER SHACK: What I'm saying is you

can't translate that drum because that drain line is -- essentially are rigid points. So there can't be any deformation that gives you that torsional moment. It's the rigidity of that drain line -- it's like 15 inches right?

MR. CHAKRABARTI: About 15 inches and what I wanted to show, it's not just an assumption. In the model that was analyzed from this detonation load in the lower drum for the overall effect, included the structure and the streamline at the center and the only mechanism by which the load from this one gets transmitted to the entire structure it through the tubes. It shapes this bottom one through the tube. It goes there and it connects to the pipes.

CHAIRMAN ABDEL-KHALIK: Okay, thank you.

MR. CHAKRABARTI: And what we found out, the effect from one site analysis there, the reactions that you did are very insignificant and much less than forces that you got from seismic analysis. And we doubled the seismic loads for the design of the entire structure.

MEMBER CORRADINI: Thank you.

MR. CHAKRABARTI: Okay, thank you.

MEMBER CORRADINI: Other questions? Otherwise, we're going to move on to digital I&C.

Chapter 7 issues. Let me just put it generally.

Alan, you're going to kick us off here? Oh, you're driving. Skip, you're the --

MR. BUTLER: Okay, great. I'm Skip Butler. I'm the ESBWR I&C manager. So the open question from the ACRS meeting was around watchdog timers, both in general and specific to the RTIF-NMS platform. And the two questions were really what is this system response if there are problems with the watchdog timers? And then what's the time associated with a reboot of a processor involved in the RTIF-NMS platform? So we'll attempt to address those.

MEMBER BROWN: I want to clarify one thing.

MR. BUTLER: Sure.

MEMBER CORRADINI: We're expecting to hear from you.

(Laughter.)

And then you can pass it up to John at the desk.

MEMBER BROWN: Okay, the first question, maybe it got misunderstood in the translation. I wasn't -- my question wasn't relative to a failure of the watchdog timers. It was the need or the system response when the watchdog timers were called on to

operate. Is that the question you're answering?

MR. BUTLER: I think that's going to be the question that we attempt to answer.

MEMBER BROWN: Okay, I got that through the other slides, but I wanted to correct the record relative to the perceived issue.

MR. BUTLER: Okay, so just a short primer on what the watchdog timer is meant to do and it's really a supervisory function that provides for monitoring and corrective action. Whenever you have a digital system running a programming loop, it's important to maintain the programming loop within its time budget. If that is not occurring, then it's clear that the probability that the function intended in the program is likely not to complete in the necessary period of time.

So what action does this function take? It essentially causes the application program's processor to reboot itself. Some systems reboot more than others. I notice there's a variety of PCs on the table. I'm sure that's ripe for conversation elsewhere.

MEMBER CORRADINI: Thank God you don't use those.

(Laughter.)

MR. BUTLER: And we don't. So the objective is to make sure that an appropriate trigger or reset action is taken in the main application program processors so that it comes back online and then the question is with every system design in what state does it come back on line? But the main purpose of the watchdog timer is to ensure that the function is operating properly within a specified period of time. If it doesn't, then it's kicked or it's triggered and it's pulsed to ensure that it comes back to an online state and then subsequent actions are taken to put it into its application, into its intended application.

MEMBER SHACK: Do you have a hardware or software timer?

MR. BUTLER: For the Q-DCIS, the specific watchdog timers are hardware-based. Around them, there may be additional programs that are performing monitoring diagnostics, data collection, and so forth, but the specific function of the watchdog timer is hardware-based and that's in alignment with the guidance.

So another critical thing just to note and then I'll explain a little bit more later is that a watchdog timer is initiating a pulse or a trigger and

one could choose to use that pulse or trigger for a range of things other than just kicking the main application program and bringing it back to an operative state. So we'll talk a little bit about that.

Next chart. In the DCD, specific to the RTIF-NMS platform, what I've highlighted here is just to say that we do declare the fact that a design feature is the use of watchdog timers in these digital systems and that if the software stops, the result is a channel trip. And what we like to try and do here is to clarify how that actually works so that there's no confusion as to the simplicity of the watchdog timer and its function and how is that in the overall functionality of the RPS system to ensure a failsafe condition.

So just to emphasize, we don't use the watchdog timers to initiate a failsafe action. Their sole purpose is simply to ensure that the specific application program is brought back into an operative state. The way in which we ensure failsafe conditions is through other aspects of the RPS design which we'll talk about. And again, for the Q-DCIS, the specific watchdog timer is a hardware implementation.

So just to explain the timing around this

thing and then after that we'll talk a little bit more about how the overall function works to ensure a failsafe condition. Based upon our existing design approaches being implemented in the ABWR Lungmen project, we do have some general criteria in terms of expectations or bounding and so these specific processors and there are three that run in an RPS divisional implementation. So in general, with the current technology, they're running at about 20 milliseconds as we spoke. The watchdog timer is looking at every programming loop cycle, so of course, it's looking for a pulse back from the application program for every 20 milliseconds.

And then the question becomes well, how often or what period of time are you going to allow to proceed before the watchdog timer says well, I haven't heard anything in some period of time, so I better go ahead and kick the program again and make it restart. So you know, you don't necessarily want to do that within one cycle because there are some valid reasons why the application program might hiccup, but certainly you're going to go too long because it never gets restarted. So there's a balancing point which is part of system design and it allows the overall function to be fit in its time budget.

In the take away, I'd like to clarify that in the overall RPS stream, there are fundamentally three modules that have processors. The other two downstream modules of the RPS system do not use a microprocess in a programming loop. So the three that do really from the start of the sensor down through the system is the remote multiplexing unit. That's the RMU; the DTM which is the digital trip module; and then the trip logic. Those all three have processors. They are independent modules. They run asynchronously from one another. Each one of them has their own watchdog timer.

MEMBER BROWN: Will each of those timers initiate the reactor trip signal or alarm? That three in series?

MR. BUTLER: We'll get to that in a minute, but to refer back to what I tried to clarify earlier is that in our implementation the watchdog timer in and of itself does not directly initiate a trip. The trip signals either come from the application program itself or they result from the downstream module listening for its signal from the upstream separate independent module. And if that communication doesn't come in the specified period of time, it will set itself into a trip condition for

that division because it didn't hear what it was supposed to hear. So the watchdog timer action, the reset pulse, its simple sole purpose is to look at the application program it's monitoring and restart it if necessary.

MEMBER BROWN: That's not clear -- I'm sorry, Dennis.

MEMBER BLEY: You were saying that's the channel trip?

MEMBER BROWN: No, that's not what I understood it to be based on previous, based on the reading.

MR. BUTLER: I agree we could have written it better, and that's why I --

MEMBER BROWN: I don't want to argue about how it's written or whatever. The last one in the stream, okay, is the trip logic unit, the two out of four voting. I mean if I look at the RMU of the DTM, the TLU --

MR. BUTLER: Right.

MEMBER BROWN: After that, it goes to whatever this logic unit?

MR. BUTLER: Right.

MEMBER BROWN: Which is a signal conditioning to feed the lower drivers for the

individual breakers, whatever.

MR. BUTLER: Right. And in the first slide -- and back up. That chart which is 721.

MEMBER BROWN: I saw it. But if the trip logic unit watchdog timer times out, it doesn't trip, issue a channel trip? You said it doesn't do that unless something downstream is not listening for it and the OLU is not a processor.

MR. BUTLER: So it's set up so any one of the downstream modules are set up and implemented in a way that it's listening for a communication pulse. And if that communication pulse doesn't come in a specified period of time, then it will go ahead and initiate -- well, it will then put that division in a trip status. So all the way down the stream, all the way down to the logic drivers this functionality, they'll implement it differently at each later of these five modules is looking for something from the one above. And if it doesn't get it, it assumes that division is in trip.

MEMBER BROWN: Go to your last slide. That slide with your picture on it. The backup slide.

MEMBER CORRADINI: Is that the one you want?

MEMBER BROWN: Left hand side is of

interest. If you just pick division two which is the second one --

MR. BUTLER: It's exposed in division one, but it works the same in all of them.

MEMBER BROWN: I'm just picking one, okay? And you got the top box is RMU and the DTM and then TLU.

MR. BUTLER: Right.

MEMBER BROWN: One of the little bitty boxes after the trip logic unit on the right-hand side is the output logic unit. And then it sees a low driver. And those low drivers are fixed in a coincidence-type configuration, two out of four also.

MR. BUTLER: Yes.

MEMBER BROWN: My question is if the TLU locks up, will that low driver trip for that chant division?

MR. BUTLER: Yes.

MEMBER BROWN: So in fact, it does react in a failsafe manner and sets a trip as a failsafe trip in that two out of four voting logic in the low drivers.

MR. BUTLER: Yes.

MEMBER BROWN: And if you got another signal, then the reactor would scram?

MR. BUTLER: Yes.

MEMBER BROWN: Thank you. To me, that's not quite what you said a minute ago. You said it only functions to monitor and does not react in a failsafe, does not result in a failsafe trip signal, but it does.

MR. BUTLER: The system of these five modules for the RPS implementation for that division will always result in a failsafe condition.

MEMBER BLEY: I think what I've heard is that the watchdog itself will not generate directly the trip.

MEMBER BROWN: That's my next -- I haven't gotten there yet.

MR. BUTLER: I agree with what you just said.

MEMBER BROWN: My question though is if my TLU does not receive an input it locks up. It can't generate -- its software cannot generate a signal to the output logic unit. So does the watchdog timer then cause that processor to output a trip signal to the output logic unit?

MR. BUTLER: No.

MEMBER BROWN: So if the TLU locks up, you get no trip signal?

MR. BUTLER: When the TLU locks up, then the OLU that's downstream from it is not hearing --

MEMBER BROWN: So it will do it?

MR. BUTLER: It will do it. So it's always independent of what is upstream. And if it isn't hearing the downstream pulse it's supposed to get in order to ensure that I'm connected to a division that's sending me authenticated information, the moment that is broken, that division as seen from the downstream module will say that division is in trip, always and within one cycle or instantaneously if it's not running.

MEMBER BROWN: I saw your previous -- or that other slide said that this would occur within one of the program --

MR. BUTLER: Yes, and if it's implemented in the gate logic which is the output logic unit in whatever the time sequence of the silicon implementation.

MEMBER BROWN: Okay, now, and I know you disagree from this unlikely scenario --

MEMBER CORRADINI: Wait, before we go to another scenario, are you okay with this one?

MEMBER BROWN: It's the same scenario, just modified.

MEMBER CORRADINI: I want to make sure we're on the same page because Dennis heard it one way and now you guys are on the same --

MEMBER BROWN: I understand what you said.

MEMBER CORRADINI: Go ahead.

CHAIRMAN ABDEL-KHALIK: I have a question. How long does the OLU wait to hear from the FLU before it issues that trip compared to the 200 millisecond that the watchdog timer would essentially reset?

MR. BUTLER: Yes, off the top of my head I don't have the specific time, but not to speak in absolutes, it's near instantaneous because the OLU is not running a processor, so if a gate isn't held, that gate will close and is Ira on the phone?

MEMBER CORRADINI: Should be. We have to unblock him.

MEMBER BROWN: What he's saying is it doesn't wait for the 200 millisecond to cycle through.

MR. BUTLER: Yes, it's much faster. It's as if you implemented everything in gate logic silicon.

CHAIRMAN ABDEL-KHALIK: That was the reason for my question.

MEMBER BROWN: My point is you don't need

-- I had an ancillary question to go along with that, was any circumstance which we discussed in the subcommittee meeting, if all four TLUs locked up and there's a skew to these because they're operating asynchronously, although on a very fast time frame, but I don't know what the maximum -- probably a maximum spread of what, 30 milliseconds, depending on the timing cycle.

If you had an accident and you were detecting whatever and it was supposed to be tripping one cycle through there, then I should get, if they all locked up, three of them lock up, I should get a trip signal within the time frame expected for safe response as if this thing was a full protective action. In other words, it would meet the accident analysis time response.

MR. BUTLER: Yes, and it would do that in your scenario very, very quickly.

MEMBER BROWN: And that's -- so we don't have to agree or disagree on my interpretation of the possibility or unlikely nature of having corrupted data, lock them all up because that design feature would result in a protective action which would be satisfactory. You may -- we may disagree whether -- the last armor belts or not, but the architecture at

least has that protection. Am I clear on what I'm saying? Okay, I just wanted to make sure.

MEMBER CORRADINI: You have yet to give your hypothetical, right?

MEMBER BROWN: That was my hypothetical.

MEMBER CORRADINI: Okay.

MEMBER BROWN: And he answered the question and it said yes.

My next question is where is the DAC that requires the timing analysis to demonstrate that? I've looked through all the new DAC you've provided, the markup of 07 and I didn't see one for timing analysis that would confirm that.

MR. BUTLER: There is one that talks about a creation of a timing budget for each one of the major safety functions, but there is not one that's specific to RPS for this scenario. But there is a high-level one that was added two and a half weeks ago. I forget the number, but I can look it up and talk with you offline.

MEMBER BROWN: Okay, there's not a specific one, there's an over-arching general one, but it doesn't address necessarily the scenario of having to skew through two or three of these relative to the additional time although it's pretty quick for the

OLUs to sense that they don't -- they aren't getting triggered. They're not sensing anything from the upstream.

MR. BUTLER: No. What is in the DAC is that for the safety functions and digital I&C, all of the use cases require to save the reactor from the other chapters need to have a requirements flowdown for which the one over-arching DAC with traceability will ensure that all those requirements and the timing budgets therein are going to be explicit and they're going to be met and that's part of the overall LTR, the License Topical Reports. And what's obligated in them for us so we put one DAC in there to say that we will ensure that all of that is done and auditable. So that's what the DAC --

MEMBER BROWN: I understand that, it's just that this particular scenario of having that lockup --

MR. BUTLER: Right. We don't have that one --

MEMBER BROWN: Is not covered to do your timing budget, to do your analysis and it's not covered. So it would probably be lost in the shaft or whatever. So that's what I was looking for.

MEMBER CORRADINI: I think the answer is

it's not covered.

MR. BUTLER: Your specific scenario is not covered explicitly.

MEMBER BROWN: And therefore it probably would not be analyzed. That's the point. But whether there's enough margin in the time that's another point, another issue, but --

MEMBER CORRADINI: Did you have another question?

MEMBER BROWN: No, we can go on to the next --

MEMBER STETKAR: Can I -- and I haven't been involved in all the detailed discussions you folks have been having, but I notice you're very careful to talk about the reactor trip function. Can you explain to me how the same philosophy applies for the safeguards actuation function? For example, if watchdog timer detect corrupt data, do you actuate safeguards actuation?

MR. BUTLER: Yes.

MEMBER STETKAR: You do?

MR. BUTLER: The implementation is different.

MEMBER STETKAR: So if you detect, for example, two channels hung up you would fire the DPBs,

initiate ADS?

MR. BUTLER: I was going to go on to that next.

MEMBER STETKAR: Oh you were? Okay.

MR. BUTLER: It's not a problem.

MEMBER STETKAR: Continue, go ahead.

MEMBER BROWN: But before we do that, can I just ask one other question? Go back a slide, please. Forward. Where is the one on the timing? There it is.

Somewhere in here you stated that this lack of -- or this reset doesn't occur for 200 milliseconds or whatever the time you pick. It could be 150, 200, whatever.

MR. BUTLER: Right.

MEMBER BROWN: It's not going to be 120 millisecond cycle before you go to reset?

MR. BUTLER: No.

MEMBER BROWN: However, you said the trip occurs in one cycle. In other words, this lack of communication, so let me ask it clearer. If the DTM sends a signal to the TLU, no maybe that's the wrong way. If the TLU doesn't do something within 30 milliseconds, I'm just picking a time, then the OLU will take its action because it didn't see a refresh

or something. Forget the watchdog timer now because they're out of the picture.

MR. BUTLER: Exactly.

MEMBER BROWN: It's out of the picture.

MR. BUTLER: That's just one cause that could --

MEMBER BROWN: I just wanted to make sure that that refresh to the OLU happens the first time this lack of signal gets processed. In other words within one program cycle, 30 milliseconds.

MR. BUTLER: I think we said two to three. It's going to look, I think in one of these slides we say two to three --

MEMBER BROWN: Okay, I thought --

MEMBER SHACK: You said one cycle.

MEMBER BROWN: You said one cycle when you were talking.

MR. BUTLER: Okay, so --

MEMBER BROWN: Next page, interpretation if a trip happens in one cycle. Go to the next page, second bullet.

MR. BUTLER: So it's going to interpret from upstream in one cycle and then based upon how that downstream, if it's in the microprocessor base --

MEMBER BROWN: I'm on the OLU now.

MR. BUTLER: OLU, yes. Down at the OLU, as soon as it doesn't see in the time allotted that signal which is going to be very quick because it's looking for the pulse to hold it up in its condition and as soon as that pulse isn't there in the time allowed for that OLU, it's out.

MR. BEARD: Alan Beard with GEH. I just want to make sure because I think you're talking past one another. Are you talking RTIF or are you talking --

MR. BUTLER: RTIF.

MR. BEARD: RTIF, okay.

MR. BUTLER: I didn't want to mix apples and onions.

MR. BEARD: Thank you.

MEMBER BROWN: They're very much different and based on the conversations I had with staff yesterday and an answer from them as well as looking at this thing, I came to a different conclusion than the answer you just gave John because -- go ahead. I'll let John proceed now if he -- they want me to go to the next slide. Let's run through these and see.

MR. BUTLER: Does anybody else have any other questions?

MEMBER BROWN: Are you going to talk about

the SSLC? There's something back in here on the SSLC?

MR. BUTLER: Yes, there's one --

MEMBER CORRADINI: Go ahead and ask your question, Charlie.

MEMBER BROWN: The question is -- I'm sorry, John asked it correctly. You've got the -- the SSLC operates differently. It's a fail as is.

MR. BUTLER: Correct.

MEMBER BROWN: So that any individual failure within a train does not initiate an actuation signal.

MEMBER STETKAR: Or put it differently, a failure in that train will disable the actuation signal from that channel. Is that correct?

MR. BUTLER: Yes.

MEMBER BROWN: But yes, that's the way I interpreted it from the DCD and the other answer.

Now to address John's point, just phrased it, they all have processors in them, only in this case they're communicating, they're not communicating point to point. They're in this big network, scram net loop of data that you've got circulating and it's a circulation of data with addresses and everything else on it. At least that's my understanding. It's not any different from the RTIF.

MR. BUTLER: I'd like to just clarify your premise statement. If we're talking about a single division and that division is running three processors?

MEMBER BROWN: Yes.

MR. BUTLER: In the division running three processors in the TMR mode, that's an internal bus. It's not shared out on the --

MEMBER BROWN: Yes, got that. I'm talking about the communication from each of the three processors within the train, the voting logic unit processor. There's three in each train, so there's 12 total and they communicate with each other via a network.

MR. BUTLER: Yes.

MEMBER BROWN: At which described in great infinite detail in the subcommittee meeting. Now if the -- not to address that yet, because it's the voting logic units in each train get corrupted by this unlikely event that I'm talking about, what would be the system response? And I think does that capture your thought, John?

MEMBER CORRADINI: Can you repeat so others of us can appreciate it?

MEMBER BROWN: Okay. Each train and

there's three processors in each train. They all send their data to every -- their trip data to every other -- to every other voting unit. Okay, so you've got an equivalent of a data trip module and you've a voting logic unit. All the DTMs send their trip data to every one of -- its own voting unit and all the other trains' voting units.

So the hypothetical is if the data is corrupted and it gets to all the other voting logic units and they lock up. What is the ESF response, system response?

MR. BUTLER: So in all of the processors in each channel and across all divisions --

MEMBER BROWN: One DTM sends and it all goes to all of them. It only takes one DTM based on the way you've described the data transmission. I take it if one DTM and one train sends its data to all processors --

MR. BUTLER: Yes, but each --

MEMBER BROWN: That's what it --

MR. BUTLER: I'm just trying to make sure I understand. Are we talking about something that's corrupted across all three processors?

MEMBER BROWN: No, just one. I'm limiting it to one, a single set of corrupt data from one of

the DTM digital trip modules and it goes on the bus and it gets to every voting logic unit, all 12. And if it stops and locks them all up, what is the system response?

MR. BUTLER: Well, in the unlikely scenario that all of these processors --

MEMBER BROWN: But it's one failure.

MR. BUTLER: It locked up by whatever mechanism --

MEMBER BROWN: What happens?

MR. BUTLER: Then essentially alarms will be made and the system will not function as you've described the scenario in which case DPS exists to take care of that situation where for some reason the entirety --

MEMBER BROWN: Single failure.

MR. BUTLER: That's it.

MEMBER BROWN: It's a single failure.

MEMBER CORRADINI: The answer is yes.

MR. BUTLER: The answer is yes.

MEMBER BROWN: You're saying that the diverse protection system which is number one, not safety related, okay, is not conservatively analyzed, okay, is now the backup. We have to depend on a nonsafety-related system to cover the circumstance of

a single set of corrupt data locking up all the voting logic units.

MR. BUTLER: In the very unlikely scenario that you've postulated that's the purpose of DPS in the ESBWR DCDs.

MEMBER BROWN: We have a difference of opinion on whether a single failure is protected by the DPS or not, but if that's the answer, then that's the answer.

MEMBER SHACK: Well, let me ask a more simple-minded question. If one piece of corrupt data locks up one of these, why wouldn't it lock up all of them?

MEMBER BROWN: It could because you've --

MEMBER SHACK: No, I want to know what the probability -- could is an answer.

MEMBER BROWN: I'll let him answer the question and then I'll counter that.

(Laughter.)

MEMBER SHACK: I don't think you'll need to.

MEMBER BROWN: Ask the question.

MR. BUTLER: So we'll provide the answer, but on this one I think we'd prefer to do it in a proprietary session.

MEMBER CORRADINI: That's fine. We'll hold it up. So I think we can, but I want to make sure.

Charlie, are you --

MEMBER BROWN: No, I think we just needed to get everybody understanding what's going on. That's fine.

MEMBER CORRADINI: All right, any other questions. Thank you.

MEMBER STETKAR: Excuse me.

MEMBER CORRADINI: You were happy with him, so I thought you were happy.

MEMBER STETKAR: I am never happy.

(Laughter.)

I have a completely different question, but it focuses on and you might put it off to the proprietary session, but let me ask it. Back in July, we were discussing vacuum breaker isolation and I raised a question regarding how the isolation logic was going to work. And GEH made the statement that the isolation logic will not isolate all three vacuum breakers if leakage is detected through all three vacuum breakers. In other words, there will be some logic that will prevent all three vacuum breaker isolation valves from closing in coincidence. I said

gee, how will that be implemented? You said gee, we'll have to get back to you on that.

I've looked at the draft version of DCD revision 8. It is not described in there. It's not mentioned. I've looked at all of the DAC and ITAAC related to the logic system and the vacuum breakers. No mention is made of this coincidence logic. I cannot determine from the information in the design certification document or the DAC or the ITAAC whether or not this function will indeed exist or how it will be implemented.

So I would like you to explain to me whether the statement that you made in July was a misstatement and in fact, all three of them can go closed. Or if they can't all go closed, how that would be implemented and ensured in the final design? And if that's proprietary, we can hold it off until the proprietary or --

MR. BUTLER: I think we'll hold that off to the proprietary.

MEMBER STETKAR: But I'd like that -- it's an example of functional logic and it's a focused example.

MEMBER CORRADINI: Anything else that we can deal with open session?

Okay, we'll let you go. I'll have the staff come up and then we'll go into closed session for both questions to staff and GEH. We already have two.

And I assume GEH will be ready to answer them when we go into closed session. You'll be ready to answer these questions when we go into closed session? Skip, you'll be ready to answer these questions when we go into closed session?

MR. BUTLER: Yes.

MEMBER CORRADINI: Thank you.

(Off the record comments.)

MR. GALVIN: The staff -- Dinesh is going to present -- I'm Dennis Galvin, project manager. Dinesh is going to discuss the same topic we discussed on watchdog timers.

MEMBER CORRADINI: Do we have this presentation or did I miss it?

MEMBER BLEY: Just came around.

MR. TANEJA: This is really a follow up on the discussion that we had in the subcommittee meeting in September. And the questions that we heard during that meeting was which modules of the RTIS/NMS platforms contain watchdog timers.

And the other question was can a watchdog

timer reset or reboot without being detected, a silent action?

From staff's review of this issue, essentially every module that has a microprocessor has a watchdog timer, okay? And any reset of the watchdog timers that occurs it is alarmed and it also puts the division into a trip state.

Now the design of the RPS or RTIS/NMS platform is in compliance with the IEEE 603 criteria 5.2 and 7.3 which essentially requires any protective function to go to completion. So that is -- that protective function cannot be interrupted intentionally by the operator or any automatic mechanism.

So when we reviewed this design, we found the design to be in compliance with that IEEE 6.3 requirement. And that implementation of the watchdog timer is done exactly that way. If there is -- if pulse is given out by the watchdog timer it will initiate a reboot, but it will also send out a trip signal. It will put it into a trip state any module, okay? Just like Skip explained, any detection of any one module would be interpreted as a trip state. That is the actual tripping of the reactor.

Any watchdog-initiated action would also

result in a trip. And it will be locked in. It's sealed in. Okay? It will require an intentional operator action to be able to reset that. Acknowledge it. And in the ESBWR design, the operator can bypass one division if he chooses that it's a maintenance action. Then essentially he'll have to go into his Chapter 16 tech spec action statement, whatever the action requirement is for that failure. So the failure is alarmed, the channel is in trip state, not a deliberate action of the operator. Either he can put it into a bypass state and that condition will be down to two out of three scenario.

So whatever the tech spec allowance is, whether it is 6 hours or 12 hours for a given scenario for repair, for that period of time he can have it bypassed. Otherwise, it will have to be left in the third state. So this is the way we saw the implementation of the watchdog timer.

MEMBER CORRADINI: I was going to say you don't have to go through anything if we're -- I want to make sure -- I'm looking -- I apologize. I'm looking from a time budgeting standpoint that we still have to do aircraft impact. But if you have things that you want to emphasize please do. I'm just looking to the Committee if you guys have questions.

MR. TANEJA: Right. And talking about the ITAACs and DACs, and we have a specific DAC ITAAC, item 9a1 and 9a2 and 9b1 and 9b2 which verify the implementation of the IEEE 603 requirement for taking a protective action to completion. So we have that specific ITAAC for that.

So there are many facets of this design. They're all over the place. So when we look at ITAACs in 3.2 which is the software development, now in the requirements phase of that software development, all of these requirements, timing, budget, all the IEEE 603 requirements, they become some of the requirements in the requirement traceability matrix. So they need to be verified through each lifecycle state. So we have ITAACs in 3.2. We have ITAACs in Section 2 for IEEE 603 compliance. We have ITAACs for RPS system. We have ITAACs for ECCS system. So when you put them all together, Charlie will have multiple, multiple opportunities when inspecting the same thing over and over again. I think that's the way we look at this thing. For it to fall into a crack, potentially we're doing a very bad thing you know.

MEMBER BROWN: I just want to make sure the timer response is okay.

MR. TANEJA: The time response --

MEMBER BROWN: Let me finish.

MR. TANEJA: Yes.

MEMBER BROWN: For the watchdog, for the circumstance of having all these other things lock up and ensuring that I'll get two out of four and I will trip within the action, I'm now depending instead of on an independent architecture, instead of having an independent architecture which I don't have because I'm communicating like crazy between all the division voting units, I don't consider that a super independent architecture. I'm now depending on the design feature which will work to trigger a trip if they lock up. That's all.

MR. TANEJA: Not true, not true.

MEMBER BROWN: I disagree with you.

MR. TANEJA: Reactor trip system is a failsafe system, right? It is like looking at this way, if I don't have power I'm tripping, okay? And identically if I don't have a signal, I'm tripping. Whether it's a digital or analog signal, lack of signal, bad information, interpreted as a trip. Period.

MEMBER BROWN: I understand that.

MR. TANEJA: Now we did a very extensive look at that, Charlie. I mean it's --

MEMBER BROWN: I'm not disagreeing, Dinesh.

MR. TANEJA: So the design is depending on the safety system primarily. The diverse system is only there very unlikely, common cause software failure. This is what we are saying. Software failures are not by design. They are by an act of God. I don't know. I don't know where the software failure is going to come from. But if it does come, right, that's why we have the diverse system. But the primary safety systems are designed to take care of all safety actions by design. Design basis is that it will work.

To answer the question on the -- John, your question to GE, we also looked at that question, right? On the ECCS system or the ESF, the fail as is, okay?

The fail as is is a TMR design, okay? If I have a failure of one IO module, one processor within a chassis, I continue to function. Because that one failure does not take down the division, because of TMR. I have three processors doing identical function, three IO modules identical function. I can take two failures in that one chassis in that one division and still not fail that division.

MEMBER STETKAR: I think it depends on what you define as a failure.

MR. TANEJA: A failure for hardware component. A failure of a card --

MEMBER STETKAR: A clean failure in the sense of not putting out the signal that you anticipated putting out is the failure mode --

MR. TANEJA: We also looked at --

MEMBER STETKAR: That's not the failures we're talking about.

MR. TANEJA: We also looked at the failure. Okay, this is a clean failure that is alarming your diagonals and you fix and you go on. Now if we take bad data coming out of one division, now what scenario that Charlie is trying to portray, that is going to kill all my four divisions, right?

The way we looked at that bad data, okay, that bad data is -- there's multiple shared memories locations where this data is being looked at. Now what it's looking for is a very specific data set. If it doesn't see that data set, it ignores that division. So that's my single failure, okay? I don't go and corrupt everything else. I just consider that division down. So now I am working in two out of three mode, okay? So I have a single failure. My one

division is down. Two out of three and I still get my protective action.

That bad data does not -- okay, what Skip was saying that unlikely scenario where I will get to all that is we call beyond design basis. That one scenario, okay? By design that data is designed to be detected as a bad data and ignored and that division goes out of service. Alarm division. That's the way we looked at it.

MEMBER CORRADINI: Before we start arguing, my question is arguing going to take us to resolution or are we just going to go back and forth?

MEMBER STETKAR: I think it's just best to wait to hear in the closed session --

MR. TANEJA: Yes, this is what we are reading.

MEMBER CORRADINI: So with that I'm going to turn to the staff to go to AIA.

MS. CUBBAGE: Yes, please.

MEMBER CORRADINI: Okay. We'll have more time to discuss in closed session. And the armed guards are ready to make it closed when we need to? Get out your stick.

MR. PRATO: I'm just going to go through my slides.

MEMBER CORRADINI: Were they loaded in?

MR. PRATO: I don't believe so.

MEMBER CORRADINI: Why don't you go ahead?

MR. PRATO: I'll just go right through them. Good morning.

MEMBER CORRADINI: We don't have a card, so you'll have to introduce yourself.

MR. PRATO: Good morning. My name is Bob Prato. I was the team leader for the AIA inspection at the ESBWR. I'm going to quickly cover an overview, based on guidance documents, the objectives, activities, outcome, and closure activities.

With regards to the overview, July, on July 26th through the 28th, the NRC conducted an inspection. Some of the information that we needed to complete our inspection was unavailable at that time, so we returned on August 3rd and exited for the entire inspection on September 1st, 2010.

The inspection basis is purely 10 CFR 50.150 at the aircraft impact assessment rule and the guidance document used was the inspection procedure, inspection procedure 37804 and the draft regulatory guide, Guide 1176 which endorse NEI 07-13 guidance. As is typically the practice, the industry and the NRC work together, came up with one methodology in which

the staff would accept if the applicants decided to implement that methodology, but they always had the opportunity to use alternate methods.

The inspection objective is to verify that an applicant implemented the provisions of 10 CFR 50.150 such that it would reduce use of operator action. The applicant's design can withstand the effects of a large commercial aircraft impact.

With more specific detail, the NRC inspection team through sampling of the information that makes up the aircraft impact assessment, verifies that the aircraft impact assessment is adequate to meet the requirements of 10 CFR 50.150 and the guidance set forth in draft regulatory guide 116.

If an applicant decided to use any other methodology other than what's in the industry guidance document, the NRC inspection team will evaluate any of the deviations from that approach on a case-by-case basis to ensure compliance with the rule and to verify the accuracy and completeness of the aircraft impact assessment.

At minimum, the NRC inspection team addressed the following technical elements which include the aircraft impact characteristics, plant functions, structures, systems, components, and

locations to be assessed, damage mechanisms, include physical shock, vibration and fire, and consideration of potential responsive actions and strategies in identifying design features and functional capabilities.

From there, the inspection activities are broken down into three disciplines that include structural analysis, fire damage analysis, and system loss analysis. Plus the inspection team performed documentation and record keeping reviews. In each of the three disciplines, the inspection team verified that the AIA was sufficiently rigorous and realistic as well as design specific.

And if you look at the inspection procedure, we have three appendices, A, B, and C, and each one of those address one of the three disciplines. And those appendices have a long list of specific items that the staff looks at.

As a result of the inspection at the GEH facility in Wilmington, we identified multiple examples of a single violation. And that violation in summary says that GEH did not use realistic analysis for certain aspects of its aircraft impact assessment and that includes accurately determining some of the biodamage footprints, adequately considering finite

element analysis boundary conditions, initial conditions, and time duration, failed to perform mesh refinement sensitivity analysis, and to provide a technical justification for the primary impact scenario selected or to provide a technical justification for those primary impact scenarios not selected for the structural analysis using the NRC specified loads and the material properties given in the industry guidance.

They also did not include in the AIA the basis for not performing an analysis for an aircraft impact on the gantry crane and corresponding potential effects of the gantry crane dropping on the drywell head.

MEMBER STETKAR: Bob, just for the other Committee Members, that's the reactor building gantry crane on the reactor building?

MR. PRATO: Yes.

MEMBER STETKAR: Thanks.

MR. PRATO: And they did not consider local effects from an aircraft impact. In addition, GEH did not fully identify and incorporate some of the design features or functional capabilities in this design such as fire barrier design features. What this is saying was that the AIA identified some design

features that were not included in the DCD.

Again, the staff identified one violation of 10 CFR 50.150. That NOV cites that GEH did not use a realistic analysis for certain aspects of its AIA and for not fully identifying and incorporating into its design those design features and function capabilities credited.

Relative to the inspection activities, in the end, the NRC concluded the following. With the exception of issues identified in the Notice of Violation, the portion of the ESBWR aircraft impact assessment reviewed by the NRC inspection team met the requirements of 10 CFR 50.150 and was conducted consistent with the guidance provided in NEI 0713. We looked at a tremendous amount of information over those five days. We found some problems, but in general, they met the requirements.

It is also important to note that the NRC inspection team performed a limited review of the AIA. We didn't look at everything. Many of the deficiencies identified may also affect other portions of the AIA that the NRC inspection team did not review. Therefore, in the inspection report, we asked GEH -- we told GEH that they must extend its review, where applicable, beyond the specific examples

identified by the inspection team and apply corrective actions as appropriate. So the portions that we looked at, we identified problems that may exist in other analyses in other areas of their assessment and we told them that they need to carry over and verify that those areas don't have similar problems.

The activities that remain, we issued the report yesterday on October 6. They have 30 days to respond. When they respond, the NRC generally completes three activities. The first one will be to verify complete response to each individual finding. Second one will be to verify that GEH extended its review where applicable beyond the specific examples identified and that GEH provided appropriate oversight where necessary. And finally, determine if a follow-up inspection will need to be performed.

Any questions?

MEMBER SHACK: Yes. Basically, considering the amount of work that this all represents will be we promise to do this later, right?

MEMBER CORRADINI: For clarification, let me just take a stab before he answers specifically. This is not the inspection report.

MEMBER SHACK: Right.

MEMBER CORRADINI: At this point, the DCD

Rev. 8 is not going to have a change. Now this is my interpretation. You correct me. At this point, we're going to be looking at today and potentially a letter on the DCD. The inspection report and the response to the inspection report will proceed in parallel. So did that help a little bit?

MEMBER SHACK: Yes. Well, the implication of my question is is this an impediment to writing that letter?

MEMBER CORRADINI: No.

MEMBER SHACK: Or are we waiting -- is the staff waiting for some future time for the applicant to respond properly?

MR. PRATO: I believe because our general finding was they did meet 50.150 with few exceptions, that's purely a decision of the Committee.

MEMBER CORRADINI: Let me turn to Amy.

MS. CUBBAGE: From a licensing perspective, we are anticipating some minor changes to the DCD and potentially minor impact to the FSER that was already presented to the Committee. We will provide that to you and we can go from there.

But we do not expect to be holding up the schedule for this issue.

MEMBER STETKAR: They identified some

things in the inspection where the AIA included credit for features or for characteristics of those features that were not documented in the DCD. Therefore, the DCD could be amended.

MS. CUBBAGE: Right.

MEMBER STETKAR: I don't want to speak for the staff --

MS. CUBBAGE: Let me just reiterate that as we discussed yesterday, GE has already submitted on the docket proposed revisions to DCD Rev. 7 to address the issue you just spoke of with design features that were credited in the assessment that were not specified in the DCD as key design features. So we are reviewing what they have provided. There may be some additional minor changes to what was provided. We don't anticipate a large impact to the schedule from this.

MR. PRATO: Let me add something also. The design of record is what is in the DCD. We identified things that we thought that they felt they needed to include. If they decide to change their analysis so that the DCD stays accurate, that's their prerogative.

MEMBER STETKAR: That's Rev. 7 of the DCD.

MR. PRATO: From the staff's perspective,

what's in the DCD is the design of record and they're going to have to make the analysis match the record or submit a change to the DCD.

MS. CUBBAGE: That's right.

MEMBER STETKAR: But you were working from Rev. 7 of the DC is that right?

MR. PRATO: I believe so, yes. And the other half of that, if you look at the rule A, part of the rule is in the assessment. The B part of the rule is on the DCD. They're separated. The Commission made a point to separate the two. The inspection really didn't have to be done before the licensing activity took place, but the staff chose to do that.

MEMBER CORRADINI: Thank you.

MEMBER BONACA: When will the details of the inspections be available to the other designers that are now designing different new reactors?

MR. PRATO: Each of our inspection reports are made public.

MEMBER BANERJEE: So it's fully public.

MR. PRATO: It's available to anybody. Yes, sir.

MEMBER BONACA: So they know the specific flaws that you found.

MR. PRATO: Yes, sir.

MEMBER CORRADINI: Jack.

MEMBER SIEBER: The outcome of this could be, one scenario is that when they do the detailed design they discover that the design as it's set out in the DCD will not produce an analysis that meets the criteria and therefore, they have to change some details. And that's not a remote possibility. That could be a real possibility. And does that invalidate that portion of the DCD which now would have to be modified because the design has changed to meet the AIA rule?

MS. CUBBAGE: In this situation, as Bob pointed out, the applicant has the choice to change the assessment or to change the DCD. However, we've already heard from GE that they do plan to change the DCD. They have submitted on the docket proposed revisions to DCD Rev. 8 which would speak to the findings that would have an impact on the DCD.

MEMBER CORRADINI: Harold or John?

MEMBER RAY: Let John go ahead.

MEMBER STETKAR: I'm done.

MEMBER CORRADINI: He's done. Go ahead, Harold.

MEMBER RAY: I'm trying to pierce the veil here, I guess. The gantry crane just to take that as

an example, I surmise from what I've heard that there's some small or the word minor was used, change that's in process that will address that.

MS. CUBBAGE: I think we should go into closed session if we want to get into any details.

MEMBER RAY: I'm just taking what you said and what's written on the page here.

MS. CUBBAGE: Right.

MEMBER RAY: And reaching a simple conclusion.

MEMBER CORRADINI: I think we can go into closed session if you want and then we can capture any sort of detailed questions and capture the I&C questions all in one shot.

MEMBER RAY: I'm prepared to defer to the subcommittee review of it, but I just want to make sure I understood. It's rather odd to have that kind of a thing unclear at this point in time for writing a letter. But the Subcommittee has looked at it and --

MR. RASMUSSEN: This is Rick Rasmussen with the Inspection Branch. From our perspective, there's two ways to address that crane. Either revise the analysis to substantiate the conclusion they've already reached which would require no change to the

design or revise the assessment and then incorporate that into the design. But we're not prescriptive as to which path they need to take.

MEMBER RAY: I understand, but I'm trying to figure out what the basis is for us making a decision.

MEMBER CORRADINI: I think Jerry said, but you --

MS. CUBBAGE: I would like to be able to address that in closed session.

(Whereupon, at 10:22 a.m., the open session was rescessed for a Closed Session until 11:04 a.m.)

1

2

P-R-O-C-E-E-D-I-N-G-S

11:04 a.m.

CHAIRMAN ABDEL-KHALIK: We do have a quorum. The next item on the agenda is item number 3, Final Safety Evaluation Report Associated with the License Renewal Application for the Cooper Nuclear Station and John Stetkar will lead us through this item.

Before I turn it over to John, however, I would like to apologize for the delayed start on this item on the agenda. Our earlier discussion took longer than expected. So, John.

MEMBER STETKAR: Thank you very much Mr. Chairman. Hope we'll make up time on this. Let me -- brief introduction. We had a subcommittee meeting on the Cooper license renewal on May 5 of this year.

At that time there were four open items and one confirmatory item in the safety evaluation report and I believe we will hear about how those have bees resolved this morning.

In addition to those items, there has been one additional concern raised in an RAI by the staff regarding scope of the inaccessible cables, buried cables monitoring program and I believe that both the applicant and the staff are prepared to discuss that

issue, and with that I guess I will turn over to Brian Holian.

MR. HOLIAN: Good morning, full committee. My name is Brian Holian. I am the Director of the Division of License Renewal and we are here for the Cooper final session.

I will just do brief introductions and turn it over to the applicant. That's the agenda today. The applicant first and then followed by staff.

To my right, I want to introduce to the full committee Melanie Galloway, who is relatively new, three or four months here in the division of license renewal. Melanie is a long-time manager at NRC. She comes from the division of risk assessment as the deputy there and just about four months ago swapped over with Sam Lee into the Division of License Renewal.

So we are pleased to have her here. She brings a wealth of knowledge and experience and on top of that, today it's her birthday. How about that?

To my left is Bo Pham. He is the projects branch chief that has Cooper and I'll introduce other NRC staff after the applicant when the NRC replaces them at the table.

You did mention just briefly in the

introduction an additional kind of emerging issue or concern. But just to put that in perspective because you will also meet this afternoon in another full session here similar statements, as the full committee is probably aware we are issuing the GALL hopefully, the new Rev 2 to the GALL in December.

I think we are on the subcommittee and full committee for the next couple of months, October/November time frames so you will be getting a more in-depth briefing.

But you have already seen it on a few of the last license renewal meetings that we have had, issues like buried cable and -- buried piping, I'm sorry -- submerged cables and other issues that are coming up in the GALL. It's been out in the public since about January this year.

So the one item there is not as much a concern as much as an evolving, aging management program that the in-house applicants we have been applying it, and so you will hear more of that today.

With that, I'll turn it over to Brian O'Grady, the chief nuclear officer for NPPD.

MR. O'GRADY: Good morning everybody. I am Brian O'Grady for the applicant. I am the site vice-president and chief nuclear officer for Nebraska

public power district at Cooper station. We are very pleased to be here today. This is an important milestone for us.

The only point that I would like to make is that we continue to enjoy very strong Board support for this program and this process and the license renewal in the long-term capital and O&M spends, the Board has been very supportive of us.

So at this point I am going to relinquish my seat to Dave Bremer, our project manager and I am going to turn it over to Art Zaremba for introduction of the team here unless there are any specific questions for me.

MR. ZAREMBA: Okay. Thank you Brian. I am Art Zaremba. I am the Director of Nuclear Safety Assurance at Cooper Station. And with me today is Dan Buman, our engineering director a the plant. Dan will take us through the discussion on the technical issues, the open items.

Dave Bremer is our project manager for license renewal application. And we also have some engineering support on the side. I would like to -- Eric Nelson, Phil Leininger and Ken Thomas, primarily electrical, buried piping and fatigue and support here for any questions that may come up on the open items.

And I will also like to thank the Entergy staff that is here, a lot of technical support in this project and in the license renewal application from the Entergy folks, a number of whom, project team members are here with us today.

Briefly, we are going to -- I am going to spend a very brief amount of time on the background, current plant status, site description at Cooper and then we will get right into the technical items of interest that Dan will brief us on for our agenda.

Current plant status, Cooper station today is at day 328 of continuous safe operation, the station. The site focus is on safety but that is the longest run that we have had in the history of Cooper station, the longest continuous run since our start of the unit on November 5, and there are no current challenges to continued generation that we are facing at the plant today.

We are a General Electric-designed, boiling water reactor, BWR-4 with a MARK-1 containment, a little unique in that we have a GE reactor and a Westinghouse turbine generator, original Burns & Roe architect engineer for the plant. We are rated at 830 megawatt electric, no cooling towers used in Missouri River as a once-through condenser cooling,

and we have approximately 725 full-time employees at the plant in Nebraska.

Background-wise, as folks know, we submitted our license renewal application September 30 of 2008. We had our subcommittee meeting on May 5 of this year, our final environmental impact statement on August 30 of this year, September 1, the safety evaluation report and our next refueling outage for the unit is scheduled for March, spring of 2011. We are on an 18-month refueling cycle at Cooper station. Our current license expiration is January 18, 2014.

MEMBER STETKAR: Art, you mentioned you are on an 18-month refuel cycle right now. Your plans are to change to a 24-month -- cycle, is that -- when will that start?

MR. ZAREMBA: We will begin in 2012 after we come out of our fall outage in 2012.

MEMBER STETKAR: Okay so you will be into that. I only mention that for the record because it's a little bit relevant to some of the inspection commitments.

MR. ZAREMBA: That's right.

MEMBER STETKAR: Thank you.

MR. ZAREMBA: Yes. With this, I would like to get us right into the technical items the interest,

the four open items in the safety evaluation report that you see there and the recent request for additional information on inclusion of low voltage cables into our medium cable voltage program.

So Dan, I will turn over to you.

MR. BUMAN: Thank you Art. My name is Dan Buman. I am the Director of Engineering and I would like to take a little bit of item, discuss how we resolved each of these open items with the staff. Most of these we have discussed at the subcommittee and I am just going to provide a very short background and resolution along with each one and any other developments that have come along since the ACRS subcommittee.

The first open item I would like to talk about is the Steam and Power Conversion Systems In-Scope. This open item concerned our decision to initially not include the non-safety related condensate storage tank 1A and it's associated piping and scope for license renewal.

Given that the condensate storage tank and piping is not classified as safety related and does not have a direct impact on the safety function, we did not initially include the condensate storage tank and piping.

It is important to note, however, that the emergency condensate storage tanks were always included in scope since they are classified as safety related and provide the primary source of water for the station's safety related high pressure injection pumps.

After additional discussions with the staff and consideration of the station's current licensing basis that allows manual alignment of the condensate storage tank to the section of the core spray and RHR pumps during shutdown conditions, we have included the condensate storage tank 1A and its piping within the scope of license renewal.

The second open item deals with one-time inspection of a small bore piping program. Our license renewal application discussed a one-time inspection of small bore piping socket welds, as described in the GALL, but due to limitations of the technique, the station did not initially commit to use a volumetric examination method.

Based on industry operating history concerning cracking of small bore socket welds, the NRC maintained that the volumetric examination was appropriate and given that we have experienced some previous cracking of socket welded connections,

suggested that a periodic inspection program was appropriate.

As part of the resolution, we have completed destructive examinations of 12 small bore socket welds and commit to an aging management program of periodic, volumetric exams of three additional small bore, socket-welded connections will be conducted during each 10-year interval of our risk-informed ISI program with the first of these additional examinations scheduled to be completed during the upcoming outage.

MEMBER SHACK: How many class 1 socket welds do you have?

MR. BUMAN: Total number of class 1 socket welds?

MR. THOMAS: Approximately 286.

MEMBER STETKAR: Sir, you will have to come up to a microphone and identify yourself.

MR. THOMAS: Ken Thomas, speaking for the applicant. It's on the order of 286 small bore welds.

MEMBER SHACK: So that's a one percent sample over the 10-year interval?

MR. THOMAS: No, I said 286 small bore welds. They are not all socket welds. There's some butt welds.

MEMBER SHACK: Oh there's some butt welds.

MR. THOMAS: So in our small bore portion of our risk-informed ISI program, we are examining 10 percent of the small bore welds.

MEMBER SHACK: But what fraction of the socket welds are you looking at? Are these going to be selected on a risk-informed basis?

MR. THOMAS: That's correct.

MEMBER STETKAR: I think the question -- do you have any idea, not necessarily a precise figure, but the total number of class 1 socket welds?

MR. THOMAS: I don't have that information with me.

MEMBER STETKAR: Is it 10, 50, 100? You don't have it. Okay. You mentioned previous operating experience with cracking in small bore socket welds. Could you briefly tell the rest of the committee what that experience was -- how many, what type of cracking?

MR. BUMAN: Certainly. We did identify, previously had three class 1 and one class 2 small bore socket welds we found cracked. These were associated around our RHR injection line. They were off-of a sample line, basically, right downstream of the 24-inch outboard injection valve.

When we did the examinations of those, we found evidence of vibration and what we found was a design issue with our injection valve. We had vibrations and when we changed out the valve trim, we saw the vibration levels drop and we have been monitoring those since and have not seen any.

As part of the extended condition, I talked about the 12 additional that we have gone out. We have gone out, we have done examinations on all of those and did not find any signs of cracking or any aging mechanisms in those.

MEMBER ARMIJO: So these were -- your conclusion was that these were more fatigue failures and were not related to the coolant?

MR. BUMAN: That is correct. That was our initial -- of what we had, and as I said, when we started talking with the staff, that's why we decided we would include in the volumetric examinations. We see no signs, based on our examinations of the destructive ones we have had so far.

MEMBER SHACK: But these would be -- I mean this is plain old, garden variety 304 you have probably had since the plant was -- nothing, no -- are they exposed to coolant by and large? I mean we are talking reactor coolant system right?

MR. BUMAN: That is correct. These would be the -- downstream of our RHR injection valves.

MEMBER BONACA: And you are not looking at more susceptible locations? You are looking at, is the risk -- you are not looking at susceptible locations?

MR. BUMAN: The risk-informed portion of the ISI, the basis for our risk-informed?

MR. THOMAS: Ken Thomas, speaking for the applicant. We use the EPRI template for our risk-informed ISI program.

MEMBER BONACA: Yes but my concern is you are inspecting three every 10 years and you are not looking at the more susceptible location so you are not bounding really.

MR. BREMER: This is Dave Bremer. The risk assessment does involve susceptibility to aging factors.

MEMBER BONACA: Okay.

MR. BUMAN: That is within the program. It does look at risk but it does look at susceptibility. The 12 socket welds we did were on the RHR injection line, which is a water environment. The three socket welds we are going to do and the two butt welds we are going to do in the spring outage, which will bring it up to 17, those are all in high susceptible regions.

We are going to do an additional five more in the following outage before PEO bringing th e total number heat-affected zone welds that we will be inspecting in small bore up to 22 welds before PEO and both are --

MEMBER ARMIJO: Following up on Bill's question, is part of your susceptibility based on stress corrosion cracking susceptibility or is it all based on potential for fatigue failure?

MR. THOMAS: Ken Thomas speaking for the applicant. We look at several different potential failure modes and stress corrosion cracking is one of them.

MEMBER ARMIJO: Have you had stress corrosion cracking in your piping?

MR. THOMAS: We did have, prior to 1985 but we replaced all the stainless steel in containment with material that is resistant to IGSCC.

MEMBER ARMIJO: Well, it's 316, nuclear grade or something like that?

MR. THOMAS: That's correct.

MEMBER ARMIJO: All right. Do you have noble metal water chemistry and hydrogen?

MR. BUMAN: Yes we do. It's part of our optimum water chemistry statement.

MEMBER ARMIJO: Thank you.

MR. BUMAN: If there's no further questions, the third item was our buried piping and tanks inspection. Our license renewal application originally committed us to meeting Rev 1 of the GALL. During the license renewal application review, we described that the station is developing a buried piping and tanks inspection program that meets industry's buried piping integrity initiative.

This industry initiative to deal with the recent operating experience of leakage from underground and buried piping was issued during January this year. It includes those critical elements that are necessary to establish an effective program that is aimed at preventing structural and leakage concerns related to buried piping.

As part of our resolution, the station's program is being modified to incorporate industry experience to evaluate not only buried piping, which is piping that is in contact with the soil, but also evaluate underground piping, which is piping that is contained in pipe chases or tunnels and is not in direct contact with the soil.

As required by the initiatives, CNS's buried piping and tank program will include a ranking process that is used to establish inspection

frequencies where highest priority is placed on safety related piping and piping that contains radiologically contaminated fluids.

Our commitment includes direct visual inspections of five, in-scope, buried piping systems, DG fuel oil, service water, condensate make-up, standby gas treatment and plant drains.

Separate commitments include inspections of at least one segment of fire protection piping prior to the period of extended operation.

In addition, prior to the period of extended operation, we will inspect a minimum of two percent total linear feet of all high-risk, in-scope buried piping using visual and/or non-visual methods. And then during the period of extended operation, we will perform examinations at least once every 10 years using visual inspections and/or non-destructive examinations on a minimum of two percent total linear feet of high-risk, in-scope buried piping.

MEMBER SIEBER: I presume that prior protection piping is piping that is buried in soil?

MR. BUMAN: That is correct.

MEMBER SIEBER: And so you are going to have to dig it up.

MR. BUMAN: That is correct. We have

actually been doing some excavation and then doing some examinations. I'm not sure if we -- the fire protection piping as of yet, but that is some of the planned coming up.

MEMBER SIEBER: It's cast iron piping? Is this loop piping or outside fire protection hydrant feeds?

MR. BUMAN: Yes, it would be. Yes.

MEMBER SIEBER: It's cast iron?

MR. BUMAN: I believe so. I believe -- Phil can you confirm that's cast iron piping?

MR. LEININGER: This is Phil Leininger, for the applicant. We have cast iron valves and we have some carbon steel piping.

MR. BUMAN: In addition, prior to the period extended operation, we will upgrade the cathodic protection system for all in-scope piping and tanks, with the bulk of this upgrade already in progress.

Then, during the period of extended operation, we will maintain cathodic protection system with annual testing in accordance with the applicable NACE standards with a minimum system availability of 90 percent.

MEMBER STETKAR: Dan, before we leave this,

I was listening to -- looking at your presentation this morning and I read some things in the SER and I wanted to make sure I understood what types of scope of inspection you were going to perform prior to the period of extended operation.

In the SER I seem to recall statements saying that you were committing to excavated inspections of a minimum of two sections each of the service water, fire protection and condensate make-up systems.

The presentation this morning doesn't seem to be that explicit, so could you -- I want to understand. If there's a disparity between what's documented in the SER and what you are actually committing to do, I would like to understand what that is.

MR. BREMER: Yes, prior to PEO -- just to clarify --

MEMBER STETKAR: That's what I am asking about. I understand, post PEO you are going to do two percent of the linear feet with --

MR. BREMER: Overall, total, we are going to inspect two percent. Within that two percent, five systems will be direct, burial -- visual observations, so at least eight excavations, at least

eight. So of the five systems, we have diesel fuel oil standby gas, HPSI, service water, condensate make-up and the plant drain line. That's in-scope.

Those will be excavated and direct visually examined. Along with that we will also use a technique of examining the pipe both with ultrasonic -- and I can turn it over to Phil Leininger to describe that more -- but we are also going to make a non-destructive examination of that excavated pipe, those end-pieces that we expose.

We also are going to use non-visual methods for some of the pipes that are between buildings that we can't physically excavate and altogether that will constitute a two percent inspection group prior to PEO.

MEMBER STETKAR: Then maybe I'll ask the staff then, because that doesn't seem to be consistent with what I was reading in the SER about extent of actual excavated piping sections, so we may come back to you for some clarification.

MR. BREMER: Okay.

MEMBER STETKAR: But we will keep the presentation going on on other topics here.

MEMBER ARMIJO: I have a couple of questions on your cathodic protection. What fraction

of your buried piping is subject to cathodic protection or protected with this system? Is it part of it?

MR. BUMAN: For all in-scope, we would be subject to the cathodic protection.

MEMBER ARMIJO: So everything that is in-scope is protected and this is an active system with external power? It's not buried anodes or zinc anodes or anything like that or is it -- what kind of system is it?

MR. BUMAN: We do have the DC rectifiers.

MEMBER ARMIJO: Okay.

MR. BUMAN: So we are going through some of the upgrades for example, is putting in some additional anode beds so --

MEMBER ARMIJO: Okay, and of the piping that you have inspected visually, that was protected by the cathodic protection system, what are your findings? Has it been effective? What does it look like? Does it look like it's --

MR. BUMAN: Actually our findings to date as we have been coming through have been that the piping has been very well protected. We don't see a lot of signs. Underground piping, especially in the service water systems, are coated both externally and

internally. I don't know, did you have any additional thing you would care to add, Phil?

MR. LEININGER: This is Phil Leininger for the applicant. We haven't done an extensive amount of excavation for inspection. But what we have excavated has had good coating on it. We have been doing some cathodic protection connections and up to this point, the coating that they have looked at has been good.

MEMBER ARMIJO: Okay, so the coating has been protective by itself, but in addition you have the cathodic protection system --

MR. LEININGER: That's correct.

MEMBER ARMIJO: protecting that.

MR. LEININGER: That's correct.

MEMBER ARMIJO: And have you actually looked at the metal, either deliberately removing the coating or anything like that?

MR. LEININGER: We have on our diesel fuel oil system, and we looked at the metal with the -- we took the coating off and did some ultrasonic testing on that and the material was good and we also did what is called a G-scan or a guided wave inspection of that piping just to give some extra distance and that came out good.

On our service water system, we have done

an internal visual to look at the internal coating and did a BEM or it's like an eddy current exam of the thickness, and those results were good also.

MEMBER ARMIJO: Okay. Thank you.

MR. BUMAN: If no further questions, I will move on to the fourth open item, containment inservice inspection program. This issue dealt with our torus monitoring program that we perform in accordance with ASME IWE.

The concern was that our existing monitoring was not sufficient to assure the intended function of the torus could be maintained during the period of extended operation.

As a resolution, we determined to enhance our existing monitoring to increase frequency of inspections and desludge the wetted portion of the torus from every other refueling outages that are currently due to each outage until the torus is recoated.

Of course after each inspection we do reverify the design margin as well as committing to a recoat of the torus within three years of entering the period of extended operation.

The last item that we wanted to discuss here was the additional request, based on industry

experience. Staff requested additional information concerning low voltage cable. Citing operating experience, NRC staff concluded that failures of inaccessible low voltage power cables, that is 480 volt to two kV, in the presence of significant moisture, were occurring in the industry and therefore they should be included in the aging management program.

The current EPRI initiative on cables only includes testing and monitoring of medium voltage cables. NPPD participates in this industry initiative and it was this initiative that formed the basis for our original aging management program.

Although we have not experienced an age-related failure of either low or medium voltage inaccessible cables, we do find it prudent to enhance our medium voltage cable program, therefore we have committed to include low voltage power cables in the inaccessible, medium voltage cable program.

As part of this program, the in-scope, inaccessible, low voltage power cables will be tested for degradation of the cable insulation prior to the period of extended operation, and at least once every 10 years thereafter.

A proven, commercially-available test will

be used for detecting deterioration due to the wetting of the insulation systems for all in-scope, inaccessible, low voltage power cables.

In addition, NPPD will monitor and inspect in-scope manholes. At CNS all manholes containing in-scope, medium voltage cables either contain automatic sumps or drain to manholes with an automatic sump pump.

All these manholes will be inspected at least every two years for signs of water accumulation or degradation.

With the inclusion of inaccessible, low voltage cables, one additional manhole that does not contain an automatic sump pump was identified and that will be included in the aging management program.

This manhole will have additional, condition-based inspections after conditions that could potentially cause water intrusion into the manhole, such as high water table conditions or after periods of heavy rain.

If found with water, corrective actions will be taken such as the manholes will be dewatered, contents inspected or tested as appropriate.

Are there any further questions?

MEMBER STETKAR: Yes, you mentioned one

additional manhole that you need to add to an inspection program. Can you give us an idea of the amount of additional cable that was added when you extended down to 480 volt?

MR. BUMAN: Total number of cables, Eric?

MR. NELSON: This is Eric Nelson, for the applicant. The additional amount of cables that was added to the program was I believe roughly around 13 low voltage cables were added.

MEMBER STETKAR: Okay. Are they primarily -- service water type equipment, things like that or -- that's okay, that's probably too much detail.

MR. BUMAN: One of the examples that actually added this on in was for a diesel fuel oil transfer pump as an example.

MEMBER STETKAR: But only one additional --

MR. BUMAN: There was one additional one. Some of these -- the rest of the cables were either routed through the existing --

MEMBER STETKAR: Yes, that's what I was trying to get a feel for --

MR. BUMAN: Yes. But there was one additional one that we put on in there. Now if there's no further questions, this concludes the technical discussion and I'll turn back over to Art.

MR. ZAREMBA: Maybe we can go back and I'd like to -- if we didn't answer your question on the SER and the inspections for buried pipe, if you could be specific.

MEMBER STETKAR: Yes. I guess we have a little bit of time here. We are making up time quickly. We are scheduled until 12:15 if I am not incorrect, so --

MR. ZAREMBA: There is no change. I mean, for us, we have reviewed the safety evaluation report and captured all of our commitments.

MEMBER STETKAR: The statement that -- and I have read the response to the RAI that was sent out also and that was a little bit more specific, but the statement says, "The applicant further stated that prior to the period of extended operation, during its cathodic protection system upgrades, it will perform remote, visual inspections at two locations on each system for the service water, fire protection, condensate make-up systems, including visual inspection of the coating followed by coating removal and wall thickness measurement."

So by definition that has to be an excavated inspection. This doesn't -- in the actual RAI response, it mentions a minimum eight foot length

of each of those sections and that seemed -- I wanted to make sure that indeed that was consistent with what you are planning to do, because that -- level of detail in terms of excavation and sort of sampling wasn't as clear in your presentation this morning.

MR. BUMAN: My apologies on that, but yes, our intent is to follow through exactly what we said.

MR. LEININGER: Phil Leininger for the applicant. For the cathodic protection upgrades, some of those are going to be done through a smaller hole. They won't necessarily be done through an eight-foot excavation but that is an opportunistic inspection.

So in that case, when we excavate down to it, it'll only be necessary for the cathodic protection connection.

MEMBER STETKAR: I was more concerned -- I mean I was more concerned about the scope and the kind of the sampling process, that it will at least be two different locations in each of those three different systems, where they will do an excavated and a wall thickness measurement. So that will give you at least some reasonable set of baseline indications.

Any other questions from any other members of the committee?

(No response.)

MEMBER STETKAR: Good. Thank you very much for an informative and very efficient presentation. Then I will have the staff come up.

MR. HOLIAN: Chairman are we ready to go?

MEMBER STETKAR: I believe we are ready to go.

MR. HOLIAN: Just to complete introduction to the NRC staff, to the left of the right of the table up there is Bill Holston, senior mechanical engineer in our technical review group. Bill is up there and has done a lot of work on a lot of technical areas, but in particular the buried piping program.

Next to him, on his left is Cliff Doutt, senior electrical reviewer. He will be there to assist on questions, low voltage cable and that program. Tam Tran as the project manager has been involved with Cooper for its entirety, and finally Dr. Allen Hiser, our senior level adviser, who oversees a lot of the technical reviews and in particular is there for small bore piping questions.

Also, we have in the room behind me Mr. Greg Pick, the senior inspector for Region IV happened to be in here, one for this meeting -- he presented at the subcommittee. Here for questions but also going to assist us on some of the process improvements we are

doing on the license renewal so we are taking advantage of having him in our office.

With that, I will turn it over to Tam Tran.

MR. DUBE: Yes. Good morning. My name is Tam Tran. I am the project manager for the station license renewal review projects. I have with me Mr. Bill Holston and the rest of the staff who have been introduced to you. I, along with the members of the project, we have discussed the staff review of the Cooper license renewal application, and the documented safety evaluation report. The safety evaluation report was issued to the applicant on September 1, 2010. Next slide.

I will begin with an overview of the Cooper Nuclear Station license renewal review. I then will continue with a discussion of the -- section 2 and 4 of the SER and the closure of the open items. Next slide.

For the safety evaluation report, the staff was aided with audit reviews and additional information provided by the applicant in response to more than 275 requests for additional information.

The information collected was used to develop the SER with the open item dated April 6,

2010. The SER with open items contained four open items and one confirmatory item. Three out of four open items are related to operating experience. Next slide.

MEMBER STETKAR: Tam?

MR. TRAN: Yes.

MEMBER STETKAR: We didn't discuss with the applicant the confirmatory item. Just to kind of close the loop, could you explain to the committee the concern?

MR. TRAN: The concern there is the use of a -- let me just go ahead and jump to that slide or do you want to --

MEMBER STETKAR: Oh, you have a slide on it? Okay, I didn't look further. Continue. I'm sorry.

MR. TRAN: Yes. I have a slide on it. Right.

MEMBER STETKAR: I'm sorry.

MR. TRAN: Okay let me continue then. With the issuing of the SER with open items, the applicant provided responses for closure of the open items including resolutions and evolving issues related to the management of low voltage power cables.

The staff reviewed the responses for acceptability and issued its finding of no open items

and confirmatory items in the final SER dated September 1, 2010.

MEMBER STETKAR: Before we leave that, this is the first license renewal application that has come before us where the scope of the underground cables, buried cables, whatever you want to call them, inaccessible cables, has been expanded down to include the so-called low voltage range, or 480 volts and above.

I understand from what Brian mentioned in the introduction that going forward, we should expect to see similar extension of the scope of that program. Is that correct?

MR. TRAN: Brian mentioned that there's a GALL revision update going on and that would -- the governing body for us to use --

MEMBER STETKAR: But in practice, essentially all of the applicants coming in in real time, don't have the benefit of that to-yet-be-approved revision of the GALL report. So they are all operating under the current revision.

MR. PHAM: This is Bo Pham for the staff. You are right. From here on, we have asked, in fact we have kind of put our heads together and thought about presenting this issue as part of the GALL Rev 2 but

during our considerations, I think the internal question was asked, if we know about the issue why isn't it being asked as of today?

And so we have collectively looked at all the plans that we have in house and asked the question. So this afternoon you will hear the same discussion that is going on on --

MEMBER STETKAR: And I am assuming there has been communication such that additional applicants coming in in the near term, let's say the next six months or so, are aware of this?

MR. PHAM: Yes.

MEMBER STETKAR: I understand going forward, and we are in sort of a transition phase here, what do we do about previously approved license renewal extensions, the vast -- all of which do not include this extended scope? How does the staff assure consistency in the scope of those aging management programs?

MR. TRAN: Yes, in house we have talked about that and that will --

MEMBER STETKAR: Okay.

MR. DOUTT: Essentially the AMP is a living document and it is designed to look at operating experience so going forward based on not necessarily

Gall update, Gall 2, but operating experience with the generic letter, with the work on GALL, the NUREG issues, the industry information, those things should be reviewed and incorporated as is applicable to that plant. So that's generally where we are at with that. So you are not looking at it automatically gets done. I don't know if there's more regulatory -- but from our point of view the program does allow for operating experience. I designed it to do that.

MR. HOLIAN: Yes. Let me just expand.

MEMBER STETKAR: Yes, I guess that doesn't quite give me the confidence that I was looking for.

MR. HOLIAN: The confidence is tough on previous plans. To force the issue kind of legally would on the face it take a back-fit process to go through and analyze it for the previous plans. However, I say that legally. However, when Cliff mentions that the GALL is a living document, their aging management programs are living documents at all the sites.

So part of the GALL that they commit to, whether it's GALL Rev 0 or Rev 1 goes to 10 elements of the GALL and one of those is operating experience and it puts the burden on the licensee to improve their aging management programs just like you do on

corrective actions or anything else on Appendix B of the operating license.

So when you have been given a renewed license and those 59 plants that are sitting before us now, we would expect them to look at GALL Rev 2 when it goes out and look at the new aging management programs.

And when we go to inspect them on 7103 inspection, when we go to the outages before or inspections before, we would expect to look at their operating experience, buried piping, low voltage cable, you have had several years here to look at your operating experience, look at the latest aging management program, and apply that to your site and inspect it that way.

So that's the answer on how we currently do that. As I am looking at a -- you know we take a rule change as we look to the rule to force them to apply the latest and greatest aging management program but we have seen the utilities recognize and build this into their program and from their view, they are under part 50 at that time. It's a renewed license under part 50 and so it behooves them, just like an Appendix B type program, to have the latest aging management program.

MEMBER BONACA: Would it be only a license renewal issue or not? It is not.

MR. HOLIAN: It would be viewed as an operating reactor issue -- license. Now we would find it, possibly, under the license renewal inspection, the 7103, that we specifically look at how are they doing with commitments.

So even on the first plant, say, for low voltage cable, they will not have a commitment to have put it in. We will go there with the expectation that they have added low voltage cable in when we come for that 7103 inspection.

Going to enforcement, if that be the case, if they haven't, you know we will take that up. Now that's one way we can do it under license renewal space. I pause here because under part 50 space right now, the electrical branch in NRR is looking at improving electrical -- the scoping of electrical cabling to be covered normally and so we working hand in hand with the part 50 house.

So there very well might be a generic letter that we are working on now --

MEMBER STETKAR: So in principle that could be one way to generically incorporate it.

MR. HOLIAN: That's right. In the next year

or two, we can have a new generic letter go out that says we are applying this, juts like I would expect to see it on buried piping, you know, those plants, we have come much further in the past four or five years in expectations. We are working with the NEI industry initiative on that. That one happens to be lagging these plants. We are leading on license renewal on buried piping inspection but it will catch up on the part 50 plants here as we work through with the industry initiative on that.

So we are in this period where, Mr. Stetkar and a couple of subcommittees that pushed me on, gee, on some of the plants, Brian, you are a little bit inconsistent on even some of these commitments that you are picking on on small bore piping and that and there is some truth to that.

But it's an evolving, living process and we expect to get to a consistent result as the industry responds to operating experience, if I can put it that way. It's lacking that, I would have to take the new Rev of the GALL and --

MEMBER STETKAR: Well, but I mean, if practiced the new Rev of the GALL -- but I don't know what fraction of the entire operating fleet will have gone through the license renewal, certainly submittal

and review process or through us, by the time that that might be formerly issued. But I suspect it's a fairly large fraction.

MR. HOLIAN: Well, in effect we have renewed 59 licenses now. This is looking, asking to be the 60th, the GALL is out now, those programs, the majority of them that are changing, we are asking them in these months now.

And the industry has been responsive to that, you know, one of their responses could have been hey, this isn't out there but they recognize the need to have the latest staff insights and the industry insights and the GALL was built on the last five years of operating experience, so that's the whole theory behind it: get it in there, update those programs.

So we will continue to look at that. I have one other item I will just add and we can -- this will be a better discussion. You know we are working with the regions on this. There is a way and a time coming when the first -- if the fleet goes through and in another four or five years, if however many come through, the initial license renewals, the way they are scheduled, could be completed in that time frame.

Then you resolve to the 7103 inspections that are still coming and the ROP inspections. I would

expect our normal maintenance rule inspection to sample license renewal commitments. So I am working with my ROP counterparts there to include that.

MEMBER STETKAR: But the point is we are coming up pretty close at least on some sites with the 7103 inspections now.

MR. HOLIAN: Oh yes. Yes, we are and the ACRS can be looking over our shoulder on how well we are inspecting those in and how well we are -- I had a presentation in Chicago last week that said we are done. There are seven plants in the extended period right now so we have done those 7103s and you know we are finding some of the commitments aren't -- we were surprised a little bit by some of the inspection type findings there and the utilities are quick to correct them but even speaking for their view, at the conference even, a few of those plants presented and said hey, their plant management kind of thought, well, we got our license, we are done, our programs are in effect.

And you know they are coming to realize there's a lot of work to put the programs in place and make sure they get these commitments that you looked at at the bottom of the SER are done right.

So I will you know, the regions go out

there, maybe we will try to highlight some more of when we come to GALL time frame on this subject at subcommittee, final committee and we can share with you some of the findings where -- regional inspections.

MEMBER STETKAR: Okay. Good, thanks Brian. Did you want to add anything or --

MR. DOUTT: The only other thing I guess I would add real quick is you will notice that for Duane Arnold you will see there is also inspection frequencies involved here as well and they are currently 10-2 for Cooper for 10 years testing and two years for inspection.

In GALL and in the questions that we have asked, we have asked for it to allow 6-1. Going forward that is the back-stop, is we are looking at that based on operating experience, Generic Letter 2007-01 plus the NUREG and other information. That just picks up that other group, if you look at that. Again it would depend on plant-specific operating experience and what issues are -- it will change, it could be less, it could be -- obviously it depends but that would be a general back-stop really. So you will see some differentiation from it going forward.

MEMBER STETKAR: Okay. All right. Thank

you.

MR. TRAN: I will now begin the discussion of the result of the safety evaluation report. Section 2 discussed structure and components subject to aging management review. For mechanical systems, section 2.3, the staff identified one open item related to the scoping of the condensate storage tank.

In accordance with 10 CFR 54.4(a)(2), the condensate storage tank and associated flow path is within the scope of license renewal because the staff found that during emergency cooling operation, the condensate storage tank can be used as a source of coolant to support safe shutdown.

For closure of the open item, the applicant responded with license renewal amendment to include the condensate storage tank within the scope of license renewal. Next slide.

In result, the staff review of one open item was identified related to the management of small bore piping socket welds. The applicant proposed to manage the aging effects in socket welds by means of visual inspections. The staff find volumetric examination for management of small bore socket welds to be consistent with the GALL report recommendations.

The applicant responded with commitment to

provide periodic inspection every 10 years interval and to employ volumetric inspection techniques in addition to visual inspections.

MEMBER STETKAR: Tam, before we go on to the buried piping, the question came up earlier regarding the fact that the applicant has committed to perform volumetric inspections of three socket welds on every 10 year interval and I understand that there will be a risk-informed selection process to determine which specific three.

Is that sample of three of N, where N is apparently indeterminate, adequate in your mind to give you a reasonable sample?

DR. HISER: Well, the one factor that Cooper has in its favor is they have destructively have examined 12 and the combination of that with the maybe two percent, something like that, sample, we think is sufficient.

The destructive exam clearly is more informative than NDE because you are able to look at it in the lab. The fact that they found no degradation in the 12 gives us a very high confidence that there is no degradation ongoing. The additional NDE sampling will give us some confidence that there is no cracking or other mechanism that incubates and initiates during

the license renewal period.

MEMBER ARMIJO: Allen, did that -- did those destructive exams confirm that the two or three failures that you did -- that they did have at Cooper were caused by fatigue and not by stress corrosion cracking?

DR. HISER: Well, the only thing I would say is they were caused by high cycle fatigue. Fatigue in and of itself is an aging mechanism.

MEMBER ARMIJO: I understand that, but I am just -- this was high cycle fatigue, so you really knew the root cause of the thing so that will inform your inspection program, I presume.

DR. HISER: Yes, that's right. Our understanding is that additional inspections that Cooper has done have demonstrated that the design changes that they made have been effective in eliminating that high cycle.

MEMBER ARMIJO: So if you had a population of socket welds that were in potentially high vibration locations, the inspection may be a big fraction of -- it maybe won't be such a tiny fraction. It may be a small -- the number of inspections are going to be small, but if the population that potentially could be affected is small as well, the

percentage could be quite high.

DR. HISER: Right, and I think with the risk-informed program that Cooper is implementing and using that as the basis for selection of the three, I think that would identify the high susceptibility and high-risk areas, so that was why we were confident that their program going forward, they were not just randomly selecting locations. They were targeting on those locations that should be the most vulnerable.

MEMBER SHACK: But again, juts on the consistency thing, sometimes we see 10 percent, sometimes we see three.

MEMBER ARMIJO: We have a number that we like.

DR. HISER: You also will see though one-time inspections versus periodic and really the basis for that is what has the plant's operating experience been, what have they done in the past? And in this case the 12 is a substantial factor in indicating to us that two percent is the right number on a periodic basis for Cooper.

Plants that have -- that are more in the 10 percent range, which I believe Duane Arnold is for example --

MEMBER SHACK: That is the one that came to

mind for example, for some reason, I wonder why.

DR. HISER: But they have not done the destructive exam, so they don't have that background in place that gives them confidence that their piping is in good condition. In this case, we have high confidence that the piping is in good shape.

MEMBER STETKAR: I believe --

MR. TRAN: Just for the court reporter, that was Dr. Allen Hiser from the staff.

MEMBER STETKAR: I believe we have a couple of comments.

MR. FU: This is Bart Fu. I am with the division of license renewal. I am the reviewer for the small piping program. I was actually going to, if I can, address the questions regarding consistency. Well we are just talking -- well, Dr. Hiser has talked about Cooper, why is it adequate? Because questions were raised by the committee why 10 percent or 12 welds or how many welds.

Well the staff's review is based on a number of factors, including operating experience, inspections, current inspections and also weld populations. As far as operating experience, that is a very important factor.

We just gave examples. Not long ago we

discussed Kewaunee. It has got 325 class 1 socket welds and after 30 some years of operation, it never experienced cracking. So in this case, you know we looked at the applicant's proposal of volumetrically examined -- I believe they proposed five welds, roughly 12 still at two percent, and also as an option, they wanted to leave it open, because it's pretty close to the PEO, about three years or so.

They wanted to leave it an option, so if they couldn't get, just can't get the technique or procedure ready, they want to be able to ultimately destructively examine a few welds.

It is one examination of multiple welds. Maybe in the SER it wasn't that clear but I want to clarify here. It's not one weld, one examination. And we are going to -- we actually got some clarification from the applicant. It's going to be a minimum of two welds.

So in that regards, you know, based on the operating experience, based on the inspection they already performed, circuit inspection, visual, part of the ISI program, they never found any flaws.

So in this case, the staff said that this is adequate. The program is basically looking for additional assurance that aging is not occurring

during the PEO.

MR. HOLIAN: Let me just -- Bart that's good. Let me just add, I'm Brian Holian, and I don't know if the committee needs more detail on that, but in one area I did want to mention and why Bart is there, and Gerry Dozer, his branch chief, and Allen Hiser, that consistency piece, I guess we understand, especially as you are catching up on these aging management --

I did want to highlight the staff work on this, though, because if you go back to six months to a year ago, you know, we were -- it was a little bit of a fight with the industry on even a question raised of the applicant here, is this really fatigue in your mind or is there an age-related degradation piece to this?

And so for quite a while, the staff has been kind of fighting to get any improvement here and so we are definitely headed in the right direction and we understand the comments and --

MEMBER STETKAR: Let me see, I think the applicant had something to say and maybe --

MR. BUMAN: This is Dan Buman for the applicant. We were able to gather up the information. We have a total of 246 class 1, small bore socket

welds is our total population, 246. That is correct.

And with regard to the operating experience and the modifications, we do have post-modification testing, we have vibration tests that have changed and it had dropped and our monitoring said that that was effective.

MEMBER STETKAR: Okay. So that means -- that means we are inspecting 1.2 percent every 10 year interval. Okay. Thank you. Let's talk about underground piping and tanks.

MR. TRAN: Right. The staff identified one open item associated with the buried piping and tanks inspection program. Mr. Holston got to discuss this with you since this is a fairly recent and evolving issue.

MR. HOLSTON: In essence, where we have evolved is we looked at the industry experience that has occurred in the past couple of years, recognized that there are three key factors in protecting buried pipe: it's cathodic protection, coating quality and back-fill quality.

And as we approach each plant, each of the current applicants, we look at their specific operating experience, and for example, Cooper has had no buried pipe failures, and then evaluate those three

factors.

And that drives the need for what inspections will be conducted, and we have evaluated for consistency's sake each of those plants against the new criteria of GALL AMP41 even though that hasn't been issued yet.

MR. TRAN: The staff identified an open item related to the management of aging impact of the torus. The staff reviewed the applicant's operating experience and identified a concern about the cumulative effect of more than 2,000 pits in the torus, a total of 3,800 torus coating repairs.

The applicant responded with commitments to recoat the wetted portion of the torus within three years after entering the period of extended operations as a preventive measure. In addition, the applicant will remove sludge and inspect the wetted portion of the torus every refueling outage until the torus has been coated.

That's what I have. Any questions?

MEMBER STETKAR: Yes, just a couple of quick ones. The period of extended operations will begin in 2014, is that correct? You said I believe the next outage is spring of next year.

MR. TRAN: Yes.

MEMBER STETKAR: So we will have basically two inspections of the torus between now and the period of extended operation, is that correct? I don't know if I did the math correctly. Perhaps the applicant --

MR. TRAN: That is correct, both next year and then in 2012 fall.

MEMBER STETKAR: Good, and I was going to ask the applicant but I will ask you because we have a couple of minutes here. Could you tell us the maximum depth of the pit, any of the pits that have been identified to date?

MR. TRAN: Yes. We didn't talk about it. I think we can go ahead and have --

MEMBER STETKAR: Well maybe the applicant might have it.

MR. TRAN: I think the staff here can talk about that.

MR. PRATO: This is Bob Prato for the staff. I don't have that figure off the top of my head.

MR. SHEIKH: Yes. Abdul Sheikh. I have this information. They have the general corrosion in the general area of the torus have a corrosion allowance of 153 mls and nowhere they have exceeded that. In the

local areas around the girders, they have an allowance of 92 mls, and in one location, they had up to 94 mls and they analyzed that condition and they found it acceptable.

Then the last one is around the penetrations, where the allowance is 31 mls and they found one place where it was 59 mls and they analyzed that condition and they found it acceptable.

And since then they have recoated all these locations and they are operating history shows that after the recoat, there is no loss of metal in those locations. Is there anything else you would like?

MR. TRAN: Just a little distinction, when you talk about repair, recoating is an engineering --

MEMBER STETKAR: What they have done is they have put some epoxy over the identified locations but they are committing to actually do a qualified recoat of the entire torus below water level.

MR. TRAN: Correct. Right.

MEMBER STETKAR: All right?

MR. TRAN: Even the vulnerability of the in-scope low voltage cable failure shows that with one intrusion environment, the staff issued a late request for additional information requesting the applicant to

address the aging impact management of this cable at Cooper Nuclear Station and I have Mr. Cliff Doutt who addressed the committee before who is going to go ahead and talk about that.

MR. DOUTT: Unless there's anything else?

MR. TRAN: You good? All right. Next. The staff identified one confirmatory item for the metal fatigue analyses described in the license renewal application. The staff position is that either 2007 NUREG methodology should be used for a nickel alloy component or demonstrate that the use of the 1995 NUREG be conservative for calculations of the environmental corrective factor for nickel alloy 600 components.

The applicant responded with commitment to perform analyses using the 2006 NUREG, two years prior to the period of extended operations or repair or replace the affected components. Okay? All right?

MEMBER SHACK: Too bad we don't have a way to withdraw old NUREGs.

DR. HISER: We have actually found a few plants that have used this recently.

MEMBER SHACK: It's a great piece of work in its time.

MR. TRAN: Okay, so in conclusion the staff

determines that the requirements of 10 CFR 54.29(a) have been met for the license renewal of Cooper Nuclear Station.

MEMBER STETKAR: Thank you very much. Questions from any of the members for the staff?

(No response.)

MEMBER STETKAR: Thank you. Do we have any member of the public? Any questions, comments?

MR. BUMAN: If I may, let me try this a third time. Modern technology being as it is, we have some communications. 246 was the total number of socketing butt welds. 170 is the full number of --

MEMBER STETKAR: 1-7-0?

MR. BUMAN: 1-7-0 --

MEMBER STETKAR: Maximum small bore socket welds. Your last answer? Good. Thank you very much for clarifying.

MR. BUMAN: My apologies.

MEMBER STETKAR: No. Thank you very much and I would like to thank the applicant and the staff for a very good and again, efficient, timely presentations, and with that Mr. Chairman, seven minutes ahead of schedule, I will turn it back to you.

MEMBER CORRADINI: That was because of me wasn't it?

(Laughter.)

MEMBER STETKAR: Oh yes, and thanks to you Dr. Corradini for leaving me my --

MEMBER CORRADINI: Only going over an hour.

CHAIRMAN ABDEL-KHALIK: At this time we will break for lunch. We will reconvene at 1:15.

(Whereupon the above-entitled matter went off the record at 12:07 p.m. and resumed at 1:14 p.m.)

CHAIRMAN ABDEL-KHALIK: We are back in session. At this time we will go to item number four on the agenda, Final Safety Evaluation Report Associated with the License Renewal Application for the Duane Arnold Energy Center and Dr. Bley will lead us through this discussion.

MEMBER BLEY: Thank you Mr. Chairman. This one looks a lot like the one we just talked about. We had a subcommittee meeting on Duane Arnold back in June, June 8, Duane Arnold, the MARK-1 BWR. They have had both their 5 and 15 percent power uprates. When they were here to see us there were two open items: socket welds and buried pipe.

There was one other issue that generated a lot of discussion and that was the 15,000-some indications on the torus coatings, but they have told us at that time that they are actually going to recoat

the torus surface in 2012 I think. That's the date on that.

So these have now been closed and we look forward to hearing about that. I'll pass it on to Brian Holian from staff.

MR. HOLIAN: Good. Thank you Chairman and subcommittee. Well, the staff seems to be here again this afternoon for my second presentation today on license renewal, but if that's an indicator of kind of a high quantity time that the staff is going through. We have 15 applications in house now and these two, both Cooper and Duane Arnold were on very similar schedules and the staff was able to deal kind of very efficiently with the similar questions and issues.

MEMBER SHACK: And consistency.

MR. HOLIAN: And consistency,. That's right, it helps in consistency.

I will just do brief introductions. The agenda today is my brief introductions and then I will turn over to the staff of Duane Arnold for their presentation which will be followed by the NRC staff and their independent presentation.

To my right is Melanie Galloway, deputy director, division of license renewal. To my left, Bo Pham, the projects branch chief again, that also has

Duane Arnold, similar to Cooper. So both of these plants have been in that branch throughout the period.

I would like to highlight one other individual in the crowd and that's my boss, Cynthia Pederson from region III, deputy regional administrator. She has been in for several months acting as the deputy office director at NRR so I highlight that too here today, also.

With that I will turn it over to Mr. Chris Costanzo, site vice-president.

MR. COSTANZO: Thanks Brian. And good afternoon. As Brian had mentioned, I am Chris Costanzo. I am the site vice-president at Duane Arnold and I want to thank you, Mr. Chairman and the rest of the ACRS Board members as well as the NRC for this opportunity to present Duane Arnold's license renewal application.

I would like to take this time and opportunity to introduce my great staff and something interesting, if you say Ken, that represents almost 50 percent, so we will have to watch that during the presentation.

But to my right, I have Ken Kleinheinz, who is the engineering director. To my left, Ken Putnam has been the project manager for this license

renewal and to his left is Mike Fairchild and Mike is a part of the electrical lead. And over on the right hand side I have Clara Rushworth. Clara is the licensing lead, Ken Chew, which is the civil lead. And we also have Eric Sorenson which is the project engineering and Curt Bock, which is our mechanical lead.

Today's agenda is: background -- we will take a look at the operating history; we will take as well a look at the license original project overview; and our ACRS license submittal. Some followup items from various piping as well as small bore piping as we have already mentioned, and as well, low voltage cable testing.

To my right, Ken will discuss some of the operating history and to my left, Ken Putnam will talk about a couple of the technical issues associated with this.

A little background from Duane Arnold. We are approximately six miles north-west of Cedar Rapids, Iowa. General Electric our NSSS systems as well as our turbine generator. Bechtel is our architect and engineer as well as our constructor, and as we had mentioned we are BWR MARK-1 containment, 1912 megawatts thermal and about 630 megawatts

electric.

We do use the Cedar River as our ultimate heat sink for water make-up and we do have forced draft cooling via our cooling towers.

And we have approximately a staff of 610 and that does represent as well our security force, which are employees of NextEra Energy.

A little bit of background and the plant's status. Our startup from the refuel outage was in March of 2009. The current plan status: the plant is running very well. We are in part of our coast-down and we are performing several load line adjustments right now. I think this morning we had approximately 87 percent into a 12-hour hold for some fuel conditioning and back to 100 percent, but do expect within the next week to start our coast-down and our derate for our upcoming refueling outage which is on October 23.

I will pass that over to Ken, and he's going to talk a little bit about the operating history.

CHAIRMAN ABDEL-KHALIK: Is there any questions real quick for Chris before we move on?

MEMBER RAY: Well yes, you referred to the river as the ultimate heat sink and they you referred

to evaporative cooling, which made it sound like the atmosphere is -- you make up the cooling towers?

MR. COSTANZO: Yes, we make up approximately 6,500 gallons a minute.

MEMBER RAY: The way I think about it is then the atmosphere is the heat sink and the river is the make-up source.

C Okay.

MEMBER SIEBER: All operations --

MR. COSTANZO: Yes. For normal operations, that's right.

MEMBER SIEBER: The ultimate heat sink is the river.

MEMBER RAY: Is it?

MEMBER SIEBER: Yes.

MEMBER RAY: So they don't have a safety related evaporative cooling tower.

MR. COSTANZO: No, they don't.

MEMBER SIEBER: I think those cooling towers are wood, right?

MR. KLEINHEINZ: Primarily wood, yes.

MEMBER RAY: Well, sometimes they have a little --

MEMBER SIEBER: Safety related wood --

MEMBER RAY: It's all right. I got it now.

MR. KLEINHEINZ: I will get started again. My name is Ken Kleinheinz. I am the engineering director at the site and I will be going over slide 6. And on that slide we show a brief timeline of the history of the plant with regard to its operating license and that history started in 1970 when the plant received a construction permit from the Atomic Energy Commission and the plant was owned by Iowa Electric part of that time, with minority ownership from Central Iowa Power Cooperative and Corn Belt Power Cooperative.

Four years later, 1974, operating license DHR 49 was issued by the commission and then one year after that, in 1975, we officially went into commercial operation.

In 1985, as the Chair mentioned, we had our five percent stretch uprate at that time, and then in 2001, we were the first plant authorized to go to full extended power uprate of 120 percent of original rated thermal power.

Now we were authorized in 2001 and got approval for that. We implemented that extended power uprate in a very deliberate manner over about an eight-year period. We installed roughly 30 modifications to support that for equipment upgrades,

the largest of which were we replaced a high-pressured turbine rotor, our main transformers, replaced six speed water heaters and both condensate pumps and then like I said, 25 other mods not quite so big.

The final phase of upgrades we made just during our spring out age of 2009 and then in March 25, 2009 we finally achieved the full uprate in power. So like I said, it took place over many years, very deliberate and very uneventful.

MEMBER ARMIJO: Are you still using the original dryers or did you upgrade those?

MR. KLEINHEINZ: No, we still have our original steam dryers.

MEMBER ARMIJO: Okay.

MR. KLEINHEINZ: The plant was purchased in 2006 by Florida Power & Light and the license was transferred at that time and then since then you have heard probably both terms now, FLP Energy became NextEra Energy so that is who owns us currently.

In September of 2008, just over two years ago, we made our initial submittal for our license renewal and this brings us here today, hoping to extend our license which -- February 2014. Is there any questions about the materials on slide 6, the operating history?

Okay, hearing none, I am going to turn over discussion next to our license renewal project manager, Ken Putnam.

MR. PUTNAM: Yes, I am the project manager for license renewal. I will be going over just a real brief overview of the project and then covering the technical items of interest.

Our project, pretty much like everyone else is there. We did the scoping process consistent with the guidelines of NEI 9510. We used site control databases, controlled drawings in our design and licensing documents to do that scoping.

Those line up real well with the safety related and the regulated events and scoping was straightforward for that. For non-safety equipment affecting safety, that's a little bit different, so we had to go use a more conservative approach for that. We used the spaces approach for that to get -- so that any area that contains safety related equipment, we considered the non-safety related equipment in that area as potentially affecting the safety related equipment and evaluated it that way and then we did walk downs to make sure that the input data, there wasn't anything out in the field that was a surprise compared to the drawings in the database.

For some equipment it was better to do it on a commodity basis like electrical equipment for the most part is done on a commodity basis rather than a tag number. Next.

The rules of course require that we take a look at time limited aging analysis. We did that. We had very good information available to our from our licensing bases, which allow us to search out things that potentially could be time limited aging analysis.

Some of the things that we looked at was neutron fluence of course is time based. We did do a new model for fluence using the RAMA methodology. We selected 54 effective full power years. That will take us out past the calendar years of 60 years, but we used that to calculate new pressure and temperature curves for the vessel, verified that those would come out acceptably.

We did update our thermal cycle projections out to 60 years. We used the number of cycles accumulated to date when we did the analysis and then projected forward at the rate they were currently accumulating.

In a few cases we thought that might be too optimistic so we added in conservatism on top of those. For example with respect to scrams, we added in

quite a few extra, since you don't have really control for those, 100 percent, on when those occur as opposed to some others that are pretty predictable, like how often you refuel or something like that.

MEMBER SIEBER: How did you determine the thermal cycles in the early parts of plant lifetime?

MR. PUTNAM: We went back --

MEMBER SIEBER: Do you have records?

MR. PUTNAM: Yes. You know, up until 1998, those weren't -- there was no requirement to track those then we converted to improved tech specs and that time we had to start tracking them, so we had a fairly extensive project then to go back and count up those past numbers. We went through plant records, startup and shutdowns, operator logs and collected that the best we could to come up with an accurate count for those through nineteen ninety -- and since 1998, we have been counting those every cycle.

One new thing for us of course was we had to look at environmental effects on fatigue. We did do that. We looked at the locations required for a plant of our vintage under NUREG/CR-6260 and then we evaluated that with the environmental adjustment factors from the other NUREGs and verified that all the locations came in with an accumulative usage

factor less than one.

We also -- EQ, environmental qualification of electrical equipment, of course, all those were done looking at a 40-life so we updated those files and those calculations to match a 60-year life. Next.

Ultimately, in this whole process, where we were really heading was to come up with what programs did we need to manage aging of passive components of plant.

We ended up with 43 aging management programs that we identified we needed. Nineteen of those are currently in place without any real changes needed. Those -- we just need to keep doing what we are doing.

Ten of the programs are existing programs but they needed enhancements of some sort. Typically are those are either we added to the scope of those programs, added more components in, or we had to add more rigorous acceptance criteria to the programs.

We have 14 new programs we identified and in some cases they are really new programs and in other cases we may be doing maintenance tasks that are very similar to them now, but there's no program overview for them, so we called those new programs.

In comparing ourselves to the GALL generic

guidelines there, we found 28 of our programs to be consistent with the GALL. In 11 cases we needed to take exceptions to the GALL. Those really fell into three main categories. Either the industry guidelines related to the topic had been updated since the GALL was issued and so we were implementing a newer version of the guideline, or our design was just plain different than what the GALL assumed or in a few cases, the frequencies specified in the GALL didn't match up with the way our plant was operated so we made adjustments there.

We did identify four plant-specific programs, several of which were plant-specific at the time we submitted -- by the time GALL Rev 2 is out I think three of those four won't be plant-specific. Those will be generic. But at the time we submitted, they were plant-specific programs.

One plant-specific program, electrical penetration assembly program, is kind of a narrow set of components that hadn't been updated at all so we had to have our own program for those. Next slide.

MEMBER SIEBER: What has been your experience with -- have you found degradation or missing pieces or --

MR. PUTNAM: No. No. We have two different

kinds of racks. We have one newer set of racks that we have coupons that we have been testing over the years and we have always gotten good results on those. No problems at all with those. The older racks did not have coupons so we don't really have test data on that so we have committed to performing in situ testing of those.

MEMBER SIEBER: And how are you going to do that?

MR. PUTNAM: We are going to use -- I anticipate we will be using a BADGER testing. It's where they lower a source in one cell and monitor what is attenuated out the other side.

MEMBER SIEBER: What about corrosion, mechanical difficulties, have you noted any of those in your examination of the old racks?

MR. PUTNAM: No.

MEMBER SIEBER: Okay. Thank you.

MR. PUTNAM: We ended up making 53 regulatory commitments for license renewal. Those have been entered into our site tracking system just like any other commitment. We do recognize that those are extensive and are going to need special attention to make sure they have been implemented prior to the period of extended operations.

To help with that we are retaining a portion of our project team that did the license renewal application to assist the program owners in implementing, and in a few cases we are going to have to do specific projects for the larger items to make sure they get the right management oversight and resources to succeed. For example, recoating the torus is -- deserves its own attention -- all of its -- all along.

Moving on to our open items from the -- at the time of the subcommittee review. The first one is buried piping. I am not going to go over the issue. It's the same as it was for Cooper. We did commit in our resolution to that to enhance our program to include periodic inspections of each material on environment combination and prioritize piping containing hazardous material.

We also, subsequent to the subcommittee meeting, we did have a leak develop on our fire protection header. That was -- so that's operating experience directly for us. That was due to pitting corrosion on the exterior of some ductile iron cast pipe.

So in response to that we did single out ductile cast iron for its own set of inspections and

not grouped it with cast iron.

MEMBER STETKAR: Ken, was that section where you developed the leak, was that nominally coated or wrapped or something or was it just --

MR. PUTNAM: It is not coated or wrapped. It has what they call an aesthetic coating. It's not intended for service protection.

MEMBER STETKAR: Was that the case with all of your fire protection piping?

MR. PUTNAM: I think that would be typical for fire protection for us, yes.

MEMBER ARMIJO: Was that piping protected with your cathodic protection system?

MR. PUTNAM: That area would not be protected by cathodic protection.

MEMBER ARMIJO: Okay.

MR. PUTNAM: That area seemed to have more corrosive soil than other locations on site as well, when we tested the soil in that area. We have got some more work there to decide exactly where we are going with all the corrective actions for that yet. Obviously it was repaired and we inspected the areas adjacent to it, but that's something we will be doing more work with.

MEMBER ARMIJO: Is it your intent to

protect those kinds of in-scope piping, cathodically, where you have had problems before?

MR. PUTNAM: I don't know the answer to that yet. Eric, I don't know if you want to jump in here, but I don't think we have finished our decisions on that, on what corrective actions will be there.

MEMBER SIEBER: Have you determined or even investigated why the soil chemistry is different in that area than other places on the plant site? Or do you know that that is a singular area and you don't have other areas on the plant that are similarly -- have a similarity in chemistry?

MR. PUTNAM: Do you want to answer Eric?

MR. SORENSON: This is Eric Sorenson for Duane Arnold. We did a complete soil sample survey over the summer, with about 18 different locations, and then when we had this area, we did indeed take a soil sample of this area. And of all the soil samples that we gathered this is the only one that shows a high corrosive environment. All the others we have characterized as moderately corrosive or mildly corrosive environment, which is typical I think for the soil in our area.

MEMBER SIEBER: What makes it highly corrosive? What did you measure, pH or did you do a

real technical analysis.

MR. SORENSON: Yes, we sent it offsite to a vendor who specialize in doing the soil sample analysis so he did that for us, so that one of the reasons that we found that this had a higher, potentially has a higher corrosivity, is this is right under a road. So we probably picked up some salt from the road, into the soil.

MEMBER SIEBER: At plants that I worked at, because of all the stainless steel, we did not use salt on the plant site.

MR. PUTNAM: And we also will -- in addition, we added commitments to maintain our existing cathodic protection system reliable at greater than 90 percent availability and to do periodic NACE surveys of that system.

CHAIRMAN ABDEL-KHALIK: I guess there was a question earlier as to whether or not you were going to extend cathodic protections to areas in which you have actually had a leak.

MEMBER ARMIJO: Yes, that would make sense.

MR. SORENSON: This is Eric Sorenson. One of the actions that came out of our cause evaluation for the area was to go back and do a complete area survey of the extent that we do have cathodic

protection and look at how we want to protect this piping. Part of the common cause showed that the piping failures that we have had this year are in areas that are not coated nor in cathodically protected areas and that basically is, looking back in our history, is the only areas that we have seen of pipe failure issues in our well water system or in our fire protection system.

So we will be looking at how we are going to protect the piping, whether it be a coating system or whether it be a cathodic protection system as part of our evaluation products.

MEMBER ARMIJO: Well, there are some people that do both.

MR. SORENSON: Yes.

MEMBER ARMIJO: Is that it? You are going to consider that as well?

MR. SORENSON: Yes, we will consider it and the other aspect too is that we identified with this particular piping system, is this is not original piping system that was installed. This was installed with modifications that we made to add out-buildings to the plant, specifically our plant support center and our training center.

So this was tap-offs from our existing

fire protection system and the other leak we had was on a well water system which is a new well that we added. And one of the things is that looking at the EPRI documentation that we examined, it was one of the other conditions, looking at the fill that we actually used to protect the pipe and we have to go back in and these particular lines were not installed with the same fill as we originally installed.

So I think in some instances, the fill is part of the problem too, is we allowed bigger rocks to come in contact with the piping and actually initiate the defect location .

MR. COSTANZO: So I think to summarize that, we will take actions obviously to evaluate whether or not the additional protection is needed for the extent of the condition from the pipes and the pipes that we had the failures in.

MEMBER STETKAR: You mentioned that these particular lines, both the well water and the fire protection line, were from more recently installed facilities than day one. About when were they installed?

MR. SORENSON: In the mid-`80s.

MEMBER STETKAR: In the mid-`80s.

CHAIRMAN ABDEL-KHALIK: And when do you

expect that root cause evaluation to be completed?

MR. SORENSON: The common cause wasn't completed and we have an action I believe by April to complete the further studies.

CHAIRMAN ABDEL-KHALIK: I beg your pardon?

MR. SORENSON: In April we will complete the further studies so that we know what other protective measures we want to take for that piping system, or the extent of excavation and replacement that we will be targeting.

MR. PUTNAM: The next item is socket welds again. At the time of our application, there was no qualified volumetric exam technique for socket welds. The staff has emphasized to us that they think that there are things that can be tested on socket welds volumetrically that will yield the useful information, even if they are not fully qualified.

So in response to that we have committed to perform volumetric exams of 10 percent of our class 1 socket welds. We will either use an industry-qualified exam technique, if it's available at the time of exam, or if no qualified exam technique is available at the time of the inspections, we will utilize a plant-specific procedure to perform that evaluation and that will be obviously, will be limited

to the technology that is available to us.

We will select the sample based on susceptibility and our ability to inspect and dose considerations and operating experience.

MEMBER STETKAR: You know the question is coming.

MR. PUTNAM: 118.

MEMBER STETKAR: Twenty eight is 10 percent or 28 --

MR. PUTNAM: We have 118 socket welds so it's -- this commitment is effectively to look at 12 socket welds each interval.

MEMBER SIEBER: And that's what, six inches or less?

MR. PUTNAM: Four.

MEMBER SIEBER: Four inches or less . Thank you.

And you will be able to detect not only fatigue cracks, but also the issue where the pipe was inserted too far down with a tensile stress because of the welding.

MR. PUTNAM: We haven't written the procedure for performing the test yet. We do intend to walk down the socket welds this outage to make sure we know the, exactly the configurations and the amount of

clearance. For some of the inspection techniques you need some space to get the equipment to work.

MEMBER ARMIJO: Have you ever had any socket weld failures in your plant?

MR. PUTNAM: We had a socket weld failure -- what year was it -- roughly 27 -- 1989. Thank you Curt.

MEMBER ARMIJO: And did you determine the cause of that failure?

MR. PUTNAM: It was a fatigue related failure that we attributed to vibration and pit-up, as I recall, that it had not pit up.

Next. Exact same items you discussed with Cooper this morning on low voltage cables that the GALL Rev 1 doesn't require testing for cables less than 2,000 volts or if it's not normally energized. Staff has information there that they collected under generic letter 2007-01 that says hey there are still failures out there in the industry and they may have some relationship to being submerged in water.

In response to that we did commit to expand the scope of our program to all 480 volts -- over all power cables in scope 480 volt and above and whether they are energized normally or not. That didn't add a whole lot.

MEMBER STETKAR: I was -- a couple of questions. I just want to make sure I understand the three bullets under the resolution. Are you going to be inspecting 480 volt to 2kV cables regardless of whether they are energized?

MR. PUTNAM: Yes.

MEMBER STETKAR: Even de-energized?

MR. PUTNAM: Correct.

MEMBER STETKAR: Okay. I just wanted to understand why only the two to 35 it says not energized.

MR. PUTNAM: I made it slightly -- maybe I didn't word that real well.

MEMBER STETKAR: But the commitment is to inspect 480 through whatever voltage --

MR. PUTNAM: Right.

MEMBER STETKAR: regardless of whether they are energized. Okay. Good.

MR. PUTNAM: Yes, because the original program was for only if you were energized a high percentage of the time.

MEMBER STETKAR: It's 25 percent of the time or more and yada yada yada but I just wanted to understand whether or not for some reason you were excluding de-energized 480 to 2 kV for some reason, so

good.

And you started to say did the addition of the 480 volt cables add a substantial number of manholes or new cables?

MR. PUTNAM: Mike, do you want to take that one?

MR. FAIRCHILD: This is Mike Fairchild for Duane Arnold. We added six manholes with that. Four of the manholes were out to our off gas tank, which only has a 480 volt feed. So that was a given once we added the 40 in. The others, two that we added had 480 volt cables or 4 kV cables in them, but they were not normally energized. When we added the normally energized we got them both from the 480 up and for the energized 4 kV cables. And that is between our power block and our pump -- where some of our PC Zales (phonetic) pumps are.

MEMBER STETKAR: And remind me, looking at my notes, Duane Arnold -- do you have sump pumps in any of your manholes or cable ducts?

MR. FAIRCHILD: We have sump pumps in three manholes between the main plant area and our intake structure. The ones up in the main plant area did not have currently have sump pumps. We are looking into putting in sump pumps to help us on our inspections

because our lids are about 1,000 pounds each so it takes a crew to move them to do a visual inspection.

MEMBER STETKAR: I assume when you are looking at sump pumps you are going to look at sloping of the intervening ducts so that water drains to where you put the dump pump?

MR. FAIRCHILD: Right, that's one of our problems right now, is we have got water going into a non-safety related manhole that drains to a safety related manhole.

MR. COSTANZO: And a couple of those so it's a combination of both putting extensions on the actual manholes themselves as well as putting sump pumps in. The one that Mike is referring to, we have a commitment to by the end of this year to fulfill that. It's basic remediation and progress type stuff.

MEMBER STETKAR: All right. Any other questions?

MR. PUTNAM: I think that was the end of our prepared remarks.

MEMBER ARMIJO: Could you summarize the status of the piping and internal material, welded stainless steel piping, what your program is to address stress corrosion cracking both IGSCC and IASCC?

MR. PUTNAM: That's a broad question there.

MEMBER ARMIJO: Yes, I know you have done a lot but I don't know precisely what you did.

MR. PUTNAM: Well, obviously we have hydrogen water chemistry that has been in implementation since 1988, somewhere in the `80s, on noble water chemistry and then of course we are doing the inspections required under BWRVIP and the ASME code.

MEMBER ARMIJO: Are you following the EPRI materials for reliability program guidance?

MR. PUTNAM: That's primarily a PWR --

MEMBER ARMIJO: BWR owners.

MR. PUTNAM: The BWRVIP definitely.

MEMBER ARMIJO: Did you replace your recirc piping at all? Are you still using the original?

MR. PUTNAM: It's still the original.

MEMBER ARMIJO: Okay.

MR. PUTNAM: We did the safe end repairs in 1978 or something.

MEMBER ARMIJO: Same thing with core spray lines?

MR. PUTNAM: Core spray lines have not been replaced.

MEMBER ARMIJO: Okay, so you have been

pretty lucky that you haven't had any problems but you are addressing it primarily with water chemistry?

MR. PUTNAM: That's true.

MEMBER ARMIJO: Okay. And you will continue to inspect periodically as part of your regular, ongoing program.

MR. PUTNAM: We did do induction heat stress improvement as part of the process.

MEMBER ARMIJO: Okay.

MR. PUTNAM: And we have a few that have been weld overlaid.

MEMBER SHACK: And that's enough to get you out of the enhanced inspection for 0313 with the two remediation measures for your piping inspections?

MR. PUTNAM: Yes.

MEMBER SHACK: Yes.

MEMBER ARMIJO: And when you did your power uprate, did you have any commitments for more inspection of your steam driers?

MR. PUTNAM: We inspect the driers every outage in which there is an increment in the power level, which as Ken mentioned, we happened to do that basically every cycle. We have made a mod that allowed us to go a little bit higher in power.

And so we have done inspections every

outage since --

MEMBER ARMIJO: And you have found no problems or --

MR. KLEINHEINZ: We actually found one tie bar on the top of the steam drier with a crack in it last outage.

MEMBER ARMIJO: That's what is being repaired this outage.

MR. KLEINHEINZ: It will be prepared here in about three weeks.

MEMBER SIEBER: What about general erosion?

MR. KLEINHEINZ: Maybe Curt knows more about that one, but I know of no general corrosion on the steam drier. There's minor indications of --

MEMBER SIEBER: Erosion.

MR. KLEINHEINZ: from fabrication -- or erosion.

MEMBER SIEBER: Yes. You know, because it's wet steam there.

MEMBER SHACK: You attribute the cracking on the rebar to fatigue?

MR. KLEINHEINZ: Yes, I am pretty sure that was the conclusion, was it was fatigue. I can't remember the VIP criteria it fell under that allows us to do the repair we are doing, but it was analyzed

using the VIP guidelines.

MEMBER SHACK: You were the guys with the torsional guided waves for the buried piping. Have you had any more experience in actually using that since the last time we talked to you?

MR. PUTNAM: Yes, in the last week we have done I think like 12 or so additional guided wave exams. We did -- we were looking at river water supply and piping in the last week and we took that opportunity to inspect additional areas with that.

MR. KLEINHEINZ: I think it's worth describing a little bit what has happened, because a lot has happened in the last two weeks at the plant with that. If you recall we described use of guided wave but we hadn't done any direct exams based on any results at that time. But one of the results was there's -- guided wave gives you an indication. It doesn't tell you what it is. It tells you about where it's at.

So we did excavation last week and into this week on one of our river water supply lines where there's an indication just outside our pump house. And we opened up -- we did about a 10 foot section and did a four foot maybe length of UTs in an area where the guided wave had pointed us, and there was some general

corrosion over that area.

But the thinnest -- and we had gridded these spots on most six by six grids -- there's two grids that had -- the lowest was 70 percent of nominal wall and most were still around the 90 percent. So it was actually fairly favorable for 34 old carbon steel pipe. And this was pipe with a tape coating on the outside so that was really what you are looking for when you do the buried pipe inspections is how well has your coating held up and that held up very well, the external surfaces were in very good shape.

MR. PUTNAM: Yes, the loss of material was on the inside of the pipe.

MR. KLEINHEINZ: Yes, which is a fairly standard corrosion loss rate for our carbon steel systems for service water. So we have some results. Those were known maybe Monday of this week. We are doing another set today on another section of pipe just a few feet away, so I don't have -- unless it's on my blackberry I don't have the results right now on that.

MEMBER SIEBER: Do you have any issues with the MICK TACK?

MR. KLEINHEINZ: I can't say we have any significant problems with MICK at the plant. Service

water is fairly aggressive there, mostly on our non-safety systems. We do chemically treat a lot of the service water systems that preclude MICK.

MEMBER SIEBER: Kills off the MICK.

MR. KLEINHEINZ: Yes, but in some of the non-safety systems, they have required repairs over the years, replaced pipe replacements, most -- all carbon steel.

MEMBER SIEBER: Do you treat with chlorine?

MR. KLEINHEINZ: Chlorine and bromine now.

MEMBER SIEBER: Okay.

MR. KLEINHEINZ: Bromine hasn't always been there but chlorine pretty much throughout the plant cycle.

MEMBER SIEBER: Chlorine is cheaper.

MR. KLEINHEINZ: Yes.

MEMBER SIEBER: Okay. Thank you.

CHAIRMAN ABDEL-KHALIK: Well, now that you have fully implemented your 15 percent power uprate, will you continue to inspect the driers every outage?

MR. PUTNAM: I think the frequency changes if you are not doing an incremental change. I don't know --

MR. KLEINHEINZ: I would expect yes, simply because normally when you find any indication on the

driers, it usually drives you back to do a reinspection the following cycle. So I expect we will probably end up inspecting our driers nearly every outage, in some form, yes.

CHAIRMAN ABDEL-KHALIK: I mean, given the fact that the first time you saw a crack was when you got very close to your full implementation --

MR. KLEINHEINZ: I mean there are -- I don't know if I would call them cracks, but there are many cracks in the drier from initial construction, basically that had been there the life of the drier that we go back and inspect routinely. The tie bar though I think is a fairly thin strip of metal along the top of the drier that we found that crack in. I don't know if that's inspected every outage or not to be honest. Basically I don't think we attributed it to power uprate is what I am saying.

MEMBER ARMIJO: What else could have caused it, just old age?

MR. KLEINHEINZ: Yes, the age.

MEMBER ARMIJO: I don't know what's more troubling, just age being the cause or the power uprate.

MR. KLEINHEINZ: Age is obviously an issue and the major input to the license renewal.

MEMBER SIEBER: It's hard to say. Hard to say what causes it, old plant had a power uprate, could be either one or something else.

MEMBER STETKAR: One more before you -- only because I ask it after you leave the table anyway. You mentioned that you had experienced one -- I'll call it failure or cracking, something of a socket weld many years ago. Did you do any additional examinations or destructive examinations of other welds when you discovered that, to look for other indications or did you simply replace that?

MR. PUTNAM: You know, I think we replaced that one, refabricated that one and then we inspected the brother on the other recirc loop but we didn't do any destructive exams of the nature of the Cooper -- that Cooper did there.

MEMBER STETKAR: Thanks.

MEMBER BLEY: Anything else? Thank you very much. Ready to move on to your folks Brian.

MR. HOLIAN: From left to right there's Bill Holston, senior mechanical reviewer, primarily to address buried piping type issues and where we are going with that program; Dr. Allen Hiser, our senior level adviser, who has been following the small bore and other technical issues on this plant and other

plants in license renewal; Brian Harris is the project manager who has had this plant throughout and he will be starting the presentation; and Cliff Doutt covering electrical issues.

With that, I will turn it over to Brian Harris.

MR. HARRIS: Okay, do good afternoon everyone. my name is Brian Harris and I am the safety project manager for the Duane Arnold energy center license renewal application.

Along with the panel seated here today, are members of the technical staff who participated in the review of the license renewal application or/and audits that were conducted at the applicant's facility.

So just to give you an overview here, I'll begin my providing an overview of the staff's review, then I'll discuss the closure of open items followed by an additional issue to the SER and conclusion.

The staff issued the SER with open items on May 7, 2010. There were two open items: open item 3.0.3.3.3 was related to socket welds in the small bore piping program; and open item 3.0.3.1.7 was related to buried piping and tanks inspection program which will be discussed later in this presentation.

There was also an additional issue related to inaccessible power cables in the inaccessible medium voltage cables program. And there are no confirmatory items. Next slide.

So that, as the applicant mentioned earlier in their presentation, an open item was identified related to the management of small bore piping socket welds. During the review, the staff indicated to the applicant our concern that a visual inspection would be inadequate and it would not indicate flaws initiating from the inside downward.

This concern stemmed from the staff's review of industrial, of history operating experience where failures in small bore piping socket welds had resulted in unplanned shutdowns.

The applicant provided an RAE response for submit to resolution. The staff performed a review of the applicant's commitment to perform periodic volumetric inspections of welds each inspection interval.

The ASME code class 1small bore piping inspection program will include provisions that a destructive examination may be performed on an opportunistic basis in lieu of the socket weld volumetric examinations. The staff found this

enhancement acceptable and this item is closed.

MEMBER BLEY: Brian, I am just a little curious. In their response they had point out that there isn't an industry accepted approach, right, for doing the volumetric exams. Do you know how you are going to decide whether what they are doing meets what you want from them?

MR. HARRIS: I'll have Dr. Hiser --

DR. HISER: There is no industry qualified program if you will.

MEMBER BLEY: Right.

DR. HISER: If a program is developed by EPRI and our understanding is there is an industry-wide program that EPRI has undertaken to try to develop inspection methods that will work for various diameters and wall thicknesses, if that does not come to fruition as indicated by the applicant they would develop a site-specific approach and the criteria that we have specified is that the technique has to be capable of detecting the degradation of interest.

So if, for example, stress corrosion cracking is the type of degradation, they would need to have a technique that could detect stress corrosion cracking. That would be a plant-specific program. It would be subject to regional inspection just like all

the other inspection activities that licensees implement.

MEMBER ARMIJO: And given the lack of a developed inspection procedure that you can rely on, are you flexible on the detection limits, in other words are you looking to detect something that is half-way through wall or --

DR. HISER: Well, we are looking for --

MEMBER ARMIJO: or what?

DR. HISER: for pretty much anything that is detectable. One of the issues has been the ability to size depth the cracks, how deep are the cracks? And from our perspective, depth sizing really relates to can I leave the flaw in place or do I need to do a repair? From our perspective we care about the ability to detect degradation.

So in essence a go, no-go test is something that we find to be acceptable. If they find degradation, it's up to them to then characterize it or do a repair or replacement. But from our perspective, in terms of detecting degradation, we are happy with the go no-go test.

MEMBER BLEY: And currently, there are tests that could do at least much?

DR. HISER: We know that there are various

licensees who have developed plant-specific tests. In June, several of the staff were at the EPRI NDE center. We saw a phased array approach developed for one of the plants that is in license renewal right now and that seemed to get phenomenal results.

Now that was for specific pipe diameter and wall thickness. I believe the wall thickness was maybe a little bit greater than a normal small bore pipe would have. So maybe we had a little bit more favorable conditions, but I think it's what pushed the industry to go to a broader program to be able to inspect more diameters and wall thickness sizes.

DR. HISER: That helps. Thanks.

MEMBER BLEY: Okay.

MR. HARRIS: Moving on to the next --

MEMBER STETKAR: Before you move on, I just -- I hate to keep doing this, but for consistency. We heard this morning that Cooper had experienced three cracked class 1 small bore socket welds out of a population I think we finally settled on 170, which granted there's different susceptibilities, but if I just do math, that's 1.8 percent. They did 12 destructive examinations which gave you some level of confidence that it was of the quality of current status anyway, and they have committed to examine

three welds per inspection interval or miraculously, 1.8 percent.

Duane Arnold had experienced one crack of 118 or 0.8 percent, different than 1.8 percent. They did no destructive testing and they are going to examine 10 percent. I am trying to figure out what algorithm is used for this process. I recognize that there is plant to plant variability and that the decisions are made on a case by case basis, but the difference between 1.8 percent and 10 percent -- both applicants by the way saying they are using some sort of risk-informed approach to focus on the more susceptible welds to examine -- seems to be a fairly large variation.

DR. HISER: It is and I think in the case, again, going back to Cooper with the 12 destructive examinations that they did, the confidence that that gave us was just very high confidence.

In the case of Duane Arnold they hadn't done any destructive examinations and --

MEMBER STETKAR: So basically it hinges on that --

DR. HISER: Well, it hinges on what they did, have done previously in terms of destructive examinations, NDE, plant operating experience, the

fact that for example Duane Arnold finding the one crack I think it was about 26 years ago and not having any failures since then again is, I think, Is confirmatory that the fix that they have put in place then has been effective.

So from that perspective, is there numeric consistency? You probably -- you may fid numeric consistency but that isn't necessarily our target. Ten percent is probably a number you will see in the future for many plants because it is sort of gives a warm and fuzzy. With this plant, with 118, that will be about 12 welds every 10 years. That's a fairly reasonable population, we believe.

MEMBER ARMIJO: I thought Duane Arnold reported that they had done destructive examination of the failed socket weld, even though it was 26 years ago and concluded it was caused by fatigue. Was that correct or not?

I mean did they take it into a lab and do metallographic exam to confirm it was caused by fatigue?

MR. PUTNAM: Yes, we examined the one that was broken. We didn't cut out any additional ones.

MEMBER ARMIJO: So at least you know that that was probably the mechanism for that particular

weld and since then, nothing else has failed, but you don't really know the extent to which there might be some small cracks in there?

DR. HISER: That's correct.

MEMBER ARMIJO: And so you are going to require more.

DR. HISER: Yes, that's correct.

MR. HOLIAN: Just to add to that. This is Brian Holian and maybe repeat the comments from this morning on the same subject, on the consistency. To give it a little bigger perspective again, is the staff, Dr. Hiser, the branch chief, Bart Fu who you heard from this morning, really themselves pushing this issue to get it back away from an opportunistic, maybe one-time inspection which was a visual of a couple of years ago, to at least starting to get a more in-depth look at these.

They did quite a bit of look at operating experience across the fleet to a point that these issues are causing plant shutdowns. We have taken that to NEI at our quarterly meetings and so it's been a targeted, year-long review to get them to here.

But we recognize the ACRS comments and we welcome them. We do have in-house, for all 15 plants that are in-house, we have tables comparing the

response, both on small bore piping, on buried piping and even the electrical issues, low voltage cabling and that.

And we are comparing them all, looking them in the face, making sure that our lucky operating history --

MEMBER STETKAR: That's encouraging.

MR. HOLIAN: gives an issue here as we bring them all along.

MEMBER STETKAR: You know Brian, we are going to have a subcommittee meeting on the GALL report. It might be useful if --

MR. HOLIAN: That'll be a good item. I think we have enough back-up slides but we can bring them on up to you.

MEMBER STETKAR: I mean it's not directly related but it's certainly --

MR. HOLIAN: No, but it is, and it'll give the committee kind of additional confidence in the type of review that this staff is doing here. And that being said, we look at each plant does come in with a different argument and a different history and their own different risk aspect to it, but as Dr. Hiser said, you know, on this particular issue o small bore piping, we have them looking now and we expect their

corrective action programs to continue and our regional inspectors will follow that.

MEMBER SHACK: Of course if a licensee proposes 10 percent I don't think you'll go back and strong arm them down to two.

MR. HOLIAN: No. (Laughter.) And we will also gladly -- (Laughter.)

MEMBER STETKAR: I wasn't going to say that.

DR. HISER: But to sort of summarized for buried to the small bore piping, there is no algorithm but there is a philosophical consistency as we go through. We don't have individual reviewers in silos doing their own review and reaching conclusions. We have an integrated effort.

MEMBER STETKAR: I think that's important for us to have some confidence, that at least given the fact that we are taking a snapshot in time here, that that snapshot isn't wildly moving around.

DR. HISER: Well trust me, we do hear from applicants. You allowed plant x to do --

MEMBER STETKAR: I'm sure you do.

DR. HISER: But --

MEMBER ARMIJO: You have a philosophical consistency. It may not be numerically perfect but you

have a logic that makes sense to me at least.

MEMBER STETKAR: Well, and that summary that Brian mentioned might make that somewhat more transparent also.

MR. HARRIS: Moving on to the next issue related to buried piping and tanks inspection program, there have been a number of recent industry events involving leakage from buried and underground piping where the causes have included: coating damage during backfill of piping; failure of fiberglass piping; failure of buried piping in and around piping penetrations; and failure of piping in trenches.

The applicant's program is a new program which is aimed at managing aging effects of piping in direct contact with soil. The program credits incorporation of industry experience later doing the period of extended operation.

The staff needed further information to evaluate the impact that the recent industry events might have on the applicant's program. The staff issued an RAI in May to complete its review and as stated earlier by the applicant, an RAI response supplement for resolution was received and was committed to enhance the program to maintain cathodic protection availability 90 percent of the time,

conduct annual Na soil potential surveys and conduct six buried pipe inspections in 10-year intervals.

The staff finds this enhancement acceptable and this item is closed.

Moving on to the additional issue related to inaccessible power cables, so given the vulnerability of in-scope low voltage cable failures associated with a water intrusion environment, the staff issued RAI B 3.27-7 requesting the applicant to address the aging effect management of these cables.

The applicant responded with enhancement to the non-EQ inaccessible medium voltage cable program, to include low voltage power cables consistent with industry operating experience.

The applicant took into consideration plant operating experience in its selection with its frequency and in addition the applicant revised a program to delete the criterionic exposure to significant voltage.

The applicant's E3 AMP enhancement meets the staff's review criteria and the standard review plan and is consistent with industry and plant operating experience.

The staff finds this enhancement acceptable and this issue is closed.

In conclusion, on the basis of its review, the staff determines that the requirements of 10 CFR 54.29(a) have been met for the license renewal of Duane Arnold Energy Center.

MEMBER BLEY: I want to take you back to something that the applicant talked about. Can you tell us anything about your views or an understanding of this torsional guided wave exam is doing and how -- I don't know if accurate is the word -- but how useful it is for --

MR. HOLSTON: Yes sir, the guided weight tool is an effective tool for screening, to give you a potential idea where you had defects. But we have talked specifically to multiple vendors that use that device and it does not have the sensitivity to detect and tell you exact pipe wall thickness, exact location. So we have accepted the screening --

MEMBER BLEY: But there is confidence in the ability of it to identify at least an indication?

MR. HOLSTON: Yes, we find it is an effective tool when you are risk ranking where you are going to go look to be able to use that tool for screening purposes, but not to -- if they did a guided wave and found no indications, all right now you don't have to go dig and look, it just didn't give you a

good screened point to look at for that piping signal.

MEMBER SHACK: Does it look for volumetric loss. I mean, does it have any hope of detecting something like a crack?

MR. HOLSTON: It's volumetric, yes, and it would not find a crack. No, sir.

MEMBER SHACK: It's looking for wall loss.

MR. HOLSTON: Yes, sir.

MEMBER BLEY: Anything else from the committee?

CHAIRMAN ABDEL-KHALIK: Well, we were told that they found a crack in the steam drier during the March 2009 refueling outage and I don't think I got a straight answer as to whether or not they will continue to inspect the steam driers every refueling outage. Has the staff evaluated this issue?

MR. HOLIAN: I don't know if Dr. Hiser followed up but in general the -- we know they are from the BWVIP program so for the commitments in that, from outage to outage I would expect the region to following up on it as they have said, it's a corrective action issue. I don't know if we have additional information.

DR. HISER: I don't have anything specific. I would expect at least for one or two cycles, the

guidelines would mandate that they should go and look to ensure that there is no repetition of the problem.

MEMBER SHACK: Have you endorsed the VIP guidance for the steam drier inspection?

DR. HISER: That I'm not sure of. We'll find out.

MEMBER SHACK: Okay.

MEMBER ARMIJO: Allen, just to make sure, maybe I should have asked it earlier. Was there -- that crack component in the drier -- was that -- was there a destructive examination of that or was it just repaired, and does the NRC know the results of the exam if there was an exam?

DR. HISER: I'm not aware personally of what sort of root cause sort of examination they did.

MEMBER ARMIJO: Well, maybe Duane Arnold folks can tell us.

MEMBER SHACK: They made the promised they would use some VIP criteria to decide if it was a fatigue crack. That sort of makes it sound like it was just a guess.

MEMBER ARMIJO: They could probably make a more definitive statement.

MEMBER SHACK: Rae they here? Are they going to answer it?

PARTICIPANT: What was the question?

MEMBER SHACK: Was there any metallographic examination or destructive examination of that cracked drier component to verify whether it was fatigue failure or something else?

MR. KLEINHEINZ: Yes, this is Ken Kleinheinz for Duane Arnold, just to address that, the crack component is a thin tie bar that goes across the top of the drier. It's still in place right now. We found the last item and documented an evaluation to prepare for this coming outage. So it's still in place, so no further analysis has been done yet, until it's physically removed and we can take a look at it.

Now the crack was not present when we were at, I'd say, 98.5 percent power I think was where we were at before finally reaching 100 percent power, and by the EPRI guidelines, you have to have a certain -- a larger power uprate between inspections to consider it anything other than fatigue I think is how that was concluded so far. That tells you where in the EPRI program you sit with respect to the crack and let's follow up.

And my understanding of the VIP guidelines, just going back to do you have inspect at every outage, you pretty much have to go back every

outage until you have successive outages or you find no changes and I don't know that we have ever found no changes since the status of indications.

So you are going back and looking at the indications you found over the years and so also some small change so it takes it back again.

MEMBER ARMIJO: Well, you have got a crack component on there and if it keeps cracking, how do you know you don't generate a loose part?

MR. KLEINHEINZ: Of course you won't be able to inspect it until we shut down again, and we would have, by the way, for a loose part, if something is not there. We are putting out a very much more robust design in for this tie bar. I can say that much.

MEMBER ARMIJO: So it's your plan to replace that tie bar?

MR. KLEINHEINZ: That's correct. It will be removed this outage and replaced with a much more robust design with deeper welds and a different type of support. It spans basically divider plates and a design that clamps over the divider plate rather than surface monitoring with tag welds on there so --

MEMBER ARMIJO: But if you could verify by metallographic examination that it's a fatigue crack,

it would go a long way in helping to guide your inspection program.

MR. KLEINHEINZ: That's right, I'm not sure what the requirements are for that analysis, but I expect we will have a good chance of looking at that piece once it's removed and determine finally if it is a fatigue crack or otherwise.

MR. HOLIAN: Just one other thing to add. We have one reviewer, Ganesh, from division of quantitative integrity. He is not the reviewer for this plant but he is aware about the status of the BWRVIP program approval.

MR. CHERUVENKI: This is Ganesh Cheruvenki. I work for NRR. BWRVIP 139 discusses in length about the repair criteria for steam driers. I believe it was -- the safety evaluation was issued last year. There are other reports -- BWR 189 I think, I'm not sure. It's not our division who is doing the review.

It's in the -- they are still reviewing it. It talks about the fatigue on the probable -- I mean, sorry -- the future repair criteria and the inspection criteria for the steam drier, and also it talks about replacement of the steam driers also.

MEMBER BLEY: I think the question had been --

MEMBER SHACK: Well it sounds like it's under review, is what the inspection guidelines -- otherwise it's done case by case I presume now.

MR. CHERUVENKI: The inspection guidelines were discussed already in 139, which the staff already approved.

DR. HISER: Yes, I think Ganesh, one of the questions was about reinspection in that area.

MR. CHERUVENKI: The reinspection criteria, I think it's in 189, DE is reviewing it. It does talk about the repair criteria plus reinspection and the frequency of reinspection also.

MEMBER ARMIJO: But you can't really tell anything about the rate of growth of a crack unless you know what the crack mechanism is, and you have got a crack component in there, if you are going to replace it, it would be good to know what is causing those problems.

MEMBER BLEY: Thank you. Anything else from the group? Well, we have lots of time. Nothing else.

At this point I would like to thank the applicant and thank staff for very good presentations and even more effective in time.

Thank you Mr. Chairman.

CHAIRMAN ABDEL-KHALIK: At this time our

schedule calls for us to reconvene at 3 o'clock to discuss draft final rule for risk-informed changes to LOCA technical requirements, 10 CFR 50.46a and we need to comply with the schedule so at this time, we will take a break until 3 p.m.

(Whereupon the above-entitled matter went off the record at 2:20 p.m. and resumed at 2:59 p.m.)

CHAIRMAN ABDEL-KHALIK: We are back in session. At this time we will go to item number 5 on the agenda, Draft Final Rule for Risk-Informed changes to LOCA technical requirements, 10 CFR 50.46a and Dr. Shack will lead us through that discussion.

MEMBER SHACK: Okay we are looking today at draft final 50.46a. We have reviewed other versions of this rule in the past as well as NUREGs on the frequency of LOCA and the effects of piping degradation and seismic loading on the selection of the transition break size.

Our last report on 50.46a called for revisions in the then-current version of the rule to strengthen the assurance of defense-in-depth for breaks beyond the transition break size and to restrict the changes that could be made without prior NRC review.

This version of the rule addresses those

issues as well as additional commission direction on the increases in risk associated with changes made under the rule, and we have even had a few changes added since the subcommittee meeting, and I'll call on Bill Ruland of NRR to open for the staff.

MR. RULAND: Thank you Mr. Chairman. Mr. Chairman, the 50.46a rulemaking has been a long and arduous path and we are getting to the very end now, so hopefully with this commission -- with this ARS meeting, we will -- the result of that meeting will have a -- we will get a final, acceptable letter, a recommendation from the ACRS as a result of this letter, as a result of our presentation today.

So I know we got some committee -- some questions from the subcommittee and hopefully we are prepared to give you sufficient answers in that regard. So with that brief introduction, Dick, could you start the presentation for the staff?

MR. DUDLEY: Okay, I am Richard Dudley. I am the rulemaking project manager for this rule. I would like to start off with an overview of the staff's presentation. I will give about five minutes of background on the history of this rulemaking and then I will do a brief summary of the overall 50.46a rule concept.

Following me, Rob Tregoning will speak on the effects of indirect seismic failures at the request of the subcommittee, followed by -- following Rob, Steve Dinsmore will talk about the 14-day outage time for equipment for mitigating breaks larger than the transition size, and following him Don Dube will talk about applying 50.46a to new reactor designs.

To start with the background, the commission directed the staff to begin this rulemaking with its staff requirements memorandum in March 2003. The staff kind of struggled with that guidance for about a year and we had to go back to the commission for additional guidance which was provided to us in July 2004.

With that clear guidance, we were able to go forward and publish a proposed rule on November 2005. Nearly all of the commenters on the initial proposed rule were industry commenters and nearly all of the industry commenters commented that the rule had excessive -- imposed excessive burden and because of that burden, that would prevent widespread implementation of the rule by licensees.

Because of these concerns and comments, we held two public meetings to discuss how we resolve the public comments, and to also discuss ways that we

could possibly reduce any unnecessary burden associated with the rule but ensure that it still provided for adequate protection to the public.

We finalized a draft final rule and then we met with the ACRS on that draft final rule in October and November of 2006. The ACRS gave us reviews in a November 16 letter and in that letter the ACRS said that the rule for risk-informed 50.46 should not be issued in its then current form.

The committee said that the rule provided insufficient defense-in-depth for pipe breaks larger than the transition break size. The committee was concerned about some issues associated with the risk-informed assessment process and they were also concerned that the rule did not require a review of the plant specific applicability of two reports that the NRC staff had done to establish the technical basis for the transition break size.

In response to the ACRS letter, and because of the significance of the ACRS comments and also because some of the ACRS recommendations appeared to conflict a little bit with direction and guidance that the commission had given the staff, the staff went back to the commission and requested additional guidance on how to proceed.

We got that guidance from the commission in August of 2007 and in that SRM the commission agreed with the ACRS that we should increase the overall defense-in-depth provided by this rule for breaks larger than the transition break size.

With that -- and the commission didn't really tell us how to do it. They said you can do what the ACRS recommended or you can do some other things. Whatever you see fit.

So with that guidance, we completed revisions and prepared another final rule and when our Office of General Counsel reviewed that rule, they determined that it had changed so substantially between the version that we published for public comment in 2005 compared to the current version, that it would be necessary to republish that rule for additional public comments before we could take it final.

So on May 2009, we came before the ACRS and we explained to them the changes that we had made in the supplemental proposed rule and we published the supplemental proposed rule in August of 2009.

The public comment period on that second proposed rule ended in January 2010. We evaluated the public comments and we prepared draft final rule

language. We made that draft final rule language public by posting it on the regulations.gov website and then we held a public meeting June 4, 2010.

We made some additional changes to the rule based on feedback from that public meeting and then we provided a draft final rule, the Federal Register Notice containing the rule language to the ACRS subcommittee on August 30, and we also made the rule language public around that time.

We held our subcommittee meeting on September 22 and the subcommittee raised three issues. Again the subcommittee was concerned about the -- that we didn't require an evaluation of seismically-induced indirect piping failures. We are going to speak to that very soon.

The subcommittee was concerned about the 14-day outage time for greater than TBS mitigation. Steve Dinsmore will talk about that and again, Don Dube will talk about one of the additional concerns the committee had, on the risk acceptance criteria for new reactors.

Moving forward, we have the full committee meeting today. After this meeting, we anticipate an ACRS letter in approximately two weeks. When we receive that letter, we will review the comments and

address them and make changes to the rules as necessary.

Then we hope to provide a final rule package to the EDO around the end of November, and then the EDO would then provide the final rule to the commission about mid-December. That is our current schedule.

Are there any questions on this history, background of this long and arduous process?

(No response.)

MR. DUDLEY: Okay, seeing none, I guess we will move forward to Rob Tregoning.

MEMBER BROWN: I have one.

MR. DUDLEY: Oh, I'm sorry.

MEMBER BROWN: Back in the very, very beginning, what was the driving force for going in this direction? I mean, the initial request, I mean I missed that when I was --

MR. DUDLEY: Well, I mean if you go way back to the original SECY paper on risk-informing our regulations --

MEMBER BROWN: This was, whatever, about eight years ago or whatever.

MR. DUDLEY: SECY 98300, I mean I think this risk-informing the ECCS requirements was thought

of, so as long as we -- as soon as the commission decided to risk-inform its regulations, I think the ECCS regulations were -- came immediately to mind because everybody thought there was a lot of margin in those regulations.

What we found as we went through the process is there wasn't quite as much margin as we thought and so it wasn't as easy of a process as we thought it might be but the office of research, ever since 1998, was doing studies on this and other things and they prepared a SECY paper in 2002 that I believe is the one that the commission made its decision on when it issued their SRM to us in 2003, to move forward with the rulemaking.

MEMBER BROWN: Okay, but aside from wanting to go to risk-informed, obviously there has got be some goodness falling out of like smaller equipment, less complex systems. Was that part of the initial thought process from the commission?

MR. DUDLEY: Yes, I mean, the concept is that if you reduce your emphasis on unlikely events and increase your emphasis on more likely events, you have the possibility of saving money and increasing safety. I mean that's the basic driving force behind risk-informing pretty much anything.

And so it was viewed that -- and it was confirmed that large breaks are much less likely than smaller breaks so the theory was that -- and what we did was we -- in the rule, we allow some reduced mitigation capability for the larger breaks which would allow licensees, if they chose, to have additional flexibility in their facility design and they could beef up the mitigation for the breaks that are more frequent.

And there is a result to have an overall increase in safety. There is a potential of an overall increase in safety under this rule.

But licensees aren't required to increase their mitigation for the smaller breaks so there is also the potential that licensees will do -- make design changes such as increasing power that would bring about slight increases in overall risk to the public.

MEMBER BROWN: Okay, so, since I'm an electrical guy I'm asking the question, please excuse me. I would think that it sounds -- I don't want to say it's a one size fits all but I would think areas of the country that are more seismically active than those that are less seismically active would have to have some differentiation between the level of your

concept of how likely is a large break LOCA to occur, or a large break pipe break to occur, rather than just small breaks. Is that --

MR. DUDLEY: I'm going to -- Rob, can you speak to that? I am not sure I want to really address that.

MEMBER BROWN: He can wait, I mean I just--

MR. DUDLEY: Do you want until you talk? Rob will be up next.

MEMBER BROWN: So that's fine. I'll wait instead of doing it twice.

MR. DUDLEY: Okay. Okay. Are there any other questions? Okay. Rob you would be next. Now it's official. You're like a yo-yo.

MR. TREGONING: Rob Tregoning from the staff office of research. Let me maybe address your question first of all that you just posed regarding to likelihood of pipe breaks for plants with higher seismicity.

That is certainly a possibility and that is something that the seismicity is something that is greatly considered in the analysis or the evaluation of the likelihood of pipe break and especially these large LOCAs.

However the thing that you have to

remember is that a lot of the plants that have increased seismicity also have a more robust and rigorous design basis with respect to their seismic loading vector so in many cases those plants might actually be safer than plants that have lower seismicity yet not as strong of a design basis and systems designed specifically to cope with seismic induced loading.

So you have to consider everything, not just the size of the earthquake, but the soil structural response, the response of the building, the response of the component itself, as well as, again, the design margins and factors associated with that specific plant to determine how likelihood the failure would be to a given seismic event at any plant.

MEMBER BROWN: Okay. All right.

MEMBER SHACK: But more directly to your question Charlie, one size doesn't fit all. You have to demonstrate, if you want to use this, that you fit within the envelope that they have defined. If you don't you may end up with a different pipe size.

MR. TREGONING: Right. Thank you for clarifying that Dr. Shack.

MEMBER SHACK: You have to demonstrate that in fact you qualify.

MEMBER STETKAR: We will probably get into that --

MEMBER SHACK: I think we'll get into that --

MEMBER STETKAR: discussion when you talk about indirect so --

MR. TREGONING: Well yes, we may in an ancillary -- I'm sure we will.

MEMBER BROWN: Okay how do you deal with -- one other point, question I guess, maybe to Richard I guess. You said that the idea here was to focus on those that are more likely and therefore have an increased safety posture, but yet, you then made a subsequent comment that because people don't have to do it, that then they uprate their plant, now they have an increased risk, so in that fallout of this, there's an increased risk as opposed to the more desired thought process that it was supposed to be a decreased risk.

MR. TREGONING: Do you want to address that Dick?

MR. DUDLEY: No, I'm sorry, I'm just getting this ready. Can you --

MEMBER BROWN: Because I am going to have to ask that -- do you really think I can repeat that?

(Laughter.)

MR. TREGONING: Yes I think your notion is -- and I am sorry Dick is trying to put his slide back up.

MEMBER BROWN: My understanding, based on your initial discussion, was the idea was to treat most likely pipe breaks and therefore improve our overall safety posture.

MR. DUDLEY: If we increased the mitigation for the more likely and made it more robust --

MEMBER BROWN: More likely breaks --

MR. DUDLEY: More robust if possible.

MEMBER BROWN: But then you said they don't have to do that, there's not an absolute necessity to do it therefore we could end up with power uprates etcetera, ending up with an increased risk of public exposure --

MR. DUDLEY: That's correct.

MEMBER BROWN: Now, that seems to be diametrically opposed to the end desire, but yet we seem to be ploughing ahead.

MR. DUDLEY: Well, that's why -- and you know actually, I still have half my presentation that I forgot to do --

MEMBER BROWN: Okay. All right. I'll just -

-

MR. DUDLEY: I got so excited that I called Rob up too early to answer your question but let me finish the rest of my talk and do the overview of the rule and I think maybe that will be a little clearer.

MEMBER STETKAR: Rich, just let me make an observation, just for the record, that any power uprate, regardless of a risk-informed 50.46a, will result in an increased release to the public, even under current licensing issues, by definition.

MR. TREGONING: Increased risk.

MEMBER STETKAR: Risk.

MR. TREGONING: Right. Risk.

MEMBER STETKAR: Meaning offsite dose.

MR. TREGONING: Right.

MEMBER BROWN: Well yes, but you are also supposed to evaluate mitigating circumstances before you go there. You look at whether the plant can handle it within its current licensing --

MEMBER STETKAR: That's true, as they would need to under this.

MEMBER BROWN: So still the posture is that you are going to meet the licensing basis and so the fundamental public safety remains no worse than it was before even though you might say there's an increased

risk. I'm not trying to parse words, it's just that there's a subtle difference between the two statements, at least in my mind.

MEMBER SHACK: I don't see that Dick uses the magic words in his slides, so let me just say, this is an enabling rule. We don't really know exactly what people are going to do with this rule, which is why the risk assessment process is built into it, that they have -- at very most they will end up with a very small increase in risk and there will be lots of things that drive them perhaps to take some increases in risk, a decreased risk in other ways.

But again the net thing can only be a very small increase in risk. But again, that doesn't actually prescribe any changes, I mean you can adopt this rule and until you start doing things, nothing changes and what you can actually do once you have adopted the rule is sort of constrained to give you these small risk changes.

MR. DUDLEY: If I could go ahead and briefly summarize the rule concept I think maybe this would make it clearer. 50.46a is an alternative to the existing ECCS requirements in section 50.46. It's voluntary. Licensees can choose whether to implement it or not. Under 50.46a, the LOCA break spectrum would

be divided into two regions based on break frequency. The transition break size is the dividing point and for the LOCAs in the first region, which are the higher frequency LOCAs, there are no changes to the ECCS requirements for the breaks in this region.

But in the second region, breaks larger than the TBS, the LOCA mitigation requirements are relaxed because these are lower frequency breaks.

So when you reanalyze your plant, your ECCS for these two regions, some plants will find that they have additional design flexibility after having done so, that would allow them to make a number of plant changes.

These are the sorts of plant changes that they could make that perhaps could increase the mitigation for small breaks or what else, but they are allowed to make changes enabled by the 50.46a ECCS requirements, but they are also required in the last bullet to make sure that all of those changes that are enabled are evaluated by a risk-informed assessment process to make sure that any changes in risk, especially increases, are acceptably small. So we have a risk screen included in this rule.

MEMBER ARMIJO: Richard.

MR. DUDLEY: Yes?

MEMBER ARMIJO: Bill brought up a point that I hadn't appreciated. If you have a -- let's say you are a PWR guy and you have to show that the transition break size -- you qualify for this rule and you could actually wind up, in the course of your analysis, winding up with a TBS that is larger than what's the current -- what, it's 17 inch or something like that.

MEMBER SHACK: Largest attached pipe.

MEMBER ARMIJO: Larger attached pipe.

MEMBER SHACK: To the Ps.

MEMBER ARMIJO: Yes, for the Ps. But does it go the other way? Let's say you're a BWR, which are really, the transition break such as a biggest pipe for all practical purposes in the plant, can they show by analysis that they could have a smaller transition break size? Or is it just one way?

MR. DUDLEY: I am not sure how they could show by analysis.

MEMBER ARMIJO: I don't know. I'm just asking is it possible or is that a given? It'll either be the transition break size or larger, no matter what? For either design?

MR. DUDLEY: We created the -- from the expert elicitation we got the curves of LOCA frequency

versus break size and we came in at 10 to the minus five frequency per year, was the baseline that we used to select the transition break size and there are different curves for BWRs and PWRs.

And we came up with a number for BWRs and then, though, we found out there really weren't any pipes of that size so we took the next largest pipe, and we made that the transition break size and we keyed it to the specific facility design because it made sense to us to break an actual pipe not a hypothetical pipe so that's why we did what we did, and I don't really see how you would come up with a specific --

MR. COLLINS: Excuse me, this is Tim Collins from the staff. The way the rule language reads right now, it's the largest attached pipe but I'm not sure if you don't -- if you can't qualify for that, I don't think you can qualify to use this rule at all. I don't think you can be larger or smaller.

The way the rule is now it doesn't allow for an increase.

MEMBER SHACK: Okay but you have to meet that.

MR. COLLINS: You have to meet that or the rule doesn't apply to you.

MEMBER SHACK: So it's largest attached pipe.

MR. COLLINS: Theoretically I guess you could come in for an exemption for larger transition break size.

MR. TREGONING: Or a smaller, theoretically.

MR. COLLINS: Theoretically.

MEMBER SHACK: But it would be an exemption.

MEMBER ARMIJO: But you would have to in case the -- let's say the BWR, you would have to challenge that expert elicitation and say that really --

MR. TREGONING: Well they would have to, if someone wanted to make that case, they would have to provide an appropriate technical basis --

MEMBER ARMIJO: Yes, that's what I mean.

MR. TREGONING: and report their plant-specific transition break size and that would be something that the staff would have to review and then ostensibly approve that as an exception to the rulemaking, I mean that's --

MR. DUDLEY: And that wouldn't be done under the rule. It would be done as an exemption from

the rules.

MEMBER ARMIJO: Yes.

MR. TREGONING: So it's no different than we would do any other exemption process.

MEMBER ARMIJO: Yes. The reason I'm bringing it up: it looks like, for the BWRs, the transition break size is so large that -- and then for the new plants, to have no recent piping, whether they are ABWRs or ESBWRs, you basically are going with the largest pipe, whether it's a feedwater line or a main steam line or a recirc line in every case.

So I just don't know how -- whether that was intention or it just turned out that way, that this won't really provide much usefulness for the BWRs.

MR. TREGONING: The new plants are in a little bit different situation because they have to come in and propose a TBS and then get that reviewed and approved by the office of new reactors so they are in a different situation especially because there's a recognition that the LOCA frequency curves, as well as the selection of the TBS, was based primarily on consideration of existing light water reactor plants that are out in the fleet now and there is certainly an understanding that new, especially passive type

plants that work differently and will have a different configuration and layout, that the basis and the selection for the TBS may not be applicable for those plants. So that is why that requirement is in there.

MEMBER ARMIJO: Okay well maybe I will --

MEMBER STETKAR: In principle there could be some because remember anything above the transition break size would be evaluated as a single ended break, so if you --

MEMBER ARMIJO: I think in the B it's the largest attached pipe.

MEMBER STETKAR: Well but it's still --

MR. TREGONING: No, it's not. No.

MEMBER STETKAR: It's not? Which one is it --

MR. TREGONING: It's the larger of the RHR or the feedwater.

MEMBER STETKAR: Or feedwater.

MR. TREGONING: So it's not the biggest.

(Simultaneous speaking.)

MR. TREGONING: The main recirc pipes are like 40 inches so we are talking about 20 inches or so. So it's a substantial reduction. It's just not as substantial as I think the BWR community would say be really useful for them at this point. At least those

are the indications that we've got so far.

MEMBER ARMIJO: All right. Thank you.

MR. DUDLEY: This next slide shows the ECCS analysis requirements for the two different regions. As I said before we are less than or equal to the TBC. There's no changes from the current requirements, but for breaks larger than the TBS, licensee would not need to assume a single failure. Licensees could take credit for offsite power and they could take credit for the use of non-safety equipment, if some source of onsite power is provided to that equipment. It need not be a safety-grade source. It need not be an automatically initiated, a manual connection would be fine.

And licensees can also choose to try to get to submit and have NRC to approve alternative metrics for determining coolable geometry, metrics other than what we currently use of 2,200 degrees Fahrenheit peak clouding temperature and 17 percent oxidation.

So that is another --

MEMBER SIEBER: Is this a rule change that actually changed the conservatism built into the calculation to the final acceptance criteria, like the decay heat curves and so forth?

MR. DUDLEY: No.

MEMBER SIEBER: No. Okay.

MR. DUDLEY: No. We require that both analysis below the TBS and above the TBS be done by approved analysis methods.

MEMBER SIEBER: Okay.

MR. DUDLEY: Initially, there was some thought that analysis methods above the TBS did not need to be reviewed and approved by the NRC but I believe the ACRS made a recommendation that we agreed with and now both models need to be approved models for both regions.

MEMBER BANERJEE: I have a question on this credit for off-site power for example, some of the other stuff that you -- if you get a large break, like a double ended guillotine break, it's likely to happen due to some pretty catastrophic event. Imagine some very large earthquake or something. Living in California, or when I lived in California, we worried about this a lot.

Now we used to say that Diablo Canyon would then trip due to loss of load. In other words obviously offsite power could be gone.

MR. DUDLEY: It would be expected.

MEMBER BANERJEE: Yes, would be expected.

In fact, what I am wondering is the only way perhaps -- not the only way, I'm sure there are other ways -- but one of the most important ways that you could get these very large breaks would be associated with events which probably will knock out quite a bit of stuff.

So how can you credit offsite power or make the single failure assumption for these very unlikely events, which are likely to be double ended guillotine breaks? I am having trouble with that.

MR. DUDLEY: Well, we credit it, but yet we require that an onsite power source be provided. That's an additional requirement that we have added.

MEMBER BANERJEE: I am saying why should that requirement be relaxed for that low probability event? We can say it's a low probability event. It may not happen or whatever, or very seldom, but why relax it at that point?

MR. DUDLEY: Well even if you have that accident, do you even know your diesels will work?

MEMBER BANERJEE: Probably --

MR. DUDLEY: I don't think you do.

MEMBER RAY: But wait. Hold on a second. We stand up -- in fact the NRC sent a group to Diablo Canyon just a month ago, who stood up and said if --

you are not going to get a loss of coolant if you have this big earthquake, but if you do, all these engineering safety features are going to work.

MR. DUDLEY: Right, that would be the --

MEMBER RAY: And you are not going to have to count on offsite power. Now that's a pretty big earthquake. That's 0.67 G up to zero period. So it's a big earthquake. Nevertheless we say your engineering safety features are going to work and you don't have to rely on offsite power. So to say something different than that, we ought to think very hard before we do.

MR. DUDLEY: Well I guess I don't think I am saying that. That's still the design basis earthquake for Diablo Canyon.

MEMBER RAY: Okay, but you are talking about relaxing things so that they can undertake a power uprate that wouldn't be possible presumably under design basis.

MR. DINSMORE: Yes this is Stephen Dinsmore from the PRA branch. I guess to give Dick a bit of time to think, this is the --

MEMBER RAY: Get the microphone across to you Steve.

MR. DINSMORE: Sorry. When they do the

changed risk analysis, which is what I would worry about, they would have to -- these assumptions don't carry over. These assumptions are when you do your deterministic analysis to demonstrate that you have the capability to mitigate this thing when you have a large break LOCA.

What you do with your risk analysis, you have to purely do the risk analysis, so if you have an earthquake that occurs, a strong earthquake that occurs, and you have to assume that well, that earthquake will take away offsite power, you have to do that. So your risk analysis will include those earthquakes.

MEMBER RAY: Yes, I know, the earthquake is an independent risk from the double ended guillotine break, at least as I have seen it done. It's not -- the two things are not cause and effect. I have had the benefit of really high quality explanation of why this is okay so I am not going to take people's time arguing with it here again. I will just tell you that I think we are making a mistake to say oh, we can update the power. We couldn't before. Now we can. And we can't satisfy the design criteria anymore for a design-basis earthquake because after all we have gone through this, what I call sophistry.

And so you know, I mean I realize that you can make it work and you can say this doesn't apply in this case at all, but the reality is that people aren't going to understand what we are saying. And --

MEMBER BANERJEE: It's hard to explain because sometimes --

MEMBER STETKAR: Harold, let me try this. Will Diablo Canyon survive a 1.5 G earthquake today? Yes or no? The answer is no. it will not.

MEMBER RAY: Well, you know more than I do.

MEMBER STETKAR: It will not.

MEMBER RAY: I know a good deal about it but you know more than I do.

MEMBER STETKAR: So the question is, does this change in reality, increase the risk from well beyond design-basis earthquakes compared to the current licensing framework? Is there any difference in the risk from any current operating plant solely based on this change for earthquakes that are well beyond the design-basis earthquake for licensing that facility? That's the answer I think --

MEMBER RAY: The problem is, John, that you have --

MEMBER STETKAR: we need to think about.

MEMBER RAY: Well I'm not sure you do, just

think about it, because every time you asked that question, you qualified it by saying it's a well beyond design-basis earthquake and that's what I mean by sophistry. You first place things beyond the design basis, and then you go through this exercise.

MEMBER STETKAR: Are you saying there is an immeasurable chance that a large piping system will survive the design-basis earthquake?

MEMBER RAY: No let me finish. Let me finish. What I am saying is that you can no longer say that for the design-basis earthquake, which people have been taught represents the maximum credible earthquake, those words have been used, I realize we are now a lot smarter and more sophisticated, but nevertheless if you say I can no longer meet the criteria that I licensed this plant for on the design basis, which as a result of some change I have made in the plant, not just because I do this arithmetic, I believe we are taking a step that we need to be very thoughtful about doing, because -- and that's all I am saying.

It isn't that I can't understand the mathematics, because like I say, I have got the best teacher here today explaining it to me --

MEMBER STETKAR: Oh, once again.

MEMBER RAY: But the fact of the matter is, I don't know that it matters if what you wind up doing is saying okay, now I can change the plant and people ask you, by the way, on that design-basis earthquake, with the loss of offsite power, can you still meet your acceptance criteria? And you say well no, of course not. But that's because I looked at a much bigger earthquake and concluded because of the low probability of that event that I can make this change.

Now look, let me say one other thing while I grab the floor. I was the one who had to take San Onofre from a half a G to two/thirds G. I understand that there is no way in the world you can accept a double ended guillotine break of reactor coolant pipe because I have looked at the analysis.

What you can expect, and we haven't talked about yet, is this indirect piping failure, indirect cause of a piping failure. Now whether that will result in a double ended guillotine break I think is a debatable point and we can discuss it.

But at this point in time, I am only saying that by making this change, we need to be I think very clear about how we change our message to the people who don't understand all this, because it is important and if you wind up no longer being able

to satisfy the requirements for the design-basis event, I think you may be doing something you will regret having done, because that is --

MEMBER BANERJEE: I have a slightly different view from --

MEMBER RAY: All right, I'm done.

MEMBER BANERJEE: All right. One is that there is uncertainties in all this so-called design-basis stuff. We know the Japanese earthquake, you may say they calculate design basis differently. It was larger than the design basis. The reason we have all this stuff is to take care of these uncertainties. That's exactly why --

MEMBER SHACK: Yes, but you take too much comfort in that design basis, double ended guillotine break because it is limited to a single failure.

MEMBER BANERJEE: You want more failures? I mean single is a good start. You want to get rid of that.

MEMBER SHACK: Let's put it this way. In any earthquake that's likely to cause a double ended guillotine break, I am going to fail lots of things.

MEMBER RAY: Well, that's the argument, I know Bill, that one would make but supposing you are wrong. Supposing to the design -- again, what have we

sold to the public? It's that we know what the biggest earthquake is. The pipe won't fail. But if it does, the engineered safety features will work.

Now that is what we have -- that's the position we have taken for all this long time.

MEMBER STETKAR: And if the design-basis earthquake -- I don't think this is any change.

MEMBER RAY: Well, if you uprate the power it will be.

MEMBER SHACK: If you now independently had a double ended guillotine break, you wouldn't have to assume the loss of -- again, in your case --

MEMBER STETKAR: Independently though.

MEMBER SHACK: having the design-basis earthquake and an independent double ended --

MEMBER STETKAR: It has to be independent. That's right.

MEMBER SHACK: is a pretty unlikely event.

MEMBER RAY: No, I'm not suggesting that it would be independent. I am just saying our position is that even if an earthquake does result in the guillotine break, we nevertheless have the engineered safety features that will mitigate it, and that will stay true until you uprate the power.

MEMBER SHACK: -- I don't agree with that

statement.

MEMBER RAY: What?

MEMBER SHACK: If the earthquake is what causes the double ended guillotine break, then I don't think you are going to -- you can't limit yourself to a single failure. If you look at the relative fragilities --

MEMBER RAY: No.

MEMBER SHACK: All sorts of things have failed.

MEMBER RAY: No, no, look, like I said, I had the ground unit at San Onofre and put in lots of supports okay, to get from point five to two-thirds. The supports are going to fail. Guaranteed. The question is what is the consequence?

MEMBER SHACK: Well, we are going to discuss the supports but I think John has the right answer. This is a discussion for us in the letter-writing period.

MEMBER RAY: Well, I'm not going to argue it anymore.

MEMBER SHACK: These gentlemen can proceed with their presentation.

MEMBER BANERJEE: The idea though, going back to my issue, was that you know these things let's

say, that some probability which is like the age of the universe or the age of the earth, 10 to the minus 9 years, so we know that this won't happen once in the age of the earth, is that the argument for taking this off?

MEMBER SHACK: No. Let's hold it to the letter-writing session. We may be here Saturday discussing this.

MEMBER RAY: Not with me.

CHAIRMAN ABDEL-KHALIK: Please continue Bob.

MR. DUDLEY: Okay so, all right then, it should be the next slide here. As I mentioned, as we did discuss, the transition break size for PWRs is the largest attached pipe to the main coolant loop piping. Typically that's the pressurized or surge line with an inside diameter of the order of 10 to 12 inches.

For BWRs it's the largest of the attached feedwater or residual heat removal line inside containment. That's generally around 22 to 24 inches but it is smaller than the really big pipe, which is about four feet in diameter in some cases.

MEMBER ARMIJO: Yes, in some of the existing BWRs.

MR. DUDLEY: So there is a reduction.

MEMBER ARMIJO: And it's not main steam line, I was confused.

MR. DUDLEY: When a plant initially wants to convert a section 50.46a it has to submit a license amendment to the NRC. As part of that amendment, the licensee would have to demonstrate applicability of the expert elicitation report. They would also have to demonstrate applicability of the staff's seismic study or provide a similar plant-specific study of their own and they would have to address both direct and indirect failures as Rob is going to tell you shortly.

The licensee would have to evaluate a leak detection capability at the plant. To ensure that it would have an enhanced capability consistent with what is described in the May 2008 revision to Reg Guide 1.45 on enhanced leak detection and leakage monitoring capabilities, and if the licensee wishes to have a self approval process by which they can make certain changes that have minimal impact on risk that are enabled by 50.46a but without the NRC having to review and approve the changes, that licensee would have to describe the risk-informed process that it proposes to use to the NRC and we would have to review and approve it before they would be allowed to use that self approval process.

For plant changes that are enabled by 50.46a, we expect that licensees will submit them in their initial application to implement 50.46a but they could submit them later if they chose to.

And for all enabled changes, the licensee would have to reanalyze the ECCS for each of the two regions using NRC-approved analysis methods. For any non-safety equipment that is credited in the analysis of breaks larger than the transition break size, that equipment would have to be listed in the technical specifications.

The reason for doing this -- it wouldn't have an LCO, it wouldn't have a surveillance requirement. It would be listed in tech specs and it's sort of an administrative requirement because we know that if it's in there in the tech specs, the licensee can't take it out without a license amendment. The commission told us they couldn't remove this equipment without NRC approval, so that's the primary reason for listing that equipment in the tech specs.

Licensees also, for this equipment, would have to provide as I said before onsite power to that equipment, even though they can assume they have offsite power, they still have to provide onsite power to that equipment.

This would be more of an accident mitigation capability than it would be an accident prevention idea.

MEMBER RAY: Just by the way, what do you mean when you say they have to provide both or am I misunderstanding what you are saying?

MR. DUDLEY: They would have to provide onsite power to -- if you put in some special pump, non-safety grade pump, that would allow you to meet the double ended guillotine break, that pump would have to -- could have a source of in-house power and of course it would have a source of offsite power but it would also have to have some sort of a way to connect it to some onsite generating equipment, not necessarily a diesel, a gasoline engine, just some sort of onsite, electrical generation equipment, so that in the event offsite power were lost, there would be a way to get that pump to function. It wouldn't function when you thought it should, and when it was calculated to in the --

MEMBER RAY: Well, that was going to be my question. How long do you have to connect this thing up?

MR. DUDLEY: Well, we were thinking on the order of half an hour. Again, it's an accident

mitigation measure.

And for all changes that are enabled by 50.46a, as I said before, the licensee has to do a risk-informed analysis and they have to show that the risk-informed acceptance criteria are met by those changes.

Now, the risk-informed acceptance criteria are shown here. For changes that are submitted to the NRC for our review and approval, the change in risk could not exceed a very small cumulative risk increase. Very small is considered an increase in core damage frequency of 10 to the minus 6 and an increase of -- or an increase in large early release frequency of less than 10 to the minus 7.

For self-approved changes these minimal risk changes that the licensee might be able to make without our approval. The risk criteria could not exceed -- an increase in risk could not be more than 10 to the minus 7 in CDF or 10 to the minus 8 in LERF.

Also for self-approved changes, the licensee would have to make sure that the change process and the rules requirements in 10 CFR 50.59 were also satisfied for those changes.

And for all changes enabled by 50.46a, the licensee would have to ensure that adequate defense-

in-depth was maintained, that adequate safety margins were maintained. The licensee would also have to implement a monitoring program to make sure that the PRA that they use to calculate these risk-informed -- to do this risk-informed analysis, that that PRA was consistent with the actual conditions in the plant and if conditions in the plant changed over time, the licensee would have to observe that and modify their PRA.

Then there's additional criterion for certified designs. The plant with certified designs would, in addition to meeting all the above criteria, would have to show that there was no significant decrease in the level of safety otherwise provided by certified design.

It is possible that in some designs that have very low risk, if you allowed a risk increase consistent with the criteria that we do for operating reactors, that might result in too much of a decrease in the level of safety provided by that design and so that criterion is in there and we might allow new reactors to make some design changes and use these risk-informed acceptance criteria, but we are going to talk to talk about that more later.

MEMBER STETKAR: Oh, you are? Right.

MR. DUDLEY: Later on. It will be a specific topic.

MEMBER STETKAR: Now, for the benefit of the members, that last bullet applies for -- it's a criterion that applies for both otherwise self-approved changes and obviously applies for ones that need to be submitted for review.

MR. DUDLEY: Yes. Yes.

MEMBER STETKAR: For any change you would need to satisfy that it is not a significant decrease in safety.

MR. DUDLEY: Yes, it would. All enabled changes would have that additional criterion tacked on to it.

MEMBER STETKAR: I just wanted to make sure I understood that. Thank you.

MEMBER BANERJEE: All the changes -- how would you maintain defense-in-depth? Is there some prescription? For example, you are no longer going to consider LOCA coincidence loss of offsite power, so how are you going to guarantee --

MEMBER SHACK: Breaks above the TBS.

MEMBER BANERJEE: Yes. So how will you guarantee defense-in-depth?

MR. DUDLEY: Well, it's the way we -- we

would use ways consistent with Reg Guide 1.174, which is for making risk-informed changes to existing plants and there are criteria specified in that reg guide for defense-in-depth safety margins and for monitoring programs, so the criteria we would use would be similar to those criteria.

MEMBER BANERJEE: So give me an example of what you would do for loss of offsite power.

MR. DUDLEY: I am going to ask maybe Steve Dinsmore to help me with that, our PRA expert.

MEMBER BANERJEE: Is this a PRA matter or is this --

MR. COLLINS: This is Tim Collins, for the loss of offsite power, we are requiring that the licensees be able to attach any non-safety grade equipment that they are crediting to an onsite power source, I mean, that's exactly why we have that requirement in there. It's really for severe accident management considerations. It's not for the demonstration of the ECCS performance capability, but it's there strictly as a defense-in-depth feature.

MEMBER BANERJEE: And it will allow you to operate ECCS and everything else?

MR. COLLINS: Any piece of equipment that they are claiming to take credit as an injection

source for a beyond-design-basis accident, that equipment will need to be able to be attached to an onsite power source as a defense-in-depth measure.

So you might not meet the mitigation capability in your analysis if you are non-safety grade -- if you have a loss of offsite power and you can't credit that immediately. But you may be able to save the core from a very severe accident if you can attach it to onsite power in maybe 30 minutes or so. It's really defense-in-depth.

MEMBER RAY: Okay but if what we are doing is mitigating beyond design-basis events, I think there is a lot of flexibility in how we go about doing that.

MR. COLLINS: We intend -- we hope to provide flexibility in doing that.

MEMBER RAY: Right.

MR. COLLINS: Yes.

MEMBER RAY: But if the result of our doing that is that we can no longer meet the design-basis events --

MR. COLLINS: We need to be careful here. We are redefining the design-basis event here. That's what this rule does.

MEMBER RAY: Let me change what I said

then. If you can no longer meet the former design-basis event, okay?

MR. COLLINS: Well, that's what the risk analysis is supposed to provide the protection for. It is supposed to make sure that when we relax the requirements for what were previously design-basis events to beyond design-basis events, that there is not a significant in risk. As a matter of fact the commission direction is that it be very small change in --

MEMBER RAY: No, I do understand that. I really appreciate it. I want to make sure you appreciate that my concern is that people understand what we are doing and I think it's -- I call it sophistry but it's obscure at the very best, what we are doing, because as you just said, we are changing the design-basis event.

MR. COLLINS: You know I don't think that's obscure, I mean, we tried to make that as clear as we can in the --

MEMBER RAY: Okay. All right.

MR. COLLINS: considerations that we are redefining the limiting design-basis LOCA. We have said that in no uncertain terms, taken it into consideration.

MEMBER RAY: All right.

MR. DUDLEY: My last slide is on operation requirements. Once the licensee is approved to implement 50.46a, all future plant changes that that licensee makes, whether enabled by 50.46a or not, must be reviewed to make sure that they don't invalidate the applicability review that he did in his initial application of the two generic studies that formed the technical basis for the TBS, the expert elicitation, and the seismic study.

The licensee must maintain sufficiently sensitive leak detection equipment for all piping larger than the TBS as long as they are under 50.46a, and there is an operational restriction also under 50.46a.

If a licensee finds itself due to failure of some equipment or something, to be operating in a condition where they cannot show that they can mitigate the double-ended break, and meet the acceptance criteria, they would be allowed to operate in that condition only for a short period of time.

And we define in the rule short period of time as being no more than 14 days and in a 12-month period or some alternative period reviewed and approved by the NRC.

Also, the licensee would have to ensure that the PRA that they used to perform their risk analysis and their risk-informed reviews is of sufficient scope and quality and keep it up to date.

They would have to periodically update and maintain the PRA once every -- no less often than once every four years and they would have to periodically confirm when they updated their PRA that the cumulative risk increase that they had accumulated under this rule did not exceed very small, and it's possible an error in the PRA is found or something that would cause that number to exceed the very small criterion.

The licensee would then have to go and change something in their facility to reduce risk, either undo the change they made -- more likely they would implement some offsetting change to otherwise reduce the overall risk at the plant.

CHAIRMAN ABDEL-KHALIK: Now, this first bullet, reviewing all future plant changes, I mean some of this stuff can be just sort of by inspection. Somebody is going to replace a motor on a service water pump and say well, gee, this doesn't have anything to it, and so that's sort of an acceptable review from your perspective? Somebody would look at a

change and say --

MR. DUDLEY: Absolutely.

CHAIRMAN ABDEL-KHALIK: this has nothing to do with it.

MR. DUDLEY: But I think all plants have a facility change process and there would have to be an additional step added into that process. Most of the changes could be screened out early on without really any detailed evaluation, but unless you require all changes to be evaluated, there is really no way to know. You could change -- redesign a parking lot and maybe change the seismic response of a plant, I mean, I don't know.

So you have to say all changes and they may not have anything to do with the nuclear island.

MR. TREGONING: That's an artefact or a direct result of because this is an enabling rule, we have this requirement in there, because it's not like we are designing a rule for specific changes. There's lots of broad changes that could be made.

For many plant changes that would be made, I would agree with you, this will be not applicable. So I think it is something that the licensees need to build into their change process just to make sure that they have checked that box and considered it as part

of their -- what they would normally go through when they evaluate the effect of plant changes.

MR. DUDLEY: So this would complete the overview of the rule concept. Other questions that anyone has?

MR. TREGONING: At the risk of trying to get us back a little bit on schedule, I will dive into this first topic on seismically induced indirect piping failures and how those are treated in 10 CFR 50.46a as well as the draft reg guide that covers how a plant, DG-1216, how a licensee would demonstrate the transition break size is applicable to their plants.

I am going to try to go pretty quickly through this. I wanted to provide a little bit of background just to make sure all the committee members were up to speed on what the issue is. So I'm going to talk a little bit about the original technical basis and the work that was done associated with the treatment of these types of failures. I want to talk about the existing requirements and guidance, and when I say existing here, these are the requirements and guidance that were published in the rule that went out for public comment as well as the draft guide which is out for public comment now.

So these are the requirements and guidance

that are in the rule that has been put out for public consideration now. I want to touch briefly on the feedback that we got from a very rousing debate at the ACRS subcommittee meeting about two weeks ago and finally, probably the crux of the presentation is how we respond to that feedback and how we propose to move forward. So it is that last slide is most important so I will try to get through as much of it as quickly as I can. Next slide.

So what are these things called indirect piping failures? Well, this first bullet is really meant to define them, define what we mean, what we are talking about. So this is a failure of a structure support component commonly referred to as SSCs, due to a seismic event, and the failure of this ancillary component subsequently causes the failure of RCS pipe so a primary pressure boundary pipe or a primary pressure boundary piping component.

So I have just listed some examples of things that can happen. It could be support failures -- that's something that we have already talked about -- it could be in-line components, valves, that become accessibly deformed due to the event. You could have failure of the components itself or their supports that are acting as anchor points for the piping

system.

And you could also have a failure of a non-attached SSC of the piping system which either falls over or injects missiles or something that impacts the RCS piping.

So there's a number of different failure modes that could potentially cause indirect piping failures. The next point I wanted to stress here is the only thing we are considered about with indirect failures are those reactor coolant system failures that are greater than the TBS, because that's the only area that we are changing the design basis in.

So for pipe breaks smaller than the TBS, all the original design-basis considerations require or apply. They still are -- will be contained and governed by 10 CFR 50.46 requirements.

So the issue here is that we want to ensure that these indirectly-induced failures don't invalidate the technical basis that supported the transit in break size. Next slide please.

So what did we do? There's been quite a bit of study historically on indirect pipe failures. You go back to the `80s, there was very extensive studies done by Lawrence Livermore laboratory when four NUREGs published, one NUREG with each major plant

type, Westinghouse, CE, P&W and then the GE BWR fleet, looking at not just indirect piping failures but more broadly effects of seismic events and I just wanted these first bullets really provide the recommendations and findings within these reports, or within the summary reports related to indirect piping failures.

And the first one is that the most likely cause of these failures is an induced component support failure which --

MEMBER RAY: Which I agree with absolutely.

MR. TREGONING: Sure. So, I don't think there's a lot of contention there.

MEMBER RAY: Ninety-nine percent of vulnerability in any plant.

MR. TREGONING: Right. So that was the statement that was made at this point 25 years ago, an insight that was gained. And then the other recommendation that they had was that the strength of these supports currently designed for a combination of the safe shutdown earthquake and the large break LOCA load should not be reduced, so I think there was similar sentiment at the time that we needed to retain the original design basis associated with these supports.

Then when we did the seismic study

supporting the development of the transition break size for 50.46a which is summarized in NUREG-1903, which certainly looked at the Lawrence Livermore study and not only did we review that study, but we looked at all the work that had been done in the ensuing 20 years at the time and a lot of that work was contained in the seismic PRAs the plants developed, the seismic safety margin research program and the n the IPEEE submittals.

And by and large this NUREG-1903 review really confirmed those original recommendations. If you look at the first bullet, and I think Bill touched on this a little bit already, the valves, non-degraded piping and the pipe supports in general have sufficiently or significantly higher capacity or use the word fragility if you would like than other RCS components.

When we talk about other RCS components and especially component supports, they are more vulnerable than the piping and the piping supports and based on this other view, NUREG-1903 also came to the conclusion that most of the significant NSSS failure modes related to indirect piping failures would be attributable or expected to be attributable to the failures of major components or their supports.

So it is really a reaffirmation of that original recommendation in the Lawrence Livermore study. Next slide please.

MEMBER STETKAR: Rob.

MR. TREGONING: Yes.

MEMBER STETKAR: This should be quick. Do you have a feel for the number -- you said NUREG-1903 looked at the earlier Livermore stuff, and also seismic PRAs and IPEEE submittals. Do you have any feel for the actual number of seismic PRAs, pipe-specific seismic PRAs as opposed to margins analyses and granted the margins analyses will not identify these types of vulnerabilities.

MR. TREGONING: Well, but they will identify the significant risk contributors, potentially.

MEMBER STETKAR: In some sense.

MR. TREGONING: Yes, I mean, not in a quantitative sense.

MEMBER STETKAR: But I was more in terms of real, integrated type risk assessments, looking at seismic, are we talking about 20 percent of the industry or 70 percent of the industry?

MR. TREGONING: You know, it's not -- unfortunately that's not my area of expertise. I don't

know. Maybe Steve would want to chime in.

MR. DINSMORE: Yes, this is Steve Dinsmore for the PRA branch. I'm pretty sure it's not 70 percent.

MR. TREGONING: No.

MR. DINSMORE: I doubt it's 20 percent. Seismic margins was very popular.

MR. TREGONING: Yes.

MR. DINSMORE: For a variety of reasons obviously.

MR. TREGONING: Obviously.

MR. DINSMORE: I would say 20 percent or less as well. I would concur with that. But I don't have hard numbers that I can quote.

MR. TREGONING: Thanks. Okay. Now we can go on to the next one.

Okay. So what did we do -- what have we done since the original Lawrence Livermore study? Well, essentially, NUREG-1903 and then also some work done by EPRI, essentially retained the original approach that was used in that evaluation but they updated that approach basically to account for increased levels of understanding of seismicity and seismic hazard and then also plant response spectra.

So it wasn't based on typically more

recent understanding of component fragilities, but a really more recent understanding of the forcing function or the loading that would be applied to those fragilities as a result of these seismic events.

So as I mentioned, there were two studies, NUREG-1903 and EPRI, and NUREG-1903 looked specifically at large-component failures, again, since that was expected to be or is expected to be the major risk driver. They looked at two cases, a Westinghouse rock site. Why the Westinghouse rock site? This was one of the sites and designs in the original Lawrence Livermore study that was one of the bounding cases, so they looked at what at the time was the bounding case.

And they also looked at a CE soil site. They used at the time what was the latest seismic hazard curve information that we had publicly available which is summarized in NUREG-1488, which came out in 1994.

So even -- and there was an understanding of the time of 1903 that those hazard curves, while they were the best we had available, that they were dated as well.

And the results that we got for both those cases were the mean piping failure probably or the likelihood of a large pipe failing due to one of these

events was about 10 to the minus 6 per year.

EPRI, subsequent to 1903, but not that much later, looked at three cases. They looked at a similar Westinghouse rock site, CE rock site and then a GE soil site.

Now they used more recently updated seismic hazard curves that had been developed for early site permitting purposes and their results varied for those three plants, mean failure probabilities from 6 times 10 to the minus 6 per year, down to 10 to the minus 8 per year, and of course I wanted to focus on that upper number because at the subcommittee meeting there was a lot of discussion of the fact that well, that number is really close or close enough to the 10 to the minus 5th metric that was associated or that is associated with the selection of the TBS, that that causes concern due to the fact that these indirect failures may be an unacceptable percentage of the risk associated with just the TBS due to material degradation under normal operation.

MEMBER STETKAR: Rob.

MR. TREGONING: Yes.

MEMBER STETKAR: Before you leave that, the second bullet under EPRI there, says they used updated

seismic hazard curves. You kind of qualified that a little bit. I don't know the date of this study so did they use the latest -- any input from the latest 2008 USGS --

MR. TREGONING: That is around 2003 - 2004 and that is why I qualified this.

MEMBER STETKAR: Okay and recognizing the 2008 hazards --

MR. TREGONING: These things are still evolving.

MEMBER STETKAR: That's right.

MR. TREGONING: And there was a recognition of that during 1903 and there's a recognition of that when evaluating the EPRI studies as well. So yes. As part of generic issue 199 there is certainly an understanding and a consideration of the fact that yes, these will continue to evolve, hopefully over the nearer term than the longer term.

So, what did we have or what is existing right now in what is out for public comment both in the rule and in the draft guide?

So the rule itself, as published in last year, as Dick talked about, there were no requirements for plants to demonstrate that the frequency of their indirect failures greater than TBS was acceptable. So

there's nothing in the rule about this.

What is in the rule is it says there's no generic changes allowed to essentially the seismic design basis. So they weren't allowed to, in that Lawrence Livermore study, essentially erode the original design basis by making changes under 50.46a.

And if they wanted to do something like that, there was a requirement, an existing rule that they would have to come in, justify why such a change was acceptable and then subject that to staff review and approval.

Within the draft guide itself, as we discussed extensively in the subcommittee meeting, currently contains no guidance for a licensee to demonstrate acceptable and direct failure frequencies.

Why did -- we had a lot of discussions at the subcommittee -- how did we arrive and what was the basis for that?

Well, we certainly had no basis, based on this limited study, to allow any sort of generic changes in the rule, for any of these components anchors and supports and things like that.

So that was never a consideration, that we would allow any sort of generic changes. And really the basis was why we didn't require plant-specific

applicability is that the frequency of failures -- there was an understanding with the staff that the failure frequency would still remain less than the TBS frequency, because the original design basis was retained.

Now we had a lot of discussion about, during the subcommittee meeting, well yes, that point is true, because you are allowing relaxation of your mitigation of events between the TBS and the original design basis. Even though the frequency of the event hasn't changed itself, the risk associated with that event may increase because of the relaxation that you have got in the rule. Next slide.

So I have summarized a little bit the ACRS feedback that we got: the concerns at the subcommittee that the relaxation of these mitigation requirements for breaks beyond the TBS could result in unacceptable risk due to these indirect failures, even if those frequencies don't change, and the concerns I think I have adequately summarized your concerns that the possibility -- that indirect seismic failures may be equal to or greater than direct seismic failure frequencies and again, the concern that the limited studies that we do have show that the highest frequency estimates for these approaches to frequency

used to select the TBS as well as the recommendation that these seismic hazards may continue to go up in the future.

MEMBER RAY: Rob, let me interrupt you and say I -- you did well in capturing what we said. I would say though trying to determine what is the possibility of indirect seismic failure, or what should be the assumed frequency, as I think you said, and if not I will certainly say, is a daunting task because the fragility of the supporting structures and seismic snubbers and everything you can think of that support a reactor-coolant pressure boundary, is really, really hard to determine and I would almost say is a bridge too far. But that's all I want to say.

And I keep referring back to the fact that I had to do that once and it was really tough.

MR. TREGONING: Yes. No. And that's -- as a pragmatist, I have that concern as well. We have had a lot of discussion about this since the ACRS meeting internally, not surprisingly, and there's a lot of views internally on the staff on this issue. Some people think we can update the existing estimates in a way that may be less complex and convoluted than at first blush might seem to be the case.

Now, having said that, I think we are

really at the point here, given the -- you will see here as we proposed to move forward -- we still need to have quite substantial internal discussion and debate about how we are going to move forward with this.

MEMBER RAY: I just want to acknowledge that that is really a tough job.

MR. TREGONING: But I mean in principle, that's -- potentially it could be. We are hoping that we can arrive at guidance and an evaluation method that might make this thing tenable but that remains to be seen at this point.

MEMBER RAY: Okay. All right. Fine.

MEMBER STETKAR: That's the purview of DG-1216.

MR. TREGONING: Yes and I want to thank the committee for adding this to my list of things to do associated with DG-1216.

So this last point, --

MEMBER SHACK: It's long-term employment. You know, in the current environment, that's not a bad thing.

MR. TREGONING: Either that or an impetus for looking for a career change, I'm not sure which it's going to be but we'll see.

So really the nexus of the arguments for this last point, is I think the ACRS subcommittee recommendation that the licensee should have to demonstrate the frequencies of these associated risks is acceptable, and that by doing so, make it consistent with the treatment of direct failures that are seismically induced and ensure that these indirect failures aren't a significant risk contributor that would undermine or erode the basis for the selection of TBS.

So then I appreciate you sitting patiently through to the punch-line slide, which is last slide. We essentially capitulate and we agree with the ACRS recommendations that indirect failure should be demonstrated to be insignificant risk contributors.

MEMBER CORRADINI: See the light, not capitulate.

MR. TREGONING: It's a matter of interpretation.

MEMBER RAY: If you can come up with a simple way to do it I mean I will be very happy to support it.

MR. TREGONING: Well, you will, I'm sure you will get an opportunity to review and comment on the method that we propose to conduct this evaluation

so --

MEMBER STETKAR: I suspect the P&P committee will recommend we look at that reg guide.

MR. TREGONING: So I suspect that this will be a topic that we have many future and fruitful discussions on so, and we talked about the reasons for this, well, certainly the updated seismic hazard information is one reason, but another reason that is maybe a little bit more obscure is we got direction between the draft rule and the final rule that the reliable risk changes went from small to very small, and when you make an order of magnitude decrease in risk, it really requires you to go back and say, okay these -- it puts a higher bar on your initiating front frequencies because if you mean that a larger event frequency has a substantially bigger impact on the relative magnitude of the risk, and that was something -- we talk about the tentacles associated with 50.46 and these changes that we made. I would say that is something that personally and maybe others within the staff did not fully appreciate until we sat down and really thought about some more and said we know you're right.

This one change itself had some ramifications that we needed to go back and revise and

reconsider. So it has only been a couple of weeks, but how have we moved forward or plan to move forward?

Well, we have already done some modified language to the FRN and the rule language for the draft final rule. Relatively straightforward and simple, essentially saying yay, verily, you have to do this sort of analysis to make this demonstration.

And the plan is to add guidance in 1216 to provide a method for this and that will be the challenge. But we actually had a public meeting a week ago on this and unveiled at least and had some initial brainstorming discussions about ways that we might go about achieving this and I thin the notion is we want to get -- or at least the plan is that we are going to update 1216 as part of the public comment period to -- and part of the public comments that we receive, to add some proposed evaluation methods and use a pilot plant study to evaluate not just the acceptability of this guidance, but also the implementation costs and the flexibility associated with the guidance.

So that really leads to my last bullet, is I am requesting and I think the staff is requesting that the ACRS in their letter that they write on 50.46a to the commission, document these recommendations so that it provides the staff with

sort of a record to treat this as really an additional public comment related to DG-1216.

So really this request, I presumed that you would document these recommendations anyway, but by doing so, it will provide us a mechanism with referencing a rationale and a reason for moving forward with these proposed changes.

So that was all that I had.

MEMBER RAY: Good job.

MEMBER ARMIJO: Rob, in the public meeting that you had on these recent things, what was the feedback from industry?

MR. TREGONING: Well, I think it's too early to tell because to be honest they were hit cold by them because it is not something that originally was a planned discussion point at the public meeting. I don't know how many of them had been purview to the ACRS subcommittee discussions at that time. It was only a week prior.

MEMBER ARMIJO: There was nobody from --

MEMBER STETKAR: It wasn't a well-attended subcommittee meeting.

MR. TREGONING: Right so needless to say it was something that, when we had the public meeting, I at least wanted to -- the purpose of the public

meeting was just to put out there into the public forum so that we could start generating ideas and discussion and debate.

So I think it would be a little bit unfair to ask the industry at this point about any initial recommendations. I think it is something that they will certainly need to consider very strongly and I am a little bit -- the only thing I want to talk about with that public meeting, we are proposing a pilot plant study for the entire reg guide and there is a lot of uncertainty in the industry now about the implementation costs associated with the rule.

Well one of the implementation costs will be how much it costs to demonstrate the applicability so we want to use the pilot study to get a feeling for what not only the implementation costs are, but there may be some ways to simplify the evaluation and analysis as we work through this, we can recognize and identify.

Because this is an enabling rule, this acceptability document has to also cover a lot of potential changes that really aren't envisioned. So if you look at the reg guide, it's forced it to be very broad, and in some ways, potentially very complex, so we think it's really necessary to do this pilot plant

study to really see if the whole thing holds together, if the plant actually had to walk through one of these analyses, and are there ways that we can increase and gain efficiencies that we can build back into the reg guide to simplify things somewhat?

MEMBER ARMIJO: Is your thinking that in the pilot study you would address a number of changes that would be ranging from moderate benefit to large benefit to the licensees? I mean, what's in it for them?

MR. TREGONING: Sure, I mean, you know, we would like to -- I don't want to go -- at risk of delving too much into this, the notion is 1216 now allows you a lot of options so we would like to look at a lot of options or implementation as far as pilot study. Right? There's easy options. What are the costs associated with that?

What are the costs associated if you can't do one of the easy options and you have to actually do a full seismic analysis of your plant, right? What are those costs?

And I think if you do that, that will give plants an understanding of okay, this is the level of benefit that I have to get from my proposed plant change to make these implementation costs worthwhile

and I think at the end of the day that's the sort of information that the plants are going to need to know how thoroughly they may adopt this, and I think this will play into the final success or not of this rule. I mean if you have a voluntary rule and no one adopts it for anything, then you argue well, were you successful? Probably not. You spent a lot of time and money developing something that no one has found useful.

So the pilot plant study, I believe, is going to be very important towards giving plants the information that they need to know whether they can move forward with -- or what types of changes they need to move forward with for 50.46a.

MR. DUDLEY: Okay. Next, Steve Dinsmore will talk about the 14-day out of service time.

MEMBER SHACK: You are not Steve Dinsmore.

MR. DINSMORE: Okay my name is Stephen Dinsmore. I am a senior reliability and risk analyst in the PRA licensing branch in the division of risk assessment in the NRR and I am going to briefly talk about this allowable out of service time for equipment credit and large break LOCA analysis.

But first I would like to define that with an example so we all know what we are talking about.

As you saw earlier, they don't -- cracks above the TBS, they don't need to assess a single failure criteria, so if we have a plant that has raised its power level such that for breaks above the TBS it needs flow from both LPSIs, it would be permittable under the rule.

MEMBER BROWN: Say that again.

MR. DINSMORE: If we have a plant that raises power level to such an extent that it needed the flow from both LPSIs to meet the acceptance criteria --

MEMBER BROWN: LPSIs.

MR. DINSMORE: Low Pressure Safety Injection.

MEMBER BROWN: All right. Got it. Go ahead.

MR. DINSMORE: From the low-pressure pumps. So they all have two LPSIs, and now they need them both.

MEMBER BROWN: They're allowed to credit both.

MR. DINSMORE: They're allowed to credit both. And the question comes along, well what happens if one of these has failed or if they take it out for maintenance? And we called that operation in unanalyzed condition because they couldn't demonstrate

that they could meet their success criteria.

So all of this time -- and then the question was, well, what do we do about that because obviously if stuff fails, they could get in that situation, plus they like to do their maintenance online and that is better for risk as swell.

And so -- that's the situation we are talking about. What I am going to do is I am going to first go through a background of where the requirement came from, and then general description of the requirement and then where the number came from, the 14 days, which was popular. And then I am going to talk a little bit about difficulties that will be encountered if we have to calculate a number instead of using the 14 days.

MEMBER CORRADINI: So you are anticipating questions, I see.

MR. DINSMORE: Yes. I hope not quite as many as the seismic folks but okay, this rule, the overview of the requirement's history. No, you went too far, go back. Okay the commission direction indicated that the rules should include requirements for licensees to maintain capability to mitigate the full spectrum of LOCAs.

They also said the capabilities for beyond

deisgn-basis events, which was the above TBS, should be controlled with NRC requirements commensurate with the say significance of these capabilities.

In the initial published rule, we simply said no operation in an unanalyzed condition, and of course there was a lot of comments on that for a variety of reasons and it proved to be very undesirable and it was probably also unworkable.

And it was also not really necessary because it is not really commensurate with the safety significance because these LOCAs are relatively infrequent.

So what did we do? We got all these comments. Now you can go to the next slide. And we started to look around. We said no time was not appropriate, that no time in this situation was not appropriate, what kind of guidance exists that tells us how much time would be appropriate?

There wasn't a lot. The current tech specs in the risk-informed operational control, such as the maintenance rule and the tech spec initiatives deal with degraded functions not loss of function.

In this case we really have a loss of low pressure injection function whereas all the tech specs assume you have -- the function is still there but you

have lost one of extra trains.

Now there is a tech spec initiative called six. It does deal with loss of function but it differs substantially from the current controls and it has not yet been fully implemented. There's a topical, a WCAP topical that was approved recently but I don't think anybody has actually used the -- it differs somewhat in that it starts with the time that the people need and it will do a risk-informed check to make sure that that is not excessively risky and then it will decide yes or no instead of taking an acceptable change in risk and backing out an acceptable time.

That's one difference. Another difference is tech initiative 6 doesn't cover ECCS systems. It's mostly ventilation systems and another difference is there's no voluntary entry into this condition. This is just if you happened to find something fail.

So tech spec initiative does kind of deal with this stuff but again, it hasn't all worked its way out so we are still working on this methodology.

But we did modify the rule to add flexibility and to reflect the near-term risk-informed method advances that we are working on.

So the current proposed rule provides a

fixed time, which is this 14 days, which provides a fully vetted acceptable alternative or an alternative proposed by the licensee and approved by the staff to provide flexibility.

What I mean by fully vetted is there's no real guidance that you can take and derive this 14 days from. So the 14 days is kind of a decision. And when you do something like that here, it's better to do that in a public hearing for comment, you can come to the ACRS, you get ACRS comments, so there's a whole long process and in the end you can kind of accept that that's a good idea which might not be -- that would be the idea anyway so then with that, I will go to where we did get the 14 days.

There's a couple of things around. There's a reg guide 1.177 which is plant-specific approach for -- risk-informed decision tech specs. There's an acceptance guideline in there that the integral condition core damage probability has got to be less than five times 10 to the minus 7 in the large early release frequency less than five times 10 to the minus 8.

Now these LOCAs, these are big LOCAs and so these are PWRs mostly so they get low pressure core damages, low pressure core damage doesn't do a lot of

stress on the containment so we can deal just with the CDF really because the condition containment probability is probably less than .1.

If you use a LOCA frequency of 10 to the minus 5 per year, with no mitigation, you could back out and allow AOT at 18 days. It just gives you a number. It gives you an idea of what might be acceptable.

Now of course these are not loss of function. These are degrade function, but -- SRP chapter 2.2.1 and 2.2.2 -- this is badly written, I'm sorry -- identifies external events that need to be design basis and then the next little sub-bullet, therefore external events with a frequency of less tan 10 to the minus 7 per year need not be design basis.

So if it is bigger than 10 to the minus 7, it should be in your design basis, and should be mitigated. If the frequency is less than 10 to the minus 7 it need not be in there and need not be mitigated.

So here we have some number for what need not be mitigated. And we can make the same assumptions above. This gets to an allowed outage of time of about four days.

So, then we had a lot of discussion with

industry. We had as the number the four days and the 18 days and a fairly long AOT, this is not uncommon in industry, is 14 days.

And they kind of said well that would be normally sufficient. If you get one that is too short, it's useless. And if you get one that's too long, it's not a good idea.

So the net result of all of these discussions is we put 14 days in the rule instead of this.

MEMBER SHACK: Of course this is cumulative so if you burn 14 days on one outage -- you have got a problem.

MR. DINSMORE: Yes.

MEMBER SIEBER: Well, that's where you are right now.

MR. DINSMORE: But you also have this opportunity to come in and argue that here's an alternative, so you wouldn't have to immediately request an exemption from the rule. You could come in and request an alternative that is actually for your plant this year more than 14 days. So there is a fair amount of flexibility in there.

MEMBER STETKAR: You could also do that if it was four days though, right?

MR. DINSMORE: Yes but you would probably do it a lot more often.

Then the next slide, I just want to go through quickly. If you need to calculate this, if you didn't put 14 days in the rule and you just said come in and tell us what you are going to use, it is a lot more complicated than it initially appears.

If we look at the top line here, this is what got Mr. Stetkar's attention, if you assume a LOCA frequency of 10 to the minus 5 per year and that leads to core damage and you use your full 14 days, that's 3.8 times 10 to the minus 7 per year, an increase in risk of that per year.

For operating reactors that is very acceptable. That's below our event horizon. For new reactors I guess, well, we'll talk about that later.

MEMBER STETKAR: However just noting, though, that that is between the minimal and very small.

MEMBER SHACK: You have used up 40 percent of your very small change in a sense.

MEMBER STETKAR: This is not a minimal increase in risk in the sense of the term minimal as it is applied.

MR. DINSMORE: Yes except it's not a

permanent change.

MEMBER STETKAR: It's not a permanent --

MEMBER SHACK: We still agree it's between four and 18 days.

MR. DINSMORE: So maybe below the event horizon was the wrong phrase, but --

CHAIRMAN ABDEL-KHALIK: The fact that this is cumulative, does it apply to all components that would be required to mitigate an event beyond TBS so you just keep adding in regardless of which component is affected in a calendar year?

MEMBER RAY: I think it's a running --

MR. DUDLEY: If it were a single train system.

(Simultaneous speaking.)

MR. DUDLEY: -- component and if any one component -- if it were single train system, and any one component were out, it would not be operable, right?

MR. DINSMORE: It's only when they are needed. If you have two LPSIs and you have no backups, you take out one LPSI, it starts to count. If you have two LPSIs and a backup somehow, you took out your one LPSI, you had a backup, you wouldn't go into this cycle.

CHAIRMAN ABDEL-KHALIK: But let's say I also have an alternate power source, a diesel, a non-safety diesel that I would need to mitigate this event, in addition to one of the LPSI pumps, then I would have to keep track of all components that I would consider to be needed to mitigate the consequences of the event and all of those unavailabilities and all that combination has to add up to less than 14 days?

MR. DINSMORE: Yes. I believe.

CHAIRMAN ABDEL-KHALIK: And if they are simultaneously out, then I don't count them twice.

MR. DINSMORE: No.

MEMBER STETKAR: That's outage management. No, it is. Honestly.

MR. DUDLEY: You would probably take something out if something went out and do some maintenance if you needed it.

MEMBER ARMIJO: Take advantage of that time. So two LPSIs, you had a problem with one, you had to work on out for 14 days, that's the end of the game and if you have a problem with the other one --

MEMBER STETKAR: Then you would have to come in --

MEMBER ARMIJO: You would have to reduce

power or --

MEMBER STETKAR: Or come in and justify on a risk basis that we are still okay.

MEMBER SIEBER: Are you allowed to count a non-Q diesel for example?

(Simultaneous speaking.)

MR. DINSMORE: Yes.

MR. COLLINS: Only for these events. Only for the beyond design-basis events but you can credit any non-safety equipment.

MEMBER STETKAR: Under this rule, that non-Q diesel (phonetic) would be listed in the tech specs so it's part of your inventory of things you need to keep track of.

MR. DINSMORE: Okay. Back to the ways you can change these numbers. The expert elicitation produced a lot of numbers, a lot of numbers. We used 10 the minus 5 as a basis how ever you can come in and licensees have already started to come and argue to use other sorts of numbers and the NUREG itself says you need to -- you choose and use a number that is appropriate for what you are using it for which just provides flexibility.

But if you assume the LOCA arithmetic mean frequency, that's 5 times 10 to the minus 6 per year

and that reduces risk or increases AOT by a factor of 2. Now factors of 2 in risk basis are small but when you talk about two weeks versus four weeks, it becomes -- you start to notice them.

You could also come in and assume the LOCA geometric mean frequency, which is actually 10 to the minus 6 per year for 12 inch PWR break and that would reduce risk or increase the AOT by a factor or 10 and if you look at industry's presentations when they come in on this rule, they usually use the geometric mean frequency. That's why you'll see 10 to the minus 9s on their charts and 10 to the minus 7s.

So we still -- it's still unclear as to which one of these curves we are going to use when, but the argument certainly can be made, and if we don't have a fixed 14 days and we are in the process of reviewing and trying to decide whether to accept the licensee's proposal, we have to deal with each one of these reasonable arguments.

And then the last one here, if the unanalyzed condition is bigger than 12 inches, let's say they can handle a 25 inch LOCA, so that's 25 inches or up -- I get in trouble -- less I am all right, can they use the frequency from the 25 inch break?

These are going to come up in all problems but this problem is particularly awkward or difficult to deal with. And we also recently increased the AOT guidelines from five times 10 to the minus 7 to 10 to the minus 6, which is still -- it's in the draft reg guide. So that is another factor too.

So you can see you pretty quickly get up to 180 days or -- it very quickly gets to be kind of a waste of time.

There is a 30 day longest tech spec allowed in tech spec 4D so you could set a limit for 30 days, you could choose 90 days because 90 days is the difference between the temporary change and a permanent change, so there are kind of things but again, we thought that the 14 days was a very reasonable amount of time and then it would be enough and it would allow us time to fully develop these more complicated situations where you want to do it somehow based on risk. And actually that's the end of my presentation on the 14 days because I was going to let Mr. Dube deal with the new reactor 14 days. So if there's any questions or comments.

MEMBER SHACK: I think we can move on.

MR. DUBE: Thank you. I'm Don Dube, Office of New Reactors, Division of Safety Systems and Risk

Assessment. You are correct, I wasn't here for the subcommittee meeting but my understand was that the concern was with regard to the application of the risk acceptance criteria with the new reactor design.

So a little bit of history. We were a little bit challenged in the sense that in August of 2009 when the federal register notice went out, we were in the early stages of addressing what we called risk metrics at the time. So because of that the NRC requested comments form the public and other stakeholders on the use of a large release frequency versus a large early release frequency, not knowing if that was the direction that the commission would take us when they issued the direction on the commission paper, and also that the very small and minimal be one decade lower for new reactors.

Then, as you know, all the history is we had a draft commission paper that you reviewed in May and June and a briefing of the full ACRS in June followed by an ACRS letter supporting the staff's recommendation on option 2.

But over the past 12 months the staff view has evolved to that of hard and fast numerical risk metric changes to that of modifying a risk-informed regulatory guidance for new reactors. That's still

ongoing. We just issued a few weeks ago that commission paper, SECY-10-0121 and there is a briefing next week with the NRC commission to discuss the options and the staff's recommendations and there will be stakeholder comments as well.

We got comments on the Federal Register Notice regarding use of large release frequency and the lower risk metrics if you will. And the staff agreed with the external stakeholder comments that it would be premature to address risk metrics of core damage frequency and large release frequency or LERF pending the commission direction on the paper and the unfortunate thing is that these two processes, changes are going on almost simultaneously, the 50.46a final rulemaking and when the commission may vote, provide the staff direction on alternate risk metrics or modifying the risk-informed regulatory guidance.

So staff convened and discussed and decided the best approach to use which was to insert in both the statement of considerations and the rule, consistent with what the staff was recommending that is option 2 in the commission paper. That's the -- just to refresh your minds especially for new members or since it's been a few months, option 1 of the commission paper is status quo, that is new reactors

will be treated the same as currently operating reactors with regard to acceptance guidelines in reg guide 1174 and the reactor oversight process thresholds, which are risk-informed.

At the other extreme is option 3, which is a direct lowering of the numerical acceptance guidelines and thresholds in reg guide 1174 and the ROP and option 2 is in the middle which is let's take a look, let's review all of the change processes for new reactors, identify, do some tabletops perhaps, identify if there's gaps and identify whatever modifications to the risk-informed guidance might be necessary to ensure that there is no significant decrease in the level of safety provided by the new reactor designs.

So this quote and I won't read it because it's right down page 25, has been inserted. Next slide.

Pending direction from the commission, as a result of commission direction, different guidance is promulgated that describes new metrics to be used for new reactors that we will have to make appropriate changes to 50.46a if we can before it goes into effect, or if not, changes afterwards.

So option 2 would to a large extent

already be covered. We have the wording in the statement of considerations and the rule. We would still have to promulgate and make changes to the guidance.

Option 1, if the commission directed us, which means treat new reactors the same as current reactors, it would be no changes.

CHAIRMAN ABDEL-KHALIK: But it would be internally inconsistent.

MR. DUBE: It would be 14 days for new reactors, the same as current reactors. And if it was option 3, it would be some other time. Now whether one would realistically change 14 days to 1.4 days, I'm sure not, but since it's a sliding rule I'm just going to give you a for instance: if rather than say 14 days every year it might be 14 days every three years or four years or five years or something on the sliding average, a new reactor could still make some use out of that.

And while I haven't directly said anything about risk numbers here, one should expect, and I understand there -- for the purpose of doing an analysis of the maximum possible risk that might be accrued, one would use the 14 days every year, but one should expect that certainly for the new designs with

active safeguards, they all have at least three emergency core cooling system trains. The ABWR three, the EPR 4 train and the USAPWR 4, 50 percent trains at least for design basis. One should expect at least based historically, to have to take advantage of this less often than let's say a currently operating reactor with just two trains of ECCS. Does that address your concerns?

MEMBER SHACK: Well, you know, part of it is one, the commission hasn't approved this direction and two, this is really a concept. I mean the whole point of your SECY paper is okay we have this concept but okay how do we actually implement this? And once upon a time we were dealing with 50.46b and some of the committee wanted to put in a sort of a generic requirement that you maintained ductility of the cladding and then leave to a reg guide whether that meant 2200 S 17 percent, just exactly how to demonstrate that and we were told no, you can't do that, you know in a rule you have to be specific. Well here we are with a concept that is sort of as yet undefined in a rule. MEMBER CORRADINI: Well they have made the concept consistent though. That's a positive step.

MEMBER SHACK: I am only giving the -- the

plus side is at least it's consistent with where we think this is going to go. The question is whether it is specific enough to be really part of rule language or not. And my own personal opinion is it's still premature but -- why does the staff want it so badly in the rule?

MEMBER CORRADINI: What is the downside risk of not having it in the rule until you know what you want to do with new reactors?

MEMBER SHACK: Some of the many of the new reactors I don't see will get a whole lot of benefit out of this.

CHAIRMAN ABDEL-KHALIK: That was my question. Why would a new reactor design adopt this?

MR. DUBE: Practically speaking, as was mentioned, certainly the passive plants probably would have very little to gain from it and even many of the new designs, but it's to not leave out -- other than this is an administrative question, not a risk question. Other than the not treat new reactors significantly differently than currently operating fleet and being inconsistent in a risk-informed application.

MEMBER CORRADINI: So the answer is completeness. Even though the completeness is a fuzzy

completeness. Is that what I understand to be the answer?

MR. DINSMORE: Well, we are trying to reduce the fuzziness. When new reactors was put in there, the discussion as I recall was well, why shouldn't it apply to new reactors?

MEMBER SHACK: Technically I don't see any reason why I should. I mean you know the materials are better, the chemistry is better, their LOCA frequencies are going to be lower so from that point of view -- but again, when you try to decide what's an allowable risk change, that's still something we are trying to figure out.

So I think certainly some time as soon as we figure out what is an allowable risk change, they can -- there is certainly technically no reason -- they will have better seismic qualification, everything is plus for them except we haven't figured out exactly how to come up with a risk-informed process for them yet.

MEMBER ARMIJO: By new reactors, do you mean a newly-certified design or an amended certified design? I mean what's really a new reactor? Would an ABWR be a new reactor?

MR. DUBE: Certified under part 52.

MEMBER CORRADINI: Well, wait a minute. Do you really want to make that as the answer? What if somebody comes in with a new reactor and uses part 50? It's still going to be a new reactor.

MEMBER RAY: No, not like what's --

MEMBER CORRADINI: What if mPower comes in and wants to put one with TVA at Clinch River and uses part 50? Is that a new reactor?

MR. DUDLEY: For the purposes of the rule, the rule defines new reactors as any reactor that is licensed after the issuance of the rule so it could be a part 50 reactor.

MEMBER CORRADINI: Okay that's fine. I just wanted to make sure because --

MEMBER SHACK: Further comments or questions for Mr. Dube? Or for anyone else?

MEMBER CORRADINI: So can I just clarify one other thing though Don? So the way you guys have structured this, you wouldn't have to go back and change the rule because the language is -- pardon the lack of proper English here -- fuzzy enough that it has every eventuality considered? Or would you have to go back and change the rule?

Now I am administratively asking a question which is, is what you have written there good

whether the commission comes down as just like current plans, much more strict than current plans or somewhere in the middle to be determined?

MR. DUBE: No if they said option 1, we would have to change this language or option 1 or 3.

MEMBER ARMIJO: So this works only for the option 2.

MR. DUBE: Okay.

MEMBER CORRADINI: Thank you.

MEMBER RAY: Well Bill I apologize for being maybe too strident -- given it is good to be back here. I am still worried about the way to articulate the change in the public domain. I understand that that is water over the dam but I --

MEMBER SHACK: Well, that's a problem.

MEMBER RAY: I shouldn't call it sophistry. I apologize for that but nevertheless it is troubling to me because of the so much of what I have had to OD is to explain these things and I'm not talking about the laymen, I'm talking about the policymakers.

MEMBER CORRADINI: That's worse than laymen.

MEMBER RAY: And I shake my head when I think about it.

MEMBER SHACK: Well, if there's no more

questions for our presenters, I would like to thank them for an excellent presentation. I think you really did a good job of presenting all this in a very clear way. I think it highlights a number of the issues for us and we will no doubt have some interesting discussions. Back to you Mr. Chairman.

CHAIRMAN ABDEL-KHALIK: Thank you. At this time we are off the record. We will take a break until five after. At that point we will start reading Dr. Corradini's letter and then we will read Dr. Shack's letter.

(Whereupon the above-entitled matter went off the record at 4:47 p.m.)

GE Hitachi Nuclear Energy

RAI 6.2-202 (with supplements): PCCS and ICS Hydrogen

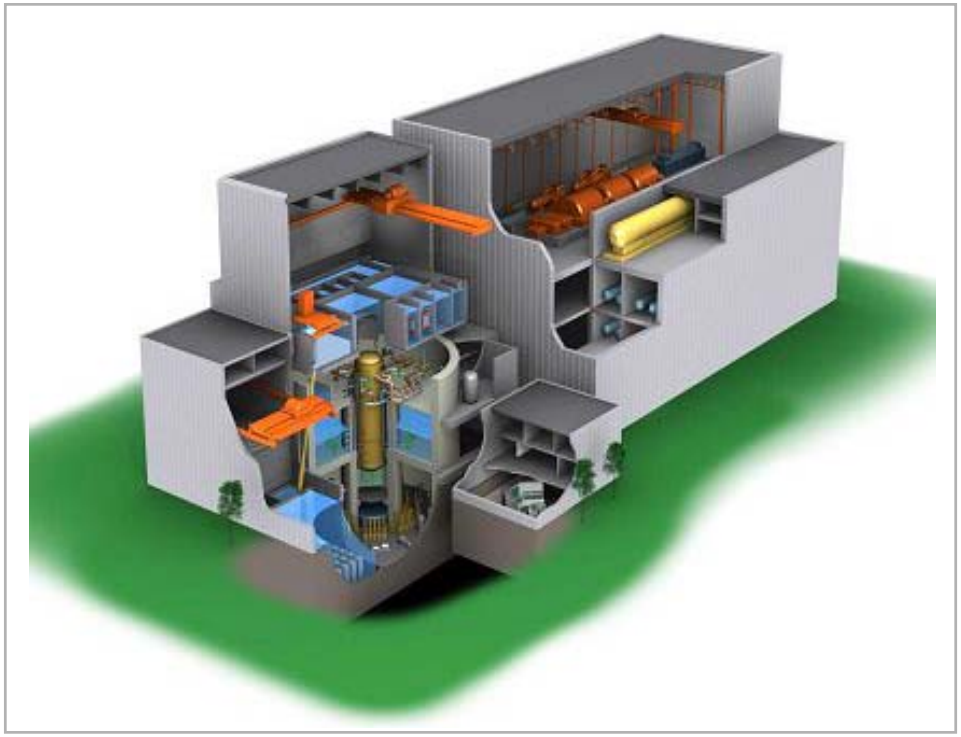

Advisory Committee on Reactor Safeguards

Jesus Diaz-Quiroz
Jerry Deaver
Wayne Marquino

October 7, 2010

HITACHI

Copyright 2010, GE-Hitachi Nuclear Energy Americas LLC
All Rights Reserved

RAI 6.2-202; Hydrogen/Oxygen Accumulation

Summary from RAI question:

"Explain how ESBWR would address possible accumulation of combustible concentrations of hydrogen and oxygen in the PCCS and the ICS."

Summary of GEH Response:

PCCS: Portions of the condenser now designed to withstand detonation. In addition, catalyst added to vent line to mitigate accumulation and RTNSS igniters added for severe accident scenarios.

ICS: Isolate during LOCA and continuously vent during non-LOCA events to mitigate accumulation.

HITACHI

ICS Gas Accumulation Summary

Non-LOCA

- Vent continuously with existing lower header vent lines
  - Vent valves automatically open after ICS is initiated with a six hour time delay
  - Flow restricting orifice limits RPV inventory losses
- High ICS Steam Fraction Keeps Condenser Outside Flammability Limits for Non-LOCA Events

LOCA

- Isolate the condenser after stored condensate drains to RPV.
  - Automatically close ICS containment isolation valves after DPVs are confirmed open
- Isolation minimizes accumulation of radiolytic gas.
- ICS design pressure bounds postulated detonations at these conditions.

HITACHI

PCCS Summary

PCCS robustly designed to withstand hydrogen/oxygen detonation

- Bounding mixture of hydrogen and oxygen was used to conservatively determine bounding detonation load which includes a factor for reflections and factor for dynamic interaction.
- Detonations are assumed in tubes, lower header, and drain line.
- Catalyst module added to entrance of vent line to mitigate gas accumulation.
- For the bounding case, a total of 600 cycles has been analyzed.
- Material changed from 304L to high strength XM-19 for upper header, tubes, lower header, drain line, and support saddles and increased wall thickness of these components.
- All ASME Class MC PCCS components meet Service Level C acceptance criteria for combination of detonation, seismic, thermal, and dead weight loads.
- Performed dynamic analysis of detonation wave in lower header to account for lower header support reactions loads.

HITACHI

PCCS Configuration

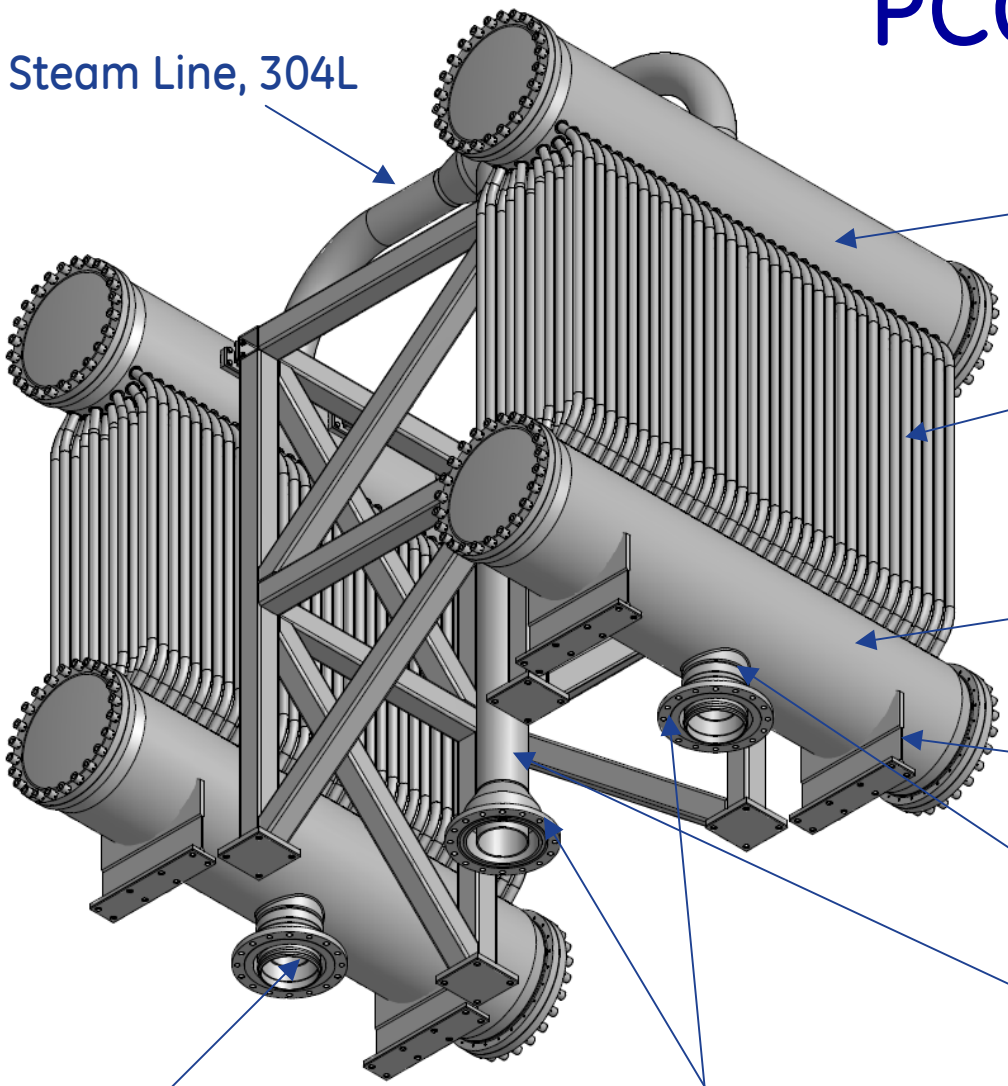

HITACHI

Back Up Slides

HITACHI

Accumulation of Radiolytic Gas

- Hydrogen and oxygen are produced through radiolysis in the reactor
- BWR components that continuously condense RPV steam while removing condensate are subject to potential accumulation of radiolytic gas (H_2 and O_2)
- For ESBWR, two components meet above criteria - the PCCS and ICS condensers
- PCCS condenses steam during LOCA
- ICS condenses steam during non-LOCA (e.g. station blackout) and during LOCA if not isolated

HITACHI

Detonation Pressures

- PCCS detonation pressure for stoichiometric hydrogen and oxygen at 1 atm and 25 °C is 19 atm: ratio of detonation pressure to initial pressure, P_{CJ}/Po, of 19.

- P_{CJ}/Po will decrease with increasing steam dilution while maintaining hydrogen and oxygen at stoichiometric ratio at constant temperature.
- Hydrogen-Oxygen-Steam mixtures are flammable below 80% steam[1].
- Detonation pressure load used for PCCS design is 38.7 MPa (19*0.407*2.5*2)

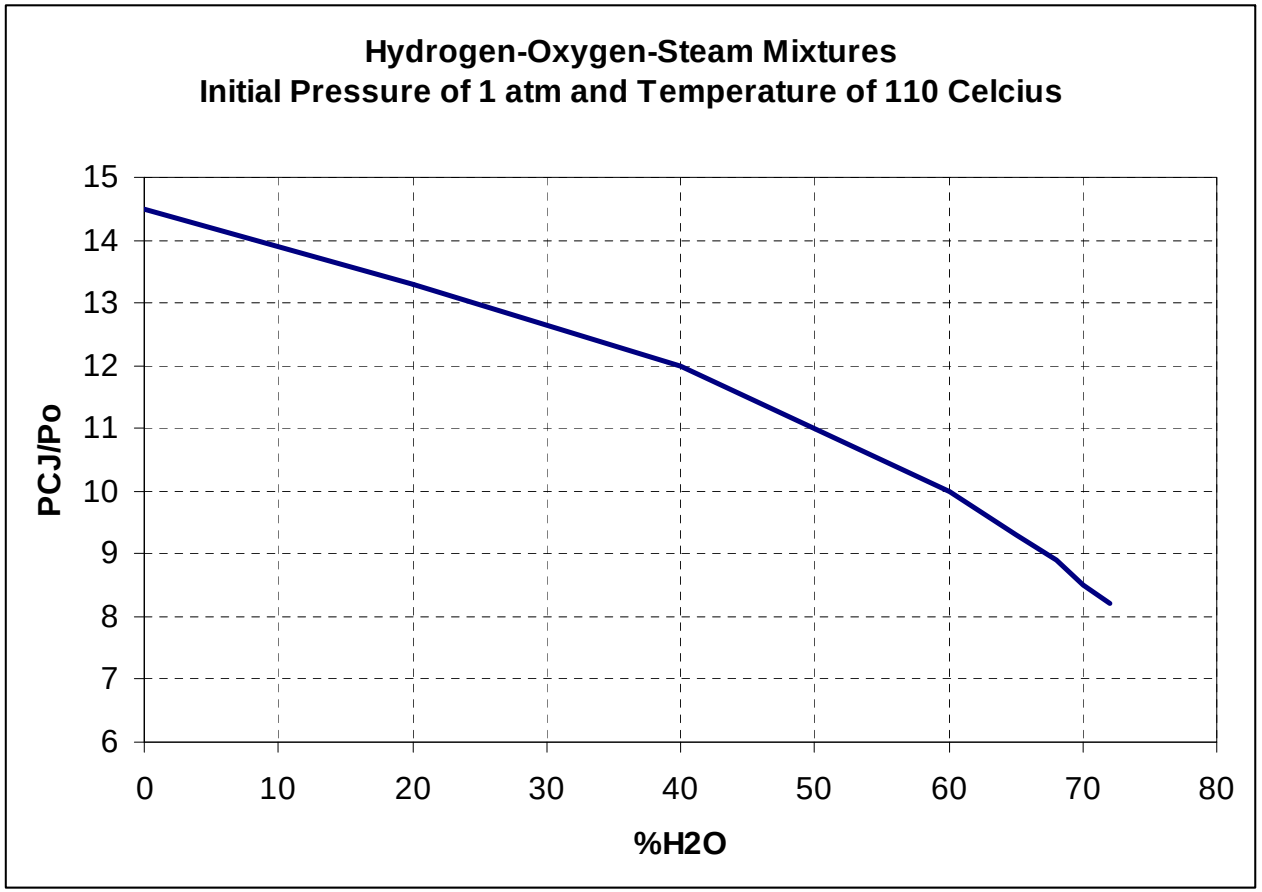

Data from p. 5.1.32, COMBUSTION OF BWR-TYPICAL RADIOLYTIC GAS MIXTURES, W. Breitung et al, FZK Report 2007

1. Y. N. Shebeko et al., "The Influence of Inert Retardants on the Combustion of Hydrogen-Oxygen Mixtures Under Elevated Temperatures and Pressures". Combustion, Explosion, and Shock Waves Vol. 30, No. 2, 1994.

HITACHI

Presentation to the ACRS

General Electric Hitachi Nuclear Engineering Company
ESBWR Design Certification
Aircraft Impact Assessment (AIA) Inspection

Presented by NRO/DCIP, NRO/DSRA, and NRO/DE

October 07, 2010

GEH AIA Inspection
Presentation Outline

- Inspection Overview
- Inspection Bases and Guidance
- Inspection Objective
- Inspection Activities
- Inspection Outcome
- Inspection Closure Activities

GEH AIA Inspection
Inspection Overview

- Conducted July 26-28 and August 30 to September 1, 2010 at the GEH Corporation Facility in Wilmington, NC.

GEH AIA Inspection
Inspection Bases and Guidance

- Inspection Basis
  - 10 CFR 50.150, Aircraft Impact Assessment
- Guidance Documents
  - IP 37804, Aircraft Impact Assessment (4/27/10)
  - Draft Regulatory Guide 1176 which endorses NEI 07-13, Methodology for Performing Aircraft Impact Assessments for New Plant Designs

GEH AIA Inspection
Inspection Objective

- Verify that GEH implemented the provisions of 10 CFR 50.150 such that, with reduced use of operator action, the applicant's design can withstand the effects of a large commercial aircraft impact.

GEH AIA Inspection
Inspection Activities

- Verify through sampling that the AIA meet s 10 CFR 50.150 requirements and the guidance set forth in Draft Regulatory Guide (DG) 1176
- Evaluate any deviation from the approach described in DG-1176
- Verify that the AIA includes an assessment of the following technical elements:
  - aircraft impact characteristics
  - plant functions, structures, systems, components, and locations
  - damage mechanisms (physical, shock and vibration, and fire assessments)
  - potential responsive actions and strategies

GEH AIA Inspection
Inspection Activities

- Verify that the AIA adequately evaluates design-specific structural damage consistent with IP 37804, Appendix A, “Structural Inspection Guidance”
- Verify that the AIA adequately assesses fire-damage consistent with IP 37804, Appendix B, “Fire Damage Inspection Guidance”
- Verify that the AIA adequately evaluates system-loss and the plant’s capability consistent with the guidance in IP 37804, Appendix C, “Specific Systems-Loss Inspection Guidance”
- Verify that AIA documentation and records are being properly maintained

GEH AIA Inspection
Inspection Outcome

- Multiple examples of a single violation:
  - GEH did not use realistic analyses for certain aspects of its AIA:
    - accurately determine fire-damage footprints
    - adequately consider finite element analyses boundary conditions, initial conditions, and the time duration
    - perform mesh refinement sensitivity analyses
    - provide a technical justification for the preliminary impact scenarios selected and not selected for the final structural analyses using the NRC specified loading and the material properties given in NEI 07-13, Rev. 7

GEH AIA Inspection
Inspection Outcome

- Multiple examples of a single violation:
  - GEH did not use realistic analyses for certain aspects of its AIA:
    - include in the AIA the basis for not performing an analysis for an aircraft impact on the gantry crane and the corresponding potential effects of the crane dropping on the drywell head
    - consider non-local effects from an aircraft impact
    - GEH did not fully identify and incorporate some design features and functional capabilities into its design such as fire barrier design features

GEH AIA Inspection
Inspection Outcome

- Based on the examples noted, the NRC staff determined that one violation of 10 CFR 50.150(a)(1) occurred.
- The violation cites that GEH, in certain aspects of its AIA, failed to use realistic analyses and did not identify and incorporate into the design those design features and functional capabilities credited to show that the reactor core remains cooled, or the containment remains intact; and spent fuel cooling or spent fuel pool integrity is maintained.
- With the exception of the issues identified in the NOV, the portions of the ESBWR AIA reviewed by the NRC inspection team met the requirements of 10 CFR 50.150 and was conducted consistent with the guidance provided in NEI 07-13

United States Nuclear Regulatory Commission

Protecting People and the Environment

Presentation to the ACRS

ESBWR Design Certification Review: Chapter 6 – Engineered Safety Features: Hydrogen Accumulation in PCCS and ICS (RAI 6.2-202)

Hanry Wagage

October 7, 2010

Staff Review Team

- **Project Manager**
  - **Bruce Bavol**

- **Technical Staff**
  - **NRO/DSRA/SBCV Reviewer – Hanry Wagage**
  - **NRO/DSRA/SRSB Reviewer – George Thomas**
  - **NRO/DE/EMB1 Reviewer – Tuan Le**
  - **NRO/DE/SEB2 Reviewer – Samir Chakrabarti**
  - **NRO/DE/CIB2 Reviewer – Robert Davis**
  - **Consultant – Joe Shepherd – Caltech**
  - **Consultant – Mano Subudhi – BNL**
  - **Consultant – Manuel Miranda – BNL**

Background

- ACRS raised a concern on the possibility of hydrogen accumulation in PCCS at a November 2009 meeting
- The staff expanded the issue to ICS
- Regulatory Criteria: 10 CFR 50.46(b)(5), and GDC 38 and 50 of 10 CFR 50 Appendix A
- Staff issued RAI 6.2-202 and supplements and discussed concerns in public meetings
- The staff consulted experts in detonations and structural analysis

Passive Containment Cooling System

- GEH enhanced the design of PCCS to perform its safety function after undergoing multiple hydrogen detonations
- GEH conservatively assumed limiting conditions in calculating detonation pressure loading and its dynamic effects
- PCCS components serving as the containment boundary meet the requirements of ASME Code, Class MC components; the remaining components meet Subsection NC requirements
- An ITAAC will confirm PCCS heat transfer capability using a type test

Isolation Condenser System

- LOCA sequences: ICS is not credited, except for its condensate inventory; ICS will be isolated before significant hydrogen accumulation
- During non-LOCA sequences: venting into the suppression pool after 6 hour time delay prevents building hydrogen in ICS to detonable levels
- Steam supply piping to the venturi and the drain piping from the Tee in pool meet ASME Subsection NB requirements; the remaining components meet ASME Subsection NC requirements
- ESBWR ICS design capacity bounds loading from possible hydrogen detonations

Conclusions

- ESBWR PCCS is designed to perform its intended safety function after undergoing multiple hydrogen detonations
- ESBWR ICS design capacity bounds loading from possible hydrogen detonations
- Issues on hydrogen accumulation in PCCS and ICS are resolved and RAI 6.2-202 is closed

GEH AIA Inspection
Inspection Closure Activities

- GEH has 30 days from the date the inspection report was issued to respond
- NRC will review GEH's response to:
  - Verify complete response to each individual finding
  - Verify that GEH extended its review, where applicable, beyond the specific examples identified and that GEH provides appropriate oversight
  - Determine if a follow-up inspection needs to be performed

GEH AIA Inspection

Discussion / Questions

United States Nuclear Regulatory Commission

Protecting People and the Environment

Presentation to the ACRS

ESBWR Design Certification Review: Chapter 7 – Instrumentation and Controls

Dinesh Taneja

October 7, 2010

Watchdog Timer

1) In which modules of the RTIS/NMS platform are watchdog timers located?

2) Can a watchdog timer reset (re-boot) a processor without it being detected?

The DCD states:

- The RTIF-NMS hardware has watchdog timers for various logic processors and logic functions that monitor the execution of the software
- If the software stops executing (suspending the self diagnostics), its watchdog timer resets the affected logic processor or logic function
- Any watchdog timer reset results in a channel trip and alarm while the logic processor or logic function is resetting
- RTIF-NMS design complies with IEEE-603 Criteria 5.2 and 7.3, “Completion of Protective Actions”

Watchdog Timer (cont.)

- IEEE-603 Criteria 7.3 in parts states:
  - The design of the execute features shall be such that once initiated, the protective actions of the execute features shall go to completion. When the sense and command features reset, the execute features shall not automatically return to normal; they shall require separate, deliberate operator action to be returned to normal.
- ESBWR DCD Tier 1 DAC/ITAAC items 9a1, 9a2, 9b1, and 9b2 require verification of compliance to IEEE-603 Criteria 5.2 and 7.3

Watchdog Timer (cont.)

Staff finding

- Any watchdog timer initiated reset will result in a trip in the effected channel and the condition alarmed in the control room. A deliberate operator action is required to manually reset this divisional trip condition. Therefore, any watchdog initiated rest/reboot of any of the RTIS/NMS modules is designed to be fully detectable.
- The staff finds that ESBWR RTIF/NMS design meets the applicable regulation in IEEE-603 based on the review of staff guidance in SRP and BTP 7-21, and review of NUREG/CR-6083.

GEH Nuclear Energy

ESBWR Design Certification
Chapter 7 I&C

Advisory Committee on Reactor Safeguards

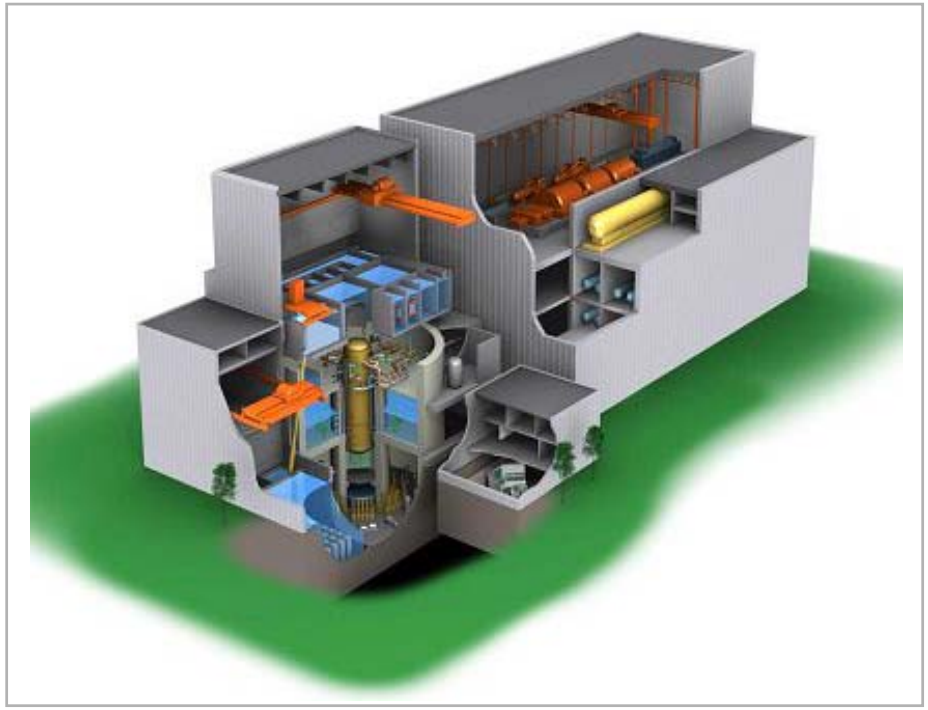

Skip Butler

October 7, 2010

HITACHI

Copyright 2010, GE-Hitachi Nuclear Energy Americas LLC
All Rights Reserved

Open Question from ACRS Meeting on 24 Sept.

Watchdog Timers in RTIF-NMS Platform…

- What is the system response if there are problems with the watchdog timers?
- What is the time associated with a reboot?

Watchdog Timers... A Generic Definition

In alignment with... BTP HICB-21 and NUREG-6083 Guidance on Digital Computer Real-Time Performance

Watchdog timer is a monitoring and corrective action function that triggers a system reset or reboot if the application program being monitored neglects to regularly service the watchdog timer. Servicing the watchdog timer is usually achieved by writing a digital pulse to it from the program being monitored.

Watchdog timer will reboot the application program when a fault condition occurs in the program causing it to become non responsive (e.g.; hang).

Objective of a recovery using a reboot is to **bring the system back from the unresponsive into an available or operational state**.

Watchdog timers may be implemented in hardware only or software. They may be implemented in a segmented portion of the same microchip or on a separate chip. In any case, the **watchdog timer is independent from and external to the application processor**.

Watchdog timers **MAY be used, as one of several methods, to trigger "fail-safe" control systems** which command specific actions thereby putting equipment into a **"safe state"** until the fault is cleared.

Watchdog Timers... Q-DCIS Description in DCD

7.1.3.4 Q-DCIS Testing and Inspection Requirements

4th Para.:

The **RTIF-NMS** hardware has **watchdog timers** for various logic processors and logic functions that monitor the execution of the software. If the software stops executing (suspending the self-diagnostics), its watchdog timer resets the affected logic processor or logic function. This results in a channel trip and alarm while the logic processor or logic function is resetting.

5th Para.:

The **SSLC/ESF** platform is a **Triple Modular Redundant (TMR) system**, with three main processors. The main processors are monitored by individual **watchdog timers** that reset or fail a main processor depending on the severity of the problem. A single or double main processor failure causes alarms, but the division continues to function to provide the required automatic protective actions.

6th Para.:

Both RTIF-NMS and SSLC/ESF are cyclically tested from the sensor input point to logic contact output. The self-diagnostic capabilities include power supply checks, microprocessor checks, system initialization, **watchdog timers**, memory integrity checks, I/O data integrity checks, communication bus interfaces checks, and checks on the application program (checksum). Cyclically monitored items include:

6th Para., 4th Heading – Response Time Test:

The **response time test is performed by a series of sequential, overlapping, or total steps to measure the entire response time**. The logic processor or logic function self-diagnostics and the TSM support the performance of the response time test for the safety-related platforms. **Watchdog timers** monitor logic processor or logic function internal clocks and alarms for out-of-limit conditions and the completion of application code per logic processor or logic function cycle. Since the clocks set the response time, there is no mechanism for the response time to change without alarm or trip.

Q-DCIS Does NOT use Watchdog Timers to initiate "Fail-Safe" action
Q-DCIS Does NOT use Software based Watchdog Timers

Watchdog Timer resets RTIF (RPS)… What is cycle time?

Based on existing designs (e.g.; GEH ABWR Lungmen), reasonable expectations for the reboot behavior and performance of processors in ESBWR's RTIF (RPS) are:

- **Application program loop cycle time is ~20 milli-seconds Therefore…**
- **Watchdog timer is pulsed once ~20 milli-seconds**
- **After adjustable time (<200 milli-sec.)… If there is no service pulse to watchdog timer, then it will time out and initiate a reset of the processor's program**
- **Nominal reset or reboot time for the application processor is several seconds (<5 sec.) before program comes back on line**

Any RMU, DTM, or TLU Processor reboot Does NOT prevent… Completion of Protective Action – IEEE Std. 603 Criteria 5.2 and 7.2

Watchdog Timer affect… Conclusion

- Processor reboot triggered by Watchdog Timer does NOT affect downstream interpretation of "Loss of Communication" as a TRIP
- Interpretation of TRIP happens in 1 cycle time
- Rebooted processor comes on line in TRIP Status
- TRIP Status shall only be reset by Manual Operator Action

Any RMU, DTM, or TLU Processor reboot does NOT prevent Completion of Protective Action per IEEE Std. 603 Criteria 5.2 and 7.2

Back-Up

DCD Figure 7.2-1

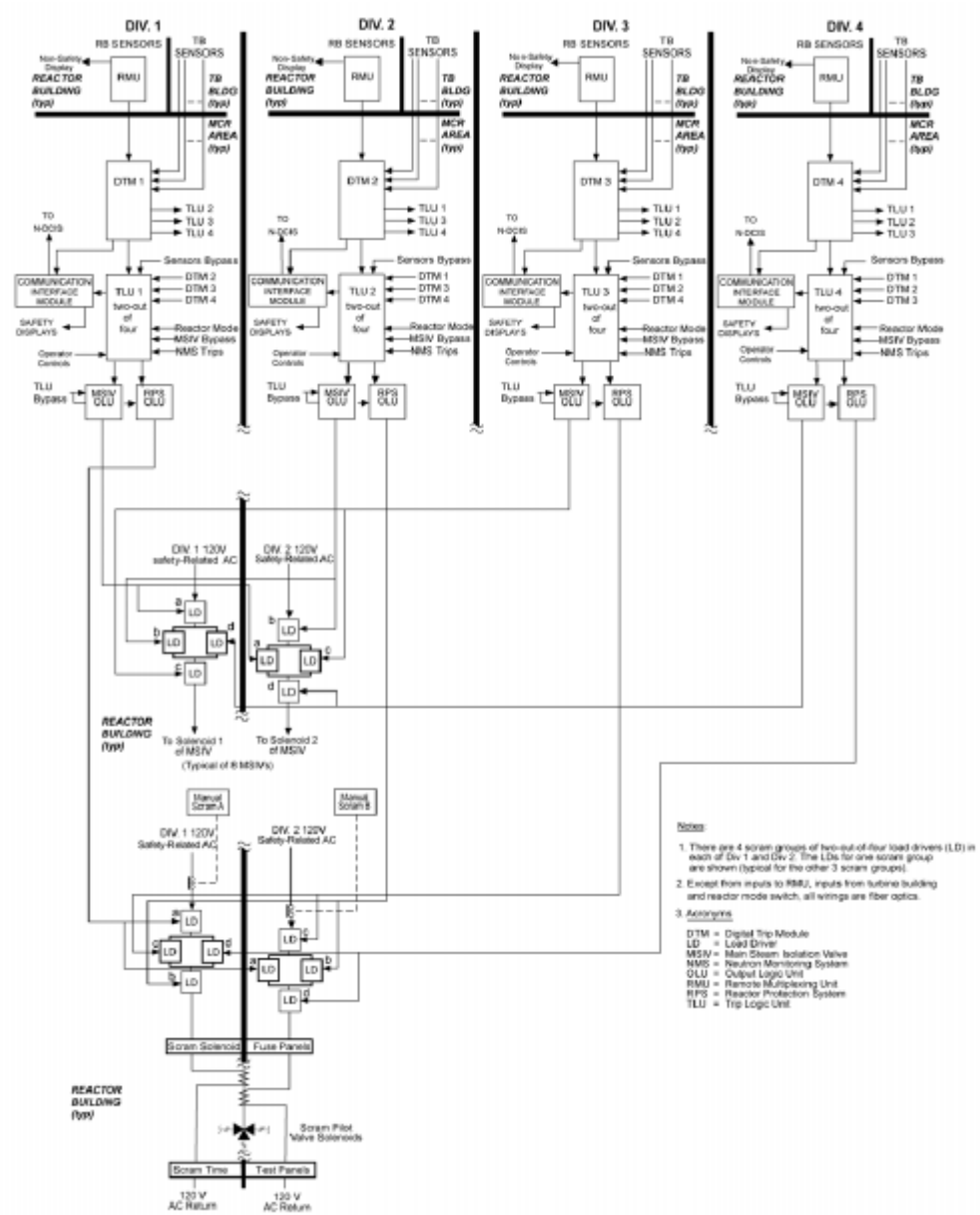

Figure 7.2-1
RPS Simplified Functional Block Diagram

DCD Figure 7.2-11a

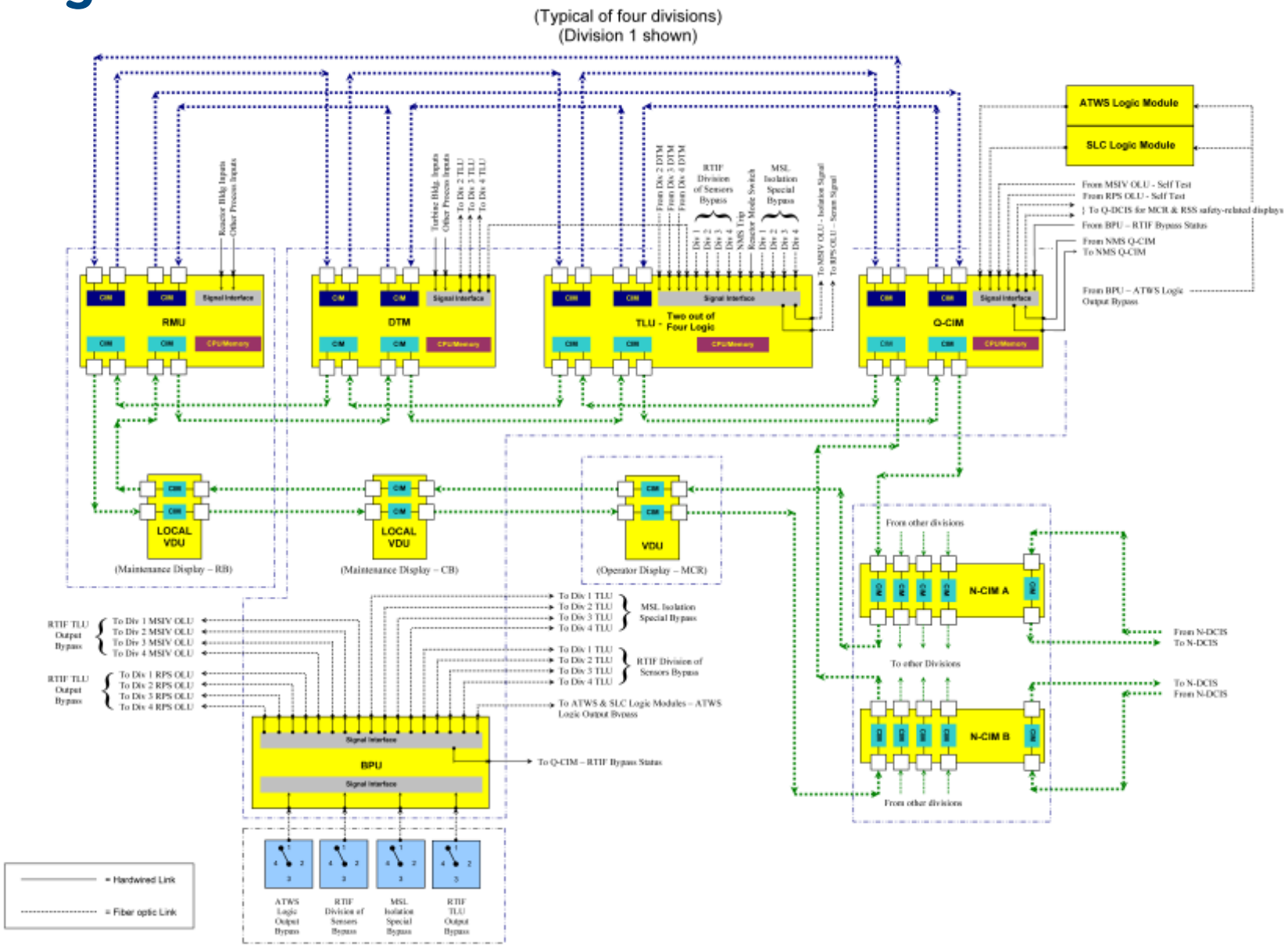

Figure 7.2-11a

Reactor Trip and Isolation Function (RTIF) Simplified Functional Block Diagram

DCD Figure 7.2-11b

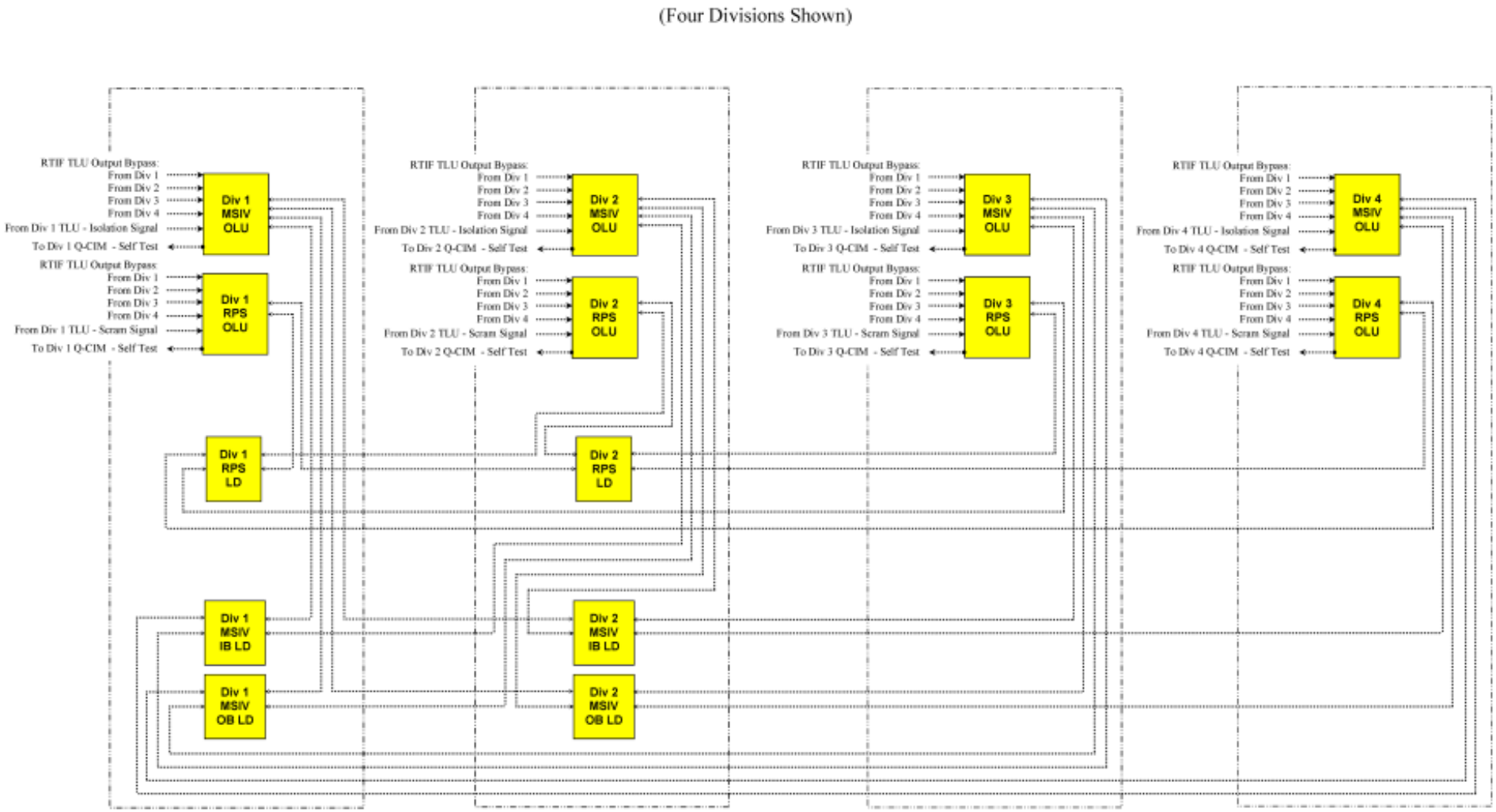

Figure 7.2-11b
Reactor Trip and Isolation Function (RTIF) Simplified Functional Block Diagram – Output Logic Unit Detail

Watchdog Timers in… SSLC/ESF Platform

SSLC/ESF uses a different hardware / software architecture from RTIF-NMS

- Is NOT "Fail Safe" but rather "Fail As Is"
- Does NOT distribute programs into different modules, cards and chassis
- Does use Triple Modular Redundant (TMR) processors each with their own monitoring, diagnostics, and Watchdog Timers
- Any single processor failure will be identified, diagnosed, and "out voted" by the remaining "2-out-of-3" TMR processors
- Function will be performed even with "1-out-of-3" TMR processors
- Loss of communication between divisions will NOT cause erroneous safety action
- If all SSLC/ESF divisions fail simultaneously, then…
  - Diverse Protection System (DPS) will perform the safety function
  - Failure condition will be alarmed in N-DCIS in general and Technical Specification Monitor (TSM) system specifically

Watchdog Timers do NOT represent a credible failure mode in SSLC/ESF

End

Cooper Nuclear Station License Renewal

Cooper Nuclear Station Personnel in Attendance

Brian O'Grady	Site Vice President and Chief Nuclear Officer
Art Zaremba	Director, Nuclear Safety Assurance
Dan Buman	Director, Engineering
Dave Bremer	Project Manager, License Renewal

Technical Staff and Project Support Personnel

Agenda

- Background
  - Current Status
  - Site Description
- Technical Items of Interest
  - SER Open Items and Emergent Request for Additional Information (RAI)
- Concluding Remarks

Background

- Current plant status
- General Electric (NSSS), Burns & Roe (A/E)
- Westinghouse turbine and generator
- BWR-4, Mark-I Containment
- 2419 MW thermal power, 830 Mwe
- Once-through cooling from Missouri River
- Staff complement: approximately 725

Background

- Submitted LRA, September 30, 2008
- ACRS Sub Committee Meeting, May 5, 2010
- Received Final SEIS, August 30, 2010
- Received Final SER, September 1, 2010
- Next refuel outage March 2011
- End of current license term, January 18, 2014

Technical Items of Interest

- OI 2.3.4.2-1 — Steam and Power Conversion Systems In-Scope for 10 CFR 54.4(a)(2)
- OI 3.0.3.1-1 — One-Time Inspection, Small Bore Piping Program
- OI 3.0.3.1.2-1 — Buried Piping and Tanks Inspection
- OI 3.0.3.2-1 — Containment Inservice Inspection Program
- RAI B.1.25-2 — Non-EQ Inaccessible Medium-Voltage Cable Program

Open Item 2.3.4.2-1

Steam and Power Conversion Systems In-Scope for 10 CFR 54.4(a)(2)

- Background
  - Condensate storage tank (CST) 1A and flow path were not included within initial scoping for license renewal
- Resolution [Closed in SER Section 2.3.4.2.2]
  - CST 1A and associated piping within have been added to the scope of license renewal and subject to aging management review

Open Item 3.0.3.1-1

One-Time Inspection, Small Bore Piping Program

- Background
  - Application included one-time inspection of small bore socket welds
    - Did not include periodic inspections or socket weld volumetric exams

- Resolution [Closed in SER Section 3.0.3.1.11]
  - CNS will perform periodic volumetric exams
    - Three Class-1 socket welded connections each 10 year interval

Open Item 3.0.3.1.2-1

Buried Piping and Tanks Inspection

- Background
  - NRC Staff had requested information regarding Buried Piping and Tanks Inspection Program
    - Changes in response to recent industry events

- Resolution [Closed in SER Section 3.0.3.1.2]
  - NPPD will develop and implement BP&T Program per industry initiative
  - NPPD will inspect a minimum of 2% total linear feet of all high-risk in-scope buried piping prior to PEO
  - NPPD will inspect at least once every 10 years a minimum of 2% linear feet of all high-risk buried pipe

Open Item 3.0.3.1.2-1

Buried Piping and Tanks Inspection

- Resolution (con't)
  - NPPD will perform annual testing and maintain the cathodic protection system in accordance with industry standards
  - NPPD will upgrade cathodic protection system

Open Item 3.0.3.2-1

Containment Inservice Inspection Program

- Background
  - Applicant has not demonstrated that the effects of the torus degradation will be adequately managed for the period of extended operation

- Resolution [Closed in SER Section 3.0.3.2.6]
  - NPPD will remove sludge and inspect wetted portion of the torus every refueling outage until torus is recoated
  - NPPD will verify torus design margin after each inspection
  - NPPD will recoat wetted portion of the torus within 3 years of entering the PEO

RAI B.1.25-2

Non-EQ Inaccessible Medium-Voltage Cable Program

- Background
  - Based on industry OE the staff concluded that low-voltage power cables should be included in an AMP
- Resolution [Closed in SER Section 3.0.3.1.7]
  - NPPD enhanced the inaccessible medium-voltage cable program to include low-voltage power cables (480 V to 2 kV) that have a license renewal intended function
  - NPPD will test inaccessible low-voltage power cables prior to PEO and at least once every 10 years thereafter

RAI B.1.25-2

Non-EQ Inaccessible Medium-Voltage Cable Program

- Resolution (con't)
  - NPPD will inspect in-scope manholes at least once every two years
  - NPPD will perform condition-based inspections of the manhole without an automatic sump pump based on:
    - a) potentially high water table conditions
    - b) after periods of heavy rain

Closing Remarks

United States Nuclear Regulatory Commission

Protecting People and the Environment

Advisory Committee on Reactor Safeguards (ACRS) License Renewal

Cooper Nuclear Station (CNS)

Safety Evaluation Report (SER)

October 7, 2010

Tam Tran, Project Manager

Office of Nuclear Reactor Regulation

Presentation Outline

- Overview of CNS license renewal review
- SER Section 2: Scoping and Screening Review Results
- SER Section 3: Aging Management Review Results
- SER Section 4: Time-Limited Aging Analyses (TLAAs)

Overview (SER)

- Safety Evaluation Report (SER) with Open Items was issued on April 6, 2010.
  - 4 Open Items (OIs):

    OI 2.3.4.2-1 - scoping of condensate storage tank

    OI 3.0.3.1-1 - management of small bore piping socket welds

    OI 3.0.3.1-2 - management of buried piping and tanks

    OI 3.0.3.2-1 - management of pitting corrosion in the torus
  - 1 Confirmatory Item (CI):

    CI 4.3.3.2-1 - use of NUREG/CR 6335 vs. 6909 for metal fatigue analyses of alloy 600 components

Overview (SER) – con't

- Final Safety Evaluation Report (SER) was issued to the applicant September 1, 2010.
  - Closure of 4 OIs and 1 CI
  - One new issue was identified and resolved, related to the management of 480 V – 2 kV low voltage power cables.

Section 2.3.4.2: Steam and Power Conversion Systems In-Scope for 10 CFR 54.4(a)(2)

OI 2.3.4.2-1 is closed.

- License Renewal Application (LRA) did not include Condensate Storage Tank (CST) 1A and flow path within scope for license renewal.
- Staff's position is that CST 1A should be in scope, in accordance with 10 CFR 54.4(a)(2), because it is a viable and allowable source of coolant for Emergency Core Cooling System (ECCS) operation during shutdown.
- Closure: Applicant amended LRA to include CST 1A within the scope of license renewal.

Section 3.0.3.1.11: One-Time Inspection, Small Bore Piping Program

OI 3.0.3.1-1 is closed.

- CNS proposed to use visual (VT-2) examination in accordance with ASME Code Section XI for socket welds.
- Given previous operating experience (OE) of socket weld failures at CNS, staff determined that periodic volumetric examinations would be consistent with GALL AMP XI.M35.
- Closure: Applicant committed to provide periodic volumetric examination in addition to visual, every 10-year interval.

Section 3.0.3.1.2: Buried Piping and Tanks Inspection Program

OI 3.0.3.1.2-1 is closed.

- Given recent industry OE related to leaks from buried and underground piping, staff is interested in efforts to incorporate such OE into aging management program at CNS.
- Staff requested late RAI B.1.3-3 on April 13, 2010, regarding buried and underground piping at CNS.
- Closure: Applicant manages the aging effect via a combination of preventive program element (i.e., cathodic protection upgrade) and condition monitoring consistent with current industry and plant operating experience.

Section 3.0.3.2.6: Containment Inservice Inspection Program

OI 3.0.3.2-1 is closed.

- Staff questioned CNS's management of pitting corrosion in the torus for long term consideration (period of extended operation or PEO) and preventive measures (e.g., recoating).
- Staff has concerns about the cumulative effect of over 2000 pits that may affect containment integrity during PEO.
- Closure: Applicant committed to manage the aging effect via a combination of engineering control (i.e., recoating of the torus) and compensatory measures (i.e., material condition inspections and removal of sludge prior and during PEO).

Management of Low Voltage Cables (480 V – 2 kV)

- Recent industry operating experience identified in responses to Generic Letter (GL) 2007-01 shows that the presence of water or moisture could lead to inaccessible low voltage (480 V to 2 kV) power cable failures.
- Staff issued RAI B.1.25-2 on August 18, 2010, regarding in-scope inaccessible low voltage power cable operating experience at CNS.
- Applicant enhanced E3 AMP to:
  - include inaccessible low voltage power cables.
  - implement tests and inspections consistent with plant-specific operating experience.

Section 4.3: Metal Fatigue Analyses

CI 4.3.3.2-1 is closed.

- Staff requested confirmation regarding the use of 1995 NUREG/CR as opposed to 2007 NUREG/CR, for calculating the environmental correction factor for nickel alloy components.
- Closure: Applicant committed to perform analyses using 2007 NUREG/CR, two years prior to PEO, or repair or replace the affected component before exceeding an environmentally-adjusted CUF of 1.0 as appropriate.

U.S.NRC
United States Nuclear Regulatory Commission
Protecting People and the Environment

Conclusion

On the basis of its review, the staff determines that the requirements of license renewal (10 CFR 54.29(a)) have been met for the license renewal of Cooper Nuclear Station.

Duane Arnold Energy Center

ACRS License Renewal Presentation

October 7, 2010

Personnel in Attendance

Christopher Costanzo	Site Vice President
Ken Kleinheinz	Engineering Director
Ken Putnam	License Renewal Project Manager
Curt Bock	License Renewal Mechanical Lead
Ken Chew	License Renewal Civil Lead
Mike Fairchild	License Renewal Electrical Lead
Clara Rushworth	License Renewal Licensing Lead
Eric Sorenson	Program Engineering

Agenda

- **Background**
- **Operating History**
- **License Renewal Project Overview**
- **ACRS LR Subcommittee Follow-Up Items**
  - Buried Piping
  - Small Bore Piping
- **Low Voltage Cable Testing**

Background – Site

- Approximately 6 miles NW of Cedar Rapids, Iowa
- General Electric (NSSS & Turbine Generator)
- Bechtel (AE and Constructor)
- BWR- Mark I Containment
- 1912 MWt Thermal Power; ~ 630 MWe
- Cedar River is ultimate heat sink and water makeup source. Forced draft cooling towers for condenser cooling
- Staff Complement: approximately 610

Background – Plant Status

- Startup from Refuel Outage 21 – March 2009
- Current Plant Status
- Next Refuel Outage – October 23, 2010

Operating History – Licensing

Construction Permit	June 17, 1970
Operating License	February 22, 1974
Commercial Operation	February 1, 1975
Uprated Power License (~5%)	March 27, 1985
Extended Power Uprate License (~15%)	November 6, 2001
License Transfer to FPL Energy (NextEra)	January 27, 2006
LR Application Submitted	September 30, 2008
Operating License Expires	February 21, 2014

Project Overview – Scoping

- **Scoping process consistent with requirements of 10CFR 54 and the guidance of NEI 95-10**
- **Utilized site component database, controlled drawings, design and licensing documents**
- **Non-Safety Affecting Safety (a)(2)**
  - Reviewed safety related equipment locations
  - Conservative “spaces” approach
  - Performed walk-downs for verification
- **Commodity groups used when evaluations were best performed by component type rather than SSC**

Project Overview – TLAA

- **Design and Licensing Basis reviewed for potential Time Limited Aging Analysis**
- **Neutron fluence was determined for DAEC operation out to 54 EFPY using RAMA methodology.**
  - Extended operation to 60 years will be bounded by 54 EFPY.
  - Fluence determined for vessel and internals.
  - Pressure/Temperature Curves created for 54 EFPY.
- **Thermal Cycle projections updated for 60 year life**
  - Used to evaluate fatigue for 60 year life.
- **Environmental Fatigue evaluated for locations identified in NUREG/CR-6260 using NUREG/CR-6583 and 5704**
- **Environmental Qualification files and calculations updated to 60 year life, preplanned tasks initiated for component maintenance and replacement**

Project Overview – Application of GALL Programs

- **43 Aging Management Programs**
  - 19 Programs in place with out Enhancements
  - 10 Programs will be Enhanced
  - 14 New Programs
- **GALL Consistency**
  - 28 Consistent
  - 11 Consistent with Exceptions
  - 4 Plant Specific
    - Electrical Connections Program
    - Electrical Penetration Assembly Program
    - ASME Code Class 1 Small-bore Piping Inspection Program
    - Boral Surveillance Program

Project Overview – Commitment Process

- 53 Regulatory Commitments for License Renewal
- Commitments entered into site commitment tracking system
- Implementation activities underway to ensure completion well in advance of Period of Extended Operation
- Retain portion of project core team to support implementation activities with program owners
- Specific projects for larger items

ACRS LR Subcommittee Follow-up Items – Buried Piping

- **Issue**
  - Recent industry events involving leakage from buried and underground piping may warrant changes to the Buried Piping and Tanks Inspection Program beyond requirements in GALL Rev. 1
- **Resolution**
  - Program enhanced to specify periodic inspection of each material environment combination and prioritizes piping containing hazardous material
  - Program enhanced due to DAEC recent operating experience with leak on fire protection header to incorporate additional inspections of ductile cast iron
  - Program enhanced to specify cathodic protection target reliability of >90% and periodic NACE surveys

ACRS LR Subcommittee Follow-up Items – Small Bore Socket Welds

- **Issue**
  - NUREG-1801 recommends a volumetric examination of Small Bore Class 1 Piping using qualified techniques
  - No industry accepted qualified volumetric exam technique for socket welds exists
- **Resolution**
  - Perform periodic volumetric exams of 10 percent of Class 1 socket welds using industry qualified exam technique if it is available at time of exam
  - If no industry qualified examination technique is available at time of inspections, a plant procedure for volumetric examination will be used
  - Sample selection based on susceptibility, ability to inspect, dose considerations, operating experience and limiting locations

NEXTera ENERGY RESOURCES

Generic Industry RAI
Cable Testing

- **Issue**
  - Industry experience from Generic Letter 2007-01 indicates that power cables energized to 480V and higher can experience failures where extended exposure to water is a contributing factor
  - GALL Rev. 1 Inaccessible Medium Voltage Cable program does not require testing for inaccessible cables less than 2kV and does not require testing of inaccessible cables that are not normally energized.
- **Resolution**
  - Expanded scope of Inaccessible Medium Voltage Cable Program to include inaccessible 480 V to 2 kV power cables
  - Expanded scope of Inaccessible Medium Voltage Cable Program to include all inaccessible 2 to 35 kV power cables (not just normally energized)
  - DAEC has not experienced any 480 V to 35 kV power cable failures due to aging

Questions?

U.S.NRC
UNITED STATES NUCLEAR REGULATORY COMMISSION
Protecting People and the Environment

Advisory Committee on Reactor Safeguards License Renewal Full Committee

Duane Arnold Energy Center
Safety Evaluation Report

October 7, 2010

Brian K. Harris, Project Manager
Office of Nuclear Reactor Regulation

U.S.NRC
UNITED STATES NUCLEAR REGULATORY COMMISSION
Protecting People and the Environment

Outline

- Overview
- Open Items
- Additional Issue
- Conclusion

U.S.NRC
UNITED STATES NUCLEAR REGULATORY COMMISSION
Protecting People and the Environment

Overview

- Safety Evaluation Report with Open Items was issued May 7,2010

- 2 Open Items

  OI-3.0.3.3.3 Socket Welds

  OI-3.0.3.1.7 Buried Piping

- Additional Issue

  3.0.3.1.19 Inaccessible Power Cables

Section 3.0.3.3.3 Small Bore Piping

OI-3.0.3.3.3

- DAEC proposed to use visual (VT-2) examination for socket welds
- GALL AMP XI.M.35 recommends volumetric examination
- Given previous operating experience of socket weld failures, GALL recommends that periodic volumetric examination is necessary for managing cracking in socket welds
- Closure: DAEC committed to perform periodic volumetric inspections of socket welds

Section 3.0.3.1.7 Buried Piping and Tanks Inspection Program

OI-3.0.3.1.7:

- Given recent industry OE related to leaks from buried and underground piping, staff is interested in efforts to incorporate OE into AMPs at DAEC
- Staff issued an RAI on May 2, 2010, regarding buried and underground piping at DAEC
- Closure: Applicant manages the aging effect via a combination of preventive program element (i.e., cathodic protection upgrade) and condition monitoring consistent with current industry and plant operating experience.

Section 3.0.3.1.19 Management of Low Voltage Cables (480 V – 2 kV)

Additional Issue:

- Recent industry operating experience identified in responses to Generic Letter (GL) 2007-01 shows that the presence of water or moisture could lead to inaccessible low voltage (480 V to 2 kV) power cable failures.
- Staff issued RAI B 3.27-7 on August 16, 2010, regarding in-scope inaccessible low voltage power cable operating experience at DAEC.
- <u>Closure</u>: Applicant enhanced E3 AMP to:
  - include inaccessible low voltage power cables.
  - implement tests and inspections consistent with plant-specific operating experience.

U.S.NRC
UNITED STATES NUCLEAR REGULATORY COMMISSION
Protecting People and the Environment

Conclusion

- On the basis of its review, the staff determines that the requirements of 10 CFR 54.29(a) have been met for the license renewal of Duane Arnold Energy Center

U.S.NRC

United States Nuclear Regulatory Commission

Protecting People and the Environment

U.S.NRC

UNITED STATES NUCLEAR REGULATORY COMMISSION

Protecting People and the Environment

Seismically Induced Indirect Piping Failures in 10 CFR 50.46a and DG-1216

Rob Tregoning
Nuclear Regulatory Commission

Advisory Committee for Reactor Safeguards Meeting
Rockville, Maryland
October 7, 2010

Presentation Objectives

- Technical basis associated with treatment of seismically induced indirect failures
- Existing requirements and guidance associated with seismically induced indirect failures
- Feedback received from ACRS Subcommittee on Regulatory Policies and Practices (9/22)
- Staff's response to feedback and proposed path forward

Indirect Piping Failures: Background

- Failure of a structure, support, or component (SSC) due to a seismic event which subsequently causes the failure of a reactor coolant system (RCS) pipe primary pressure boundary piping component
  - RCS piping system support failures
  - Excessive deformation or failure of in-line components (e.g., valves)
  - Failure of major components or their supports acting as anchor points
  - Failure of non-attached SSC which impacts the RCS piping

- Only RCS failures greater than TBS are a consideration for 10 CFR 50.46a
  - Smaller breaks regulated by existing 10 CFR 50.46 requirements
  - Ensure that these failure do not invalidate the technical basis supporting the transition break size (TBS) development

Indirect Piping Failures: Prior Study

- Lawrence Livermore Study (NUREG/CRs – 3660, 3663, 4290, 4792) findings and recommendations
  - Seismically induced support failure is the most likely cause of indirectly induced double-ended guillotine breaks
  - Strength of component supports, currently designed for the combination of SSE and DEGB loads, should not be reduced
- NUREG-1903 review of seismic PRAs, seismic safety margin research program, and IPEEE submittals confirmed LLNL recommendations
  - Valves, non-degraded piping, and pipe supports have a significantly higher capacity than other RCS components
  - Other RCS components
    - These components, especially component supports, are more vulnerable than the piping and pipe supports.
    - Most significant NSSS failure modes are attributable to failures of major components or their supports.

Indirect Piping Failures: Updated Estimates

- Subsequent efforts have used the original LLNL approach, updated for more recent understanding of plant-specific factors
- NUREG-1903
  - Analyzed large component support failures that may lead to piping failure (i.e., indirect piping failure) associated with rare seismic events
  - Two cases: Westinghouse rock site, CE soil site
  - Used NUREG-1488 hazard curves (1994)
  - Results: mean piping failure probability for both cases ≈ 10^{-6}/yr
- EPRI
  - Three cases: Westinghouse rock site, CE rock site, and GE soil site
  - Used updated seismic hazard curves developed for early site permits
  - Results: mean piping failure probabilities from 6×10^{-6}/yr - 10^{-8}/yr

Indirect Piping Failures: Existing Requirements

- Federal Register Notice (Vol. 74, No. 152, 8/10/09) for 10 CFR 50.46a
  - No requirements to demonstrate that the frequency of indirect failures greater than the TBS is acceptable
  - No generic changes allowed to seismic design, testing, analysis, qualification, and maintenance requirements (i.e., seismic design basis)
  - Justify any proposed changes by plant-specific analysis
- DG-1216, "Plant-specific applicability of Transition Break Size Specified in 10 CFR 50.46a" contains no guidance to demonstrate acceptable indirect failure frequencies
- Original basis for staff position
  - No basis for allowing generic changes in rule
    - NUREG-1903 evaluated one failure mode for two plants
    - EPRI considered the effect of updated seismicity estimates on three plants
  - Frequency of failures would remain less than TBS frequency (i.e., $< 10^{-5}$/yr) because original design basis retained

Indirect Piping Failures: ACRS Feedback

- Relaxation of mitigation requirements for breaks beyond the TBS could result in an unacceptable risk due to indirect failures, even if the frequency of these failures does not change
  - Possibility that indirect seismic failure frequency may be equal to or greater than direct seismic failure frequency
  - Limited studies show that highest frequency estimation approaches the frequency used to select the TBS (i.e., 10^{-5}/yr)

- Licensee should have to demonstrate that the frequency associated with seismically induced indirect RCS piping failures is acceptable
  - Consistent with treatment of seismically induced direct failures
  - Ensures that indirect failures are not a significant risk contributor

Indirect Piping Failures: Staff Response and Path Forward

- Staff agrees with ACRS feedback that indirect failures should be demonstrated to be insignificant risk contributors
  - Updated seismic hazard information (GI-199)
  - Smaller allowable risk increase in draft final rule (i.e., changed from “small” to “very small”)
- Path forward
  - Modified the FRN/rule language for the draft final rule
  - Add guidance in DG-1216 for seismically induced indirect piping failures
    - Initial ideas and concepts discussed during recent public meeting
    - Use pilot plant study to evaluate the acceptability of the planned guidance
  - Request that ACRS document recommendations in letter to Commission
    - Require 10 CFR 50.46a applicants to demonstrate that the frequency associated with seismically induced indirect RCS piping failures is acceptable
    - Request that staff provide guidance for conducting these demonstrations

U.S.NRC

UNITED STATES NUCLEAR REGULATORY COMMISSION

Protecting People and the Environment

Draft Final § 50.46a Rule

Risk-Informed ECCS Requirements

Staff Presentation to the Advisory Committee on Reactor Safeguards

Rockville, Maryland

October 7, 2010

Staff Presentation

- **Background** 5 min.
  Richard Dudley
- **Summary of § 50.46a rule concept** 10 min.
  Richard Dudley
- **Effects of indirect seismic failures** 25 min.
  Robert Tregoning
- **14 day outage time for > TBS mitigation** 20 min.
  Steve Dinsmore
- **Applying § 50.46a to new reactor designs** 20 min.
  Don Dube

§ 50.46a Rule Background

- Commission SRM (March 2003) directed staff to prepare proposed rule
- Additional Commission direction provided in July 2004 SRM
- Proposed rule published November 2005
- Industry commented that excessive rule burden would prevent implementation
- Two public meetings to discuss public comments and ways to reduce unnecessary burden
- Met with ACRS on draft final rule in Oct./Nov. 2006

§ 50.46a Rule Background

ACRS Nov. 16, 2006 Letter

- Rule to risk-inform § 50.46 should not be issued in its current form
  - Insufficient defense-in-depth for pipe breaks larger than the TBS
  - Concerns with risk-informed assessment process
  - Concerns with plant specific applicability of expert elicitation and seismic analysis

§ 50.46a Rule Background

Response to ACRS Letter

- Staff requested additional Commission guidance
- Commission SRM - August 2007
  - increase overall defense-in-depth for breaks >TBS
- After staff completed revisions to rule, OGC determined re-notice is necessary
- May 2009 – Staff briefed ACRS on changes made in supplemental proposed rule

§ 50.46a Rule Background

- Supplemental proposed rule published Aug. 2009
- Public comment period ended Jan. 2010
- Staff evaluated public comments and prepared draft final rule language
- Public meeting held on June 4, 2010
- Draft final rule *Federal Register* notice provided to ACRS August 30
- ACRS subcommittee meeting – Sept. 22

§ 50.46a Final Rule

Subcommittee Meeting Issues:

- Evaluation of seismically-induced indirect piping failures ……..Rob Tregoning
- 14 day outage time for > TBS mitigation …….. Steve Dinsmore
- Risk acceptance criteria for new reactors ……. Don Dube

§ 50.46a Rule Path Forward

Completion Schedule:

- ACRS full committee meeting …….. October 7, 2010
- Provide final rule package to EDO ……. November 29, 2010
- Provide final rule to Commission …….…… December 13, 2010

U.S.NRC

UNITED STATES NUCLEAR REGULATORY COMMISSION

Protecting People and the Environment

Summary of § 50.46a Rule Concept

§ 50.46a Final Rule Concept

- Alternative to existing ECCS req'ts (§ 50.46)
- LOCAs divided into 2 regions based on break frequency – transition break size (TBS)
- Requirements unchanged for 1st region (≤ TBS)
- In 2nd region (> TBS) LOCA mitigation requirements relaxed for lower frequency breaks
- Plant changes "enabled" by new requirements must be evaluated by a risk-informed process

§ 50.46a Final Rule Concept

ECCS Analysis Requirements

- Breaks ≤ TBS
  - No change from current § 50.46
- Breaks > TBS
  - No single failure assumption
  - Credit for offsite power
  - Credit for non-safety equipment
  - Alternative metrics for “coolable geometry” may be used if justified

§ 50.46a Final Rule Concept

- **Transition break size**
  - PWRs – largest attached pipe to the main coolant piping
  - BWRs – largest attached feedwater or residual heat removal line inside containment

§ 50.46a Final Rule Concept

Initial Conversion to § 50.46a

- Demonstrate applicability of elicitation report
- Demonstrate applicability of staff seismic study or provide a plant specific study (direct & indirect failures)
- Evaluation of leak detection capability
- If self-approval process is desired, describe risk informed process for evaluating future changes

§ 50.46a Final Rule Concept

Plant Changes Enabled by § 50.46a

- Proposed in initial application (and later)
- For enabled changes:
  - Re-analyze ECCS for 2 regions using NRC-approved methods
  - For any non-safety equipment that is credited in analysis of breaks >TBS:
    - List equipment in Tech Specs
    - Provide on-site power (manual connection OK)
  - Demonstrate by risk-informed analysis that risk-informed acceptance criteria are met

§ 50.46a Final Rule Concept

Risk-Informed Acceptance Criteria

- For changes submitted for NRC review
  - "very small" cumulative risk increase
- For self-approved changes
  - "minimal" risk increase
  - § 50.59 is satisfied
- For all changes:
  - defense-in-depth
  - safety margins
  - monitoring program
- For certified designs:
  - No significant decrease in level of safety

§ 50.46a Final Rule Concept

Operational Requirements

- All future plant changes (enabled/not) must be reviewed to ensure continued applicability of 2 TBS studies
- Sufficiently sensitive leak detection capability must be maintained for piping larger than TBS
- Operation is limited to short time (≤14 days/12 mo. or NRC approved alt.) if breaks > TBS not shown to meet acceptance criteria
- PRA methods must be of sufficient scope and quality
- Periodically confirm ≤ “very small” cumulative risk increase via PRA update

U.S.NRC
UNITED STATES NUCLEAR REGULATORY COMMISSION
Protecting People and the Environment

Effects of Indirect Seismic Failures

(See slides in separate package)

U.S.NRC

UNITED STATES NUCLEAR REGULATORY COMMISSION

Protecting People and the Environment

Allowable Out-of-Service Time (14 days) for Equipment Credited in LBLOCA Analysis

Stephen Dinsmore 415-8482

ACRS Meeting

October 7, 2010

Probabilistic Risk Analyses

Overview of Requirement History

- Commission direction indicated that the rule:
  - should include requirements for licensees to maintain capability to mitigate the full spectrum of LOCAs
  - capabilities for beyond design-basis events should be controlled by NRC requirements commensurate with the safety significance of these capabilities

- Initial published rule had "no operation in unanalyzed condition" but this has proven to be undesirable (e.g., need to reduce power if LPSI pump becomes unavailable) and not necessarily commensurate with safety significance

Probabilistic Risk Analyses

Overview of Requirement History (cont.)

- Current Tech Specs and risk-informed operational controls (MRule and TS initiatives) deal with degraded functions, not loss of function.
- TS initiative 6 does deal with loss of function but differs from current controls and not yet fully implemented
- Rule modified to add flexibility and reflect near-term risk-informed method advances
- Current proposed rule provides:
  - a fixed time (to provide a fully vetted acceptable alternative) or
  - an alternative proposed by the licensee and approved by the staff (to provide flexibility)

Probabilistic Risk Analyses

Development of 14 days/year

- RG 1.177, “An Approach for Plant-Specific, Risk-Informed Decisionmaking: Technical Specifications “
  - Acceptance guideline integral conditional core damage probability $\leq 5 \times 10^{-7}$ integral conditional large early release frequency $\leq 5 \times 10^{-8}$
  - Assume LOCA leads to core damage (and large LOCA, low pressure core damage places little stress on containment)
  - Use LOCA frequency of 10^{-5}/year frequency with no mitigation
  - Yields allowed AOT of 18 days

- SRP Chapter 2.2.1 and 2.2.2 identifying external events that need to be design basis events (that need to be mitigated)
  - External events with a frequency $< 10^{-7}$/year need not be design basis events
  - Assume LOCA leads to core damage (and large LOCA, low pressure core damage places little stress on containment)
  - Use LOCA frequency of 10^{-5}/year with no mitigation
  - Yields allowed outage time of 3.6 days

- 14 days is
  - In between 4 days and 18 days
  - A “fairly long” AOT that industry indicated that it would normally be sufficient

Probabilistic Risk Analyses

PWR Risk-informed intervals

- Assuming LOCA frequency of 10^{-5}/year leads to core damage frequency from full utilization of this 14 days of 3.8×10^{-7}/year
- Assume LOCA arithmetic mean frequency of 5×10^{-6}/year reduces risk (increases AOT) by factor of 2
- Assume LOCA geometric mean frequency of 10^{-6}/year reduces risk (increase AOT) by factor of 10
- If unanalyzed condition LOCA > TBS (12 inches), may be possible to use frequency of larger breaks

U.S.NRC
UNITED STATES NUCLEAR REGULATORY COMMISSION
Protecting People and the Environment

Application of Risk Acceptance Criteria to New Reactors

Don Dube
NRO/DSRA

Subcommittee Concerns

Application of Risk Acceptance Criteria to New Reactors

- August 10, 2009 FRN:
  - Staff in early stages of addressing “risk metrics” for new reactors
  - NRC requested comments on:
    - Use of large release frequency (LRF) vs. LERF
    - “Very small” and “minimal” one decade lower for new reactors
- Discussions on “modifying risk-informed regulatory guidance” for new reactors ongoing
- Awaiting Commission decision on SECY-10-0121

Subcommittee Concerns

New Reactors (cont.)

- Staff agrees with external stakeholder comments that it is premature to address risk metrics of CDF and LRF/LERF pending Commission direction on SECY-10-0121
- The following was added to SOC and rule to be consistent with Option 2 of SECY-10-0121: “Applicants referencing a certified design may need to supplement these criteria to also meet the requirement that implementing the proposed changes will not result in a significant decrease in the level of safety otherwise provided by the certified design.”

Subcommittee Concerns

New Reactors (cont.)

- If, as a result of Commission direction, different guidance is promulgated that describes new metrics to be used for new reactors, appropriate changes will be made to § 50.46a.