ANALYZE FOR **SAFETY, ECOLOGY AND MINIMUM ESSENTIAL DESIGN**

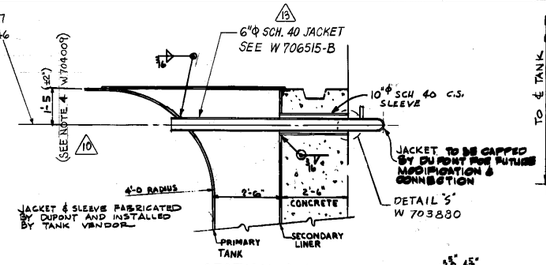

SECTION A-A
SCALE: 1/2" = 1'-0"

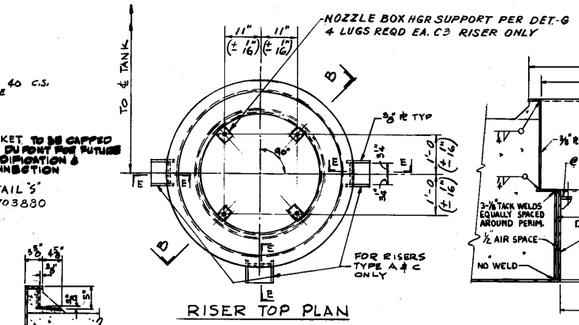

RISER TOP PLAN

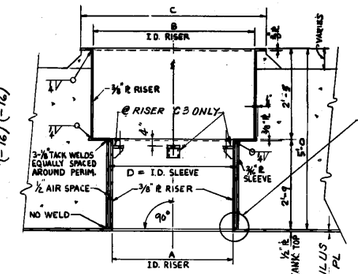

SECTION B-B

TYPICAL RISER PLATE DETAILS
NO SCALE, SEE SCHEDULE BELOW

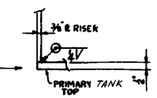

DETAIL A

APPLY INSULATION PER SPEC. 7088.

SECTION H—H
INSULATION FURNISHED & INSTALLED BY DUPONT. (TYP)
3" = 1'-0

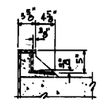

SECTION E-E
SCALE 1" = 1'-0

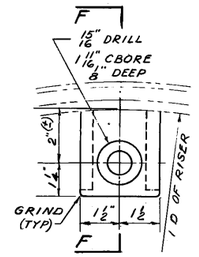

DETAIL G-LUG
SEE RISER TOP PLAN
HALF SIZE

NOTE - TO BE FABRICATED & INSTALLED BY DUPONT CONST AFTER CONC TOP SLAB HAS BEEN POURED

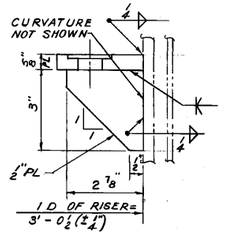

SECTION F—F
HALF SIZE

RISER & SLEEVE SCHEDULE					
TYPE	DESIGNATION	A	B	C	D
A	INSTRUMENT AND PERISCOPE RISERS	2'-6 1/2"	3'-6 3/8"	4'-2"	NO SLEEVE
B	ACCESS RISERS	3'-0 1/2"	4'-0 3/8"	4'-8"	3'-2 1/4"
C1 & C2	C1-SUPERNATE INLET-JET OUT. C2-CONCENTRATE OUTLET	3'-0 1/2"	4'-0 3/8"	4'-8"	3'-2 1/4"
D	THERMOWELL RISER	0'-9 3/4"	1'-8 3/4"	2'-4"	0'-11"
E1 & E2	INSTRUMENT OR LIQUID LEVEL RISERS-E2	2'-0 1/2"	3'-0 3/8"	3'-8"	2'-2 1/4"
F	ANNULUS JET RISER	SEE DETAIL "E"			
G & H	CONSTRUCTION ACCESS RISER	4'-6 1/2	5'-4 1/4	5'-11 3/4	4'-6 3/4
J	DEMISTER RISER	SEE DETAIL "B"			
K	H&V. INLET DUCT	SEE DETAIL "C"			
L	H&V EXHAUST RISER	SEE DETAIL "D"			
P	PERISCOPE RISER	SEE DETAIL "F"			
V	PUMP RISER W/ 3 1/4" TW INSERT PLUG	3'-0 1/2"	4'-0 3/4"	4'-8"	3'-2 1/4"
C3	BOTTOMS LINE RISER	3'-0 1/2"	4'-0 3/8"	4'-8	3'-2 1/4"

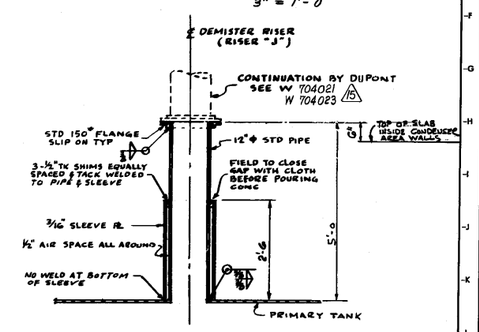

DETAIL "B"
3/4" = 1'-0
FOR RISER - J

TOLERANCE ON DIMENSIONS A, B, C, & D (± 1/4")

FOR LOCATION AND ORIENTATION SEE
TANK #44 - W703657
TANK #45 - W703658
TANK #46 - W703659
TANK #47 - W703660

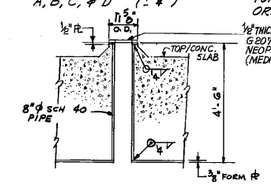

DETAIL "F"
1/2" = 1'-0
FOR RISER - P

1/2" THICK X 3" WIDE RUBATEX G-207-N CLOSED CELL NEOPRENE GASKET (MEDIUM DENSITY)

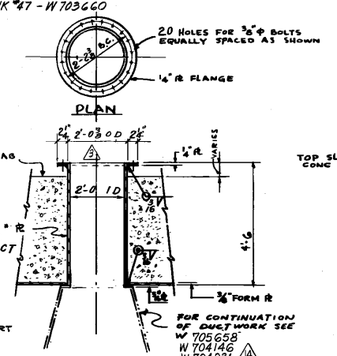

DETAIL "C"
1/2" = 1'-0
FOR RISER - K

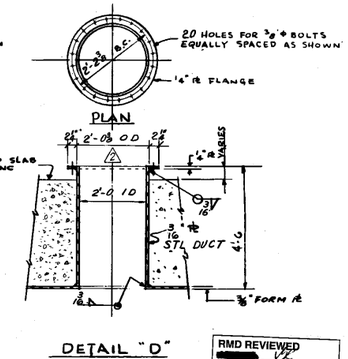

DETAIL "D"
NTS
FOR RISER - L

RMD REVIEWED
DATE 5-17-93

THIS DWG. SUPERSEDES BID DWG. W700326 B. REV. 1 TO 3. SHOW DESIGN CHANGES MADE FROM BIDDING TO I.C.R. ISSUE OF THIS DRAWING.

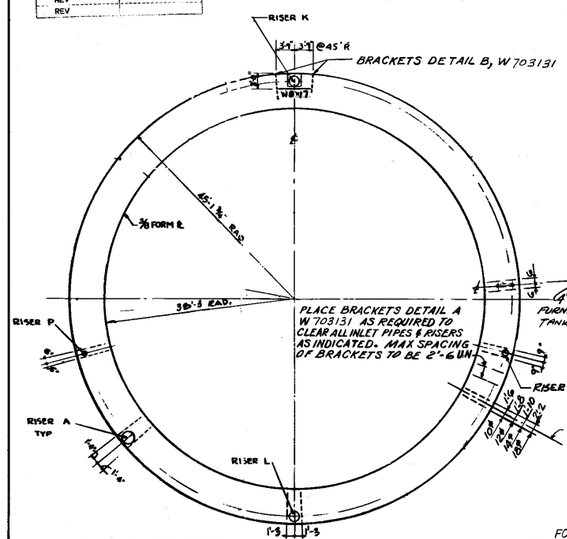

LAYOUT OF 3/16" FORM PLATE ATOP THE ANNULUS SPACE
SCALE: 3/32" = 1'-0"

FOR ORIENTATION AND LOCATION OF SLEEVES, RISERS & THERMOCOUPLE PIPES SEE -
TANK #44 - W703657
TANK #45 - W703658
TANK #46 - W703659
TANK #47 - W703660

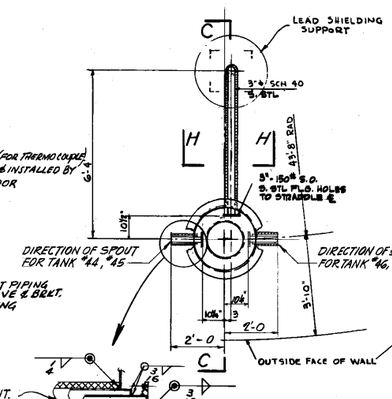

FOR CONT. SEE PROCESS DWG
W704314 TK. #44
W704341 TK. #45
W704569 TK. #46
W704992 TK. #47

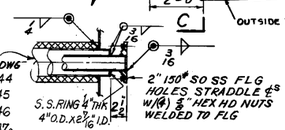

DETAIL-E
1/2" = 1'-0
FOR RISER-F

1/2" THICK X 3" WIDE RUBATEX G-207-N CLOSED CELL NEOPRENE GASKET (MEDIUM DENSITY)

WELD NUTS TO F.S. OF FLG - TYP

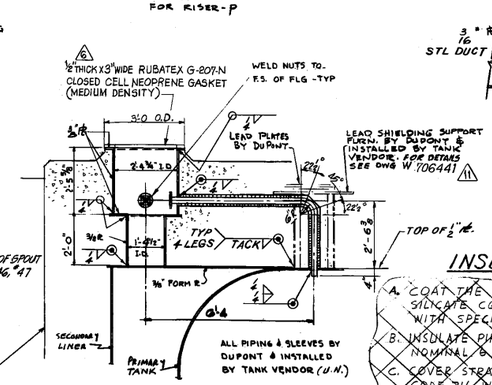

LEAD SHIELDING SUPPORT FURN. BY DUPONT & INSTALLED BY TANK VENDOR. FOR DETAILS SEE DWG W 706441

SECTION C-C

FOR LOCATION AND ORIENTATION SEE
TANK #44 - W703657
TANK #45 - W703658
TANK #46 - W703659
TANK #47 - W703660

INSULATION NOTES

A. COAT THE STAINLESS STEEL PIPE WITH SODIUM SILICATE CODE 802.1, APPLIED IN ACCORDANCE WITH SPECIFICATION SN 102.10, PARAGRAPH 6.3.

B. INSULATE PIPE W/ 1" THICK GLASS FIBER CORE IND. NOMINAL 6 LB. PER CU. FT. DENSITY.

C. COVER STRAIGHT RUNS WITH ALUMINUM JACKET, CODE 716 WITH JOINT ON BOTTOM.

D. COVER ELBOWS WITH TWO-PIECE ALUMINUM ELL COVERS CODE 716.3, OR MITERED ALUMINUM.

E. APPLY FIBRATED ASPHALT CUTBACK CODE 709 AS FOLLOWS: - SEAL LAPS AND JOINTS ON ALUMINUM JACKET. - SEAL EXPOSED ENDS OF INSULATION AND ALUMINUM JACKET.

Reproduced From W700858

THIS DOCUMENT CONTAINS INFORMATION RELATING TO ACTIVITIES OF THE ENERGY RESEARCH AND DEVELOPMENT ADMINISTRATION. NOT TO BE REPRODUCED OR RELEASED WITHOUT PRIOR APPROVAL.

BLDG.	PROJ.	DA	DWG. TYPE		LATEST
241-54F	951747	11	45	W704010	15 REVISION

SAVANNAH RIVER PLANT
BLDG. 241-54F TANK 44, 45, 46, 47
ADDITIONAL WASTE STORAGE TANKS
LINER PLATE ATTACHMENTS SH#2
STEEL

ENGINEERING DOC. CONTROL - SRS
00173214

INFORMATION ON THIS DWG. HAS BEEN INCORPORATED ON MODEL

ISSUED & REVS	VERIFIED BY/DATE
IOR	
FINAL	
REV 1 - 15	
REV	
REV	
REV	
REV	
REV	
REV	

THE PHOTOGRAPHIC LINES ON THIS TRACING MAY BE REMOVED WITH A WET ERASER

PROJ. NO	REVISIONS	REVISED BY DATE	CHECKED BY DATE	APPROVED BY DATE	PROJ. NO	REVISIONS	REVISED BY DATE	CHECKED BY DATE	APPROVED BY DATE	PROJ. NO	REVISIONS	REVISED BY DATE	CHECKED BY DATE	APPROVED BY DATE	PROJ. NO	REVISIONS	REVISED BY DATE	CHECKED BY DATE	APPROVED BY DATE	PROJ. NO	REVISIONS	REVISED BY DATE	CHECKED BY DATE	APPROVED BY DATE	REFERENCE STANDARDS
															951747	9 ADDED REFER. DWG. NO.	5-WEBB 5-WEBB	5-WEBB 5-WEBB	5-WEBB 5-WEBB	951747	1 REV. RISER & SLEEVE SCHED.	5-WEBB 5-WEBB	5-WEBB 5-WEBB	5-WEBB 5-WEBB	SN 100 M
																				951747	2 2'-0 3/4 WAS 2'-4				SN 700 M
																				951747	3 DELETE INSULATION NOTES				SN 800 M
																					4 REVISE INSULATION NOTE	5-WEBB 5-WEBB	5-WEBB 5-WEBB	5-WEBB 5-WEBB	SN 102.10
																					5 ADD GASKET NOTES.				SPE. 7088
																					6 ADD REF. STANDARDS				
																				951747	7 ADD ELEVATIONS	5-WEBB 5-WEBB	5-WEBB 5-WEBB	5-WEBB 5-WEBB	
																				951747	8 ADD TOLERANCE & NOTE REFER				
9					10					12					13					6	1	7	11	3	4 14 8	2 15 5

REFERENCE DRAWINGS			
W705657	REF. TANK #44 REV. TO. 44 REV. TO. 45 REV. TO. 46 REV. TO. 47		
W705658			
W705659			
W705660			
W703613 D	SEAL DETAIL SEAL DETAIL		

THIS DRAWING HAS BEEN FURNISHED BY E. I. DU PONT DE NEMOURS & CO. THE INFORMATION AND KNOW-HOW THEREON MAY NOT BE USED NOR THE DRAWING REPRODUCED WITHOUT THE WRITTEN PERMISSION OF DU PONT. ALL REPRODUCTIONS IN WHOLE OR IN PART, INCLUDING VENDOR'S SHOP DRAWINGS, SHALL BEAR OR REFER TO THIS STAMP.

PROJECT 95-17-47
SCALE AS NOTED
DRAWN G. REITZ
CHECKED HARZEKA
APPROVED-INITIAL CONSTR. RELEASE
APPROVED-FINAL

E. I. DU PONT DE NEMOURS & COMPANY
WILMINGTON, DELAWARE
ENGINEERING DEPARTMENT
W704010

W704010