GEH Report NEDO-33506, "Hope Creek Generating Station Operation With Final Feedwater Temperature Reduction and Feedwater Heaters Out-Of-Service," dated September 2010

Non Proprietary Information

HITACHI

GE Hitachi Nuclear Energy

NEDO-33506

Revision 0

Class I

0000-0101-3314 R8

September 2010

HOPE CREEK GENERATING STATION
OPERATION WITH FINAL FEEDWATER TEMPERATURE REDUCTION AND FEEDWATER HEATERS OUT-OF-SERVICE

INFORMATION NOTICE

This is a non-proprietary version of NEDC-33506P, Revision 0, from which the proprietary information has been removed. Portions of the enclosure that have been removed are indicated by an open and closed bracket as shown here [[ ]].

IMPORTANT NOTICE REGARDING CONTENTS OF THIS REPORT

Please Read Carefully

The only undertakings of GEH with respect to information in this document are contained in the contract between PSEG Power LLC and GEH, Purchase Order No. 4500509398, effective March 2009, and nothing contained in this document shall be construed as changing the contract. The use of this information by anyone other than PSEG, and for any purposes other than those for which it is intended is not authorized and, with respect to any unauthorized use, GEH makes no representation or warranty, and assumes no liability as to the completeness, accuracy, or usefulness of the information contained in this document.

No use of or right to copy any of this information contained in this document, other than by the NRC and its contractors in support of GEH's application, is authorized except by contract with GEH, as noted above. The information provided in this document is part of and dependent upon a larger set of knowledge, technology, and intellectual property rights pertaining to the FWTR evaluation. Without access and a GEH grant of rights to that larger set of knowledge, technology, and intellectual property rights, this document is not practically or rightfully usable by others, except by the NRC or through contractual agreements with PSEG Power LLC, as set forth in the previous paragraph.

TABLE OF CONTENTS

Executive Summary ..... **vi**
1.0 Introduction **1-1**
1.1 Summary and Conclusions 1-1
1.2 Operating Conditions 1-2
1.3 Computer Codes 1-2
2.0 ECCS Performance Analysis **2-1**
2.1 Analysis Approach 2-1
2.2 Evaluation 2-1
2.3 Conclusion 2-2
3.0 Containment System Response **3-1**
3.1 Introduction 3-1
3.2 Analysis Approach 3-1
3.3 Analysis Results 3-2
3.4 Conclusion 3-3
4.0 Reactor Asymmetric Loads **4-1**
4.1 Line Break Analysis 4-1
4.2 Jet Impingement, Jet Reaction, and Pipe Whip Loads 4-3
5.0 Reactor Coolant and Connected Systems **5-1**
5.1 Reactor Internal Pressure Differences 5-1
5.2 Acoustic and Flow-Induced Loads 5-1
5.3 Reactor Internals Structural Integrity 5-2
5.4 Reactor Coolant Pressure Boundary Piping 5-6
6.0 Other Related Technical Issues **6-1**
6.1 AOO Performance 6-1
6.2 ATWS Mitigation Capability 6-1
6.3 Thermal-Hydraulic Stability 6-2
6.4 High Energy Line Break 6-3
6.5 Feedwater Nozzle Fatigue 6-4
6.6 Reactor Heat Balance for P-bypass Setpoint Assessment 6-6
6.7 GE14i Isotope Test Assemblies 6-6
7.0 References **7-1**

List of Tables

Table	Title	Page
Table 1-1	Summary of Analyses Presented in this Report	1-3
Table 1-2	Reactor Heat Balance for NFWT and RFWT Conditions	1-4
Table 1-3	Computer Codes Used in the FWTR Evaluations	1-5
Table 2-1	DBA LOCA Initial Conditions for HCGS FWTR	2-3
Table 2-2	SAFER/GESTR-LOCA Results Summary for the Limiting Recirculation Line Break	2-3
Table 5-1	Summary of RIPD Results (Faulted Conditions)	5-7
Table 5-2	Minimum Fuel Lift Margin Analysis Results	5-8
Table 5-3	Maximum CRGT Lift Forces	5-8
Table 5-4	Summary of Baseline Flow-Induced Loads Results	5-8
Table 5-5	Summary of Flow-Induced Load Multipliers	5-9
Table 5-6	Summary of Acoustic Loads Results	5-9
Table 6-1	Reactor Heat Balance Results for P-bypass Setpoint Assessment	6-8

List of Figures

Figure	Title	Page
Figure 1-1	Reactor Normal Feedwater Temperature (431.6°F) 3,840 MWt and 100% Flow Heat Balance	1-7
Figure 1-2	Reactor Feedwater Temperature Reduction (329.6°F) 3,840 MWt and 100% Flow Heat Balance	1-8
Figure 6-1	Demonstration of Hope Creek BSP Regions for FFWTR (329.6°F Feedwater Temperature)	6-9
Figure 6-2	Demonstration of Hope Creek BSP Regions for FWHOOS (371.6°F Feedwater Temperature)	6-10

EXECUTIVE SUMMARY

This report summarizes the analysis results to support the operation of Hope Creek Generating Station (HCGS) with Final Feedwater Temperature Reduction (FFWTR) and Feedwater Heaters Out-of-Service (FWHOOS). The safety and regulatory concerns addressed in this report include the Emergency Core Cooling System (ECCS) performance analysis for a Loss-of-Coolant Accident (LOCA), containment system response, reactor asymmetric loads, reactor coolant and connected systems, Anticipated Operational Occurrences (AOOs) performance, Anticipated Transient Without Scram (ATWS) mitigation capability, thermal-hydraulic stability, high energy line break (HELB), feedwater nozzle fatigue, and the P-bypass setpoint.

ACRONYMS

Term	Definition
AOO	Anticipated Operational Occurrence
AP	Annulus Pressurization
ARS	Amplified Response Spectra
ARTS	Average Power Range Monitor, Rod Block Monitor, and Technical Specification Improvement Program
ASME	American Society of Mechanical Engineers
ATWS	Anticipated Transient Without Scram
BSP	Backup Stability Protection
BSW	Biological Shield Wall
CLTP	Current Licensed Thermal Power
CO	Condensation Oscillation
ΔCPR	Change in Critical Power Ratio
CRD	Control Rod Drive
CRDH	Control Rod Drive Housing
CRGT	Control Rod Guide Tube
DBA	Design Basis Accident
DIVOM	Delta CPR over Initial MCPR Versus the Oscillation Magnitude
DP	Differential Pressure
ECCS	Emergency Core Cooling System
EOC	End-of-Cycle
EPU	Extended Power Uprate
FFWTR	Final Feedwater Temperature Reduction
FLE	Fuel Loading Error
FWCF	Feedwater Controller Failure – Increasing Flow
FWHOOS	Feedwater Heaters Out-of-Service

Term	Definition
FWLB	Feedwater Line Break
FWTR	Feedwater Temperature Reduction (Includes both FFWTR/FWHOOS)
GEH	GE Hitachi Nuclear Energy Americas LLC
HELB	High Energy Line Break
HCGS	Hope Creek Generating Station
HPCI	High Pressure Coolant Injection
IBA	Intermediate Break Accident
ICF	Increased Core Flow
JI	Jet Impingement
JR	Jet Reaction
LFWH	Loss of Feedwater Heating
LOCA	Loss-of-Coolant Accident
LOOP	Loss of Offsite Power
LPCI	Low Pressure Coolant Injection
LPRM	Local Power Range Monitor
LRNBP	Load Rejection with No Bypass
MCPR	Minimum Critical Power Ratio
MELLLA	Maximum Extended Load Line Limit Analysis
MSIVF	Main Steam Isolation Valve Closure with Flux Scram
MSLB	Main Steam Line Break
NFWT	Normal Feedwater Temperature
NRC	Nuclear Regulatory Commission
OFS	Orificed Fuel Support
OLMCPR	Operating Limit Minimum Critical Power Ratio
OPRM	Oscillation Power Range Monitor
PBDA	Period Based Detection Algorithm

Term	Definition
PCT	Peak Cladding Temperature
PDA	Pipe Dynamic Analysis
P/F	Power/Flow
PLEX	Plant Life Extension
PW	Pipe Whip
PWR	Pipe Whip Restraint
RCIC	Reactor Core Isolation Cooling
RCPB	Reactor Coolant Pressure Boundary
RFWT	Reduced Feedwater Temperature
RIPD	Reactor Internal Pressure Difference
RPV	Reactor Pressure Vessel
RSLB	Recirculation Suction Line Break
RWCU	Reactor Water Cleanup
RWE	Rod Withdrawal Error
SBA	Small Break Accident
SER	Safety Evaluation Report
SHB	Shroud Head Bolts
SLMCPR	Safety Limit Minimum Critical Power Ratio
SP	Suppression Pool
SRV	Safety Relief Valve
SSE	Safe Shutdown Earthquake
TFSP	Turbine First Stage Pressure
TTNBP	Turbine Trip with No Bypass
UFSAR	Updated Final Safety Analysis Report

1.0 INTRODUCTION

Final Feedwater Temperature Reduction (FFWTR) is implemented at the end-of-cycle (EOC) to increase generator output and feedwater temperature reduction is limited to 102°F. Feedwater Heaters Out-of-Service (FWHOOS) is a plant operating flexibility option allowing continued operation with less than the full feedwater system heating capacity available during the operating cycle and feedwater temperature reduction is limited to 60°F. The objective of this report is to present the Hope Creek Generating Station (HCGS) results to support operation with FFWTR and FWHOOS. The FFWTR evaluations, contained herein, bound FWHOOS. This report will refer to feedwater temperature reduction (FWTR), which encompasses both FFWTR and FWHOOS. Evaluations that apply specifically to FFWTR or FWHOOS will be explicitly stated in this report.

This evaluation supports plant operation with a reduced feedwater temperature (RFWT) up to 102°F. The 102°F temperature reduction corresponds to a decrease from 431.6°F to 329.6°F.

Addressed in this evaluation is the effect of FWTR on the following subjects:

- Emergency Core Cooling System (ECCS) Performance Analysis
- Containment System Response
- Reactor Asymmetric Loads
- Reactor Coolant and Connected Systems
- Anticipated Operational Occurrence (AOO) Performance
- Anticipated Transient Without Scram (ATWS) Mitigation Capability
- Thermal-Hydraulic Stability
- High Energy Line Break (HELB)
- Feedwater Nozzle Fatigue
- P-bypass Setpoint

1.1 SUMMARY AND CONCLUSIONS

The effect of FWTR on the subjects noted above has been evaluated and determined as acceptable. The summary of analyses for each subject is provided in Table 1-1.

Based upon demonstration analyses performed to assess acceptable thermal hydraulic stability performance, the HCGS Option III oscillation power range monitor (OPRM) trip-enabled region flow boundary would need to be increased from 60% to 70% rated core flow to encompass the region calculated to be susceptible to instability for the maximum allowable RFWT of 102°F. No increase would be required for a RFWT of 60°F. The adequacy of the Option III OPRM trip-enabled region will be assessed for each reload cycle.

Also, HCGS evaluated the existing low power scram bypass setpoint, based on turbine first stage pressure (TFSP) and the calculated change in steam flow. At the RFWT, HCGS concluded that

the reactor scram bypass setting for TFSP was not sufficiently conservative, therefore a new setpoint has been provided in Section 6.6.

The FWTR evaluations noted above are applicable to GE14 and GE14i fuel as described in Section 6.7.

1.2 OPERATING CONDITIONS

1.2.1 Reactor Heat Balance

Table 1-2 summarizes heat balance conditions for normal feedwater temperature (NFWT) and RFWT conditions associated with FFWTR.

Figure 1-1 provides the heat balance condition for 431.6°F NFWT. Figure 1-2 indicates the heat balance conditions for 329.6°F RFWT.

1.3 COMPUTER CODES

Nuclear Regulatory Commission (NRC)-approved or industry-accepted computer codes are used in the HCGS FWTR evaluations. The primary computer codes used for HCGS FWTR evaluations are listed in Table 1-3. Exceptions to the use of the code or special conditions of the applicable safety evaluation report (SER) are included as notes to Table 1-3.

Table 1-1
Summary of Analyses Presented in this Report

Subject	Section	Result
ECCS Performance Analysis	2.0	Acceptable
Containment System Response	3.0	Acceptable
Reactor Asymmetric Loads	4.0	Acceptable
Reactor Coolant and Connected Systems	5.0	Acceptable[1]
AOO Performance	6.1	Acceptable
ATWS Mitigation Capability	6.2	Acceptable
Thermal-Hydraulic Stability	6.3	Acceptable[2]
HELB	6.4	Acceptable
Feedwater Nozzle Fatigue	6.5	Acceptable
P-bypass Setpoint	6.6	Change in TFSP Scram Bypass is Required

Notes:

1. Fuel lift margin for FWTR project is bounded by the fuel lift margin for the Extended Power Uprate (EPU) project (Reference 1).
2. Based upon demonstration analyses performed to assess acceptable thermal hydraulic stability performance, the HCGS Option III OPRM trip-enabled region flow boundary would need to be increased from 60% to 70% rated core flow to encompass the region calculated to be susceptible to instability for the maximum allowable RFWT of 102°F. No increase would be required for a RFWT of 60°F. The adequacy of the Option III OPRM trip-enabled region will be assessed for each reload cycle.

Table 1-2
Reactor Heat Balance for NFWT and RFWT Conditions

Parameter	Unit	NFWT	RFWT (-102° F)
Thermal Power	MWt / %Rated	3,840.0 / 100.0	3,840.0 / 100.0
Core Flow	Mlbm/hr / %Rated	100.0 / 100.0	100.0 / 100.0
Core Inlet Enthalpy	Btu/lbm	525.1	509.3
Feedwater Temperature	°F	431.6	329.6
Dome Pressure	psia	1,020.0	999.0
Vessel Steam Flow	Mlbm/hr	16.773	14.722

Table 1-3
Computer Codes Used in the FWTR Evaluations

Task	Computer Code	Version or Revision	NRC Approved	Comments
Reactor Heat Balance	ISCOR	09	Y(1)	NEDE-24011-P Rev.0 SER
ECCS-Loss-of-Coolant Accident (LOCA)	LAMB SAFER ISCOR TASC	08 04 09 03	Y Y Y(1) Y	NEDE-20566P-A (4) (5) (6) NEDE-24011-P Rev.0 SER NEDC-32084P-A Rev.2
Containment System Response	M3CPT LAMB	05 08	Y (3)	NEDO-10320, April 1971 (NUREG-0661) NEDE-20566P-A, September 1986
Annulus Pressurization (AP) Loads	ISCOR LAMB GEAPL SAP4G SPECA	09 08 01 07V 04V	Y(1) (3) N(7) N(7) N(7)	NEDE-24011-P, Rev.0 SER NEDE-20566P-A NEDE-25199, October 1979 NEDO-10909, Rev.7, December 1979 NEDE-25181, Addendum 1, August 1996
Reactor Internal Pressure Differences (RIPDs)	ISCOR	09	Y(1)	NEDE-24011-P Rev. 0 SER
Transient Analysis	PANAC ODYN	11 10	Y Y	NEDE-30130-P-A (2) NEDE-24154P-A
Thermal-Hydraulic Stability	ISCOR PANAC ODYSY	09 11 05	Y(1) Y Y	NEDE-24011-P Rev.0 SER NEDE-30130-P-A (8) NEDE-33213P-A

* The application of these codes to the analyses complies with the limitations, restrictions, and conditions specified in the approving NRC SER where applicable for each code.

(1) The ISCOR code is not approved by name. However, the SER supporting approval of NEDE-24011-P Rev. 0 by the May 12, 1978 letter from D. G. Eisenhut (NRC) to R. Gridley (GE) finds the models and methods acceptable, and discusses the use of a digital computer code. The referenced digital computer code is ISCOR. The use of ISCOR to provide core thermal-hydraulic information in reactor internal pressure differences, Transient, ATWS, Stability, Reactor Core and Fuel Performance, and LOCA applications is consistent with the approved models and methods.

(2) The physics code PANACEA provides inputs to the transient code ODYN. The improvements to PANACEA that were documented in NEDE-30130P-A were incorporated into ODYN by way of Amendment 11 of GESTAR II

(NEDE-24011P-A). The use of PANAC Version 11 in this application was initiated following approval of Amendment 26 of GESTAR II by letter from S.A. Richards (NRC) to G.A. Watford (GE) Subject: "Amendment 26 to GE Licensing Topical Report NEDE-24011-P-A, GESTAR II Implementing Improved GE Steady-State Methods," (TAC NO. MA6481), November 10, 1999.

(3) The LAMB code is approved for use in ECCS-LOCA applications (NEDE-20566P-A), but no approving SER exists for the use of LAMB for the evaluation of reactor internal pressure differences or containment system response. The use of LAMB for these applications is consistent with the model description of NEDE-20566-P-A.

(4) "SAFER Model for Evaluation of Loss-of-Coolant Accidents for Jet Pump and Non-Jet Pump Plants," NEDE-30996P-A, General Electric Company, October 1987.

(5) "Compilation of Improvements to GENE's SAFER ECCS-LOCA Evaluation Model," NEDC-32950P, January 2000.

(6) Letter, S. A. Richards (NRC) to J. F. Klapproth (GE), "General Electric Nuclear Energy Topical Reports NEDC-32950P and NEDC-32084P Acceptability Review," May 24, 2000.

(7) Not a safety analysis code that requires NRC approval. The code application is reviewed and approved by GEH for "Level-2" application and is part of GEH's standard design process. Also, the application of this code has been used in power uprate submittals.

(8) The use of TGBLA Version 06 and PANACEA Version 11 was initiated following approval of Amendment 26 of GESTAR II by letter from S.A. Richards (NRC) to G.A. Watford (GE) Subject: "Amendment 26 to GE Licensing Topical Report NEDE-24011-P-A, GESTAR II Implementing Improved GE Steady-State Methods," (TAC NO. MA6481), November 10, 1999.

Figure 1-1
Reactor Normal Feedwater Temperature (431.6°F)
3,840 MWt and 100% Flow Heat Balance

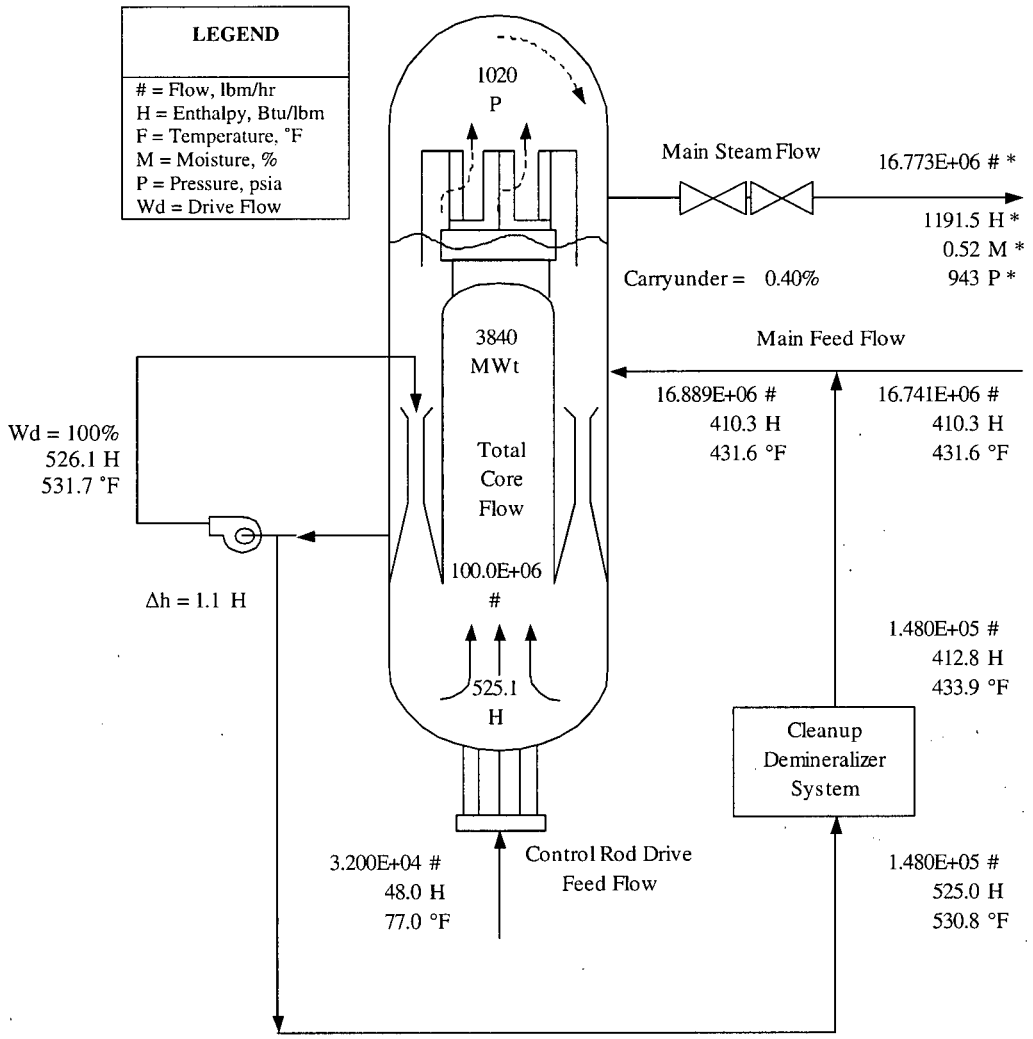

*Conditions at upstream side of TSV

Core Thermal Power	3840.0
Pump Heating	10.7
Cleanup Losses	-4.9
Other System Losses	-1.9
Turbine Cycle Use	3843.9 MWt

Figure 1-2
Reactor Feedwater Temperature Reduction (329.6°F)
3,840 MWt and 100% Flow Heat Balance

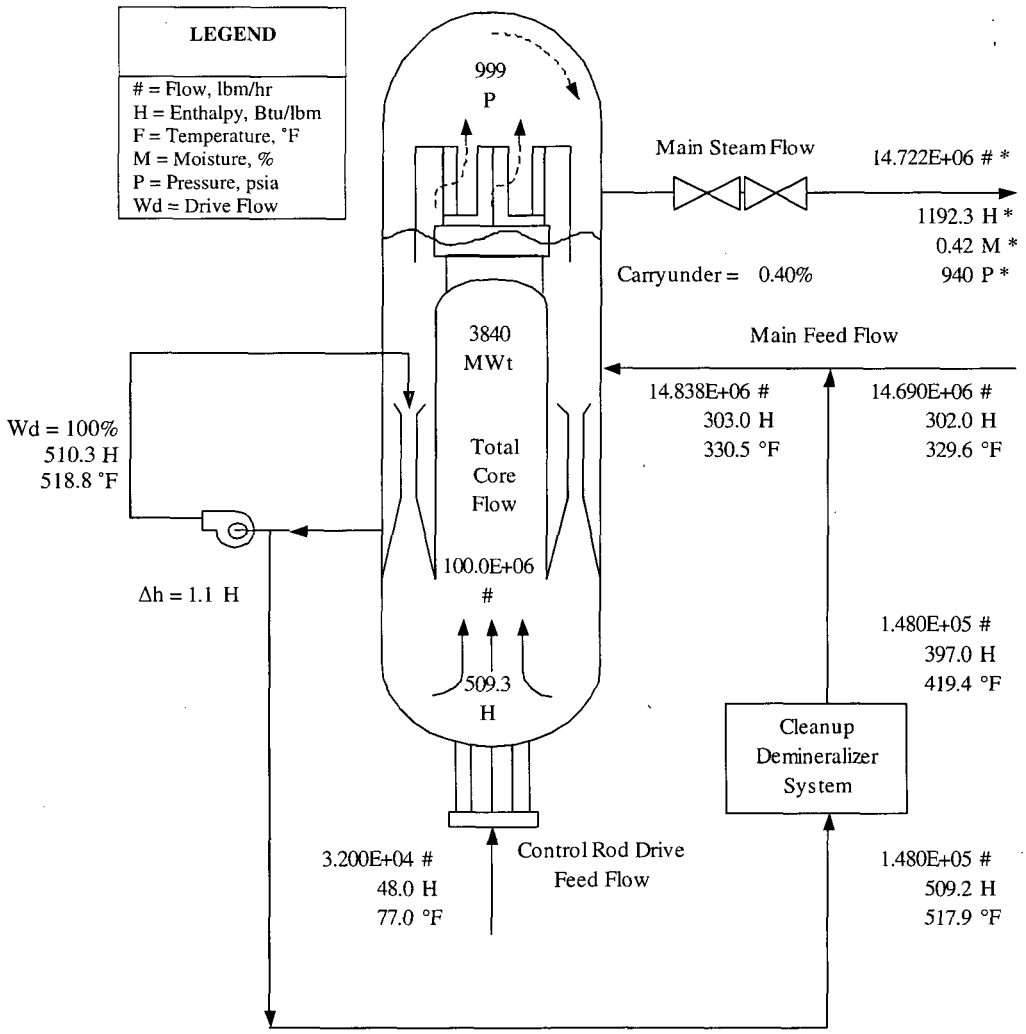

*Conditions at upstream side of TSV

Core Thermal Power	3840.0
Pump Heating	10.7
Cleanup Losses	-4.9
Other System Losses	-1.9
Turbine Cycle Use	3843.9 MWt

2.0 ECCS PERFORMANCE ANALYSIS

2.1 ANALYSIS APPROACH

The effect of FWTR of up to 102°F (from a rated feedwater temperature of 431.6°F) on the ECCS performance for the limiting break failure combination was evaluated using the NRC-approved SAFER/GESTR-LOCA methodology documented in Reference 2. The limiting break and failure combination for HCGS is the design basis accident (DBA) of the recirculation suction line break (RSLB) with battery single failure indicated in Reference 3. The peak cladding temperature (PCT) trends from Reference 3 used to determine the limiting break and failure combination are not affected by the RFWT condition. The methodology documented in Reference 2 was used to analyze the FWTR cases to determine the effect of FWTR on the Licensing Basis PCT reported in Reference 3. The initial conditions for the FWTR analysis are listed in Table 2-1.

2.2 EVALUATION

[[

]]

The limiting break and failure combination for HCGS was evaluated with the maximum FWTR for Appendix K and nominal assumptions using an approved set of ECCS parameters at the following power and flow conditions:

- Pre-EPU (3,430 MWt for Appendix K and 3,339 MWt for nominal) and Maximum Extended Load Line Limit Analysis (MELLLA) core flow (76.6 Mlbm/hr),
- EPU (3,917 MWt for Appendix K and 3,840 MWt for Nominal) and MELLLA core flow (94.8 Mlbm/hr), and
- EPU (3,917 MWt for Appendix K and 3,840 MWt for Nominal) and rated core flow (100.0 Mlbm/hr).

Several power and flow conditions from the allowed operating domain are evaluated to demonstrate that a bounding PCT result is determined. Table 2-2 summarizes the PCT results for both NFWT from Reference 3 and RFWT. Reference 4 indicates the restriction on the upper bound PCT is eliminated for all plants using the SAFER/GESTR-LOCA application methodology, which includes HCGS. In addition, Reference 3 indicates the 1,600°F restriction on the upper bound PCT is no longer applicable when evaluating the effect of changes and errors reported under the requirements of 10 CFR 50.46. Reference 3 indicates the licensing basis PCT is 1,380°F and bounds the PCT results for NFWT. The licensing basis PCT is determined based on a comparison of the nominal PCT results with PCT results considering Appendix K conservatisms. Additional uncertainties are applied statistically in the form of an adder to the difference. Given the PCT results shown in Table 2-2 for FWTR, it is determined the current

licensing basis PCT of 1,380°F would continue to be applicable and bounding the cases with RFWT as well as NFWT. Therefore, the 10 CFR 50.46 acceptance criteria continues to be met for up to a 102°F FWTR because the PCT results remain below the licensing basis PCT.

The cases discussed assume a mid-peaked axial power shape for the core, consistent with the base SAFER/GESTR analysis of Reference 3. Alternate power shapes have been evaluated to confirm the mid-peaked axial power shape as limiting compared to a top-peaked axial power shape.

The DBA-LOCA break result was calculated for FWTR.

- The calculated maximum fuel element cladding temperature does not exceed 2,200°F.
- The calculated total local oxidation does not exceed 17% times the total cladding thickness.
- The calculated total amount of hydrogen generated from a chemical reaction of the cladding with water or steam is less than 1% times the hypothetical amount if all the metal in the cladding cylinder were to react.
- The core remains amenable to long term cooling.
- The sufficient long term core cooling remains available.

[[

]]

2.3 CONCLUSION

The results of the evaluation demonstrate that the criteria described in 10 CFR 50.46 and in the SAFER/GESTR SER are met for FWTR with GE14 fuel.

Table 2-1

DBA LOCA Initial Conditions for HCGS FWTR

Plant Parameters	Pre-EPU Nominal	Pre-EPU Appendix K	EPU Nominal	EPU Appendix K
Thermal Power (MWt)	3,339	3,430	3,840	3,917
Thermal Power (% of 3,840 MWt)	87.0	89.3	100	102
Core Flow (Mlb/hr)	76.6	76.6	100.0	100.0
Core Flow (% of 100 Mlb/hr)	76.6	76.6	100.0	100.0
Vessel Steam Dome Pressure (psia)	1,020	1,055	1,020	1,055
Feedwater Temperature (°F)	319.4	321.4	329.7	331.3

Table 2-2

SAFER/GESTR-LOCA Results Summary

for the Limiting Recirculation Line Break

Power (% EPU)	Flow (%)	Evaluation Assumption	Break Size	Location	Single Failure	FWTR PCT (°F)	NFWT PCT [1] (°F)
[[							
							]]

Note:

1. Reference 3, Table 5-3.

3.0 CONTAINMENT SYSTEM RESPONSE

3.1 INTRODUCTION

An evaluation was performed to determine the effect of operation with up to a 102°F FWTR on the design basis containment analysis performed for the HCGS EPU (Reference 1). [[

]] Therefore, the short-term DBA-LOCA containment response was analyzed to evaluate the effect of the FWTR. The containment responses of concern during this time period are:

- Peak drywell pressure
- Peak drywell-to-wetwell pressure difference
- Hydrodynamic loads

FWTR has no effect on the decay heat, and the effect on the vessel sensible energy is negligible, because the reactor power level and operating pressure are not increased. [[

]]

3.2 ANALYSIS APPROACH

The M3CPT code (References 5 and 6) was used to evaluate the short-term pressure and temperature response to the DBA-LOCA. This code was previously used for the HCGS EPU containment analysis (Reference 1). The analysis uses the LAMB code (Reference 7) to calculate the blowdown flow rate and enthalpy, which are then used as input to M3CPT. Application of the LAMB blowdown model for containment analyses is identified in Reference 8.

The FWTR analysis was performed at the following four power/flow (P/F) points representing the boundary core power/flow points of the P/F map in Figure 2-2 of Reference 1.

a) 100%P / 100%F

b) 100%P / 105%F

c) 100%P / 94.8%F

d) 57.6%P / 39.2%F

The analysis power conditions included an additional 2% conservatism. At these P/F points, calculations were performed with FWTR, and compared to the results for the corresponding analysis without FWTR (i.e., NFWT obtained from Reference 1 to evaluate the effect of FWTR

on the containment response). These calculations show the effect of the FWTR condition for the entire core flow range with maximum subcooling and are therefore representative of the FWTR domain.

3.3 ANALYSIS RESULTS

3.3.1 DBA-LOCA Short-Term Containment Pressure and Temperature

Consistent with EPU (Reference 1), the short-term DBA-LOCA analysis was performed using the M3CPT code at the boundary P/F points with FWTR, and compared with NFWT cases performed for EPU (Reference 1). The analysis input values are identical to those used for the Reference 1 analysis, except for the application of the FFWTR conditions and reduction of the power from 3,952 MWt (conservatively assumed in the analysis that supports Reference 1) to 3,840 MWt (current licensed thermal power (CLTP)). As mentioned in Section 3.1, [[

]] Therefore, the pressure and temperature responses were evaluated only for the first 30-second period. The peak values of containment pressure and temperature responses during this period are compared to assess the effect of FWTR on the containment system during the DBA-LOCA.

That comparison shows that:

- [[

]]

3.3.2 DBA-LOCA Hydrodynamic Loads

Four types of hydrodynamic loads are addressed for the DBA-LOCA: (1) pool swell loads; (2) vent thrust; (3) condensation oscillation (CO) loads; and (4) chugging loads. The effect of FWTR on these loads is evaluated by comparing the pressure and temperature responses obtained in Section 3.3.1 with those used in the load definitions for HCGS.

Pool Swell Loads

The pool swell loads are determined by the initial drywell pressurization following the initiation of the DBA-LOCA. The drywell pressure response used in the pool swell design load analysis

for NFWT is presented at EPU conditions in Reference 1, which concluded that the pressurization exhibited by this pressure response bounds the initial drywell pressurization for all cases. [[

]]

Vent Thrust Loads

Vent thrust loads are also determined by the initial drywell pressurization following the initiation of a DBA-LOCA. [[

]]

Condensation Oscillation Loads

CO loads result from oscillation of the steam-water interface that forms at the vent exit during the region of high vent steam mass flow rate. This occurs after pool swell and ends when the steam mass flux is reduced below a threshold value. CO loads increase with higher steam mass flux and higher suppression pool (SP) temperature. The CO loads include loads on submerged boundaries and submerged structures. [[

]]

Chugging Loads

Chugging loads include loads on the SP boundary and submerged structures and vent (downcomer) lateral loads. Chugging loads result from the collapse of steam bubbles that form at the vent exit. The chugging load definition for HCGS was based on the data from the chugging tests that covered thermal-hydraulic conditions expected for a Mark I containment geometry. Furthermore, chugging occurs when steam mass flux through the vent is not high enough to maintain a steady steam/water interface at the vent exit. Consequently, chugging occurs at the tail end of the DBA-LOCA or IBA, or during an SBA with the reactor at pressure. [[

]]

3.4 CONCLUSION

Based on the evaluations presented in this section, it is concluded that the FWTR operation at HCGS has no adverse effect on the DBA-LOCA containment pressure and temperature response. It is also concluded that the current LOCA hydrodynamic loads definition for HCGS is not affected by the FWTR operation.

4.0 REACTOR ASYMMETRIC LOADS

Consistent with MELLLA and EPU (References 9 and 1), the RSLB mass and energy release rate profiles used in developing the asymmetric loads for FFWTR were calculated using the LAMB method. The LAMB calculation considers the realistic pipe break separation time history and ignores the fluid inertia effect, providing conservative mass and energy blowdown. For instantaneous FWLB, the original method from NEDO-24548 (Reference 10) used for MELLLA and EPU was also applied for the mass and energy release calculation for FFWTR. Both breaks considered various P/F conditions along the P/F map boundary, including minimum pump speed, MELLLA and increased core flow (ICF).

- 102% rated power / 100% rated core flow
- 102% rated power / 105% rated core flow
- 102% rated power / 94.8% rated core flow
- 58.8% rated power / 39.2% rated core flow

Using the revised mass/energy release calculation applicable to the FWTR condition, the new sub-compartment pressure time histories were calculated. The RSLB pressure time histories are based on a flow diverter that develops a 25% annulus and 75% drywell-side flow split. For the FWLB, the mass/energy release calculations were used as input for a finite-break opening calculation based on actual pipe displacement. Both the RSLB flow diverter and the FWLB finite opening were part of the original HCGS design basis calculations (Reference 11). [[

]]

4.1 LINE BREAK ANALYSIS

The effect of FWTR on HELB mass and energy releases to the annulus region between the reactor pressure vessel (RPV) and the biological shield wall (BSW) were evaluated. The change in mass and energy release from the break may affect the asymmetrical loads acting on the primary and containment structures. AP analysis determines the loads on the primary structure model as a result of these pressures, and the effect of these loads on the structural integrity of the primary structure and its constituent elements. These evaluations were performed over the range of P/F conditions associated with the FWTR boundary.

The following line breaks in the annulus region (between RPV and BSW) were evaluated for the effects of FWTR:

- RSLB; and
- Feedwater Line Break (FWLB).

Evaluations were performed to determine the effect of FWTR on the dynamic structural response of the RPV, reactor internals, piping, BSW and RPV pedestal (drywell inner skirt). The structural responses were evaluated due to the application of RSLB and FWLB loads.

4.1.1 Recirculation Suction Line Break

These responses included the maximum forces and moments, and the peak accelerations at various RPV and internal component locations. The results were compared with those of the design basis, at representative locations analyzed before. Based on this comparison, it is observed that current analysis structural loads on the RPV and reactor internals are bounded by the design basis loads.

The amplified response spectra (ARS) were listed and plotted for damping values of 2% and compared with the design basis results (up to the design basis frequency of 60 Hz). In the case of RSLB, the comparison indicates that the design basis ARS responses are not bounding at locations on the shield wall and pedestal. The effects of the increase in ARS responses are addressed in Section 4.1.3.

4.1.2 Feedwater Line Break

These responses included the maximum forces and moments, and the peak accelerations at various RPV and internal component locations. The results were compared with those of the design basis at representative locations analyzed before. Based on this comparison, it is observed that current analysis structural loads on the RPV and reactor internals are bounded by the design basis loads.

The ARS were listed and plotted for damping values of 2% and compared with the design basis results (up to the design basis frequency of 60 Hz). In the case of FWLB, the comparison indicates that the design basis ARS responses are bounding at representative locations on the RPV, internals, shield wall, and pedestal.

4.1.3 Evaluation of Structural Response

The results of the structural evaluation due to RSLB and FWLB loads indicate that the structural loads (accelerations, forces and moments) are bounded by the design basis loads at the representative locations on the RPV and RPV internals. The BSW and pedestal were evaluated and showed acceptable structural margins. However, the design basis ARS responses are not bounding at locations on the shield wall and pedestal. This is observed for the RSLB case. This required further evaluation of piping and structural systems (Section 5.4), specifically for the shield wall and pedestal components.

For the shield wall, at a few locations, the ARS responses for RSLB were non-bounding in the lower response range (that is, for frequencies 10 Hz and lower). However, these accelerations are much lower than the maximum values at peak frequencies (occurring at approximately 60 Hz) for which the shield wall is originally qualified, the governing load case for the design of the shield wall being that due to RPV rupture. Thus, the detailed evaluation addressed the non-bounded accelerations in the lower frequency range and determined that all downstream components are within design limits.

For the reactor pedestal (drywell inner skirt), the ARS responses for RSLB were bounding in the peak range. However, the pedestal is slightly non-bounded at a small period before the peak range (at approximately 45 Hz). Nevertheless, the design of the RPV pedestal and the drywell inner skirt are governed by the RPV break load combinations. Thus, the detailed evaluation determined that all downstream components are within design limits.

4.1.4 Drywell Head Region

The drywell head subcompartment pressurization was evaluated for the effect of FWTR for the RPV head vent line break.

A break of the RPV head vent line (steam break) in the upper drywell head region causes downward loads on the bulkhead plate. The break flow for this steam break is controlled by RPV pressure at rated conditions. FWTR operation does not increase the RPV pressure. Therefore, there is no effect of FWTR on the bulkhead plate loading due to this break.

4.2 JET IMPINGEMENT, JET REACTION, AND PIPE WHIP LOADS

The reactor asymmetric loads include the following input loadings:

- Subcompartment Pressure Time Histories;
- Jet Impingement (JI) Loads;
- Jet Reaction (JR) Loads; and
- Pipe Whip Restraint (PWR) Loads.

The same pipe break separation time history used for the AP loads analysis described above is used to calculate the JI/JR loads on the RPV and the BSW. The refined methodology developed for the HCGS Average Power Range Monitor, Rod Block Monitor and Technical Specification Improvement Program (ARTS)/MELLLA analysis, and described in HCGS Updated Final Safety Analysis Report (UFSAR), Revision 15, Appendix 3C, was employed for the calculation of the JI/JR loads.

The pipe whip (PW) thrust force time histories calculated with the refined methodology were defined as step functions in the Pipe Dynamic Analysis (PDA) program to determine PWR loads. This analytical approach is used to determine the response of a pipe subjected to the thrust force occurring after a pipe break. To limit the pipe movement, a PWR is added to inhibit the motion following the break. The break flow time histories are used as input to define the PW force characteristics with respect to the mass and energy release rate from the broken pipe end in the PDA program. The restraint maximum, steady-state, and reaction force time history as the PWR reaction loads output are obtained from the PDA program.

Other high-energy systems are not affected by the FWTR operating condition and therefore HELB JI and PW loads for those systems remain unchanged. The resulting FWTR PW (targets) and JI loads due to the postulated breaks (terminal and intermediate break locations) in recirculation suction, recirculation discharge, and feedwater lines inside containment are bounded by the current licensing basis PW and JI loads.

5.0 REACTOR COOLANT AND CONNECTED SYSTEMS

5.1 REACTOR INTERNAL PRESSURE DIFFERENCES

FWTR has a potential effect on RIPD analysis because lower steam generation in the core could change RPV depressurization and could change the flow mismatch between the steam generated in the core and the steam leaving the RPV through the break. Operation in the ICF domain results in higher initial core flow relative to rated core flow conditions and therefore yields a higher pressure difference across the components. ICF bounds operation at lower core flows such as those for the MELLLA domain (Reference 9). The purpose of this analysis is to evaluate the effect of RFWT up to 102°F (feedwater temperature of 329.6°F) on RIPDs for HCGS in the limiting ICF domain with GE14 fuel in the core. The reduction for FFWTR is 102°F and the reduction for FWHOOS is 60°F; therefore, RIPD analysis assumes the maximum reduction of 102°F to encompass both FFWTR and FWHOOS.

As part of RIPD, the minimum fuel lift margin and maximum CRGT lift forces are also analyzed.

5.1.1 RIPD Analysis Approach and Inputs

The RIPD analysis (including fuel lift margin and CRGT lift force) is performed for the Faulted condition. The RIPDs at the Emergency condition are bounded by those at the Faulted condition due to a slower depressurization rate, as demonstrated in Reference 1. The RIPDs at both Normal and Upset conditions with NFWT bound those with FWTR due to lower steam generation.

The Faulted condition RIPD values are calculated using the same LAMB model as used in Reference 1 to analyze the limiting main steam line break (MSLB) inside containment accident. The RIPDs for the Faulted condition are calculated at 102% of CLTP (3,840 MWt) and 105% core flow. The Faulted condition RIPD calculation also includes an evaluation at the low power cavitation interlock point (21% of CLTP and 105% core flow), consistent with Reference 1.

5.1.2 RIPD Analysis Results

The results of the RIPD calculation with FWTR up to 102°F are shown in Tables 5-1 through 5-3.

The RIPD results presented herein will be used for further structural integrity evaluation.

5.2 ACOUSTIC AND FLOW-INDUCED LOADS

Acoustic and flow-induced loads on the jet pump, core shroud and shroud support due to RSLB are evaluated because FWTR would increase downcomer subcooling in the limiting MELLLA domain and consequently increase the loads on these components.

5.2.1 Analysis Approach and Inputs

The same methods used in References 1 and 9 are used in this FWTR evaluation. The following assumptions and initial conditions are used in the determination of the acoustic and flow induced loads for a HCGS FWTR of 102°F.

Analytical Assumptions[1]	Bases/Justifications
102P/100F, NFWT (431.6° F)	Consistent with HCGS rated licensing basis
102P/100F, FWTR (329.6°F) 102P/94.8F, FWTR (329.6°F)	MELLLA P/F state point at full power
58.7P/39.2F, FWTR (329.6°F)	MELLLA Upper Boundary at Minimum Pump Speed

Note:

1. The 2% additional power is assumed for accident application, consistent with References 1 and 9.

5.2.2 Analysis Results

The baseline flow-induced loads at 102% of CLTP/100% of core flow are summarized in Table 5-4, and the flow-induced load multipliers for the off-rated conditions are shown in Table 5-5. [[

]] The acoustic load is summarized in Table 5-6. The acoustic and flow-induced loads will be used for further structural evaluation.

5.3 Reactor Internals Structural Integrity

The structural integrity evaluation of the reactor internals was performed for the loads associated with FWTR of 102°F considering a full core of GE14 fuel and a core comprised of GE14 fuel and 12 GE14i Isotope Test Assemblies (ITAs). The fatigue life of the reactor internals will be affected by the plant life extension (PLEX) to 60 years. Therefore, the Normal/Upset condition fatigue life assessment of key reactor internals required for the PLEX to 60 years was also qualitatively performed. The evaluation was performed consistent with the load combinations and American Society of Mechanical Engineers (ASME) Code allowable stresses and other acceptance criteria considered in the design basis (EPU) evaluation (Reference 1). FWTR has no effect on the seismic loads; hence, the current design basis seismic loads remain valid for the reactor internals. The original design basis AP loads remain bounding for FWTR. All applicable loads such as seismic, AP, dead weight, RIPDs, hydraulic/flow loads, thermal loads, acoustic and flow induced loads due to postulated RSLB LOCA were considered in the evaluation, as appropriate.

The structural integrity evaluation of the reactor internals for the 40-year design life was performed with respect to the design basis (EPU) evaluation (Reference 1). For Normal, Upset, and Emergency conditions, and for the 40-year design life, the design basis (EPU) evaluation (Reference 1) remains bounding for the reactor internals because all applicable loads for FWTR

are either bounded by those considered in the design basis (EPU) evaluation or have negligible effect on the structural integrity of the reactor internals. Therefore, only the Faulted condition evaluation of the reactor internals is discussed below in detail. The reactor internals are also shown to have satisfied the design basis ASME Code stresses and other acceptance criteria for the Faulted condition for FWTR. Moreover, the Normal/Upset condition fatigue usage factors for the key reactor internals required for the PLEX to 60 years are also reported and shown to be within the allowable value of one.

A description of the structural integrity assessment of the reactor internals is provided below.

Shroud: The shroud evaluation was performed with respect to the design basis (EPU) evaluation (Reference 1). The maximum increase in the faulted condition RIPDs across the shroud head and the core plate is approximately 2%. The acoustic load due to RSLB LOCA also increased by approximately 2%. The current design basis seismic (safe shutdown earthquake (SSE)) load remains unaffected for FWTR. The AP loads remain bounded by the original design basis AP loads. High stress margin to allowable stress [[ ]] exists for the Faulted condition. Therefore, the shroud, in its un-cracked condition, remains qualified for FWTR.

The last shroud inspection in 2007 found several small flaws in the shroud. Therefore the shroud flaw evaluation was reviewed and reconciled for the increases in RIPDs and acoustic loads due to RSLB LOCA at FWTR conditions. The result of this review is that operation with the flawed shroud remains acceptable for 10 years from the last inspection in 2007 per the flaw evaluation guidelines of BWRVIP-76-A (Reference 14). After the 10-year period, the shroud will be re-inspected and re-evaluated based on the results of the inspection.

Shroud Support: The Faulted condition RIPD and acoustic load due to RSLB LOCA remain unchanged for FWTR with respect to the design basis (EPU) evaluation (Reference 1). The current design basis seismic (SSE) load remains unaffected for FWTR. The AP loads remain bounded by the original design basis AP loads. The effect of FWTR on the fatigue life of the component is deemed to be insignificant. The PLEX to 60 years fatigue usage factor for the shroud support is [[ ]], which is less than the allowable one. Therefore, the shroud support, in its un-cracked condition, remains qualified for FWTR for the PLEX to 60 years.

Core Plate: The Faulted condition RIPD remains bounded for FWTR with respect to the design basis (EPU) evaluation (Reference 1). The current design basis seismic (SSE) load remains unaffected for FWTR. The AP loads remain bounded by the original design basis AP loads. The core plate was evaluated for maximum stress and its capability to resist buckling in the design basis (EPU) evaluation (Reference 1) for Normal, Upset, Emergency, and Faulted conditions. The calculated Faulted condition maximum stress is within the design basis ASME Code allowable stress limit [[ ]]. The effect of FWTR on the fatigue life of the component is deemed to be insignificant as the Normal and Upset condition loads remain unaffected by FWTR. The PLEX to 60 years fatigue usage factor of the core plate is [[ ]], which is less than the allowable value of one. Therefore, the core plate, in its un-cracked condition, remains qualified for FWTR for the PLEX to 60 years.

Top Guide: The Faulted condition RIPD increased by 100% [[ ]] with respect to the design basis (EPU) evaluation (Reference 1). However, the EPU evaluation (Reference 1) was performed based on the new load evaluation. The FWTR RIPD [[ ]] is bounded by the new load evaluation RIPD [[ ]]. The current design basis seismic (SSE) load remains unaffected for FWTR. The AP loads remain bounded by the original design basis AP loads. Therefore, all applicable loads (Faulted condition) for the Top Guide for FWTR remain bounded with respect to the new load evaluation, and the new load evaluation is valid for FWTR. The effect of FWTR on the fatigue life of the component is deemed to be insignificant as the Normal and Upset condition loads remain unaffected by FWTR. The PLEX to 60 years fatigue usage factor of the top guide is [[ ]], which is less than the allowable value of one. Therefore, the top guide remains qualified for FWTR for the PLEX to 60 years.

Orificed Fuel Support (OFS): The Faulted condition loads such as RIPDs, AP loads and seismic loads unaffected or bounded for FWTR with respect to the design basis (EPU) evaluation (Reference 1). Therefore, the OFS remains qualified for FWTR.

Control Rod Guide Tube (CRGT): The Faulted condition loads such as RIPDs, AP loads, seismic loads, and maximum flow impingement loads remain unaffected or bounded for FWTR with respect to the design basis (EPU) evaluation (Reference 1). Therefore, the CRGT, in its un-cracked condition, remains qualified for FWTR.

Control Rod Drive Housing (CRDH): The Faulted condition loads such as design pressure, flow impingement loads due to the core flow, AP loads and seismic (SSE) loads remain unaffected or bounded for FWTR with respect to the design basis (EPU) evaluation (Reference 1). Therefore, the CRDH remains qualified for FWTR.

Fuel Channel: The Faulted condition RIPD and seismic (SSE) loads remain unaffected for FWTR relative to the design basis (EPU) evaluation (Reference 1). The AP loads remain bounded by the original design basis AP loads. Also, GE14i utilizes same fuel channel as GE14 fuel. Therefore, the GE14 fuel channel remains qualified for FWTR.

Steam Dryer: The Faulted condition loads, such as RIPDs and seismic loads, remain unaffected for FWTR with respect to the design basis (EPU) evaluation (Reference 1). Therefore, the steam dryer remains qualified for FWTR.

Feedwater Sparger: The effect of a maximum FWTR of 102°F was evaluated for the feedwater sparger. For FWTR, feedwater flow and RPV annulus temperature are reduced by approximately 12% and 13°F relative to normal operating conditions. The primary stresses in the feedwater sparger are small compared to the thermal stresses. Thermal stresses in the feedwater sparger are high and of cyclical nature due to the system thermal transients (e.g., turbine roll, turbine trip). Hence, fatigue is the most limiting parameter for the feedwater sparger. The fatigue evaluation of the feedwater sparger for FWTR was qualitatively performed based on a generic stress/fatigue analysis, which is also applicable to the HCGS feedwater sparger. The generic fatigue analysis was conservatively performed by lumping transient cycles with the most severe transients such as the turbine roll, where instantaneous fluid temperature

drops of > 450°F was considered. Considering the conservatism inherent in the thermal stress and fatigue evaluation, it is concluded that the results of the generic analysis are also applicable to the HCGS feedwater sparger. The current design basis seismic load remains unaffected for FWTR and the design basis AP loads remain bounding for FWTR. Based on the qualitative evaluation, it is concluded that the cumulative fatigue usage remains within the allowable value of one for the design life of 40 years. It should be noted that the feedwater sparger does not meet any of the conditions in 10 CFR 54.4(a), and thus is not subject to the associated PLEX requirement. Therefore, the feedwater sparger remains qualified for FWTR.

Jet Pump Assembly: All applicable Faulted condition loads such as reactor pressure, recirculation drive flow, acoustic loads due to RSLB LOCA, and seismic (SSE) loads remain unaffected for FWTR relative to the design basis (EPU) evaluation (Reference 1). The AP loads remain bounded by the original design basis AP loads. The riser brace was found to be the most critical location. The maximum faulted condition calculated stress in the riser brace was found to be within the design basis ASME Code allowable stress limit [[ ]]. For FWTR, the RPV/shroud annulus temperature is reduced by approximately 13°F (approximately a 2.5% reduction relative to the current RPV annulus temperature differential), which is deemed to have an insignificant effect on the riser brace thermal stresses. The Normal and Upset condition thermal transients remain the same. Hence, the fatigue usage factor for the Normal and Upset conditions for the riser brace remains unaffected with respect to the design basis (EPU) evaluation (Reference 1). The riser brace was qualitatively evaluated for fatigue for PLEX to 60 years by multiplying the 40-year fatigue factor by 1.5. The fatigue usage factor for the PLEX to 60 years was estimated to be [[ ]], which is within the allowable value of one. Therefore, the jet pump assembly and the repairs remain qualified for FWTR for the PLEX to 60 years.

Core Spray Line and Sparger: The Faulted condition loads such as the system flow and seismic (SSE) loads remain unaffected for FWTR relative to the design basis (EPU) evaluation (Reference 1). The AP loads remain bounded by the original design basis AP loads. The maximum faulted condition calculated stress for the core spray line and sparger are within the ASME Code allowable stress limit. The RPV/shroud annulus temperature is reduced by approximately 13°F (approximately a 2.5% reduction relative to the current RPV annulus temperature differential) for FWTR, which is deemed to have an insignificant effect on the core spray line thermal stresses. The Normal and Upset condition thermal transients remain the same. Hence, the fatigue life for the Normal and Upset condition of the core spray line remains unaffected with respect to the design basis (EPU) evaluation (Reference 1). The core spray line was qualitatively evaluated for fatigue for PLEX to 60 years by multiplying the 40-year fatigue factor by 1.5. The fatigue usage factor for the PLEX to 60 years was estimated to be [[ ]], which is within the allowable value of one. Therefore, the core spray line and sparger remains qualified for FWTR for the PLEX to 60 years.

Access Hole Cover: The Faulted condition loads, such as RIPDs, vertical acoustic load on the shroud support due to RSLB LOCA, and seismic (SSE) loads remain unaffected (or bounded) for FWTR with respect to the design basis (EPU) evaluation (Reference 1). Therefore, the access hole cover remains qualified for FWTR.

Shroud Head and Steam Separators Assembly. Shroud head bolts (SHB) are the most limiting components of the shroud head and steam separators assembly. The Faulted condition loads such as RIPD and seismic (SSE) remain unaffected for FWTR relative to the design basis (EPU) evaluation (Reference 1). The AP loads remain bounded by the original design basis AP loads. The maximum Faulted condition calculated stress for the SHB is within the ASME Code allowable stress limit. The RPV/shroud annulus temperature reduced by approximately 13°F (approximately 2.5% reduction in the current RPV annulus temperature differential) for FWTR, the effect of which is to reduce the design thermal preload of the SHB by 2.5%. However, sufficient thermal preload exists in the SHB to prevent shroud head lift-off during normal operating conditions, and also considering the Upset condition RIPD only. The original number (48) of SHB and configuration was assumed in the SHB evaluation. Therefore, the shroud head and steam separators assembly remains qualified for FWTR.

In-Core Housing and Guide Tube: The Faulted condition loads such as design pressure, system flow, AP loads, and seismic (SSE) loads remain unaffected or bounded for FWTR with respect to the design basis (EPU) evaluation (Reference 1). Therefore, the in-core housing and guide tube is qualified for FWTR.

Core DP and Liquid Control Line: The Faulted condition loads such as seismic and core flow loads remain unaffected for FWTR relative to the design basis (EPU) evaluation (Reference 1). The AP loads remain bounded by the original design basis AP loads. The PLEX to 60 years fatigue usage factor of the core DP and liquid control line is [[ ]], which is less than allowable value one. Therefore, the core DP and liquid control line remains qualified for FWTR for the PLEX to 60 years.

Low Pressure Coolant Injection (LPCI) Coupling: The Faulted condition RIPD increased by 2% with respect to the design basis evaluation (Reference 1). The seismic load remains unchanged. The AP loads remain bounded by the original design basis AP loads. The maximum faulted condition calculated stress for the LPCI coupling is within the ASME Code allowable stress limit [[ ]]. Therefore, the LPCI coupling remains qualified for FWTR.

5.4 REACTOR COOLANT PRESSURE BOUNDARY PIPING

As noted in Section 4.1.3, the ARS envelopes are, in general, bounded by the original design basis envelopes in the frequency range from 10 Hz to 60 Hz. However, the envelope spectra showed additional frequency content below 10 Hz at locations that could affect the reactor coolant pressure boundary (RCPB) piping. The RCPB piping, piping supports, and restraints were evaluated to confirm that these components could accommodate the change in the AP loads. The results of those evaluations showed with the change in AP loads, the stresses on the piping, supports, and restraints will continue to meet the applicable ASME Code requirements.

Table 5-1

Summary of RIPD Results (Faulted Conditions)

Components	102P/105F [1] FWTR (329.6° F) (psid)	21P/105F [1] FWTR (329.6° F)[3] (psid)
Shroud Support Ring and Lower Shroud	[[	
Core Plate and Guide Tube		
Upper Shroud		
Shroud Head		
Shroud Head to Water Level, Irreversible		
Shroud Head to Water Level, Elevation		
Channel Wall – Core Average Power Bundle		
Channel Wall – Maximum Power Bundle		
Top Guide		
Steam Dryer		]]

Notes:

1. 100P = 100% of CLTP = 3,840MWt; 100F = 100% of Core Flow = 100.0 Mlbm/hr
2. Bounded by the hot standby condition in Reference 1, which does not change with FWTR.
3. Adjusted for the cavitation interlock condition at RFWT of 102°F.

Table 5-2
Minimum Fuel Lift Margin Analysis Results

Case Conditions	Average Power Bundle (lbf)	Hot Power Bundle (lbf)
102P/105F FWTR (329.6°F)	[[	
21P/105F FWTR (329.6°F)		
102LPU/105F NFWT (435.9°F)[1]		]]

Note:

1. 100LPU = 120% of OLTP = 120*3,293 = 3,952MWt

Table 5-3
Maximum CRGT Lift Forces

Case Conditions	Average Power Bundle (lbf)	Hot Power Bundle (lbf)
102P/105F FWTR (329.6°F)	[[	
21P/105F FWTR (329.6°F)		]]

Table 5-4
Summary of Baseline Flow-Induced Loads Results

Item	Component	Parameter	Unit	Baseline Loads[1]
1	Shroud	Baseline Force	kips	[[
2		Baseline Moment at the Shroud Centerline	10^6 in-lbf	
3	Jet Pump	Baseline Force	kips	
4		Baseline Moment at the Jet Pump Centerline	10^6 in-lbf	]]

Note:

1. Loads at rated condition of 102P/100F with NFWT.

Table 5-5
Summary of Flow-Induced Load Multipliers

Item	Component	Operating Conditions	Load Multiplier[1]
1	Shroud/Jet Pump	NFWT 102P / 100F	[[
2		FWTR 102P / 94.8F MELLLA Point	
3		FWTR 58.75P / 39.2F MPS	
4		FWTR 102P / 100F	]]

Note:
1. For off-rated conditions, the multipliers shall be applied for the baseline loads in Table 5-4.

Table 5-6
Summary of Acoustic Loads Results

Item	Component	Parameter	Unit	Maximum Loads[1]
1	Shroud	Total Lateral Force	kips	[[
2		Moment at the Base of the Shroud Centerline	10^6 in-lbf	
3	Shroud Support	Total Vertical Force	kips	
4		Moment at the Shroud Support Plate Outside Edge Nearest the Break	10^6 in-lbf	
5	Jet Pump	Total Lateral Force	kips	
6		Moment at the Center of the Base of the Jet Pump	10^6 in-lbf	]]

Note:
1. The loads are applicable for all conditions.

6.0 OTHER RELATED TECHNICAL ISSUES

6.1 AOO PERFORMANCE

The only AOO that requires consideration in assessing the effect of FWTR on operating limits is the feedwater controller failure – increasing flow (FWCF). This is based upon the finding that the other AOOs, as discussed below, are less sensitive to a reduction in feedwater temperature than to FWCF, which is affected by the increase in core inlet subcooling prior to the turbine trip on high water level.

The rod withdrawal error (RWE) event is a localized transient event that is not affected by the core inlet subcooling change as much as the core wide transient events. The most important parameters affecting the RWE transient response are the initial control rod pattern and the error rod position, both of which are not affected by the RFWT operating condition. The fuel loading error (FLE) consequences are the result of a power mismatch between the correctly and incorrectly loaded fuel. This power mismatch is independent of operating conditions. The loss of feedwater heating (LFWH) event is a core wide transient that is driven by the magnitude of the decrease in feedwater temperature. Initializing from a RFWT reduces the feedwater perturbation and the severity of the LFWH event. The limiting event for vessel overpressure considerations, main steam isolation valve closure with flux scram (MSIVF), is bounded by the same event analyzed at NFWT. This conclusion is based on the reduced steam generation rate associated with the FWTR condition that results in a milder vessel pressurization transient during the MSIVF event, as compared to that for NFWT. Similar to the MSIVF event, the load rejection with no bypass (LRNBP) and turbine trip with no bypass (TTNBP) events are bounded by the same event at NFWT due to the reduced steam generation rate associated with the FWTR condition. The reduction in steam flow reduces the pressurization rate, which results in a lower peak power from a milder void collapse and neutron flux increase.

Based on the above information, the FWCF is the only AOO that may require an adjustment to the Operating Limit Minimum Critical Power Ratio (OLMCPR). The HCGS Cycle 16 supplemental reload licensing report (Reference 15) indicates the EOC LRNBP with NFWT is significantly more limiting than the EOC 16 FWCF with normal and RFWT. Additional FWCF evaluations with FWTR confirm FWCF to be non-limiting at rated power conditions. Therefore, no penalty on the rated power OLMCPR is required while operating with FWTR. The RFWT effect on the change in critical power ratio (ΔCPR) will be evaluated on a cycle specific basis.

At off-rated power conditions, the subcooling portion of the FWCF event increases the severity of the transient response relative to other pressurization events. The FWCF event was evaluated with FWTR at off-rated power conditions and the results confirm no change to the HCGS Cycle 16 power dependent ARTS limits.

6.2 ATWS MITIGATION CAPABILITY

The effect of FWTR on ATWS performance has been previously evaluated on a generic basis. These evaluations have shown that peak values for fuel surface heat flux, vessel bottom pressure, and SP temperature were all reduced when the feedwater temperature was reduced. This

improvement in the ATWS performance was attributed to lower initial steam flow conditions resulting from the lower feedwater temperature. This condition causes a reduction in the vessel pressurization rate and in the mass/energy released into the wetwell.

As a result of the RFWT, the steam generation rate and core void fraction are reduced. The lower steam generation rate is produced because more of the core heat is needed to heat up the colder moderator in the core. The lower steam generation rate increases the ratio of steam flow rate through the relief valves to steam generation rate, and therefore, the peak vessel pressure is lower. There is also less steam released to the SP so the pool heats up less.

The initial conditions associated with FWTR result in a milder transient response relative to the achieved peak and integrated power. Additionally, the PCT occurs in the short-term part of an ATWS event where the RFWT promotes improved heat transfer. The resulting PCT during the ATWS event with RFWT is bounded by that predicted with NFWT.

Therefore, it is concluded that the ATWS analysis results for HCGS at NFWT will bound that for the FWTR condition.

6.3 THERMAL-HYDRAULIC STABILITY

6.3.1 Option III Solution

HCGS has implemented stability solution Option III (Reference 16). Option III is a detect and suppress solution that combines closely spaced Local Power Range Monitor (LPRM) detectors into "cells" to effectively detect either core-wide or regional modes of reactor instability. These cells are termed OPRM cells and are configured to provide local area coverage with multiple channels. Plants implementing Option III have installed hardware to combine the LPRM signals and to evaluate the cell signals with instability detection algorithms. Of these algorithms, only the Period Based Detection Algorithm (PBDA) is credited in the Option III licensing basis. This algorithm provides an instrument setpoint designed to trip the reactor before an oscillation can grow to the point where the Safety Limit Minimum Critical Power Ratio (SLMCPR) is exceeded.

The current stability reload licensing basis is to calculate the limiting OLMCPR required to protect the SLMCPR for both steady-state and transient stability events as specified in the Option III methodology (Reference 17). These stability-based OLMCPR values are calculated for a range of possible OPRM amplitude setpoints. Selection of appropriate instrument setpoints can then be made based upon the actual OLMCPR to provide adequate SLMCPR protection. As part of the HCGS EPU implementation, the setpoint development includes the OPRM penalties discussed in Reference 18.

The Option III stability-based OLMCPR calculation requires the use of the regional DIVOM (Delta CPR over Initial Minimum Critical Power Ratio (MCPR) Versus the Oscillation Magnitude) curve per Reference 17. It was concluded in Appendix B of Reference 17 that significant variations in feedwater temperature (and therefore inlet subcooling) have very little effect on the slope of the DIVOM curve. As a result, the stability-based OLMCPR values, including the penalties discussed in Reference 18, will not change due to RFWT operation.

However, significant changes in feedwater temperature do affect the values of calculated core and channel decay ratios. Lower feedwater temperature typically results in higher decay ratio values, which may increase the size of the area susceptible to instability. In addition, the OPRM trip-enabled region should encompass the backup stability protection (BSP) controlled entry region as described in Section 6.3.2.

6.3.2 Backup Stability Protection

The Option III solution uses BSP (Reference 19) in the case that the OPRM system is declared inoperable. The BSP solution uses the NRC-approved PANACEA/ODYSY methodology (Reference 20) with the ODYSY stability acceptance criteria to create two BSP regions, Region I (Scram) and Region II (Controlled Entry). In addition, a minimum region size is determined from the base BSP regions as described in Reference 19. Therefore, if a calculated BSP region state point is located inside the corresponding base BSP region state point, the calculated BSP region state point must be replaced by the corresponding base BSP region's state point. BSP regions are determined for both NFWT and RFWT on a reload-specific basis.

Demonstration BSP analyses were performed to show the BSP regions with respect to RFWT for a feedwater temperature of 371.6°F (FWHOOS) and a feedwater temperature of 329.6°F (FFWTR). The BSP analysis for the FWHOOS (371.6°F) RFWT operation allows the Option III OPRM trip-enabled region power and flow boundaries to remain at their current values of 26.1% of rated core power and 60.0% of rated core flow. The BSP analysis for the maximum allowable FFWTR (329.6°F) RFWT operation allows the Option III OPRM trip-enabled region power boundary to remain at its current value of 26.1% of rated core power. However, for this maximum allowable RFWT demonstration value, the flow boundary would need to be increased from its current value of 60.0% of rated core flow to 70.0% of rated core flow. This change would encompass the regions susceptible to instability for RFWT operation at FFWTR (329.6°F) based on the demonstration BSP analysis. The adequacy of the Option III OPRM trip-enabled region will be assessed for each reload fuel cycle.

6.3.3 Conclusion

RFWT operation complies with the current licensing requirements for the Option III stability solution. The Option III solution is fully capable of supporting RFWT operation, because it has been demonstrated that RFWT does not affect the slope of the DIVOM curve, which is used on a reload-specific basis to demonstrate that the PBDA setpoint provides SLMCPR protection. The adequacy of the Option III OPRM trip-enabled region will be assessed for each reload fuel cycle. If the Option III OPRM system is declared inoperable, the cycle-specific BSP regions are fully capable of supporting RFWT operation, as shown by the demonstration analyses in Figures 6-1 and 6-2.

6.4 HIGH ENERGY LINE BREAK

Consistent with MELLLA and EPU (References 9 and 1), the following HELBs were evaluated for the effects of FWTR:

- MSLB in the Main Steam Tunnel

- FWLB in the Main Steam Tunnel
- Reactor Core Isolation Cooling (RCIC) Steam Line Break
- High Pressure Coolant Injection (HPCI) Steam Line Break
- Reactor Water Cleanup (RWCU) Line Break

[[

]]

With consideration of flashed steam that maximizes subcompartment pressurization, [[

]] Therefore, FWTR has no effect on the mass and energy releases from FWLB in the main steam tunnel.

FWTR does affect RWCU postulated line breaks [[

]] The effect of FWTR was evaluated for four postulated RWCU break locations: RWCU pump suction, RWCU pump discharge, regenerative heat exchanger tube inlet, and the filter demineralizer inlet. Four different initial conditions were evaluated: minimum pump speed, MELLLA, rated, and 105% ICF.

The original methodology used for calculating the RWCU mass and energy releases was the RELAP5 Mod 1 model developed in Reference 21. The existing model was used and converted to be consistent with the input requirements for RELAP5 MOD 3.2. The RELAP5 Mod 3.2 model of the HCGS RWCU system was benchmarked and used to determine the mass and energy releases from the postulated breaks at FWTR initial conditions (Reference 22). The mass and energy releases determined using the RELAP code were compared against the limiting mass and energy releases provided in Reference 23, which also evaluated EPU and is the current design basis. In all cases the RWCU mass and energy releases for FWTR, which may affect subcompartment pressures and temperatures, are bounded by the current RWCU mass and energy releases.

6.5 FEEDWATER NOZZLE FATIGUE

The fatigue experienced by the feedwater nozzle results from two phenomena, system cycling and rapid cycling. System cycling is caused by major temperature changes associated with system transients. Rapid cycling is caused by small, high frequency temperature fluctuations resulting from the mixing of relatively colder nozzle annulus water with hot reactor water. The colder water impinging the nozzle originates from leakage past the thermal sleeve and from the boundary layer of colder water formed by heat transfer through the thermal sleeve.

FFWTR and FWHOOS operation affects only the rapid cycling fatigue usage. This is primarily due to two reasons. First, the transient temperature swing and rate of change associated with the mode of operation is relatively small and thus does not affect the system cycling usage factor.

As a consequence, different transient behavior caused as a result of FFWTR or FWHOOS operation does not have an effect on system cycling fatigue usage. Second, the time spent at RFWT is a finite contributor to rapid cycling fatigue usage. Because of this, the lower feedwater temperatures experienced during FFWTR or FWHOOS operation could have an adverse effect on rapid cycling fatigue.

The system cycling fatigue usage was evaluated in Reference 24. There is no increase in fatigue usage from system cycling for the feedwater nozzles and feedwater piping at HCGS due to the addition of FFWTR and FWHOOS conditions. These conditions are bounded by other events used in the system cycling fatigue analyses.

The rapid cycling fatigue usage was evaluated for FFWTR and FWHOOS in Reference 25. As the rapid cycling fatigue usage factor was found to be zero in the stainless steel clad, only the bounding carbon steel safe end location was examined. Because the parameters used in the analysis are the same for the nozzle body (SA-508 Class 2) as for the carbon steel safe end, these results are valid for the nozzle body as well. Flow and temperature duty maps for the HCGS feedwater nozzle have been prepared for plant operation with FFWTR and FWHOOS. The calculations are repeated using α values (instantaneous coefficient of thermal expansion, evaluated at the average surface temperature, in/in/°F) from the 2001 ASME Code with Addenda through 2003. The analysis methodology is consistent with that used in the previous analysis, except that the newer code and updated duty maps are used.

The 40-year rapid cycling fatigue usage for the feedwater nozzle safe end is as follows:

- Original duty, original Code: 0.043
- FFWTR duty, newer Code: 0.070
- FWHOOS duty, newer Code: 0.071

The maximum usage is for FWHOOS, and corresponds to a 40-year rapid cycling usage of 0.071. The system cycling fatigue usage from Reference 26 is 0.072 for the bounding carbon steel safe end location. As stated above, there is no increase in system cycling fatigue usage due to the addition of FFWTR and FWHOOS conditions.

In summary, the rapid cycling fatigue usage added to the corresponding system cycling fatigue usage gives the total 40-year cumulative fatigue usage factor of 0.143, which is less than the ASME Code allowable value of 1.0.

For the period of extended operation, beyond 40 years, environmental fatigue factors are applied to the feedwater nozzle as stated in the HCGS License Renewal Application. The projected fatigue usage will exceed 1.0 prior to reaching 60 years. The projection of exceeding 1.0 is not affected by FFWTR or FWHOOS. The License Renewal Application states that corrective action will be taken prior to exceeding the environmental assisted fatigue usage factor value of 1.0. This action is not affected by this analysis.

6.6 REACTOR HEAT BALANCE FOR P-BYPASS SETPOINT ASSESSMENT

Plant operation with RFWT affects the TFSP due to the reduced steam generation. The low power scram bypass setpoint is based on the TFSP. Heat balance calculations were performed specifically to determine the change in steam flow due to NFWT and 102°F FWTR extrapolated back to 24% of rated thermal power (the low power scram bypass setpoint). The heat balance results shown in Table 6-1 allow HCGS to determine the acceptability of the existing low power bypass setpoint for FWTR operation. At RFWT, the reactor scram bypass setting for TFSP is not sufficiently conservative to ensure the reactor scram bypass below the Technical Specification value of 24% rated thermal power. Therefore, a new TFSP setpoint was calculated which maintains the same thermal power for the FWTR condition. This results in the NFWT setpoint being lowered from approximately 22.6% (as validated in the EPU plant power ascension startup test) to approximately 21.4% power. The new setpoint increases the low power bypass setpoint conservatism at NFWT and maintains the same conservatism at FWTR conditions.

6.7 GE14I ISOTOPE TEST ASSEMBLIES

The following analyses and evaluations discussed earlier in this report utilize fuel design characteristics as an input and also determine, where applicable, the acceptability of the fuel design performance under FWTR conditions.

- ECCS Performance Analysis
- Containment System Response
- Reactor Internals Structural Integrity
- RIPDs
- AOO Performance
- ATWS Mitigation Capability
- Thermal-Hydraulic Stability

The analyses and evaluations were performed using the GE14 fuel design as the reference design. In addition, the analyses and evaluations addressed the GE14i ITA design to ensure conclusions based upon the GE14 fuel design were applicable when considering a core comprised of the GE14 fuel design and 12 GE14i ITAs. GE14i is designed to be compatible with other GE fuel designs. The external envelope of the fuel assembly is comparable to the GE14 fuel assembly currently supplied to HCGS. The nuclear characteristics, mechanical characteristics, and thermal-hydraulic characteristics of these GE14i ITAs are compatible with those of the current GE14 fuel being loaded into HCGS.

Consequently, the analysis and evaluations for ECCS Performance Analysis, Containment System Response, Reactor Internals Structural Integrity, AOO Performance, ATWS Mitigation Capability, and Thermal-Hydraulic Stability are applicable for a full core of the GE14 fuel design as well as a core comprised of the GE14 fuel design and 12 GE14i ITAs.

For RIPDs, with the exception of fuel lift margin, the analyses and evaluations based on the reference GE14 fuel design are applicable for a full core of the GE14 fuel as well as a core

comprised of the GE14 fuel and 12 GE14i ITAs. The GE14 fuel lift margin for FWTR is bounded by the fuel lift margin for GE14 at EPU conditions. In addition, the GE14i ITA weighs less than the reference GE14 fuel. The bundle weight for GE14i bundles is 12 lbm less than GE14. Other key parameters determining the fuel lift margin remain unchanged due to similar thermal-hydraulic design. Therefore, the GE14i minimum fuel bundle lift margin is about 12 lbf less than GE14 (GE14 results shown in Table 5-2).

Table 6-1
Reactor Heat Balance Results for P-bypass Setpoint Assessment

Parameter	Unit	NFWT	102°F RFWT
Thermal Power	MWt / % Rated	921.6 / 24.0	921.6 / 24.0
Core Flow	Mlbm/hr / % Rated	41.5 / 41.5	41.5 / 41.5
Core Inlet Enthalpy	Btu/lbm	511.2	507.8
Feedwater Temperature	°F	295.4	238.9
Vessel Steam Flow	Mlbm/hr	3.358	3.164
Dome Pressure	psia	925	923
Steam Line Pressure Drop	psi	3	3
Turbine Stop Valve Pressure	psia	922	920

Figure 6-1
Demonstration of Hope Creek BSP Regions for FFWTR
(329.6°F Feedwater Temperature)

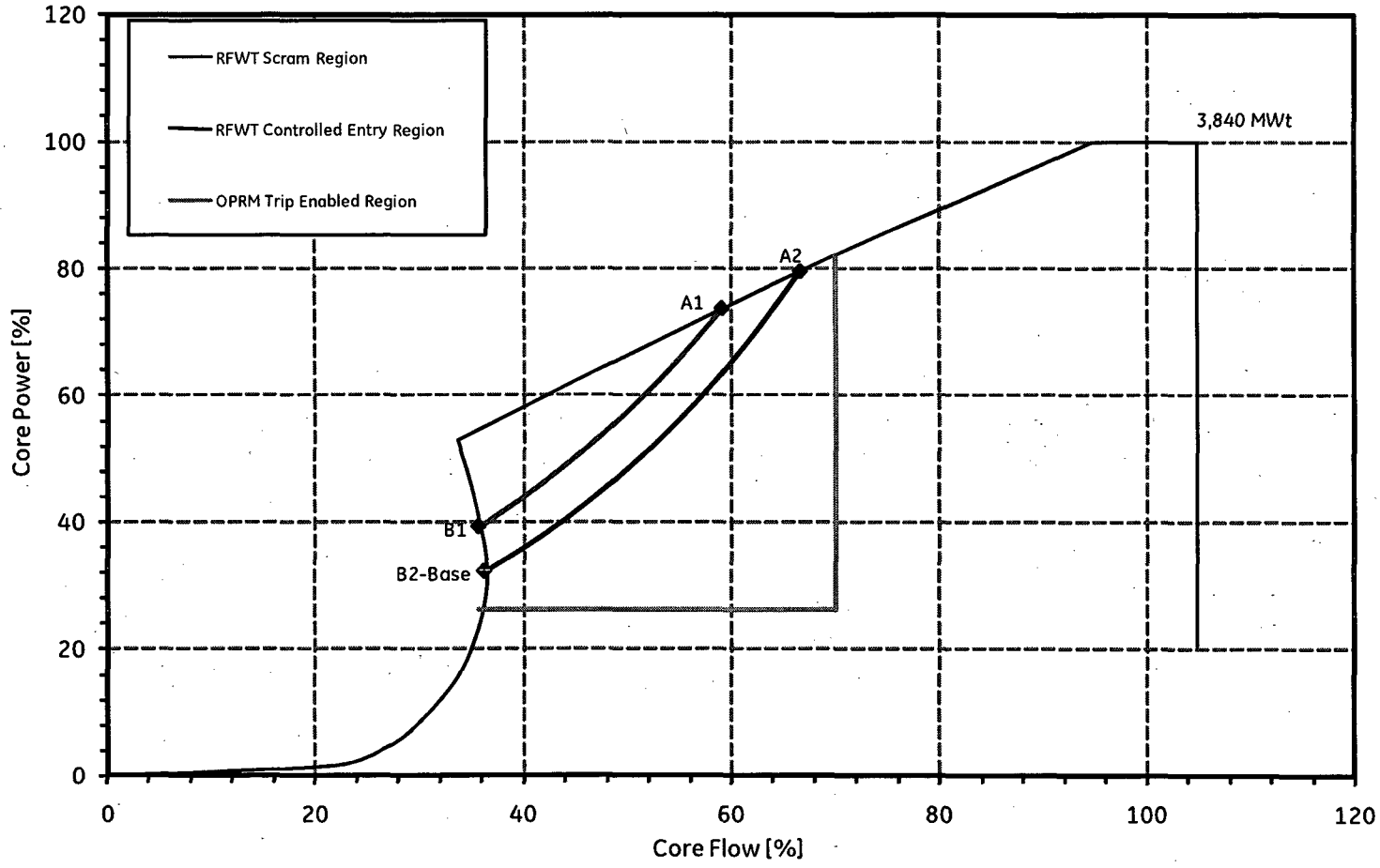

Figure 6-2
Demonstration of Hope Creek BSP Regions for FWHOOS
(371.6°F Feedwater Temperature)

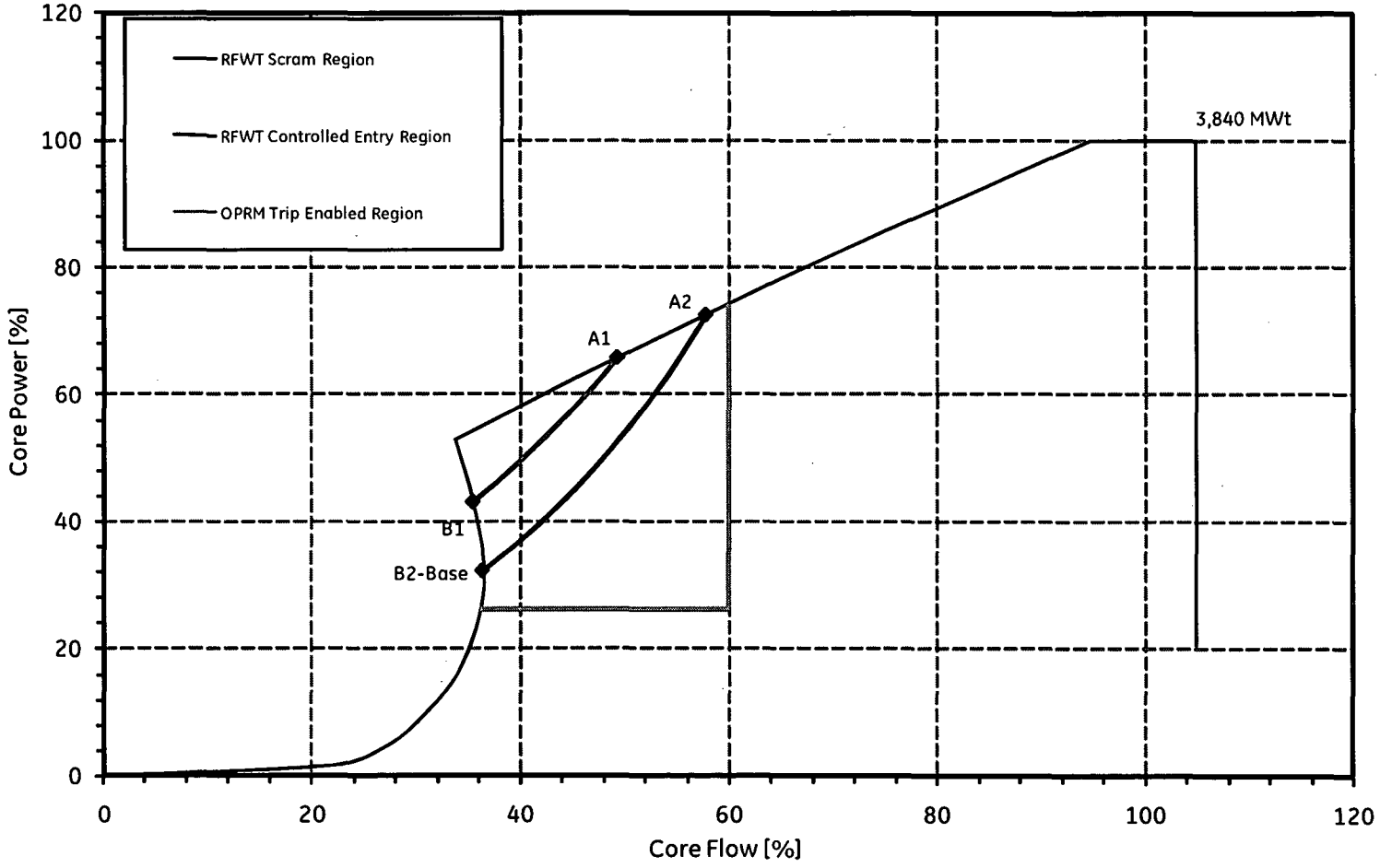

7.0 REFERENCES

1. GE Nuclear Energy, "Safety Analysis Report For Hope Creek Constant Pressure Power Uprate," NEDC-33076P, Revision 2, August 2006 (PSEG VTD No. 430002).
2. GE Nuclear Energy, "The GESTR-LOCA and SAFER Models for the Evaluation of the Loss-of-Coolant Accident, Volume III, SAFER/GESTR Application Methodology," NEDC-23785-1-PA, Revision 1, October 1984.
3. GE Nuclear Energy, "SAFER/GESTR-LOCA Loss of Coolant Accident Analysis for Hope Creek Generating Station at Power Uprate," NEDC-33172P, March 2005.
4. Stuart A. Richards (NRC) to James F. Klapproth (GENE), "Review of NEDE-23785P, Volume III, Supplement 1, Revision 1, 'GESTR-LOCA and SAFER Models for Evaluation of Loss-of-Coolant Accident Volume III, Supplement 1, Additional Information for Upper Bound PCT Calculation,' (TAC No. MB2774)," February 1, 2002.
5. GE Nuclear Energy, "The GE Pressure Suppression Containment Analytical Model," NEDO-10320, April 1971.
6. GE Nuclear Energy, "The General Electric Mark III Pressure Suppression Containment System Analytical Model," NEDO-20533, June 1974.
7. GE Nuclear Energy, "General Electric Model for LOCA Analysis in Accordance with 10 CFR 50 Appendix K," NEDO-20566-A, September 1986.
8. GE Nuclear Energy, "Generic Guidelines for General Electric Boiling Water Reactor Extended Power Uprate," NEDC-32424P-A, February 1999 and NEDO-32424, April 1995.
9. GE Nuclear Energy, "Hope Creek Generating Station APRM/RBM/Technical Specifications/Maximum Extended Load Line Limit Analysis (ARTS/MELLLA)," NEDC-33066P, Revision 2, February 2005.
10. GE Nuclear Energy, "Technical Description Annulus Pressurization Load Adequacy Evaluation," NEDO-24548, January 1979.
11. PSEG Calculation 12-0079, "Annulus Pressurization – Feedwater (& Recirculation) Line Break," Revision 5, May 2006.
12. Worley Parsons Calculation T0401-AP, RV Annulus Pressurization (AP), Revision 4, October 2009.
13. PSEG Calculation 12-0039, "Reactor Annulus Pressurization Analysis," Revision 7, June 2006.
14. BWRVIP-76-A, "BWR Core Shroud Inspection and Flaw Evaluation Guidelines," EPRI Document 1019057, November 2009.
15. GE Hitachi Nuclear Energy, "Supplemental Reload Licensing Report for Hope Creek Unit 1 Reload 15 Cycle 16," 0000-0088-3934-SRLR, Revision 0, March 2009.

16. GE Nuclear Energy, "BWR Owners' Group Long-Term Stability Solutions Licensing Methodology," NEDO-31960-A, November 1995 (including Supplement 1).

17. GE Nuclear Energy, "Reactor Stability Detect and Suppress Solutions Licensing Basis Methodology for Reload Applications," NEDO-32465-A, August 1996.

18. GE Hitachi Nuclear Energy, "Final Safety Evaluation For GE Hitachi Nuclear Energy Americas, LLC Licensing Topical Report NEDC-33173P, 'Applicability of GE Methods to Expanded Operating Domains,' (TAC No. MD0277)," July 21, 2009.

19. OG 02-0119-260, "Backup Stability Protection (BSP) for Inoperable Option III Solution," July 17, 2002.

20. GE Hitachi Nuclear Energy, "ODYSY Application for Stability Licensing Calculations Including Option I-D and II Long Term Solutions," NEDE-33213P-A, April 2009.

21. HCGS Calculation 11-0024 (Q), Revision 7, "High Energy PBOC Blowdown Data," June 2006.

22. Worley Parsons Calculation, "RWCU Pipe Break Mass-Energy Releases RELAP 5 Model FFWTR," T1000-RWCU M/E, Revision 0, April 2010.

23. Worley Parsons Calculation, "RB Subcompartment Evaluation - RWCU Breaks," ARTS MELLLA T1009 Revision 2, September 2003 (Part of PSEG VTD 430000, Sh. 018, August 2006).

24. Structural Integrity Associates (SI), Inc., "Review of Existing Feedwater Fatigue Analyses for HCGS due to System Cycling Effects to Include the Effects of Final Feedwater Temperature Reduction (FFWTR)," SI Report No. 1000369.401, Revision 0, April 2010.

25. Structural Integrity Associates (SI), Inc., "Feedwater Nozzle Rapid Cycling Analysis Incorporating Final Feedwater Temperature Reduction (FFWTR)," SI Calculation No. 1000369.301, Revision 0, April 2010.

26. Structural Integrity Associates (SI), Inc., "Updated ASME Code Stress and Fatigue Analysis for the Hope Creek Feedwater Nozzles," SI Report No. SIR-04-037, Revision 2, March 2010 (PSEG VTD 327372).