U.S. Nuclear Regulatory Commission
Surry Power Station

SR10301
Job Performance Measure APE022.AA1.01

Applicant_____ Start Time_____

Examiner_____

Date _____ Stop Time_____

Title

ISOLATE CHARGING CROSSTIE IN ACCORDANCE WITH 2-ECA-0.2.

K/A: APE022.AA1.01: Ability to operate and / or monitor the following as they apply to the Loss of Reactor Coolant Makeup: CVCS letdown and Charging.

Applicability	**Estimated Time**	**Actual Time**
RO/SRO(I)	15 Minutes	

Initial Conditions

- Task is to be SIMULATED in the plant.
- A Loss of Offsite Power has occurred on Unit 2 and power has subsequently been restored to Unit 2. The team has completed 2-ECA-0.0 (Loss of All A/C Power) and transitioned to 2-ECA-0.2 (Loss of All AC Power Recovery with SI Required) and are currently performing Step 15 (Check if Charging Crosstie Can Be Isolated) of 2-ECA-0.2.
- It has been determined that Charging Crosstie can be isolated. You are to complete Step 15 of 2-ECA-0.2.

Standards

- Candidate correctly manipulates valves as required by 2-ECA-0.2, step 15, to allow for isolation of Charging Crosstie.

Initiating Cues

- This task is to be SIMULATED. Do NOT turn switches, manipulate controls or reposition valves.
- I am the Shift Manager. Unit 2 had experienced a loss of offsite power and charging crosstie from Unit 1 to Unit 2 was utilized for RCS makeup.
- Following the restoration of power to Unit 2, the team transitioned to 2-ECA-0.2, Loss of All AC Power Recovery with SI Required.
- The team has reached step 15 of 2-ECA-0.2, Loss of All AC Power Recovery with SI Required.
- You are to perform step 15 sub-steps d and e.
- When you finish the actions necessary to accomplish this, please inform me.

Terminating Cues

- Completion of 2-ECA-0.2, Loss of All AC Power Recovery with SI Required, step 15.

Procedures

- 2-ECA-0.2, Loss of All AC Power Recovery with SI Required (Revision 17).

Tools and Equipment

- None

Safety Considerations

- Standard Personal Safety Equipment
- Bump hazards in Auxiliary Building Basement
- ALARA

Notes to the Evaluator.

- **Task briefing should occur in the pre-determined location.**
- This task is to be SIMULATED. Do NOT allow the operator to manipulate controls, operate switches or reposition valves.
- Task critical elements are bolded and noted by the words "Critical Step" at the end of the step.

Initiating Cues

- This task is to be SIMULATED. Do NOT turn switches, manipulate controls or reposition valves.
- I am the Nuclear Shift Manager. Unit 2 had experienced a loss of offsite power and charging crosstie from Unit 1 to Unit 2 was utilized for RCS makeup.
- Following the restoration of power to Unit 2, the team transitioned to 2-ECA-0.2, Loss of All AC Power Recovery with SI Required.
- The team has reached step 15 of 2-ECA-0.2, Loss of All AC Power Recovery with SI Required.
- You are to perform steps 15 sub-steps d and e.
- When you finish the actions necessary to accomplish this, please inform me.

Notes

Expected RWP to be used for 08.2 License Class is –

- RWP - 0001
- Dose ALARM – 5 mr
- Dose RATE ALARM- 20 mr/hr

PERFORMANCE CHECKLIST

Notes to the Evaluator

- Task critical elements are bolded and noted by the words “Critical Step” at the end of the step.
- **START TIME:**

STEP 1: **Reviews the NOTE prior to Step 15 and notes that Step 15 sub-steps ‘a’ through ‘c’ are signed off.** **STANDARD:** • Reads note regarding the fact that FRs may now be implemented. • Notes that Step 15 sub-steps ‘a’ through ‘c’ are complete. **EVALUATOR’S NOTE:** • This item is not related to the task directed to be performed. **COMMENTS:**	_____ **SAT** _____ **UNSAT**

STEP 2:

STEP 15d- Locally close CHG crosstie valves:

- **1-CH-728**

_____ **SAT**

_____ **UNSAT**

STANDARD:

(a) Proceeds to Auxiliary Building Basement Unit 1 side of Aux Bldg.
(b) Locates 1-CH-728 (see location sketch).
(c) Places the ratchet selector in the DOWN position (rotates selector lever clockwise until bottom stop reached). This is a Critical Step.
(d) Closes 1-CH-728 by "ratcheting" the valve handwheel to turn the valve handwheel in the clockwise direction. This is a Critical Step.

EVALUATOR'S NOTE:

- **If asked:** The valve ratchet selector is in the UP position and the valve is currently open (valve stem is extended).
- **Tell operator:** If operator attempts to reposition valve with ratchet selector in the UP position, as he/she pushes up on handwheel, it will not move since valve is open. If the operator pushes DOWN on handwheel, it will "click".
- **Tell operator:** AFTER moving ratchet selector to DOWN position, handwheel "clicks" as it is moved up & valve moves clockwise & begins closing as handwheel is pushed down.
- **Tell operator:** When 1-CH-728 properly operated, tell operator that flow noise is no longer heard through the line.
- **When properly operated:** Valve stem retracts in, operator ratchets the valve until valve no longer travels and flow noise is no longer heard.

Area location sketch:

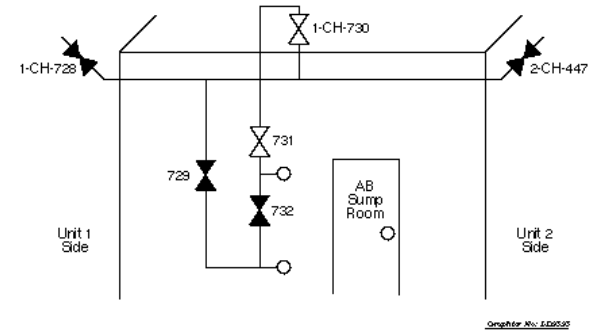

In order to close 1-CH-728, the ratchet selector must be in the DOWN position. The ratchet selector in the UP direction opens 1-CH-728.

COMMENTS:

STEP 3:

STEP 15d- Locally close CHG crosstie valves (continued):

- **2-CH-447**

_____ **SAT**

_____ **UNSAT**

STANDARD:

(a) Proceeds to Auxiliary Building Basement Unit 2 side.
(b) Locates 2-CH-447 (see location sketch).
(c) Closes 2-CH-447 (by turning valve handwheel in the clockwise direction). This is a Critical Step.

EVALUATOR'S NOTE:

- **If asked:** The valve is currently open (valve stem is extended).
- **When correctly operated:** Handwheel rotates, stem retracts in and then the handwheel stops.

Area location sketch:

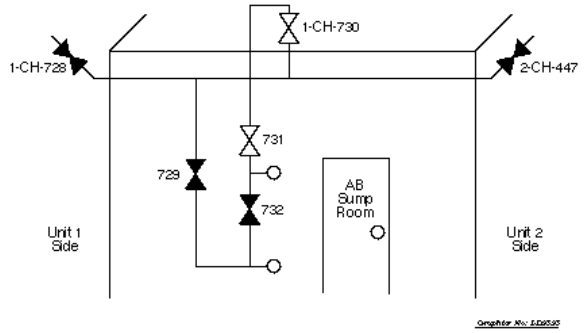

COMMENTS:

STEP 4: ***STEP 15e***- Locally open CHG line valve: • **2-CH-304** **STANDARD:** (a) Proceeds to Auxiliary Building Basement Unit 2 side. (b) Locates 2-CH-304 (located near 2-CH-LCV-2122) **(c) Opens 2-CH-304 (by turning valve handwheel in the clockwise direction). This is a Critical Step.** **EVALUATOR'S NOTE:** • **If asked:** The valve is currently open (valve stem is extended). • **When correctly operated:** Handwheel rotates, stem retracts in and then the handwheel stops. **COMMENTS:**	_____ **SAT** _____ **UNSAT**

STEP 5: Reports completion of the Step to the Shift Manager. **STANDARD:** • Verbal status report that charging crosstie from Unit 1 to Unit 2 has been locally secured in accordance with 2-ECA-0.2. **EVALUATOR'S NOTE:** • Acknowledge the completion of the task. **COMMENTS:**	_____ **SAT** _____ **UNSAT**

STOP TIME:

_____

_____

_____

_____

_____

_____

_____

_____

_____

_____

_____

_____

_____

_____

_____

_____

_____

_____

Operator Directions Handout
(TO BE READ TO APPLICANT BY EXAMINER)

Task

- Task is to be SIMULATED in the plant.
- Secure Charging Crosstie in accordance with 2-ECA-0.2, Loss of All AC Power Recovery with SI Required, Step 15.

Directions

The evaluator will explain the initial conditions of the task to be performed and will provide the initiating cue. Ensure you indicate to the evaluator when you understand your assigned task.

Initial Conditions

- A Loss of Offsite Power has occurred on Unit 2 and power has subsequently been restored to Unit 2. The team has completed 2-ECA-0.0 (Loss of All A/C Power) and transitioned to 2-ECA-0.2 (Loss of All AC Power Recovery with SI Required) and are currently performing Step 15 (Check if Charging Crosstie Can Be Isolated) of 2-ECA-0.2.

Initiating Cues

- This task is to be SIMULATED. Do NOT turn switches, manipulate controls or reposition valves.
- I am the Shift Manager. Unit 2 had experienced a loss of offsite power and charging crosstie from Unit 1 to Unit 2 was utilized for RCS makeup.
- Following the restoration of power to Unit 2, the team transitioned to 2-ECA-0.2, Loss of All AC Power Recovery with SI Required.
- The team has reached step 15 of 2-ECA-0.2, Loss of All AC Power Recovery with SI Required.
- You are to perform step 15 sub-steps d and e.
- When you finish the actions necessary to accomplish this, please inform me.

Operator Directions Handout
(TO BE GIVEN TO APPLICANT)

Initial Conditions

- A Loss of Offsite Power has occurred on Unit 2 and power has subsequently been restored to Unit 2. The team has completed 2-ECA-0.0 (Loss of All A/C Power) and transitioned to 2-ECA-0.2 (Loss of All AC Power Recovery with SI Required) and are currently performing Step 15 (Check if Charging Crosstie Can Be Isolated) of 2-ECA-0.2.

Initiating Cues

- This task is to be SIMULATED. Do NOT turn switches, manipulate controls or reposition valves.
- I am the Shift Manager. Unit 2 had experienced a loss of offsite power and charging crosstie from Unit 1 to Unit 2 was utilized for RCS makeup.
- Following the restoration of power to Unit 2, the team transitioned to 2-ECA-0.2, Loss of All AC Power Recovery with SI Required.
- The team has reached step 15 of 2-ECA-0.2, Loss of All AC Power Recovery with SI Required.
- You are to perform step 15 sub-steps d and e.
- When you finish the actions necessary to accomplish this, please inform me.

STEP	ACTION/EXPECTED RESPONSE	RESPONSE NOT OBTAINED
	NOTE: FRs may now be implemented as necessary.	
15. ___	CHECK IF CHG CROSSTIE CAN BE ISOLATED:	
	☑ a) Check Unit 2 CHG pump - RUNNING	☐ a) GO TO Step 16. WHEN Unit 2 CHG pump running, THEN do Steps 15b through 15e.
	☑ b) CHG crosstie - IN SERVICE	☐ b) GO TO Step 16.
	c) Close CHG line isolation MOV(s):	
	☑ • 2-CH-MOV-2289A	
	☑ • 2-CH-MOV-2289B	
	d) Locally close CHG crosstie valves:	
	☐ • 1-CH-728	
	☐ • 2-CH-447	
	e) Locally open CHG line valve:	
	☐ • 2-CH-304	
16. ___	GO TO 2-E-1, LOSS OF REACTOR OR SECONDARY COOLANT	

- END -

U.S. Nuclear Regulatory Commission
Surry Power Station

SR10301
Job Performance Measure EPE029EA1.12
Alternate Path

Applicant_____ Start Time_____

Examiner_____

Date _____ Stop Time_____

Title

Locally Trip Unit 1 Reactor.

K/A: EPE029EA1.12: Ability to operate and monitor the following as they apply to a ATWS: M/G set power supply and reactor trip breakers.

Applicability	**Estimated Time**	**Actual Time**
RO/SRO(I)	10 Minutes	

Initial Conditions

- Task is to be SIMULATED in the plant.
- An Anticipated Transient Without Scram (ATWS) is in progress on Unit 1 with a coincident failure of both bench board reactor trip push buttons. The operating team has entered FR-S.1, Response to Nuclear Power Generation/ATWS.
- A local trip of the reactor is required. You have been directed to open Unit 1 reactor trip breakers locally in accordance with FR-S.1 Step 8.a RNO.

Standards

- Candidate opens Unit 1 Motor Generator Breakers and de-energizes power to the Rod Control System.

Initiating Cues

- This task is to be SIMULATED. Do NOT turn switches, manipulate controls or reposition valves.
- I am the Shift Manager. UNIT 1 is currently experiencing an ATWS and the control room reactor trip push buttons won't work.
- I need you to locally trip the UNIT 1 reactor trip breakers in accordance with FR-S.1 Step 8.a RNO.
- When you finish the actions necessary to accomplish this, please inform me.

Terminating Cues

- Unit 1 Motor Generator Breakers are open.

Procedures

- FR-S.1, Response to Nuclear Power Generation/ATWS (Revision 26).

Tools and Equipment

- None

Safety Considerations

- Standard Personal Safety Equipment

Notes to the Evaluator.

- **Task briefing should occur in the pre-determined location.**
- This task is to be SIMULATED. Do NOT allow the operator to manipulate controls, operate switches or reposition valves.
- Task critical elements are bolded and noted by the words “Critical Step” at the end of the step.

Initiating Cues

- This task is to be SIMULATED. Do NOT turn switches, manipulate controls or reposition valves.
- I am the Shift Manager. UNIT 1 is currently experiencing an ATWS and the control room reactor trip push buttons won't work.
- I need you to locally trip the UNIT 1 reactor trip breakers in accordance with FR-S.1 Step 8.a RNO.
- When you finish the actions necessary to accomplish this, please inform me.

Notes

When the candidate attempts to open the Unit 1 Reactor Trip Breakers, the candidate will find that the reactor trip breakers cannot be manipulated. Upon report of this condition to the Control Room / Shift Manager, the evaluator will provide direction to open the MG set output breakers in accordance with FR-S.1 Step 8.a RNO.

PERFORMANCE CHECKLIST

Notes to the Evaluator

- Task critical elements are bolded and noted by the words "Critical Step" at the end of the step.
- **START TIME:**

STEP 1: **Step 8.a RNO –** Send operator to locally trip Reactor: • Open reactor trip and bypass breakers OR • Open the MG set output breakers. o GEN NO. 1 o GEN NO. 2 **STANDARD:** a) Locates Unit 1 Reactor Trip and Bypass Breakers. b) Attempts to open Unit 1 Reactor Trip Breaker A (RTB A) by depressing the TRIP push button on the breaker. **EVALUATOR'S NOTE:** a) Proceeds to Unit 1 Cable Spreading Area (between the Pzr Acc monitor cabinet and the ASC/RMP panels) and enters the Reactor Trip Breaker cubicle. b) If asked: • Prior to breaker manipulation, the CLOSED indication is showing (i.e., the breaker is "as you see it"). • Following the breaker manipulation, no breaker movement is seen or heard and the CLOSED indication is showing (i.e., the breaker is "as you see it"). • The 'A' Reactor Trip Bypass Breaker has the OPEN indication showing (i.e., the breaker is "as you see it"). **COMMENTS:**	_____ **SAT** _____ **UNSAT**

STEP 2: **Step 8.a RNO – (continued)** Send operator to locally trip Reactor: • Open reactor trip and bypass breakers OR • Open the MG set output breakers. o GEN NO. 1 o GEN NO. 2 **STANDARD:** a) Attempts to open Unit 1 Reactor Trip Breaker B (RTB B) by depressing the TRIP push button on the breaker. b) Acknowledges that both of the Reactor Trip Breakers will NOT open locally. **EVALUATOR'S NOTE:** a) If asked: • Prior to breaker manipulation, the CLOSED indication is showing (i.e., the breaker is "as you see it"). • Following the breaker manipulation, no breaker movement is seen or heard and the CLOSED indication is showing (i.e., the breaker is "as you see it"). • The 'B' Reactor Trip Bypass Breaker has the OPEN indication showing (i.e., the breaker is "as you see it"). **<u>ADDITIONAL DIRECTION TO BE PROVIDED TO CANDIDATE:</u>** b) Upon identification of the failure of the reactor trip breakers to be opened, provide the following direction to the candidate, as necessary. • I need you to locally trip the UNIT 1 MG SET OUTPUT BREAKERS in accordance with FR-S.1 Step 8.a RNO. • When you finish the actions necessary to accomplish this, please inform me. **COMMENTS:**	_____ **SAT** _____ **UNSAT**

STEP 3: **Step 8.a RNO – (continued)** Send operator to locally trip Reactor: • Open reactor trip and bypass breakers OR • **Open the MG set output breakers.** o **GEN NO. 1** o **GEN NO. 2** **STANDARD:** a) Locates Unit 1 MG Set Output Breakers. **b) Trips one of the Unit 1 MG Set Output Breakers by either of the following:** • **Operating the breaker mounted trip mechanism (pushes the TRIP push button)** • **Rotates the Generator Control pistol-grip switch to the TRIP position.** **This is a Critical Step.** **EVALUATOR'S NOTE:** a) Proceeds to the MG Set Control Panel (center of Unit 1 4160V Switchgear Room) and locates the MG Set Output Breakers (at bottom of panel). b) If asked: • Both MG Sets are operating. • Prior to breaker manipulation, the CLOSED indication is showing (i.e., the breaker is "as you see it"). • When properly operated, the MG Set Output Breaker indication changes from CLOSED to OPEN and breaker opening noise is heard. **COMMENTS:**	_____ **SAT** _____ **UNSAT**

STEP 4: **Step 8.a RNO – (continued)** Send operator to locally trip Reactor: • Open reactor trip and bypass breakers OR • **Open the MG set output breakers.** o **GEN NO. 1** o **GEN NO. 2** **STANDARD:** **a) Trips the other Unit 1 MG Set Output Breakers by either of the following:** • **Operating the breaker mounted trip mechanism (pushes the TRIP push button)** • **Rotates the Generator Control pistol-grip switch to the TRIP position.** **This is a Critical Step.** **EVALUATOR'S NOTE:** a) If asked: • Prior to breaker manipulation, the CLOSED indication is showing (i.e., the breaker is "as you see it"). • When properly operated, the MG Set Output Breaker indication changes from CLOSED to OPEN and breaker opening noise is heard. **COMMENTS:**	_____ **SAT** _____ **UNSAT**

STEP 5: Reports completion of the Step to the Shift Manager. **STANDARD:** • Verbal status report that Unit 1 MG Breakers have been opened. **EVALUATOR'S NOTE:** • Acknowledge the completion of the task. **COMMENTS:**	_____ **SAT** _____ **UNSAT**

STOP TIME:

_____

_____

_____

_____

_____

_____

_____

_____

_____

_____

_____

_____

_____

_____

_____

_____

_____

Operator Directions Handout
(TO BE READ TO APPLICANT BY EXAMINER)

Task

- Task is to be SIMULATED in the plant.
- A local trip of the reactor is required. The Candidate has been directed to open Unit 1 reactor trip breakers locally in accordance with FR-S.1 Step 8.a RNO.

Directions

The evaluator will explain the initial conditions of the task to be performed and will provide the initiating cue. Ensure you indicate to the evaluator when you understand your assigned task.

Initial Conditions

- An Anticipated Transient Without Scram (ATWS) is in progress on Unit 1 with a coincident failure of both bench board reactor trip push buttons. The operating team has entered FR-S.1, Response to Nuclear Power Generation/ATWS.

Initiating Cues

- This task is to be SIMULATED. Do NOT turn switches, manipulate controls or reposition valves.
- I am the Shift Manager. UNIT 1 is currently experiencing an ATWS and the control room reactor trip push buttons won't work.
- I need you to locally trip the UNIT 1 reactor trip breakers in accordance with FR-S.1 Step 8.a RNO.
- When you finish the actions necessary to accomplish this, please inform me.

Operator Directions Handout
(TO BE GIVEN TO APPLICANT)

Initial Conditions

- An Anticipated Transient Without Scram (ATWS) is in progress on Unit 1 with a coincident failure of both bench board reactor trip push buttons. The operating team has entered FR-S.1, Response to Nuclear Power Generation/ATWS.

Initiating Cues

- This task is to be SIMULATED. Do NOT turn switches, manipulate controls or reposition valves.
- I am the Shift Manager. UNIT 1 is currently experiencing an ATWS and the control room reactor trip push buttons won't work.
- I need you to locally trip the UNIT 1 reactor trip breakers in accordance with FR-S.1 Step 8.a RNO.
- When you finish the actions necessary to accomplish this, please inform me.

STEP	ACTION/EXPECTED RESPONSE	RESPONSE NOT OBTAINED
8. ___	CHECK IF THE FOLLOWING TRIPS HAVE OCCURRED:	
	☐ a) Reactor trip	a) Send operator to locally trip Reactor: ☐ • Open reactor trip and bypass breakers. OR • Open the MG set output breakers. ☐ • GEN NO. 1 ☐ • GEN NO. 2
	☐ b) Turbine trip	☐ b) Send operator to locally trip turbine using trip lever.

NOTE: If adverse CTMT conditions have been exceeded, the Gamma-Metrics Excore Neutron Monitor system (Source and Wide Ranges) should be used to monitor neutron flux for the duration of the event.

*9. ___	CHECK REACTOR - SUBCRITICAL	
	☐ a) Check power range channels - LESS THAN 5% [Gamma-Metrics Wide Range Power - LESS THAN 5%]	☐ a) GO TO Step 10.
	☐ b) Check Intermediate range channels - NEGATIVE STARTUP RATE [Gamma-Metrics Wide Range Power - DECREASING]	☐ b) GO TO Step 10.
	☐ c) GO TO Step 18	

U.S. Nuclear Regulatory Commission
Surry Power Station

SR10301
Job Performance Measure 008.A2.02

Applicant_____ Start Time_____

Examiner_____

Date _____ Stop Time_____

Title

Fill the CC Head Tank using 1-BC-P-2.

K/A: 008.A2.02: Ability to (a) predict the impacts of the following malfunctions or operations on the CCWS, and (b) based on those predictions, use procedures to correct, control, or mitigate the consequences of those malfunctions or operations: High/low surge tank level.

Applicability	**Estimated Time**	**Actual Time**
RO/SRO(I)	15 Minutes	

Initial Conditions

- Task is to be SIMULATED in the plant.
- An adverse trend was identified on the CC Head Tank and a CC leak was identified and subsequently isolated. The CC Head Tank level is low and needs to be filled; current level is 30%.
- The Water Treatment (WT) makeup header is not available to supply water to the CC Head Tank.
- It is desired to fill the CC Head Tank to 50% using 1-BC-P-2 in accordance with 0-OP-BC-001.

Standards

- Candidate correctly manipulates valves, starts 1-BC-P-2 in accordance with 0-OP-BC-001 and fills the CC Head Tank.

Initiating Cues

- This task is to be SIMULATED. Do NOT turn switches, manipulate controls or reposition valves.
- I am the Shift Manager. An adverse trend was identified on the CC Head Tank and a CC leak was identified and subsequently isolated.
- The CC Head Tank level is low and needs to be filled; current level is 30%.
- Water Treatment (WT) makeup header is not available to supply water to the CC Head Tank.
- You are to fill the CC Head Tank to 50% using 1-BC-P-2 in accordance with 0-OP-BC-001, Operation of 1-BC-P-2.
- When you finish the actions necessary to accomplish this, please inform me.

Terminating Cues

- The CC Head Tank has been filled to the desired level (50%).

Procedures

- 0-OP-BC-001, Operation of 1-BC-P-2 (Revision 7), Subsections 5.1, 5.2, and 5.4.

Tools and Equipment

- None

Safety Considerations

- Standard Personal Safety Equipment

Notes to the Evaluator.

- **Task briefing should occur in the pre-determined location.**
- This task is to be SIMULATED. Do NOT allow the operator to manipulate controls, operate switches or reposition valves.
- Task critical elements are bolded and noted by the words "Critical Step" at the end of the step.

Initiating Cues

- This task is to be SIMULATED. Do NOT turn switches, manipulate controls or reposition valves.
- I am the Nuclear Shift Manager. An adverse trend was identified on the CC Head Tank and a CC leak was identified and subsequently isolated.
- The CC Head Tank level is low and needs to be filled; current level is 30%.
- Water Treatment (WT) makeup header is not available to supply water to the CC Head Tank.
- You are to fill the CC Head Tank to 50% using 1-BC-P-2 in accordance with 0-OP-BC-001, Operation of 1-BC-P-2.
- When you finish the actions necessary to accomplish this, please inform me.

Notes

PERFORMANCE CHECKLIST

Notes to the Evaluator

- Task critical elements are bolded and noted by the words "Critical Step" at the end of the step.
- **START TIME:**

STEP 1: **Reviews procedure Section 3.0, Initial Conditions, and Section 4.0, Precautions and Limitations.** 3.0 Initial Conditions None 4.0 Precautions and Limitations 4.1 Push button station 1-BS-CS-P2, BC M/U Pump Control Switch, is mounted on the vertical beam near the pump. 4.2 Because the LCVs for 1-CD-TK-1A, 1-CD-TK-1B, and 2-CD-TK-1, Chilled Water Surge Tanks, are not reliable, makeup is done using the LCV Bypass. 4.3 The BC flow path is normally aligned from 1-BC-P-2 to Unit 1 BC System and to Unit 2 BC System. Starting 1-BC-P-2 will fill the head tanks if required. 4.4 The following equipment will be required if performing Subsection 5.9: • Red rubber hose (100 ft) with Chicago fittings on both ends • Five gallon bucket **STANDARD:** • Reviews procedure Section 3.0, Initial Conditions, and Section 4.0, Precautions and Limitations. **EVALUATOR'S NOTE:** • The candidate will only utilize Subsection 5.1, 5.2, and 5.4. • If the candidate looks at the local CC Head Tank Level indication (by ESGR entry doors) indicate level at 30%. **COMMENTS:**	_____ **SAT** _____ **UNSAT**

STEP 2: ***Section 5.4 – Filling the CC Surge Tank*** ***Step 5.4.1***- Verify started or start 1-BC-P-2 IAW Subsection 5.1. Enter N/A if filling from the WT makeup header. **STANDARD:** a) Proceeds to procedure Subsection 5.4 and performs Step 5.4.1 which directs performance of Section 5.1, if not already performed. **EVALUATOR'S NOTE:** a) **If asked:** The WT makeup header is not available for makeup to the CC Head Tank, use 1-BC-P-2. Based on the directions, it is acceptable for the candidate to commence with Subsection 5.1. **COMMENTS:**	_____ **SAT** _____ **UNSAT**

STEP 3: ***Section 5.1 – Starting 1-BC-P-2, BC Alternate M/U Pump*** ***Step 5.1.1***- Verify that 1-BC-253, BC Alt M/U Pump Discharge Hdr Drain, is closed. **STANDARD:** a) Proceeds to Unit 1 Turbine Building Basement. b) Verifies that 1-BC-253 is closed. **EVALUATOR'S NOTE:** a) Proceeds to the west side of Unit 1 Turbine Building Basement between the outlet waterboxes and the Condensate Pumps b) **If asked:** 1-BC-253 is "as you see it". **COMMENTS:**	_____ **SAT** _____ **UNSAT**
STEP 4: ***Section 5.1 – Starting 1-BC-P-2, BC Alternate M/U Pump*** ***Step 5.1.2***- Open 1-BC-177, BC Alt M/U Pump Suct. **STANDARD:** **a) Opens 1-BC-177 by rotating the handwheel in the counter-clockwise direction. This is a Critical Step** **EVALUATOR'S NOTE:** a) **If asked:** • **Prior to valve manipulation** 1-BC-177 is "as you see it" (i.e., closed). • **Following valve manipulation** indicate that 1-BC-177 is OPEN (i.e., valve stem exposed). **COMMENTS:**	_____ **SAT** _____ **UNSAT**

STEP 5: ***Section 5.1 – Starting 1-BC-P-2, BC Alternate M/U Pump*** ***Step 5.1.3***- Open 1-BC-180, BC Alt M/U Pump Recirc Line Isol. **STANDARD:** **a) Opens 1-BC-180 by rotating the handwheel in the counter-clockwise direction. This is a Critical Step** **EVALUATOR'S NOTE:** a) **If asked:** • **Prior to valve manipulation** 1-BC-180 is "as you see it" (i.e., closed). • **Following valve manipulation** indicate that 1-BC-180 is OPEN. **COMMENTS:**	_____ **SAT** _____ **UNSAT**
STEP 6: **Caution prior to Step 5.1.4: Valve 1-BC-179 may require throttling to prevent cavitation when condensate temperature is high.** **STANDARD:** **a) Acknowledges the Caution.** **EVALUATOR'S NOTE:** a) **If asked:** • Throttle 1-BC-179 2 turns open. The operator may decide to throttle 1-BC-179 open until cavitation occurs and then throttle closed on 1-BC-179. **COMMENTS:**	_____ **SAT** _____ **UNSAT**

STEP 7: ***Section 5.1 – Starting 1-BC-P-2, BC Alternate M/U Pump*** ***Step 5.1.4***- Throttle open or open 1-BC-179, BC Alt M/U Pump Disch. **STANDARD:** **a) Throttles open or opens 1-BC-179 by rotating the handwheel in the counter-clockwise direction. This is a Critical Step** **EVALUATOR'S NOTE:** a) **If asked:** • **Prior to valve manipulation** 1-BC-179 is "as you see it" (i.e., closed). • **Following valve manipulation** indicate that 1-BC-179 is OPEN or THROTTLED (stem fully or partially exposed). • Throttle 1-BC-179 2 turns open. The operator may decide to throttle 1-BC-179 open until cavitation occurs and then throttle closed on 1-BC-179. As long as 1-BC-179 was opened to allow flow forward, it is not critical that 1-BC-179 be fully open (i.e., it is acceptable for this valve to be throttled) **COMMENTS:**	_____ **SAT** _____ **UNSAT**
STEP 8: ***Section 5.1 – Starting 1-BC-P-2, BC Alternate M/U Pump*** ***Step 5.1.5***- Start 1-BC-P-2 and verify discharge pressure is stable at approximately 70 to 115 psig as indicated on 1-BC-PI-117, BC Alternate M/U Pump Discharge Press Ind. **STANDARD:** **a) Starts 1-BC-P-2 by depressing the start push button.** **This is a Critical Step.** b) Determines discharge pressure by reading 1-BC-PI-117 to be approximately 95 psig. **EVALUATOR'S NOTE:** a) **If asked:** • **Prior to pump start,** the pump is "as you see it" • **Following pump start,** pump noise is heard and the discharge pressure gage increases from 30 psig to approximately 95 psig. **COMMENTS:**	_____ **SAT** _____ **UNSAT**

STEP 9: ***Section 5.4 – Filling the CC Surge Tank*** ***Step 5.4.1***- Verify started or start 1-BC-P-2 IAW Subsection 5.1. Enter N/A if filling from the WT makeup header. **STANDARD:** a) Notes that 1-BC-P-2 is running. **EVALUATOR'S NOTE:** a) **If asked:** The WT makeup header is not available for makeup to the CC Head Tank, use 1-BC-P-2. **COMMENTS:**	_____ **SAT** _____ **UNSAT**
STEP 10: ***Section 5.4 – Filling the CC Surge Tank*** ***Step 5.4.2***- Notify an Operator in the Main Control Room to monitor CC Surge Tank Level Indicator. **STANDARD:** a) Contacts the Main Control Room and notifies the MCR to monitor CC Surge Tank level. **EVALUATOR'S NOTE:** a) **If asked/contacted:** • Will acknowledge the need to monitor CC Head Tank Level. • Will contact the operator when level approaches 50%. **COMMENTS:**	_____ **SAT** _____ **UNSAT**

STEP 10: ***Section 5.4 – Filling the CC Surge Tank*** ***Step 5.4.3***- Slowly open 1-CN-800, CN M/U to CC Surge Tk Isol. **STANDARD:** **a) Slowly opens 1-CN-800 by rotating the valve in the counter-clockwise direction. It is not necessary to fully open 1-CN-800.** **This is a Critical Step.** **EVALUATOR'S NOTE:** a) **If asked/contacted:** • **Prior to valve manipulation** 1-CN-800 is "as you see it" (i.e., closed). • **Following valve manipulation** indicate that 1-CN-800 is OPEN or THROTTLED (stem fully or partially exposed). • The MCR will note that CC Head Tank Level is increasing. • If after 1-CN-800 is opened and the candidate looks at the local CC Head Tank Level indication (by ESGR entry doors) indicate level increasing. If 1-CN-800 is in a contaminated area, the candidate will NOT enter the contaminated area, but simulate the actions required and valve manipulations. • Contact HP or Supervisor • Verify proper dosimetry requirements with HP or Supervisor • Don the required anti-contamination clothing as directed by HP. **COMMENTS:**	_____ **SAT** _____ **UNSAT**

STEP 11: ***Section 5.4 – Filling the CC Surge Tank*** ***Step 5.4.4***- When the CC Surge Tank is at the desired level, then close 1-CN-800. **STANDARD:** **a) Closes 1-CN-800 by rotating the valve in the clockwise direction. This is a Critical Step.** **EVALUATOR'S NOTE:** a) **If asked/contacted:** • **Contact the operator to indicate CC Head Tank Level is approximately 50%.** • **Following valve manipulation** indicate that 1-CN-800 is CLOSED or "as you see it" (valve stem retracted). • The MCR will note that CC Head Tank Level is stable following the closure of 1-CN-800. • If after 1-CN-800 is closed and the candidate looks at the local CC Head Tank Level indication (by ESGR entry doors) indicate level stable at approximately 50%. If 1-CN-800 is in a contaminated are, the candidate will NOT enter the contaminated area, but simulate the actions required and valve manipulations. • Remove the required anti-contamination clothing as directed by HP. • Perform a frisk, as necessary. **COMMENTS:**	_____ **SAT** _____ **UNSAT**
STEP 12: ***Section 5.4 – Filling the CC Surge Tank*** ***Step 5.4.5***- Stop 1-BC-P-2 IAW Subsection 5.2. Enter N/A if filled from WT makeup header. **STANDARD:** a) Proceeds to procedure Subsection 5.2 to secure 1-BC-P-2. **EVALUATOR'S NOTE: N/A** **COMMENTS:**	_____ **SAT** _____ **UNSAT**

STEP 13: ***Section 5.2 – Stopping 1-BC-P-2, BC Alternate M/U Pump*** ***Step 5.2.1***- After pump run is done, then stop 1-BC-P-2. **STANDARD:** a) Stops 1-BC-P-2 by depressing the stop push button. **EVALUATOR'S NOTE:** a) **If asked:** Discharge pressure decreases to 30 psig after the pump is stopped. **COMMENTS:**	_____ **SAT** _____ **UNSAT**
STEP 14: ***Section 5.2 – Stopping 1-BC-P-2, BC Alternate M/U Pump*** ***Step 5.2.2***- Close 1-BC-179, BC Alt M/U Pump Disch. **STANDARD:** a) Closes 1-BC-179 by rotating the handwheel in the clockwise direction. **EVALUATOR'S NOTE:** a) **If asked:** • **Prior to valve manipulation** 1-BC-179 is OPEN. • **Following valve manipulation** indicate that 1-BC-179 is CLOSED or "as you see it" (valve stem retracted). **COMMENTS:**	_____ **SAT** _____ **UNSAT**
STEP 15: ***Section 5.2 – Stopping 1-BC-P-2, BC Alternate M/U Pump*** ***Step 5.2.3***- Close 1-BC-180, BC Alt M/U Pump Recirc Line Isol. **STANDARD:** a) Closes 1-BC-180 by rotating the handwheel in the clockwise direction. **EVALUATOR'S NOTE:** a) **If asked:** • **Prior to valve manipulation** 1-BC-180 is OPEN. • **Following valve manipulation** indicate that 1-BC-180 is CLOSED or "as you see it". **COMMENTS:**	_____ **SAT** _____ **UNSAT**

STEP 16: ***Section 5.2 – Stopping 1-BC-P-2, BC Alternate M/U Pump*** ***Step 5.2.3***- Close 1-BC-177, BC Alt M/U Pump Suct. **STANDARD:** a) Closes 1-BC-177 by rotating the handwheel in the clockwise direction. **EVALUATOR'S NOTE:** a) **If asked:** • **Prior to valve manipulation** 1-BC-177 is OPEN. • **Following valve manipulation** indicate that 1-BC-177 is CLOSED or "as you see it" (valve stem retracted). **COMMENTS:**	_____ **SAT** _____ **UNSAT**
STEP 17: Reports completion of the Step to the Shift Manager. **STANDARD:** • Verbal status report that the CC Head Tank was filled with 1-BC-P-2. **EVALUATOR'S NOTE:** • Acknowledge the completion of the task. **COMMENTS:**	_____ **SAT** _____ **UNSAT**

STOP TIME:

_____

_____

_____

_____

_____

_____

_____

_____

_____

_____

Operator Directions Handout
(TO BE READ TO APPLICANT BY EXAMINER)

Task

- Task is to be SIMULATED in the plant.
- Fill the CC Head Tank to 50% using 1-BC-P-2 in accordance with 0-OP-BC-001.

Directions

The evaluator will explain the initial conditions of the task to be performed and will provide the initiating cue. Ensure you indicate to the evaluator when you understand your assigned task.

Initial Conditions

- An adverse trend was identified on the CC Head Tank and a CC leak was identified and subsequently isolated. The CC Head Tank level is low and needs to be filled; current level is 30%.
- The Water Treatment (WT) makeup header is not available to supply water to the CC Head Tank.

Initiating Cues

- This task is to be SIMULATED. Do NOT turn switches, manipulate controls or reposition valves.
- I am the Shift Manager. An adverse trend was identified on the CC Head Tank and a CC leak was identified and subsequently isolated.
- The CC Head Tank level is low and needs to be filled; current level is 30%.
- Water Treatment (WT) makeup header is not available to supply water to the CC Head Tank.
- You are to fill the CC Head Tank to 50% using 1-BC-P-2 in accordance with 0-OP-BC-001, Operation of 1-BC-P-2.
- When you finish the actions necessary to accomplish this, please inform me.

Operator Directions Handout
(TO BE GIVEN TO APPLICANT)

Initial Conditions

- An adverse trend was identified on the CC Head Tank and a CC leak was identified and subsequently isolated. The CC Head Tank level is low and needs to be filled; current level is 30%.
- The Water Treatment (WT) makeup header is not available to supply water to the CC Head Tank.

Initiating Cues

- This task is to be SIMULATED. Do NOT turn switches, manipulate controls or reposition valves.
- I am the Shift Manager. An adverse trend was identified on the CC Head Tank and a CC leak was identified and subsequently isolated.
- The CC Head Tank level is low and needs to be filled; current level is 30%.
- Water Treatment (WT) makeup header is not available to supply water to the CC Head Tank.
- You are to fill the CC Head Tank to 50% using 1-BC-P-2 in accordance with 0-OP-BC-001, Operation of 1-BC-P-2.
- When you finish the actions necessary to accomplish this, please inform me.

Dominion	PROCEDURE NO: 0-OP-BC-001
SURRY POWER STATION	REVISION NO: 7
PROCEDURE TYPE: **OPERATING PROCEDURE**	UNIT NO: **1 & 2**
PROCEDURE TITLE: **OPERATION OF 1-BC-P-2**	

REVISION SUMMARY:

Revised in response to CR 317052 (OP FB 09-0140):

- Added Subsection 5.9 for flushing piping tunnel sump pump discharge using 1-BC-P-2.
- Added Precaution 4.4 to list equipment required for performing Subsection 5.9.

COMMON

PROCEDURE USED:	☐ Entirely	☐ Partially	**Note:** If used partially, note reasons in remarks.
PROBLEMS ENCOUNTERED:	☐ NO	☐ YES	**Note:** If YES, note problems in remarks.

REMARKS: _____

_____

_____

_____

_____

_____ (Use back for additional remarks.)

SHIFT SUPERVISION:	DATE:

CONTINUOUS USE

TABLE OF CONTENTS

Section		Page
1.0	PURPOSE	3
2.0	REFERENCES	3
3.0	INITIAL CONDITIONS	4
4.0	PRECAUTIONS AND LIMITATIONS	4
5.0	INSTRUCTIONS	5
5.1	Starting 1-BC-P-2, BC Alternate M/U Pump	5
5.2	Stopping 1-BC-P-2, BC Alternate M/U Pump	6
5.3	Operation Of 1-BC-P-2 For Washing Unit 2 Turbine Building Components	7
5.4	Filling the CC Surge Tank	8
5.5	Filling 2-CD-TK-1, Chilled Water Surge Tank	9
5.6	Filling 1-CD-TK-1A, Chilled Water Surge Tank	10
5.7	Filling 1-CD-TK-1B, Chilled Water Surge Tank	11
5.8	Using 1-BC-P-2 With the Hose Connection	12
5.9	Flushing of Piping Tunnel Sump Pump Discharge Using 1-BC-P-2	14

1.0 PURPOSE

1.1 To provide instructions for the operation of 1-BC-P-2, BC Alternate Makeup Pump. **(Ref. 2.4.1)**

2.0 REFERENCES

2.1 Source Documents

2.1.1 UFSAR Section 10.3.9, Bearing Cooling Water System

2.2 Technical Specifications Surry Power Station Units 1 and 2

None

2.3 Technical Documents

2.3.1 11448-FM-73A, Bearing Cooling Water System (Sheet 1 of 2)

2.3.2 11548-FM-73A, Bearing Cooling Water System (Sheet 1 of 1)

2.3.3 11448-FM-067A, Condensate System (Sheet 1 of 2)

2.3.4 11448-FM-072D, Component Cooling Water System (Sheet 1 of 5)

2.3.5 11448-FM-072H, Component Cooling Water System (Sheet 1 of 1)

2.3.6 11548-FM-072D, Component Cooling Water System (Sheet 1 of 1)

2.4 Commitment Documents

2.4.1 PI S-2001-0080, Develop Procedure for the Operation of 1-BC-P-2

Init **Verif**

3.0 INITIAL CONDITIONS

None

4.0 PRECAUTIONS AND LIMITATIONS

4.1 Push button station 1-BC-CS-P2, BC M/U Pump Control Switch, is mounted on the vertical beam near the pump.

4.2 Because the LCVs for 1-CD-TK-1A, 1-CD-TK-1B, and 2-CD-TK-1, Chilled Water Surge Tanks, are not reliable, makeup is done using the LCV Bypass.

4.3 The BC flow path is normally aligned from 1- BC-P-2 to Unit 1 BC System and to Unit 2 BC System. Starting 1-BC-P-2 will fill the head tanks if required.

4.4 The following equipment will be required for performing Subsection 5.9:

- Red rubber hose (100 ft) with Chicago fittings on both ends
- Five gallon bucket

Init Verif

5.0 INSTRUCTIONS

5.1 Starting 1-BC-P-2, BC Alternate M/U Pump

_____ 5.1.1 Verify that 1-BC-253, BC Alt M/U Pump Disch Hdr Drain, is closed.

_____ 5.1.2 Open 1-BC-177, BC Alt M/U Pump Suct.

_____ 5.1.3 Open 1-BC-180, BC Alt M/U Pump Recirc Line Isol.

CAUTION

Valve 1-BC-179 may require throttling to prevent cavitation when condensate temperature is high.

_____ 5.1.4 Throttle open or open 1-BC-179, BC Alt M/U Pump Disch.

_____ 5.1.5 Start 1-BC-P-2 and verify discharge pressure is stable at approximately 70 to 115 psig as indicated on 1-BC-PI-117, BC Alternate M/U Pump Disch Press Ind.

Performed by: _____ _____ _____ _____
Signature Initial Print Date

_____ _____ _____ _____
Signature Initial Print Date

5.2 Stopping 1-BC-P-2, BC Alternate M/U Pump

_____ 5.2.1 AFTER pump run is done, THEN stop 1-BC-P-2.

_____ 5.2.2 Close 1-BC-179, BC Alt M/U Pump Disch.

_____ 5.2.3 Close 1-BC-180, BC Alt M/U Pump Recirc Line Isol.

_____ 5.2.4 Close 1-BC-177, BC Alt M/U Pump Suct.

Performed by: _____ _____ _____ _____
Signature Initial Print Date

_____ _____ _____ _____
Signature Initial Print Date

5.3 Operation Of 1-BC-P-2 For Washing Unit 2 Turbine Building Components

_____ 5.3.1 Get a suitable hose and attach to 2-BC-436, Unit 1 BC Pump 2 M/U to Unit 2 BC Hdr Vent. (Consider length of hose necessary to reach component to be washed.)

_____ 5.3.2 Coordinate with Maintenance personnel and run hose to component to be washed.

_____ 5.3.3 Start 1-BC-P-2, BC Alternate M/U Pump, IAW Subsection 5.1.

_____ 5.3.4 Coordinate with Maintenance Personnel and open 2-BC-436 to begin washing.

5.3.5 WHEN washing is complete, THEN do the following:

_____ a. Stop 1-BC-P-2 IAW Subsection 5.2.

_____ b. Close 2-BC-436.

_____ 5.3.6 IF additional components will be washed, THEN RETURN TO Step 5.3.2. Otherwise, enter N/A.

_____ 5.3.7 Remove hose from 2-BC-436.

Performed by: _____ _____ _____ _____
Signature Initial Print Date

_____ _____ _____ _____
Signature Initial Print Date

5.4 Filling the CC Surge Tank

_____ 5.4.1 Verify started or start 1-BC-P-2 IAW Subsection 5.1. Enter N/A if filling from WT makeup header.

_____ 5.4.2 Notify an Operator in the Main Control Room to monitor the CC Surge Tank level indicator.

_____ 5.4.3 Slowly open 1-CN-800, CN M/U to CC Surge Tk Isol.

_____ 5.4.4 WHEN the CC Surge Tank is at the desired level, THEN close 1-CN-800.

_____ 5.4.5 Stop 1-BC-P-2 IAW Subsection 5.2. Enter N/A if filled from WT makeup header.

Performed by: _____ _____ _____ _____
Signature Initial Print Date

_____ _____ _____ _____
Signature Initial Print Date

5.5 Filling 2-CD-TK-1, Chilled Water Surge Tank

_____ 5.5.1 Verify started or start 1-BC-P-2 IAW Subsection 5.1.

_____ 5.5.2 Monitor the level and open 2-CD-248, CD Surge TK-1 LCV-204 Byp.

_____ 5.5.3 WHEN the CD Surge Tank is at the desired level, THEN close 2-CD-248.

_____ 5.5.4 Stop 1-BC-P-2 IAW Subsection 5.2.

Performed by: _____ _____ _____ _____
Signature Initial Print Date

_____ _____ _____ _____
Signature Initial Print Date

5.6 Filling 1-CD-TK-1A, Chilled Water Surge Tank

_____ 5.6.1 Verify started or start 1-BC-P-2 IAW Subsection 5.1.

_____ 5.6.2 Monitor the level and open 1-CD-372, CD Surge TK-1A M/U LCV-104A Byp.

_____ 5.6.3 WHEN the CD Surge Tank is at the desired level, THEN close 1-CD-372.

_____ 5.6.4 Stop 1-BC-P-2 IAW Subsection 5.2.

Performed by: _____ _____ _____ _____
Signature Initial Print Date

_____ _____ _____ _____
Signature Initial Print Date

5.7 Filling 1-CD-TK-1B, Chilled Water Surge Tank

_____ 5.7.1 Verify started or start 1-BC-P-2 IAW Subsection 5.1.

_____ 5.7.2 Monitor the level and open 1-CD-398, CD Surge TK-1B M/U LCV-104B Byp.

_____ 5.7.3 WHEN the CD Surge Tank is at the desired level, THEN close 1-CD-398.

_____ 5.7.4 Stop 1-BC-P-2 IAW Subsection 5.2.

Performed by: _____ _____ _____ _____
Signature Initial Print Date

_____ _____ _____ _____
Signature Initial Print Date

5.8 Using 1-BC-P-2 With the Hose Connection

_____ 5.8.1 Get a suitable hose and attach to one of the following:

____ 1-BC-454, BC Alt M/U Pump Discharge Drain

____ 1-BC-455, BC Alt M/U Pump Discharge Drain

_____ 5.8.2 Open 1-BC-177, BC Alt M/U Pump Suct.

_____ 5.8.3 Open 1-BC-180, BC Alt M/U Pump Recirc Line Isol.

_____ 5.8.4 Start 1-BC-P-2 and verify discharge pressure is stable at approximately 70 to 115 psig as indicated on 1-BC-PI-117, BC Alternate M/U Pump Disch Press Ind.

_____ 5.8.5 Open 1-BC-253, BC Alt M/U Pump Discharge Drain.

CAUTION

Valve 1-BC-454 or 1-BC-455 may require throttling to prevent cavitation when condensate temperature is high.

_____ 5.8.6 Throttle open or open the valve selected in Step 5.8.1.

____ 1-BC-454, BC Alt M/U Pump Discharge Drain

____ 1-BC-455, BC Alt M/U Pump Discharge Drain

_____ 5.8.7 WHEN hose connection use is no longer required, THEN close or verify closed both of the following valves.

____ 1-BC-454, BC Alt M/U Pump Discharge Drain

____ 1-BC-455, BC Alt M/U Pump Discharge Drain

_____ 5.8.8 Close 1-BC-253, BC Alt M/U Pump Discharge Drain.

_____ 5.8.9 Stop 1-BC-P-2.

_____ 5.8.10 Close 1-BC-180, BC Alt M/U Pump Recirc Line Isol.

_____ 5.8.11 Close 1-BC-177, BC Alt M/U Pump Suct.

_____ 5.8.12 IF hose use is no longer required, THEN remove and properly store hose. Otherwise, enter N/A.

Performed by: _____ _____ _____ _____
Signature Initial Print Date

_____ _____ _____ _____
Signature Initial Print Date

5.9 Flushing of Piping Tunnel Sump Pump Discharge Using 1-BC-P-2

_____ 5.9.1 Place red rubber hose under CC heat exchangers from 1-BC-P-2 to the sump pump pit.

_____ 5.9.2 Unplug sump pump and uncouple the sump pump discharge line.

_____ 5.9.3 Connect red rubber hose to the pump and the discharge line for the sump that goes to the floor drain.

NOTE: Pushbutton station 1-BC-CS-P2, BC M/U Pump Control Switch, is mounted on vertical beam near the pump.

_____ 5.9.4 Verify open or open 1-BC-253, BC Alt M/U Pump Disch Hdr Drain.

_____ 5.9.5 Open 1-BC-177, BC Alt M/U Pump Suct.

_____ 5.9.6 Open 1-BC-180, BC Alt M/U Pump Recirc Line Isol.

_____ 5.9.7 Throttle open 1-BC-455, BC Alt M/U Pump Discharge Drain.

_____ 5.9.8 Start 1-BC-P-2.

NOTE:
- Max flush time is <u>two minutes</u> to protect integrity of discharge PVC piping.
- Discharge line is in drain by #1 Demin.

_____ 5.9.9 Open 1-BC-455. Check volume of water being discharged to verify line is clear.

_____ 5.9.10 After approximately two minutes, secure pump.

_____ 5.9.11 Carefully remove discharge line and allow water to drain into sump pump pit.

_____ 5.9.12 Reconnect red rubber hose to discharge of the sump pump line going into the pit.

_____ 5.9.13 Start 1-BC-P-2.

_____ 5.9.14 AFTER pump has run for 30 seconds, THEN secure 1-BC-P-2.

_____ 5.9.15 Close the following valves. (✓)

____ 1-BC-253, BC Alt M/U Pump Disch Hdr Drain

____ 1-BC-177, BC Alt M/U Pump Suct

____ 1-BC-180, BC Alt M/U Pump Recirc Line Isol

____ 1-BC-455, BC Alt M/U Pump Discharge Drain

_____ 5.9.16 Disconnect hose at pump discharge. Reconnect discharge fittings AND plug in sump pump.

_____ 5.9.17 Verify pump is operating properly. IF NOT, THEN re-perform Steps 5.9.4 through 5.9.16 as necessary.

_____ 5.9.18 Disconnect hose AND return hose and bucket to Ops shack.

Performed by: _____ _____ _____ _____
Signature Initial Print Date

_____ _____ _____ _____
Signature Initial Print Date

U.S. Nuclear Regulatory Commission
Surry Power Station

SR10301
Simulator Job Performance Measure APE003.AA1.02 (3.6/3.4)

Applicant_____ Start Time_____

Examiner_____

Date _____ Stop Time_____

Title

RECOVER A DROPPED ROD.

K/A: APE003.AA1.02 Ability to operate and/or monitor the following as they apply to the Dropped Control Rod: Controls and components necessary to recover rod.

Applicability	**Estimated Time**	**Actual Time**
RO/SRO(I)	22 Minutes	

Conditions

- Task is to be PERFORMED in the simulator.
- A single dropped RCCA (P-10) has occurred. Reactor power has been reduced to approximately 65-70% power and stabilized. AP-1.00 has been performed through step 23 and transition made to AP-1.01, step 5 where it has been performed through step 14.

Standards

- Rod P-10 fully withdrawn IAW 0-AP-1.01, Control Rod Misalignment.

Initiating Cues

- 0-AP-1.01, Control Rod Misalignment, step 15
- Shift Manager direction.

Terminating Cues

- 0-AP-1.01, Control Rod Misalignment, step 28 completed.

Procedures

- 0-AP-1.01, Control Rod Misalignment

Tools and Equipment

- None

Safety Considerations

- None

Simulator Setup

- Recall IC-322 OR
- Call up 70% power IC and initialize.
- Enter malfunctions for dropped RCCA P-10 (RD1224), annuciator overrides (0ff) GC4 (UPPER ION CHAMBER DEVIATION OR AUTO DEFEAT < 50%), GD4 (LOWER ION CHAMBER DEVIATION OR AUTO DEFEAT < 50%) and GE4 (NIS PWER RGE CH1 AVG FLUX DEVIATION). Perform 0-AP-1.00 through step 23 and transition to 0-AP-1.01 step 5, perform through step 13 and stabilize plant.
- Sign off copy of 0-AP-1.01, Control Rod Misalignment, from step 5 through step 14.
- Verify Tave/Tref recorder set on proper scale for current Tave/Tref.
- **REMOVE MALFUNCTION** (RD1224) & freeze simulator until ready to perform JPM.
- **Place an Orange Magnet next to the Control Bank 'A' Rod Position Indicator for P-10.**

Initiating Cues

- 0-AP-1.01, Control Rod Misalignment, step 15
- Shift Manager direction.

Directions to the Applicant

- I am the Shift Manager. Control Rod P-10 dropped about 1 hour ago due to a blown fuse. The unit has been stabilized and the Instrument Techs have repaired the fuse. Tech Spec 3.12.E has been reviewed by the Shift Manager and STA. A pre-job brief has been held and we are now ready to withdraw the rod. I&C is standing by for your instructions.
- Here's a copy of AP-1.01, I want you to recover the dropped control rod IAW steps 15 through and including step 28.
- When you finish the actions necessary to accomplish this and return the rods to MANUAL, please inform me.

Notes

PERFORMANCE CHECKLIST

Notes to the Evaluator

- Task critical elements are bolded and noted at the end of the step as CRITICAL STEP.
- *An additional instructor may be needed to silence and acknowledge alarms for the examinee.*
- **START TIME:**

STEP 1: ***CAUTIONS PRIOR TO STEP 15*** CAUTION: This procedure is NOT valid for realignment of a control rod if Reactor is subcritical. Realignment SHALL be performed with Reactor power held less than or equal to 75%. **STANDARD:** • Acknowledges cautions. **EVALUATOR'S NOTE: N/A** **COMMENTS:**	_____ **SAT** _____ **UNSAT**
STEP 2: ***STEP 15*** - TRANSFER ROD CONT MODE SEL SWITCH TO AFFECTED BANK **STANDARD:** • **Places ROD CONT MODE SEL SWITCH to CBA (Control Bank 'A') position. This is a Critical Task.** **EVALUATOR'S NOTE: N/A** **COMMENTS:**	_____ **SAT** _____ **UNSAT**

STEP 3: ***Step 16 –*** RECORD AFFECTED ROD AND ROD BANK: • Rod: _____ • Rod Bank: _____ **STANDARD:** • Records rod P-10 and CBA. **EVALUATOR'S NOTE: N/A** **COMMENTS:**	_____ **SAT** _____ **UNSAT**
STEP 4: ***Step 17 -*** ALIGN LIFT COIL DISCONNECT SWITCHES FOR AFFECTED BANK • Place all disconnect switches to DISCONNECTED position • Place affected rod disconnect switch to CONNECTED position • Have alignment switches independently verified. **STANDARD:** • Proceeds behind Vertical Board 1-2 to Lift Coil Disconnect Switch Panel and opens panel door. **NOTES SIGN REQUIRING REMOVAL OF JEWELRY PRIOR TO ENTRY.** • **Places all 8 disconnect switches for Control Bank 'A' in the DISCONNECT position. This is a Critical Task.** • **Places disconnect switch for rod P-10 in the CONNECT position. This is a Critical Task.** • Asks for an independent verification of disconnect switches position. **EVALUATOR'S NOTE:** If asked, Lift Coil Disconnect Switches have been independently verified. **COMMENTS:**	_____ **SAT** _____ **UNSAT**

STEP 5: ***Step 18 -*** RECORD BANK POSITION OF AFFECTED ROD: • Group 1 step counter: _____ • Group 2 step counter: _____ **STANDARD:** • Records group 1 & 2 step counters for CBA at 228 steps. **EVALUATOR'S NOTE: N/A** **COMMENTS:**	_____ **SAT** _____ **UNSAT**
STEP 6: ***Cautions prior to Step 19*** CAUTION: The affected withdrawal rate during realignment is limited to 2/P (P=fraction of Core Power where 100% power is equal to 1.0) steps per hour (if not a whole number, round down to the whole number) if affected rod remains misaligned for more than 12 hours or the duration of misalignment can NOT be determined. The withdrawal rate limitation may be relaxed with the authorization from the Reactor Engineer or Nuclear Analysis and Fuels. **STANDARD:** • Acknowledges cautions. **EVALUATOR'S NOTE**: If asked, Reactor Engineering has authorized that the 2/P rod speed limit be relaxed. No limit on rod speed is required. **COMMENTS:**	_____ **SAT** _____ **UNSAT**
STEP 7: ***Step 19 –*** RECORD THE FOLLOWING • Reactor Power: _____ • Withdrawal Rate: _____	_____ **SAT** _____ **UNSAT**

STANDARD: • Records current reactor power level (will be approximately 65-70%). • Records withdrawal rate at 48 spm. **EVALUATOR'S NOTE:** If asked, Reactor Engineering has authorized that the 2/P rod speed limit be relaxed. No limit on rod speed is required. If asked, Do not exceed 70% power, a 1 dpm SUR or temperature >565°F during dropped rod recovery. **COMMENTS:**	
STEP 8: ***Note prior to step 20*** **NOTE:** Refer to Attachment 2 before resetting Group Step Counter. **STANDARD:** • Acknowledges note. • Refers to attachment 2 (trainee may wait and refer to attachment 2 before resetting group step counters). **EVALUATOR'S NOTE: N/A** **COMMENTS:**	_____ **SAT** _____ **UNSAT**
STEP 9: ***Step 20 –*** CHECK AFFECTED ROD – ON BOTTOM **STANDARD:** • Checks rod P-10 indicating zero steps using digital and light indication. **EVALUATOR'S NOTE: N/A** **COMMENTS:**	_____ **SAT** _____ **UNSAT**

STEP 10: ***Step 21 –*** REFER TO TECH SPEC 3.12.E **STANDARD:** • Trainee recalls from directions that Tech Spec 3.12.E has been reviewed. **EVALUATOR'S NOTE:** If asked, Tech Spec 3.12.E has been reviewed. **COMMENTS:**	_____ **SAT** _____ **UNSAT**
STEP 11: ***Step 22 –*** RESET AFFECTED GROUP STEP COUNTER TO 0. **STANDARD:** • Trainee refers to attachment 2 to reset group step counter to zero steps. • **Trainee resets group step counter CONT BANK A GP 2 by pressing reset button OR by pulsing the group step counter until it reads 0 steps. This is a Critical Task.** **EVALUATOR'S NOTE:** If asked, it is preferred to use the reset button. **COMMENTS:**	_____ **SAT** _____ **UNSAT**
STEP 12: ***Step 23 –*** HAVE I&C RESET AFFECTED BANK DEMAND TO 000. **STANDARD:** • Trainee calls I&C and requests they reset affected bank CONT BANK A demand to 000. **EVALUATOR'S NOTE: N/A** **BOOTH OPERATOR'S NOTE:** When requested to reset bank demand, inform the trainee that a time compression has occurred and CONT BANK A has been reset to 000 by I&C.	_____ **SAT** _____ **UNSAT**

COMMENTS:	
STEP 13: ***Note prior to step 24*** **NOTE:** Annunciator 1G-A6, ROD CONT SYS URGENT FAILURE, will alarm when the affected rod is withdrawn indicating that the lift coils of the remaining rods in the bank are deenergized. **STANDARD:** • Acknowledges note. **EVALUATOR'S NOTE: N/A** **COMMENTS:**	_____ **SAT** _____ **UNSAT**
STEP 14: ***Step 24 –*** REALIGN AFFECTED ROD TO ITS BANK POSITION RECORDED IN STEP 18. **STANDARD:** • **Places SHUTDN AND CONT ROD CONT SWITCH to the OUT position. This is a Critical Task.** • Verifies outward rod motion indicated by observing affected rod CERPI. • Acknowledges annunciator 1G-A6 (ROD CONT SYS URGENT FAILURE). • **Withdraws affected rod to 228 steps. This is a Critical Task.** • Continuously monitors SUR, PR NI's, IR NI's, ΔT, Tave, group step counters, CERPI, rod speed, out indication light and TR-1-409A. **EVALUATOR'S NOTE: N/A** **COMMENTS:**	_____ **SAT** _____ **UNSAT**

STEP 15: ***Step 25 –*** PLACE AFFECTED BANK LIFT COIL DISCONNECT SWITCHES TO THE CONNECT POSITION. **STANDARD:** • Proceeds behind Vert Bd 1-2 to Lift Coil Disconnect Switch Panel. **NOTES SIGN REQUIRING REMOVAL OF JEWELRY PRIOR TO ENTRY.** • **Closes disconnect switches for affected bank (F-2, B-10, K-14, P-6, K-2, B-6 & F-14). This is a Critical Task.** **EVALUATOR'S NOTE: N/A** **COMMENTS:**	_____ **SAT** _____ **UNSAT**
STEP 16: ***Step 26 –*** HAVE ALIGNMENT OF DISCONNECT SWITCHES INDEPENDENTLY VERIFIED **STANDARD:** • Trainee recalls from directions that Tech Spec 3.12.E has been reviewed. **EVALUATOR'S NOTE:** If asked, Lift Coil Disconnect Switches have been independently verified. **COMMENTS:**	_____ **SAT** _____ **UNSAT**
STEP 17: ***Step 27 –*** RESET ROD CONTROL URGENT FAILURE • Depress ROD CONT SYS INTERNAL ALARM RESET pushbutton **STANDARD:** • **Depresses ROD CONT SYS INTERNAL ALARM RESET pushbutton. This is a Critical Task.**	_____ **SAT** _____ **UNSAT**

EVALUATOR'S NOTE: N/A **COMMENTS:**	
STEP 18: ***Step 28 –*** TRANSFER ROD CONT MODE SEL SWITCH TO MANUAL **STANDARD:** • Moves rod control mode selector switch from CBA to Manual. **EVALUATOR'S NOTE: N/A** **COMMENTS:**	_____ **SAT** _____ **UNSAT**
STEP 11: REPORT TO SHIFT SUPERVISOR (EVALUATOR). **STANDARD:** Verbal status report that control rod P-10 has been realigned with its control bank and steps 15-28 of AP-1.01 have been completed. **EVALUATOR'S NOTE: N/A** **COMMENTS:**	_____ **SAT** _____ **UNSAT**

STOP TIME:

_____

_____

_____

_____

_____

_____

Operator Directions Handout
(TO BE READ TO APPLICANT BY EXAMINER)

Task

- Task is to be performed in the simulator.
- Perform Steps 15 – 28 of 0-AP-1.01, CONTROL ROD MISALIGNMENT, to align control rod P-10 with its control bank.

Directions

The evaluator will explain the initial conditions of the task to be performed and will provide the initiating cue. Ensure you indicate to the evaluator when you understand your assigned task

Initial Conditions

- A single dropped RCCA (P-10) has occurred. Reactor power has been reduced to approximately 65-70% power and stabilized. AP-1.00 has been performed through step 23 and transition made to AP-1.01, step 5 where it has been performed through step 14.

Initiating Cues

- I am the Shift Manager. Control Rod P-10 dropped about 1 hour ago due to a blown fuse. The unit has been stabilized and the Instrument Techs have repaired the fuse. Tech Spec 3.12.E has been reviewed by the Shift Manager and STA. A pre-job brief has been held and we are now ready to withdraw the rod. I&C is standing by for your instructions.
- Here's a copy of AP-1.01, I want you to recover the dropped control rod IAW steps 15 through and including step 28.
- When you finish the actions necessary to accomplish this and return the rods to MANUAL, please inform me.

Operator Directions Handout
(TO BE GIVEN TO APPLICANT)

Initial Conditions

- A single dropped RCCA (P-10) has occurred. Reactor power has been reduced to approximately 65-70% power and stabilized. AP-1.00 has been performed through step 23 and transition made to AP-1.01, step 5 where it has been performed through step 14.

Initiating Cues

- I am the Shift Manager. Control Rod P-10 dropped about 1 hour ago due to a blown fuse. The unit has been stabilized and the Instrument Techs have repaired the fuse. Tech Spec 3.12.E has been reviewed by the Shift Manager and STA. A pre-job brief has been held and we are now ready to withdraw the rod. I&C is standing by for your instructions.
- Here's a copy of AP-1.01, I want you to recover the dropped control rod IAW steps 15 through and including step 28.
- When you finish the actions necessary to accomplish this and return the rods to MANUAL, please inform me.

STEP	ACTION/EXPECTED RESPONSE	RESPONSE NOT OBTAINED

* *

CAUTION: An infrequently conducted or complex test requires a Senior Operations Manager presence.

* *

14. SI DIRECT SENIOR OPERATIONS MANAGER TO CONDUCT PRE-JOB BRIEF IAW ATTACHMENT 1

* *

CAUTION:
- This procedure is NOT valid for realignment of a control rod if Reactor is subcritical.
- Realignment SHALL be performed with Reactor power held less than or equal to 75%.

* *

15. ___ TRANSFER ROD CONT MODE SEL SWITCH TO AFFECTED BANK

16. ___ RECORD AFFECTED ROD AND ROD BANK:

- ☐ • Rod:_____
- ☐ • Rod Bank:_____

17. ___ ALIGN LIFT COIL DISCONNECT SWITCHES FOR AFFECTED BANK:

- ☐ a) Place all disconnect switches to DISCONNECTED position
- ☐ b) Place affected rod disconnect switch to CONNECTED position
- ☐ c) Have alignment of disconnect switches independently verified

STEP	ACTION/EXPECTED RESPONSE	RESPONSE NOT OBTAINED

18. ___ RECORD BANK POSITION OF AFFECTED ROD:

- ☐ • Group 1 Step Counter:_____
- ☐ • Group 2 Step Counter:_____

* *

CAUTION: • The affected withdrawal rate during realignment is limited to 2/P (P=fraction of Core Power where 100% power is equal to 1.0) steps per hour (if not a whole number, round down to the whole number) if affected rod remains misaligned for more than 12 hours or the duration of misalignment can NOT be determined.

• The withdrawal rate limitation may be relaxed with authorization from the Reactor Engineer or Nuclear Analysis and Fuels.

* *

19. ___ RECORD THE FOLLOWING:

- ☐ • Reactor power:_____
- ☐ • Withdrawal rate:_____

STEP	ACTION/EXPECTED RESPONSE	RESPONSE NOT OBTAINED

NOTE: Refer to Attachment 2 before resetting Group Step Counter.

20. ___ CHECK AFFECTED ROD - ON BOTTOM

Do the following:

- ☐ a) Refer to Tech Spec 3.12.E.
- ☐ b) Reset affected Group Step Counter to IRPI of misaligned rod.
- ☐ c) Have I&C reset affected Bank Demand to IRPI of misaligned rod.
- ☐ d) Withdraw the rod until affected Group Step Counter is at 242.
- ☐ e) Reset affected Group Step Counter to 230.
- ☐ f) GO TO Step 24.

21. ___ REFER TO TECH SPEC 3.12.E

22. ___ RESET AFFECTED GROUP STEP COUNTER TO 0

23. ___ HAVE I&C RESET AFFECTED BANK DEMAND TO 000

NOTE: Annunciator ( )G-A6, ROD CONT SYS URGENT FAILURE, will alarm when the affected rod is withdrawn indicating that the lift coils of the remaining rods in the bank are deenergized.

24. ___ REALIGN AFFECTED ROD TO ITS BANK POSITION RECORDED IN STEP 18

☐ Have Engineering determine hot channel factors within limits IAW 0-NPT-RX-010 within 72 hours.

25. ___ PLACE AFFECTED BANK LIFT COIL DISCONNECT SWITCHES TO THE CONNECTED POSITION

STEP	ACTION/EXPECTED RESPONSE	RESPONSE NOT OBTAINED
26. ___	HAVE ALIGNMENT OF DISCONNECT SWITCHES INDEPENDENTLY VERIFIED	
27. ___	RESET ROD CONTROL URGENT FAILURE	
	☐ • Depress ROD CONT SYS INTERNAL ALARM RESET pushbutton	
28. ___	TRANSFER ROD CONT MODE SEL SWITCH TO MANUAL	
29. ___	VERIFY REACTOR AND TURBINE POWER - MATCHED AND STABLE	☐ Adjust Rod Control or Turbine Controls to match and stabilize power.
30. ___	VERIFY DELTA FLUX - IN BAND	☐ Borate or dilute as necessary to restore delta flux to band.
31. ___	DIRECT INSTRUMENT DEPARTMENT TO CHECK THE FOLLOWING FOR PROPER SETTINGS:	
	☐ • Master Cycler	
	☐ • Bank Demand	
	☐ • Bank Overlap Counter	
32. ___	POSITION ROD CONT MODE SEL SWITCH IAW SHIFT SUPERVISION AND REACTOR ENGINEERING DIRECTION	
33. ___	CHECK INSTRUMENTATION SETPOINTS CHANGED DUE TO TECH SPEC REQUIREMENTS - RETURNED TO NORMAL	☐ Direct Instrumentation Department to reset setpoints.
34. ___	NOTIFY SHIFT SUPERVISION	

- END -

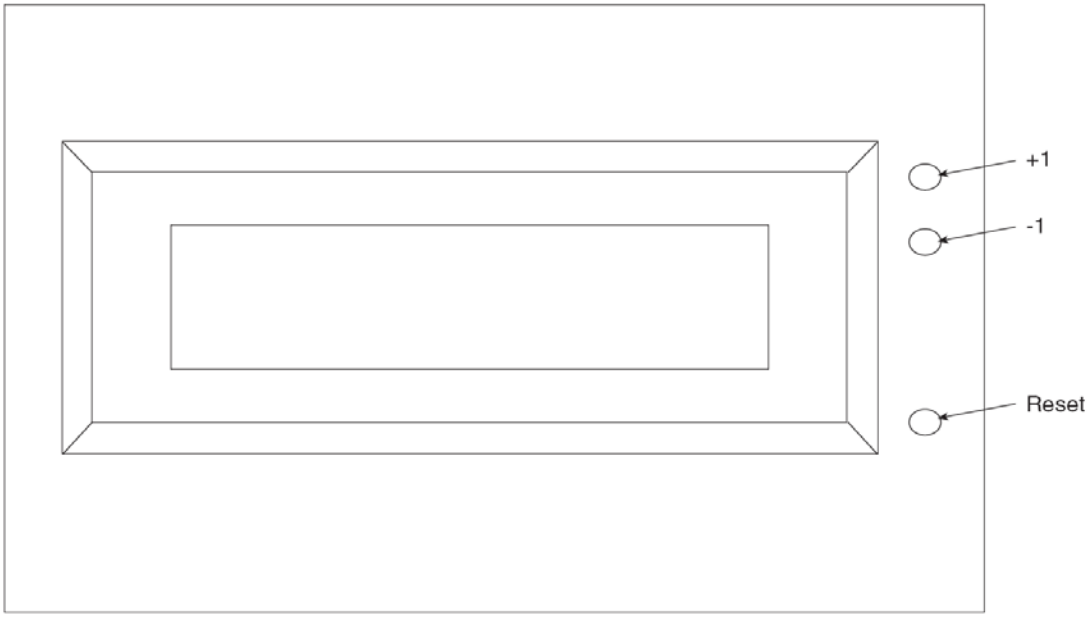

Graphics No: PC456

GROUP STEP DEMAND COUNTER

U.S. Nuclear Regulatory Commission
Surry Power Station

SR10301
Simulator Job Performance Measure 011.A2.11 (3.4/3.6)

Applicant_____ Start Time_____

Examiner_____

Date _____ Stop Time_____

Title

RESPOND TO A FAILED LOW PRESSURIZER LEVEL CHANNEL

K/A: 011.A2.11 Ability to (a) predict the impacts of the following malfunctions or operations on the PZR LCS; and (b) based on those predictions, use procedures to correct, control, or mitigate the consequences of those malfunctions or operations: Failure of PZR level instrument - low.

Applicability	Estimated Time	Actual Time
RO/SRO(I)	15 minutes	

Conditions

- Task is to be PERFORMED in the simulator.
- Unit is operating at 100% power with all systems normal and in automatic.

Standards

- 0-AP-53.00 complete up and not including step 14 (Failed channel defeated, pressurizer heaters energized as required, charging in Auto).

Initiating Cues

- AP-53.00 Immediate Actions
- Shift Manager direction.

Terminating Cues

- 0-AP-53.00, Loss of Vital Instrumentation/Controls completed up to step 14.

Procedures

- 0-AP-53.00, Loss of Vital Instrumentation/Controls

Tools and Equipment

- None

Safety Considerations

- None

Simulator Setup

- Recall IC-321 OR
- Call up 100% power IC and initialize place in RUN, select position III/II on the Pressurizer level control selector switch.
- Place pressurizer level recorder on Channel 3, 1-RC-LI-1461.
- Program malfunction for low failure of Pressurizer Level Channel III (RC-LT-1461, RC4903), trigger 1.
- Implement malfunctions to fail letdown auto isolation (CH62, CH63 to true)
- After evaluation begins, activate trigger 1.

Initiating Cues

- AP-53.00 Immediate Actions
- Shift Manager direction.

Directions to the Applicant

- You are the Unit 1 RO and I am the Shift Manager. The unit is operating at 100% power with all systems in automatic.
- You are to respond to a plant transient.
- When you finish the actions necessary to stabilize the unit at pre-event conditions, please inform me.

Notes

PERFORMANCE CHECKLIST

Notes to the Evaluator

- Task critical elements are bolded and noted at the end of the step as CRITICAL STEP.
- *An additional instructor may be needed to silence and acknowledge alarms for the examinee.*
- **START TIME:**

STEP 1: IDENTIFIES CHANNEL III PRESSURIZER LEVEL FAILED LOW. **STANDARD:** • Identifies 1-RC-LI-1461 failed low. • Acknowledges Annunciator E-H-6, PRZR LO LVL CH-3. • Enters 0-AP-53.00, Loss of Vital Instrumentation/Controls. **EVALUATOR'S NOTE: N/A** **COMMENTS:**	_____ **SAT** _____ **UNSAT**
STEP 2: ***STEP 1*** - VERIFY REDUNDANT INSTRUMENT CHANNEL(S) INDICATION - NORMAL **STANDARD:** • Verifies RC-LT-1459 and 1460 normal. • Acknowledges annunciator C-E-8, PRZR LO LVL HTRS OFF & LETDOWN ISOL. **EVALUATOR'S NOTE: N/A** **COMMENTS:**	_____ **SAT** _____ **UNSAT**

STEP 3: ***Step 2 –*** PLACE AFFECTED CONTROL(S)/COMPONENT(S) IN MANUAL CONTROL AND STABILIZE PARAMETER USING REDUNDANT INDICATION **STANDARD:** • **Places charging flow control in manual and reduces to pre-event flow (80-90 gpm). This is a Critical Task.** **EVALUATOR'S NOTE: N/A** **COMMENTS:**	_____ **SAT** _____ **UNSAT**
STEP 4: IMMEDIATE ACTIONS OF 0-AP-53.00 COMPLETE. **STANDARD:** • Operator reports the immediate actions of AP-53.00 are complete. **EVALUATOR'S NOTE:** Once the operator has reported the immediate actions of 0-AP-53.00 are complete, acknowledge the completion of the immediate action steps and inform the operator that you would like them to continue on and perform 0-AP-53.00 up to and not including step 14 and hand them a copy of the procedure. **COMMENTS:**	_____ **SAT** _____ **UNSAT**
STEP 5: ***Step 3 -*** VERIFY REACTOR POWER – LESS THAN OR EQUAL TO 100% (continuous action step). **STANDARD:** • Verifies Reactor Power indicating less than or equal to 100% using PCS 10 minute and/or instantaneous power indications. **EVALUATOR'S NOTE: N/A** **COMMENTS:**	_____ **SAT** _____ **UNSAT**

STEP 6: ***NOTES PRIOR TO STEP 4*** **NOTE:** • Step 4 failures are listed in order of performance priority. Only the failed instrument/control and associated step number should be read aloud. • When the affected instrument/controller malfunction(s) has been addressed by this procedure, recovery actions should continue at step 14. **STANDARD:** • Acknowledges notes **EVALUATOR'S NOTE: N/A** **COMMENTS:**	_____ **SAT** _____ **UNSAT**
STEP 7: ***Step 4 -*** DETERMINE THE FAILED INSTRUMENT/CONTROL AND GO TO APPROPRIATE STEP. **STANDARD:** • Determines PRZR Level Control to be the failed instrument and goes to step 12. **EVALUATOR'S NOTE: N/A** **COMMENTS:**	_____ **SAT** _____ **UNSAT**
STEP 8: ***Step 12a –*** CHECK PRZR LEVEL CONTROL CHANNELS - NORMAL **STANDARD:** • Determines that all pressurizer level channels are not normal and goes to 12aRNO. **EVALUATOR'S CUE: N/A** **COMMENTS:**	_____ **SAT** _____ **UNSAT**

STEP 9: ***Step 12aRNO –*** a) Do the following, as necessary: 1) Place either of the following in MANUAL: • 1-CH-FC-1122C, CHG FLOW CNTRL OR • 1-CH-LC-1459G, PRZR LEVEL CNTRL 2) Control PRZR level at program level. 3) Move PRZR LVL - CH SEL switch to defeat the failed channel. 4) Verify or place recorder 1-RC-LR-1459 on an operable channel. 5) Refer to Tech Spec 3.1.A.5 (if Pressurizer heaters deenergized), Table 3.7-1, Item 9 and Table 3.7-6, Item 13. 6) Refer to Attachment 3. **STANDARD:** • Places either 1-CH-FCV-1122C or 1-CH-LC-1459G in manual to control pressurizer level at program level. Note: One of these may already have been placed in manual during the immediate action steps. • **Moves PRZR LVL – CH SEL switch to defeat channel III. The channel should be placed in postion 1 which selects channel I as the upper and channel II as the lower. This is a Critical Task.** • Places 1-RC-LR-1459 on an operable channel. • Notifies SM to review Tech Specs. • Refers to attachment 3 in 0-AP-53.00. **EVALUATOR'S NOTE:** If asked, Tech Specs will be reviewed by Unit Supervisor / Shift Manager. **COMMENTS:**	_____ **SAT** _____ **UNSAT**

STEP 10: ***Step 12b–*** Verify Pressurizer Heaters - ENERGIZED **STANDARD:** • Trainee determines that not all pressurizer heaters are energized as required and that "C" Group pressurizer proportional heaters will need to be reset. Goes to RNO. **EVALUATOR'S NOTE: N/A** **COMMENTS:**	_____ **SAT** _____ **UNSAT**
STEP 11: ***Step 12bRNO–*** Reset Pressurizer Heaters. **STANDARD:** • Resets Group "C" pressurizer proportional heaters and verifies all heaters are energized or in Auto as required. **EVALUATOR'S NOTE: N/A** **COMMENTS:**	_____ **SAT** _____ **UNSAT**
STEP 12: ***Step 12c–*** Check letdown - IN SERVICE. **STANDARD:** • Verifies letdown is in service by observing normal letdown flow indicated. Note: The trainee may point out that auto letdown isolation failed when 1-RC-LI-1461 failed low. **EVALUATOR'S NOTE: N/A** **COMMENTS:**	_____ **SAT** _____ **UNSAT**

STEP 13: ***Step 12d–*** Check PRZR level control – IN AUTOMATIC **STANDARD:** • Determines pressurizer level control is in manual by observing 1-CH-FCV-1122C or 1-CH-LC-1459G in manual. Goes to RNO. **EVALUATOR'S NOTE: N/A** **COMMENTS:**	_____ **SAT** _____ **UNSAT**
STEP 14: ***Step 12dRNO–*** Check PRZR level control – IN AUTOMATIC d) Do the following as required: 1) Verify PRZR level restored to program. 2) Unsaturate 1-CH-LC-1459G, PRZR LEVEL CNTRL, as required. 3) Return 1-CH-FCV-1122 to AUTOMATIC by verifying or placing the following in AUTOMATIC: • 1-CH-FC-1122C, CHG FLOW CNTRL • 1-CH-LC-1459G, PRZR LEVEL CNTRL **STANDARD:** • Checks pressurizer level at program level. • Unsaturates 1-CH-LC-1459G if necessary. • Returns 1-CH-FCV-1122C and/or 1-CH-LC-1459G to Auto. **EVALUATOR'S NOTE: N/A** **COMMENTS:**	_____ **SAT** _____ **UNSAT**

STEP 15: IAW the Note prior to step 4, recovery actions should continue at step 14. **STANDARD:** • Transitions to step 14. **EVALUATOR'S NOTE: N/A** **COMMENTS:**	_____ **SAT** _____ **UNSAT**
STEP 16: REPORT TO SHIFT SUPERVISOR (EVALUATOR). **STANDARD:** Verbal status report that 0-AP-53.00 is complete up to but not including step 14. **EVALUATOR'S NOTE: N/A** **STOP TIME:** **COMMENTS:**	_____ **SAT** _____ **UNSAT**

STOP TIME:

_____

_____

_____

_____

_____

_____

Operator Directions Handout
(TO BE READ TO APPLICANT BY EXAMINER)

Task

- Task is to be performed in the simulator.

- Perform Steps immediate action steps of AP-53.00, Loss of Vital Instrumentation/Controls, and then perform AP-53.00 up to but not including step 14.

Directions

The evaluator will explain the initial conditions of the task to be performed and will provide the initiating cue. Ensure you indicate to the evaluator when you understand your assigned task

Initial Conditions

- Unit is at 100% power and stable.

Initiating Cues

- You are the Unit 1 RO and I am the Shift Manager. The unit is operating at 100% power with all systems in automatic.
- You are to respond to a plant transient.
- When you finish the actions necessary to stabilize the unit at pre-event conditions, please inform me.

Operator Directions Handout
(TO BE GIVEN TO APPLICANT)

Initial Conditions

- Unit is at 100% power and stable.

Initiating Cues

- You are the Unit 1 RO and I am the Shift Manager. The unit is operating at 100% power with all systems in automatic.
- You are to respond to a plant transient.
- When you finish the actions necessary to stabilize the unit at pre-event conditions, please inform me.

PURPOSE

To provide guidance for malfunctions of vital instrumentation or controls.

TIME CRITICAL ACTIONS

ENTRY CONDITIONS

1. A faulty indication occurs on a vital instrumentation channel.
2. Failure of a Main Control Room controller
3. Unit Supervisor direction.

CONTINUOUS USE

STEP	ACTION/EXPECTED RESPONSE	RESPONSE NOT OBTAINED
[1] ___	VERIFY REDUNDANT INSTRUMENT CHANNEL(S) INDICATION - NORMAL	☐ IF unable to determine if the Reactor is in a safe condition, THEN GO TO ( )-E-0, REACTOR TRIP OR SAFETY INJECTION.
[2] ___	PLACE AFFECTED CONTROL(S)/ COMPONENT(S) IN MANUAL CONTROL AND STABILIZE PARAMETER USING REDUNDANT INDICATION	Do the following: ☐ a) IF no control function affected, THEN GO TO Step 4. ☐ b) IF Feedwater-related failure, THEN control SG level with Feedwater Isolation MOVs. ☐ c) IF PRZR PORV-related failure, THEN close the PRZR PORV Block Valve. ☐ d) IF manual control is ineffective or unavailable, THEN evaluate transition to ( )-E-0, REACTOR TRIP OR SAFETY INJECTION.
*3. ___	VERIFY REACTOR POWER - LESS THAN OR EQUAL TO 100%	☐ Initiate Attachment 7.

STEP	ACTION/EXPECTED RESPONSE	RESPONSE NOT OBTAINED

NOTE:
- Step 4 failures are listed in order of performance priority. Only the failed instrument/control and associated step number should be read aloud.
- When the affected instrument/controller malfunction(s) has been addressed by this procedure, recovery actions should continue at Step 14.

*4. ___ DETERMINE THE FAILED INSTRUMENT / CONTROL AND GO TO APPROPRIATE STEP:

- ☐ • PRZR Pressure Control, Step 5
- ☐ • NI Malfunction, Step 5
- ☐ • SG Feed Flow, Step 8
- ☐ • SG NR Level, Step 8
- ☐ • SG Pressure, Step 8
- ☐ • SG Steam Flow, Step 8
- ☐ • Turbine First Stage Pressure, Step 9
- ☐ • Median Tave, Step 10
- ☐ • Loop Tave, Step 10
- ☐ • Loop ΔT, Step 10
- ☐ • Steam Dumps / SG PORVs, Step 11
- ☐ • Turbine Controls, Step 11
- ☐ • Turbine Valve Position, Step 11
- ☐ • Turbine Monitoring Lights, Step 11
- ☐ • PRZR Level Control, Step 12
- ☐ • Reactor Coolant Flow, Step 13a
- ☐ • PRZR Pressure Protection, Step 13b
- ☐ • RCS Wide Range Pressure, Step 13f
- ☐ • VCT Level, Step 13e
- ☐ • CTMT Pressure, Step 13c
- ☐ • RWST Level, Step 13d
- ☐ • Underground FO Storage Tk, Step 13g
- ☐ • CAT Level, Step 13h
- ☐ • Emergency Condensate Makeup Tank Level, Step 13i
- ☐ • FP/Domestic Water Level, Step 13j

STEP	ACTION/EXPECTED RESPONSE	RESPONSE NOT OBTAINED
5. ___	CHECK THE FOLLOWING INSTRUMENTS/ CONTROLS - AFFECTED ☐ • Nuclear Instrumentation ☐ • Pressurizer Pressure control	☐ GO TO Step 8.
	NOTE: RCS pressure decrease will cause a slight decrease in RCS Tave due to negative reactivity from the moderator pressure coefficient.	
6. ___	CHECK PRZR SPRAY VALVE CONTROLLERS - NORMAL	Do the following: ☐ a) Place failed controller in Manual. ☐ b) Restore RCS pressure to normal and stabilize. ☐ c) Verify or stabilize Turbine load. ☐ d) IF manual control is ineffective or unavailable, THEN GO TO ( )-AP-31.00, Increasing or Decreasing RCS Pressure. e) IF RCS pressure returns to normal, THEN do the following: ☐ 1) Maintain stable Turbine load until pressure control system is returned to normal. ☐ 2) IF no other instrumentation failure exists, THEN GO TO Step 14. Otherwise, GO TO Step 8.

STEP	ACTION/EXPECTED RESPONSE	RESPONSE NOT OBTAINED

* *

CAUTION: Delta flux must be monitored and maintained within band if rods have moved.

* *

7. ___ GO TO THE APPROPRIATE ABNORMAL PROCEDURE

- ☐ • ( )-AP-4.00, Nuclear Instrumentation Malfunction
- ☐ • ( )-AP-31.00, Increasing or Decreasing RCS Pressure

STEP	ACTION/EXPECTED RESPONSE	RESPONSE NOT OBTAINED

* *

CAUTION: When CALCALC is based on Feedwater, changes in feed flow will affect calorimetric power. Reactor power must be monitored when adjusting feed flow.

* *

8. ___ CHECK STEAM GENERATOR LEVEL CONTROL INSTRUMENTS - NORMAL

- ☐ • Steam Pressure
- ☐ • Steam Flow
- ☐ • Feed Flow
- ☐ • Steam Generator Level

IF the selected steam flow, steam pressure, or feed flow input to the SG Water Level Control system has failed, THEN do the following:

☐ a) Place the associated Feed Reg Valve in MANUAL.

☐ b) Control SG level at program level.

☐ c) Select the redundant channel for affected SG(s)

☐ d) WHEN SG level returned to normal, THEN place the Feed Reg Valve in AUTOMATIC.

IF SG Level Channel III has failed, THEN do the following:

☐ a) Place the associated Feed Reg Valve in MANUAL.

b) IF manual control of Feedwater is inoperable, THEN do the following:

☐ 1) Control SG level with Feedwater Isolation MOVs.

☐ 2) Consult with the Shift Manager concerning the need to place the MFRV on the jack.

☐ c) Control SG level at program level.

☐ d) Main Feed Reg Valve Bypass Valves may be used for fine control of SG level.

(STEP 8 CONTINUED ON NEXT PAGE)

STEP	ACTION/EXPECTED RESPONSE	RESPONSE NOT OBTAINED
8.	CHECK STEAM GENERATOR LEVEL CONTROL INSTRUMENTS - NORMAL (Continued)	
		Perform follow-up actions:
		☐ a) Consult with Shift Manager on need to initiate ( )-OP-RP-001, ALIGNING CONTROL SYSTEM FOR PERFORMANCE OF CHANNEL I, II, III, AND IV PROCESS AND PROTECTION TESTING.
		b) Refer to the following Tech Spec 3.7 items:
		☐ • Table 3.7-1, 12 and 17
		☐ • Table 3.7-2, 1.c, 1.e, and 3.a
		☐ • Table 3.7-3, 2.a, and 3.a
		☐ • Table 3.7-6, 15 and 16
		☐ c) Refer to Attachment 1.
		☐ d) IF no other instrumentation failure exists, THEN GO TO Step 14.
9. ___	CHECK TURBINE FIRST STAGE PRESSURE CHANNELS - NORMAL	☐ GO TO Attachment 2.

STEP	ACTION/EXPECTED RESPONSE	RESPONSE NOT OBTAINED

* *

CAUTION: Delta flux must be monitored and maintained within band if rods have moved.

* *

NOTE: Depending on the instrumentation failure, the T_{AVE} input to the Steam Dumps may be invalid, causing the Steam Dumps to stay open longer or never open at all.

10. ___ CHECK LOOP/MEDIAN $\Delta T/T_{AVE}$ - NORMAL

☐ a) Median T_{AVE} - NORMAL	a) Do the following: ☐ 1) Place ROD CONT MODE SEL switch in MANUAL, as required. ☐ 2) Take manual control of charging, as necessary to maintain PRZR level at program. ☐ 3) Refer to Attachment 4. ☐ 4) IF no other instrumentation failure exists, THEN GO TO Step 14.
☐ b) Loop T_{AVE} / ΔT - NORMAL	b) Do the following: ☐ 1) Verify ΔT Recorder, ( )/TR-( )-412 is selected to an operable channel. 2) Refer to the following Tech Spec 3.7 items: ☐ • Table 3.7-1, 5 and 6 ☐ • Table 3.7-2, 1.e, and 6 ☐ • Table 3.7-3, 2a ☐ 3) Refer to Attachment 4. ☐ 4) IF no other instrumentation failure exists, THEN GO TO Step 14.

STEP	ACTION/EXPECTED RESPONSE	RESPONSE NOT OBTAINED

* *

CAUTION: If Reactor power has been affected by a secondary transient, Turbine adjustment may be needed to control Tave.

* *

11. ___ CHECK STEAM SYSTEM CONTROLS - NORMAL ☐ • Steam Dumps / PORVs ☐ • Turbine Controls ☐ • Turbine Valve Positions ☐ • Turbine Monitoring Lights	☐ Initiate ( )-AP-38.00, MAIN STEAM SYSTEM CONTROL MALFUNCTION.

STEP	ACTION/EXPECTED RESPONSE	RESPONSE NOT OBTAINED
12. ___	CHECK PRZR LEVEL CONTROL CHANNELS - NORMAL	
☐	a) Check PRZR LVL Instrumentation-NORMAL	a) Do the following, as necessary: 1) Place either of the following in MANUAL: ☐ • ( )-CH-FC-( )122C, CHG FLOW CNTRL OR ☐ • ( )-CH-LC-( )459G, PRZR LEVEL CNTRL ☐ 2) Control PRZR level at program level. ☐ 3) Move PRZR LVL - CH SEL switch to defeat the failed channel. ☐ 4) Verify or place recorder ( )-RC-LR-( )459 on an operable channel. ☐ 5) Refer to Tech Spec 3.1.A.5 (if Pressurizer heaters deenergized), Table 3.7-1, Item 9 and Table 3.7-6, Item 13. ☐ 6) Refer to Attachment 3.
☐	b) Verify Pressurizer Heaters - ENERGIZED	☐ b) Reset Pressurizer Heaters.

(STEP 12 CONTINUED ON NEXT PAGE)

STEP	ACTION/EXPECTED RESPONSE	RESPONSE NOT OBTAINED
12.	CHECK PRZR LEVEL CONTROL CHANNELS - NORMAL (Continued)	
	☐ c) Check letdown - IN SERVICE	☐ c) Restore normal letdown IAW ( )-OP-CH-020, PLACING LETDOWN IN SERVICE FOLLOWING AN AUTOMATIC OR MANUAL ISOLATION. ☐ IF normal letdown can NOT be restored, THEN place Excess Letdown in service IAW ( )-OP-CH-006, SHIFTING OR INCREASING/ DECREASING LETDOWN FLOW.
	☐ d) Check PRZR level control - IN AUTOMATIC	d) Do the following as required: ☐ 1) Verify PRZR level restored to program. ☐ 2) Unsaturate ( )-CH-LC-( )459G, PRZR LEVEL CNTRL, as required. 3) Return ( )-CH-FCV-( )122 to AUTOMATIC by verifying or placing the following in AUTOMATIC: ☐ • ( )-CH-FC-( )122C, CHG FLOW CNTRL ☐ • ( )-CH-LC-( )459G, PRZR LEVEL CNTRL

STEP	ACTION/ EXPECTED RESPONSE	RESPONSE NOT OBTAINED
13. ___	CHECK PROPER OPERATION OF THE FOLLOWING INSTRUMENTS:	
	☐ a) Reactor Coolant Flow instrumentation - NORMAL	☐ a) Refer to Tech Spec 3.7, Table 3.7-1, Item 10.
	☐ b) PRZR Pressure Protection instrumentation - NORMAL	b) Refer to the following Tech Spec 3.7 items: ☐ • Table 3.7-1, 5, 7, and 8 ☐ • Table 3.7-2, 1.d and 6.a (Refer to ( )-OPT-RP-001)
	☐ c) CTMT pressure instrumentation - NORMAL	c) Refer to the following Tech Spec 3.7 items: 1) Protection Channels: ☐ • Table 3.7-2, 1.b and 2.b ☐ • Table 3.7-3, 1.b, 1.c, and 2.b 2) Accident Monitoring (CTMT Wide Range Pressure) ☐ • Table 3.7-6, Item 3 ☐ • Tech Spec 3.7.E
	☐ d) RWST level instrumentation - NORMAL	☐ d) Refer to Tech Spec 3.7, Table 3.7-2, Items 7 and 8.
	☐ e) VCT level instrumentation - NORMAL	☐ e) Refer to Attachment 6.

(STEP 13 CONTINUED ON NEXT PAGE)

STEP	ACTION/EXPECTED RESPONSE	RESPONSE NOT OBTAINED
13.	CHECK PROPER OPERATION OF THE FOLLOWING INSTRUMENTS: (Continued)	
	f) RCS Wide Range Pressure instrumentation - NORMAL	f) Refer to the following:
☐	• PT-402	☐ • Tech Spec 3.7.E, Table 3.7-6
☐	• PT-402-1	☐ • TRM 3.3.2, Table 3.3.2-1
☐	• PT-403	
☐	• PT-458	
☐	g) Underground Fuel Oil Storage Tank level instrumentation - NORMAL	g) Do the following:
		☐ 1) Review Tech Spec Table 4.1-2A, Item 11.
		☐ 2) Initiate Attachment 5.
☐	h) Chemical Addition Tank level instrumentation - NORMAL	h) Do the following:
		☐ 1) Review Tech Spec 3.4.A.4.
		☐ 2) Initiate Attachment 5.
☐	i) Emergency Condensate Makeup Tank level instrumentation - NORMAL	i) Do the following:
		☐ 1) Review TRM Section 3.7.17.
		☐ 2) Initiate Attachment 5.
☐	j) Fire Protection and Domestic Water Tank level instrumentation - NORMAL	☐ j) Initiate Attachment 5.
14. ___	REVIEW ( )-OPT-RX-001, REACTOR POWER CALORIMETRIC USING PCS COMPUTER PROGRAM, TO DETERMINE OPERABILITY OF CALORIMETRIC AND NEED TO PERFORM ( )-OPT-RX-007, SHIFT AVERAGE POWER CALCULATION	
15. ___	CHECK FAILED INSTRUMENT - IS A REGULATORY GUIDE 1.97 VARIABLE	☐ GO TO Step 17.

STEP	ACTION/EXPECTED RESPONSE	RESPONSE NOT OBTAINED
16. ___	REVIEW CEP 99-0029, REG GUIDE 1.97 OPERABILITY, REPORTABILITY, AND ALTERNATE INDICATIONS	
17. ___	REVIEW THE FOLLOWING: ☐ • Tech Spec 3.7 ☐ • VPAP-2802, NOTIFICATIONS AND REPORTS ☐ • TRM SECTION 3.3, INSTRUMENTATION	
18. ___	CHECK ADDITIONAL INSTRUMENT / CONTROLLER MALFUNCTION - EXISTS	☐ GO TO Step 20.
19. ___	RETURN TO STEP 4	
20. ___	PROVIDE NOTIFICATIONS AS NECESSARY: ☐ • Shift Supervision ☐ • OMOC ☐ • STA (PRA determination) ☐ • I&C	

- END -

NOTE: This Attachment uses SG A as a reference for mark numbers.

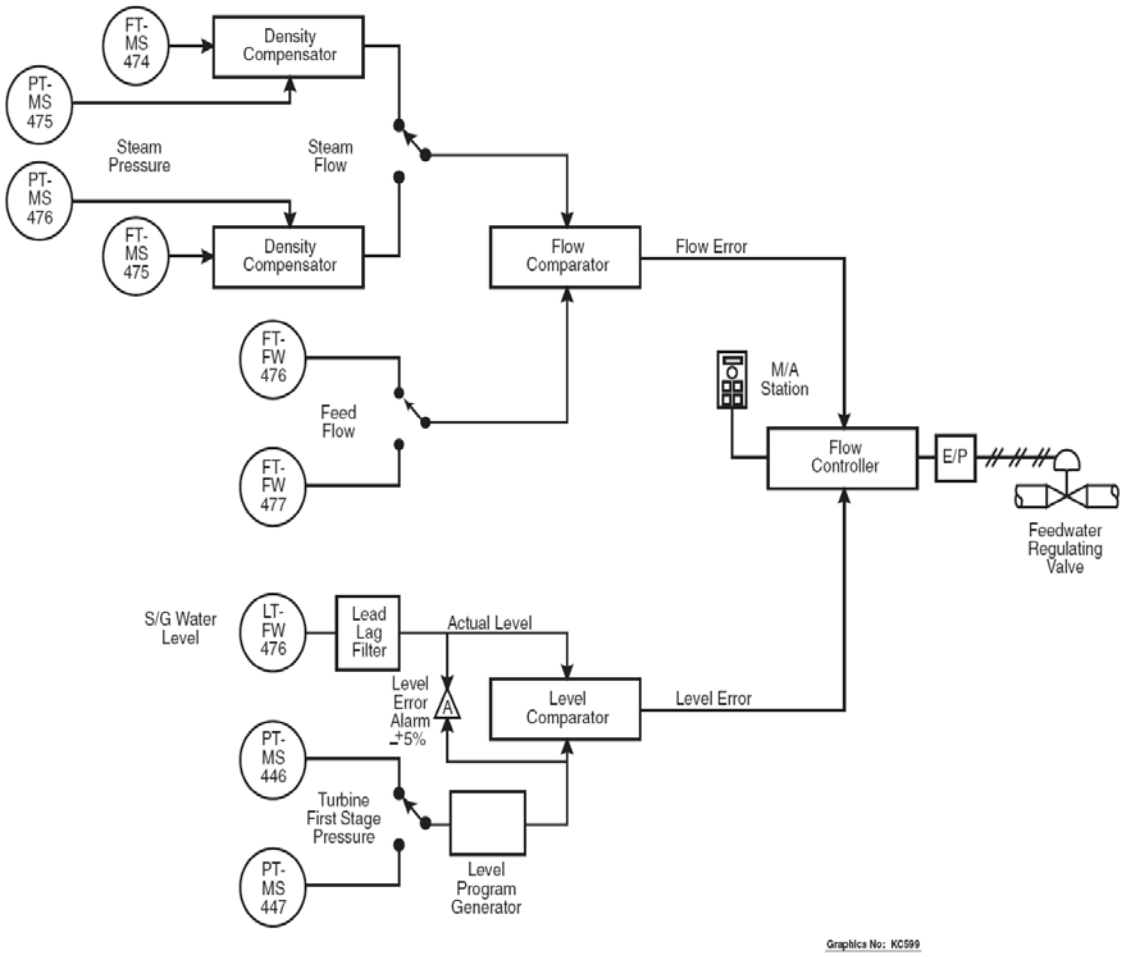

SGWLC DIAGRAM

* *

CAUTION: Delta flux must be monitored and maintained within band if rods have moved.

* *

NOTE: Page 4 of this Attachment shows a one-line diagram of Turbine First Stage Pressure.

1. IF the selected Turbine First Stage Pressure channel has failed, THEN do the following:

___ a. Verify or place the ROD CONT MODE SEL switch in MANUAL.

b. Select redundant Turbine First Stage Pressure channel IAW the following:

___ 1. Verify or place STM DUMP CNTRL switch in OFF-RESET.

___ 2. Verify or place ( )-CP-43-( )CP( )01, SUDDEN LOSS LOAD DEFEAT switch in DEFEAT position.

___ 3. Verify or place Main Feed Reg Valves in MANUAL:

☐ • ( )-FW-FCV-( )478, SG A FEED REG

☐ • ( )-FW-FCV- ( )488, SG B FEED REG

☐ • ( )-FW-FCV-( )498, SG C FEED REG

___ 4. Verify or place TURB FIRST STAGE PRESS CH SEL switch to redundant channel.

* *

CAUTION: When CALCALC is based on Feedwater, changes in feed flow will affect calorimetric power. Reactor power must be monitored when adjusting feed flow.

* *

2. Return affected components to normal position IAW Shift Supervision direction:

a. WHEN SG level returned to normal, THEN place Main Feed Reg Valves in AUTO:

☐ • ( )-FW-FCV-( )478, SG A FEED REG

☐ • ( )-FW-FCV- ( )488, SG B FEED REG

☐ • ( )-FW-FCV-( )498, SG C FEED REG

NOTE:
- Unless there is evidence that a Turbine runback is imminent, the preferred alignment of the Steam Dump control system is ON in the Tave Mode.
- If ( )-MS-PT-( )446 fails low, Steam Dump Demand will go to 100%, but steam dumps will not open, since an arming signal (load reject or trip) is not present. If the steam dumps are not in Steam Pressure Mode following ( )-MS-PT-( )446 failing low and a load reject occurs, then all the steam dumps will open. AMSAC will not function six minutes after the failure.
- If ( )-MS-PT-( )446 fails high, Steam Dump Demand will remain at 0%, and if a load reject signal is present, the dumps will not open (Steam Dump Tref is greater than Tave). However, if a trip signal does occur, the steam dumps will open as they now compare Tave to Tnoload.
- If ( )-MS-PT-( )447 fails low, a load reject signal will develop, but the steam dumps will not open since there is no steam dump demand signal. However, the CP Bldg will be bypassed.The CP Bldg should be returned to service expeditiously to maintain secondary chemistry. AMSAC will not function six minutes after the failure.
- If ( )-MS-PT-( )447 fails high, the load reject arming signal is effectively defeated.

b. Return Steam Dumps to service IAW Shift Supervision direction.

___ 1. Momentarily place STM DUMP MODE SEL switch in RESET.

___ 2. Place STM DUMP CNTRL switch in ON.

___ 3. Place ( )-CP-43-( )CP( )01, SUDDEN LOSS LOAD DEFEAT switch in NORMAL position.

___ 4. IF ( )-MS-PT-( )447 has failed, THEN restore the CP Bldg as required.

☐ a. Have the CP Bldg Operator open ( )-CP-AOV-( )22 in MANUAL.

☐ b. Close ( )-CP-MOV-( )00.

☐ c. Have the CP Bldg Operator slowly close ( )-CP-AOV-( )22 in MANUAL.

☐ d. Place ( )-CP-AOV-( )22 in AUTOMATIC and adjust setpoint to 62 psid.

___ 5. IF ( )-MS-PT-( )446 has failed low, THEN consult with Shift Manager for the need to place the STM DUMP MODE SEL switch in STEAM PRESSURE mode.

c. Return Rod Control to Auto IAW Shift Supervision direction.

___ 1. Review appropriate ARP(s) to verify correct rod position. (for example, G-F-8)

___ 2. Place the ROD CONT MODE SEL switch in AUTO.

3. Perform follow-up actions:

___ a. Consult with Shift Manager on need to initiate ( )-OP-RP-001, ALIGNING CONTROL SYSTEM FOR PERFORMANCE OF CHANNEL I, II, III, AND IV PROCESS AND PROTECTION TESTING.

___ b. Refer to the following Tech Spec 3.7 items.

☐ • Table 3.7-1, 20 (Refer to ( )-OPT-RP-001 - one hour clock) and Table 3.7-2, 1.e

___ c. Refer to VPAP-2802 for AMSAC inoperability.

___ d. IF no other instrumentation failure exists, THEN GO TO Step 14.

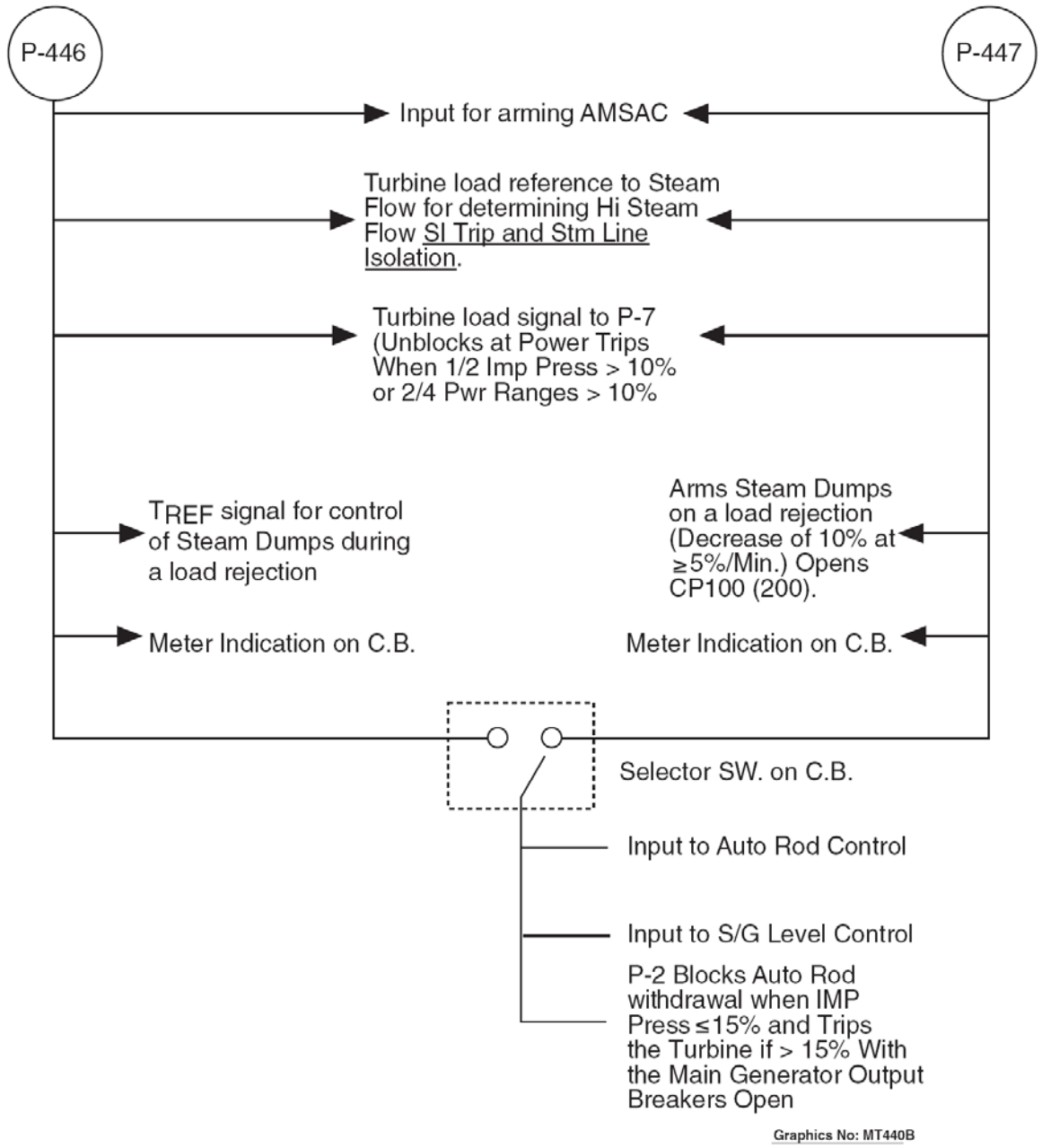

TURBINE IMPULSE PRESSURE SIGNALS

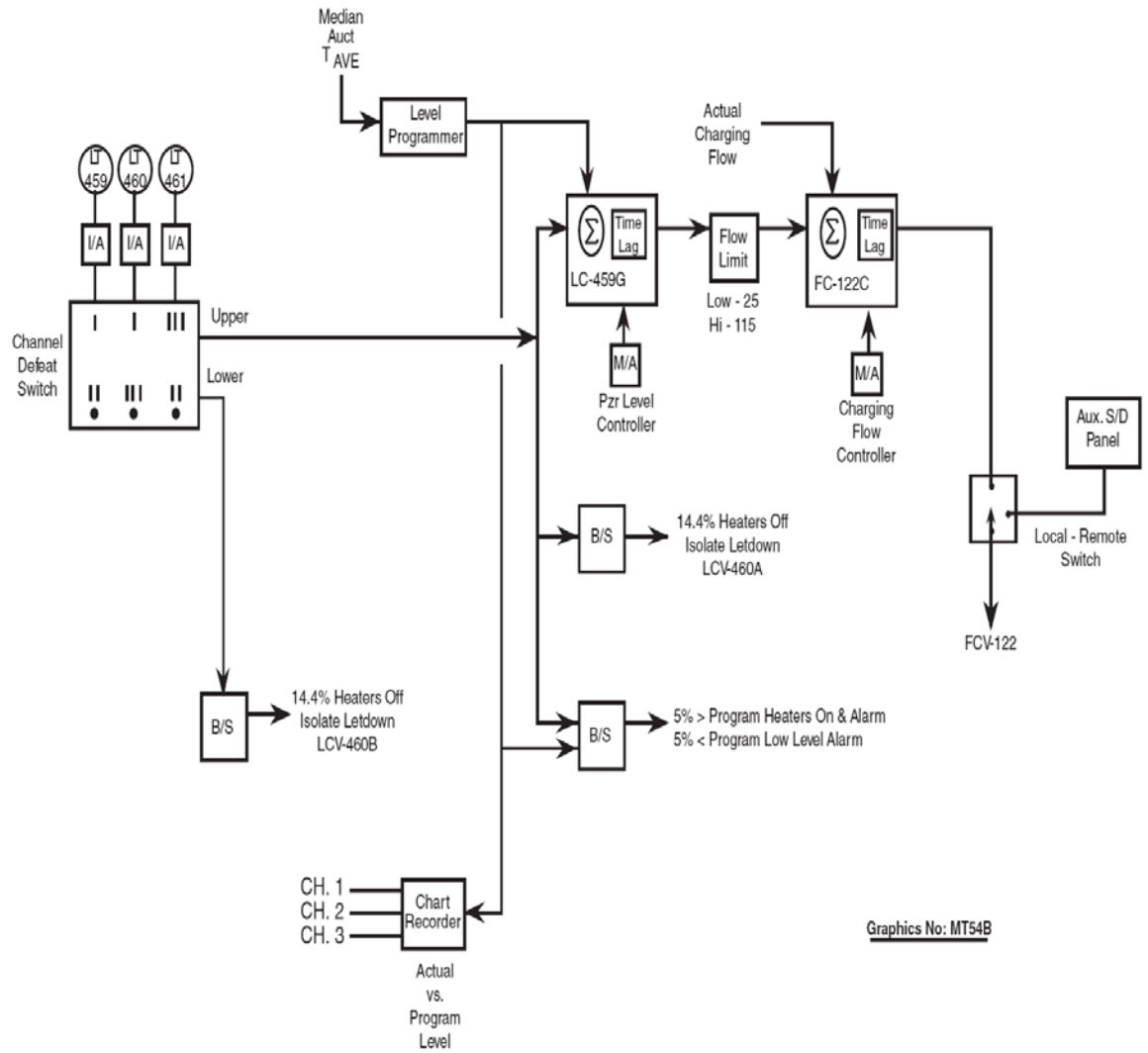

PZR LEVEL CONTROL

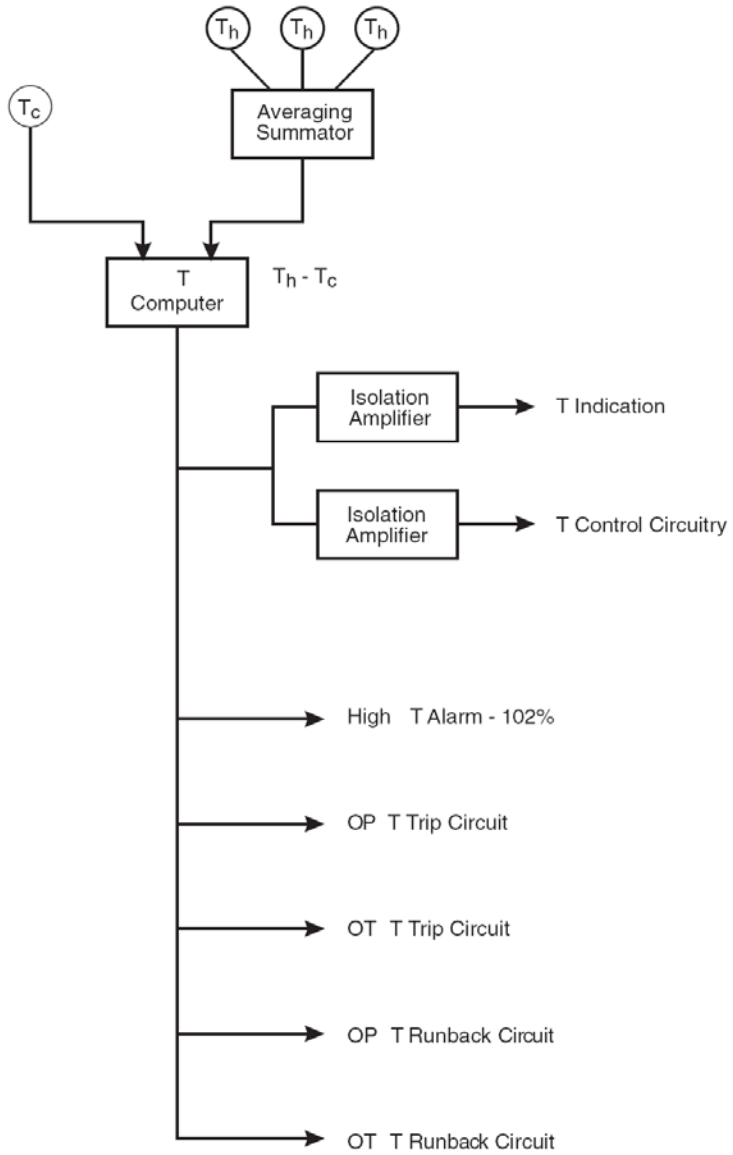

Graphics No: KC656

DELTA T PROTECTION CIRCUIT

NOTE: This Attachment uses Loop A as a reference.

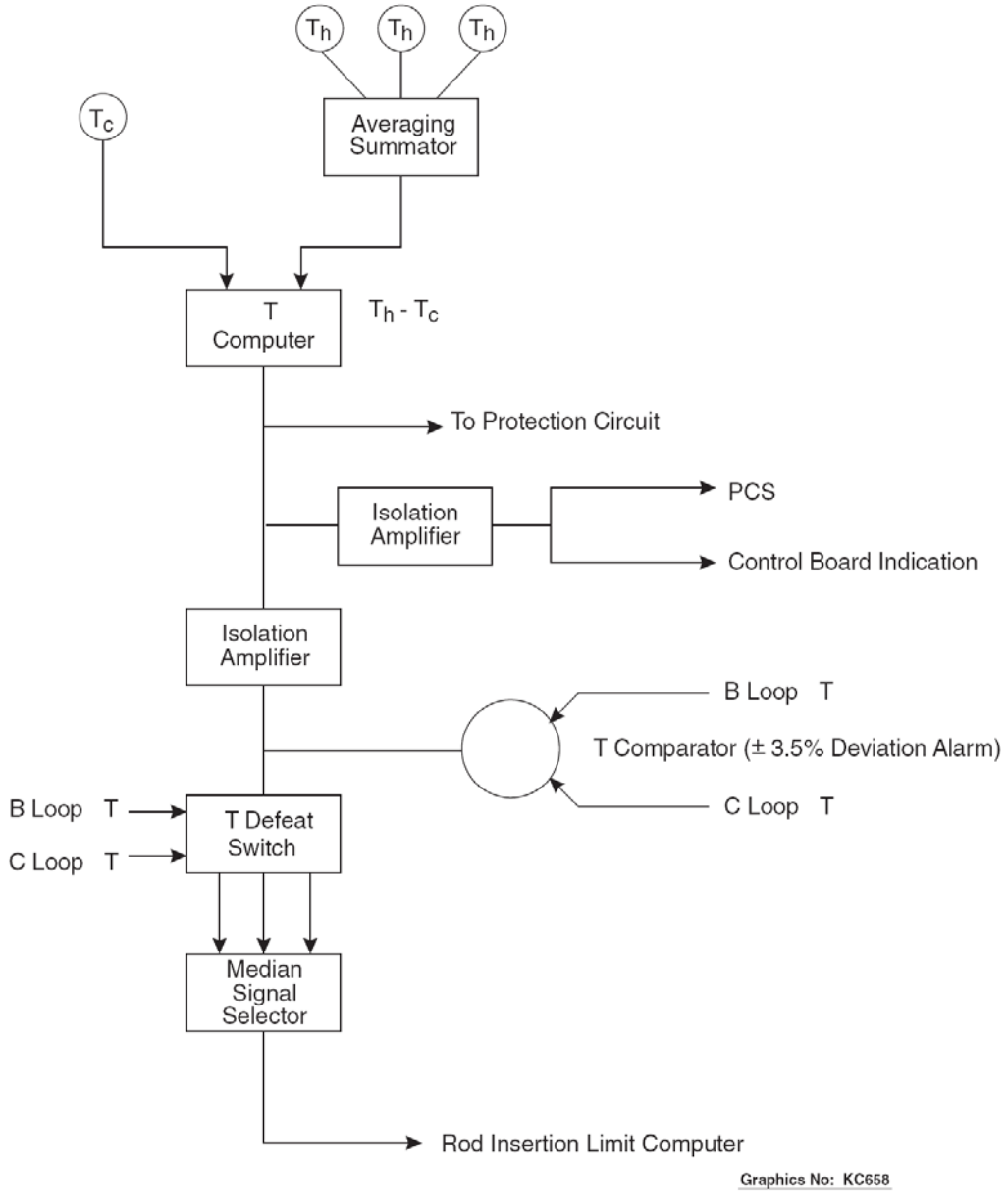

DELTA T CONTROL CIRCUIT

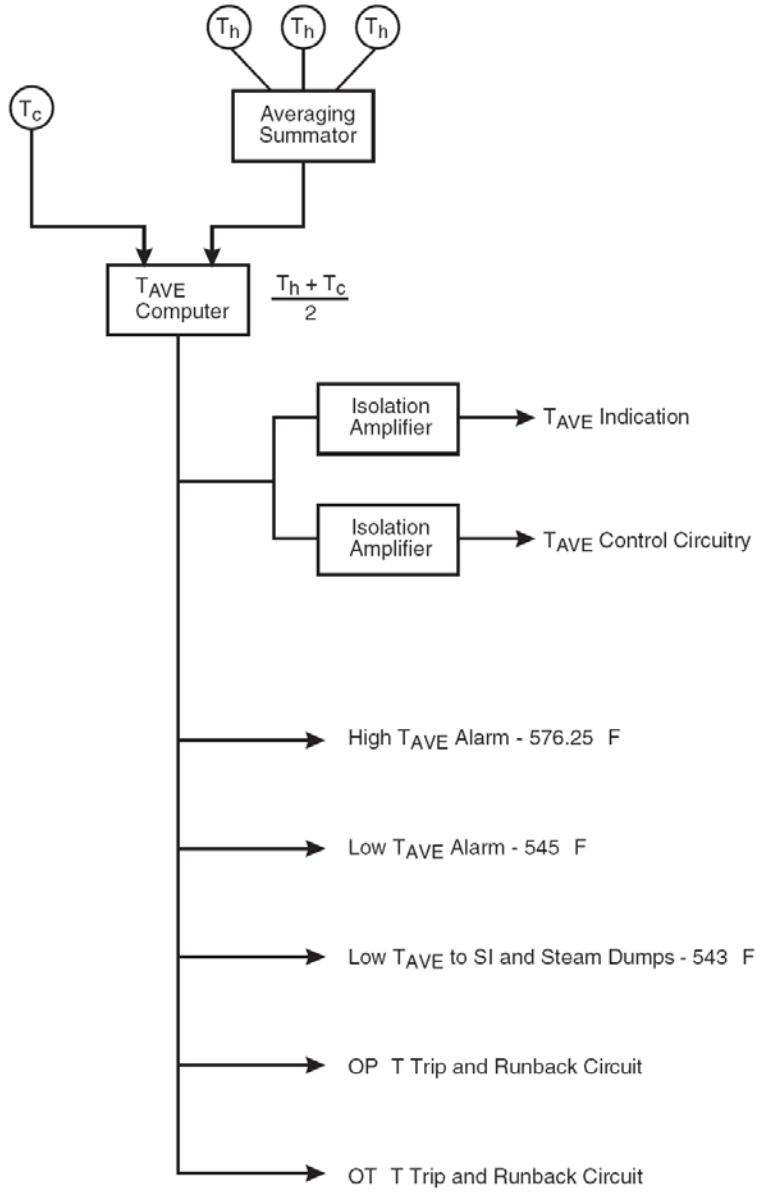

Graphics No: KC655A

T_{AVE} PROTECTION CIRCUIT

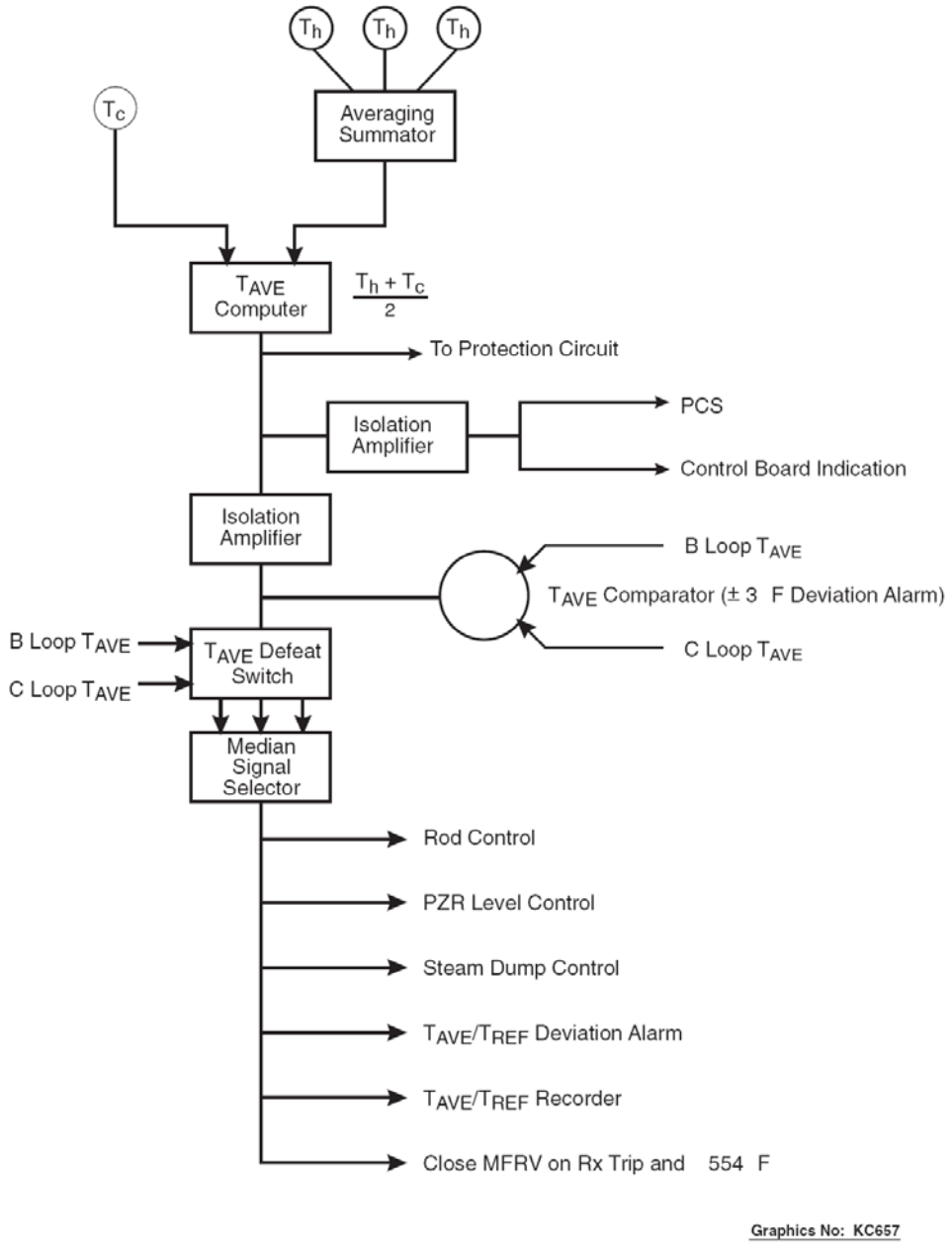

Graphics No: KC657

TAVE CONTROL CIRCUIT

1. 1-EE-TK-2A/2B, UNDERGROUND FUEL OIL STORAGE TANK

☐ • Immediately verify (and every eight hours thereafter) that there is no visible leakage at the tank or in the Underground Fuel Oil Pump House. The last known level indication should be verified to have been in specification. If the last level indication was in specification, and no leakage is observed, the tank may remain operable.

☐ • Immediate actions should be taken to restore the indicator to service. A clock should be started to verify level in the tank using the normal indication or an alternate indication, such that the Tech Spec Table 4.1-2A, Item 11 surveillance will be met. One type of alternate indication could be to lift the missile shield and verify level by hand.

2. 1/2-CS-TK-2, CHEMICAL ADDITION TANK

☐ • Immediately verify (and every eight hours thereafter) that there is no visible leakage at the CAT or in Safeguards. The last known level indication should be verified to have been specification. If the last level indication was in specification, and no leakage is observed, the tank may remain operable. The likelihood of internal leakage is very small, as long as the standby condition of the CAT valves is not disturbed.

☐ • Immediate actions should be taken to restore the indicator to service. The indication should be restored within 24 hours, or an alternate means used to check level.

☐ • One means to check level is to have I&C connect a Heise Gauge (calibrated in inches of water) to the drain connection at 1/2-CS-LT-101/201. The connection can be isolated using the existing ICVs. Pressure in inches of water column can be converted directly into level using the data in 1-CAL-005 or 2-CAL-010.

3. 1/2-CN-TK-3, EMERGENCY CONDENSATE MAKEUP TANK

☐ • Immediately verify (and every eight hours thereafter) that there is no visible leakage at the Makeup Tank or in Safeguards. The last known level indication should be verified to have been in specification. If the last level indication was in specification, and no leakage is observed, the tank may remain operable.

☐ • Tank level should be checked within 24 hours either by verifying that the tank is filled to overflowing, measuring actual level, or by checking pressure at the Booster Pumps and converting to height in feet. The mechanical indicators are not calibrated.

4. 1-FP-TK-1A/1B, FIRE PROTECTION AND DOMESTIC WATER TANK

☐ • If the tank level indication fails on one tank, and the tanks are cross-connected (normal operation), then verify level at the opposite tank. If the opposite tank level is stable and within Operations Logs specifications, and no leakage is seen, then the tank with the failed indication may remain operable. Otherwise, declare the tank with the failed indication inoperable.

☐ • If the tank level indication fails on one tank, and the tanks are NOT cross-connected, then verify immediately (and every eight hours thereafter) that no leakage exists at the tank and in the Fire Pump House. If the last known reading was within Operations Logs specifications, and no leakage is seen, then the tank with the failed indicator may remain operable. Otherwise, declare the tank with the failed indication inoperable.

( )-CH-LT-( )112

☐ • If ( )-CH-LT-( )112 fails high, ( )-CH-LCV-( )115A will open. Automatic swap-over of the CHG pump suction from the VCT to the RWST will not function.

☐ • If ( )-CH-LT-( )112 fails low, ( )-CH-LCV-( )115A will only automatically open from a high level signal from ( )-CH-LT-( )115. Automatic swap-over of the CHG pump suction from the VCT to the RWST will still function.

• ( )-CH-LT-( )112 provides input to the following:

☐ a. Controller ( )-CH-LC-( )115 for modulating ( )-CH-LCV-( )115A open at the setpoint set on the controller

☐ b. CHG pump suction swap over to the RWST at 13% (2/2)

( )-CH-LT-( )115

☐ • If ( )-CH-LT-( )115 fails high, ( )-CH-LCV-( )115A will open. Manual control of the blender will be required. Automatic swap-over of the CHG pump suction from the VCT to the RWST will not function.

☐ • If ( )-CH-LT-( )115 fails low, ( )-CH-LCV-( )115A will only automatically open from a high level signal from ( )-CH-LT-( )112. Automatic swap-over of the CHG pump suction from the VCT to the RWST will still function.

• ( )-CH-LT-( )115 provides input to the following:

☐ a. VCT High level divert of ( )-CH-LCV-( )115A to PDT at 85%

☐ b. VCT High level alarm at 82%

☐ c. Auto makeup to VCT stop at 34%

☐ d. Auto makeup to VCT start at 27%

☐ e. VCT Low level alarm at 24%

☐ f. CHG pump suction swap over to the RWST at 13% (2/2)

1.___ IF increase in Reactor Power caused by secondary transient, THEN GO TO Step 2. IF increase in Reactor Power caused by primary transient, THEN GO TO Step 6.

NOTE: During secondary transient conditions, the most reliable indications of Reactor Power are Core ΔT and Power Range NI. These indications should be used as the basis for Reactor Power until stable conditions have been reestablished.

2.___ Mitigate increases in Reactor Power caused by secondary transients by decreasing steam demand or Turbine load as follows:

- ☐ a) Reduce the Turbine Setter by an appropriate amount.
- ☐ b) Place the Load Rate Selector thumbwheel to 1% / min.
- ☐ c) Depress the GO pushbutton.

3.___ IF Turbine load can NOT be reduced using Operator Auto, THEN reduce Turbine load using the Valve Position Limiter.

4.___ IF Turbine load still can NOT be reduced, THEN do the following.

- ☐ a) Push the Turbine Manual pushbutton.
- ☐ b) Verify Turbine controls in Manual.
- ☐ c) Depress the GV down pushbutton to reduce GV position.

NOTE: The CALCALC 10 minute Average Power will lag actual Reactor Power following a transient, and may continue to increase even after core thermal power has been reduced to less than 100%.

5.___ Verify Reactor Power decreases to less than 100%.

- ☐ • Power Range NI power.
- ☐ • Core ΔT power
- ☐ • CALCALC Instantaneous power (if reliable)

6.___ Mitigate increases in Reactor Power caused by primary transients as follows. Enter N/A for Steps 6 through 9 if NOT applicable.

☐ a) Place the Rod Control Selector switch in Manual.

☐ b) Insert control rods.

NOTE: The CALCALC 10 minute Average Power will lag actual Reactor Power following a transient, and may continue to increase even after core thermal power has been reduced to less than 100%.

7.___ Verify Reactor Power decreases to less than 100%.

☐ • Power Range NI power.

☐ • Core ΔT power

☐ • CALCALC Instantaneous power (if reliable)

8.___ IF necessary, THEN initiate a normal boration to control ΔFlux.

9.___ WHEN Tave and Tref are within 1°F, THEN place control rods in Auto.

I. PROBABLE CAUSES

1. Instrumentation or controller failure

II. REFERENCES

1. Technical Specifications 3.1 and 3.7
2. VPAP-2802, Notifications and Reports
3. Technical Requirements Manual
4. ET CEP 99-0029, Reg Guide 1.97 Operability, Reportability, and Alternate Indications
5. ( )-OPT-RP-001, Check of Permissive Status Lights P-6, P-7, P-8, and P-10
6. ( )-OP-RP-001, Aligning Control System for Performance of Channel I, II, III, and IV Process and Protection Testing
7. 0-AP-1.00, Rod Control System Malfunction
8. ( )H-G5, STM GEN ( )A LVL ERROR
9. DCP 01-008, Instrument and Controls Upgrade Project, Unit 1
10. DCP 01-011, Plant Computer Replacement, Surry/Unit 2
11. PI S-2004-0548, Tanks with one Means of Level Indication
12. DCP 02-063, EHC Power Supply Replacement
13. DCP 04-073, Lube Oil Pressure Switch Redundancy
14. PI S-2005-0929, Failed Spray Valve (Step 6)
15. DCP 99-093, FC9, Replacement of Control Room Chart Recorders with Paperless Recorders

U.S. Nuclear Regulatory Commission
Surry Power Station

SR10301
Simulator Job Performance Measure 005.A4.01 (3.6/3.4)

Applicant_____ Start Time_____

Examiner_____

Date _____ Stop Time_____

Title

RESPOND TO A LOSS OF THE OPERATING RHR PUMP.

K/A: 005.A4.01 Ability to manually operate and/or monitor in the control room: Controls and indication for RHR pumps.

Applicability	**Estimated Time**	**Actual Time**
RO/SRO(I)/SRO(U)	12 minutes	

Conditions

- Task is to be PERFORMED in the simulator.
- 1-RH-P-1A was in service on "A" RHR HX. We just received annunciator B-G-6, RHR HX LO FLOW, and 1-RH-P-1A has tripped.

Standards

- 1-RH-P-1B started and RHR flow restored in accordance with 1-AP-27.00, Loss of Decay Heat Removal Capability.

Initiating Cues

- Trip of the operating RHR pump.
- Shift Manager direction.

Terminating Cues

- 1-AP-27.00, Loss of Decay Heat Removal Capability, step 14 completed.

Procedures

- 1-AP-27.00, Loss of Decay Heat Removal Capability.

Tools and Equipment

- None

Safety Considerations

- None

Simulator Setup

- Recall IC-323 OR
- Call up RHR IC and initialize. Place simulator in RUN.
- Verify "A" RHR pump running and "B" in AUTO.
- Verify 1-RH-FCV-1605 in auto with flowrate set at 3400 gpm.
- Implement malf for over-current trip of 1-RH-P-1A and allow annunciators B-G-6 & B-G-7 to alarm.
- Place simulator in FREEZE until ready to perform JPM.
- **Simulator Operator Note**: Place RED magnets on 1-RH-MOV-1700, 1701 and 1720A red bulbs. Place green magnets on SI accumulator green bulbs and verify magnets are correct for SI system for CSD. Place a white magnet and green arrow on the Pressurizer level cold cal channel 1-RC-LI-1460 and make sure the trend recorder is set for this channel.

Initiating Cues

- Trip of the operating RHR pump.
- Shift Manager direction.

Directions to the Applicant

- I am the Shift Manager and you are the Unit RO. The unit has been operating on RHR. 1-RH-P-1A, “A” RHR pump was in service on "A" RHR heat exchanger at 3400 gpm.
- We just received annunciator B-G-6, RHR HX LO FLOW, and 1-RH-P-1A has tripped. Here is a copy of 1-AP-27.00, Loss of Decay Heat Removal Capability. I need you to perform the necessary steps to address this condition and restore RHR flow. No RCS draindown evolutions are in progress and inventory is stable, not decreasing.
- When you complete 1-AP-27.00, please inform me.

Notes

PERFORMANCE CHECKLIST

Notes to the Evaluator

- Task critical elements are bolded and noted at the end of the step as CRITICAL STEP.
- *An additional instructor may be needed to silence and acknowledge alarms for the examinee.*
- **START TIME:**

STEP 1: ***CAUTIONS and NOTE PRIOR TO STEP 1*** **CAUTION:** • Loss of RHR due to a total loss of IA is addressed by 0-AP-40.00, NON-RECOVERABLE LOSS OF IA. • Loss of RHR may cause CTMT radiological and heat stress conditions to degrade. Local actions in CTMT should be coordinated with HP. • During solid plant operation, inadvertent actuation of the OPMS may occur if letdown is isolated. • If RCS boiling occurs, non-essential personnel should be evacuated from CTMT. **NOTE:** EPIPs may be applicable. **STANDARD:** • Acknowledges note and acknowledges cautions and recognizes that a total loss of IA is not occuring. **COMMENTS:**	_____ **SAT** _____ **UNSAT**
STEP 2: ***STEP 1*** - CHECKS RCS INVENTORY - DECREASING. • PRZR level - DECREASING • Standpipe level - DECREASING • Reactor cavity level - DECREASING • RCS Narrow Range level - DECREASING • CTMT sump level - INCREASING • Makeup rate - INCREASING • PRT level, pressure, or temperature - INCREASING • PDTT level - INCREASING • RWST level - INCREASING	_____ **SAT** _____ **UNSAT**

STANDARD: • Notes that there are no draindown evolutions in progress and inventory is stable based on the directions given. • Checks Containment Sump level (1-DA-LI-100) is stable and not increasing. • Checks PRT conditions (level, LI-1-470; pressure, PI-1-472; and temperature, TI-1-471) are stable and not increasing. • Checks PDTT level (1-DG-LI-107) is stable and not increasing. • Checks RWST level stable. • Determines that RCS inventory is NOT decreasing and performs RNO to transition to procedure STEP 4. **EVALUATOR'S NOTE:** If asked, all indications are as you see them. If asked, no personnel are in Containment. If asked, cavity is not flooded up. **COMMENTS:**	
STEP 3: ***Step 4 –*** VERIFY RHR PUMP - ONE RUNNING **STANDARD:** • Checks that no RHR pumps are running by observing zero amps indicated and 1-RH-P-1A has red and amber lights lit, 1-RH-P-1B has green light lit. Goes to RNO. **EVALUATOR'S NOTE: N/A** **COMMENTS:**	_____ **SAT** _____ **UNSAT**
STEP 4: ***Step 4RNO -*** IF Emergency Bus power is available, THEN do the following: a) Manually close RH control valves: • 1-RH-FCV-1605 • 1-RH-HCV-1758 b) Start one RHR pump. c) Adjust RH control valves to return flow to pre-event rate: • 1-RH-FCV-1605 • 1-RH-HCV-1758	_____ **SAT** _____ **UNSAT**

STANDARD: • Places 1-RH-FCV-1605 in manual and closes valve. • Notes setpoint on ten turn pot for 1-RH-HCV-1758 (9.8) and then closes 1-RH-HCV-1758 using ten turn pot. • **Starts 1-RH-P-1B by taking control switch to the start position and verifying amp are indicated. This is a Critical Task.** • **Opens 1-RH-FCV-1605 until flow is approximately 3400 gpm and then places in AUTO. This is a Critical Task.** • Places ten turn pot for 1-RH-FCV-1758 at pre-event setpoint of 9.8. **EVALUATOR'S NOTE: N/A** **COMMENTS:**	
STEP 5: ***Step 5 -*** VERIFY RHR FLOW - INDICATED ON RHR SYS FLOW • 1-RH-FI-1605 **STANDARD:** • Checks RHR flow at approximately 3400 gpm on 1-RH-FI-1605. **EVALUATOR'S NOTE: N/A** **COMMENTS:**	_____ **SAT** _____ **UNSAT**
STEP 6: ***Step 6 –*** CHECK RHR PUMP - VORTEXING • Flow indication on 1-RH-FI-1605 - OSCILLATING • Amperage indication - OSCILLATING **STANDARD:** • Checks flow steady on 1-RH-FI-1605 and amps steady for 1-RH-P-1B. • Goes to step 6 RNO. **EVALUATOR'S NOTE: N/A** **COMMENTS:**	_____ **SAT** _____ **UNSAT**

STEP 7: ***Step 12 -*** CHECK RHR HEAT SINK: a) Flow on 1-RH-FI-1605 - NORMAL b) CC to RHR HX 1) RHR HX CC Outlet HDR Flow - NORMAL • 1-CC-FI-110A OR • 1-CC-FI-110B 2) RHR HX CC Outlet HDR TEMP - NORMAL • 1-CC-TI-109A OR • 1-CC-TI-109B **STANDARD:** • Checks flow on 1-RH-FI-1605 indicating normal about 3400 gpm. • Checks CC to RHR HX on 1-CC-FI-110A normal. • Checks RHR HX CC Outlet Hdr Temp on 1-CC-TI-109A normal. **EVALUATOR'S NOTE:** If asked, pre-event flow on 1-CC-FI-110A was 4700 and temperature on 1-CC-TI-109A was approximately 88 degrees. **COMMENTS:**	_____ **SAT** _____ **UNSAT**
STEP 8: ***Step 13 –*** VERIFY RCS TEMPERATURE - STABLE OR DECREASING **STANDARD:** • Checks RCS temperature and/or RHR temperature stable or decreasing. **EVALUATOR'S CUE: N/A** **COMMENTS:**	_____ **SAT** _____ **UNSAT**

STEP 9: ***Step 14 –*** RETURN TO PROCEDURE IN EFFECT **STANDARD:** • Operator Exits 1-AP-27.00. **EVALUATOR'S NOTE: N/A** **COMMENTS:**	_____ **SAT** _____ **UNSAT**
STEP 10: REPORT TO SHIFT SUPERVISOR (EVALUATOR). **STANDARD:** Verbal status report that 1-AP-27.00, Loss of Decay Heat Removal Capability is complete and RHR flow has been restored. **EVALUATOR'S NOTE: N/A** **STOP TIME:** **COMMENTS:**	_____ **SAT** _____ **UNSAT**

STOP TIME:

_____

_____

_____

_____

_____

_____

Operator Directions Handout
(TO BE READ TO APPLICANT BY EXAMINER)

Task

- Task is to be performed in the simulator.
- Perform 0-AP-27.00, LOSS OF DECAY HEAT REMOVAL CAPABILITY, to restore RHR flow to the core by starting 1-RH-P-1B.

Directions

The evaluator will explain the initial conditions of the task to be performed and will provide the initiating cue. Ensure you indicate to the evaluator when you understand your assigned task

Initial Conditions

- 1-RH-P-1A was in service on "A" RHR HX. We just received annunciator B-G-6, RHR HX LO FLOW, and 1-RH-P-1A has tripped.

Initiating Cues

- I am the Shift Manager and you are the Unit RO. The unit has been operating on RHR. 1-RH-P-1A, “A” RHR pump was in service on "A" RHR heat exchanger at 3400 gpm.
- We just received annunciator B-G-6, RHR HX LO FLOW, and 1-RH-P-1A has tripped. Here is a copy of 1-AP-27.00, Loss of Decay Heat Removal Capability. I need you to perform the necessary steps to address this condition and restore RHR flow. No RCS draindown evolutions are in progress and inventory is stable, not decreasing.
- When you complete 1-AP-27.00, please inform me.

Operator Directions Handout
(TO BE GIVEN TO APPLICANT)

Initial Conditions

- 1-RH-P-1A was in service on "A" RHR HX. We just received annunciator B-G-6, RHR HX LO FLOW, and 1-RH-P-1A has tripped.

Initiating Cues

- I am the Shift Manager and you are the Unit RO. The unit has been operating on RHR. 1-RH-P-1A, “A” RHR pump was in service on "A" RHR heat exchanger at 3400 gpm.
- We just received annunciator B-G-6, RHR HX LO FLOW, and 1-RH-P-1A has tripped. Here is a copy of 1-AP-27.00, Loss of Decay Heat Removal Capability. I need you to perform the necessary steps to address this condition and restore RHR flow. No RCS draindown evolutions are in progress and inventory is stable, not decreasing.
- When you complete 1-AP-27.00, please inform me.

SURRY POWER STATION

ABNORMAL PROCEDURE

NUMBER	PROCEDURE TITLE	REVISION
1-AP-27.00	LOSS OF DECAY HEAT REMOVAL CAPABILITY (WITH 11 ATTACHMENTS)	20
		PAGE 1 of 18

PURPOSE

To provide guidance when the RHR System fails to remove decay heat.

ENTRY CONDITIONS

1) No RHR pumps running due to failure or loss of power.
2) Air-binding of the operating RHR pump as indicated by any of the following:
   - Motor amperage oscillations
   - Flow oscillations
   - Excessive pump noise
   - RHR HX LO FLOW annunciator, 1B-G6
3) Failure of the RHR system to control RCS temperature due to loss of Component Cooling or valve failure.
4) Loss of RCS inventory while on RHR as indicated by any of the following:
   - Decreasing Pressurizer Level
   - Increasing PRT level, pressure, or temperature
   - Local observation of RCS inventory loss
   - CTMT SUMP HI LVL annunciator, 1B-A3
   - SHUTDOWN COOLING LO LVL annunciator, 1B-G8
   - Decreasing trend on 1-RC-LR-105, COLD SHUTDOWN RCS LEVEL - NARROW RANGE
5) Transition from 1-FR-C.3, RESPONSE TO SATURATED CORE COOLING.

CONTINUOUS USE

STEP	ACTION/EXPECTED RESPONSE	RESPONSE NOT OBTAINED

* *

CAUTION:
- Loss of RHR due to a total loss of IA is addressed by 0-AP-40.00, NON-RECOVERABLE LOSS OF IA.
- Loss of RHR may cause CTMT radiological and heat stress conditions to degrade. Local actions in CTMT should be coordinated with HP.
- During solid plant operation, inadvertent actuation of the OPMS may occur if letdown is isolated
- If RCS boiling occurs, non-essential personnel should be evacuated from CTMT.

* *

NOTE: EPIPs may be applicable.

1. ___ CHECK RCS INVENTORY - DECREASING — ☐ GO TO Step 4.

   ☐ • PRZR level - DECREASING
   ☐ • Standpipe level - DECREASING
   ☐ • Reactor cavity level - DECREASING
   ☐ • RCS Narrow Range level - DECREASING

   ☐ • CTMT sump level - INCREASING
   ☐ • Makeup rate - INCREASING
   ☐ • PRT level, pressure, or temperature - INCREASING
   ☐ • PDTT level - INCREASING

   ☐ • RWST level - INCREASING

STEP	ACTION/EXPECTED RESPONSE	RESPONSE NOT OBTAINED
2. ___	ATTEMPT TO IDENTIFY AND STOP INVENTORY LOSS:	
☐	a) Stop any known draining evolution	
	b) Close RHR LETDOWN FLOW valve	☐ b) Close 1-CH-PCV-1145.
☐	• 1-RH-HCV-1142	
	c) Close or verify closed RCS loop drains	
☐	• 1-RC-HCV-1557A	
☐	• 1-RC-HCV-1557B	
☐	• 1-RC-HCV-1557C	
☐	d) Increase RCS makeup	
	e) Terminate any activities that could cause leakage	
☐	• Valve alignments	
☐	• Periodic testing	
☐	• Maintenance	
☐	f) Coordinate local walkdowns with HP to identify and isolate RCS leakage	
☐	g) Check RCS level - STABLE OR INCREASING	☐ g) IF RCS temperature greater than 200°F, THEN GO TO 1-AP-16.01, SHUTDOWN LOCA.
		☐ IF RCS temperature less than 200°F, THEN align any available SI flowpath to maintain stable or increasing RCS level.
3. ___	GO TO STEP 15	

STEP	ACTION/EXPECTED RESPONSE	RESPONSE NOT OBTAINED
4. ___	VERIFY RHR PUMP - ONE RUNNING	IF Emergency Bus power is available, THEN do the following: a) Manually close RH control valves: ☐ • 1-RH-FCV-1605 ☐ • 1-RH-HCV-1758 ☐ b) Start one RHR pump. c) Adjust RH control valves to return flow to pre-event rate: ☐ • 1-RH-FCV-1605 ☐ • 1-RH-HCV-1758 ☐ d) IF an RHR pump can NOT be started, THEN GO TO Step 16. IF RHR pump NOT running due to loss of Emergency Bus power, THEN do the following: ☐ a) Verify initiated or initiate 1-AP-10.07, LOSS OF UNIT 1 POWER. ☐ b) GO TO Step 16.
5. ___	VERIFY RHR FLOW - INDICATED ON RHR SYS FLOW ☐ • 1-RH-FI-1605	Verify opened or open the following valves: ☐ • 1-RH-MOV-1700 ☐ • 1-RH-MOV-1701 ☐ • 1-RH-MOV-1720A ☐ • 1-RH-MOV-1720B
6. ___	CHECK RHR PUMP - VORTEXING ☐ • Flow indication on 1-RH-FI-1605 - OSCILLATING ☐ • Amperage indication - OSCILLATING	☐ GO TO Step 12.

STEP	ACTION/EXPECTED RESPONSE	RESPONSE NOT OBTAINED

* *

CAUTION: RCS temperature may increase if RHR flow rate is less than required based on time after shutdown. (Attachment 1)

* *

7. ___ REDUCE RHR FLOW TO STOP VORTEXING

☐ • Use 1-RH-FCV-1605 in MANUAL

OR

☐ • Use 1-RH-HCV-1758

8. ___ CHECK RHR PUMP - STILL VORTEXING — ☐ GO TO Step 12.

9. ___ CHECK RCS LEVEL - WITHIN ACCEPTABLE REGION — ☐ Restore RCS level to Acceptable Region of Attachment 2 or 3.

☐ • 1-RC-LI-100A (Attachment 2)

OR

☐ • 1-RC-LR-105 (Attachment 3)

STEP	ACTION/EXPECTED RESPONSE	RESPONSE NOT OBTAINED
10. ___	VERIFY RHR PUMPS - BOTH AVAILABLE	Restore RHR pump: ☐ a) Stop pump. ☐ b) Verify RHR flow - NONE INDICATED. c) Vent pump. ☐ • 1-RH-P-1A, 1-RH-9 ☐ • 1-RH-P-1B, 1-RH-3 ☐ d) Restart pump. ☐ e) IF RHR pump can NOT be restored, THEN GO TO Step 16. ☐ f) IF RHR pump is restored, THEN GO TO Step 12.
11. ___	RESTORE RHR PUMPS: ☐ a) Stop vortexing pump ☐ b) Verify RHR flow - NONE INDICATED ☐ c) Manually close 1-RH-FCV-1605 and 1-RH-HCV-1758 ☐ d) Start other RHR pump e) Adjust RH control valves to return flow to pre-event rate: ☐ • 1-RH-FCV-1605 ☐ • 1-RH-HCV-1758	☐ e) GO TO Step 16.

STEP	ACTION/EXPECTED RESPONSE	RESPONSE NOT OBTAINED
12.___	CHECK RHR HEAT SINK:	
☐	a) Flow on 1-RH-FI-1605 - NORMAL	☐ a) Adjust 1-RH-HCV-1758 and 1-RH-FCV-1605 to control flow.
	b) CC to RHR HX	
	1) RHR HX CC Outlet HDR Flow - NORMAL	☐ 1) Verify opened or open 1-CC-TV-109A or 1-CC-TV-109B.
☐	• 1-CC-FI-110A OR	☐ IF TV can NOT be opened due to a localized loss of IA, THEN locally open IAW 0-FCA-16.00, LOCAL OPERATION OF AIR OPERATED VALVES.
☐	• 1-CC-FI-110B	☐ IF the in-service RHR HX TV can NOT be opened, THEN place the other RHR HX in service IAW 1-OP-RH-001, RHR OPERATIONS. IF CC flow can NOT be established to either RHR HX, THEN do the following:
		☐ a. Evaluate initiating 1-AP-15.00, LOSS OF COMPONENT COOLING.
		☐ b. GO TO Step 16.
	2) RHR HX CC Outlet HDR TEMP - NORMAL	2) Do the following:
☐	• 1-CC-TI-109A OR	☐ a. Verify open or open 1-SW-MOV-102A or B.
☐	• 1-CC-TI-109B	☐ b. Adjust SW flow to CC HXs.
		☐ IF temperature can NOT be stabilized, THEN GO TO Step 16.

STEP	ACTION/EXPECTED RESPONSE	RESPONSE NOT OBTAINED
13. ___	VERIFY RCS TEMPERATURE - STABLE OR DECREASING	☐ Adjust 1-RH-HCV-1758 to control temperature. ☐ IF temperature can NOT be stabilized, THEN GO TO Step 16.
14. ___	RETURN TO PROCEDURE IN EFFECT	

STEP	ACTION/EXPECTED RESPONSE	RESPONSE NOT OBTAINED

* *

CAUTION: RCS temperature may increase if RHR flow rate is less than required based on time after shutdown. (Attachment 1)

* *

NOTE:
- Changes in RCS pressure can result in vessel water level changes not shown by the RCS vessel level indicator.
- Any dilution of the RCS should be stopped until RHR flow has been reestablished.

15. ___ CHECK IF RHR PUMPS SHOULD BE STOPPED:

☐ a) RHR Pumps - ANY RUNNING

b) RCS level - WITHIN ACCEPTABLE REGION

☐ • 1-RC-LI-100A (Attachment 2)

OR

☐ • 1-RC-LR-105 (Attachment 3)

c) RHR pumps - VORTEXING

☐ • Flow indication on 1-RH-FI-1605 - OSCILLATING

☐ • Amperage indication - OSCILLATING

☐ d) Stop RHR pumps

☐ a) GO TO Step 16.

b) Do the following:

☐ • Restore RCS level to Acceptable Region of Attachment 2 or 3

OR

☐ • Reduce RHR flow to Acceptable Region of Attachment 2 or 3 using 1-RH-FCV-1605 or 1-RH-HCV-1758

☐ c) RETURN TO appropriate plant procedure.

STEP	ACTION/EXPECTED RESPONSE	RESPONSE NOT OBTAINED

* *

CAUTION: Securing CTMT purge and closing the Personnel Hatch door(s) must be closely coordinated.

* *

16. ___ INITIATE ACTIONS TO PROTECT PERSONNEL WORKING IN CTMT:

- ☐ a) Notify HP
- ☐ b) Evacuate non-essential personnel in CTMT
- ☐ c) Periodically monitor CTMT radiation conditions
- ☐ d) Verify CTMT purge - SECURED — ☐ d) Secure CTMT purge.

STEP	ACTION/EXPECTED RESPONSE	RESPONSE NOT OBTAINED
17. ___	INITIATE ACTIONS TO ESTABLISH CTMT CLOSURE WHILE CONTINUING WITH PROCEDURE	
	☐ a) If initially at Reduced Inventory, establish CTMT closure IAW 1-OSP-CT-214, Containment Closure for Reduced or Potentially Reduced Inventory Conditions (Refer to Attachments 6 and 7 1-OSP-CT-214)	
	☐ b) If initially at Decreased Inventory, establish CTMT closure IAW 1-OP-CT-002, Containment Penetration Breach Log	
	☐ c) If initially not at Reduced or Decreased Inventory, establish CTMT closure IAW Shift Supervision direction	
	☐ d) Check CTMT Closure Team - ESTABLISHED	d) Do the following: ☐ 1) Direct Mechanical Foreman to initiate 0-MCM-1202-06, Emergency Closure of the Equipment Hatch, as necessary. ☐ 2) GO TO Step 17f.
	☐ e) Direct CTMT Closure Team to initiate 0-MCM-1202-06, Emergency Closure of the Equipment Hatch, as necessary	
	☐ f) Verify closed or close at least one door of the Personnel Hatch	
18. ___	START AVAILABLE CTMT AIR RECIRC FANS	

STEP	ACTION/EXPECTED RESPONSE	RESPONSE NOT OBTAINED

NOTE: • Steps 19 through 22 establish an alternate mode of decay heat removal.

• Attachment 10 may be used for cooling the RCS with the SFP and RWST coolers.

19. ___ CHECK THE FOLLOWING - AVAILABLE TO SUPPORT NATURAL CIRCULATION COOLING:

☐ GO TO Step 21.

☐ • 1-OSP-ZZ-003, Attachment 2 equipment - AVAILABLE

OR

☐ • 1-OSP-ZZ-004, Attachment 2 equipment - AVAILABLE

20. ___ GO TO ATTACHMENT 4

STEP	ACTION/ EXPECTED RESPONSE	RESPONSE NOT OBTAINED
21. ___	CHECK THE FOLLOWING - AVAILABLE TO SUPPORT REFLUX COOLING:	
☐	• 1-OSP-ZZ-003, Attachment 3 OR 1-OSP-ZZ-004, Attachment 4 - EQUIPMENT AVABILABLE	
☐	• RCS inventory - NOT DECREASING	
☐		IF CHG and LHSI Pumps NOT available due to electrical or other reasons, THEN GO TO Attachment 8 to align gravity feed. IF forced flow available, THEN do the following: a) IF PRZR available, THEN do the following: 1) Increase PRZR level to between 40 and 60% using any of the following:
☐		• Normal Charging
☐		• LHSI Pump
☐		• CHG Pump HHSI
☐		• Charging Crosstie
☐		2) WHEN RHR system available, THEN GO TO Step 23.
☐		3) IF RCS approaches saturation, THEN GO TO Attachment 6.
		b) IF PRZR NOT available, THEN do the following:
☐		1) WHEN RHR system available, THEN GO TO Step 23.
☐		2) IF RCS approaches saturation, THEN GO TO Attachment 6.
22. ___	GO TO ATTACHMENT 5	

STEP	ACTION/EXPECTED RESPONSE	RESPONSE NOT OBTAINED

* *

CAUTION:
- RCS standpipe level indication, 1-RC-LI-100A, will not indicate below actual RCS level of 12.1 FT.
- Personnel working in CTMT should be warned before the RCS is refilled to avoid inadvertent contamination of personnel working near RCS openings.
- Only borated water should be added to the RCS to maintain adequate shutdown margin.

* *

23. ___ CHECK RCS LEVEL — ☐ GO TO Step 25.

☐ • Greater than 12.1 FT on 1-RC-LI-100A

OR

☐ • Greater than 12 FT 1 IN on 1-RC-LR-105

24. ___ GO TO STEP 26

STEP	ACTION/EXPECTED RESPONSE	RESPONSE NOT OBTAINED

25. ___ REFILL THE RCS:

☐ a) Align and start at least one CHG pump for cold leg injection

☐ a) Align and start one LHSI pump for cold leg injection.

IF a cold leg flow path is NOT available, THEN make up to the RCS using one of the following:

☐ 1) CHG pump to hot leg.

☐ 2) LHSI pump to hot leg.

☐ 3) RWST gravity feed or VCT overpressure feed.

☐ 4) Any other CHG flowpath.

b) Refill the RCS until level is greater than required:

☐ • 12.1 FT on 1-RC-LI-100A

OR

☐ • 12 FT 1 IN on 1-RC-LR-105

NOTE: • Before additional actions are taken to obtain alternate cooling sources, the time to boiling in the RCS should be considered when deciding how much time is needed to vent the RHR system.

• If adequate time to completely vent the RHR system is not available, air can be swept out of the RHR lines by filling the RCS to 13.5 FT, (off-scale high on 1-RC-LR-105) verifying 10°F RCS subcooling, and running an RHR pump at a flow rate greater than 2950 GPM.

26. ___ VENT RHR SYSTEM AS NECESSARY:

☐ a) Maintain RCS level while venting RHR system

☐ b) Locally vent from 1-RH-42

STEP	ACTION/EXPECTED RESPONSE	RESPONSE NOT OBTAINED

* *

CAUTION: Extended operation at low RHR flowrates may cause cavitation concerns in 1-RH-FCV-1605.

* *

NOTE:
- Starting an RHR pump may result in a decrease in RCS level due to shrink or void collapse.
- The RCS level necessary to operate RHR pumps is a function of RHR flow. Attachment 2 or 3 provide guidance for determining the required RCS level.

27. ___ RESTORE RHR FLOW:

a) Close RH control valves

☐ • 1-RH-HCV-1758
☐ • 1-RH-FCV-1605

☐ b) Start one RHR pump

☐ c) Maintain RCS level IAW Attachment 2 or 3

☐ d) Increase RHR bypass flow to the desired flowrate

(STEP 27 CONTINUED ON NEXT PAGE)

STEP	ACTION/EXPECTED RESPONSE	RESPONSE NOT OBTAINED
27.	RESTORE RHR FLOW: (Continued)	
	☐ e) Check RHR flow - RESTORED	e) Do the following: ☐ 1) Continue to monitor RCS temperature. 2) Consult with TSC or plant staff and GO TO the appropriate Attachment for alternate means of decay heat removal: ☐ • Attachment 4, Natural Circulation Cooling ☐ • Attachment 5, Reflux Boiling Heat Removal ☐ • Attachment 6, Forced Feed Cooling ☐ • Attachment 8, Gravity Feed Cooling
	☐ f) Terminate alternate mode of decay heat removal	
	☐ g) Control RCS cooldown rate at less than 50°F/hr	
28. ___	CHECK IF RCS MAKEUP SHOULD BE REDUCED:	
	☐ a) RCS temperature - LESS THAN 200°F	☐ a) Continue cooling with RHR.
	☐ b) RCS level - STABLE OR INCREASING	☐ b) Control charging flow to maintain RCS level IAW Attachment 2 or 3.
29. ___	CHECK RCS TEMPERATURE - LESS THAN 140°F	☐ Continue cooling with RHR. RETURN TO Step 27g.

STEP	ACTION/EXPECTED RESPONSE	RESPONSE NOT OBTAINED

30. ___ RETURN TO PROCEDURE IN EFFECT

- END -

NUMBER 1-AP-27.00	ATTACHMENT TITLE RHR FLOW REQUIREMENT VERSUS TIME AFTER SHUTDOWN	ATTACHMENT 1
REVISION 20		PAGE 1 of 1

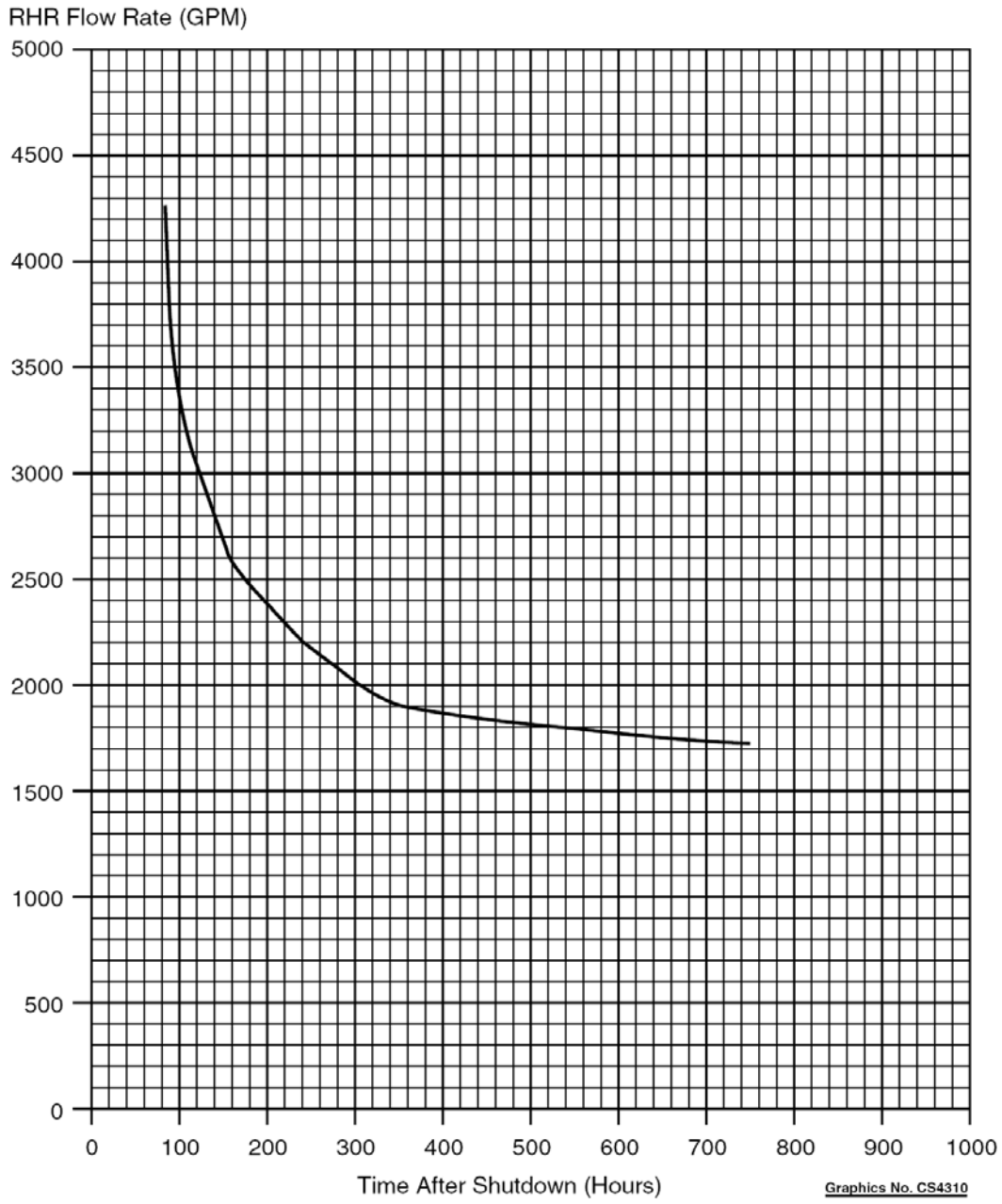

NUMBER 1-AP-27.00	ATTACHMENT TITLE	ATTACHMENT 2
REVISION 20	MINIMUM RCS LEVEL VERSUS RHR FLOW (1-RC-LI-100A)	PAGE 1 of 1

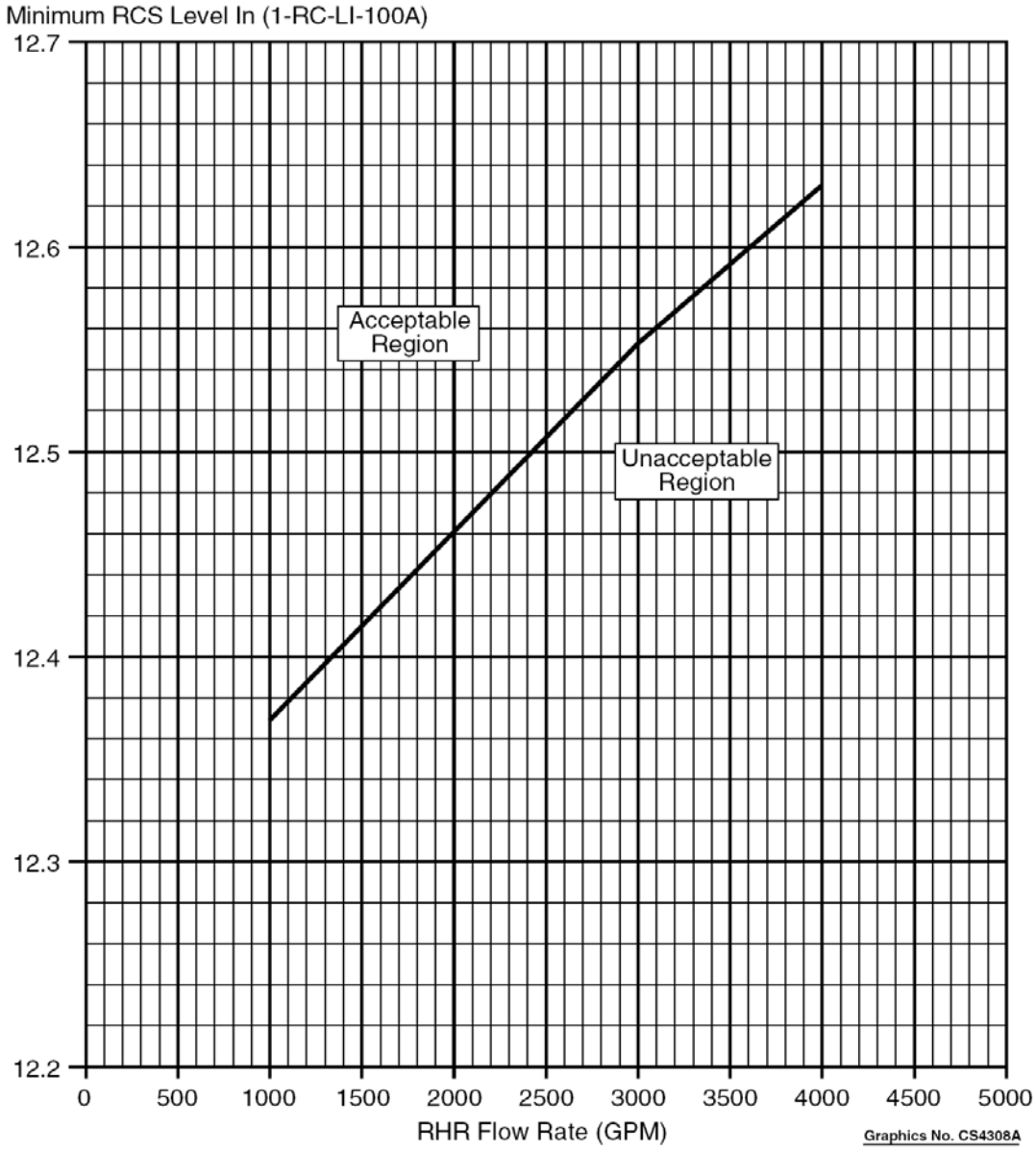

NUMBER 1-AP-27.00	ATTACHMENT TITLE	ATTACHMENT 3
REVISION 20	MINIMUM RCS LEVEL VERSUS RHR FLOW (1-RC-LR-105)	PAGE 1 of 1

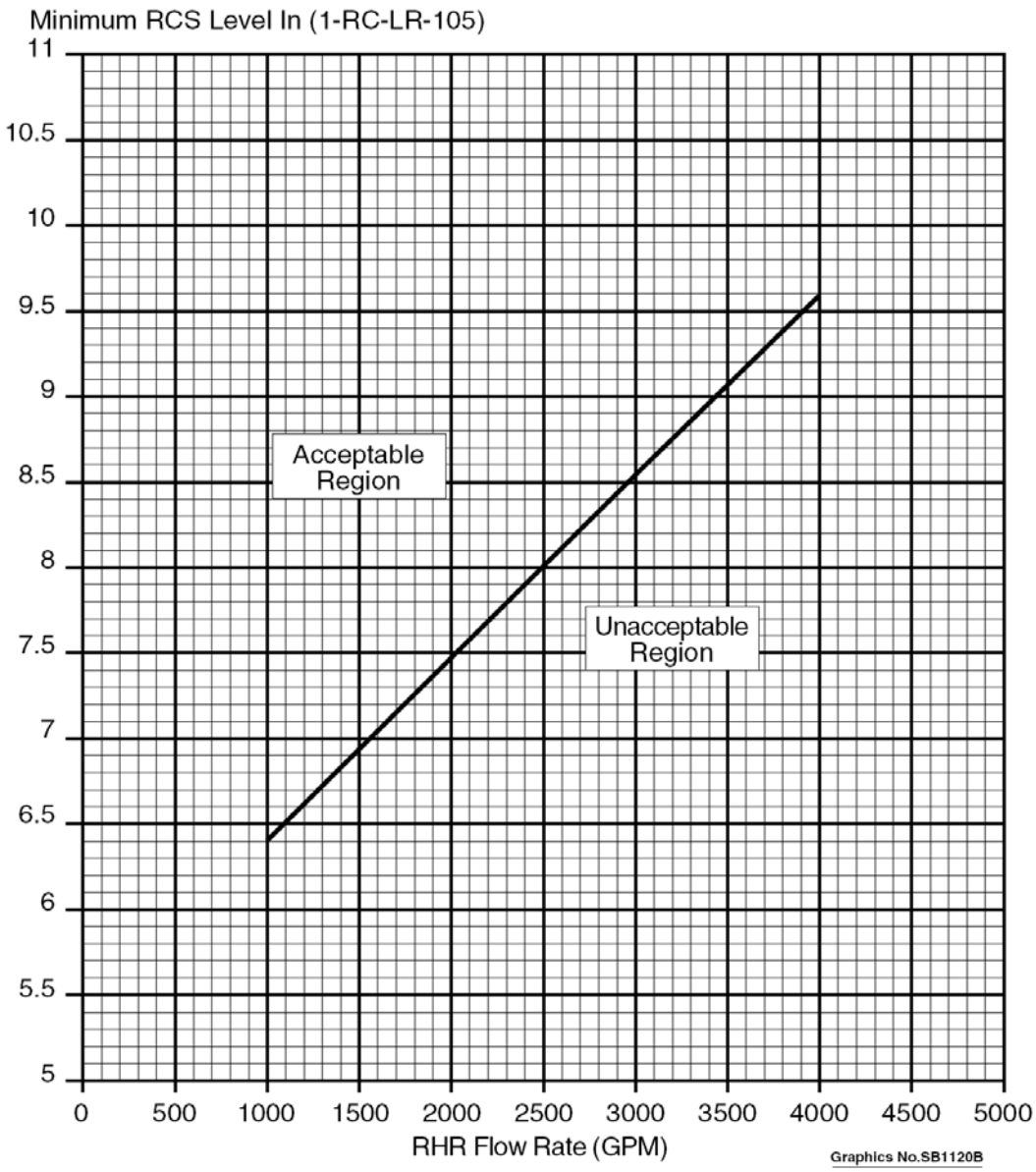

NOTE: The RCS must be pressurized and SG tubes filled for Natural Circulation cooling to be effective.

1. ___ Attempt to start an RCP IAW 1-OP-RC-001, STARTING AND RUNNING ANY RCP. IF an RCP can be started, THEN RETURN TO procedure in effect. IF an RCP can NOT be started, THEN GO TO Step 2.

2. ___ Verify running or start three CRDM fans.

3. ___ Control SG narrow range level between 11 and 65% in at least one SG:

☐ • For AFW, control flow using 1-FW-MOV-151A through F.

☐ • For CN, control flow using 1-FW-HCV-155A, B, or C.

4. ___ Control Pressurizer level between 15 and 75% using charging and letdown.

5. ___ Monitor RCS conditions for satisfactory Natural Circulation cooling:

☐ • RCS Subcooling based on CETCs - GREATER THAN 30°F

☐ • CETCs - STABLE OR SLOWLY DECREASING

☐ • SG pressure - STABLE OR SLOWLY DECREASING

☐ • WR hot leg temperature - STABLE OR SLOWLY DECREASING

☐ • WR cold leg temperature - AT SATURATION FOR SG PRESSURE

6. ___ IF any of the above parameters indicate a loss of Natural Circulation, THEN slowly increase steam flow rate using Steam Dumps or SG PORVs.

7. ___ IF RCS cooldown is desired, THEN maintain cooldown rate less than or equal to 25°F/HR.

8. ___ WHEN RHR system available, THEN GO TO procedure Step 23.

9. ___ IF Natural Circulation can NOT control RCS temperature AND CETC temperatures are approaching saturation, THEN GO TO Attachment 5.

NOTE:
- The number of SGs required for reflux cooling are as follows:
  - 3 SGs, if shutdown less than 75 hours
  - 2 SGs, if shutdown greater than or equal to 75 hours and less than 375 hours
  - 1 SG, if shutdown greater than or equal to 375 hours
- Reflux cooling should occur when RCS temperature is maintained between 280 and 290°F.

1. ___ Send an Operator to CTMT to close 1-RC-184, Reactor Vessel Head vent isolation.

2. ___ Verify closed or close both PRZR PORVs.

3. ___ Allow RCS temperature to increase to between 280 and 290°F.

4. ___ WHEN RCS temperature increases to between 280 and 290°F, THEN increase steam rate of SG(s) to maintain this temperature using SG PORV(s) or Steam Dumps to the Main Condenser.

5. ___ Control SG narrow range level between 11 and 65% in the required number of SGs:

☐ • For AFW, control flow using 1-FW-MOV-151A through F.

☐ • For CN, control flow using 1-FW-HCV-155A, B, or C.

NOTE: RCS makeup will be needed only to account for losses due to leakage.

6. ___ Control RCS level within the range of 1-RC-LR-105, COLD SHUTDOWN RCS LEVEL NARROW RANGE, using any of the following:

☐ • Normal Charging

☐ • RCP Seal Injection

☐ • High Head or Low Head SI flow to the Cold or Hot legs

7. ___ Monitor RCS conditions for satisfactory Reflux cooling:

☐ • RCS temperature - STABLE OR SLOWLY DECREASING

8. ___ WHEN RHR System available, THEN GO TO procedure Step 23.

9. ___ IF Reflux Boiling Heat Removal can NOT control RCS temperature, THEN GO TO Attachment 6.

* *

CAUTION:
- Personnel working in CTMT should be warned before the RCS is filled to avoid inadvertent contamination of personnel working near RCS openings.
- Only borated water should be added to the RCS to maintain adequate shutdown margin.
- The intent of this Attachment is to maintain subcooled conditions in the RCS.

* *

NOTE: The cold leg flow path is preferred for RCS feed and bleed. The hot leg should be used if the cold leg is NOT available and the PRZR can be filled.

1. ___ Determine which LHSI Pump is to be started. IF LHSI Pump NOT available, THEN GO TO Step 15.

   ___ 1-SI-P-1A ___ 1-SI-P-1B

2. ___ Verify open or open LHSI PUMP SUCTION FROM RWST MOV for LHSI Pump to be started:

   ___ 1-SI-MOV-1862A or ___ 1-SI-MOV-1862B

3. ___ Verify open or open LHSI RECIRC PUMP MOVs for LHSI Pump to be started:

   ___ 1-SI-MOV-1885A and 1-SI-MOV-1885D

   OR

   ___ 1-SI-MOV-1885B and 1-SI-MOV-1885C

4. ___ Start LHSI Pump determined in Step 1.

5. ___ Establish RCS bleed path IAW the following:

   ___ a. IF PRZR Safety Valve previously removed, THEN GO TO Step 6.

   ___ b. IF time since shutdown is greater than 14 hours and less than 113 hours, THEN open two PRZR PORVs and the associated Block MOVs.

   ___ c. IF time since shutdown is greater than or equal to 113 hours, THEN open one PRZR PORV and the associated Block MOV.

6. ___ IF cold leg injection to be used, THEN perform Steps 7 through 11. IF hot leg injection to be used, THEN GO TO Step 12.

7. ___ Verify energized or locally close breaker for 1-SI-MOV-1890C, LHSI TO COLD LEGS. (1H1-2N 9A)

8. ___ Open 1-SI-MOV-1890C, LHSI TO COLD LEGS.

9. ___ Throttle SI flow to RCS IAW Attachment 7 using LHSI PUMP TO COLD LEGS. IF RCS temperatures decrease, THEN throttle flow to maintain stable temperature.

   ___ 1-SI-MOV-1864A or ___ 1-SI-MOV-1864B

10. ___ IF RCS temperatures can NOT be maintained less than 200°F, THEN do either of the following:

    ☐ • Increase SI flowrate.

    ☐ • Swap to hot leg injection.

11. ___ GO TO Step 13.

12. ___ Align for hot leg injection IAW the following:

    ___ a. Throttle SI flow to RCS IAW Attachment 7 using LHSI TO HOT LEGS for running LHSI Pump:

    ___ 1-SI-MOV-1890A (Key 47) or ___ 1-SI-MOV-1890B (Key 48)

    ___ b. IF hot leg injection NOT controlling RCS temperature as indicated by increasing PRZR liquid and vapor space temperatures or by decreasing subcooling, THEN do either of the following:

    ☐ • Increase SI flowrate.

    ☐ • Swap to cold leg injection.

13. ___ IF RWST level decreases to 20% due to RCS feed and bleed, THEN GO TO Step 28.

14. ___ WHEN RHR System available, THEN RETURN TO procedure Step 23.

15. Align CHG Pump suction to the RWST:

___ a. Open CHG PUMP SUCT FROM RWST MOVs:

☐ • 1-CH-MOV-1115B

☐ • 1-CH-MOV-1115D

___ b. Close CHG PUMP SUCTION FROM VCT MOVs:

☐ • 1-CH-MOV-1115C

☐ • 1-CH-MOV-1115E

16. Determine which CHG Pump is to be started:

___ 1-CH-P-1A ___ 1-CH-P-1B ___ 1-CH-P-1C

17. ___ Verify open or open the following MOVs for the CHG Pump selected in Step 16:

1-CH-P-1A	1-CH-P-1B	1-CH-P-1C
___ 1-CH-MOV-1267A	___ 1-CH-MOV-1269A	___ 1-CH-MOV-1270A
___ 1-CH-MOV-1267B	___ 1-CH-MOV-1269B	___ 1-CH-MOV-1270B
___ 1-CH-MOV-1275A	___ 1-CH-MOV-1275B	___ 1-CH-MOV-1275C
___ 1-CH-MOV-1286A	___ 1-CH-MOV-1286B	___ 1-CH-MOV-1286C
___ 1-CH-MOV-1287A	___ 1-CH-MOV-1287B	___ 1-CH-MOV-1287C
___ 1-CH-MOV-1373	___ 1-CH-MOV-1373	___ 1-CH-MOV-1373

18. ___ Verify running or start one CHG Pump.

19. Establish RCS bleed path IAW the following:

___ a. Determine the required minimum SI flow for decay heat removal from Attachment 7.

_____ gpm

___ b. IF PRZR Safety Valve previously removed, THEN GO TO Step 20.

___ c. IF time since shutdown is greater than 112 hours and less than 120 hours, THEN open two PRZR PORVs and the associated Block MOVs.

___ d. IF time since shutdown is greater than or equal to 120 hours, THEN open one PRZR PORV and the associated Block MOV.

NOTE: The cold leg flow path is preferred for RCS feed and bleed.

20. ___ IF cold leg injection to be used, THEN perform Steps 21 through 24. IF hot leg injection to be used, THEN GO TO Step 25.

21. ___ Send an Operator to the Auxiliary Building basement.

22. ___ Using one of the following MOVs, establish greater than the minimum SI flow for decay heat removal as determined in Step 19a by directing local throttling of SI flow by opening the MOV's breaker and throttling the selected MOV IAW Attachment 7. IF RCS temperatures decrease, THEN throttle flow to maintain stable temperature.

___ 1-SI-MOV-1867C, HHSI TO COLD LEGS (1H1-1 2C)

___ 1-SI-MOV-1867D, HHSI TO COLD LEGS (1J1-1 8C)

___ 1-SI-MOV-1842, ALT HHSI TO COLD LEGS (1H1-2N 4B)

23. ___ IF RCS temperatures can NOT be maintained less than 200°F, THEN do either of the following:

- ☐ Increase SI flowrate.
- ☐ Swap to hot leg injection.

24. ___ GO TO Step 26.

25. ___ Align for hot leg injection IAW the following:

___ a. Send an Operator to the Auxiliary Building basement.

___ b. Establish greater than the minimum SI flow for decay heat removal as determined in Step 19a by directing local throttling of SI flow by opening the breaker for the selected MOV and throttling the selected MOV:

___ 1-SI-MOV-1869A, HHSI TO HOT LEGS (1H1-1 3C)

___ 1-SI-MOV-1869B, HHSI TO HOT LEGS (1J1-1 9A)

___ c. IF hot leg injection NOT controlling RCS temperature as indicated by increasing PRZR liquid and vapor space temperatures or by decreasing subcooling, THEN do either of the following:

☐ • Increase SI flowrate.

☐ • Swap to cold leg injection.

26. ___ IF RWST level decreases to 20% due to RCS feed and bleed, THEN GO TO Step 28.

27. ___ WHEN RHR System available, THEN RETURN TO procedure Step 23.

* *

CAUTION:
- The SI system must not be aligned to the CTMT sump since adequate water level will not be available.
- If suction source is lost to any SI pump, the pump should be stopped.
- Long-term loss of RHR may require manual alignment of one RS HX.
- TSC should be consulted to determine preferred course of action.

* *

28. ___ Verify or place the RMT key switches in the REFUEL position.

29. ___ IF RWST inventory can NOT support continued RCS feed and bleed, THEN align CHG pump suction crosstie from Unit 2 IAW the following:

NOTE: An LCO clock may be entered on Unit 2 if the RWST is crosstied.

1. ___ Verify open or open CHG PUMP SUCT FROM RWST MOVs:
   - ☐ • 1-CH-MOV-1115B
   - ☐ • 1-CH-MOV-1115D

2. ___ Close CHG PUMP SUCTION FROM VCT MOVs:
   - ☐ • 1-CH-MOV-1115C
   - ☐ • 1-CH-MOV-1115E

3. ___ Open RWST CROSSTIE valves:
   - ☐ • 1-SI-TV-102A
   - ☐ • 1-SI-TV-102B

4. ___ Direct Unit 2 Operator to open RWST CROSSTIE valves:
   - ☐ • 2-SI-TV-202A
   - ☐ • 2-SI-TV-202B

5. ___ Start makeup to Unit 2 RWST.

6. ___ WHEN RHR System available, THEN do the following:

   ___ a. Close the RWST CROSSTIE valves on Unit 1 and Unit 2.

   ___ b. Establish charging and letdown to maintain stable PRZR level and pressure.

   ___ c. RETURN TO Procedure Step 23.

NUMBER 1-AP-27.00	ATTACHMENT TITLE MINIMUM SI FLOW REQUIRED FOR DECAY HEAT REMOVAL	ATTACHMENT 7
REVISION 20		PAGE 1 of 1

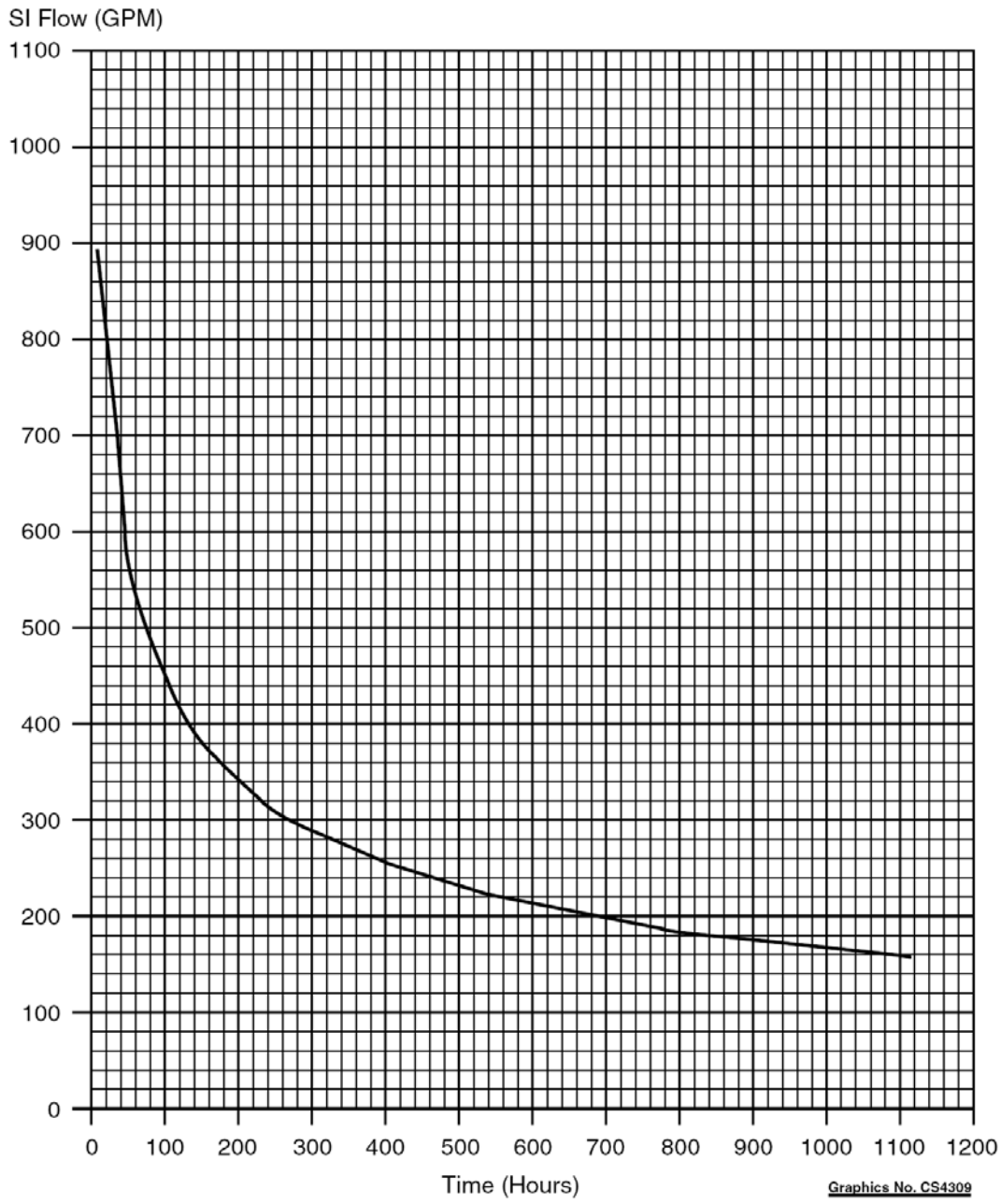

* *

CAUTION:
- A PRZR Safety Valve must be removed for gravity feed cooling to be effective.
- With an initially full RWST aligned to a LHSI Cold leg flowpath, gravity feed will suppress boiling for one hour if time after shutdown is greater than 110 hours and less than 325 hours.
- With an initially full RWST aligned to a LHSI Cold leg flowpath, gravity feed will suppress boiling for three hours if time after shutdown is greater than 325 hours.

* *

NOTE:
- In order of priority, the flowpaths for aligning gravity feed are as follows:
  - •LHSI to Cold legs
  - •LHSI to Hot legs
  - •CHG Pump to Cold legs
  - •CHG Pump to Hot legs
- Attachment 9 may be used to determine the required RWST level to suppress boiling for one hour, based on time from shutdown.

1. ___ IF CHG Pump crosstie from Unit 2 desired for RCS feed, THEN GO TO Step 13. IF gravity feed desired, THEN continue in this Attachment.

2. ___ IF LHSI Pump flowpath to Cold leg to be used, THEN do the following. IF LHSI Pump flowpath to Hot leg to be used, THEN GO TO Step 3. IF CHG Pump to be used, THEN GO TO Step 4.

___ a. Open LHSI PUMP SUCTION FROM RWST MOV:

☐ • 1-SI-MOV-1862A or 1-SI-MOV-1862B

___ b. Open LHSI TO COLD LEGS MOV:

☐ • 1-SI-MOV-1890C

___ c. Throttle SI flow to RCS IAW Attachment 7 using LHSI PUMP TO COLD LEGS MOV. IF RCS temperatures decrease, THEN throttle flow to maintain stable temperature.

☐ • 1-SI-MOV-1864A or 1-SI-MOV-1864B

___ d. IF RCS temperatures can NOT be maintained less than 200°F, THEN do either of the following:

☐ • Swap to hot leg injection.

☐ • Increase SI flowrate.

___ e. WHEN RHR system available, THEN RETURN TO procedure Step 23.

3. ___ IF LHSI Pump flowpath to Hot leg to be used, THEN do the following:

___ a. Open LHSI PUMP SUCTION FROM RWST MOV:

☐ • 1-SI-MOV-1862A or 1-SI-MOV-1862B

___ b. Throttle LHSI TO HOT LEGS MOV IAW Attachment 7:

☐ • 1-SI-MOV-1890A or 1-SI-MOV-1890B

___ c. IF hot leg injection NOT controlling RCS temperature as indicated by increasing PRZR liquid and vapor space temperatures OR by decreasing subcooling, THEN do either of the following:

☐ • Swap to cold leg injection.

☐ • Increase SI flowrate.

___ d. WHEN RHR system available, THEN RETURN TO procedure Step 23.

4. Align CHG Pump suction to the RWST:

___ a. Open CHG PUMP SUCT FROM RWST MOVs:

☐ • 1-CH-MOV-1115B

☐ • 1-CH-MOV-1115D

___ b. Close CHG PUMP SUCTION FROM VCT MOVs:

☐ • 1-CH-MOV-1115C

☐ • 1-CH-MOV-1115E

5. ___ Determine which CHG Pump to be used:

___ 1-CH-P-1A ___ 1-CH-P-1B ___ 1-CH-P-1C

6. ___ Verify open or open the following MOVs for the CHG Pump selected in Step 5:

1-CH-P-1A	1-CH-P-1B	1-CH-P-1C
___ 1-CH-MOV-1267A	___ 1-CH-MOV-1269A	___ 1-CH-MOV-1270A
___ 1-CH-MOV-1267B	___ 1-CH-MOV-1269B	___ 1-CH-MOV-1270B
___ 1-CH-MOV-1275A	___ 1-CH-MOV-1275B	___ 1-CH-MOV-1275C
___ 1-CH-MOV-1286A	___ 1-CH-MOV-1286B	___ 1-CH-MOV-1286C
___ 1-CH-MOV-1287A	___ 1-CH-MOV-1287B	___ 1-CH-MOV-1287C
___ 1-CH-MOV-1373	___ 1-CH-MOV-1373	___ 1-CH-MOV-1373

7. ___ IF Cold leg flowpath to be used, THEN direct local throttling of flow to maintain RCS temperatures less than 200°F by opening the MOV's breaker and throttling the selected MOV. IF Hot leg flowpath to be used, THEN GO TO Step 10.

___ 1-SI-MOV-1867C, HHSI TO COLD LEGS (1H1-1 2C)

___ 1-SI-MOV-1867D, HHSI TO COLD LEGS (1J1-1 8C)

___ 1-SI-MOV-1842, ALT HHSI TO COLD LEGS (1H1-2N 4B)

8. ___ IF RCS temperatures can NOT be maintained less than 200°F, THEN do either of the following:

☐ • Swap to hot leg injection IAW Step 10.

☐ • Increase SI flowrate.

9. ___ GO TO Step 12.

10. ___ Using Attachment 7, direct local throttling of SI flow by opening the breaker for the selected MOV and throttling the selected MOV:

☐ • 1-SI-MOV-1869A (1H1-1 3C) or 1-SI-MOV-1869B (1J1-1 9A)

11. ___ IF hot leg injection NOT controlling RCS temperature as indicated by increasing PRZR liquid and vapor space temperatures or decreasing subcooling, THEN do either of the following:

☐ • Swap to cold leg injection.

☐ • Increase SI flowrate.

12. ___ WHEN RHR system available, THEN RETURN TO procedure Step 23.

NOTE: An LCO clock may be entered on Unit 2 if Charging system is crosstied.

13. ___ Isolate charging line IAW either of the following:

    ___ a. Locally close 1-CH-304, Charging Line Isolation.

    ___ b. Close 1-CH-FCV-1122, CHG FLOW CNTRL.

14. ___ Verify HHSI to cold leg MOVs closed:

☐ • 1-SI-MOV-1867C

☐ • 1-SI-MOV-1867D

15. ___ Verify CHG line isolation MOVs open:

☐ • 1-CH-MOV-1289A

☐ • 1-CH-MOV-1289B

16. ___ Verify Unit 1 CHG pump C discharge MOVs open:

☐ • 1-CH-MOV-1286C

☐ • 1-CH-MOV-1287C

17. ___ Verify Unit 2 CHG Pump C discharge MOVs open:

☐ • 2-CH-MOV-2286C

☐ • 2-CH-MOV-2287C

18. ___ Verify Unit 2 CHG Pump(s) suction aligned to the RWST.

19. ___ Locally open 2-CH-447.

20. ___ Locally vent crosstie piping by operating 1-CH-732.

21. ___ Locally open 1-CH-728.

22. ___ Commence makeup to Unit 2 RWST.

23. ___ GO TO Step 19 of Attachment 6.

NUMBER 1-AP-27.00	ATTACHMENT TITLE REQUIRED RWST LEVEL TO SUPPRESS BOILING FOR ONE HOUR USING GRAVITY FEED	ATTACHMENT 9
REVISION 20		PAGE 1 of 1

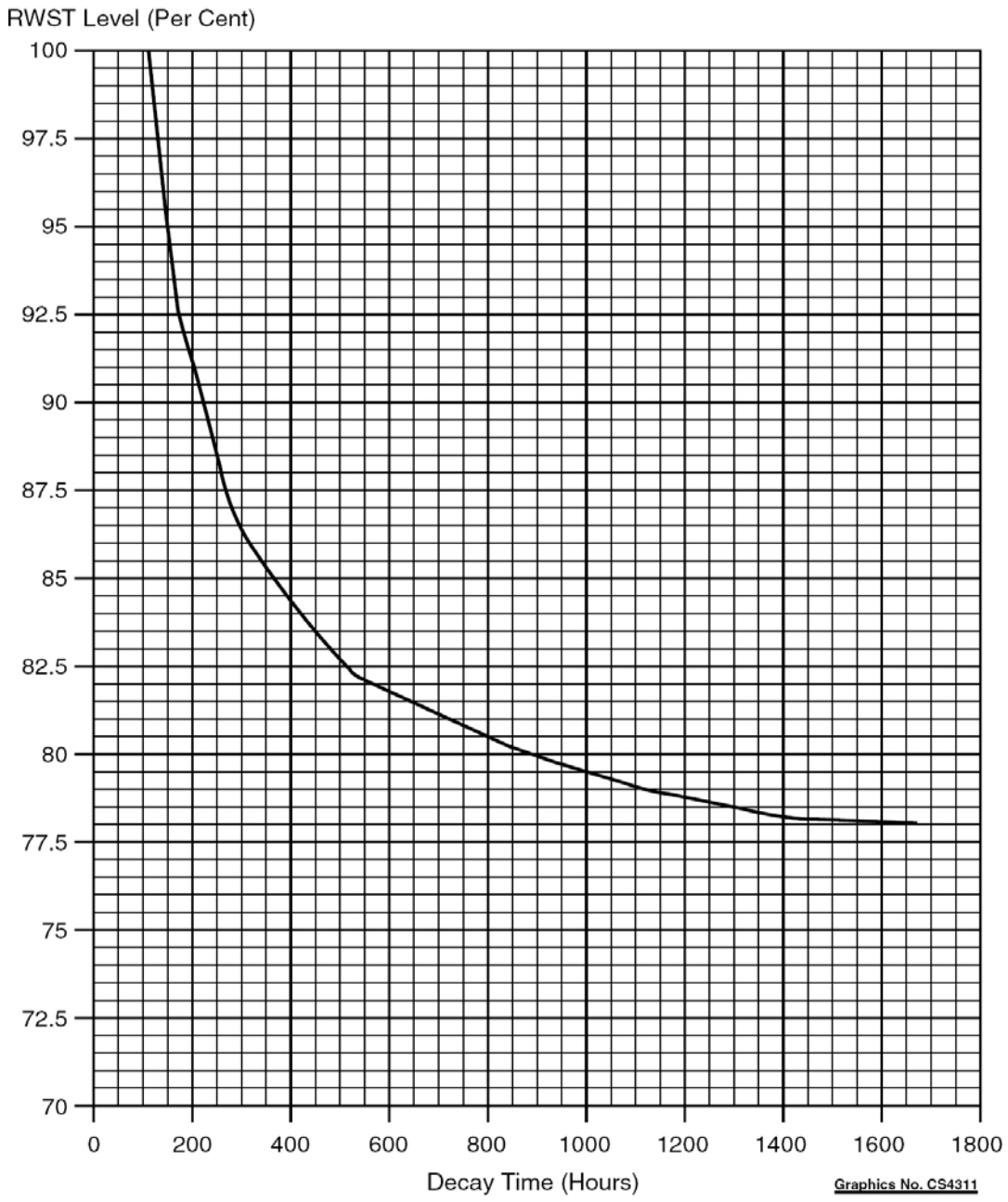

* *

CAUTION:
- This mode of heat removal can NOT be used when large RCS openings exist, the RX head is on, or RX cavity level does NOT exist or can NOT be established.
- Overexposure of plant personnel due to degraded RCS conditions should be considered before this lineup is performed. This lineup should not be attempted with actual or suspected fuel damage.

* *

1. ___ Verify full or fill the RX cavity IAW 1-OP-SI-003, FILLING THE REACTOR CAVITY.

2. ___ Open the Fuel Transfer Tube gate valve.

3. ___ Verify in service or place in service one SFP Cooling Pump.

4. ___ Stop RWST Recirc Pump, 1-CS-P-2A or 1-CS-P-2B.

5. ___ Locally stop any running SFP Purification Pump.
   - 1-FC-P-3A or 1-FC-P-3B

6. ___ Locally perform the following valve line-up:

   ___ a. Open SFP Purification Pump suction for pump to be run:

      ___ 1-FC-44, 1-FC-P-3A

      ___ 1-FC-43, 1-FC-P-3B

   ___ b. Open SFP Purification Pump discharge for pump to be run:

      ___ 1-FC-46, 1-FC-P-3A

      ___ 1-FC-49, 1-FC-P-3B

   ___ c. Open 1-FC-72, Purification Pump header isolation.

   ___ d. Close 1-FC-29, Fuel Pit IX Bypass.

   ___ e. Close 1-FC-16, Fuel Pit IX inlet.

   ___ f. Close 2-FC-73, Unit 2 RWST discharge to SFP.

   ___ g. Open 1-FC-73, Unit 1 RWST discharge to SFP.

   ___ h. Open 1-FC-74, Unit 1 RWST discharge to SFP.

7. ___ Locally perform valve line-up for RWST refrigeration units.

   a. 1-CS-MR-1A

      ___ 1. Open 1-CS-37, 1-CS-MR-1A inlet.

      ___ 2. Open 1-CS-40, 1-CS-MR-1A outlet.

   b. 1-CS-MR-1B

      ___ 1. Open 1-CS-41, 1-CS-MR-1B inlet.

      ___ 2. Open 1-CS-44, 1-CS-MR-1B outlet.

8. ___ Close 1-CS-46, 1-CD-E-2A outlet.

9. ___ Close 1-CS-47, 1-CD-E-2B outlet.

10. IF RWST coolers (Chilled Water required) to be placed in service, THEN locally perform the following valve line-up.

    a. 1-CD-E-2A

       ___ 1. Open 1-CS-35, 1-CD-E-2A inlet.

       ___ 2. Open 1-CS-46, 1-CD-E-2A outlet.

    b. 1-CD-E-2B

       ___ 1. Open 1-CS-36, 1-CD-E-2B inlet.

       ___ 2. Open 1-CS-47, 1-CD-E-2B outlet.

11. ___ Open 1-CS-48, RWST cooler discharge to RWST.

12. ___ Locally start the SFP Purification Pump aligned in Step 6.

13. ___ Monitor RWST level for increase. As RWST level increases, align any available LHSI pump flowpath to provide cavity makeup.

14. ___ Maintain RCS heat removal. WHEN RHR restored, THEN RETURN TO procedure Step 23.

1. PROBABLE CAUSES:

   a. Loss of RCS inventory

   b. Valve mis-positioned

   c. Loss of both RHR pumps

   d. Loss of CC while on RHR

2. REFERENCES:

   a. Generic Letter 88-17, Loss of Decay Heat Removal

   b. UFSAR Section 9.3

   c. 11448-FM-81A, 84A, 86A, 87A

   d. Tech Spec 3.5

   e. Background Information for WOG ARG-1, LOSS OF RHR WHILE OPERATING AT MID-LOOP CONDITIONS

   f. CTS 189, Entire procedure

   g. CTS 832, Step 1 eighth bullet

   h. CTS 982, Step 29 and Attachment 6

   i. CTS 1984, Step 2e

   j. NE Technical Report 865, Rev. 3, Background and Guidance for Ensuring Adequate Backup Decay Heat Removal Following Loss of RHR, Attachments 4, 5, 6 and 9

   k. NSA-93005, SPS, RHR OPERATION AT MID-LOOP IMPACT OF UPDATED INSTRUMENT ERRORS, Attachment 1

   l. 1-OSP-CT-214, CONTAINMENT CLOSURE FOR REDUCED OR POTENTIALLY REDUCED INVENTORY CONDITIONS

   m. 0-AP-40.00, NON-RECOVERABLE LOSS OF INSTRUMENT AIR

   n. 1-OP-SI-003, FILLING THE REACTOR CAVITY

   o. 1-AP-16.01, SHUTDOWN LOCA

   p. CTS 2746 (Steps 16 and 24)

   q. CTS 2743 (DCP 94-030-3, Core Uprate)

   r. TSCR 313, Amendment 207

   s. DCP 04-033, Setpoint change from 16% to 20%

20. ET NAF 06-0088, Justification For Not Having a LHSI Flowpath From The Containment Sump At CSD.

21. SAA000911, Shutdown Cooling Defense In Depth Assessment

22. ET-NAF-08-0062, Hot Leg Versus Cold Leg Injection for Loss of Residual Heat Removal

U.S. Nuclear Regulatory Commission
Surry Power Station

SR10301
Simulator Job Performance Measure EPEE05.EA1.1 (4.1/4.0)
Alternate

Applicant_____ Start Time_____

Examiner_____

Date _____ Stop Time_____

Title

ESTABLISH FEED FLOW FROM THE CONDENSATE SYSTEM IN RESPONSE TO A LOSS OF SECONDARY HEAT SINK.

K/A: EPEE05.EA1.1 Ability to operate and/or monitor the following as they apply to the (Loss of Secondary Heat Sink): Components, and functions of control and safety systems, including instrumentation, signals, interlocks, failure modes, and automatic and manual features.

Applicability	Estimated Time	Actual Time
RO/SRO(I)	20 minutes	

Conditions

- Task is to be PERFORMED in the simulator.
- Plant is shutdown following a trip.
- 1-FR-H.1, RESPONSE TO LOSS OF SECONDARY HEAT SINK, is in effect at step 8.

Standards

- Establishes feed flow from the main condensate system IAW 1-FR-H.1, RESPONSE TO LOSS OF SECONDARY HEAT SINK, step 8.

Initiating Cues

- 1-FR-H.1, RESPONSE TO LOSS OF SECONDARY HEAT SINK, step 8.
- Shift Manager direction.

Terminating Cues

- 1-FR-H.1, RESPONSE TO LOSS OF SECONDARY HEAT SINK, step 8 completed.

Procedures

- 1-FR-H.1, RESPONSE TO LOSS OF SECONDARY HEAT SINK.

Tools and Equipment

- None

Safety Considerations

- None

Simulator Setup

- Recall saved IC-328 OR
- Call up 100% IC and initialize.
- Enter the following malfunctions: FW0701 (1-FW-P-3A Overcurrent Trip), FW0702 (1-FW-P-3B Overcurrent Trip), and MS16 (1-FW-P-2 Trip Throttle Valve Failed Close) with a 0 second time delay, FW1701 (1-FW-P-1A Impeller Degradation) and FW1702 (1-FW-P-1B Impeller Degradation) with a 2 second time delay 100% degradation.
- Place the simulator in run and implement the malfunctions, immediately trip to conserve SG level.
- Depressurize the RCS to 1950# while cooling the plant to <540°F, block Low Pressure and High Steam Flow SI signals, Trip the RCPs, ensure RCS temp and pressure are stable below the SI block setpoints. Go to Bypass Interlock on the steam dumps.
- SG levels should be about 30-50% WR when the setup is completed. If needed, delete a MFW pump degradation malfunction and feed the SGs. After feeding stop the MFP and re-insert the deleted MFW pump degradation.
- Set up the following triggers:
    - Trigger #5 – Places 'A' MFP motor breakers in test (use remote functions FWP1A1_TEST and FWP1A2_TEST and set the final value to IN TEST)
    - Trigger #7 – Places 'B' MFP motor breakers in test (use remote functions FWP1B1_TEST and FWP1B2_TEST and set the final value to IN TEST)
- Place the simulator in freeze. Save conditions if necessary.
- Insert the following malfunctions to fail the steam dumps: MSPC464B_RAISE to OFF, MSPC464B_LOWER to OFF, MSPC464B_MANUAL to ON.
- Make sure RCS pressure is low enough that SI will not unblock before the cooldown (depressurization of 1 SG) begine.

Initiating Cues

- 1-FR-H.1, RESPONSE TO LOSS OF SECONDARY HEAT SINK, step 8.
- Shift Manager direction.

Directions to the Applicant

- You are the Unit RO and I am the Shift Manager. There is a loss of secondary heat sink in progress on Unit 1.
- Unit conditions are as follows, Unit 1 tripped due to mechanical damage to both main feed pumps, none of the aux feed pumps are working on Unit 1 and crosstie attempts from unit 2 have proven unsuccessful.
- 1-FR-H.1, RESPONSE TO LOSS OF SECONDARY HEAT SINK, has been completed to step 8. RCPs are secured, low pressure and hi steam flow SI signals have been blocked.
- Here is a copy of FR-H.1 Step 8, I need you to ESTABLISH FEED FLOW FROM THE CONDENSATE SYSTEM IN RESPONSE TO A LOSS OF SECONDARY HEAT SINK in accordance with step 8.
- When you finish the actions necessary to accomplish this, please inform me.

Notes

PERFORMANCE CHECKLIST

Notes to the Evaluator

- Task critical elements are bolded and noted at the end of the step as CRITIAL STEP.
- *An additional instructor may be needed to silence and acknowledge alarms for the examinee.*
- **START TIME:**

STEP 1: ***NOTE PRIOR TO STEP 8*** **NOTE:** Flow on each Main Steamline should be kept less than 1.0 x 10^6 PPH to prevent Main Steamline isolation during RCS cooldown with the Steam Dumps. **STANDARD:** • Acknowledges note. **COMMENTS:**	_____ **SAT** _____ **UNSAT**
STEP 2: ***STEP 8a*** - TRY TO ESTABLISH FEED FLOW FROM CONDENSATE SYSTEM BY DEPRESSURIZING ONE INTACT SG: a) Select one intact SG to depressurize **STANDARD:** • Selects one SG to depressurize (A, B, or C) **EVALUATOR'S NOTE: If asked, there is no preferred SG.** **COMMENTS:**	_____ **SAT** _____ **UNSAT**

STEP 3: ***Step 8b –*** TRY TO ESTABLISH FEED FLOW FROM CONDENSATE SYSTEM BY DEPRESSURIZING ONE INTACT SG: b) Close MSTVs on the non-selected SGs **STANDARD:** • Closes MSTVs on the 2 non-selected SGs by taking control switch to close and verifying green light on and red light off. **EVALUATOR'S NOTE: N/A** **COMMENTS:**	_____ **SAT** _____ **UNSAT**
STEP 4: ***Step 8c -*** TRY TO ESTABLISH FEED FLOW FROM CONDENSATE SYSTEM BY DEPRESSURIZING ONE INTACT SG: c) Align CHG pump suction to the RWST: 1) Verify open or open CHG pump suction from RWST MOVs • 1-CH-MOV-1115B • 1-CH-MOV-1115D 2) Verify closed or close CHG pump suction from VCT MOVs • 1-CH-MOV-1115C • 1-CH-MOV-1115E **STANDARD:** • Opens 1-CH-MOV-1115B and 1-CH-MOV-1115D by taking control switch to open and verifying red light on and green light off. • Closes 1-CH-MOV-1115C and 1-CH-MOV-1115E by taking control switch to close and verifying green light on and red light off. **EVALUATOR'S NOTE: N/A** **COMMENTS:**	_____ **SAT** _____ **UNSAT**

STEP 5: ***Step 8d -*** TRY TO ESTABLISH FEED FLOW FROM CONDENSATE SYSTEM BY DEPRESSURIZING ONE INTACT SG: d) Verify closed or close letdown isolation valves • 1-CH-LCV-1460A • 1-CH-LCV-1460B **STANDARD:** • Closes 1-CH-LCV-1460A and 1-CH-LCV-1460B by taking control swich to close and verifying green light on and red light off. • Verifies letdown flow goes to zero. **EVALUATOR'S NOTE: N/A** **COMMENTS:**	_____ **SAT** _____ **UNSAT**
STEP 6: ***Step 8e -*** TRY TO ESTABLISH FEED FLOW FROM CONDENSATE SYSTEM BY DEPRESSURIZING ONE INTACT SG: e) Control charging flow to maintain PRZR level **STANDARD:** • Verifies 1-CH-FCV-1122 is controlling in automatic or places in manual to control pressurizer level. **EVALUATOR'S NOTE: N/A** **COMMENTS:**	_____ **SAT** _____ **UNSAT**
STEP 7: ***Step 8f –*** TRY TO ESTABLISH FEED FLOW FROM CONDENSATE SYSTEM BY DEPRESSURIZING ONE INTACT SG: f) Dump steam to condenser at maximum rate to depressurize one intact SG to less than 550 psig. **STANDARD:** • Attempts to use steam dumps to depressurize selected intact SG. • Notes that the steam dumps are not functioning and goes to RNO.	_____ **SAT** _____ **UNSAT**

EVALUATOR'S NOTE: N/A **COMMENTS:**	
STEP 8: ***Step 8f RNO–*** TRY TO ESTABLISH FEED FLOW FROM CONDENSATE SYSTEM BY DEPRESSURIZING ONE INTACT SG: f) Dump steam from intact SG: • Manually use SG PORV. OR • Locally use SG PORV IAW Attachment 6. IF at least one SG can NOT be depressurized, THEN GO TO Step 10. **STANDARD:** • Selects intact SG PORV and depressurizes selected intact SG to less than 550 psig by either placing SG PORV in manual and opening it OR lowering setpoint for SG PORV. • Does not go to step 10, goes to step 8g. **EVALUATOR'S NOTE: N/A** **COMMENTS:**	_____ **SAT** _____ **UNSAT**
STEP 9: ***Step 8g –*** TRY TO ESTABLISH FEED FLOW FROM CONDENSATE SYSTEM BY DEPRESSURIZING ONE INTACT SG: g) Establish condensate flow: 1) Locally put one set of feed pump breakers in test 2) Close feed pump breakers in test 3) Open appropriate feed pump discharge MOV 4) Control flow with SG FW bypass flow valve(s) or feed REG valve(s) as necessary 5) Depressurize SG as necessary to establish adequate Delta-P for feeding	_____ **SAT** _____ **UNSAT**

STANDARD: • **Directs operator to close either 'A' or 'B' MFP breakers in test.** • **Once MFP breakers are reported to be closed in test, takes the control switches to close for the selected MFPs.** • **Opens appropriate discharge MOV (1-FW-MOV-150A or 1-FW-MOV-150B).** • **Controls FW flow to selected SG using the FW bypass flow valve for that selected SG.** • **Operator may continue to depressurize SG using SG PORV.** • **Verifies positive indication of SG level increase for selected SG.** • **All the above are Critical Tasks.** **EVALUATOR'S NOTE: N/A** **COMMENTS:**	
STEP 11: REPORT TO SHIFT SUPERVISOR (EVALUATOR). **STANDARD:** Verbal status report that feed flow has been established to at least one intact SG. **EVALUATOR'S NOTE: N/A** **COMMENTS:**	_____ **SAT** _____ **UNSAT**

STOP TIME:

_____

_____

_____

_____

_____

_____

Operator Directions Handout
(TO BE READ TO APPLICANT BY EXAMINER)

Task

- Task is to be performed in the simulator.

- Establish feed flow from the main condensate system IAW 1-FR-H.1, RESPONSE TO LOSS OF SECONDARY HEAT SINK, step 8.

Directions

The evaluator will explain the initial conditions of the task to be performed and will provide the initiating cue. Ensure you indicate to the evaluator when you understand your assigned task

Initial Conditions

- Unit 1 tripped due to mechanical damage to both main feed pumps, none of the aux feed pumps are working on Unit 1 and crosstie attempts from unit 2 have proven unsuccessful.
- 1-FR-H.1, RESPONSE TO LOSS OF SECONDARY HEAT SINK, has been completed to step 8. RCPs are secured, low pressure and hi steam flow SI signals have been blocked.

Initiating Cues

- You are the Unit RO and I am the Shift Manager. There is a loss of secondary heat sink in progress on Unit 1.
- Unit conditions are as follows, Unit 1 tripped due to mechanical damage to both main feed pumps, none of the aux feed pumps are working on Unit 1 and crosstie attempts from unit 2 have proven unsuccessful.
- 1-FR-H.1, RESPONSE TO LOSS OF SECONDARY HEAT SINK, has been completed to step 8. RCPs are secured, low pressure and hi steam flow SI signals have been blocked.
- Here is a copy of FR-H.1 Step 8, I need you to ESTABLISH FEED FLOW FROM THE CONDENSATE SYSTEM IN RESPONSE TO A LOSS OF SECONDARY HEAT SINK in accordance with step 8.
- When you finish the actions necessary to accomplish this, please inform me.

Operator Directions Handout
(TO BE GIVEN TO APPLICANT)

Initial Conditions

- Unit 1 tripped due to mechanical damage to both main feed pumps, none of the aux feed pumps are working on Unit 1 and crosstie attempts from unit 2 have proven unsuccessful.
- 1-FR-H.1, RESPONSE TO LOSS OF SECONDARY HEAT SINK, has been completed to step 8. RCPs are secured, low pressure and hi steam flow SI signals have been blocked.

Initiating Cues

- You are the Unit RO and I am the Shift Manager. There is a loss of secondary heat sink in progress on Unit 1.
- Unit conditions are as follows, Unit 1 tripped due to mechanical damage to both main feed pumps, none of the aux feed pumps are working on Unit 1 and crosstie attempts from unit 2 have proven unsuccessful.
- 1-FR-H.1, RESPONSE TO LOSS OF SECONDARY HEAT SINK, has been completed to step 8. RCPs are secured, low pressure and hi steam flow SI signals have been blocked.
- Here is a copy of FR-H.1 Step 8, I need you to ESTABLISH FEED FLOW FROM THE CONDENSATE SYSTEM IN RESPONSE TO A LOSS OF SECONDARY HEAT SINK in accordance with step 8.
- When you finish the actions necessary to accomplish this, please inform me.

STEP	ACTION/EXPECTED RESPONSE	RESPONSE NOT OBTAINED

NOTE: Flow on each Main Steamline should be kept less than 1.0 x 10^6 PPH to prevent Main Steamline isolation during RCS cooldown with the Steam Dumps.

8. ___ TRY TO ESTABLISH FEED FLOW FROM CONDENSATE SYSTEM BY DEPRESSURIZING ONE INTACT SG:

☐ a) Select one intact SG to depressurize

☐ b) Close MSTVs on the non-selected SGs

c) Align CHG pump suction to the RWST:

1) Verify open or open CHG pump suction from RWST MOVs

☐ • 1-CH-MOV-1115B
☐ • 1-CH-MOV-1115D

2) Verify closed or close CHG pump suction from VCT MOVs

☐ • 1-CH-MOV-1115C
☐ • 1-CH-MOV-1115E

d) Verify closed or close letdown isolation valves

☐ • 1-CH-LCV-1460A
☐ • 1-CH-LCV-1460B

☐ e) Control charging flow to maintain PRZR level

(STEP 8 CONTINUED ON NEXT PAGE)

STEP	ACTION/EXPECTED RESPONSE	RESPONSE NOT OBTAINED
8.	TRY TO ESTABLISH FEED FLOW FROM CONDENSATE SYSTEM BY DEPRESSURIZING ONE INTACT SG: (Continued)	
	☐ f) Dump steam to condenser at maximum rate to depressurize one intact SG to less than 550 psig	f) Dump steam from intact SG: ☐ • Manually use SG PORV. OR ☐ • Locally use SG PORV IAW Attachment 6. ☐ IF at least one SG can NOT be depressurized, THEN GO TO Step 10.
	g) Establish condensate flow:	☐ g) GO TO Step 10.
	☐ 1) Locally put one set of feed pump breakers in test	
	☐ 2) Close feed pump breakers in test	
	☐ 3) Open appropriate feed pump discharge MOV	
	☐ 4) Control flow with SG FW bypass flow valve(s) or feed REG valve(s) as necessary	
	☐ 5) Depressurize SG as necessary to establish adequate ΔP for feeding	
9. ___	CHECK SG LEVELS:	
	☐ a) Check narrow range level in at least one SG - GREATER THAN 12% [18%]	☐ a) IF feed flow to at least one SG verified, THEN maintain flow to restore narrow range level to greater than 12% [18%]. IF flow NOT verified, THEN GO TO Step 10.
	☐ b) RETURN TO procedure and step in effect	

U.S. Nuclear Regulatory Commission
Surry Power Station

SR10301
Simulator Job Performance Measure 026.A4.01 (4.5/4.3)
Alternate Path

Applicant_____ Start Time_____

Examiner_____

Date _____ Stop Time_____

Title

RESPOND TO A SPURIOUS CS ACTUATION.

K/A: 026.A4. 01 Ability to manually operate and/or monitor in the control room: CSS Controls.

Applicability	**Estimated Time**	**Actual Time**
RO/SRO(I)	12 minutes	

Conditions

- Task is to be PERFORMED in the simulator.
- Spurious CS actuation has occurred at HSD.

Standards

- Applicant recognizes spurious Hi Hi CLS signal.
- Applicant secures 1-CS-P-1A, closes discharge MOVs 1-CS-MOV-101A, B from MCR.
- Applicant directs actions to secure 1-CS-P-1B, close discharge MOVs 1-CS-MOV-101C, D from field / MCR.

Initiating Cues

- 1B-A6/B6, CTMT PART PRESS -0.1 PSI CH 1 / 2 remain locked in.
- Shift Manager direction.

Terminating Cues

- 1B-A6 Attachment 1, steps 1-6 complete.

Procedures

- 1B-A6, CTMT PART PRESS -0.1 PSI CH 1.

Tools and Equipment

- None

Safety Considerations

- None

Simulator Setup

- Recall IC-326 OR
- Call up HSD IC and initialize.
- Start 1-CS-P-1A/1B, freeze simulator, green flag both pumps and then place simulator in run.
- Open 1-CS-MOV-101A-D.
- Implement the following overrides to prevent 1-CS-P-1B from being secured from MCR and 1-CS-MOV-101C/D from closing with control switch: MOVCS101C_OPEN & MOVCS101D_OPEN to ON, CSP1B_STOP & CSP1B_LOCK to OFF.
- Place the following Remotes on triggers: CSMOV101C & CSMOV101D to rack-out, CSMOV101C & CSMOV101D manual valves to 0% (closed).

Initiating Cues

- 1B-A6/B6, CTMT PART PRESS -0.1 PSI CH 1 / 2 remain locked in.
- Shift Manager direction.

Directions to the Applicant

- I am the Shift Manager and you are the Unit RO.
- Unit 1 is at Hot Shutdown.
- There are NO personnel in Unit 1 containment.
- An inadvertent CS actuation occurred and we have received annunciators 1B-A6 and 1B-B6.
- Annunciator response 1B-A6 has been initiated.
- Here's a copy of annunciator response 1B-A6. I need you to perform attachment 1 of ARP 1B-A6, steps 1-6 only.
- When you finish the actions necessary to complete attachment 1, please inform me.

Notes

PERFORMANCE CHECKLIST

Notes to the Evaluator

- Task critical elements are bolded and noted at the end of the step as CRITICAL STEP.
- *An additional instructor may be needed to silence and acknowledge alarms for the examinee.*
- **START TIME:**

STEP 1: ***STEP 1 -*** Verify reset or reset HI HI CLS signal. **STANDARD:** • Verifies annunciators 1B-C4 and 1B-C5 are not lit. **EVALUATOR'S NOTE: N/A** **COMMENTS:**	_____ **SAT** _____ **UNSAT**
STEP 2: ***STEP 2*** - Place control switch(es) for running CS pump(s) in PTL. • 1-CS-P-1A • 1-CS-P-1B **STANDARD:** • **Places control switch 1-CS-P-1A in PTL and verifies zero amps. This is a Critical Task.** • Places control switch for 1-CS-P-1B in PTL. • Recognizes 1-CS-P-1B did NOT stop by observing red light on and amps indicated. **EVALUATOR'S NOTE: N/A** **Booth Operator:** When called to locally open 1-EP-BKR-14J-5, implement trigger 9 and inform the candidate that a time compression has occurred and 1-EP-BKR-14J-5 is open. **COMMENTS:**	_____ **SAT** _____ **UNSAT**

STEP 3: ***Step 3 –*** IF CS pump(s) will NOT stop from the MCR, THEN locally open supply breaker(s): • 1-CS-P-1A, 14H-5 • 1-CS-P-1B, 14J-5 **STANDARD:** • **Directs Operator to locally open supply breaker 1-CS-P-1B supply breaker 14J-5. This is a Critical Task.** • **When local operator reports 14J-5 is open, recognizes breaker for 1-CS-P-1B is open (red light off). This is a Critical Task.** **EVALUATOR'S NOTE: N/A** **BOOTH OPERATOR'S NOTE:** When directed to locally open 14J-5, inform the candidate that a time compression has occurred and 14J-5 is open. **COMMENTS:**	_____ **SAT** _____ **UNSAT**
STEP 4: ***Note prior to Step 4*** **NOTE:** The CS Pump Discharge MOVs will not close if the HI HI CLS signal is present. **STANDARD:** • Acknowledges note. **EVALUATOR'S NOTE: N/A** **COMMENTS:**	_____ **SAT** _____ **UNSAT**

STEP 5: ***Step 4 -*** Verify closed or close CS PUMP DISCH MOV(s): • 1-CS-MOV-101A • 1-CS-MOV-101B • 1-CS-MOV-101C • 1-CS-MOV-101D **STANDARD:** • **Closes 1-CS-MOV-101A (red light off, green light on). This is a Critical Task.** • **Closes 1-CS-MOV-101B (red light off, green light on). This is a Critical Task.** • Closes 1-CS-MOV-101C (red light off, green light on) • Recognizes 1-CS-MOV-101C did NOT close • Closes 1-CS-MOV-101D (red light off, green light on) • Recognizes 1-CS-MOV-101D did NOT close **EVALUATOR'S NOTE: N/A** **COMMENTS:**	_____ **SAT** _____ **UNSAT**
STEP 6: ***Step 5 -*** IF CS PUMP DISCH MOV(s) will NOT close, THEN do the following: a. Send an Operator to Unit 1 Cable Vault and an Operator to Unit 1 Safeguards. b. Direct Operator in Unit 1 Cable Vault to open MOV supply breaker(s) for MOV(s) which will not close. • 1-CS-MOV-101A, 1H1-2S-1A • 1-CS-MOV-101B, 1J1-2W-5A • 1-CS-MOV-101C, 1H1-2S-2B • 1-CS-MOV-101D, 1J1-2W-4A c. WHEN breaker(s) open, THEN have Operator in Safeguards locally close affected MOV(s).	_____ **SAT** _____ **UNSAT**

STANDARD: • **Directs Operator to locally open breaker for 1-CS-MOV-101C, 1H1-2S-2B. This is a Critical Task.** • **Directs Operator to locally open breaker for 1-CS-MOV-101D, 1J1-2W-4A. This is a Critical Task.** • Once breakers reported open, directs local closure of 1-CS-MOV-101C and 1-CS-MOV-101D. **EVALUATOR'S NOTE: N/A** **Booth Operator:** When called to locally open 1-EP-BKR-1H1-2S-2B & 1-EP-BKR-1J1-2W-4A, implement triggers 3 & 5 and inform the candidate that a time compression has occurred and 1-EP-BKR-1H1-2S-2B & 1-EP-BKR-1J1-2W-4A are open. **Booth Operator:** When called to locally close 1-CS-MOV-101C & 1-CS-MOV-101D, implement trigger 7 and inform the candidate that a time compression has occurred and 1-CS-MOV-101C & 1-CS-MOV-101D are closed. **COMMENTS:**	
STEP 7: ***Step 6 –*** Verify closed or close CHEM ADD TK OUTLET MOVs: • 1-CS-MOV-102A • 1-CS-MOV-102B **STANDARD:** • Verifies 1-CS-MOV-102A and 1-CS-MOV-102B closed by observing red light off and green light on. **EVALUATOR'S NOTE: N/A** **COMMENTS:**	_____ **SAT** _____ **UNSAT**

STEP 8: REPORT TO SHIFT SUPERVISOR (EVALUATOR). **STANDARD:** Verbal status report that Attachment 1 of Annunciator response 1B-A6, steps 1-6 are complete. **EVALUATOR'S NOTE: N/A** **COMMENTS:**	_____ **SAT** _____ **UNSAT**

STOP TIME:

_____

_____

_____

_____

_____

Operator Directions Handout
(TO BE READ TO APPLICANT BY EXAMINER)

Task

- Task is to be performed in the simulator.
- Perform Attachment 1, steps 1-6, of ARP 1B-A6.

Directions

The evaluator will explain the initial conditions of the task to be performed and will provide the initiating cue. Ensure you indicate to the evaluator when you understand your assigned task

Initial Conditions

- Spurious CS actuation has occurred at HSD.

Initiating Cues

- I am the Shift Manager and you are the Unit RO.
- Unit 1 is at Hot Shutdown.
- There are NO personnel in Unit 1 containment.
- An inadvertent CS actuation occurred and we have received annunciators 1B-A6 and 1B-B6.
- Here's a copy of annunciator response 1B-A6. I need you to perform attachment 1 of ARP 1B-A6, steps 1-6 only.
- When you finish the actions necessary to complete attachment 1, please inform me.

Operator Directions Handout
(TO BE GIVEN TO APPLICANT)

Initial Conditions

- Spurious CS actuation has occurred at HSD.

Initiating Cues

- I am the Shift Manager and you are the Unit RO.
- Unit 1 is at Hot Shutdown.
- There are NO personnel in Unit 1 containment.
- An inadvertent CS actuation occurred and we have received annunciators 1B-A6 and 1B-B6.
- Here's a copy of annunciator response 1B-A6. I need you to perform attachment 1 of ARP 1B-A6, steps 1-6 only.
- When you finish the actions necessary to complete attachment 1, please inform me.

1. ___ Verify reset or reset HI HI CLS signal.

2. ___ Place control switch(es) for running CS pump(s) in PTL.

   ☐ • 1-CS-P-1A

   ☐ • 1-CS-P-1B

3. ___ IF CS pump(s) will NOT stop from the MCR, THEN locally open supply breaker(s):

   ☐ • 1-CS-P-1A, 14H-5

   ☐ • 1-CS-P-1B, 14J-5

NOTE: The CS Pump Discharge MOVs will not close if the HI HI CLS signal is present.

4. ___ Verify closed or close CS PUMP DISCH MOV(s):

   ☐ • 1-CS-MOV-101A

   ☐ • 1-CS-MOV-101B

   ☐ • 1-CS-MOV-101C

   ☐ • 1-CS-MOV-101D

5. ___ IF CS PUMP DISCH MOV(s) will NOT close, THEN do the following:

   ___ a. Send an Operator to Unit 1 Cable Vault and an Operator to Unit 1 Safeguards.

   ___ b. Direct Operator in Unit 1 Cable Vault to open MOV supply breaker(s) for MOV(s) which will not close.

   ☐ • 1-CS-MOV-101A, 1H1-2S-1A

   ☐ • 1-CS-MOV-101B, 1J1-2W-5A

   ☐ • 1-CS-MOV-101C, 1H1-2S-2B

   ☐ • 1-CS-MOV-101D, 1J1-2W-4A

   ___ c. WHEN breaker(s) open, THEN have Operator in Safeguards locally close affected MOV(s).

6. ___ Verify closed or close CHEM ADD TK OUTLET MOVs:
   - ☐ • 1-CS-MOV-102A
   - ☐ • 1-CS-MOV-102B

7. ___ Consult with Station Management on desired course of action.

8. ___ WHEN both of the following conditions are met, THEN return CS pump control switches to AUTO.
   - ☐ • The cause of the spurious actuation has been corrected
   - ☐ • Station Management permission has been granted

9. ___ Review Tech Spec 3.8, Containment.

10. ___ Increase surveillance of RCP parameters.

11. ___ RETURN TO procedure Step 10.

U.S. Nuclear Regulatory Commission
Surry Power Station

SR10301
Simulator Job Performance Measure 064.A2.05 (3.1/3.2)
Alternate

Applicant_____ Start Time_____

Examiner_____

Date _____ Stop Time_____

Title

ALIGN THE EMERGENCY BUS IN ACCORDANCE WITH AP-10.07 ATTACHMENT 4

K/A: 064.A2.05 Ability to (a) predict the impacts of the following malfunctions or operations on the ED/G system; and (b) based on those predictions, use procedures to correct, control, or mitigate the consequences of those malfunctions or operations: Loading the ED/G.

Applicability	Estimated Time	Actual Time
RO/SRO(I)	15 minutes	

Conditions

- Task is to be PERFORMED in the simulator.
- 1-CH-P-1B is in service. 1-CH-P-1A and 1C are in AUTO. 1-VS-F-58A is in service on the fuel building. Breaker 15H8 spuriously opened and #1 EDG is supplying Unit 1 H Bus Loads.

Standards

- 1-AP-10.07, LOSS OF UNIT 1 POWER, Attachment 4 completed.

Initiating Cues

- 1-AP-10.07, LOSS OF UNIT 1 POWER, Step 41.
- Shift Manager Direction.

Terminating Cues

- Attachment 4 of 1-AP-10.07, LOSS OF UNIT 1 POWER, completed.

Procedures

- Attachment 4 of 1-AP-10.07, LOSS OF UNIT 1 POWER.

Tools and Equipment

- None

Safety Considerations

- None

Simulator Setup

- Recall IC-325 OR
- Call up 100% power IC & initialize. Verify that 1-CH-P-1B is running and 1-CH-P-1A and 1-CH-P-1C are in auto after stop.
- Place the 58A fan in service on the fuel building.
- Implement the following malfunction to cause breaker 15H8 to open: EL4901
- Implement the following override to automatically actuate when 1-CH-P-1A or 1-CH-P-1C is started: EDG1_MW = 0.32 (this will cause the #1 EDG MWs to read approximately 1600kW).
- Reset the stub bus and start 1-CC-P-1A.
- Perform 1-AP-10.07 up to step 41 and place the simulator in freeze to await JPM performance.
- **Place an orange magnet on 15H8.**
- **RED FLAG 1-VS-F-58A.**

Initiating Cues

- 1-AP-10.07, Step 41.
- Shift Manager Direction.

Directions to the Applicant

- I am the Shift Manager and you are the Unit RO. 1-VS-F-58A is in service on the fuel building at the request of the fuel handlers in preparations for upcoming activities in the fuel building.
- 1-EP-BKR-15H8 spuriously opened and we are performing 1-AP-10.07, LOSS OF UNIT 1 POWER. #1 EDG is supplying the 1H Bus solely.
- Here is a copy of Attachment 4 of 1-AP-10.07 (EMERGENCY BUS LOAD ALIGNMENT). I need you to perform this attachment in its entirety.
- Inform the Shift Manager prior to performing any component manipulations.
- When you finish the actions necessary to accomplish this, please inform me.

Notes

PERFORMANCE CHECKLIST

Notes to the Evaluator

- Task critical elements are bolded and noted at the end of the step as CRITICAL STEP.
- *An additional instructor may be needed to silence and acknowledge alarms for the examinee.*
- **START TIME:**

STEP 1: ***CAUTIONS AND NOTES PRIOR TO STEP 1*** **CAUTION:** An EDG can NOT initially be loaded to greater than 1300 KW prior to an SI or HI HI CLS, with the exception of loads that will trip when a HI HI CLS occurs, or loads which are running yet assumed to start on a HI HI CLS. **CAUTION:** Total EDG load shall not exceed 2750 KW. **NOTE:** The purpose of this Attachment is to limit EDG loading so that a subsequent HI HI CLS actuation will not overload the EDG. EDG load must be monitored closely during pump operations. One CHG pump must be running on each Emergency Bus solely supplied from an EDG. The other CHG pump supplied from that Emergency Bus must remain in PTL. A 6/30 hour TS 3.0.1 LCO is in effect until one CHG pump is running on an Emergency Bus supplied by an EDG, AND the non-running CHG pump is in PTL. This Tech LCO is entered due to an inoperable Emergency Bus due to EDG loading. **STANDARD:** • Acknowledges cautions and notes. • The candidate may inform the SRO of the tech spec clock. **COMMENTS:**	_____ **SAT** _____ **UNSAT**

STEP 2: ***STEP 1a*** - IF EDG 1 is the sole source of power to Emergency Bus 1H, THEN do the following to limit the amount of instantaneous loading that could occur in the event of a HI HI CLS. a. Verify running or start 1-CH-P-1A or 1-CH-P-1C on Emergency Bus 1H IAW Shift Supervision direction. **STANDARD:** • **Starts 1-CH-P-1A or 1-CH-P-1C by placing control switch to start and observing amps indicated. This is a Critical Task.** **EVALUATOR'S NOTE:** If asked, you have no preference as to which charging pump is started. **COMMENTS:**	_____ **SAT** _____ **UNSAT**
STEP 3: ***Step 1b –*** b. IF a CHG pump can NOT be started on Emergency Bus 1H, THEN do the following. Otherwise, enter N/A. ___ 1. Verify running or start a CHG pump on Emergency Bus 1J. ___ 2. Place CHG pumps supplied from Emergency Bus 1H in PTL. (A supplied by Emergency Bus 1H are in PTL) ___ 3. GO TO Step 2. **STANDARD:** • N/A step 1b. **EVALUATOR'S NOTE: N/A** **COMMENTS:**	_____ **SAT** _____ **UNSAT**
STEP 4: ***Step 1c -*** c. Verify or place the remaining CHG pump supplied from Emergency Bus 1H in PTL. (1-CH-P-1C must remain running if pump is supplied by Emergency Bus 1J)	_____ **SAT** _____ **UNSAT**

STANDARD:

- **Places non-running charging pump (1-CH-P-1A or 1-CH-P-1C) in PTL. This is a Critical Task.**

EVALUATOR'S NOTE: If informed, acknowledge that the 6/30 hr TS clock can be stopped.

COMMENTS:

STEP 5:

Step 1d -

d. IF Emergency Bus 1J is supplied by offsite power, and 1-CH-P-1B is running, THEN stop 1-CH-P-1B and place in Auto.

STANDARD:

- Secures 1-CH-P-1B by taking control switch to stop and returning to auto.
- Observes zero amps indicated.

EVALUATOR'S NOTE: N/A

COMMENTS:

_____ **SAT**

_____ **UNSAT**

STEP 6:

Step 1e -

e. Determine Emergency Bus 1H load limit IAW the following equation, where (x) equals the total of the KW ratings of all RUNNING equipment from the table below.

•_____ + 1300 KW = _____
(x) EDG Load Limit

KW	LOAD
100	1-VS-F-1A
125	1-VS-F-58A (if supplied by 14H1-1)
310	1-FW-P-3A

_____ **SAT**

_____ **UNSAT**

STANDARD: • Identifies that 1-VS-F-1A & 1-VS-F-58A are in service and 1-FW-P-3A is not running. • Places 225 kW on the line in step 1e above the letter (x). • Determines that the load limit is 1525 kW. • Records load limit in step 1e. **EVALUATOR'S NOTE: N/A** **COMMENTS:**	
STEP 7: ***Step 1f –*** f. IF existing EDG load is greater than the limit calculated in substep e. above, THEN reduce EDG load to less than or equal to the calculated load. **STANDARD:** • Identifies that the current EDG loading is approximately 1600 kW. This exceeds the current EDG load limit. • **Informs the SM that the EDG is exceeding its load limit and the procedure states we should reduce load. This is a Critical Task.** **EVALUATOR'S NOTE:** If asked about EDG loading: Ask what the candidate recommends to reduce. Acknowledge and inform the candidate that you understand the EDG is exceeding its load limit and will have another operator investigate what loads can be secured to reduce EDG loading; please continue this attachment. **COMMENTS:**	_____ **SAT** _____ **UNSAT**
STEP 8: ***Step 2 –*** <u>IF</u> EDG 3 is the sole source of power to Emergency Bus 1J, <u>THEN</u> do the following to limit the amount of instantaneous loading that could occur in the event of a HI HI CLS. **STANDARD:** • N/A's step 2. **EVALUATOR'S NOTE: N/A**	_____ **SAT** _____ **UNSAT**

COMMENTS:	
STEP 9: ***Step 3 –*** Notify Auxiliary Building Operator to increase monitoring of CHG pump lube oil temperature. **STANDARD:** • Contacts the Auxiliary Building Operator and directs him to increase monitoring of the Charging Pump Bearing Temperatures. **EVALUATOR'S NOTE: N/A** **COMMENTS:**	_____ **SAT** _____ **UNSAT**
STEP 10: ***Step 4 –*** Increasing monitoring of CHG pump bearing temperatures using the Plant Computer system. **STANDARD:** • Increases monitoring of Charging Pump Bearing Temperatures on the PCS with the CHARGING PUMP SCREEN or states that increased monitoring with the PCS is required. **EVALUATOR'S NOTE: N/A** **COMMENTS:**	_____ **SAT** _____ **UNSAT**
STEP 11: REPORT TO SHIFT SUPERVISOR (EVALUATOR). **STANDARD:** Verbal status report that Attachment 4 of 1-AP-10.07 is complete. **EVALUATOR'S NOTE: N/A** **COMMENTS:**	_____ **SAT** _____ **UNSAT**

STOP TIME:

_____

_____

_____

_____

_____

_____

Operator Directions Handout
(TO BE READ TO APPLICANT BY EXAMINER)

Task

- Task is to be performed in the simulator.
- Perform Attachment 4 of 1-AP-10.07, LOSS OF UNIT 1 POWER.

Directions

The evaluator will explain the initial conditions of the task to be performed and will provide the initiating cue. Ensure you indicate to the evaluator when you understand your assigned task

Initial Conditions

- 1-CH-P-1B is in service. 1-CH-P-1A and 1C are in AUTO. 1-VS-F-58A is in service on the fuel building. Breaker 15H8 spuriously opened and #1 EDG is supplying Unit 1 H Bus Loads.

Initiating Cues

- I am the Shift Manager and you are the Unit RO. 1-VS-F-58A is in service on the fuel building at the request of the fuel handlers in preparations for upcoming activities in the fuel building.
- 1-EP-BKR-15H8 spuriously opened and we are performing 1-AP-10.07, LOSS OF UNIT 1 POWER. #1 EDG is supplying the 1H Bus solely.
- Here is a copy of Attachment 4 of 1-AP-10.07 (EMERGENCY BUS LOAD ALIGNMENT). I need you to perform this attachment in its entirety.
- Inform the Shift Manager prior to performing any component manipulations.
- When you finish the actions necessary to accomplish this, please inform me.

Operator Directions Handout
(TO BE GIVEN TO APPLICANT)

Initial Conditions

- 1-CH-P-1B is in service. 1-CH-P-1A and 1C are in AUTO. 1-VS-F-58A is in service on the fuel building. Breaker 15H8 spuriously opened and #1 EDG is supplying Unit 1 H Bus Loads.

Initiating Cues

- I am the Shift Manager and you are the Unit RO. 1-VS-F-58A is in service on the fuel building at the request of the fuel handlers in preparations for upcoming activities in the fuel building.
- 1-EP-BKR-15H8 spuriously opened and we are performing 1-AP-10.07, LOSS OF UNIT 1 POWER. #1 EDG is supplying the 1H Bus solely.
- Here is a copy of Attachment 4 of 1-AP-10.07 (EMERGENCY BUS LOAD ALIGNMENT). I need you to perform this attachment in its entirety.
- Inform the Shift Manager prior to performing any component manipulations.
- When you finish the actions necessary to accomplish this, please inform me.

* *

CAUTION: An EDG can NOT initially be loaded to greater than 1300 KW prior to an SI or HI HI CLS, with the exception of loads that will trip when a HI HI CLS occurs, or loads which are running yet assumed to start on a HI HI CLS.

* *

* *

CAUTION: Total EDG load shall not exceed 2750 KW.

* *

NOTE:
- The purpose of this Attachment is to limit EDG loading so that a subsequent HI HI CLS actuation will not overload the EDG.
- EDG load must be monitored closely during pump operations.
- One CHG pump must be running on each Emergency Bus solely supplied from an EDG. The other CHG pump supplied from that Emergency Bus must remain in PTL.
- A 6/30 hour TS 3.0.1 LCO is in effect until <u>one</u> CHG pump is running on an Emergency Bus supplied by an EDG, <u>AND</u> the non-running CHG pump is in PTL. This Tech LCO is entered due to an inoperable Emergency Bus due to EDG loading.

1. <u>IF</u> EDG 1 is the sole source of power to Emergency Bus 1H, <u>THEN</u> do the following to limit the amount of instantaneous loading that could occur in the event of a HI HI CLS.

   ___ a. Verify running or start 1-CH-P-1A or 1-CH-P-1C on Emergency Bus 1H IAW Shift Supervision direction.

   ___ b. <u>IF</u> a CHG pump can NOT be started on Emergency Bus 1H, <u>THEN</u> do the following. Otherwise, enter N/A.

   ___ 1. Verify running or start a CHG pump on Emergency Bus 1J.

   ___ 2. Place CHG pumps supplied from Emergency Bus 1H in PTL. (A 6/30 hour Tech Spec 3.0.1 LCO is in effect until CHG pumps supplied by Emergency Bus 1H are in PTL)

   ___ 3. GO TO Step 2.

   ___ c. Verify or place the remaining CHG pump supplied from Emergency Bus 1H in PTL. (1-CH-P-1C must remain running if pump is supplied by Emergency Bus 1J)

   ___ d. <u>IF</u> Emergency Bus 1J is supplied by offsite power, and 1-CH-P-1B is running, <u>THEN</u> stop 1-CH-P-1B and place in Auto.

___ e. Determine Emergency Bus 1H load limit IAW the following equation, where (x) equals the total of the KW ratings of all RUNNING equipment from the table below.

•_____ + 1300 KW = _____
(x) EDG Load Limit

KW	LOAD
100	1-VS-F-1A
125	1-VS-F-58A (if supplied by 14H1-1)
310	1-FW-P-3A

___ f. IF existing EDG load is greater than the limit calculated in substep e. above, THEN reduce EDG load to less than or equal to the calculated load.

NOTE: A 6/30 hour TS 3.0.1 LCO is in effect until one CHG pump is running on an Emergency Bus supplied by an EDG, AND the non-running CHG pump is in PTL. This Tech LCO is entered due to an inoperable Emergency Bus due to EDG loading.

2. IF EDG 3 is the sole source of power to Emergency Bus 1J, THEN do the following to limit the amount of instantaneous loading that could occur in the event of a HI HI CLS.

___ a. Verify running or start 1-CH-P-1B or 1-CH-P-1C on Emergency Bus 1J IAW Shift Supervision direction.

___ b. IF a CHG pump can NOT be started on Emergency Bus 1J, THEN do the following. Otherwise, enter N/A.

___ 1. Verify running or start a CHG pump on Emergency Bus 1H.

___ 2. Place CHG pumps supplied from Emergency Bus 1J in PTL. (A 6/30 hour Tech Spec 3.0.1 LCO is in effect until CHG pumps supplied by Emergency Bus 1J are in PTL)

___ 3. GO TO Step 3.

___ c. Verify or place the remaining CHG pump supplied from Emergency Bus 1J in PTL.

___ d. IF Emergency Bus 1H is supplied by offsite power, and 1-CH-P-1A or 1-CH-P-1C is running, THEN stop CHG pump(s) supplied from Emergency Bus 1H and place in Auto.

___ e. Determine Emergency Bus 1J load limit IAW the following equation, where (x) equals the total of the KW ratings of all RUNNING equipment from the table below.

•_____ + 1300 KW = _____
(x) EDG Load Limit

KW	LOAD
100	1-VS-F-1B
125	1-VS-F-58B (if supplied by 14J1-3)
310	1-FW-P-3B

___ f. IF existing EDG load is greater than the limit calculated in substep e. above, THEN reduce EDG load to less than or equal to the calculated load.

3. Notify Auxiliary Building Operator to increase monitoring of CHG pump lube oil temperature.

4. Increasing monitoring of CHG pump bearing temperatures using the Plant Computer system.

U.S. Nuclear Regulatory Commission
Surry Power Station

SR10301
Simulator Job Performance Measure 071.A3.03 (3.6/3.8)
Alternate

Applicant_____ Start Time_____

Examiner_____

Date _____ Stop Time_____

Title

WASTE GAS DECAY TANK RELEASE ISOLATION.

K/A: 071.A3.03 Ability to monitor automatic operation of the Waste Gas Disposal System including: Radiation monitoring system alarm and actuating signals.

Applicability	**Estimated Time**	**Actual Time**
RO/SRO(I)	13 minutes	

Conditions

- Task is to be PERFORMED in the simulator.
- Release of 'B' Waste Gas Decay Tank is in progress. The team is making preparations to run #1 EDG for its monthly performance test.

Standards

- Release isolated. 1-GW-FCV-101 closed, 1-GW-FCV-160 closed, and 2-GW-FCV-260 closed IAW RMA-C6 and/or RMA-C7.

Initiating Cues

- Annunciators RMA-C6, PROCESS VENT PART ALERT/HI, and/or 0-RMA-C7, PROCESS VENT NORMAL RANGE GAS ALERT/HI.
- Shift Manager direction.

Terminating Cues

- Steps 1-5 of RMA-C6 and/or RMA-C7 completed.

Procedures

- 0-RMA-C6, PROCESS VENT PART ALERT/HI, and/or 0-RMA-C7, PROCESS VENT NORMAL RANGE GAS ALERT/HI.

Tools and Equipment

- None

Safety Considerations

- None

Simulator Setup

- Recall IC-329 OR
- Call up 100% power IC and initialize.
- Enter malfunctions for Disable AUTO CLOSURE for 1-GW-FCV-101, 1-GW-FCV-160, 2-GW-FCV-260. Enter overrides for Process Vent Particulate and Gas RMs: RM0601 to 40% and RM0602 to 60% and place on trigger 1.
- Place simulator in run and implement trigger 1 when ready to perform JPM.
- **HAVE A SIGNED OFF COPY OF OP-23.2.4, RELEASE OF WASTE GAS DECAY TANK 1B, AVAILABLE IN CASE THE RO ASKS TO REVIEW/LOOK AT PROCEDURE.**

Initiating Cues

- Annunciators RMA-C6, PROCESS VENT PART ALERT/HI, and/or 0-RMA-C7, PROCESS VENT NORMAL RANGE GAS ALERT/HI.
- Shift Manager direction.

Directions to the Applicant

- I am the Shift Manager. You are the 3rd RO. The unit is at 100% power and stable. 'B" Waste Gas Decay Tank release is in progress and we are currently making preparations to run #1 EDG for its monthly surveillance test.
- An event is about to occur and I need you to respond IAW applicable procedures.

Notes

PERFORMANCE CHECKLIST

Notes to the Evaluator

- Task critical elements are bolded and noted at the end of the step as CRITICAL STEP.
- *An additional instructor may be needed to silence and acknowledge alarms for the examinee.*
- **START TIME:**

Annunciators RMA-C6, PROCESS VENT PART ALERT/HI, and RMA-C7, PROCESS VENT NORMAL RANGE GAS ALERT/HI will alarm. Performing either ARP will satisfy performance of the JPM. Steps 1-6 of either ARP are identical.	
STEP 1: ***NOTES PRIOR TO STEP 1*** **NOTE:** The MGP Process Vent channel sensing high radiation will buzz with an audible alarm. Pressing the blue SEL key on the display unit will silence the alarm. This annunciator does NOT have reflash capability. This MGP remote display unit indicating high radiation will buzz with an audible alarm. **STANDARD:** • Acknowledges notes. **EVALUATOR'S NOTE: N/A** **COMMENTS:**	_____ **SAT** _____ **UNSAT**
STEP 2: ***STEP 1*** - VERIFY ALARM - READING ON MONITOR OR CHART RECORDER GREATER THAN OR EQUAL TO ALERT SETPOINT • 1-GW-RI-130A • 1-RM-RR-132, Ch 1 • 1-RM-RR-132, Ch 4 **STANDARD:** • Checks readings on radiation monitors greater than alert setpoint or checks that chart recorder indication is greater than alert setpoint.	_____ **SAT** _____ **UNSAT**

EVALUATOR'S NOTE: N/A **COMMENTS:**	
STEP 3: ***Step 2 –*** VERIFY PROCESS VENT FLOW RATE DEVICE - OPERABLE **STANDARD:** • Checks that one process vent blower is in service by checking red light on and green light off for either 1-GW-F-1A or 1-GW-F-1B. • Verifies process vent flow indicated. **EVALUATOR'S NOTE: N/A** **COMMENTS:**	_____ **SAT** _____ **UNSAT**
STEP 4: ***Caution and Note prior to Step 3*** **CAUTION:** When CTMT Vacuum Pump Discharge Isolation valve 1-GW-FCV-160 or 2-GW-FCV-260 is closed, the associated Vacuum Pumps must be placed in OFF. **NOTE:** If a high alarm has actuated, the automatic functions associated with that monitor shall be verified or performed. **STANDARD:** • Acknowledges caution and note. **EVALUATOR'S NOTE: N/A** **COMMENTS:**	_____ **SAT** _____ **UNSAT**

STEP 5: ***Step 3 -*** CONSULT SHIFT SUPERVISION TO DETERMINE IF GW SHOULD BE ISOLATED **STANDARD:** • Asks SM if GW should be isolated. **EVALUATOR'S NOTE:** If asked, respond by saying "I need you to perform the actions for a high radiation alarm". **COMMENTS:**	_____ **SAT** _____ **UNSAT**
STEP 6: ***Step 4 -*** VERIFY OR PERFORM AUTO ACTIONS • Decay Tank Bleed Isolation valve 1-GW-FCV-101 - CLOSED • CTMT Vacuum Pump Discharge Isolation valve 1-GW-FCV-160 - CLOSED • CTMT Vacuum Pump Discharge Isolation valve 2-GW-FCV-260 - CLOSED **STANDARD:** • **Closes 1-GW-FCV-101 by taking control switch to close and observing green light on and red light off OR by pressing the auto/manual station close arrow to close the valve. This is a Critical Task.** • **Closes 1-GW-FCV-160 by taking control switch to close and observing green light on and red light off. This is a Critical Task.** • **Closes 2-GW-FCV-260 by taking control switch to close and observing green light on and red light off. This is a Critical Task.** **EVALUATOR'S NOTE: N/A** **COMMENTS:**	_____ **SAT** _____ **UNSAT**

STEP 7: ***Step 5 –*** PLACE CTMT VACUUM PUMPS IN OFF • 1-CV-P-1A • 1-CV-P-1B • 2-CV-P-1A • 2-CV-P-1B **STANDARD:** • Places control switches to the "off" position for 1-CV-P-1A and 1-CV-P-1B. • Requests Unit 2 to place control switches for 2-CV-P-1A and 2-CV-P-1B to the "off" position. **EVALUATOR'S NOTE: N/A** **COMMENTS:**	_____ **SAT** _____ **UNSAT**
STEP 8: ***Step 6 –*** NOTIFY HP TO DO THE FOLLOWING: a) Verify area evacuated as necessary b) Control access as necessary c) Sample d) Contact HP to verify activity within limits e) Investigate cause **STANDARD:** • NONE **EVALUATOR'S NOTE:** When candidate picks up phone or gaitronics to make notifications, inform the candidate that another RO will perform that action and complete the ARP. This JPM is complete. **COMMENTS:**	_____ **SAT** _____ **UNSAT**

STOP TIME:

_____

_____

_____

_____

_____

_____

Operator Directions Handout
(TO BE READ TO APPLICANT BY EXAMINER)

Task

- Task is to be performed in the simulator.
- Isolate release by performing Steps 1-5 of RMA-C6 and/or RMA-C7 (1-GW-FCV-101 closed, 1-GW-FCV-160 closed, 2-GW-FCV-260 closed).

Directions

The evaluator will explain the initial conditions of the task to be performed and will provide the initiating cue. Ensure you indicate to the evaluator when you understand your assigned task

Initial Conditions

- Release of 'B' Waste Gas Decay Tank is in progress. The team is making preparations to run #1 EDG for its monthly performance test.

Initiating Cues

- I am the Shift Manager. You are the 3rd RO. The unit is at 100% power and stable. 'B" Waste Gas Decay Tank release is in progress and we are currently making preparations to run #1 EDG for its monthly surveillance test.
- An event is about to occur and I need you to respond IAW applicable procedures.

Operator Directions Handout
(TO BE GIVEN TO APPLICANT)

Initial Conditions

- Release of 'B' Waste Gas Decay Tank is in progress. The team is making preparations to run #1 EDG for its monthly performance test.

Initiating Cues

- I am the Shift Manager. You are the 3rd RO. The unit is at 100% power and stable. 'B" Waste Gas Decay Tank release is in progress and we are currently making preparations to run #1 EDG for its monthly surveillance test.
- An event is about to occur and I need you to respond IAW applicable procedures.

SURRY POWER STATION

ANNUNCIATOR RESPONSE PROCEDURE

NUMBER	PROCEDURE TITLE	REVISION
0-RMA-C6	PROCESS VENT PART ALERT / HI (WITH 1 ATTACHMENT)	1
		PAGE 1 of 7

REFERENCES RMA-27

1) UFSAR 11.3
2) VPAP-2103, Offsite Dose Calculation Manual, Section 6.3.2
3) DCP 01-022, Ventilation Radiation Monitoring (Kaman) System Replacement

PROBABLE CAUSE

1) Alarm actuates when 1-GW-RM-130A, Rad Monitor Process Vent Particulate Detector, detects Process Vent activity greater than or equal to setpoint.

   High activity may be caused by one or more of the following:

   - Discharge of Waste Gas Decay Tank.
   - High RCS radioactivity.
   - Overpressure or relief valve failure on a system discharging to Process Vent.
   - Faulty monitor filter operation.
   - Radioactive material transport in vicinity of monitor.

2) Instrumentation failure has occurred.

CONTINUOUS USE

STEP	ACTION/EXPECTED RESPONSE	RESPONSE NOT OBTAINED

NOTE:
- The MGP Process Vent channel sensing high radiation will buzz with an audible alarm. Pressing the blue SEL key on the display unit will silence the alarm.
- This annunciator does NOT have reflash capability. This MGP remote display unit indicating high radiation will buzz with an audible alarm.

1. ___ VERIFY ALARM - READING ON MONITOR OR CHART RECORDER GREATER THAN OR EQUAL TO ALERT SETPOINT

☐ • 1-GW-RI-130A
☐ • 1-RM-RR-132, Ch 1
☐ • 1-RM-RR-132, Ch 4

Do the following:

a) Increase surveillance on the following monitors:

☐ • 1-GW-RI-130B
☐ • 1-GW-RI-130C

☐ b) Evaluate entry into 0-AP-10.13, LOSS OF MAIN CONTROL ROOM ANNUNCIATORS.

☐ c) Initiate a Work Request.

☐ d) GO TO Step 15.

2. ___ VERIFY PROCESS VENT FLOW RATE DEVICE - OPERABLE

Do the following:

a) Verify one Process Vent Blower in service:

☐ • 1-GW-F-1A
☐ • 1-GW-F-1B

☐ b) Estimate flow rate every 4 hrs.

☐ c) Record flow rate in Unit 1 Narrative Log in MCR.

STEP	ACTION/EXPECTED RESPONSE	RESPONSE NOT OBTAINED

* *

CAUTION: When CTMT Vacuum Pump Discharge Isolation valve 1-GW-FCV-160 or 2-GW-FCV-260 is closed, the associated Vacuum Pumps must be placed in OFF.

* *

NOTE: If a high alarm has actuated, the automatic functions associated with that monitor shall be verified or performed.

3. ___ CONSULT SHIFT SUPERVISION TO DETERMINE IF GW SHOULD BE ISOLATED — ☐ GO TO Step 6.

4. ___ VERIFY OR PERFORM AUTO ACTIONS:

- ☐ • Decay Tank Bleed Isolation valve 1-GW-FCV-101 - CLOSED
- ☐ • CTMT Vacuum Pump Discharge Isolation valve 1-GW-FCV-160 - CLOSED
- ☐ • CTMT Vacuum Pump Discharge Isolation valve 2-GW-FCV-260 - CLOSED

5. ___ PLACE CTMT VACUUM PUMPS IN OFF

- ☐ • 1-CV-P-1A
- ☐ • 1-CV-P-1B
- ☐ • 2-CV-P-1A
- ☐ • 2-CV-P-1B

STEP	ACTION/EXPECTED RESPONSE	RESPONSE NOT OBTAINED
6. ___	NOTIFY HP TO DO THE FOLLOWING:	
☐	a) Verify area evacuated as necessary	
☐	b) Control access as necessary	
☐	c) Sample	
☐	d) Contact HP to verify activity within limits	☐ d) Initiate a Work Request.
☐	e) Investigate cause	
7. ___	ISOLATE KNOWN RELEASES TO PROCESS VENTS:	
	a) Secure any known venting evolution:	
☐	• SI ACCUM(s)	
☐	• PRT	
	b) Attempt to isolate leakage:	
☐	• WGDT	
☐	• CTMT VAC PUMPS	
☐	• PRT	
☐	• SI ACCUM(s)	
☐	c) Coordinate with HP to determine need for setpoint change	

STEP	ACTION/EXPECTED RESPONSE	RESPONSE NOT OBTAINED
*8. ___	CHECK ALARM - READING ON MONITOR OR CHART RECORDER GREATER THAN OR EQUAL TO HI SETPOINT	Do the following: ☐ a) Increase surveillance of radiation trend. ☐ b) Continue efforts to isolate leakage, as necessary. ☐ c) IF CTMT Vacuum Pumps stopped AND WGDT isolated in Step 4, THEN realign when directed by Shift Supervision. ☐ d) IF HI setpoint exceeded, THEN perform Steps 9 through 14. ☐ e) GO TO Step 15.
9. ___	CHECK ACTIVITY LEVEL - DECREASING	☐ GO TO Step 11.
10. ___	GO TO STEP 12	

STEP	ACTION/EXPECTED RESPONSE	RESPONSE NOT OBTAINED
11. ___	IDENTIFY SOURCE OF RELEASE:	
	☐ a) Close trip valve 1-GW-HCV-106	
	☐ b) Close isolation valves IAW Attachment 1	
	☐ c) Open trip valve 1-GW-HCV-106	
	☐ d) Open isolation valves closed in Attachment 1 individually to identify source of release	
	☐ e) Verify source of release isolated	e) Do the following: ☐ 1) Monitor systems with relief valves discharging to process vent. ☐ 2) Isolate release.
	☐ f) Return unaffected systems to service	
*12. ___	VERIFY HIGH ALARM - CLEAR	Do the following: ☐ a) WHEN high alarm clears, THEN perform Steps 13 and 14. ☐ b) GO TO Step 15.
13. ___	OPEN CTMT VACUUM PUMP DISCHARGE ISOLATION VALVES 1-GW-FCV-160 AND 2-GW-FCV-260 AS NECESSARY	
14. ___	START CTMT VAC PUMPS AS NECESSARY	

STEP	ACTION / EXPECTED RESPONSE	RESPONSE NOT OBTAINED

15. ___ PROVIDE NOTIFICATIONS AS NECESSARY:

- ☐ • OMOC
- ☐ • STA
- ☐ • Shift Supervision
- ☐ • HP
- ☐ • I&C

- END -

1. Close the following isolation valves:

- CC Surge Tank, HCV-CC-100 (1-CC-TK-1)

- Laboratory Drain Tank, 1-LW-16 (1-PL-TK-4) (2 ft North of South Wall, 2 ft East of West Wall, at Gate 5)
- Spent Resin Catch Tank, 1-LW-676 (1-LW-TK-14) (Decon Bldg, Gate 27)
- Spent Resin Blend Tank, 1-LW-646 (1-LW-TK-15) (Decon Bldg, Gate 22, 1 ft North of South Wall)

- SFP IX, 1-FC-17 (1-FC-I-1) (IX Alley, Reach Rod, 15 ft Northwest of Gate 14)

- BR Cleanup IX 2A, 1-BR-255 (1-BR-I-2A) (1 ft Southeast of Boron Cleanup IX A 13 ft off floor)
- BR Cleanup IX 2B, 1-BR-256 (1-BR-I-2B) (1 ft Southwest of Boron Cleanup IX A 13 ft off floor)
- BR Cs Removal IX 1A, 1-BR-282 (1-BR-I-1A) (IX Alley, 7 ft off floor)
- BR Cs Removal IX 1B, 1-BR-280 (1-BR-I-1B) (IX Alley, 7 ft off floor)

- Unit 1 Primary Vent, 1-VA-1 (1-DA-TK-1) (Valve normally locked closed)
- Unit 2 Primary vent, 2-VA-1 (2-DA-TK-1) (Valve normally locked closed)

- Unit 1 CVCS Deborating Demineralizer 3A, 1-CH-41 (1-CH-I-3A) (IX Alley, 8 ft off floor)
- Unit 1 CVCS Deborating Demineralizer 3B, 1-CH-48 (1-CH-I-3B) (IX Alley, 8 ft off floor)
- Unit 1 CVCS Cation Demineralizer, 1-CH-54 (1-CH-I-2) (IX Alley, 8 ft off floor)
- Unit 1 CVCS Mixed Bed Demineralizer 1A, 1-CH-60 (1-CH-I-1A) (IX Alley, 8 ft off floor)
- Unit 1 CVCS Mixed Bed Demineralizer 1B, 1-CH-66 (1-CH-I-1B) (IX Alley, 8 ft off floor)
- Unit 2 CVCS Deborating Demineralizer 3A, 2-CH-41 (2-CH-I-3A) (IX Alley, 7 ft off floor)
- Unit 2 CVCS Deborating Demineralizer 3B, 2-CH-48 (2-CH-I-3B) (IX Alley, 7 ft off floor)
- Unit 2 CVCS Cation Demineralizer, 2-CH-54 (2-CH-I-2) (IX Alley, 7 ft off floor)
- Unit 2 CVCS Mixed Bed Demineralizer 1A, 2-CH-60 (2-CH-I-1A) (IX Alley, 5.5 ft off floor)
- Unit 2 CVCS Mixed Bed Demineralizer 1B, 2-CH-66 (2-CH-I-1B) (IX Alley, 7 ft off floor)

SURRY POWER STATION

ANNUNCIATOR RESPONSE PROCEDURE

NUMBER	PROCEDURE TITLE	REVISION
0-RMA-C7	PROCESS VENT NORMAL RANGE GAS ALERT / HI (WITH 1 ATTACHMENT)	1
		PAGE 1 of 8

REFERENCES RMA-29

1) UFSAR 11.3
2) VPAP-2103, Offsite Dose Calculation Manual, Section 6.3.2
3) DCP 01-022, Ventilation Radiation Monitoring (Kaman) System Replacement

PROBABLE CAUSE

1) Alarm actuates when 1-GW-RM-130B, Rad Monitor Process Vent Noble Gas Detector, detects Process Vent activity greater than or equal to setpoint.

   High activity may be caused by one or more of the following:

   - Discharge of Waste Gas Decay Tank.
   - High RCS radioactivity.
   - Overpressure or relief valve failure on a system discharging to Process Vent.
   - Faulty monitor filter operation.
   - Radioactive material transport in vicinity of monitor.

2) Instrumentation failure has occurred.

CONTINUOUS USE

STEP	ACTION/EXPECTED RESPONSE	RESPONSE NOT OBTAINED

NOTE:
- The MGP Process Vent channel sensing high radiation will buzz with an audible alarm. Pressing the blue SEL key on the display unit will silence the alarm.
- This annunciator does NOT have reflash capability. This MGP remote display unit indicating high radiation will buzz with an audible alarm.

1.___ VERIFY ALARM - READING ON MONITOR OR CHART RECORDER GREATER THAN OR EQUAL TO ALERT SETPOINT

- ☐ • 1-GW-RI-130B
- ☐ • 1-RM-RR-132, Ch 2
- ☐ • 1-RM-RR-132, Ch 5

Do the following:

a) Increase surveillance on the following monitors:

- ☐ • 1-GW-RI-130A
- ☐ • 1-GW-RI-130C

☐ b) Evaluate entry into 0-AP-10.13, LOSS OF MAIN CONTROL ROOM ANNUNCIATORS.

☐ c) Initiate a Work Request.

☐ d) GO TO Step 18.

2.___ VERIFY PROCESS VENT FLOW RATE DEVICE - OPERABLE

Do the following:

a) Verify one Process Vent Blower in service:

- ☐ • 1-GW-F-1A
- ☐ • 1-GW-F-1B

☐ b) Estimate flow rate every 4 hrs.

☐ c) Record flow rate in Unit 1 Narrative Log in MCR.

STEP	ACTION/EXPECTED RESPONSE	RESPONSE NOT OBTAINED

* *

CAUTION: When CTMT Vacuum Pump Discharge Isolation valve 1-GW-FCV-160 or 1-GW-FCV-260 is closed, the associated Vacuum Pumps must be placed in OFF.

* *

NOTE: If a high alarm has actuated, the automatic functions associated with that monitor shall be verified or performed.

3. ___ CONSULT SHIFT SUPERVISION TO DETERMINE IF GW SHOULD BE ISOLATED — ☐ GO TO Step 6.

4. ___ VERIFY OR PERFORM AUTO ACTIONS:

- ☐ • Decay Tank Bleed Isolation valve 1-GW-FCV-101 - CLOSED
- ☐ • CTMT Vacuum Pump Discharge Isolation valve 1-GW-FCV-160 - CLOSED
- ☐ • CTMT Vacuum Pump Discharge Isolation valve 1-GW-FCV-260 - CLOSED

5. ___ PLACE CTMT VACUUM PUMPS IN OFF

- ☐ • 1-CV-P-1A
- ☐ • 1-CV-P-1B
- ☐ • 2-CV-P-1A
- ☐ • 2-CV-P-1B

STEP	ACTION/EXPECTED RESPONSE	RESPONSE NOT OBTAINED
6. ___	NOTIFY HP TO DO THE FOLLOWING:	
☐	a) Verify area evacuated as necessary	
☐	b) Control access as necessary	
☐	c) Sample	
☐	d) Contact HP to verify activity within limits	☐ d) Initiate a Work Request.
☐	e) Investigate cause	
7. ___	ISOLATE KNOWN RELEASES TO PROCESS VENTS:	
	a) Secure any known venting evolution:	
☐	• SI ACCUM(s)	
☐	• PRT	
	b) Attempt to isolate leakage:	
☐	• WGDT	
☐	• CTMT VAC PUMPS	
☐	• PRT	
☐	• SI ACCUM(s)	
☐	c) Coordinate with HP to determine need for setpoint change	

STEP	ACTION/EXPECTED RESPONSE	RESPONSE NOT OBTAINED
*8. ___	CHECK ALARM - READING ON MONITOR OR CHART RECORDER GREATER THAN OR EQUAL TO HI SETPOINT	Do the following: ☐ a) Increase surveillance of radiation trend. ☐ b) Continue efforts to isolate leakage, as necessary. ☐ c) IF CTMT Vacuum Pumps stopped AND WGDT isolated in Step 4, THEN realign when directed by Shift Supervision. ☐ d) IF HI setpoint exceeded, THEN perform Steps 9 through 16. ☐ e) GO TO Step 18.
9. ___	CHECK ACTIVITY LEVEL - DECREASING	☐ GO TO Step 11.
10. ___	GO TO STEP 14	

STEP	ACTION/EXPECTED RESPONSE	RESPONSE NOT OBTAINED
11.___	IDENTIFY SOURCE OF RELEASE:	
	☐ a) Close trip valve 1-GW-HCV-106	
	☐ b) Close isolation valves IAW Attachment 1	
	☐ c) Open trip valve 1-GW-HCV-106	
	☐ d) Open isolation valves closed in Attachment 1 individually to identify source of release	
	☐ e) Verify source of release isolated	e) Do the following: ☐ 1) Monitor systems with relief valves discharging to process vent. ☐ 2) Isolate release.
	☐ f) Return unaffected systems to service	
	NOTE: A HI HI (H/H) alarm on 1-GW-RI-130B, Remote Indication Process Vent Gas, will swap monitoring to 1-GW-RI-130C, Remote Indication Process Vent AR Gas. The normal range monitor is returned to service by I&C.	
*12.___	CHECK MGPI PROCESS VENT GAS RADIATION MONITORING - SWAPPED TO ACCIDENT RANGE (1-GW-RI-130C)	☐ GO TO Step 14.

STEP	ACTION/EXPECTED RESPONSE	RESPONSE NOT OBTAINED
*13. ___	RETURN MGPI PROCESS VENT GAS RADIATION MONITORING TO NORMAL RANGE (1-GW-RI-130B):	
	a) Check the following:	a) Do the following:
☐	• Reading on 1-GW-RI-130C - NORMAL	☐ 1) WHEN conditions met, THEN perform Steps 13b through 17.
	AND	☐ 2) GO TO Step 18.
☐	• HP concurrence to return monitoring to normal - OBTAINED	
☐	b) Direct I&C to restore MGP Process Vent Rad Monitor to normal range IAW IMP-C-RM-36, CHECKING, REPAIRING, OR REPLACING A COMPONENT IN THE RADIATION MONITORING SYSTEM	
*14. ___	VERIFY HIGH ALARM - CLEAR	Do the following:
		☐ a) WHEN high alarm clears, THEN perform Steps 15 through 17.
		☐ b) GO TO Step 18.
15. ___	OPEN CTMT VACUUM PUMP DISCHARGE ISOLATION VALVES 1-GW-FCV-160 AND 2-GW-FCV-260 AS NECESSARY	
16. ___	START CTMT VAC PUMPS AS NECESSARY	
17. ___	REOPEN 1-GW-HCV-106 AS DIRECTED BY SHIFT SUPERVISION	

STEP	ACTION/EXPECTED RESPONSE	RESPONSE NOT OBTAINED

18. ___ PROVIDE NOTIFICATIONS AS NECESSARY:

- ☐ • OMOC
- ☐ • STA
- ☐ • Shift Supervision
- ☐ • HP
- ☐ • I&C

- END -

1. Close the following isolation valves:

- CC Surge Tank, HCV-CC-100 (1-CC-TK-1)

- Laboratory Drain Tank, 1-LW-16 (1-PL-TK-4) (2 ft North of South Wall, 2 ft East of West Wall, at Gate 5)
- Spent Resin Catch Tank, 1-LW-676 (1-LW-TK-14) (Decon Bldg, Gate 27)
- Spent Resin Blend Tank, 1-LW-646 (1-LW-TK-15) (Decon Bldg, Gate 22, 1 ft North of South Wall)

- SFP IX, 1-FC-17 (1-FC-I-1) (IX Alley, Reach Rod, 15 ft Northwest of Gate 14)

- BR Cleanup IX 2A, 1-BR-255 (1-BR-I-2A) (1 ft Southeast of Boron Cleanup IX A 13 ft off floor)
- BR Cleanup IX 2B, 1-BR-256 (1-BR-I-2B) (1 ft Southwest of Boron Cleanup IX A 13 ft off floor)
- BR Cs Removal IX 1A, 1-BR-282 (1-BR-I-1A) (IX Alley, 7 ft off floor)
- BR Cs Removal IX 1B, 1-BR-280 (1-BR-I-1B) (IX Alley, 7 ft off floor)

- Unit 1 Primary Vent, 1-VA-1 (1-DA-TK-1) (Valve normally locked closed)
- Unit 2 Primary vent, 2-VA-1 (2-DA-TK-1) (Valve normally locked closed)

- Unit 1 CVCS Deborating Demineralizer 3A, 1-CH-41 (1-CH-I-3A) (IX Alley, 8 ft off floor)
- Unit 1 CVCS Deborating Demineralizer 3B, 1-CH-48 (1-CH-I-3B) (IX Alley, 8 ft off floor)
- Unit 1 CVCS Cation Demineralizer, 1-CH-54 (1-CH-I-2) (IX Alley, 8 ft off floor)
- Unit 1 CVCS Mixed Bed Demineralizer 1A, 1-CH-60 (1-CH-I-1A) (IX Alley, 8 ft off floor)
- Unit 1 CVCS Mixed Bed Demineralizer 1B, 1-CH-66 (1-CH-I-1B) (IX Alley, 8 ft off floor)
- Unit 2 CVCS Deborating Demineralizer 3A, 2-CH-41 (2-CH-I-3A) (IX Alley, 7 ft off floor)
- Unit 2 CVCS Deborating Demineralizer 3B, 2-CH-48 (2-CH-I-3B) (IX Alley, 7 ft off floor)
- Unit 2 CVCS Cation Demineralizer, 2-CH-54 (2-CH-I-2) (IX Alley, 7 ft off floor)
- Unit 2 CVCS Mixed Bed Demineralizer 1A, 2-CH-60 (2-CH-I-1A) (IX Alley, 5.5 ft off floor)
- Unit 2 CVCS Mixed Bed Demineralizer 1B, 2-CH-66 (2-CH-I-1B) (IX Alley, 7 ft off floor)

U.S. Nuclear Regulatory Commission
Surry Power Station

SR10301
Simulator Job Performance Measure 010.A4.01(3.7/3.5)

Applicant_____ Start Time_____

Examiner_____

Date _____ Stop Time_____

Title

DEPRESSURIZE THE RCS WITH AUX SPRAY DUE TO LOSS OF RCPS IN AP-24.01.

K/A: 010.A4.01 Ability to manually operate and/or monitor in the control room: PZR Spray Valve

Applicability	**Estimated Time**	**Actual Time**
RO	15 minutes	

Conditions

- Task is to be PERFORMED in the simulator.
- A steam generator tube leak of approximately 65 gpm has developed on “C” SG . Reactor has been tripped and 1-AP-24.01, LARGE STEAM GENERATOR TUBE LEAK, is in progress. The team has cooled down the RCS to target temperature and is currently at step 29 “Depressurize RCS to stop breakflow”.

Standards

- RCS depressurized using Aux Spray until termination criteria satisfied (Step 29 complete).

Initiating Cues

- 1-AP-24.01, LARGE STEAM GENERATOR TUBE LEAK, step 29.
- Shift Manager direction.

Terminating Cues

- RCS depressurized using Aux Spray until termination criteria satisfied (Step 29 complete).

Procedures

- 1-AP-24.01, LARGE STEAM GENERATOR TUBE LEAK

Tools and Equipment

- None

Safety Considerations

- None

Simulator Setup

- Recall IC-324 OR
- Call up 100% power IC and initialize.
- Enter malfunctions for SG tube leakage (RC2403) at 7% deg.
- Enter malfunctions to have RCPs trip spuriously trip on swapover (RC5601, RC5602, RC5603).
- Defeat SG level alarms to avoid nuisance alarms (HG5, HG6, HG7).
- Implement all malfunctions and perform AP-16.00, E-0, and AP-24.01 through step 28 to cooldown the RCS to target temperature and stabilize.
- Place the simulator until ready for JPM performance.
- Place orange magnets on 1-RC-P-1A/1B/1C control switches.

Initiating Cues

- 1-AP-24.01, LARGE STEAM GENERATOR TUBE LEAK, step 29.
- Shift Manager direction.

Directions to the Applicant

- I am the Shift Manager. A steam generator tube leak of approximately 65 gpm has developed on “C” SG .
- 1-AP-16.00, RCS LEAKAGE, has been performed. The Reactor has been tripped IAW 1-E-0, REACTOR TRIP OR SAFETY INJECTION, and 1-AP-24.01, LARGE STEAM GENERATOR TUBE LEAK, is in progress.
- All 3 RCPs tripped on swapover.
- The team has cooled down the RCS to target temperature and is currently at step 29 “Depressurize RCS to stop breakflow”.
- I need you to perform step 29 of 1-AP-24.01 in its entirety to depressurize the RCS to stop breakflow.
- When you finish the actions necessary to accomplish this, please inform me.

Notes

PERFORMANCE CHECKLIST

Notes to the Evaluator

- Task critical elements are bolded and noted at the end of the step as CRITICAL STEP.
- *An additional instructor may be needed to silence and acknowledge alarms for the examinee.*
- **START TIME:**

STEP 1: ***STEP 29a -*** DEPRESSURIZE RCS TO STOP BREAKFLOW: a) Normal PRZR spray – AVAILABLE **STANDARD:** • Notes that no RCPs are running and normal spray is not available. • Goes to the RNO. **EVALUATOR'S NOTE: N/A** **COMMENTS:**	_____ **SAT** _____ **UNSAT**
STEP 2: ***STEP 29aRNO*** - DEPRESSURIZE RCS TO STOP BREAKFLOW: a) Do the following: 1) Verify or place normal letdown in service. 2) Close normal PRZR spray valves. 3) Open 1-CH-HCV-1311, CHG AUX spray valve. 4) Close 1-CH-HCV-1310A, CHG Line ISOL Valve. 5) Monitor PRZR level	_____ **SAT** _____ **UNSAT**

STANDARD: • Verifies letdown in service by observing normal letdown flow and pressure. • **Places 1-RC-PCV-1455A and 1-RC-PCV-1455B in manual and closes valves. This is a Critical Task.** • **Opens 1-CH-HCV-1311, CHG AUX spray valve by observing red light on and green light off. This is a Critical Task.** • **Closes 1-CH-HCV-1310A, CHG Line ISOL Valve by observing green light on and red light off. This is a Critical Task.** • Monitors pressurizer level by observing level trend. **EVALUATOR'S NOTE: N/A** **COMMENTS:**	
STEP 3: ***Step 29b –*** DEPRESSURIZE RCS TO STOP BREAKFLOW: b) Spray PRZR with maximum available spray until ANY of the following satisfied: • PRZR level - GREATER THAN 69% OR • RCS subcooling based on CETCs - LESS THAN 30°F OR • RCS Pressure - LESS THAN AFFECTED SG PRESSURE **STANDARD:** • **Sprays with Aux Spray using 1-CH-HCV 1311 until pressurizer level reaches 69%, OR RCS subcooling is less the 30°F, OR RCS pressure is less than "C" SG pressure. This is a Critical Task.** **EVALUATOR'S NOTE: N/A** **COMMENTS:**	_____ **SAT** _____ **UNSAT**
STEP 4: ***Step 29c -*** DEPRESSURIZE RCS TO STOP BREAKFLOW: c) Close spray valves • Normal spray valves OR • Auxiliary spray valve, 1-CH-HCV-1311	_____ **SAT** _____ **UNSAT**

STANDARD: • Closes 1-CH-HCV-1311 when termination criteria satisfied by observing green light on and red light off. **EVALUATOR'S NOTE: N/A** **COMMENTS:**	
STEP 5: ***Step 29d -*** DEPRESSURIZE RCS TO STOP BREAKFLOW: d) Verify open or open 1-CH-HCV-1310A, CHG Line ISOL Valve. **STANDARD:** • Opens 1-CH-HCV-1310A by observing red light on and green light off. **EVALUATOR'S NOTE: N/A** **COMMENTS:**	_____ **SAT** _____ **UNSAT**
STEP 6: ***Step 29e -*** DEPRESSURIZE RCS TO STOP BREAKFLOW: e) Check CHG pumps - ONLY ONE RUNNING **STANDARD:** • Checks 1-CH-P-1C in service by observing red light indication and amps and the 1-CH-P-1A & 1B secure in AUTO. **EVALUATOR'S NOTE: N/A** **COMMENTS:**	_____ **SAT** _____ **UNSAT**

STEP 7: REPORT TO SHIFT SUPERVISOR (EVALUATOR). **STANDARD:** Verbal status report that the RCS is depressurized IAW step 29 of 1-AP-24.01, LARGE STEAM GENERATOR TUBE LEAKAGE. **EVALUATOR'S NOTE: N/A** **COMMENTS:**	_____ **SAT** _____ **UNSAT**

STOP TIME:

_____

_____

_____

_____

_____

_____

Operator Directions Handout
(TO BE READ TO APPLICANT BY EXAMINER)

Task

- Task is to be performed in the simulator.
- Perform Step 29 of 1-AP-24.01, LARGE STEAM GENERATOR TUBE LEAKAGE.

Directions

The evaluator will explain the initial conditions of the task to be performed and will provide the initiating cue. Ensure you indicate to the evaluator when you understand your assigned task

Initial Conditions

- A steam generator tube leak of approximately 65 gpm has developed on “C” SG . Reactor has been tripped and 1-AP-24.01, LARGE STEAM GENERATOR TUBE LEAK, is in progress. The team has cooled down the RCS to target temperature and is currently at step 29 “Depressurize RCS to stop breakflow”.

Initiating Cues

- I am the Shift Manager. A steam generator tube leak of approximately 65 gpm has developed on “C” SG .
- 1-AP-16.00, RCS LEAKAGE, has been performed. The Reactor has been tripped IAW 1-E-0, REACTOR TRIP OR SAFETY INJECTION, and 1-AP-24.01, LARGE STEAM GENERATOR TUBE LEAK, is in progress.
- All 3 RCPs tripped on swapover.
- The team has cooled down the RCS to target temperature and is currently at step 29 “Depressurize RCS to stop breakflow”.
- I need you to perform step 29 of 1-AP-24.01 in its entirety to depressurize the RCS to stop breakflow.
- When you finish the actions necessary to accomplish this, please inform me.

Operator Directions Handout
(TO BE GIVEN TO APPLICANT)

Initial Conditions

- A steam generator tube leak of approximately 65 gpm has developed on “C” SG . Reactor has been tripped and 1-AP-24.01, LARGE STEAM GENERATOR TUBE LEAK, is in progress. The team has cooled down the RCS to target temperature and is currently at step 29 “Depressurize RCS to stop breakflow”.

Initiating Cues

- I am the Shift Manager. A steam generator tube leak of approximately 65 gpm has developed on “C” SG .
- 1-AP-16.00, RCS LEAKAGE, has been performed. The Reactor has been tripped IAW 1-E-0, REACTOR TRIP OR SAFETY INJECTION, and 1-AP-24.01, LARGE STEAM GENERATOR TUBE LEAK, is in progress.
- All 3 RCPs tripped on swapover.
- The team has cooled down the RCS to target temperature and is currently at step 29 “Depressurize RCS to stop breakflow”.
- I need you to perform step 29 of 1-AP-24.01 in its entirety to depressurize the RCS to stop breakflow.
- When you finish the actions necessary to accomplish this, please inform me.

STEP	ACTION/EXPECTED RESPONSE	RESPONSE NOT OBTAINED
29.___	DEPRESSURIZE RCS TO STOP BREAKFLOW:	
☐	a) Normal PRZR spray - AVAILABLE	a) Do the following:
☐		1) Verify or place normal letdown in service.
☐		2) Close normal PRZR spray valves.
☐		3) Open 1-CH-HCV-1311, CHG AUX spray valve.
☐		4) Close 1-CH-HCV-1310A, CHG Line ISOL Valve.
☐		5) Monitor PRZR level.
	b) Spray PRZR with maximum available spray until ANY of the following satisfied:	
☐	• PRZR level - GREATER THAN 69%	
	OR	
☐	• RCS subcooling based on CETCs - LESS THAN 30°F	
	OR	
☐	• RCS Pressure - LESS THAN AFFECTED SG PRESSURE	
	c) Close spray valves	
☐	• Normal spray valves	• Stop RCPs supplying failed spray valves:
☐		• RCP A, 1-RC-PCV-1455A
☐		• RCP C, 1-RC-PCV-1455B
	OR	
☐	• Auxiliary spray valve, 1-CH-HCV-1311	

(STEP 29 CONTINUED ON NEXT PAGE)

STEP	ACTION/EXPECTED RESPONSE	RESPONSE NOT OBTAINED
29.	DEPRESSURIZE RCS TO STOP BREAKFLOW: (Continued)	
	☐ d) Verify open or open 1-CH-HCV-1310A, CHG Line ISOL Valve.	
	☐ e) Check CHG pumps - ONLY ONE RUNNING	☐ e) Stop all but one CHG pump.
30. ___	CHECK CC SYSTEM STATUS:	
	☐ a) Check SW to CC HXs - IN SERVICE	☐ a) Restore SW to CC HXs IAW 0-AP-12.01, LOSS OF INTAKE CANAL LEVEL.
	☐ b) Check CC pumps - AT LEAST ONE RUNNING	b) Do the following:
		☐ 1) Put CC pump control switches in PTL.
		2) Locally throttle CC pump discharge valve to approximately 25% open:
		☐ • 1-CC-558 for 1-CC-P-1A ☐ • 1-CC-564 for 1-CC-P-1B
		☐ 3) Locally close stub bus tie breaker.
		☐ 4) Start one CC pump.
		☐ 5) Locally open discharge valve.
		IF a CC pump can NOT be started, THEN do the following:
		☐ 1) Attempt to crosstie CC systems.
		☐ 2) WHEN CC restored, THEN perform Step 31.
		☐ 3) GO TO Step 32.