U.S. Nuclear Regulatory Commission
Surry Power Station

SR10301
Administrative Job Performance Measure 2.1.20

Applicant_____ Start Time_____

Examiner_____

Date _____ Stop Time_____

Title

Determine Partial Pressure following a Loss of Containment Cooling

K/A: G2.1.20 – Ability to interpret and execute procedure steps. (4.6/4.6)

Applicability	**Est Completion Time**	**Actual Time**
SRO(I)	30 Minutes	_____

Conditions

- Task is to be PERFORMED in the SIMULATOR or CLASSROOM.

Standards

- Correctly determine partial pressure in accordance with ARP-1B-A6 and verifies Tech Spec compliance.

Initiating Cues

- Given simulated plant conditions, perform Attachment 2 of Annunciator Response Procedure (ARP) 1B-A6, Containment Pressure -0.1 PSI Channel 1, to calculate Containment Partial Pressure and Technical Specification Compliance.

Initial Conditions

- I am the Nuclear Shift Manager. I have assigned you to perform Attachment 2 of Annunciator Response Procedure (ARP) 1B-A6, Containment Pressure -0.1 PSI Channel 1, to calculate Containment Partial Pressure and Technical Specification Compliance.

- Approximately 2 hours ago Unit 1 was at 100% power when the operating chilled water system chiller tripped. As a result, annunciators 1B-A6 (CTMT PART PRESS -0.1 PSI CH 1) and 1B-B6 (CTMT PART PRESS -0.1 PSI CH 2) were received.
- The operating team has implemented ARP-1B-A6 up to the point of implementing Attachment 2.
- Maintenance has determined that the chiller will not be returned to service until tomorrow.

Applicable Plant conditions are located below and as attachments to this JPM:

Previous PT-36.00 data:

Date:	Today
Time:	0000
CTMT Air Partial Pressure:	10.41 psia

- Here is a copy of Attachment 2 of Annunciator Response Procedure (ARP) 1B-A6, Containment Pressure -0.1 PSI Channel 1. I need you to perform Attachment 2 of Annunciator Response Procedure (ARP) 1B-A6, Containment Pressure -0.1 PSI Channel 1, to calculate Containment Partial Pressure and Technical Specification Compliance.

- When you have completed this task please inform me of the results.

Terminating Cues

- Steps 1-13 of Attachment 2 of ARP 1B-A6 are complete.

Procedures

- Attachment 2 of procedure 1B-A6, CTMT PRESS –0.1 PSI CH 1
- Tech Spec 3.8

Tools and Equipment

- Calculator
- Steam Tables
- Tech Specs
- DRP-003

Safety Considerations

- None

Notes

PCS Screen Shots are provide to facilitate classroom performance.

Performance Checklist

Notes to the Evaluator.

- Task critical elements are bolded and noted by the words "Critical Step" at the end of the step.
- **START TIME:**

STEP 1:
 	
Notes prior to Step 1 of Attachment 2:
 	
• This calculation is required at a minimum of every 12 hours to satisfy Tech Spec 3.8. However, if CTMT cooling conditions change adversely, this calculation should be performed more frequently, at the discretion of Shift Supervision.
• Performance of this calculation immediately after loss of CTMT cooling is not required; however, it must be performed within 12 hours of the last satisfactory surveillance. (typically within 12 hours of the last valid 1-PT-36 log reading)
• Air partial pressure (P air) is obtained from the formula Ptot - Psat = Pair
• Ptot is CTMT pressure from one of the following:
  o The highest of 1-CV-PI-101A or 1-CV-PI-101B
  o The highest of Unit 1 PCS points P1LM002A, P1LM003A, P1LM001A, or P1LM004A
• Psat is the saturation pressure of the minimum CTMT temperature obtained in Step 3 (using steam tables). This conservatively assumes that the lowest CTMT ambient temperature is at the CTMT saturation temperature. A more precise determination of Psat is allowed in Step 8. This alternative relies on measurement of relative humidity, since the actual saturation temperature is a function of both dry-bulb temperature and relative humidity.
 	
STANDARD:
(a) Acknowledges the notes
 	
EVALUATOR'S NOTE:
• **If asked**, it is desired to perform this calculation now.
 	
COMMENTS:
	_____ **SAT**
	
	_____ **UNSAT**

STEP 2:

Step 1 of Attachment 2:

1. Record the Date, Time, and CTMT Air Partial Pressure from the last valid 1-PT-36 log reading in the first row of the CTMT Pressure Data Table at the end of this attachment.

STANDARD:

a) Obtains required data from supplied PT-36 and records it on LINE 1 of CTMT PRESSURE DATA TABLE of Attachment 2.

EVALUATOR NOTES:

Page 3 of Attachment 2 will be filled out as follows:

Date/Time	Tmin	Ptot	Psat	Pair	Initials
Today/0000	N/A	N/A	N/A	10.41	SI

COMMENTS:

_____ **SAT**

_____ **UNSAT**

STEP 3:

Step 2 of Attachment 2:

2. Record the Date and Time in the CTMT Pressure Data Table.

STANDARD:

a) Records the current Date and Time on Line 2 of CTMT PRESSURE DATA TABLE of attachment 2.

EVALUATOR NOTES:

Page 3 of Attachment 2 will be filled out as follows:

Date/Time	Tmin	Ptot	Psat	Pair	Initials
Today/0000	N/A	N/A	N/A	10.41	SI
Today/Now					

COMMENTS:

_____ **SAT**

_____ **UNSAT**

STEP 4:

Step 3 of Attachment 2:

3. Obtain the minimum CTMT air temperature from Unit 1 PCS Containment Temperatures (Elev) and record in the Tmin column in the CTMT Pressure Data Table.

STANDARD:

a) Utilizing the PCS Screen Shot for CTMT Air Temperatures – chooses the reading of 88 °F
This is a critical step.

EVALUATOR NOTES:

This PCS Screen Shot is located at the end of this JPM.

Page 3 of Attachment 2 will be filled out as follows:

Date/Time	Tmin	Ptot	Psat	Pair	Initials
Today/0000	N/A	N/A	N/A	10.41	SI
Today/Now	88 °F				

COMMENTS:

_____ **SAT**

_____ **UNSAT**

STEP 5:

Step 4 of Attachment 2:

4. Obtain Ptot from one of the following sources and record in the Ptot column in the CTMT Pressure Data Table.
   - The highest of 1-CV-PI-101A or 1-CV-PI-101B
   - The highest of Unit 1 PCS points P1LM002A, P1LM003A, P1LM001A, or P1LM004A

STANDARD:

a) Utilizing the highest (in accordance with note prior to step 1) of either 1-CV-PI-101A/B or PCS points P1LM002A, P1LM003A, P1LM001A, or P1LM004A.
This is a critical step.

EVALUATOR NOTES:

This PCS Screen Shot is located at the end of this JPM.

Page 3 of Attachment 2 will be filled out as follows (using PCS data):

Date/Time	Tmin	Ptot	Psat	Pair	Initials
Today/0000	N/A	N/A	N/A	10.41	SI
Today/Now	88 °F	11.29 (PCS)			

Answer:
- If CV-PI-101A/B chosen – highest reading should be 11.27 psia [range 11.20 – 11.30]
- If PCS points are utilized – highest reading should be 11.29 psia

COMMENTS:

STEP 6:

Step 5 of Attachment 2

5. Use Steam Tables to determine Psat corresponding to the minimum CTMT temperature obtained in Step 3 and record in the Psat column in the CTMT Pressure Data Table.

STANDARD:

a) Utilizing minimum temperature obtained in Step 3, determines Psat and records on Line 2 of CTMT PRESSURE DATA TABLE of Attachment 2-Psat data field.
This is a critical step.

EVALUATOR NOTES:

- Should determine Psat to be 0.65551 [0.65 – 0.66]

Page 3 of Attachment 2 will be filled out as follows (using PCS data):

Date/Time	Tmin	Ptot	Psat	Pair	Initials
Today/0000	N/A	N/A	N/A	10.41	SI
Today/Now	88 °F	11.29 (PCS)	0.65551		

Answer: 0.65551 [Acceptable Range 0.65 – 0.66]

COMMENTS:

_____ **SAT**

_____ **UNSAT**

STEP 7:

Step 6 of Attachment 2:

6. Calculate Pair by subtracting Psat from Ptot and record in the Pair column in the CTMT Pressure Data Table.

STANDARD:

a) Determines Pair by subtracting Psat from Ptot.

EVALUATOR NOTES:

Page 3 of Attachment 2 will be filled out as follows (using PCS data):

Date/Time	Tmin	Ptot	Psat	Pair	Initials
Today/0000	N/A	N/A	N/A	10.41	SI
Today/Now	88 °F	11.29 (PCS)	0.65551	10.63449	SI

Answer:

- If CV-PI-101A/B Used – should calculate Pair to be 10.61449 [range 10.54 – 10.65]
- If PCS used – should calculate Pair to be 10.63449 [range 10.63 – 10.64]

COMMENTS:

_____ **SAT**

_____ **UNSAT**

STEP 8:

Note prior to step 7:

- A more precise measurement of Pair may be obtained by performing the following steps with STA or System Engineering assistance.

STANDARD:

(a) Acknowledges the notes

EVALUATOR NOTES:

- If asked, it is NOT desired to perform this calculation

COMMENTS:

_____ **SAT**

_____ **UNSAT**

STEP 9: Step 7 of Attachment 2: 7. IF a more precise measurement of Pair is required, THEN perform the remainder of this attachment with STA or Engineering assistance. Otherwise, enter N/A for Steps 8 through 12, AND GO TO Step 13. STANDARD: a) Enters N/A on steps 8 through 12 and goes to step 12. EVALUATOR NOTES: • If asked, it is NOT desired to perform this calculation COMMENTS:	_____ **SAT** _____ **UNSAT**
STEP 10: Step 13 of Attachment 2 13. Verify CTMT Air Partial Pressure is within Tech Spec 3.8-1 limits. STANDARD: **a) Obtains a copy of Tech Specs and refers to table 3.8-1 and determines that partial pressure is NOT within acceptable Tech Spec limits.** **This is a critical step.** EVALUATOR NOTES: • Trainee to obtain CW temperature from PCS Screen Shots located at the end of this JPM – CW inlet temp will be 94˚F. • If report is given that partial pressure is outside of Table 3.8-1 limits, ask the trainee to determine and report applicable LCO limits and actions required. o Should determine 1 hour clock to restore to within limits or be in HSD in next 6 hours and CSD in following 30 hours. COMMENTS:	

STEP 11: Reports task is complete. **STANDARD:** **a) Verbal or written status report that the task is complete and that Partial Pressure is outside the limits of TS Table 3.8-1. This is a Critical Step if not already performed.** **EVALUATOR'S NOTE:** • Acknowledge the completion of the task. **COMMENTS:**	_____ **SAT** _____ **UNSAT**

STOP TIME:

Operator Directions Handout
(TO BE READ TO APPLICANT BY EXAMINER)

Task

- Task may be PERFORMED in the simulator or classroom.
- Correctly determine partial pressure in accordance with ARP-1B-A6 and verifies Tech Spec compliance.

Directions

The evaluator will explain the initial conditions of the task to be performed and will provide the initiating cue. Ensure you indicate to the evaluator when you understand your assigned task.

Initial Conditions:

- I am the Nuclear Shift Manager. I have assigned you to perform Attachment 2 of Annunciator Response Procedure (ARP) 1B-A6, Containment Pressure -0.1 PSI Channel 1, to calculate Containment Partial Pressure and Technical Specification Compliance.

- Approximately 2 hours ago Unit 1 was at 100% power when the operating chilled water system chiller tripped. As a result, annunciators 1B-A6 (CTMT PART PRESS -0.1 PSI CH 1) and 1B-B6 (CTMT PART PRESS -0.1 PSI CH 2) were received.
- The operating team has implemented ARP-1B-A6 up to the point of implementing Attachment 2.
- Maintenance has determined that the chiller will not be returned to service until tomorrow.

Applicable Plant conditions are located below and as attachments to this JPM:

Previous PT-36.00 data:

Date:	Today
Time:	0000
CTMT Air Partial Pressure:	10.41 psia

Initiating Cues:

- Here is a copy of Attachment 2 of Annunciator Response Procedure (ARP) 1B-A6, Containment Pressure -0.1 PSI Channel 1. I need you to perform Attachment 2 of Annunciator Response Procedure (ARP) 1B-A6, Containment Pressure -0.1 PSI Channel 1, to calculate Containment Partial Pressure and Technical Specification Compliance.

- When you have completed this task please inform me of the results.

Operator Directions Handout
(TO BE GIVEN TO APPLICANT)

Initial Conditions:

- I am the Nuclear Shift Manager. I have assigned you to perform Attachment 2 of Annunciator Response Procedure (ARP) 1B-A6, Containment Pressure -0.1 PSI Channel 1, to calculate Containment Partial Pressure and Technical Specification Compliance.

- Approximately 2 hours ago Unit 1 was at 100% power when the operating chilled water system chiller tripped. As a result, annunciators 1B-A6 (CTMT PART PRESS -0.1 PSI CH 1) and 1B-B6 (CTMT PART PRESS -0.1 PSI CH 2) were received.
- The operating team has implemented ARP-1B-A6 up to the point of implementing Attachment 2.
- Maintenance has determined that the chiller will not be returned to service until tomorrow.

Applicable Plant conditions are located below and as attachments to this JPM:

Previous PT-36.00 data:

Date:	Today
Time:	0000
CTMT Air Partial Pressure:	10.41 psia

Initiating Cues:

- Here is a copy of Attachment 2 of Annunciator Response Procedure (ARP) 1B-A6, Containment Pressure -0.1 PSI Channel 1. I need you to perform Attachment 2 of Annunciator Response Procedure (ARP) 1B-A6, Containment Pressure -0.1 PSI Channel 1, to calculate Containment Partial Pressure and Technical Specification Compliance.

- When you have completed this task please inform me of the results.

NOTE:
- This calculation is required at a minimum of every 12 hours to satisfy Tech Spec 3.8. However, if CTMT cooling conditions change adversely, this calculation should be performed more frequently, at the discretion of Shift Supervision.
- Performance of this calculation immediately after loss of CTMT cooling is not required, however, it must be performed within 12 hours of the last satisfactory surveillance. (typically within 12 hours of the last valid 1-PT-36 log reading)
- Air partial pressure (P_{air}) is obtained from the formula $P_{tot} - P_{sat} = P_{air}$
- P_{tot} is CTMT pressure from one of the following:
  - The highest of 1-CV-PI-101A or 1-CV-PI-101B
  - The highest of Unit 1 PCS points P1LM002A, P1LM003A, P1LM001A, or P1LM004A
- P_{sat} is the saturation pressure of the lowest CTMT temperature obtained in Step 3 (using steam tables). This conservatively assumes that the lowest CTMT ambient temperature is at the CTMT saturation temperature. A more precise determination of P_{sat} is allowed in Step 7. This alternative relies on measurement of relative humidity, since the actual saturation temperature is a function of both dry-bulb temperature and relative humidity.

1. ___ Record the Date, Time, and CTMT Air Partial Pressure in the P_{air} column from the last valid 1-PT-36 log reading in the <u>first</u> <u>row</u> of the CTMT Pressure Data Table at the end of this attachment.

2. ___ Record the current Date and Time in the CTMT Pressure Data Table in the next available row.

3. ___ Obtain and record the lowest CTMT air temperature from Unit 1 PCS Containment Temperatures (Elev) and record in the T_{min} column in the CTMT Pressure Data Table.

4. ___ Obtain P_{tot} from one of the following sources and record in the P_{tot} column in the CTMT Pressure Data Table.

   ☐ • The highest of 1-CV-PI-101A or 1-CV-PI-101B

   ☐ • The highest of Unit 1 PCS points P1LM002A, P1LM003A, P1LM001A, or P1LM004A

5. ___ Use Steam Tables to determine P_{sat} corresponding to the lowest CTMT temperature obtained in Step 3 and record in the P_{sat} column in the CTMT Pressure Data Table.

6. ___ Calculate P_{air} by subtracting P_{sat} from P_{tot} and record in the P_{air} column in the CTMT Pressure Data Table.

NOTE: A more precise measurement of P_{air} may be obtained by performing the following steps with STA or System Engineering assistance.

7. ___ IF a more precise measurement of P_{air} is required, THEN perform the remainder of this attachment with STA or System Engineering assistance. Otherwise, enter N/A for Steps 8 through 12, AND GO TO Step 13.

8. ___ Obtain an instrument for measuring relative humidity or dewpoint.

9. ___ Request HP assistance.

10. ___ Obtain a sample of the CTMT atmosphere from the CTMT Particulate and Gas Radiation monitor or from CTMT entry.

11. ___ Determine the relative humidity or dewpoint of the CTMT atmosphere sample.

12. ___ Determine P_{sat} IAW the following:

    ☐ a) IF a measured value for CTMT air dewpoint (t_d) is obtained, THEN use Steam Tables to determine P_{sat} corresponding to t_d.

    ☐ b) IF measured values for CTMT relative humidity (RH) and temperature (dry-bulb) are obtained, THEN use Steam Tables to determine P_{sat} corresponding to the dry-bulb temperature.

    - Calculate P_{sat} = RH x (P_{sat} corresponding to the dry-bulb temperature)

    ☐ c) Calculate P_{air} by subtracting P_{sat} from P_{tot}.

13. ___ Verify current CTMT Air Partial Pressure (P_{air}) is within Tech Spec 3.8-1 limits.

14. ___ Perform calculations and log results every four hours in the CTMT Pressure Data Table starting at Step 2 of this attachment.

15. ___ WHEN Chiller has been restarted, THEN RETURN TO procedure Step 10.

NOTE: P_{air} must be calculated every 12 hours to satisfy compliance with Tech Spec 3.8.

CTMT PRESSURE DATA TABLE

Date/Time	T_{min}	P_{tot}	P_{sat}	P_{air}	Initials

PARTIAL AIR PRESS
PSIA
PARTIAL AIR PRESS
PSIA
CTMT PARTL PRESS
PI-CV-101 (A) 2
CH 1
PI-CV-101 (B) 2
CH 2

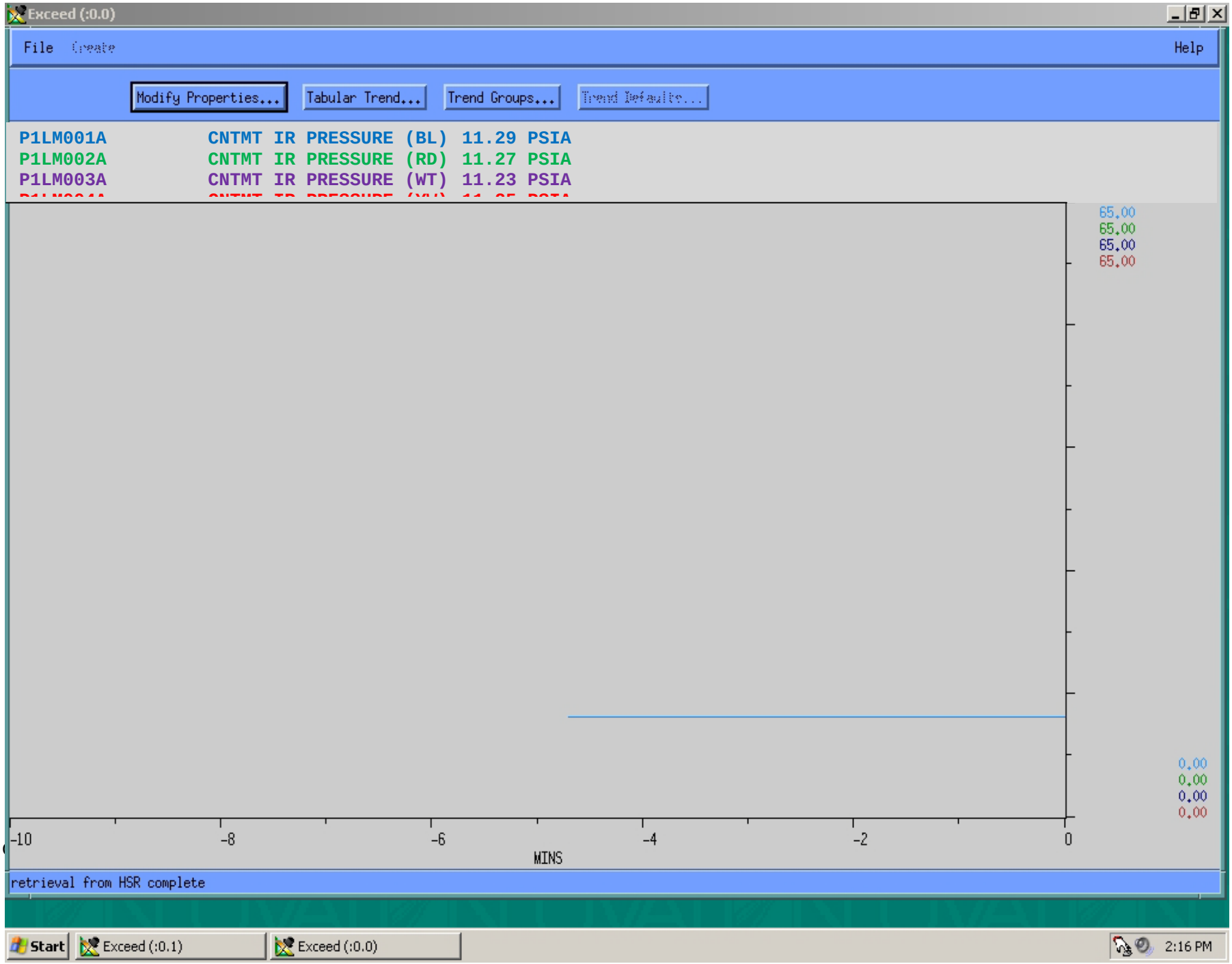
Exceed (:0.0)
File Create Help
Modify Properties...
Tabular Trend...
Trend Groups...
Trend Defaults...
P1LM001A CNTMT IR PRESSURE (BL) 11.29 PSIA
P1LM002A CNTMT IR PRESSURE (RD) 11.27 PSIA
P1LM003A CNTMT IR PRESSURE (WT) 11.23 PSIA
65.00
65.00
65.00
65.00
0.00
0.00
0.00
0.00
-10
-8
-6
-4
-2
0
MINS
retrieval from HSR complete
Start
Exceed (:0.1)
Exceed (:0.0)
2:16 PM

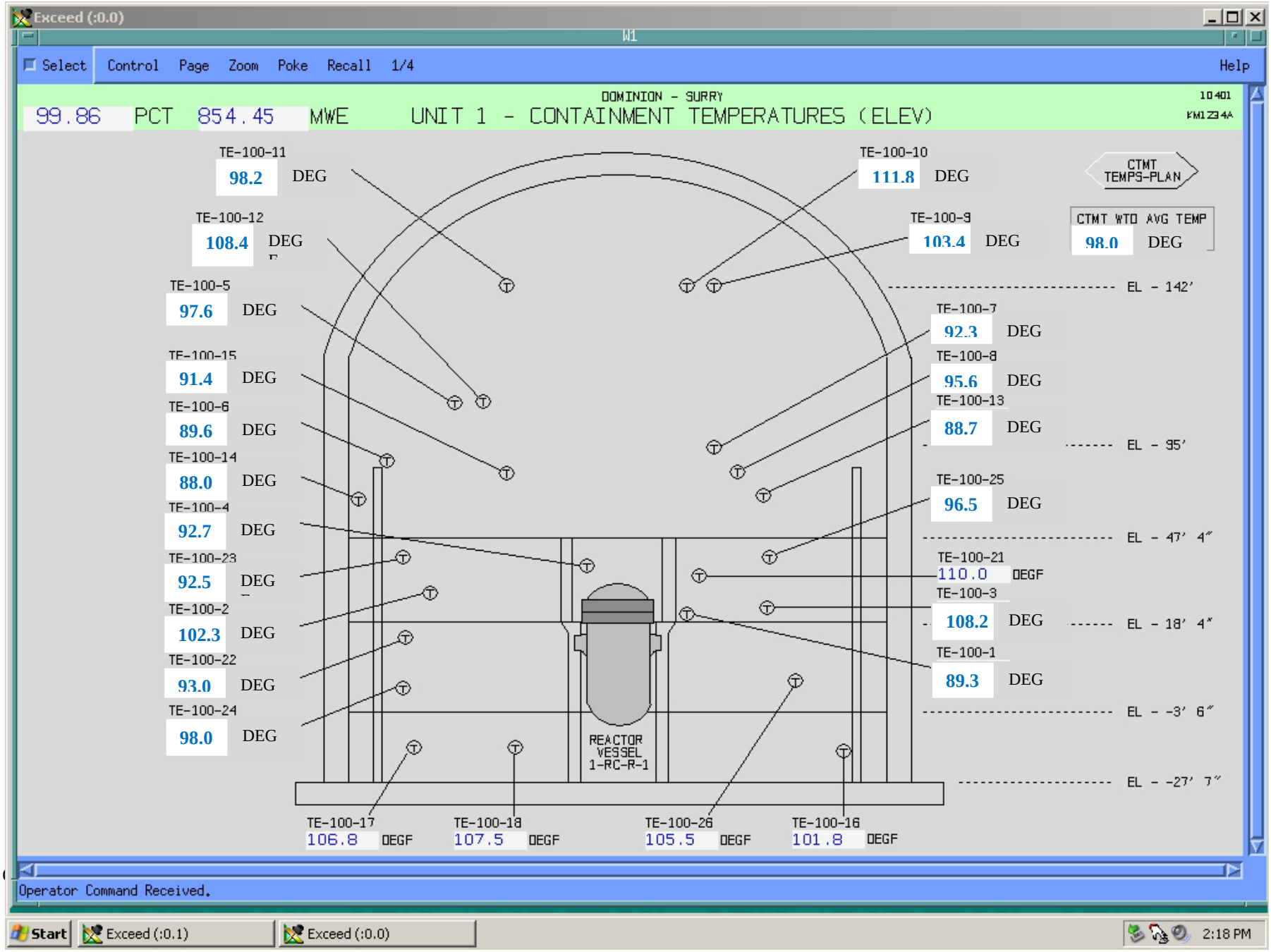
Exceed (:0.0)
Select Control Page Zoom Poke Recall 1/4 Help
DOMINION - SURRY
99.86 PCT 854.45 MWE UNIT 1 - CONTAINMENT TEMPERATURES (ELEV)
10401
KM1Z34A
CTMT TEMPS-PLAN
CTMT WTD AVG TEMP 98.0 DEG
TE-100-11 98.2 DEG
TE-100-10 111.8 DEG
TE-100-12 108.4 DEG
TE-100-9 103.4 DEG
EL - 142'
TE-100-5 97.6 DEG
TE-100-7 92.3 DEG
TE-100-15 91.4 DEG
TE-100-8 95.6 DEG
TE-100-6 89.6 DEG
TE-100-13 88.7 DEG
EL - 95'
TE-100-14 88.0 DEG
TE-100-25 96.5 DEG
TE-100-4 92.7 DEG
EL - 47' 4"
TE-100-23 92.5 DEG
TE-100-21 110.0 DEGF
TE-100-2 102.3 DEG
TE-100-3 108.2 DEG
EL - 18' 4"
TE-100-22 93.0 DEG
TE-100-1 89.3 DEG
TE-100-24 98.0 DEG
EL - -3' 6"
REACTOR VESSEL 1-RC-R-1
EL - -27' 7"
TE-100-17 106.8 DEGF
TE-100-18 107.5 DEGF
TE-100-26 105.5 DEGF
TE-100-16 101.8 DEGF
Operator Command Received.
Start Exceed (:0.1) Exceed (:0.0) 2:18 PM

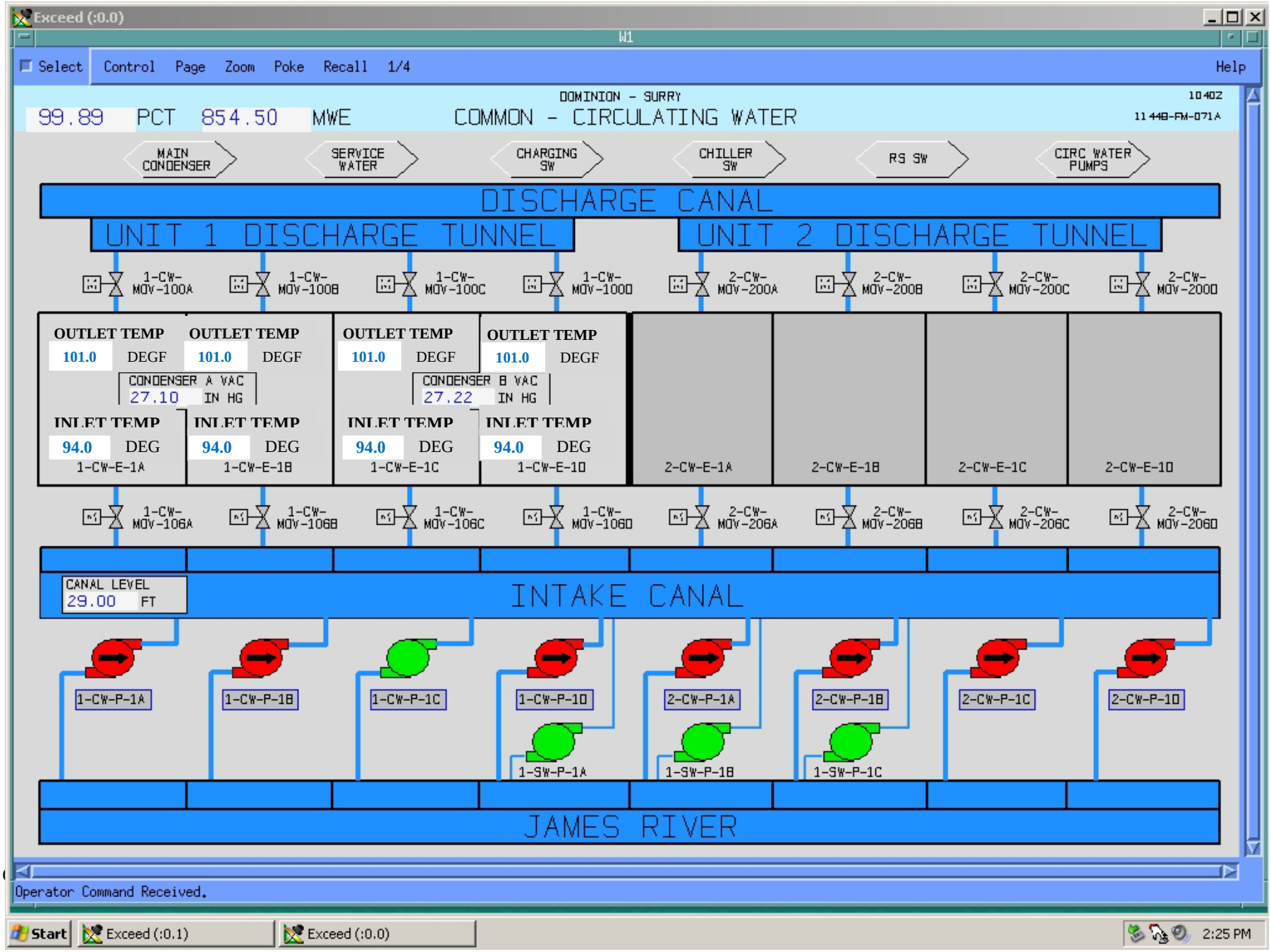
Exceed (:0.0)
W1
Select Control Page Zoom Poke Recall 1/4 Help
DOMINION - SURRY
10402
99.89 PCT 854.50 MWE
COMMON - CIRCULATING WATER
11448-FM-071A
MAIN CONDENSER
SERVICE WATER
CHARGING SW
CHILLER SW
RS SW
CIRC WATER PUMPS
DISCHARGE CANAL
UNIT 1 DISCHARGE TUNNEL
UNIT 2 DISCHARGE TUNNEL
1-CW-MOV-100A
1-CW-MOV-100B
1-CW-MOV-100C
1-CW-MOV-100D
2-CW-MOV-200A
2-CW-MOV-200B
2-CW-MOV-200C
2-CW-MOV-200D
OUTLET TEMP 101.0 DEGF
OUTLET TEMP 101.0 DEGF
OUTLET TEMP 101.0 DEGF
OUTLET TEMP 101.0 DEGF
CONDENSER A VAC 27.10 IN HG
CONDENSER B VAC 27.22 IN HG
INLET TEMP 94.0 DEG
INLET TEMP 94.0 DEG
INLET TEMP 94.0 DEG
INLET TEMP 94.0 DEG
1-CW-E-1A
1-CW-E-1B
1-CW-E-1C
1-CW-E-1D
2-CW-E-1A
2-CW-E-1B
2-CW-E-1C
2-CW-E-1D
1-CW-MOV-106A
1-CW-MOV-106B
1-CW-MOV-106C
1-CW-MOV-106D
2-CW-MOV-206A
2-CW-MOV-206B
2-CW-MOV-206C
2-CW-MOV-206D
CANAL LEVEL 29.00 FT
INTAKE CANAL
1-CW-P-1A
1-CW-P-1B
1-CW-P-1C
1-CW-P-1D
2-CW-P-1A
2-CW-P-1B
2-CW-P-1C
2-CW-P-1D
1-SW-P-1A
1-SW-P-1B
1-SW-P-1C
JAMES RIVER
Operator Command Received.
Start
Exceed (:0.1)
Exceed (:0.0)
2:25 PM

U.S. Nuclear Regulatory Commission
Surry Power Station

SR10301
Administrative Job Performance Measure 2.1.37

Applicant_____ Start Time_____

Examiner_____

Date _____ Stop Time_____

Title

COMPLETE A REACTIVITY SUMMARY SHEET

K/A: G2.1.37 – Knowledge of procedures, guidelines, or limitations associated with reactivity management. (4.3/4.6)

Applicability	**Est Completion Time**	**Actual Time**
RO	45 Minutes	_____

Conditions

- Task is to be PERFORMED in the SIMULATOR or CLASSROOM.
- Performance of 1-OP-RX-010, Documentation of Reactivity Parameters during Power Operations, is required.

Standards

- Completes the calculations, within tolerances, that allow for completion of the Reactivity Summary Sheet located in 1-OP-RX-010, Documentation of Reactivity Parameters during Power Operations.

Initiating Cues

- Given simulated plant conditions, perform 1-OP-RX-010, Documentation of Reactivity Parameters during Power Operations and complete Attachment 2 of 1-OP-RX-010, Reactivity Summary Sheet.

Initial Conditions

- It is mid shift on Saturday. Unit 1 power is 100 percent.
- I am the Nuclear Shift Manager. I have assigned you to perform 1-OP-RX-010, Documentation of Reactivity Parameters during Power Operations and complete Attachment 2 of 1-OP-RX-010, Reactivity Summary Sheet.

- The following is reactivity information was supplied by the Reactor Engineer today:
  - Core burnup: 13090 MWD/MTU
  - Isothermal temperature coefficient: -26.48 pcm/°F
  - Target delta flux: -0.5%
- The following are the Unit conditions:
  - Reactor power: 100%
  - RCS boron concentration: 468 ppm
  - Control Bank 'D' is at 228 steps
  - 'A' BAST is in-service on Unit 1 with a boron concentration of 13952 ppm.
  - A power reduction has not occurred and is not planned.

- Here is a copy of 1-OP-RX-010, Documentation of Reactivity Parameters during Power Operations. I need you to perform 1-OP-RX-010, Documentation of Reactivity Parameters during Power Operations and complete Attachment 2 of 1-OP-RX-010, Reactivity Summary Sheet.

- When you are ready to have your work independently verified, please inform me, as this will end the JPM.

Terminating Cues

- Reactivity Summary Sheet calculations performed and the candidate is ready for their work to be independently verified.

Procedures

- 1-OP-RX-010, Documentation of Reactivity Parameters during Power Operations (Revision 11)

Tools and Equipment

- Calculator

Safety Considerations

- None

Notes

Performance Checklist

Notes to the Evaluator.

- Task critical elements are bolded and noted by the words "Critical Step" at the end of the step.
- **START TIME:**

STEP 1: 3.0 INITIAL CONDITIONS 3.1 Unit is operating at greater than 50% power (see P&L 4.1). 4.0 PRECAUTIONS AND LIMITATIONS 4.1 The Unit should be at steady state conditions, i.e., constant power (+/- 5%) for 48 hours. If the unit is not stable or not above 50% power, then this procedure should be carried daily on the PT schedule until the Unit is at equilibrium condition. 4.2 This procedure should be performed every two weeks as directed by the Operations PT schedule. If RCS boron concentration is less than 200 ppm, this procedure should be done weekly. **STANDARD:** (a) Acknowledges Initial Conditions and Precautions and Limitations. **EVALUATOR'S NOTE:** • None **COMMENTS:**	_____ **SAT** _____ **UNSAT**
STEP 2: Note prior to Step 5.1.1:	_____ **SAT**

• The items listed in Step 5.1.1 will be updated every 2 weeks by Reactor Engineering. **STANDARD:** (a) Acknowledges the Note. **EVALUATOR'S NOTE:** • None **COMMENTS:**	_____ **UNSAT**

STEP 3: Step 5.1.1 5.1.1 The following items have been provided by Reactor Engineering, and will be used for calculations: • Core burn-up • Isothermal Temperature Coefficient (ITC) **STANDARD:** (a) Acknowledges that this information was provided by Reactor Engineering in the initial conditions. **EVALUATOR'S NOTE**: • None. **COMMENTS:**	_____ **SAT** _____ **UNSAT**
STEP 4: Notes prior to Step 5.2.1: • The following guidelines should be used when performing calculations: o Do no round numbers until the final value. Then round Boric Acid calculations to the nearest tenth of a gallon and round PG calculations to the nearest gallon. Review Attachment 4 before performing calculations. o Use the last known reported boron from Chemistry. It is not necessary to interpolate or obtain a sample if one has not been taken for the day. • The following form is located on the Operations network drive in S:/Surry Power Station/3/Data1/OPS/Forms/Reactivity • Reactivity1, Unit 1 Form • Once calculated, this procedure will remain in effect for two weeks if RCS boron concentration is greater than or equal to 200 ppm. If RCS boron concentration is less than 200 ppm, this calculation should be performed weekly.	_____ **SAT** _____ **UNSAT**

• The Unit 1 Reactor Operator will have the results of this procedure verified by either the Shift Technical Advisor or another licensed Reactor Operator. **STANDARD:** (a) Acknowledges the Notes. **EVALUATOR'S NOTE:** • None **COMMENTS:**	

STEP 5: Step 5.2.1 5.2.1 Perform Attachment 1 to calculate reactivity parameters. **STANDARD:** (a) Proceeds to Attachment 1 to commence reactivity calculations. **EVALUATOR'S NOTE**: • None. **COMMENTS:**	_____ **SAT** _____ **UNSAT**
STEP 6: Note prior to Step 1 of Attachment 1: • Unless a specific value is given, the most recent Core Burn-up value from the Reactor Engineers should be used. This value is listed on the bench board. Do not interpolate for daily burn-up. **STANDARD:** (a) Acknowledges the Note. **EVALUATOR'S NOTE:** • None **COMMENTS:**	_____ **SAT** _____ **UNSAT**

STEP 7 Attachment 1, Step 1: 1. Using data from Reactor Engineering, the Curve Book, and Chemistry, determine the following parameters: a. Core Burn-up: _____ (MWD/MTU) b. ITC: _____ (PCM/°F) c. Differential Boron Worth (DBW): _____ (PCM/PPM) d. Boron Concentration of in-service BAST (Cb BAST): _____ppm **STANDARD:** Completes Step 1 as indicated below: 1. Using data from Reactor Engineering, the Curve Book, and Chemistry, determine the following parameters: a. Core Burn-up: **13090** (MWD/MTU) b. ITC: **-26.48** (PCM/°F) c. Differential Boron Worth (DBW): **-8.30** (PCM/PPM) d. Boron Concentration of in-service BAST (Cb BAST): **13952** ppm **EVALUATOR'S NOTE**: a. Core Burn-up was provided as an initial condition. b. ITC was provided as an initial condition. c. Is read from a graph in DRP-0003, Curve Book. The curve is located at Section 27 (page 53) of DRP-0003. **Answer: -8.30 pcm/ppm** **ACCEPTABLE RANGE: [-8.28 to -8.33]**	_____ **SAT** _____ **UNSAT**

d. BAST Boron Concentration was provided as an initial condition. **COMMENTS:**	

STEP 8:

Attachment 1, Step 2:

2. Calculate the amount of boron to make a +1 ppm change.

-50813 x LN(1 + 1 / (Current Boron – Step 1d))

-50813 x LN(1 + 1 / (____– ____)) = _____ gal (Reactivity Summary Line 7)

_____ **SAT**

_____ **UNSAT**

STANDARD:

Completes Step 2 as indicated below:

2. Calculate the amount of boron to make a +1 ppm change.

a. -50813 x LN(1 + 1 / (468 – 13952))

b. -50813 x LN(1 + 1 / (-13484))

c. -50813 x LN(1 + (-0.000074162) [may round to -0.00007]

d. -50813 x LN(0.999925838) [based on previous rounding 0.99993]

e. -50813 x -0.000074165 [based on previous rounding -0.00007]

f. 3.768 gals [based on previous rounding 3.55 gals]

g. **Answer: 3.8 gallons [acceptable range: 3.6 – 3.8 gallons]**
This is a critical step.

EVALUATOR'S NOTE:

- Candidate may transfer this value to Attachment 2 (Reactivity Summary Sheet) line #7 at this time (or may wait until all calculations are complete).

COMMENTS:

STEP 9: Note prior to Step 3 of Attachment 1: • When RCS Boron Concentration is less than 12 ppm, the equation in Step 3 will yield invalid results. By decreasing the assumed charging line Boron concentration at low RCS Boron Concentration, a value of 35221 gallons of dilution is obtained. **STANDARD:** (a) Acknowledges the Note. **EVALUATOR'S NOTE:** • None **COMMENTS:**	_____ **SAT** _____ **UNSAT**

STEP 10: Attachment 1, Step 3: 3. IF RCS Boron concentration is greater than or equal to 12 ppm, THEN calculate the amount of dilution to make a -1 ppm change in accordance with the following. Otherwise, enter N/A -50813 x LN(1 - 1 / (Current Boron – 10)) -50813 x LN(1 - 1 / (_____– 10)) = _____ gal (Reactivity Summary Line 8) **STANDARD:** Completes Step 3 as indicated below: 3. Calculate the amount of boron to make a +1 ppm change. a. -50813 x LN(1 - 1 / (468 – 10)) b. -50813 x LN(1 - 1 / (458)) c. -50813 x LN(1 – (0.002183406)) [may round to 0.00218] d. -50813 x LN(0.99781659) [based on previous rounding 0.99782] e. -50813 x -0.002185797 [based on previous rounding -0.00218] f. 111.07 gals [based on previous rounding 110.77 gals] g. **Answer: 111 gallons [acceptable range: 110.7-111.1 gallons]** **This is a critical step.** **EVALUATOR'S NOTE:** • Candidate may transfer this value to Attachment 2 (Reactivity Summary Sheet) line #8 at this time (or may wait until all calculations are complete). **COMMENTS:**	_____ **SAT** _____ **UNSAT**

STEP 11: Attachment 1, Step 4: 4. IF RCS Boron concentration is less than or equal to 12 ppm, THEN the amount of dilution to make a -1 ppm change is calculated by the following. Otherwise, enter N/A -50813 x LN(1 – (1 / 2)) = 35221 gal (Reactivity Summary Line 8) **STANDARD:** 4. Marks Step as Not Applicable (N/A). **EVALUATOR'S NOTE:** • None. **COMMENTS:**	_____ **SAT** _____ **UNSAT**
STEP 12: Attachment 1, Step 5: 5. Calculate the boron concentration change to cause a 1 °F temperature change. _____ / _____ = _____ ppm / °F (ITC, Step 1b) (DBW, Step 1c) **STANDARD:** Completes Step 5 as indicated below: 5. Calculate the boron concentration change to cause a 1 °F temperature change. -26.48 / -8.3 = 3.190361 ppm / °F (ITC, Step 1b) (DBW, Step 1c)	_____ **SAT** _____ **UNSAT**

a. ITC was provided as an initial condition. b. DBW was read from a graph in DRP-0003, Curve Book. c. **Answer: 3.19 ppm/°F** **ACCEPTABLE RANGE: [3.17 to 3.20]** **This is a critical step.** **EVALUATOR'S NOTE:** • None **COMMENTS:**	

STEP 13: Attachment 1, Step 6: 6. Calculate the amount of boron to make a -1 °F Tave change. -50813 x LN(1 + Step 5 / (Current Boron – Step 1d)) -50813 x LN(1 + _____ / (_____– _____)) = _____ gal (Reactivity Summary Line 4) **STANDARD:** Completes Step 6 as indicated below: 6. Calculate the amount of boron to make a +1 ppm change. a. -50813 x LN(1 + 3.19 / (468 – 13952)) b. -50813 x LN(1 + 3.19 / (-13484)) c. -50813 x LN(1 + (-0.000236577) [may round to -0.00024] d. -50813 x LN(0.999763423) [based on previous rounding 0.99976] e. -50813 x -0.000236605 [based on previous rounding -0.00024] f. 12.02 gals [based on previous rounding 12.18 gals] g. **Answer: 12.0 gallons [acceptable range: 11.7 – 12.2 gallons]** **This is a critical step.** **EVALUATOR'S NOTE:** • Candidate may transfer this value to Attachment 2 (Reactivity Summary Sheet) line #4 at this time (or may wait until all calculations are complete). • Range incorporates rounding and bounding values from previous step. **COMMENTS:**	_____ **SAT** _____ **UNSAT**

STEP 14: Notes prior to Step 7 of Attachment 1: • When RCS Boron Concentration is less than 16 ppm, the equation in Step 7 will yield invalid results. • When RCS Boron Concentration is less than 16 ppm, the amount of dilution to make a 1 °F Tave change will be greater than 50,000 gallons. **STANDARD:** (a) Acknowledges the Notes. **EVALUATOR'S NOTE:** • None **COMMENTS:**	_____ **SAT** _____ **UNSAT**

STEP 15: Attachment 1, Step 7: 7. IF RCS Boron concentration is greater than or equal to 16 ppm, THEN calculate the amount of dilution to make a +1 °F Tave change. Otherwise, enter N/A for this step and Step 5 on Attachment 2. -50813 x LN(1 – Step 5 / (Current Boron – 10)) -50813 x LN(1 - ____ / (_____– 10)) = _____ gal (Reactivity Summary Line 5) **STANDARD:** Completes Step 7 as indicated below: 7. Calculate the amount of boron to make a +1 ppm change. a. -50813 x LN(1 – 3.19 / (468 – 10)) b. -50813 x LN(1 – 3.19 / (458)) c. -50813 x LN(1 – (0.006965066)) [may round to 0.00697] d. -50813 x LN(0.993034934 [based on previous rounding 0.99303] e. -50813 x -0.006986435 [based on previous rounding -0.00699] f. 355.1 gals [based on previous rounding 355.4 gals] g. **Answer: 355 gallons [acceptable range 353 – 357]** **This is a critical step.** **EVALUATOR'S NOTE:** • Candidate may transfer this value to Attachment 2 (Reactivity Summary Sheet) line #5 at this time (or may wait until all calculations are complete). • Range incorporates rounding and bounding values from previous steps	_____ **SAT** _____ **UNSAT**

COMMENTS:	

STEP 16: Notes prior to Step 8 of Attachment 1: • If the value of ITC is between rod steps listed in the Curve Book, select the rod height with the highest rod worth. Interpolation to an unlisted rod height is not necessary. **STANDARD:** (a) Acknowledges the Notes. **EVALUATOR'S NOTE:** • None **COMMENTS:**	_____ **SAT** _____ **UNSAT**

STEP 17 Attachment 1, Step 8: 8. Determine the number of rod steps from the fully withdrawn position that equates to a 1 °F Tave change by performing the following calculations: a. Current Rod Height: _____ Steps b. Value of ITC: (+)_____ pcm (record as + value) c. Rod height associated with b: _____ Steps d. Subtract a - c: _____Steps (Reactivity Summary line 6) **STANDARD:** Completes Step 8 as indicated below: 8. Determine the number of rod steps from the fully withdrawn position that equates to a 1 °F Tave change by performing the following calculations: a. Current Rod Height: ___228___ Steps b. Value of ITC: (+)_26.48__ pcm (record as + value) c. Rod height associated with b: ___217___ Steps d. Subtract a - c: ___11_____Steps **EVALUATOR'S NOTE**: a. Current Rod Height was provided as an initial condition. b. ITC was provided as an initial condition. c. Is read from a table in DRP-0003, Curve Book. The curve is located at Section 29 (page 62) of DRP-0003. Answer: 217 steps [217 to 218] d. 228 – 217 = 11 Steps [11 – 10 Steps]. **Answer: 11 Steps [10 – 11 steps]**	_____ **SAT** _____ **UNSAT**

This is a critical step. Candidate may transfer this value to Attachment 2 (Reactivity Summary Sheet) line #6 at this time (or may wait until all calculations are complete). The candidate may sign step 5.2.1 as complete at this time. **COMMENTS:**	

STEP 18

Step 5.2.2 Transfer appropriate values to Attachment 2, Reactivity Summary Sheet.

_____ **SAT**

_____ **UNSAT**

STANDARD:

Transfer appropriate values to Attachment 2, Reactivity Summary Sheet, as indicated below:

1. Reactor Operators will discuss Items 4 – 8 with the Unit SRO following turnover.
2. See Subsection 5.2 for directions to complete Items 4 through 8.
3. Reactor Power 100 %
4. Boron for 1 °F decrease **11.7 – 12.2** GAL BA
5. Dilution for 1 °F increase **353 – 357** GAL PG
6. Rod steps for 1 °F change **10 - 11** Steps
7. Gallons of boric acid for 1 ppm change **3.6 – 3.8** GAL BA
8. Gallons of PG for 1 ppm change **111** GAL PG

EVALUATOR'S NOTE:

This is a summary sheet for easy reference. Critical Steps (4 – 8) are bolded and the details on the calculation are provided earlier in the JPM.

The candidate may sign step 5.2.2 as complete and 5.2.3 as not applicable at this time.

COMMENTS:

STEP 5: Reports completion of 1-OP-RX-010 and that the calculations are ready to be independently verified. **STANDARD:** (a) Verbal or written status report that a 1-OP-RX-010 is ready to be independently verified. **EVALUATOR'S NOTE:** • Acknowledge the completion of the task. **COMMENTS:**	_____ **SAT** _____ **UNSAT**

STOP TIME:

Operator Directions Handout
(TO BE READ TO APPLICANT BY EXAMINER)

Task

- Task is to be PERFORMED in the SIMULATOR or CLASSROOM.
- Performance of 1-OP-RX-010, Documentation of Reactivity Parameters during Power Operations, is required.

Directions

The evaluator will explain the initial conditions of the task to be performed and will provide the initiating cue. Ensure you indicate to the evaluator when you understand your assigned task.

Initial Conditions

- It is mid shift on Saturday. Unit 1 power is 100 percent.
- I am the Nuclear Shift Manager. I have assigned you to perform 1-OP-RX-010, Documentation of Reactivity Parameters during Power Operations and complete Attachment 2 of 1-OP-RX-010, Reactivity Summary Sheet.

- The following is reactivity information was supplied by the Reactor Engineer today:
  - Core burnup: 13090 MWD/MTU
  - Isothermal temperature coefficient: -26.48 pcm/°F
  - Target delta flux: -0.5%

- The following are the Unit conditions:
  - Reactor power: 100%
  - RCS boron concentration: 468 ppm
  - Control Bank 'D' is at 228 steps
  - 'A' BAST is in-service on Unit 1 with a boron concentration of 13952 ppm.
  - A power reduction has not occurred and is not planned.

Initiating Cues:

- Here is a copy of 1-OP-RX-010, Documentation of Reactivity Parameters during Power Operations. I need you to perform 1-OP-RX-010, Documentation of Reactivity Parameters during Power Operations and complete Attachment 2 of 1-OP-RX-010, Reactivity Summary Sheet.

- When you are ready to have your work independently verified, please inform me, as this will end the JPM.

Operator Directions Handout
(TO BE GIVEN TO APPLICANT)

Initial Conditions

- It is mid shift on Saturday. Unit 1 power is 100 percent.
- I am the Nuclear Shift Manager. I have assigned you to perform 1-OP-RX-010, Documentation of Reactivity Parameters during Power Operations and complete Attachment 2 of 1-OP-RX-010, Reactivity Summary Sheet.

- The following is reactivity information was supplied by the Reactor Engineer today:
  - Core burnup: 13090 MWD/MTU
  - Isothermal temperature coefficient: -26.48 pcm/°F
  - Target delta flux: -0.5%

- The following are the Unit conditions:
  - Reactor power: 100%
  - RCS boron concentration: 468 ppm
  - Control Bank 'D' is at 228 steps
  - 'A' BAST is in-service on Unit 1 with a boron concentration of 13952 ppm.
  - A power reduction has not occurred and is not planned.

Initiating Cues:

- Here is a copy of 1-OP-RX-010, Documentation of Reactivity Parameters during Power Operations. I need you to perform 1-OP-RX-010, Documentation of Reactivity Parameters during Power Operations and complete Attachment 2 of 1-OP-RX-010, Reactivity Summary Sheet.

- When you are ready to have your work independently verified, please inform me, as this will end the JPM.

Dominion	PROCEDURE NO: 1-OP-RX-010
SURRY POWER STATION	REVISION NO: 11
PROCEDURE TYPE: **OPERATING PROCEDURE**	UNIT NO: 1

PROCEDURE TITLE:
DOCUMENTATION OF REACTIVITY PARAMETERS DURING POWER OPERATION

RX MGT						

REVISION SUMMARY:

Revised in response to Operations Feedback, OP FB 09-0322. Added Step 5.2.7.

UNIT ONE

PROCEDURE USED:	☐ Entirely	☐ Partially	**Note:** If used partially, note reasons in remarks.
PROBLEMS ENCOUNTERED:	☐ NO	☐ YES	**Note:** If YES, note problems in remarks.

REMARKS: _____

_____

TABLE OF CONTENTS

Section		Page
1.0	PURPOSE	3
2.0	REFERENCES	3
3.0	INITIAL CONDITIONS	4
4.0	PRECAUTIONS AND LIMITATIONS	4
5.0	INSTRUCTIONS	5
5.1	Work Preparation	5
5.2	Reactivity Calculation	6
ATTACHMENTS		
1	Calculating Reactivity Parameters	8
2	Reactivity Summary Sheet	11
3	Converting Boron Change for Ramps to Gallons of Boric Acid	12
4	Common Calculation Errors	13
5	IFBA Core Blended Flow Makeups	15

1.0 PURPOSE

1.1 To calculate and document reactivity parameters during power operation. The Unit 1 Reactor Operator will perform the calculations every other Saturday mid-shift.

2.0 REFERENCES

2.1 Source Documents

None

2.2 Technical Specifications Surry Power Station Units 1 and 2

None

2.3 Technical References

2.3.1 OP-AP-0300, Reactivity Management

2.3.2 OPAP-0005, Shift Relief and Turnover

2.4 Commitment Documents

2.4.1 CR096161, 1/2-OP-RX-010 Reactivity Calculation Requires Enhancement

Init **Verif**

3.0 INITIAL CONDITIONS

_____ 3.1 Unit 1 is operating at greater than 50% power. (See P&L 4.1)

4.0 PRECAUTIONS AND LIMITATIONS

4.1 The Unit should be at steady state conditions, i.e. constant power ($\pm$ 5%) for 48 hours. If the unit is not stable or not above 50% power, then this procedure should be carried daily on the PT schedule until the Unit is at equilibrium conditions.

4.2 This procedure should be performed every two weeks as directed by the Operations PT schedule. If RCS boron concentration is less than 200 ppm, this procedure should be performed weekly.

5.0 INSTRUCTIONS

5.1 Work Preparation

NOTE: The items listed in Step 5.1.1 will be updated approximately every 2 weeks by Reactor Engineering.

_____ 5.1.1 The following items have been provided by Reactor Engineering, and will be used for calculations:

- Core burnup
- Isothermal Temperature Coefficient (ITC)

5.2 Reactivity Calculation

NOTE: The following guidelines should be used when performing calculations.

- Do not round numbers until the final value. Then round Boric Acid calculations to the nearest tenth of a gallon and round PG calculations to the nearest gallon. Review Attachment 4 before performing calculations.
- Use the last known reported boron from Chemistry. It is not necessary to interpolate or obtain a sample if one has not been taken for the day.

NOTE: The following form is located on the Operations network drive in S:/Surry Power Station/3/Data1/OPS/Forms/Reactivity.

- Reactivity1, Unit 1 form

NOTE: Once calculated, this procedure will remain in effect for two weeks if RCS boron concentration is greater than or equal to 200 ppm. If RCS boron concentration is less than 200 ppm, this calculation should be performed weekly.

NOTE: The Unit 1 Reactor Operator will have the results of this procedure verified by either the Shift Technical Advisor or another licensed Reactor Operator.

_____ 5.2.1 Perform Attachment 1 to calculate reactivity parameters.

_____ 5.2.2 Transfer appropriate values to Attachment 2, Reactivity Summary Sheet.

_____ 5.2.3 Perform Attachment 3 to convert ppm boron to gallons of boric acid. Enter N/A if a power reduction has NOT occurred or is NOT planned.

_____ 5.2.4 Perform Attachment 5 if blended flow makeups are to be used to offset small core reactivity changes. Enter N/A if this method is NOT planned OR if core

_____ 5.2.7 Stamp the photocopy with a "COPY" stamp on the front cover.

Performed by:

Signature	Initial	Print	Date
Signature	Initial	Print	Date
Signature	Initial	Print	Date
Signature	Initial	Print	Date

(Page 1 of 3)

Attachment 1
CALCULATING REACTIVITY PARAMETERS

NOTE: Unless a specific value is given, the most recent Core Burnup value from the Reactor Engineers should be used. This value is listed on the benchboard. Do not interpolate for daily burnup.

_____ 1. Using data from Reactor Engineering, the Curve Book, and Chemistry, determine the following parameters.

a. Core Burnup: _____ (MWD/MTU)

b. ITC: _____ (PCM/°F)

c. Differential Boron Worth (DBW): _____ (PCM/PPM)
(From Boron Coefficient vs. Burnup curve)

d. Boron concentration of in-service BAST (C_B BAST)_____ ppm

_____ 2. Calculate the amount of boron to make a + 1 ppm change.

$$-50813 \times \ln\left(1 + \frac{1}{\text{Current Boron} - \text{Step 1d}}\right)$$

$$-50813 \times \ln\left(1 + \frac{1}{_____ - _____}\right) = _____ \text{ gal (Reactivity Summary Line 7)}$$

NOTE: When RCS Boron concentration is less than 12 ppm, the equation in Step 3 will yield invalid results. By decreasing the assumed charging line Boron concentration at low RCS Boron concentration, a value of 35221 gallons of dilution is obtained. **(Ref. 2.4.1)**

_____ 3. IF RCS Boron concentration is greater than or equal to 12 ppm, THEN calculate the amount of dilution to make a - 1 ppm change IAW the following. Otherwise, enter

(Page 2 of 3)

Attachment 1

CALCULATING REACTIVITY PARAMETERS

_____ 4. IF RCS Boron concentration is less than 12 ppm, THEN the amount of dilution needed to make a - 1 ppm change is calculated by the following. Otherwise, enter N/A.

$$-50813 \times \ln\left(1 - \frac{1}{2}\right) = 35221 \text{ gal (Reactivity Summary Line 8)}$$

_____ 5. Calculate the boron concentration change to cause a 1°F temperature change.

_____ ÷ _____ = _____ ppm/°F
(ITC, Step 1b) (DBW, Step 1c)

_____ 6. Calculate the amount of boron to make a -1°F Tave change.

$$-50813 \times \ln\left(1 + \frac{\text{Step 5}}{\text{Current Boron} - \text{Step 1d}}\right)$$

$$-50813 \times \ln\left(1 + \frac{_____}{_____ - _____}\right) = _____ \text{ gal (Reactivity Summary Line 4)}$$

NOTE: When RCS Boron concentration is less than 16 ppm, the equation in Step 7 will yield invalid results. **(Ref. 2.4.1)**

NOTE: When RCS Boron concentration is less than 16 ppm, the amount of dilution to make a 1°F Tave change will be greater than 50,000 gallons.

_____ 7. IF RCS Boron concentration is greater than or equal to 16 ppm, THEN calculate the amount of dilution to make a +1°F Tave change. Otherwise, enter N/A for this step and Step 5 on Attachment 2.

$$-50813 \times \ln\left(1 \quad \text{Step 5} \quad \right)$$

(Page 3 of 3)

Attachment 1

CALCULATING REACTIVITY PARAMETERS

NOTE: If the value of ITC is between rod steps listed in the Curve Book, select the rod height with the highest rod worth. Interpolation to an unlisted rod height is not necessary.

_____ 8. Determine the number of rod steps from the fully withdrawn position that equates to a 1°F Tave change by performing the following calculations.

a. Current rod height: _____ Steps

b. Value of ITC (+) _____ pcm (Record as a + value)

c. Rod height associated with b _____ Steps

d. Subtract a - c _____ Steps (Reactivity Summary line 6)

(Page 1 of 1)

Attachment 2

REACTIVITY SUMMARY SHEET

1. Reactor Operators will discuss Items 4-8 with the Unit SRO following turnover.

2. See Subsection 5.2 for directions to complete Items 4 through 8.

3. Reactor Power _____ %

4. Boron for 1°F decrease _____ GAL BA

5. Dilution for 1°F increase _____ GAL PG

6. Rod steps for 1°F change _____ Steps

7. Gallons of boric acid for 1 ppm change _____ GAL BA

8. Gallons of PG for 1 ppm change _____ GAL PG

Completed by: _____ Date: _____
Reactor Operator

Verified by: _____ Date: _____
Reactor Operator or STA

(Page 1 of 1)

Attachment 3

CONVERTING BORON CHANGE FOR RAMPS TO GALLONS OF BORIC ACID

1. Perform the following calculation using the plot in the 1-OP-RX-010 folder.

   a. Record the Boron Change from graph: _____ ppm

   b. Use the Boron recorded in Substep a in the following equation to determine amount of Boric Acid required for ramp. Record below.

$$-50813 \times \ln\left(1 + \frac{\text{Boron change from Graph}}{\text{Current Boron} - C_B BAST}\right)$$

$$-50813 \times \ln\left(1 + \frac{_____}{_____ - _____}\right) = _____ \text{ gal of Boric Acid}$$

Completed by: _____ Date: _____

Reviewed by: _____ Date: _____

(Page 1 of 2)

Attachment 4
COMMON CALCULATION ERRORS

1. Rounding off numbers during the calculations can lead to results being out of tolerance.

Example: Determine gal BA for 1 ppm change when RCS is at 300 ppm.

Item 10: Use the following calculation:

Amount of boron to make a 1 ppm change:

$$-50813 \times \ln\left(1 + \frac{1}{\text{Current Boron} - C_B\text{BAST}}\right)$$

Use:

$$\frac{300}{\text{Current } C_B} - \frac{13984}{C_{BAST}} = -13684 \quad [5]$$

$$1 \div \frac{-13684}{[5]} = \mathbf{-0.000073078} \quad [6]$$

-50813 × ln (1 + _____) = _____ gal BA (Rctvy Sum. line 8)

If [6] is rounded off to –0.0001 (4 decimal places) then the answer is 5.1 **gal BA**

If [6] is rounded off to –0.00007 (5 decimal places) then the **answer is 3.6** gal BA

Therefore, Reactor Engineering states that calculations such as this should be kept to at least 5 decimal places to ensure accuracy.

(Page 2 of 2)

Attachment 4

COMMON CALCULATION ERRORS

2. Errors when reading the Delta-I Control for Rapid Power Reduction Transients from HFP, ARO graph. (Self Check)

   - The curve is built for a down power. Target power goes from 100% on the left to 50% on the right.
   - Using "D-bank Insertion" line to get data for "Boron Change" and vice-versa.
   - Interpolation errors between times in core life.

3. When determining the amount of reactivity associated with a rapid power reduction, some people only calculated the amount of boric acid.
   The DELTA-I Control for Rapid Power Reduction Transients from HFP, ARO graph should be used to find the amount of Boric Acid and Rod Motion that together should be needed to lower Rx Power and keep Delta Flux in band.
   It should be noted that this curve need not be consulted before the commencement of an 0-AP-23.00 Rapid Load Reduction. However, the curve is used after the plant has been stabilized at the lower power to verify actual plant conditions to be as expected (i.e. Rod Height and Boron PPM).

4. Reading the Boron Coefficient Curve incorrectly. (Self Check)

5. Transferring the wrong information from the calculation pages to Attachment 2.

(Page 1 of 2)

Attachment 5
IFBA CORE BLENDED FLOW MAKEUPS

NOTE: This Attachment is only required to be performed when blended makeups are to be used to offset daily small IFBA core reactivity changes.
This guidance is intended to calculate the required reactivity changes in the region where the boron letdown curve is relatively flat for an IFBA core (approximately 500 to 3000 MWD/MTU).

_____ 1. Determine the following parameters:

a. Current Core Burnup: _____(MWD/MTU)
[From Att. 1 Step 1.a.]

b. Anticipated Average Power in next two weeks: _____(%)

c. Burnup in two weeks: _____ + ((490/_____)*100) = _____(MWD/MTU)
Step 1.a. Step 1.b.

d. Predicted Boron from the Critical Boron Concentration vs. Burnup, Hot Full Power, All Rods Out curve, at burnup in Step 1.a. _____(ppm)

e. Predicted Boron from Critical Boron Concentration vs. Burnup, Hot Full Power, All Rods Out curve, at burnup in Step 1.c. _____(ppm)

f. Predicted Boron Change: _____ - _____ = _____(ppm)
Step 1.e. Step 1.d.

g. Predicted Daily Boron Change: _____ / 14 = _____ (ppm)
Step 1.f.

(Page 2 of 2)

Attachment 5

IFBA CORE BLENDED FLOW MAKEUPS

NOTE: The Controller Pot settings calculated in the following 2 steps assume the blender will be run for exactly one minute for ease of calculation. The blender controllers must be restored to the proper settings based on current boron concentration following the blended makeup so that automatic makeups will not significantly change reactivity.

_____ 2. If Step 1.g. is negative, do the following. Otherwise, enter N/A for this step:

a. Record gallons PG for 1 ppm change from Att 2, Step 8: _____ (gal)

b. Determine daily extra PG: (-) _____ * _____ = _____(gal)
Step 1.g. Step 2.a.

c. Current Blended Makeup PG controller pot setting: _____ (turns)

d. Additional PG pot turns required: _____ / 15 = _____ (turns)
Step 2.b.

e. Required PG pot setting to offset burnup: _____ + _____ = _____(turns)
Step 2.c. Step 2.d.

NOTE: The method used to set the Blender Boric Acid pot in 1-OP-CH-007, Blender Operations, can be used to determine a more exact blender setting.

_____ 3. If Step 1.g. is positive, do the following. Otherwise, enter N/A for this step:

a. Record gallons BA for 1 ppm change from Att 2, step 7: _____ (gal)

b. Determine daily extra BA: _____ * _____ = _____ (gal)
Step 1.g. Step 3.a.

c. Current Blended Makeup BA controller pot setting: _____ (turns)

d. Additional BA pot turns required: / 2.5 = (turns)

U.S. Nuclear Regulatory Commission
Surry Power Station

SR10301
Administrative Job Performance Measure 2.1.23

Applicant_____ Start Time_____

Examiner_____

Date _____ Stop Time_____

Title

COMPLETE 1-OPT-RC-10.0, REACTOR COOLANT LEAKAGE – COMPUTER CALCULATED

K/A: G2.1.23 – Ability to perform specific system and integrated plant procedure during all modes of plant operation. (4.3/4.4)

Applicability	**Est Completion Time**	**Actual Time**
SRO(I)	30 Minutes	_____

Conditions

- Task is to be PERFORMED in the SIMULATOR or CLASSROOM.
- Performance of 1-OPT-RC-10.0, Reactor Coolant Leakage – Computer Calculated, is required.

Standards

- Completes the remaining portions of 1-OPT-RC-10.0, Reactor Coolant Leakage – Computer Calculated, and determines that the procedure was unsatisfactory.

Standards for Part 2 (after completion of 1-OPT-RC-10.0)

- Determines that the primary to secondary leakage from the completed copy of 1-OPT-RC-10.0 violates Technical Specification requirement and notes that the actions contained within Technical Specification 3.1.C.3 are applicable.

Initiating Cues

- Given simulated plant conditions, perform the remainder of 1-OPT-RC-10.0, Reactor Coolant Leakage – Computer Calculated, and submitted the procedure for review by the Unit Supervisor.

Initiating Cues for Part 2 (after completion of 1-OPT-RC-10.0)

- Given a completed copy of 1-OPT-RC-10.0 determine if the results are within the bounds of the Technical Specifications, and if not, what actions are necessary.

Initial Conditions

- It is mid-shift on May 22, 2010. Unit 1 power is 100 percent.
- I am the Nuclear Shift Manager. I have assigned you to complete the normal daily 1-OPT-RC-10.0, Reactor Coolant Leakage – Computer Calculated. The procedure is complete up through Step 6.2.11 and the computer generated leak rate data sheet has just been printed out, the leak rate ran for 125 minutes. You are to complete 1-OPT-RC-10.0, Reactor Coolant Leakage – Computer Calculated it is entirety and when done turn the procedure in for review.

- The following are the Unit conditions:
  - Reactor power: 100%
  - Charging flow control is in automatic.
  - One PDTT pump was placed in automatic after the PCS computer leak rate program results were printed.
  - Containment Sump Data:
    - Initial containment sump level was 47% as indicated on 1-DA-LI-100
    - Final containment sump level was 62% as indicated on 1-DA-LI-100.
    - Containment Sump leak rate elapsed time – 60 minutes.
    - After this data was recorded, one containment sump pump was placed back in automatic

  Primary to Secondary Leakage exists and is known and has been indicating in the 15 – 25 gpd range per steam generator for the past week. Today the N-16 monitors are slightly elevated and indicate the following:
  SG A: 24.4 gpd
  SG B: 22.1 gpd
  SG C: 25.6 gpd

  The Leakrate spreadsheet is located at folder S:\SURRY PWR STA\3\Ops\Leakrate on the desktop of your laptop computer.

- Here is a partially completed copy of 1-OPT-RC-10.0, Reactor Coolant Leakage – Computer Calculated. I need you to complete 1-OPT-RC-10.0, Reactor Coolant Leakage – Computer Calculated it is entirety and when done turn the procedure in for review.

- When you are ready to have your work reviewed, please inform me, as this will end the JPM.

Initial Conditions for Part 2 (after completion of 1-OPT-RC-10.0)

- Now that you have completed 1-OPT-RC-10.0, Reactor Coolant Leakage – Computer Calculated, I need you to determine if the results are within the bounds of the Technical Specifications, and if not, what actions are necessary.

Terminating Cues

- 1-OPT-RC-10.0 has been completed and is ready to be reviewed.

Terminating Cues for Part 2 (after completion of 1-OPT-RC-10.0)

- 1-OPT-RC-10.0 has been completed and is ready to be reviewed.

Procedures

- 1-OPT-RC-10.0, Reactor Coolant Leakage – Computer Calculated (Revision 33)

Tools and Equipment

- Calculator
- RCS Leakrate Spreadsheet
- Large Stapler

Safety Considerations

- None

Notes

Performance Checklist

Notes to the Evaluator.

- Task critical elements are bolded and noted by the words “Critical Step” at the end of the step.
- **START TIME:**

STEP 1: 3.0 INITIAL CONDITIONS Notes prior to Step 3.1 • Reactor Coolant System (RCS) temperature and pressure stability for the purposes of this procedure shall be determined by Shift Supervision. • An RCS water inventory balance must be performed once every 24 hours. Surveillance requirement specified time intervals may be adjusted plus or minus 25% to accommodate normal test schedules. • If required RCS pressure conditions cannot be met, 1-OPT-RC-10.01, Reactor Coolant Leakage – Manually Calculated, must be performed. 3.1 Verify that the Reactor Coolant System is being maintained at stable temperature and pressure. 3.2 Verify that Reactor Coolant System Pressure is greater than 2100 psig and less than 2500 psig. **STANDARD:** (a) Acknowledges/Reviews the Initial Conditions. **EVALUATOR’S NOTE:** • None **COMMENTS:**	_____ **SAT** _____ **UNSAT**

STEP 2: 4.0 PRECAUTIONS AND LIMITATIONS 4.1 The RCS leak rate program on the PCS plant computer will halt if VCT level increases by 2.0%, if PDTT level decreases by 1.0%, or if PRZR level changes (increases or decreases) by 2.0% during the performance of the program. 4.2 Routine daily leak rate determinations should be performed over a minimum time period of two hours, when a computer calculation of the RCS leak rate is performed. 4.3 Reactor Coolant System sampling should **not** take place during the performance of this procedure. 4.4 RCS temperature and pressure should be maintained as stable as possible when a RCS leak rate calculation is being performed during a pause in a Reactor Coolant System (RCS) heat up or cool down. 4.5 A leak rate based on an RCS water inventory balance is required once every 24 hours, but is not required to be completed until 12 hours after establishment of steady state operation. (stable pressure, temperature, power level, Pressurizer and makeup tank levels, makeup and letdown, and RCP seal injection and return flow) Refer to Tech Spec 4.13, SR 4.13.A. 4.6 The initials identification block in Subsection 7.3 must be completed before this procedure is closed out. 4.7 If any one data point from the leakrate printout or the final leakrate results are marked with POOR or BAD, or has any reason code, (for example, L, H, or S) the leakrate should be considered unreliable. 4.8 The RCS leak rate calculation should not be performed until 10 minutes have passed following pumping the PDTT. 4.9 The RCS must be maintained at steady state during the performance of the leak rate. Steady state is defined as: • Power change less than one percent of rated Thermal Power • RCS temperature change less than 2°F • RCS pressure change less than 5 psig • No change in letdown or makeup systems • PRZR level change less than 2% • No RCP standpipe fills	_____ **SAT** _____ **UNSAT**

4.10 Any evolution that changes level in the PDTT (for example, draining the PRT, making up to the RCP Vapor Seal Tank, or cycling of the Gas Stripper) may negate the validity of this OPT. **STANDARD:** (a) Acknowledges/Reviews the Precautions and Limitations. **EVALUATOR'S NOTE:** • None **COMMENTS:**	

STEP 3:

Reviews completed procedure Section 6.1 and procedure Section 6.12 up to Step 6.2.12.

STANDARD:

(a) Acknowledges procedure status up to Step 6.2.12.

EVALUATOR'S NOTE:

- None

COMMENTS:

_____ **SAT**

_____ **UNSAT**

STEP 4:

Step 6.2.12:

6.2.12 Evaluate unidentified RCS leak rate result and perform the actions indicated in the table below. Enter N/A for the condition that does not exist, or if the unidentified RCS leak rate is positive

Evaluation of RCS Leakrate

Unidentified RCS Leakrate:	**Actions to be taken:**	**Initials**
With a negative Unidentified leakrate greater than -0.08 gpm	a. REPEAT steps 6.2.7 through 6.2.12 to obtain valid unidentified RCS Leak Rate Calculation. b. IF a valid Unidentified RCS Leak Rate calculation cannot be obtained, THEN perform a manual leak rate IAW 1-OPT-RC-10.0	_____ _____
With a negative Unidentified leakrate less than or equal to -0.08 gpm	a. Enter zero for unidentified RCS leak rate. b. Adjust total leak rate fto equal to the identified leak rate. c. Make a comment in the Operator Comments in Subsection 7.3.	_____ _____ _____

_____ **SAT**

_____ **UNSAT**

STANDARD: (a) Marks the Initial Column Lines as “N/A”. **EVALUATOR’S NOTE**: • None. **COMMENTS:**	

STEP 5:

Step 6.2.13

6.2.13 Record the Total, Unidentified, and Identified RCS leak rates (gpm) in Attachment 1. Use results from Step 6.2.12 if performed, otherwise use computer printout results.

_____ **SAT**

_____ **UNSAT**

STANDARD:

(a) Proceeds to Attachment 1 to record data from RCS Leak Rate Printout.

EVALUATOR'S NOTE:

Summary of Reactor Coolant Leak Rate Test Results			
RCS Leak Rate Data	Identified leakage from the LAST (most recent previously calculated leak rate data) performance of 1-OPT-RC-10.0 or 1-OPT-RC-10.1, as appropriate	Current values:	
Total OTHER Identified Leakage:	0 (gpm)	0 (gpm)	
Total Unidentified RCS Leak Rate:		0.13 (gpm)	
Identified RCS Leak Rate:		0.15 (gpm)	
Total RCS Leak Rate:		0.28 (gpm)	

COMMENTS:

STEP 6: Step 6.2.14 6.2.14 Print and attach the PCS computer printout leak rate program results to this procedure as a permanent record of the derivation of the RCS Leak rates recorded in Step 6.2.13. **STANDARD:** (a) Acknowledges and signs this Step. **EVALUATOR'S NOTE:** • None **COMMENTS:**	_____ **SAT** _____ **UNSAT**
STEP 7: Step 6.2.15 6.2.15 Verify one PDTT pump is in AUTO. **STANDARD:** (a) Recalls from initial conditions that one PDTT pump is in Automatic. **EVALUATOR'S NOTE:** • None **COMMENTS:**	_____ **SAT** _____ **UNSAT**

STEP 8: Step 6.2.16 6.2.16 IF charging flow control was placed in Manual in Step 6.2.4, THEN do the following. Otherwise, enter N/A. a. Verify or adjust CHG flow to maintain PRZR level at programmed setpoint. b. Place 1-CH-FCV-1122, CHG FLOW CNTRL, in Auto. **STANDARD:** (a) Recalls from initial conditions that charging flow control is in Automatic and marks this step as N/A. **EVALUATOR'S NOTE:** • Candidate will proceed to Section 6.3. **COMMENTS:**	_____ **SAT** _____ **UNSAT**
STEP 9: Reviews procedure Section 6.3 up to Step 6.3.2. **STANDARD:** (a) Acknowledges procedure status up to Step 6.3.2 and that these steps have been signed off as completed. **EVALUATOR'S NOTE:** • None **COMMENTS:**	_____ **SAT** _____ **UNSAT**

STEP 10:

Step 6.3.3

6.3.3 Record the required initial data for calculating the Containment Sump in-leakage rate (Attachment 4, Table 1 – Containment Sump In Leakage Rate, Column 3).

_____ **SAT**

_____ **UNSAT**

STANDARD:

(a) Recalls from initial conditions that initial containment sump level was 47%.
(b) Records initial containment sump level in Attachment 4.

EVALUATOR'S NOTE:

Table 1 – Containment Sump In Leakage Rate

Parameter being analyzed	Column 2	Column 3	
	Final Value of Parameter at END of Time	Initial Value of Parameter at START of Time	** Change in Parameter (+ or -) (final value – initial value)
Elapsed Time	65 minutes ago	125 minutes ago	60 (Minutes)
CTMT Sump Level instrument used: 1-DA-LI-100, 1-DA-LI-110A, or 1-DA-LI-110B	Circle instrument used 1-DA-LI-100, 1-DA-LI-110A, or 1-DA-LI-110B	Circle instrument used 1-DA-LI-100, 1-DA-LI-110A, or 1-DA-LI-110B	N/A
CTMT Sump Level	(% or IN)	47 (% or IN)	N/A
CTMT Sump Volume from curve in 1-DRP-003	(gallons)	(gallons) 34.6465	(gallons)

Elapsed time will be filled in as an initial condition.
If candidate uses chart to determine containment volume:
Answer: 34.6465 [range 34.6465 – 35 gallons]

If candidate uses graph to determine containment volume:

Answer: 35 gallons [range 34 – 36 gallons] **COMMENTS:**	

STEP 11:

Step 6.3.4

6.3.4 Record the required final data for calculating the Containment Sump in-leakage rate (Attachment 4, Table 1 – Containment Sump In Leakage Rate, Column 2).

STANDARD:

(a) Recalls from initial conditions that final containment sump level was 62%.
(b) Records final containment sump level in Attachment 4.

EVALUATOR'S NOTE:

Table 1 – Containment Sump In Leakage Rate

Parameter being analyzed	Column 2	Column 3	
	Final Value of Parameter at END of Time	Initial Value of Parameter at START of Time	** Change in Parameter (+ or -) (final value – initial value)
Elapsed Time	65 minutes ago	125 minutes ago	60 (Minutes)
CTMT Sump Level instrument used: 1-DA-LI-100, 1-DA-LI-110A, or 1-DA-LI-110B	Circle instrument used 1-DA-LI-100, 1-DA-LI-110A, or 1-DA-LI-110B	Circle instrument used 1-DA-LI-100, 1-DA-LI-110A, or 1-DA-LI-110B	N/A
CTMT Sump Level	62 (% or IN)	47 (% or IN)	N/A
CTMT Sump Volume from curve in 1-DRP-003	(gallons) 39.439	(gallons) 34.6465	(gallons)

Elapsed time will be filled in as an initial condition.
If candidate uses chart to determine containment volume:
Answer: 39.439 [range 39 – 39.439 gallons]

If candidate uses graph to determine containment volume:

_____ **SAT**

_____ **UNSAT**

Answer: 39 gallons [range 38 – 40 gallons] **COMMENTS:**	

STEP 12:

Step 6.3.5

6.3.5 Calculate the change in parameter from the initial start conditions to the final end conditions and record the elapsed time in Table 2 – Containment Sump In-leakage Rate. (Attachment 4).

STANDARD:

(a) Calculated the difference in containment sump volume. This is a critical step.

(b) Records difference in containment sump level in Attachment 4.

EVALUATOR'S NOTE:

Table 1 – Containment Sump In Leakage Rate			
Parameter being analyzed	Column 2	Column 3	
	Final Value of Parameter at END of Time	Initial Value of Parameter at START of Time	** Change in Parameter (+ or -) (final value – initial value)
Elapsed Time	65 minutes ago	125 minutes ago	60 (Minutes)
CTMT Sump Level instrument used: 1-DA-LI-100, 1-DA-LI-110A, or 1-DA-LI-110B	Circle instrument used 1-DA-LI-100, 1-DA-LI-110A, or 1-DA-LI-110B	Circle instrument used 1-DA-LI-100, 1-DA-LI-110A, or 1-DA-LI-110B	N/A
CTMT Sump Level	62 (% or IN)	47 (% or IN)	N/A
CTMT Sump Volume from curve in 1-DRP-003	(gallons) 39.439	(gallons) 34.6465	(gallons) 4.7925

Elapsed time will be filled in as an initial condition.
If candidate uses chart to determine containment volume:
Answer: 4.7925 [range 4 – 5 gallons]

If candidate uses graph to determine containment volume:
Answer: 4 gallons [range 2 – 6 gallons]

_____ **SAT**

_____ **UNSAT**

Table 2 – Containment Sump In Leakage rate		
Change in Parameter (+/-) (final value – initial value)	Divided by Elapsed Time	Sump In Leakage rate
CTMT Sump Volume Change 4.7925 (gallons)	(minutes) 60	(gpm)

Elapsed time will be filled in as an initial condition.

COMMENTS:

STEP 13:

Step 6.3.6

6.3.6 Calculate the total Containment Sump In Leakage Rate in gallons per minute. (Attachment 4, Table 2 – Containment Sump In Leakage Rate).

STANDARD:

(a) Calculates the containment sump in leakage rate in gallons per minute. This is a critical step.

(b) Records containment sump in leakage rate in Attachment 4.

EVALUATOR'S NOTE:

Table 2 – Containment Sump In Leakage rate		
Change in Parameter (+/-) (final value – initial value)	Divided by Elapsed Time	Sump In Leakage rate
CTMT Sump Volume Change 4.7925 (gallons)	(minutes) 60	(gpm) 0.08

If candidate uses chart to determine containment volume:
Answer: 0.0798754 gpm [range 0.06 – 0.083 gpm]

If candidate uses graph to determine containment volume:
Answer: 0.06667 gpm [range 0.03 – 0.1 gallons]

COMMENTS:

_____ **SAT**

_____ **UNSAT**

STEP 14:

Step 6.3.7

6.3.7 Transfer the Containment Sump In Leakage Rate from Attachment 4, Table 2 – Containment Sump In Leakage Rate, to Attachment 1.

STANDARD:

(a) Records containment sump in leakage rate on Attachment 1.

EVALUATOR'S NOTE:

Summary of Reactor Coolant Leak Rate Test Results			
RCS Leak Rate Data	Identified leakage from the LAST (most recent previously calculated leak rate data) performance of 1-OPT-RC-10.0 or 1-OPT-RC-10.1, as appropriate	Current values:	
Total OTHER Identified Leakage:	0 (gpm)	0 (gpm)	
Total Unidentified RCS Leak Rate:		0.13 (gpm)	
Identified RCS Leak Rate:		0.15 (gpm)	
Total RCS Leak Rate:		0.28 (gpm)	

CTMT Sump In Leakage
CTMT Sump In Leakage Rate:_____0.08____ (gpm)

If candidate uses chart to determine containment volume:
Answer: 0.0798754 gpm [range 0.06 – 0.083 gpm]

If candidate uses graph to determine containment volume:
Answer: 0.06667 gpm [range 0.03 – 0.1 gallons]

_____ **SAT**

_____ **UNSAT**

COMMENTS:	

STEP 15: Step 6.3.8 6.3.8 Verify or place one CTMT sump pump is in AUTO. **STANDARD:** (a) Recalls from initial conditions that one CTMT sump pump is in Automatic. **EVALUATOR'S NOTE:** • None **COMMENTS:**	_____ **SAT** _____ **UNSAT**
STEP 16: Step 6.4 Note prior to Step 6.4.1: • This Subsection is not required if performing a backup leak rate. **STANDARD:** (a) Acknowledges the note. **EVALUATOR'S NOTE:** • None **COMMENTS:**	_____ **SAT** _____ **UNSAT**

STEP 17: Step 6.4.1 6.4.1 Verify primary to secondary leakage through SG A and SG C is less than or equal to 100 gallons per day AND less than or equal to 20 gallons per day through SG B IAW either of the following. Enter N/A for this subsection if RCS temperature is less than 200 °F. _____ If Reactor power is greater than 25%, all N-16 Radiation Monitors are operable. _____ If Reactor power is less than or equal to 25%, OR any N-16 Radiation Monitor is inoperable, Chemistry has verified leakage IAW 0-CPT-SG-003, Steam Generator Primary to Secondary Leakage, if stable RCS conditions exist. **STANDARD:** (a) Acknowledges that reactor power is greater than 25% and that SG B is greater than 20 gallons per day. **EVALUATOR'S NOTE:** • None **COMMENTS:**	_____ **SAT** _____ **UNSAT**
STEP 18: Note prior to Step 6.4.2: • Primary to secondary leakage determination through each SG is required every 72 hours. If an SG N-16 Radiation Monitor is inoperable, sampling will be used to determine this leak rate. **STANDARD:** (a) Acknowledges the note. **EVALUATOR'S NOTE:**	_____ **SAT** _____ **UNSAT**

• None **COMMENTS:**	

STEP 19: Step 6.4.2 6.4.2 Record primary to secondary leakage from each SG below. Enter N/A for SG(s) if N-16 monitor inoperable. • SG A _____ gpd • SG B _____ gpd • SG C _____ gpd **STANDARD:** (a) Records the values from the initial conditions as indicated below • SG A 24.4 gpd • SG B 22.1 gpd • SG C 25.6 gpd **EVALUATOR'S NOTE:** • None **COMMENTS:**	_____ **SAT** _____ **UNSAT**
STEP 20: Step 6.4.3 6.4.3 If any N-16 inoperable, AND RCS is in a stable condition to perform leakrate, THEN notify Chemistry AND record person notified and date/time below. Otherwise, enter N/A. **STANDARD:** (a) Records N/A for this step. **EVALUATOR'S NOTE:** • None	_____ **SAT** _____ **UNSAT**

COMMENTS:	

STEP 21: Step 6.5 Notes prior to Step 6.5.1: • The Leakrate spreadsheet is located at S:\SURRY PWR STA\3\Data1\OPS\Leakrate\1-OPT-RC-10.0. Backup leakrates are to be entered in “Backup Statistics” tab of spreadsheet, if applicable. **STANDARD:** (a) Acknowledges the notes. **EVALUATOR’S NOTE:** • None **COMMENTS:**	_____ **SAT** _____ **UNSAT**

STEP 22:

Step 6.5.1

6.5.1 Update 1-OPT-RC-10.0 Data Entry tab in 1-OPT-RC-10.0 spreadsheet with Daily primary leak rate, primary to secondary leak rate, and sump in-leakage information.

_____ **SAT**

_____ **UNSAT**

STANDARD:

(a) Opens the leakrate spreadsheet and enters the required data.

EVALUATOR'S NOTE:

- Pre-data Entry

Date	Total (gpm)	Identified (gpm)	Unidentified (gpm)	Sump (gpm)	'A' (gpd)	'B' (gpd)	'C' (gpd)
05/15/10	0.240	0.150	0.090	0.140	24.200	15.200	25.400
05/16/10	0.220	0.120	0.110	0.130	24.400	15.300	25.400
05/17/10	0.250	0.150	0.100	0.130	24.200	14.800	25.600
05/18/10	0.230	0.130	0.090	0.130	24.300	14.900	25.100
05/19/10	0.230	0.140	0.100	0.130	24.500	15.200	25.300
05/20/10	0.250	0.160	0.090	0.130	24.200	15.300	25.700
05/21/10	0.250	0.160	0.090	0.130	24.400	15.200	25.400

	Action Level 1			Action Level 2		Action Level 3	
Date	Unident. Leakage (gpm)	7 Day Average Unidentified Leak Rate > .1 gpm	9 last Consecutive Unidentified Leak Rates > baseline mean	2 Consecutive Unidentified Leak Rates >.15 gpm	2 of 3 consecutive Unidentified Leak Rates > baseline mean + 2 standard deviations	Unident. Leak Rate > baseline mean + 3 standard deviations	Unident. Leak Rate >.3 gpm
05/21/10	0.090	0	0	0	0	0	0
05/20/10	0.090	0	0	0	0	0	0
05/19/10	0.100	0	0	0	0	0	0

05/18/10	0.090	0	0	0	0	0	0
05/17/10	0.100	0	0	0	0	0	0
05/16/10	0.110	0	0	0	0	0	0
05/15/10	0.090	0	0	0	0	0	0

COMMENTS:

STEP 23:

Step 6.5.2

6.5.2 Review leakage trends in 1-OPT-RC-10.0 spreadsheet.

_____ **SAT**

_____ **UNSAT**

STANDARD:

(a) Reviews the trends for 5/22/10 and notes that B SG primary to secondary leakage is elevated and that the plant is in action level 1 for RCS leakage.

EVALUATOR'S NOTE:

- Post-data Entry

Date	Total (gpm)	Identified (gpm)	Unidentified (gpm)	Sump (gpm)	'A' (gpd)	'B' (gpd)	'C' (gpd)
05/15/10	0.240	0.150	0.090	0.140	24.200	15.200	25.400
05/16/10	0.220	0.120	0.110	0.130	24.400	15.300	25.400
05/17/10	0.250	0.150	0.100	0.130	24.200	14.800	25.600
05/18/10	0.230	0.130	0.090	0.130	24.300	14.900	25.100
05/19/10	0.230	0.140	0.100	0.130	24.500	15.200	25.300
05/20/10	0.250	0.160	0.090	0.130	24.200	15.300	25.700
05/21/10	0.250	0.160	0.090	0.130	24.400	15.200	25.400
05/22/10	**0.280**	**0.150**	**0.130**	**0.080**	**24.400**	**22.100**	**25.600**

	Action Level 1			Action Level 2		Action Level 3	
Date	Unident. Leakage (gpm)	7 Day Average Unidentified Leak Rate > .1 gpm	9 last Consecutive Unidentified Leak Rates > baseline mean	2 Consecutive Unidentified Leak Rates >.15 gpm	2 of 3 consecutive Unidentified Leak Rates > baseline mean + 2 standard deviations	Unident. Leak Rate > baseline mean + 3 standard deviations	Unident. Leak Rate >.3 gpm
5/22/10	**0.13**	**1**	**0**	**0**	**0**	**0**	**0**
05/21/10	0.090	0	0	0	0	0	0
05/20/10	0.090	0	0	0	0	0	0

05/19/10	0.100	0	0	0	0	0	0
05/18/10	0.090	0	0	0	0	0	0
05/17/10	0.100	0	0	0	0	0	0
05/16/10	0.110	0	0	0	0	0	0
05/15/10	0.090	0	0	0	0	0	0

COMMENTS:

STEP 24:

Notes prior to Step 6.5.3:

- The following information is determined by 1-OPT-RC-10.0 spreadsheet in "Daily Statistics" tab with Yellow representing Action Level 1, Orange representing Action Level 2, and Red representing Action Level 3. If all Action levels are Green, then all criteria is satisfied.
- The OPT-RC-10.0 spreadsheet Action Level criteria are not subject to change and do not need to have the revision number verified. Changes will be made to the baseline mean unidentified leak rate and baseline standard deviation of unidentified leak rate by Engineering following Refueling Outages and as required.

STANDARD:

(a) Acknowledges the Notes.

EVALUATOR'S NOTE:

- None

COMMENTS:

_____ **SAT**

_____ **UNSAT**

STEP 25: Step 6.5.3 6.5.3 IF any of the following criteria apply to the unidentified leakage, THEN initiate 1-OP-RC-014. Otherwise, enter N/A. Action Level 1 _____ One seven day rolling average of Unified RCS Leak Rate greater than 0.1 gpm. _____ Nine consecutive daily Unidentified RCS Leakrates greater than baseline mean. Action Level 2 _____ Two consecutive daily Unidentified RCS leakrates greater than 0.15 gpm. _____ Two of Three consecutive daily Unidentified RCS Leakrates greater than mean +2 standard deviations. Action Level 3 _____ One Unidentified RCS leakrates greater than 0.3 gpm. _____ One Unidentified RCS Leakrate greater than mean +3 standard deviations. STANDARD: **(a) Marks the step as follows:.** **Action Level 1:** **___X___ One seven day rolling average of Unified RCS Leak Rate greater than 0.1 gpm.** **_____ Nine consecutive daily Unidentified RCS Leakrates greater than baseline mean.** **This is a critical step.** EVALUATOR'S NOTE: • If asked, acknowledge the need to perform 1-OP-RC-014. State another operator	_____ **SAT** _____ **UNSAT**

will perform this procedure and to continue on with 1-OPT-RC-10.0 COMMENTS:	

STEP 26:

_____ **SAT**

_____ **UNSAT**

7.1 Acceptance Criteria.

7.1.1 Evaluate the test results by reviewing the following acceptance criteria.

_____ The Unidentified Leakage Rate is less than or equal to 1.0 gpm.
_____ The Total Identified Leakage Rate is less than or equal to 10.0 gpm.
_____ Primary to secondary leakage through each Steam Generator is being monitored IAW 0-CPT-SG-003, OR is less than or equal to 100 gallons per day through SG A and SG C AND less than or equal to 20 gallons per day through SG B as determined by N-16 Radiation Monitors

7.1.2 Document the test results.

_____ Satisfactory _____ Unsatisfactory

STANDARD:

(a) Completes this section as follows:

7.1.1 Evaluate the test results by reviewing the following acceptance criteria.

___X___ The Unidentified Leakage Rate is less than or equal to 1.0 gpm.
___X___ The Total Identified Leakage Rate is less than or equal to 10.0 gpm.
_____ Primary to secondary leakage through each Steam Generator is being monitored IAW 0-CPT-SG-003, OR is less than or equal to 100 gallons per day through SG A and SG C AND less than or equal to 20 gallons per day through SG B as determined by N-16 Radiation Monitors

7.1.2 Document the test results.

_____ Satisfactory ___X___ Unsatisfactory

This is a critical step. **EVALUATOR'S NOTE:** • Acknowledge the completion of the task. **COMMENTS:**	

STEP 27: 7.2 Follow on Tasks. 7.2.1 If the test was unsatisfactory, THEN perform the following actions. Otherwise, enter N/A. a. Document the reason for the unsatisfactory test in Operator Comments. b. Notify System Engineering of unsatisfactory conditions and record the name of the person notified. c. The system engineer will initiate an evaluation for license renewal of potential aging effects such as material or cracking. d. Initiate a Condition Report and record the number below. e. Initiate the use of 1-AP-16.00, Excessive RCS Leakage. 7.2.2 IF a partial operability test was performed, THEN document the reason for the partial test in Operator Comments. Otherwise, enter N/A. **STANDARD:** (a) The candidate will document that the test was performed unsat in the Operator Comments due to the primary to secondary leakage. May also note that the plant is in action level 1 and 1-OP-RC-014 is required. Words to the effect follow: "This PT was completed unsat due to primary to secondary leakage greater than 20 gpd on B SG." (b) Will inform the evaluator that system engineering needs to be notified, a CR will be required and that AP-16 will need to be evaluated. **EVALUATOR'S NOTE:** • System Engineer: Karlie F. Irwine. **COMMENTS:**	_____ **SAT** _____ **UNSAT**

STEP 28: 7.3 Notification, Documentation and Procedure Closeout. 7.3.1 Notify Shift Supervision that the test is complete. 7.3.2 Document Leak Rate results in Unit 1 Narrative Logs. **STANDARD:** (a) Will inform the evaluator that the test is complete. (b) Will inform the evaluator that the leak rate needs to be documented. **EVALUATOR'S NOTE:** • None. **COMMENTS:**	_____ **SAT** _____ **UNSAT**

STOP TIME (Part 1):

_____

_____

_____

_____

_____

_____

_____

_____

_____

_____

_____

_____

_____

PART 2 of JPM:

Start Time:_____

STEP 28: PART 2 of JPM Directions to Candidate: • Now that you have completed 1-OPT-RC-10.0, Reactor Coolant Leakage – Computer Calculated, I need you to determine if the results are within the bounds of the Technical Specifications, and if not, what actions are necessary. STANDARD: (a) Will inform the evaluator that the results are not within the bound of Technical Specifications. (b) Will inform the evaluator that the actions from Technical Specification 3.1.C.3 need to be adhered to (i.e., 6 hour clock to hotshutdown). EVALUATOR'S NOTE: • None. COMMENTS:	_____ **SAT** _____ **UNSAT**

STOP TIME (Part 2):

Operator Directions Handout
(TO BE READ TO APPLICANT BY EXAMINER)

Task

- Task is to be PERFORMED in the SIMULATOR or CLASSROOM.
- Given simulated plant conditions, perform the remainder of 1-OPT-RC-10.0, Reactor Coolant Leakage – Computer Calculated, and submitted the procedure for review by the Unit Supervisor.

Directions

The evaluator will explain the initial conditions of the task to be performed and will provide the initiating cue. Ensure you indicate to the evaluator when you understand your assigned task.

Initial Conditions

- It is mid-shift on May 22, 2010. Unit 1 power is 100 percent.
- I am the Nuclear Shift Manager. I have assigned you to complete the normal daily 1-OPT-RC-10.0, Reactor Coolant Leakage – Computer Calculated. The procedure is complete up through Step 6.2.11 and the computer generated leak rate data sheet has just been printed out, the leak rate ran for 125 minutes. You are to complete 1-OPT-RC-10.0, Reactor Coolant Leakage – Computer Calculated it is entirety and when done turn the procedure in for review.

- The following are the Unit conditions:
  - Reactor power: 100%
  - Charging flow control is in automatic.
  - One PDTT pump was placed in automatic after the PCS computer leak rate program results were printed.
  - Containment Sump Data:
    - Initial containment sump level was 47% as indicated on 1-DA-LI-100.
    - Final containment sump level was 62% as indicated on 1-DA-LI-100.
    - Containment Sump leak rate elapsed time – 60 minutes.
    - After this data was recorded, one containment sump pump was placed back in automatic

  Primary to Secondary Leakage exists and is known and has been indicating in the 15 – 25 gpd range per steam generator for the past week. Today the N-16 monitors are slightly elevated and indicate the following:
  SG A: 24.4 gpd
  SG B: 22.1 gpd
  SG C: 25.6 gpd

  The Leakrate spreadsheet is located at folder S:\SURRY PWR STA\3\Ops\Leakrate on the desktop of your laptop computer.

Initiating Cues:

- Here is a partially completed copy of 1-OPT-RC-10.0, Reactor Coolant Leakage – Computer Calculated. I need you to complete 1-OPT-RC-10.0, Reactor Coolant Leakage – Computer Calculated it is entirety and when done turn the procedure in for review.

- When you are ready to have your work reviewed, please inform me, as this will end the JPM.

Operator Directions Handout
(TO BE GIVEN TO APPLICANT)

Initial Conditions

- It is mid-shift on May 22, 2010. Unit 1 power is 100 percent.
- I am the Nuclear Shift Manager. I have assigned you to complete the normal daily 1-OPT-RC-10.0, Reactor Coolant Leakage – Computer Calculated. The procedure is complete up through Step 6.2.11 and the computer generated leak rate data sheet has just been printed out, the leak rate ran for 125 minutes. You are to complete 1-OPT-RC-10.0, Reactor Coolant Leakage – Computer Calculated it is entirety and when done turn the procedure in for review.

- The following are the Unit conditions:
  - Reactor power: 100%
  - Charging flow control is in automatic.
  - One PDTT pump was placed in automatic after the PCS computer leak rate program results were printed.
  - Containment Sump Data:
    - Initial containment sump level was 47% as indicated on 1-DA-LI-100.
    - Final containment sump level was 62% as indicated on 1-DA-LI-100.
    - Containment Sump leak rate elapsed time – 60 minutes.
    - After this data was recorded, one containment sump pump was placed back in automatic

  Primary to Secondary Leakage exists and is known and has been indicating in the 15 – 25 gpd range per steam generator for the past week. Today the N-16 monitors are slightly elevated and indicate the following:
  SG A: 24.4 gpd
  SG B: 22.1 gpd
  SG C: 25.6 gpd

  The Leakrate spreadsheet is located at folder S:\SURRY PWR STA\3\Ops\Leakrate on the desktop of your laptop computer.

Initiating Cues:

- Here is a partially completed copy of 1-OPT-RC-10.0, Reactor Coolant Leakage – Computer Calculated. I need you to complete 1-OPT-RC-10.0, Reactor Coolant Leakage – Computer Calculated it is entirety and when done turn the procedure in for review.

- When you are ready to have your work reviewed, please inform me, as this will end the JPM.

REACTOR COOLANT SYSTEM LEAK RATE

DATE: 5/22/10
START TIME: 125 Minutes ago
DURATION REQUESTED: 125
ESTIMATED STOP TIME: Now

OPERATOR ENTERED PARAMETERS:
YLR0001K, OP ENTERED MINUTES TO RUN = 125 MIN
YLR0002K, OP ENTERED IDENT LEAKAGE = 0 GPM
U9130, ROLLING PRT LEAKRATE = 0.00 GPM

REACTOR COOLANT SYSTEM LEAK RATE

DATE: 5/22/10
START TIME: 125 Minutes ago
DURATION REQUESTED: 125
ESTIMATED STOP TIME: Now

OPERATOR ENTERED PARAMETERS:
YLR0001K, OP ENTERED MINUTES TO RUN = 125 MIN
YLR0002K, OP ENTERED IDENT LEAKAGE = 0 GPM
U9130, ROLLING PRT LEAKRATE = 0.00 GPM

CALCULATION OF LEAK RATES

1) RAW DATA OF PDTT LEVEL – START: 40.70 END: 42.91

2) SAMPLE DATA:

RCS TEMPERATURE AVERAGE ((T0400A + T0420A + T0440A)/3:

573.36	573.38	573.37	573.39	573.32	573.38	573.31	573.28	573.40	573.32	573.43	573.32
573.40	573.34	573.35	573.30	573.32	573.34	573.33	573.30	573.33	573.38	573.32	573.35
573.30	573.32	573.37	573.33	573.32	573.32	573.34	573.36	573.34	573.34	573.32	573.32
573.30	573.34	573.31	573.31	573.30							

PRESSURIZER LEVEL AVERAGE ((L0480A + L0481A + L0482A)/3):

56.67	56.79	56.77	56.82	56.77	56.77	56.76	56.71	56.77	56.76	56.77	56.75
56.72	56.69	56.70	56.70	56.69	56.70	56.70	56.71	56.72	56.77	56.75	56.76
56.74	56.76	56.77	56.72	56.65	56.72	56.73	56.76	56.74	56.76	56.72	56.72
56.73	56.70	56.73	56.70	56.73							

VCT LEVEL (L0112A):

42.90	42.81	42.63	42.60	42.50	42.44	42.35	42.38	42.35	42.32	42.26	42.20
42.14	42.14	42.14	42.05	41.93	41.83	41.74	41.65	41.56	41.44	41.41	41.31
41.19	41.25	41.13	41.07	41.01	40.95	40.95	40.77	40.80	40.67	40.61	40.58
40.52	40.49	40.40	40.40	40.34							

RCS PRESSURE AVERAGE ((P0480A + P0481A + P0482A)/3):

2243.38	2243.62	2243.38	2243.87	2243.30	2243.54	2243.22	2243.13	2243.22	2243.54	2243.79	2243.87
2242.89	2242.81	2243.22	2242.73	2243.05	2243.54	2243.54	2242.73	2243.70	2243.95	2244.11	2243.79
2243.54	2244.44	2243.22	2243.46	2243.30	2242.97	2243.70	2244.44	2244.03	2243.54	2244.03	2243.54
2243.30	2242.65	2243.46	2243.22	2243.70							

3) LINEAR REGRESSION STATISTICS:

PARAMETER	SLOPE	START VALUE	END VALUE
TEMPERATURE	-0.00037	573.36	573.31
PRESSURIZER LEVEL	-0.00026	56.75	56.71
VCT LEVEL	-0.02070	42.86	40.27

4) MASS CHANGE DATA (A NEGATIVE RATE IMPLIES MASS TRANSFER OUT OF THE VOLUME):

RCS:	-0.00037 DEGF/MIN	*	-0.07 LBM/CU FT(DEGF)	*	82.08.8 CU FT		=	0.22 LBM/MIN
PRZR:	-0.00026 PCT/MIN	*	74.0 GAL/PCT	*	0.13368 CU FT/GAL	*	37.12 LBM/CU FT	=	-0.10 LBM/MIN
VCT:	-0.02070 PCT/MIN	*	14.1 GAL/PCT	*	0.13368CU FT/GAL	*	61.87 LBM/CU FT	=	-2.41 LBM/MIN

5) CONVERSIONS FOR PDTT, PRT AND IDENTIFIED LEAKAGE TO LBM:

PDTT CHANGE:	42.91 PCT	-	40.70 PCV				=	2.21 PCT
PDTT:	2.21 PCT	*	71.16 LBM/PCT	/	125 MIN		=	1.26 LBM/MIN
PRT:	0.00 GAL/MIN	*	0.13368 CU FT/GAL	*	61.856 LBM/CU FT		=	0.00 LBM.MIN
IDENTIFIED LEAKAGE:	0.00 GAL/MIN	*	0.13368 CU FT/GAL	*	62.310 LBM/CU FT		=	0.00 LBM.MIN

6) TOTAL LEAKAGES IN LBM/MIN:

RCS:	(-1.0) *	0.22 LBM/MIN	+	-0.10 LBM/MIN	+	-2.41 LBM/MIN	=	2.29 LBM/MIN
IDENTIFIED:		1.26 LBM/MIN	+	0.00 LBM/MIN	+	0.00 LBM/MIN	=	1.26 LBM/MIN
UNIDENTIFIED:		2.29 LBM/MIN	-	1.26 LBM/MIN			=	1.03 LBM/MIN

7) TOTAL LEAKAGES IN GALLONS/MINUTE:

RCS:		2.29 LBM/MIN	*	7.48052 GAL/CU FT	/	61.856 LBM/CU FT	=	0.28 GAL/MIN
IDENTIFIED:		1.26 LBM/MIN	*	7.48052 GAL/CU FT	/	61.856 LBM/CU FT	=	0.15 GAL/MIN
UNIDENTIFIED:		0.28 GAL/MIN	-	0.15 GAL/MIN			=	0.13 GAL/MIN

NOTE: VALUES WITH A QUALITY OF “B” ARE UNRELIABLE

REACTOR COOLANT SYSTEM LEAK RATE

DATE: 5/22/10
START TIME: Now

Dominion **OPERATIONS PERIODIC TEST**	PROCEDURE NO: **1-OPT-RC-10.0** REVISION NO: **33**
PROCEDURE TYPE: **OPERATIONS PERIODIC TEST**	UNIT NO: **1**
PROCEDURE TITLE: **REACTOR COOLANT LEAKAGE - COMPUTER CALCULATED**	

LR						

REVISION SUMMARY:

Revised in response to Operations Feedback, OP FB 10-0221 for CR379270. Added P&L 4.10 and revised second note before Step 6.2.10.

UNIT ONE

TABLE OF CONTENTS

Section		Page
1.0	PURPOSE	3
2.0	REFERENCES	3
3.0	INITIAL CONDITIONS	6
4.0	PRECAUTIONS AND LIMITATIONS	6
5.0	SPECIAL TOOLS AND EQUIPMENT	7
6.0	INSTRUCTIONS	8
6.1	General Instructions	8
6.2	Computer Calculation of RCS Leak Rate	10
6.3	Calculation of the Containment Sump Inleakage Rate	14
6.4	Primary to Secondary Leak Rate Verification	16
6.5	Leak Rate Evaluation and Trending	17
7.0	FOLLOW-ON	19
ATTACHMENTS		
1	Summary of Reactor Coolant Leak Rate Test Results and Containment Sump Inleakage	23
2	Determination of Total Other Identified Leakage Excluding PRT and PDTT	24
3	Calculation of PRT Leakage Rate	25

1.0 PURPOSE

1.1 To provide instructions for performing a computer generated daily leak rate test of the Reactor Coolant System by using a mass balance method of Reactor Coolant System Inventory analysis, once every 24 hours, when RCS temperature is greater than 200°F. **(Reference 2.4.1)**

2.0 REFERENCES

2.1 Source Documents

2.1.1 UFSAR Section 4.2, RCS Design and Operation

2.1.2 UFSAR Section 5.3.2, Containment Leakage Monitoring System

2.1.3 UFSAR Section 9.1, Chemical Volume and Control System

2.1.4 UFSAR Section 9.3, Residual Heat Removal System

2.1.5 EWR 91-011, RCS Leakage Calculation Revisions / Surry / 1&2

2.2 Technical Specifications Surry Power Station Units 1 and 2

2.2.1 Technical Specification 3.1.C, RCS Operational Leakage

2.2.2 Technical Specification 4.13, RCS Operational Leakage

2.3 Technical References

2.3.1 1-DRP-003, The Curve Book

2.3.2 1-AP-16.00, Excessive RCS Leakage

2.3.3 1-OPT-RC-10.01, Reactor Coolant Leakage - Manually Calculated

2.3.4 RCS Leakage Program (LR), NABU-FS-00101-VPA, Rev. 1.3, January 2003

2.3.5 Technical Report NE-1381, Rev. 0, Evaluation of Surry Power Station Reactor Coolant System Leak Rate Program

2.3.6 ET NAF-98-0069 REV 1.

2.3.7 Technical Report NE-1270, Rev. 0, Evaluation of Surry Power Station RCS Leak Rate Calculation.

2.3.8 DCP 01-008, Instrument and Controls Upgrade Project, Unit 1

2.3.9 ER-AA-AMP-101, Implementation of Activities Performed by License Renewal Aging Management Coordinators

2.3.10 ODM000122, 1-RC-P-1B #2 Seal Degrading Trend

2.4 Commitment Documents

2.4.1 CTS 50114, Revise RCS leakage calculation procedure to use mass balance method

2.4.5 PI S-2004-1855, PSIRV CAS Recommendations

2.4.6 WCAP-16423-NP, Rev. 0, PWR Owners Group Standard Process and Methods for Calculating RCS Leak Rate

2.4.7 LC000307/LA001424 - LBDCR/TSCR 417, Emergency TS Change for Modified IARC/Revised Reporting Requirements and 20 gpd Primary to Secondary Leakage for Unit 1 B SG

2.4.8 PWROG 07-387 Recommendations for Implementation of Guidelines for PWROG RCS Leak Rate Programs with Respect to NEI-03-08

Init **Verif**

3.0 INITIAL CONDITIONS

NOTE:
- Reactor Coolant System (RCS) temperature and pressure stability for the purposes of this procedure shall be determined by Shift Supervision.
- An RCS water inventory balance must be performed once every 24 hours. Surveillance requirement specified time intervals may be adjusted plus or minus 25% to accomodate normal test schedules.
- If required RCS pressure conditions cannot be met, 1-OPT-RC-10.01, Reactor Coolant Leakage - Manually Calculated, must be performed.

_____ 3.1 Verify that the Reactor Coolant System is being maintained at stable temperature and pressure.

_____ 3.2 Verify that Reactor Coolant System Pressure is greater than 2100 psig and less than 2500 psig.

4.0 PRECAUTIONS AND LIMITATIONS

4.1 The RCS leak rate program on the PCS plant computer will halt if VCT level increases by 2.0%, if PDTT level decreases by 1.0%, or if PRZR level changes (increases or decreases) by 2.0% during the performance of the program.

4.2 Routine daily leak rate determinations should be performed over a minimum time period of two hours, when a computer calculation of the RCS leak rate is performed.

4.5 A leak rate based on an RCS water inventory balance is required once every 24 hours, but is not required to be completed until 12 hours after establishment of steady state operation. (stable pressure, temperature, power level, Pressurizer and makeup tank levels, makeup and letdown, and RCP seal injection and return flow) Refer to Tech Spec 4.13, SR 4.13.A.

4.6 The initials identification block in Subsection 7.3 must be completed before this procedure is closed out.

4.7 If any one data point from the leakrate printout or the final leakrate results are marked with POOR or BAD, or has any reason code, (for example, L, H, or S) the leakrate should be considered unreliable.

4.8 The RCS leak rate calculation should not be performed until 10 minutes have passed following pumping the PDTT.

4.9 The RCS must be maintained at steady state during the performance of the leak rate. Steady state is defined as:

- Power change less than one percent of rated Thermal Power
- RCS temperature change less than 2°F
- RCS pressure change less than 5 psig
- No change in letdown or makeup systems
- PRZR level change less than 2%
- No RCP standpipe fills

Init Verif

6.0 INSTRUCTIONS

6.1 General Instructions

NOTE:
- Summary of all RCS Leakage results will be recorded on Attachment 1.
- If RCS pressure and temperature are too unstable for an accurate computer calculation of RCS Leak Rate, a leak rate must be performed within 12 hours after establishment of steady state operation.
- Subsections 6.2, 6.3, and 6.4 may be performed simultaneously.

SI _____ 6.1.1 Notify Chemistry Department that calculation of RCS leak rate will be in progress and that all sampling operations will be stopped unless authorized by Shift Supervision.

SI _____ 6.1.2 Check VCT controller 1-CH-LCV-1115A, VCT LEVEL DIVERT, and verify that no RCS letdown flow is being diverted to the PDT.

SI _____ 6.1.3 Stop all makeup to the VCT.

SI _____ 6.1.4 Record the Total Other Identified Leakage Excluding PRT and PDTT from the last (most recent previously calculated leak rate data) performance of 1-OPT-RC-10.0, Reactor Coolant Leakage - Computer Calculated, or 1-OPT-RC-10.01, Reactor Coolant Leakage - Manually Calculated, or from Computer Point YLR0002K, on Attachment 1.

6.1.5 Calculate the current Total Other Identified Leakage (excluding the PRT and the PDTT).

SI _

a. Identify and list current Other Identified Leakage (excluding PRT and PDTT) on Attachment 2.

SI _____

b. Add the other identified leakage (excluding PRT and PDTT) and record the current Total Other Identified Leakage in Attachment 2 and Attachment 1.

SI _

6.1.6 Compare values of Total Other Identified Leakage (excluding PRT and PDTT) for last and present performance of 1-OPT-RC-10.0 or 1-OPT-RC-10.01.

N/A SI

6.1.7 IF the amount of Total Other Identified Leakage (excluding PRT and PDTT) recorded in Attachment 1 has changed from the value recorded from last (most recent previously calculated leak rate data) performance of 1-OPT-RC-10.0 or 1-OPT-RC-10.01, THEN notify the Operations Manager on Call before continuing this procedure. Otherwise, enter N/A.

6.2 Computer Calculation of RCS Leak Rate

NOTE: The RCS leak rate calculation should not be performed until 10 minutes have passed following pumping the PDTT.

_____ 6.2.1 Verify that the PDTT level is between 40% and 46%. (Reference 2.3.10)

_____ 6.2.2 Verify that RCS Pressure is greater than 2100 psig and less than 2500 psig.

_____ 6.2.3 Verify that Pressurizer level is between 20% and 75%.

_____ 6.2.4 IF necessary to stabilize charging flow, THEN place 1-CH-FCV-1122, CHG FLOW CNTRL, in Manual, and control PRZR level at programmed setpoint. Otherwise, enter N/A.

6.2.5 Determine the Pressurizer Relief Tank (PRT) Inleakage by performing the following. **(Reference 2.4.3)**

_____ a. IF a previously calculated value of PRT inleakage is to be used for the PCS calculation, THEN enter N/A for Substep 6.2.5.b below. IF the previously calculated value of PRT inleakage is NOT being used, THEN enter N/A for this substep.

b. Perform the following Substeps for the manual calculation of the PRT leakrate.

_____ 1. Verify no makeups to the PRT, draining of the PRT, or pressurizer PORV openings will be performed during the trending of the PRT Level (L0485A) on the PCS plant computer or by reviewing the

N/A SI

4. Record the final time and PRT Level at the end of the addressable point L0485A trend in Attachment 3, Table 1: Calculation of PRT Level Change.

5. Calculate Elapsed Time in Attachment 3, Table 1: Calculation of PRT Level Change.

6. Using 1-DRP-003, convert PRT levels(%) to lbm and record in Attachment 3, Table 1: Calculation of PRT Level Change. (Using closest table entry to indicated level is acceptable.) Calculate the change in PRT level (lbm) and record in Attachment 3, Table 1: Calculation of PRT Level Change.

7. IF the PRT inleakage is less than zero, THEN record zero for the PRT Level Change.

8. Determine the PRT inleakage in lbm/min by performing Attachment 3, Table 2, PRT Leak Rate Calculation (lbm/minute) for the PRT.

9. Convert the PRT inleakage in lbm/min to gpm by performing Attachment 3, Table 3, Conversion to gpm.

G2.1 SI

6.2.6 Open the Leak Rate Program on the PCS plant computer.

NOTE: Routine daily leak rate determinations should be performed over a minimum time period of two hours. Backup leak rate should be performed over a minimum time period of 30 minutes.

SI 6.2.9 Verify entered or enter the calculated PRT leakrate (U9130).

PRT leakrate entered 0 gpm

NOTE: The PCS plant computer will automatically display the leak rate program results at the end of the selected time period noted in Step 6.2.7.

Any evolution that changes level in the PDTT (for example, draining the PRT, making up to the RCP Vapor Seal Tank, or cycling of the Gas Stripper) may negate the validity of this OPT.

SI 6.2.10 Depress the START button on the Leak Rate Display to activate the leak rate program on the PCS computer.

N/A SI 6.2.11 IF at any time the PCS RCS Leak Rate program needs to be halted by the operator, THEN click the STOP button. Otherwise enter N/A.

_____ 6.2.12 Evaluate unidentified RCS leak rate result and perform the actions indicated in the table below. Enter N/A for the condition that does not exist, or if the unidentified RCS leak rate is positive.

Evaluation of RCS Leakrate

Unidentified RCS Leakrate:	Actions to be taken:	Initials
With a negative Unidentified leakrate greater than -0.08 gpm	a. REPEAT Steps 6.2.7 through 6.2.12 to obtain valid unidentified RCS Leak Rate Calculation. b. IF a valid Unidentified RCS Leak Rate calculation can not be obtained, THEN perform a manual Leak Rate IAW 1-OPT-RC-10.01. (Reference 2.3.6)	_____ _____
With a negative Unidentified		

_____ 6.2.14 Print and attach the PCS computer printout leak rate program results to this procedure as a permanent record of the derivation of the RCS Leak rates recorded in Step 6.2.13.

_____ 6.2.15 Verify one PDTT pump is in AUTO.

6.2.16 IF charging flow control was placed in Manual in Step 6.2.4, THEN do the following. Otherwise, enter N/A.

_____ a. Verify or adjust CHG flow to maintain PRZR level at programmed setpoint.

_____ b. Place 1-CH-FCV-1122, CHG FLOW CNTRL, in Auto.

6.3 Calculation of the Containment Sump Inleakage Rate

NOTE:
- The Containment Sump Inleakage Rate is not required by the Surry Technical Specifications and is being determined for information only.
- The same Containment sump level instrument should be used to determine both the initial and final Containment sump indicated levels.
- CTMT Sump inleakage rate will be calculated using Attachment 4.
- This Subsection is not required if performing a backup leak rate.

_____ 6.3.1 IF it is desired to pump down the Containment Sump, THEN place one of the following sump pumps in HAND and verify pump starts. Otherwise, enter N/A.

____ 1-DA-P-4A, CTMT Sump Pump 4A

____ 1-DA-P-4B, CTMT Sump Pump 4B

_____ 6.3.2 IF desired, THEN place control switches for 1-DA-P-4A and 1-DA-P-4B, CTMT SUMP PUMPs, in OFF. Otherwise, enter N/A.

_____ 6.3.3 Record the required initial data for calculating the Containment sump inleakage rate. (Attachment 4, Table 1 - Containment Sump Inleakage Rate, Column 3)

_____ 6.3.4 Record the required final data for calculating the Containment sump inleakage rate. (Attachment 4, Table 1 - Containment Sump Inleakage Rate, Column 2)

_____ 6.3.5 Calculate the change in parameter from the initial start conditions to the final

_____ 6.3.8 Verify or place one CTMT sump pump in AUTO.

6.4 Primary to Secondary Leak Rate Verification

NOTE: This Subsection is not required if performing a backup leak rate.

_____ 6.4.1 Verify primary to secondary leakage through SG A and SG C is less than or equal to 100 gallons per day AND less than or equal to 20 gallons per day through SG B IAW either of the following. (✓) Enter N/A for this Subsection if RCS temperature is less than 200°F. **(Ref. 2.4.7)**

____ If Reactor power is greater than 25%, all N-16 Radiation Monitors are operable

____ If Reactor power is less than or equal to 25%, OR any N-16 Radiation Monitor is inoperable, Chemistry has verified leakage IAW 0-CPT-SG-003, Steam Generator Primary to Secondary Leakage, if stable RCS conditions exist.

NOTE: Primary to secondary leakage determination through each SG is required every 72 hours. If an SG N-16 Radiation Monitor is inoperable, sampling will be used to determine this leak rate.

_____ 6.4.2 Record primary to secondary leakage from each SG below. Enter N/A for SG(s) if N-16 monitor inoperable.

- SG A _____ gpd
- SG B _____ gpd
- SG C _____ gpd

6.5 Leak Rate Evaluation and Trending

NOTE:
- The Leakrate spreadsheet is located at S:\SURRY PWR STA\3\Data1\Ops\Leakrate\1-OPT-RC-10.0.xls. Backup leakrates are to be entered in "Backup Statistics" tab of spreadsheet, if applicable.
- This Subsection is not required if performing a backup leak rate.

_____ 6.5.1 Update 1-OPT-RC-10.0 Data Entry tab in 1-OPT-RC-10.0 spreadsheet with DAILY primary leak rate, primary to secondary leak rate, and sump in-leakage information.

NOTE: The 'Daily Leakage Graphs" provides trends for all parameters.

_____ 6.5.2 Review leakage trends in 1-OPT-RC-10.0 spreadsheet.

NOTE:
- The following information is determined by 1-OPT-RC-10.0 spreadsheet in "Daily Statistics" tab with Yellow representing Action Level 1, Orange representing Action Level 2, and Red representing Action Level 3. If all Action Level cells are Green, then all criteria is satisfactory.
- The OPT-RC-10.0 spreadsheet Action Level criteria is not subject to change and does not need to have the revision number verified. Changes will be made to the baseline mean unidentified leak rate and baseline standard deviation of unidentified leak rate by Engineering following Refueling outages and as required.

_____ 6.5.3 IF any of the following criteria apply to the unidentified leakage, THEN initiate 1-OP-RC-014. Otherwise, enter N/A.

Action Level 1

____ One seven day rolling average of Unidentified RCS Leak Rate greater than 0.1 gpm

____ Nine consecutive daily Unidentified RCS Leakrates greater than baseline mean

Action Level 2

____ Two consecutive daily Unidentified RCS Leakrates greater than 0.15 gpm.

G2.1

____ Two of Three consecutive daily Unidentified RCS Leakrates greater than mean + 2 standard deviations

Action Level 3

7.0 FOLLOW-ON

7.1 Acceptance Criteria

_____ 7.1.1 Evaluate the test results by reviewing the following Acceptance Criteria. (✓)

_____ The Unidentified Leakage Rate is less than or equal to 1.0 gpm.

_____ The Total Identified Leakage Rate is less than or equal to 10.0 gpm.

_____ Primary to secondary leakage through each Steam Generator is being monitored IAW 0-CPT-SG-003, OR is less than or equal to 100 gallons per day through SG A and SG C AND less than or equal to 20 gallons per day through SG B as determined by N-16 Radiation Monitors **(Ref. 2.4.7)**

_____ 7.1.2 Document the test results. (✓)

___ Satisfactory ___ Unsatisfactory

7.2 Follow-On Tasks

7.2.1 IF the test was unsatisfactory, THEN perform the following actions. Otherwise, enter N/A.

_____ a. Document the reason for the unsatisfactory test in Operator Comments.

_____ b. Notify System Engineering of unsatisfactory conditions and record the name of the person notified.

_____ d. Initiate a Condition Report and record the number below.

CR No. _____

_____ e. Initiate the use of 1-AP-16.00, Excessive RCS Leakage.

_____ 7.2.2 IF a partial operability test was performed, THEN document the reason for the partial test in Operator Comments. Otherwise, enter N/A.

7.3 **Notification, Documentation, and Procedure Closeout**

_____ 7.3.1 Notify Shift Supervision that the test is complete.

_____ 7.3.2 Document Leak Rate results in Unit 1 Narrative Logs.

The Initials in this procedure will be identified by the Printed Name.

Initials	Printed Name

Operator Comments: _____

G2.1

7.4 Review

Comments: _____

_____

_____

_____

_____

_____

_____

_____

_____

_____

_____

Reviewed by: _____ Date: _____
Shift Supervision

Forward original procedure to Station Records.

(Page 1 of 1)

Attachment 1

SUMMARY OF REACTOR COOLANT LEAK RATE TEST RESULTS AND CONTAINMENT SUMP INLEAKAGE

Summary of Reactor Coolant Leak Rate Test Results			
RCS Leak Rate Data	Identified leakage from the LAST (most recent previously calculated leak rate data) performance of 1-OPT-RC-10.0 or 1-OPT-RC-10.1, as appropriate	**Current** values:	
Total OTHER Identified Leakage:	(gpm)	(gpm)	
Total Unidentified RCS Leak Rate:		(gpm)	
Identified RCS Leak Rate:		(gpm)	
Total RCS Leak Rate:		(gpm)	

CTMT Sump Inleakage
CTMT Sump Inleakage Rate: _____ (gpm)

(Page 1 of 1)

Attachment 2
DETERMINATION OF TOTAL OTHER IDENTIFIED LEAKAGE EXCLUDING PRT AND PDTT

NOTE: The date column corresponds to the date on which the leak was discovered.

NOTE: Leakage from Safety Injection Accumulators to the PDTT may result in a lower than actual unidentified leak rate.

Total Other Identified Leakage (excluding PRT and PDTT)		
Source	Leak Rate (gpm)	Date

Add all the leak rates recorded above in the leak rate column and record the total below as the RCS Total Other Identified Leak Rate.

RCS Total Other Identified Leak Rate =_____GPM

(Page 1 of 1)

Attachment 3
CALCULATION OF PRT LEAKAGE RATE

Table 1: Calculation of PRT Level Change			
Parameter	Final Value of Parameter at End Time	Initial Value of Parameter at Start Time	Change in Parameter (+ or -) (Final Value - Initial Value)
Elapsed Time	End Time:	Start Time:	Minutes:
PRT Level % (L0485A)			
PRT Level (lbm) use 1-DRP-003			(± lbm)

Table 2, PRT Leak Rate Calculation (lbm/minute)		
PRT Level Change (lbm)	Divide by Change in Time (minutes)	Equals Leak rate (lbm / minute)

G2.1

Table 3, Conversion to gpm		
Parameter	Conversion Factors *	Leak Rate (gpm)
PRT Leak Rate (lb_m / minute)	Multiply leak rate by: 7.48052 gallons / ft^3 Divided by 61.856 lb_m / ft^3 (VCT Conditions)	

* VCT conditions for Makeup Water to RCS: Density = 61.856 lb_m/ft^3 @ 110°F and 15 psia.

(Page 1 of 1)

Attachment 4
CALCULATION OF THE CONTAINMENT SUMP INLEAKAGE RATE

Table 1 - Containment Sump Inleakage Rate			
Parameter being analyzed	Column 2 Final Value of Parameter at End of Time	Column 3 Initial Value of Parameter at Start of Time	**Change in Parameter (+ or -) (final value − initial value)
Elapsed Time			(MINUTES)
CTMT Sump Level instrument used: 1-DA-LI-100, 1-DA-LI-110A or 1-DA-LI-110B	Circle instrument used 1-DA-LI-100, 1-DA-LI-110A or 1-DA-LI-110B	Circle instrument used: 1-DA-LI-100, 1-DA-LI-110A or 1-DA-LI-110B	N / A
CTMT Sump Level	(% or IN)	(% or IN)	N / A
CTMT Sump Volume from curve in 1-DRP-003	(gallons)	(gallons)	(gallons)

**A ± value in the change in parameter column indicates an increase or decrease in the respective parameter.

Table 2 - Containment Sump Inleakage Rate		
Change in Parameter (±) (final value − initial value)	Divide by Elapsed Time	Sump Inleakage Rate
CTMT Sump Volume Change _____ (gallons)	(Minutes)	(gpm)

(Page 1 of 1)

Attachment 5
COMPUTER POINTS ASSOCIATED WITH LEAK RATE

PCS Computer Pt ID	Description
K2051	Atmospheric Pressure
L0112A	Volume Control Tank Level
L0480A	Pressurizer Level CH1 (L459)
L0481A	Pressurizer Level CH2 (L460)
L0482A	Pressurizer Level CH3 (L461)
P0480A	PZR Pressure CH1 (P455)
P0481A	PZR Pressure CH2 (P456)
P0482A	PZR Pressure CH3 (P457)
T0400A	RC Loop A TAVE CH1 (T412)
T0420A	RC Loop B TAVE CH2 (T422)
T0440A	RC Loop C TAVE CH3 (T432)
Y4020A	Primary Drains Tank Level
U9130	Rolling PRT Leak Rate (gpm)
U9133	Unidentified Leak Rate (gpm)
U9134	Identified Leak Rate (gpm)
U9135	RCS Total Leak Rate (gpm)
U9136	Unidentified Leak Rate (lbm/min)
U9137	Identified Leak Rate (lbm/min)
U9138	RCS Total Leak Rate (lbm/min)

U.S. Nuclear Regulatory Commission
Surry Power Station

SR10301
Administrative Job Performance Measure 2.1.23

Applicant_____ Start Time_____

Examiner_____

Date _____ Stop Time_____

Title

COMPLETE 1-OPT-RC-10.0, REACTOR COOLANT LEAKAGE – COMPUTER CALCULATED

K/A: G2.1.23 – Ability to perform specific system and integrated plant procedure during all modes of plant operation. (4.3/4.4)

Applicability	**Est Completion Time**	**Actual Time**
RO	40 Minutes	_____

Conditions

- Task is to be PERFORMED in the SIMULATOR or CLASSROOM.
- Performance of 1-OPT-RC-10.0, Reactor Coolant Leakage – Computer Calculated, is required.

Standards

- Completes the remaining portions of 1-OPT-RC-10.0, Reactor Coolant Leakage – Computer Calculated, and determines that the procedure was unsatisfactory.

Initiating Cues

- Given simulated plant conditions, perform the remainder of 1-OPT-RC-10.0, Reactor Coolant Leakage – Computer Calculated, and submitted the

procedure for review by the Unit Supervisor.

Initial Conditions

- It is mid-shift on May 22, 2010. Unit 1 power is 100 percent.
- I am the Nuclear Shift Manager. I have assigned you to complete the normal daily 1-OPT-RC-10.0, Reactor Coolant Leakage – Computer Calculated. The procedure is complete up through Step 6.2.11 and the computer generated leak rate data sheet has just been printed out, the leak rate ran for 125 minutes. You are to complete 1-OPT-RC-10.0, Reactor Coolant Leakage – Computer Calculated it is entirety and when done turn the procedure in for review.

- The following are the Unit conditions:
  - Reactor power: 100%
  - Charging flow control is in automatic.
  - One PDTT pump was placed in automatic after the PCS computer leak rate program results were printed.
  - Containment Sump Data:
    - Initial containment sump level was 47% as indicated on 1-DA-LI-100
    - Final containment sump level was 62% as indicated on 1-DA-LI-100.
    - Containment Sump leak rate elapsed time – 60 minutes.
    - After this data was recorded, one containment sump pump was placed back in automatic

  Primary to Secondary Leakage exists and is known and has been indicating in the 15 – 25 gpd range per steam generator for the past week. Today the N-16 monitors are slightly elevated and indicate the following:
  SG A: 24.4 gpd
  SG B: 22.1 gpd
  SG C: 25.6 gpd

  The Leakrate spreadsheet is located at folder S:\SURRY PWR STA\3\Ops\Leakrate on the desktop of your laptop computer.

- Here is a partially completed copy of 1-OPT-RC-10.0, Reactor Coolant Leakage – Computer Calculated. I need you to complete 1-OPT-RC-10.0, Reactor Coolant Leakage – Computer Calculated it is entirety and when done turn the procedure in for review.

- When you are ready to have your work reviewed, please inform me, as this will end the JPM.

Terminating Cues

- 1-OPT-RC-10.0 has been completed and is ready to be reviewed.

Procedures

- 1-OPT-RC-10.0, Reactor Coolant Leakage – Computer Calculated (Revision 33)

Tools and Equipment

- Calculator
- RCS Leakrate Spreadsheet
- Large Stapler

Safety Considerations

- None

Notes

Performance Checklist

Notes to the Evaluator.

- Task critical elements are bolded and noted by the words “Critical Step” at the end of the step.
- **START TIME:**

STEP 1: 3.0 INITIAL CONDITIONS Notes prior to Step 3.1 • Reactor Coolant System (RCS) temperature and pressure stability for the purposes of this procedure shall be determined by Shift Supervision. • An RCS water inventory balance must be performed once every 24 hours. Surveillance requirement specified time intervals may be adjusted plus or minus 25% to accommodate normal test schedules. • If required RCS pressure conditions cannot be met, 1-OPT-RC-10.01, Reactor Coolant Leakage – Manually Calculated, must be performed. 3.1 Verify that the Reactor Coolant System is being maintained at stable temperature and pressure. 3.2 Verify that Reactor Coolant System Pressure is greater than 2100 psig and less than 2500 psig. **STANDARD:** (a) Acknowledges/Reviews the Initial Conditions. **EVALUATOR’S NOTE:** • None **COMMENTS:**	_____ **SAT** _____ **UNSAT**

STEP 2: 4.0 PRECAUTIONS AND LIMITATIONS 4.1 The RCS leak rate program on the PCS plant computer will halt if VCT level increases by 2.0%, if PDTT level decreases by 1.0%, or if PRZR level changes (increases or decreases) by 2.0% during the performance of the program. 4.2 Routine daily leak rate determinations should be performed over a minimum time period of two hours, when a computer calculation of the RCS leak rate is performed. 4.3 Reactor Coolant System sampling should **not** take place during the performance of this procedure. 4.4 RCS temperature and pressure should be maintained as stable as possible when a RCS leak rate calculation is being performed during a pause in a Reactor Coolant System (RCS) heat up or cool down. 4.5 A leak rate based on an RCS water inventory balance is required once every 24 hours, but is not required to be completed until 12 hours after establishment of steady state operation. (stable pressure, temperature, power level, Pressurizer and makeup tank levels, makeup and letdown, and RCP seal injection and return flow) Refer to Tech Spec 4.13, SR 4.13.A. 4.6 The initials identification block in Subsection 7.3 must be completed before this procedure is closed out. 4.7 If any one data point from the leakrate printout or the final leakrate results are marked with POOR or BAD, or has any reason code, (for example, L, H, or S) the leakrate should be considered unreliable. 4.8 The RCS leak rate calculation should not be performed until 10 minutes have passed following pumping the PDTT. 4.9 The RCS must be maintained at steady state during the performance of the leak rate. Steady state is defined as: • Power change less than one percent of rated Thermal Power • RCS temperature change less than 2°F • RCS pressure change less than 5 psig • No change in letdown or makeup systems • PRZR level change less than 2% • No RCP standpipe fills	_____ **SAT** _____ **UNSAT**

4.10 Any evolution that changes level in the PDTT (for example, draining the PRT, making up to the RCP Vapor Seal Tank, or cycling of the Gas Stripper) may negate the validity of this OPT. **STANDARD:** (a) Acknowledges/Reviews the Precautions and Limitations. **EVALUATOR'S NOTE:** • None **COMMENTS:**	

STEP 3:

Reviews completed procedure Section 6.1 and procedure Section 6.12 up to Step 6.2.12.

STANDARD:

(a) Acknowledges procedure status up to Step 6.2.12.

EVALUATOR'S NOTE:

- None

COMMENTS:

_____ **SAT**

_____ **UNSAT**

STEP 4:

Step 6.2.12:

6.2.12 Evaluate unidentified RCS leak rate result and perform the actions indicated in the table below. Enter N/A for the condition that does not exist, or if the unidentified RCS leak rate is positive

Evaluation of RCS Leakrate

Unidentified RCS Leakrate:	**Actions to be taken:**	**Initials**
With a negative Unidentified leakrate greater than -0.08 gpm	a. REPEAT steps 6.2.7 through 6.2.12 to obtain valid unidentified RCS Leak Rate Calculation. b. IF a valid Unidentified RCS Leak Rate calculation cannot be obtained, THEN perform a manual leak rate IAW 1-OPT-RC-10.0	_____ _____
With a negative Unidentified leakrate less than or equal to -0.08 gpm	a. Enter zero for unidentified RCS leak rate. b. Adjust total leak rate fto equal to the identified leak rate. c. Make a comment in the Operator Comments in Subsection 7.3.	_____ _____ _____

_____ **SAT**

_____ **UNSAT**

STANDARD: (a) Marks the Initial Column Lines as “N/A”. **EVALUATOR’S NOTE**: • None. **COMMENTS:**	

STEP 5:

Step 6.2.13

6.2.13 Record the Total, Unidentified, and Identified RCS leak rates (gpm) in Attachment 1. Use results from Step 6.2.12 if performed, otherwise use computer printout results.

_____ **SAT**

_____ **UNSAT**

STANDARD:

(a) Proceeds to Attachment 1 to record data from RCS Leak Rate Printout.

EVALUATOR'S NOTE:

Summary of Reactor Coolant Leak Rate Test Results			
RCS Leak Rate Data	Identified leakage from the LAST (most recent previously calculated leak rate data) performance of 1-OPT-RC-10.0 or 1-OPT-RC-10.1, as appropriate	Current values:	
Total OTHER Identified Leakage:	0 (gpm)	0 (gpm)	
Total Unidentified RCS Leak Rate:		0.13 (gpm)	
Identified RCS Leak Rate:		0.15 (gpm)	
Total RCS Leak Rate:		0.28 (gpm)	

COMMENTS:

STEP 6: Step 6.2.14 6.2.14 Print and attach the PCS computer printout leak rate program results to this procedure as a permanent record of the derivation of the RCS Leak rates recorded in Step 6.2.13. **STANDARD:** (a) Acknowledges and signs this Step. **EVALUATOR'S NOTE:** • None **COMMENTS:**	_____ **SAT** _____ **UNSAT**
STEP 7: Step 6.2.15 6.2.15 Verify one PDTT pump is in AUTO. **STANDARD:** (a) Recalls from initial conditions that one PDTT pump is in Automatic. **EVALUATOR'S NOTE:** • None **COMMENTS:**	_____ **SAT** _____ **UNSAT**

STEP 8: Step 6.2.16 6.2.16 IF charging flow control was placed in Manual in Step 6.2.4, THEN do the following. Otherwise, enter N/A. a. Verify or adjust CHG flow to maintain PRZR level at programmed setpoint. b. Place 1-CH-FCV-1122, CHG FLOW CNTRL, in Auto. **STANDARD:** (a) Recalls from initial conditions that charging flow control is in Automatic and marks this step as N/A. **EVALUATOR'S NOTE:** • Candidate will proceed to Section 6.3. **COMMENTS:**	_____ **SAT** _____ **UNSAT**
STEP 9: Reviews procedure Section 6.3 up to Step 6.3.2. **STANDARD:** (a) Acknowledges procedure status up to Step 6.3.2 and that these steps have been signed off as completed. **EVALUATOR'S NOTE:** • None **COMMENTS:**	_____ **SAT** _____ **UNSAT**

STEP 10:

Step 6.3.3

6.3.3 Record the required initial data for calculating the Containment Sump in-leakage rate (Attachment 4, Table 1 – Containment Sump In Leakage Rate, Column 3).

_____ **SAT**

_____ **UNSAT**

STANDARD:

(a) Recalls from initial conditions that initial containment sump level was 47%.
(b) Records initial containment sump level in Attachment 4.

EVALUATOR'S NOTE:

Table 1 – Containment Sump In Leakage Rate

Parameter being analyzed	Column 2	Column 3	
	Final Value of Parameter at END of Time	Initial Value of Parameter at START of Time	** Change in Parameter (+ or -) (final value – initial value)
Elapsed Time	65 minutes ago	125 minutes ago	60 (Minutes)
CTMT Sump Level instrument used: 1-DA-LI-100, 1-DA-LI-110A, or 1-DA-LI-110B	Circle instrument used 1-DA-LI-100, 1-DA-LI-110A, or 1-DA-LI-110B	Circle instrument used 1-DA-LI-100, 1-DA-LI-110A, or 1-DA-LI-110B	N/A
CTMT Sump Level	(% or IN)	47 (% or IN)	N/A
CTMT Sump Volume from curve in 1-DRP-003	(gallons)	(gallons) 34.6465	(gallons)

Elapsed time will be filled in as an initial condition.
If candidate uses chart to determine containment volume:
Answer: 34.6465 [range 34.6465 – 35 gallons]

If candidate uses graph to determine containment volume:

Answer: 35 gallons [range 34 – 36 gallons] **COMMENTS:**	

STEP 11:

Step 6.3.4

6.3.4 Record the required final data for calculating the Containment Sump in-leakage rate (Attachment 4, Table 1 – Containment Sump In Leakage Rate, Column 2).

STANDARD:

(a) Recalls from initial conditions that final containment sump level was 62%.
(b) Records final containment sump level in Attachment 4.

EVALUATOR'S NOTE:

Table 1 – Containment Sump In Leakage Rate

Parameter being analyzed	Column 2	Column 3	
	Final Value of Parameter at END of Time	Initial Value of Parameter at START of Time	** Change in Parameter (+ or -) (final value – initial value)
Elapsed Time	65 minutes ago	125 minutes ago	60 (Minutes)
CTMT Sump Level instrument used: 1-DA-LI-100, 1-DA-LI-110A, or 1-DA-LI-110B	Circle instrument used 1-DA-LI-100, 1-DA-LI-110A, or 1-DA-LI-110B	Circle instrument used 1-DA-LI-100, 1-DA-LI-110A, or 1-DA-LI-110B	N/A
CTMT Sump Level	62 (% or IN)	47 (% or IN)	N/A
CTMT Sump Volume from curve in 1-DRP-003	(gallons) 39.439	(gallons) 34.6465	(gallons)

Elapsed time will be filled in as an initial condition.
If candidate uses chart to determine containment volume:
Answer: 39.439 [range 39 – 39.439 gallons]

If candidate uses graph to determine containment volume:

_____ **SAT**

_____ **UNSAT**

Answer: 39 gallons [range 38 – 40 gallons] **COMMENTS:**	

STEP 12:

Step 6.3.5

6.3.5 Calculate the change in parameter from the initial start conditions to the final end conditions and record the elapsed time in Table 2 – Containment Sump In-leakage Rate. (Attachment 4).

STANDARD:

(a) Calculated the difference in containment sump volume. This is a critical step.

(b) Records difference in containment sump level in Attachment 4.

EVALUATOR'S NOTE:

Table 1 – Containment Sump In Leakage Rate			
Parameter being analyzed	Column 2	Column 3	
	Final Value of Parameter at END of Time	Initial Value of Parameter at START of Time	** Change in Parameter (+ or -) (final value – initial value)
Elapsed Time	65 minutes ago	125 minutes ago	60 (Minutes)
CTMT Sump Level instrument used: 1-DA-LI-100, 1-DA-LI-110A, or 1-DA-LI-110B	Circle instrument used 1-DA-LI-100, 1-DA-LI-110A, or 1-DA-LI-110B	Circle instrument used 1-DA-LI-100, 1-DA-LI-110A, or 1-DA-LI-110B	N/A
CTMT Sump Level	62 (% or IN)	47 (% or IN)	N/A
CTMT Sump Volume from curve in 1-DRP-003	(gallons) 39.439	(gallons) 34.6465	(gallons) 4.7925

Elapsed time will be filled in as an initial condition.
If candidate uses chart to determine containment volume:
Answer: 4.7925 [range 4 – 5 gallons]

If candidate uses graph to determine containment volume:
Answer: 4 gallons [range 2 – 6 gallons]

_____ **SAT**

_____ **UNSAT**

Table 2 – Containment Sump In Leakage rate		
Change in Parameter (+/-) (final value – initial value)	Divided by Elapsed Time	Sump In Leakage rate
CTMT Sump Volume Change 4.7925 (gallons)	(minutes) 60	(gpm)

Elapsed time will be filled in as an initial condition.

COMMENTS:

STEP 13:

Step 6.3.6

6.3.6 Calculate the total Containment Sump In Leakage Rate in gallons per minute. (Attachment 4, Table 2 – Containment Sump In Leakage Rate).

STANDARD:

(a) Calculates the containment sump in leakage rate in gallons per minute. This is a critical step.

(b) Records containment sump in leakage rate in Attachment 4.

EVALUATOR'S NOTE:

Table 2 – Containment Sump In Leakage rate		
Change in Parameter (+/-) (final value – initial value)	Divided by Elapsed Time	Sump In Leakage rate
CTMT Sump Volume Change 4.7925 (gallons)	(minutes) 60	(gpm) 0.08

If candidate uses chart to determine containment volume:
Answer: 0.0798754 gpm [range 0.06 – 0.083 gpm]

If candidate uses graph to determine containment volume:
Answer: 0.06667 gpm [range 0.03 – 0.1 gallons]

COMMENTS:

_____ **SAT**

_____ **UNSAT**

STEP 14:

Step 6.3.7

6.3.7 Transfer the Containment Sump In Leakage Rate from Attachment 4, Table 2 – Containment Sump In Leakage Rate, to Attachment 1.

STANDARD:

(a) Records containment sump in leakage rate on Attachment 1.

EVALUATOR'S NOTE:

Summary of Reactor Coolant Leak Rate Test Results			
RCS Leak Rate Data	Identified leakage from the LAST (most recent previously calculated leak rate data) performance of 1-OPT-RC-10.0 or 1-OPT-RC-10.1, as appropriate	Current values:	
Total OTHER Identified Leakage:	0 (gpm)	0 (gpm)	
Total Unidentified RCS Leak Rate:		0.13 (gpm)	
Identified RCS Leak Rate:		0.15 (gpm)	
Total RCS Leak Rate:		0.28 (gpm)	

CTMT Sump In Leakage
CTMT Sump In Leakage Rate:_____0.08____ (gpm)

If candidate uses chart to determine containment volume:
Answer: 0.0798754 gpm [range 0.06 – 0.083 gpm]

If candidate uses graph to determine containment volume:
Answer: 0.06667 gpm [range 0.03 – 0.1 gallons]

_____ **SAT**

_____ **UNSAT**

COMMENTS:	

STEP 15: Step 6.3.8 6.3.8 Verify or place one CTMT sump pump is in AUTO. **STANDARD:** (a) Recalls from initial conditions that one CTMT sump pump is in Automatic. **EVALUATOR'S NOTE:** • None **COMMENTS:**	_____ **SAT** _____ **UNSAT**
STEP 16: Step 6.4 Note prior to Step 6.4.1: • This Subsection is not required if performing a backup leak rate. **STANDARD:** (a) Acknowledges the note. **EVALUATOR'S NOTE:** • None **COMMENTS:**	_____ **SAT** _____ **UNSAT**

STEP 17: Step 6.4.1 6.4.1 Verify primary to secondary leakage through SG A and SG C is less than or equal to 100 gallons per day AND less than or equal to 20 gallons per day through SG B IAW either of the following. Enter N/A for this subsection if RCS temperature is less than 200 °F. _____ If Reactor power is greater than 25%, all N-16 Radiation Monitors are operable. _____ If Reactor power is less than or equal to 25%, OR any N-16 Radiation Monitor is inoperable, Chemistry has verified leakage IAW 0-CPT-SG-003, Steam Generator Primary to Secondary Leakage, if stable RCS conditions exist. **STANDARD:** (a) Acknowledges that reactor power is greater than 25% and that SG B is greater than 20 gallons per day. **EVALUATOR'S NOTE:** • None **COMMENTS:**	_____ **SAT** _____ **UNSAT**
STEP 18: Note prior to Step 6.4.2: • Primary to secondary leakage determination through each SG is required every 72 hours. If an SG N-16 Radiation Monitor is inoperable, sampling will be used to determine this leak rate. **STANDARD:** (a) Acknowledges the note. **EVALUATOR'S NOTE:**	_____ **SAT** _____ **UNSAT**

• None **COMMENTS:**	

STEP 19: Step 6.4.2 6.4.2 Record primary to secondary leakage from each SG below. Enter N/A for SG(s) if N-16 monitor inoperable. • SG A _____ gpd • SG B _____ gpd • SG C _____ gpd **STANDARD:** (a) Records the values from the initial conditions as indicated below • SG A 24.4 gpd • SG B 22.1 gpd • SG C 25.6 gpd **EVALUATOR'S NOTE:** • None **COMMENTS:**	_____ **SAT** _____ **UNSAT**
STEP 20: Step 6.4.3 6.4.3 If any N-16 inoperable, AND RCS is in a stable condition to perform leakrate, THEN notify Chemistry AND record person notified and date/time below. Otherwise, enter N/A. **STANDARD:** (a) Records N/A for this step. **EVALUATOR'S NOTE:** • None	_____ **SAT** _____ **UNSAT**

COMMENTS:	

STEP 21: Step 6.5 Notes prior to Step 6.5.1: • The Leakrate spreadsheet is located at S:\SURRY PWR STA\3\Data1\OPS\Leakrate\1-OPT-RC-10.0. Backup leakrates are to be entered in “Backup Statistics” tab of spreadsheet, if applicable. **STANDARD:** (a) Acknowledges the notes. **EVALUATOR’S NOTE:** • None **COMMENTS:**	_____ **SAT** _____ **UNSAT**

STEP 22:

Step 6.5.1

6.5.1 Update 1-OPT-RC-10.0 Data Entry tab in 1-OPT-RC-10.0 spreadsheet with Daily primary leak rate, primary to secondary leak rate, and sump in-leakage information.

_____ **SAT**

_____ **UNSAT**

STANDARD:

(a) Opens the leakrate spreadsheet and enters the required data.

EVALUATOR'S NOTE:

- Pre-data Entry

Date	Total (gpm)	Identified (gpm)	Unidentified (gpm)	Sump (gpm)	'A' (gpd)	'B' (gpd)	'C' (gpd)
05/15/10	0.240	0.150	0.090	0.140	24.200	15.200	25.400
05/16/10	0.220	0.120	0.110	0.130	24.400	15.300	25.400
05/17/10	0.250	0.150	0.100	0.130	24.200	14.800	25.600
05/18/10	0.230	0.130	0.090	0.130	24.300	14.900	25.100
05/19/10	0.230	0.140	0.100	0.130	24.500	15.200	25.300
05/20/10	0.250	0.160	0.090	0.130	24.200	15.300	25.700
05/21/10	0.250	0.160	0.090	0.130	24.400	15.200	25.400

	Action Level 1			Action Level 2		Action Level 3	
Date	Unident. Leakage (gpm)	7 Day Average Unidentified Leak Rate > .1 gpm	9 last Consecutive Unidentified Leak Rates > baseline mean	2 Consecutive Unidentified Leak Rates >.15 gpm	2 of 3 consecutive Unidentified Leak Rates > baseline mean + 2 standard deviations	Unident. Leak Rate > baseline mean + 3 standard deviations	Unident. Leak Rate >.3 gpm
05/21/10	0.090	0	0	0	0	0	0
05/20/10	0.090	0	0	0	0	0	0
05/19/10	0.100	0	0	0	0	0	0

05/18/10	0.090	0	0	0	0	0	0
05/17/10	0.100	0	0	0	0	0	0
05/16/10	0.110	0	0	0	0	0	0
05/15/10	0.090	0	0	0	0	0	0

COMMENTS:

STEP 23:

Step 6.5.2

6.5.2 Review leakage trends in 1-OPT-RC-10.0 spreadsheet.

_____ **SAT**

_____ **UNSAT**

STANDARD:

(a) Reviews the trends for 5/22/10 and notes that B SG primary to secondary leakage is elevated and that the plant is in action level 1 for RCS leakage.

EVALUATOR'S NOTE:

- Post-data Entry

Date	Total (gpm)	Identified (gpm)	Unidentified (gpm)	Sump (gpm)	'A' (gpd)	'B' (gpd)	'C' (gpd)
05/15/10	0.240	0.150	0.090	0.140	24.200	15.200	25.400
05/16/10	0.220	0.120	0.110	0.130	24.400	15.300	25.400
05/17/10	0.250	0.150	0.100	0.130	24.200	14.800	25.600
05/18/10	0.230	0.130	0.090	0.130	24.300	14.900	25.100
05/19/10	0.230	0.140	0.100	0.130	24.500	15.200	25.300
05/20/10	0.250	0.160	0.090	0.130	24.200	15.300	25.700
05/21/10	0.250	0.160	0.090	0.130	24.400	15.200	25.400
05/22/10	**0.280**	**0.150**	**0.130**	**0.080**	**24.400**	**22.100**	**25.600**

	Action Level 1			Action Level 2		Action Level 3	
Date	Unident. Leakage (gpm)	7 Day Average Unidentified Leak Rate > .1 gpm	9 last Consecutive Unidentified Leak Rates > baseline mean	2 Consecutive Unidentified Leak Rates >.15 gpm	2 of 3 consecutive Unidentified Leak Rates > baseline mean + 2 standard deviations	Unident. Leak Rate > baseline mean + 3 standard deviations	Unident. Leak Rate >.3 gpm
5/22/10	**0.13**	**1**	**0**	**0**	**0**	**0**	**0**
05/21/10	0.090	0	0	0	0	0	0
05/20/10	0.090	0	0	0	0	0	0

05/19/10	0.100	0	0	0	0	0	0
05/18/10	0.090	0	0	0	0	0	0
05/17/10	0.100	0	0	0	0	0	0
05/16/10	0.110	0	0	0	0	0	0
05/15/10	0.090	0	0	0	0	0	0

COMMENTS:

STEP 24:

Notes prior to Step 6.5.3:

- The following information is determined by 1-OPT-RC-10.0 spreadsheet in "Daily Statistics" tab with Yellow representing Action Level 1, Orange representing Action Level 2, and Red representing Action Level 3. If all Action levels are Green, then all criteria is satisfied.
- The OPT-RC-10.0 spreadsheet Action Level criteria are not subject to change and do not need to have the revision number verified. Changes will be made to the baseline mean unidentified leak rate and baseline standard deviation of unidentified leak rate by Engineering following Refueling Outages and as required.

STANDARD:

(a) Acknowledges the Notes.

EVALUATOR'S NOTE:

- None

COMMENTS:

_____ **SAT**

_____ **UNSAT**

STEP 25: Step 6.5.3 6.5.3 IF any of the following criteria apply to the unidentified leakage, THEN initiate 1-OP-RC-014. Otherwise, enter N/A. Action Level 1 _____ One seven day rolling average of Unified RCS Leak Rate greater than 0.1 gpm. _____ Nine consecutive daily Unidentified RCS Leakrates greater than baseline mean. Action Level 2 _____ Two consecutive daily Unidentified RCS leakrates greater than 0.15 gpm. _____ Two of Three consecutive daily Unidentified RCS Leakrates greater than mean +2 standard deviations. Action Level 3 _____ One Unidentified RCS leakrates greater than 0.3 gpm. _____ One Unidentified RCS Leakrate greater than mean +3 standard deviations. STANDARD: **(a) Marks the step as follows:.** **Action Level 1:** **___X___ One seven day rolling average of Unified RCS Leak Rate greater than 0.1 gpm.** **_____ Nine consecutive daily Unidentified RCS Leakrates greater than baseline mean.** **This is a critical step.** EVALUATOR'S NOTE: • If asked, acknowledge the need to perform 1-OP-RC-014. State another operator	_____ **SAT** _____ **UNSAT**

will perform this procedure and to continue on with 1-OPT-RC-10.0 COMMENTS:	

STEP 26:

_____ **SAT**

_____ **UNSAT**

7.1 Acceptance Criteria.

7.1.1 Evaluate the test results by reviewing the following acceptance criteria.

_____ The Unidentified Leakage Rate is less than or equal to 1.0 gpm.
_____ The Total Identified Leakage Rate is less than or equal to 10.0 gpm.
_____ Primary to secondary leakage through each Steam Generator is being monitored IAW 0-CPT-SG-003, OR is less than or equal to 100 gallons per day through SG A and SG C AND less than or equal to 20 gallons per day through SG B as determined by N-16 Radiation Monitors

7.1.2 Document the test results.

_____ Satisfactory _____ Unsatisfactory

STANDARD:

(a) Completes this section as follows:

7.1.1 Evaluate the test results by reviewing the following acceptance criteria.

___X___ The Unidentified Leakage Rate is less than or equal to 1.0 gpm.
___X___ The Total Identified Leakage Rate is less than or equal to 10.0 gpm.
_____ Primary to secondary leakage through each Steam Generator is being monitored IAW 0-CPT-SG-003, OR is less than or equal to 100 gallons per day through SG A and SG C AND less than or equal to 20 gallons per day through SG B as determined by N-16 Radiation Monitors

7.1.2 Document the test results.

_____ Satisfactory ___X___ Unsatisfactory

This is a critical step. **EVALUATOR'S NOTE:** • Acknowledge the completion of the task. **COMMENTS:**	

STEP 27: 7.2 Follow on Tasks. 7.2.1 If the test was unsatisfactory, THEN perform the following actions. Otherwise, enter N/A. a. Document the reason for the unsatisfactory test in Operator Comments. b. Notify System Engineering of unsatisfactory conditions and record the name of the person notified. c. The system engineer will initiate an evaluation for license renewal of potential aging effects such as material or cracking. d. Initiate a Condition Report and record the number below. e. Initiate the use of 1-AP-16.00, Excessive RCS Leakage. 7.2.2 IF a partial operability test was performed, THEN document the reason for the partial test in Operator Comments. Otherwise, enter N/A. **STANDARD:** (a) The candidate will document that the test was performed unsat in the Operator Comments due to the primary to secondary leakage. May also note that the plant is in action level 1 and 1-OP-RC-014 is required. Words to the effect follow: "This PT was completed unsat due to primary to secondary leakage greater than 20 gpd on B SG." (b) Will inform the evaluator that system engineering needs to be notified, a CR will be required and that AP-16 will need to be evaluated. **EVALUATOR'S NOTE:** • System Engineer: Karlie F. Irwine **COMMENTS:**	_____ **SAT** _____ **UNSAT**

STEP 28: 7.3 Notification, Documentation and Procedure Closeout. 7.3.1 Notify Shift Supervision that the test is complete. 7.3.2 Document Leak Rate results in Unit 1 Narrative Logs. **STANDARD:** (a) Will inform the evaluator that the test is complete. (b) Will inform the evaluator that the leak rate needs to be documented. **EVALUATOR'S NOTE:** • None. **COMMENTS:**	_____ **SAT** _____ **UNSAT**

STOP TIME:

_____

_____

_____

_____

_____

_____

Operator Directions Handout
(TO BE READ TO APPLICANT BY EXAMINER)

Task

- Task is to be PERFORMED in the SIMULATOR or CLASSROOM.
- Given simulated plant conditions, perform the remainder of 1-OPT-RC-10.0, Reactor Coolant Leakage – Computer Calculated, and submitted the procedure for review by the Unit Supervisor.

Directions

The evaluator will explain the initial conditions of the task to be performed and will provide the initiating cue. Ensure you indicate to the evaluator when you understand your assigned task.

Initial Conditions

- It is mid-shift on May 22, 2010. Unit 1 power is 100 percent.
- I am the Nuclear Shift Manager. I have assigned you to complete the normal daily 1-OPT-RC-10.0, Reactor Coolant Leakage – Computer Calculated. The procedure is complete up through Step 6.2.11 and the computer generated leak rate data sheet has just been printed out, the leak rate ran for 125 minutes. You are to complete 1-OPT-RC-10.0, Reactor Coolant Leakage – Computer Calculated it is entirety and when done turn the procedure in for review.

- The following are the Unit conditions:
  - Reactor power: 100%
  - Charging flow control is in automatic.
  - One PDTT pump was placed in automatic after the PCS computer leak rate program results were printed.
  - Containment Sump Data:
    - Initial containment sump level was 47% as indicated on 1-DA-LI-100.
    - Final containment sump level was 62% as indicated on 1-DA-LI-100.
    - Containment Sump leak rate elapsed time – 60 minutes.
    - After this data was recorded, one containment sump pump was placed back in automatic

  Primary to Secondary Leakage exists and is known and has been indicating in the 15 – 25 gpd range per steam generator for the past week. Today the N-16 monitors are slightly elevated and indicate the following:
  SG A: 24.4 gpd
  SG B: 22.1 gpd
  SG C: 25.6 gpd

  The Leakrate spreadsheet is located at folder S:\SURRY PWR STA\3\Ops\Leakrate on the desktop of your laptop computer.

Initiating Cues:

- Here is a partially completed copy of 1-OPT-RC-10.0, Reactor Coolant Leakage – Computer Calculated. I need you to complete 1-OPT-RC-10.0, Reactor Coolant Leakage – Computer Calculated it is entirety and when done turn the procedure in for review.

- When you are ready to have your work reviewed, please inform me, as this will end the JPM.

Operator Directions Handout
(TO BE GIVEN TO APPLICANT)

Initial Conditions

- It is mid-shift on May 22, 2010. Unit 1 power is 100 percent.
- I am the Nuclear Shift Manager. I have assigned you to complete the normal daily 1-OPT-RC-10.0, Reactor Coolant Leakage – Computer Calculated. The procedure is complete up through Step 6.2.11 and the computer generated leak rate data sheet has just been printed out, the leak rate ran for 125 minutes. You are to complete 1-OPT-RC-10.0, Reactor Coolant Leakage – Computer Calculated it is entirety and when done turn the procedure in for review.

- The following are the Unit conditions:
  - Reactor power: 100%
  - Charging flow control is in automatic.
  - One PDTT pump was placed in automatic after the PCS computer leak rate program results were printed.
  - Containment Sump Data:
    - Initial containment sump level was 47% as indicated on 1-DA-LI-100.
    - Final containment sump level was 62% as indicated on 1-DA-LI-100.
    - Containment Sump leak rate elapsed time – 60 minutes.
    - After this data was recorded, one containment sump pump was placed back in automatic

  Primary to Secondary Leakage exists and is known and has been indicating in the 15 – 25 gpd range per steam generator for the past week. Today the N-16 monitors are slightly elevated and indicate the following:
  SG A: 24.4 gpd
  SG B: 22.1 gpd
  SG C: 25.6 gpd

  The Leakrate spreadsheet is located at folder S:\SURRY PWR STA\3\Ops\Leakrate on the desktop of your laptop computer.

Initiating Cues:

- Here is a partially completed copy of 1-OPT-RC-10.0, Reactor Coolant Leakage – Computer Calculated. I need you to complete 1-OPT-RC-10.0, Reactor Coolant Leakage – Computer Calculated it is entirety and when done turn the procedure in for review.

- When you are ready to have your work reviewed, please inform me, as this will end the JPM.

REACTOR COOLANT SYSTEM LEAK RATE

DATE: 5/22/10
START TIME: 125 Minutes ago
DURATION REQUESTED: 125
ESTIMATED STOP TIME: Now

OPERATOR ENTERED PARAMETERS:
YLR0001K, OP ENTERED MINUTES TO RUN = 125 MIN
YLR0002K, OP ENTERED IDENT LEAKAGE = 0 GPM
U9130, ROLLING PRT LEAKRATE = 0.00 GPM

REACTOR COOLANT SYSTEM LEAK RATE

DATE: 5/22/10
START TIME: 125 Minutes ago
DURATION REQUESTED: 125
ESTIMATED STOP TIME: Now

OPERATOR ENTERED PARAMETERS:
YLR0001K, OP ENTERED MINUTES TO RUN = 125 MIN
YLR0002K, OP ENTERED IDENT LEAKAGE = 0 GPM
U9130, ROLLING PRT LEAKRATE = 0.00 GPM

CALCULATION OF LEAK RATES

1) RAW DATA OF PDTT LEVEL – START: 40.70 END: 42.91

2) SAMPLE DATA:

RCS TEMPERATURE AVERAGE ((T0400A + T0420A + T0440A)/3:

573.36	573.38	573.37	573.39	573.32	573.38	573.31	573.28	573.40	573.32	573.43	573.32
573.40	573.34	573.35	573.30	573.32	573.34	573.33	573.30	573.33	573.38	573.32	573.35
573.30	573.32	573.37	573.33	573.32	573.32	573.34	573.36	573.34	573.34	573.32	573.32
573.30	573.34	573.31	573.31	573.30							

PRESSURIZER LEVEL AVERAGE ((L0480A + L0481A + L0482A)/3):

56.67	56.79	56.77	56.82	56.77	56.77	56.76	56.71	56.77	56.76	56.77	56.75
56.72	56.69	56.70	56.70	56.69	56.70	56.70	56.71	56.72	56.77	56.75	56.76
56.74	56.76	56.77	56.72	56.65	56.72	56.73	56.76	56.74	56.76	56.72	56.72
56.73	56.70	56.73	56.70	56.73							

VCT LEVEL (L0112A):

42.90	42.81	42.63	42.60	42.50	42.44	42.35	42.38	42.35	42.32	42.26	42.20
42.14	42.14	42.14	42.05	41.93	41.83	41.74	41.65	41.56	41.44	41.41	41.31
41.19	41.25	41.13	41.07	41.01	40.95	40.95	40.77	40.80	40.67	40.61	40.58
40.52	40.49	40.40	40.40	40.34							

RCS PRESSURE AVERAGE ((P0480A + P0481A + P0482A)/3):

2243.38	2243.62	2243.38	2243.87	2243.30	2243.54	2243.22	2243.13	2243.22	2243.54	2243.79	2243.87
2242.89	2242.81	2243.22	2242.73	2243.05	2243.54	2243.54	2242.73	2243.70	2243.95	2244.11	2243.79
2243.54	2244.44	2243.22	2243.46	2243.30	2242.97	2243.70	2244.44	2244.03	2243.54	2244.03	2243.54
2243.30	2242.65	2243.46	2243.22	2243.70							

3) LINEAR REGRESSION STATISTICS:

PARAMETER	SLOPE	START VALUE	END VALUE
TEMPERATURE	-0.00037	573.36	573.31
PRESSURIZER LEVEL	-0.00026	56.75	56.71
VCT LEVEL	-0.02070	42.86	40.27

4) MASS CHANGE DATA (A NEGATIVE RATE IMPLIES MASS TRANSFER OUT OF THE VOLUME):

RCS:	-0.00037 DEGF/MIN	*	-0.07 LBM/CU FT(DEGF)	*	82.08.8 CU FT		=	0.22 LBM/MIN
PRZR:	-0.00026 PCT/MIN	*	74.0 GAL/PCT	*	0.13368 CU FT/GAL	*	37.12 LBM/CU FT	=	-0.10 LBM/MIN
VCT:	-0.02070 PCT/MIN	*	14.1 GAL/PCT	*	0.13368CU FT/GAL	*	61.87 LBM/CU FT	=	-2.41 LBM/MIN

5) CONVERSIONS FOR PDTT, PRT AND IDENTIFIED LEAKAGE TO LBM:

PDTT CHANGE:	42.91 PCT	-	40.70 PCV				=	2.21 PCT
PDTT:	2.21 PCT	*	71.16 LBM/PCT	/	125 MIN		=	1.26 LBM/MIN
PRT:	0.00 GAL/MIN	*	0.13368 CU FT/GAL	*	61.856 LBM/CU FT		=	0.00 LBM.MIN
IDENTIFIED LEAKAGE:	0.00 GAL/MIN	*	0.13368 CU FT/GAL	*	62.310 LBM/CU FT		=	0.00 LBM.MIN

6) TOTAL LEAKAGES IN LBM/MIN:

RCS:	(-1.0) *	0.22 LBM/MIN	+	-0.10 LBM/MIN	+	-2.41 LBM/MIN	=	2.29 LBM/MIN
IDENTIFIED:		1.26 LBM/MIN	+	0.00 LBM/MIN	+	0.00 LBM/MIN	=	1.26 LBM/MIN
UNIDENTIFIED:		2.29 LBM/MIN	-	1.26 LBM/MIN			=	1.03 LBM/MIN

7) TOTAL LEAKAGES IN GALLONS/MINUTE:

RCS:		2.29 LBM/MIN	*	7.48052 GAL/CU FT	/	61.856 LBM/CU FT	=	0.28 GAL/MIN
IDENTIFIED:		1.26 LBM/MIN	*	7.48052 GAL/CU FT	/	61.856 LBM/CU FT	=	0.15 GAL/MIN
UNIDENTIFIED:		0.28 GAL/MIN	-	0.15 GAL/MIN			=	0.13 GAL/MIN

NOTE: VALUES WITH A QUALITY OF “B” ARE UNRELIABLE

REACTOR COOLANT SYSTEM LEAK RATE

DATE: 5/22/10
START TIME: Now

Dominion	PROCEDURE NO: 1-OPT-RC-10.0
OPERATIONS PERIODIC TEST	REVISION NO: 33
PROCEDURE TYPE: OPERATIONS PERIODIC TEST	UNIT NO: 1
PROCEDURE TITLE: REACTOR COOLANT LEAKAGE - COMPUTER CALCULATED	

LR						

REVISION SUMMARY:

Revised in response to Operations Feedback, OP FB 10-0221 for CR379270. Added P&L 4.10 and revised second note before Step 6.2.10.

UNIT ONE

TABLE OF CONTENTS

Section		Page
1.0	PURPOSE	3
2.0	REFERENCES	3
3.0	INITIAL CONDITIONS	6
4.0	PRECAUTIONS AND LIMITATIONS	6
5.0	SPECIAL TOOLS AND EQUIPMENT	7
6.0	INSTRUCTIONS	8
6.1	General Instructions	8
6.2	Computer Calculation of RCS Leak Rate	10
6.3	Calculation of the Containment Sump Inleakage Rate	14
6.4	Primary to Secondary Leak Rate Verification	16
6.5	Leak Rate Evaluation and Trending	17
7.0	FOLLOW-ON	19
ATTACHMENTS		
1	Summary of Reactor Coolant Leak Rate Test Results and Containment Sump Inleakage	23
2	Determination of Total Other Identified Leakage Excluding PRT and PDTT	24
3	Calculation of PRT Leakage Rate	25

1.0 PURPOSE

1.1 To provide instructions for performing a computer generated daily leak rate test of the Reactor Coolant System by using a mass balance method of Reactor Coolant System Inventory analysis, once every 24 hours, when RCS temperature is greater than 200°F. **(Reference 2.4.1)**

2.0 REFERENCES

2.1 Source Documents

2.1.1 UFSAR Section 4.2, RCS Design and Operation

2.1.2 UFSAR Section 5.3.2, Containment Leakage Monitoring System

2.1.3 UFSAR Section 9.1, Chemical Volume and Control System

2.1.4 UFSAR Section 9.3, Residual Heat Removal System

2.1.5 EWR 91-011, RCS Leakage Calculation Revisions / Surry / 1&2

2.2 Technical Specifications Surry Power Station Units 1 and 2

2.2.1 Technical Specification 3.1.C, RCS Operational Leakage

2.2.2 Technical Specification 4.13, RCS Operational Leakage

2.3 Technical References

2.3.1 1-DRP-003, The Curve Book

2.3.2 1-AP-16.00, Excessive RCS Leakage

2.3.3 1-OPT-RC-10.01, Reactor Coolant Leakage - Manually Calculated

2.3.4 RCS Leakage Program (LR), NABU-FS-00101-VPA, Rev. 1.3, January 2003

2.3.5 Technical Report NE-1381, Rev. 0, Evaluation of Surry Power Station Reactor Coolant System Leak Rate Program

2.3.6 ET NAF-98-0069 REV 1.

2.3.7 Technical Report NE-1270, Rev. 0, Evaluation of Surry Power Station RCS Leak Rate Calculation.

2.3.8 DCP 01-008, Instrument and Controls Upgrade Project, Unit 1

2.3.9 ER-AA-AMP-101, Implementation of Activities Performed by License Renewal Aging Management Coordinators

2.3.10 ODM000122, 1-RC-P-1B #2 Seal Degrading Trend

2.4 Commitment Documents

2.4.1 CTS 50114, Revise RCS leakage calculation procedure to use mass balance method

2.4.5 PI S-2004-1855, PSIRV CAS Recommendations

2.4.6 WCAP-16423-NP, Rev. 0, PWR Owners Group Standard Process and Methods for Calculating RCS Leak Rate

2.4.7 LC000307/LA001424 - LBDCR/TSCR 417, Emergency TS Change for Modified IARC/Revised Reporting Requirements and 20 gpd Primary to Secondary Leakage for Unit 1 B SG

2.4.8 PWROG 07-387 Recommendations for Implementation of Guidelines for PWROG RCS Leak Rate Programs with Respect to NEI-03-08

Init **Verif**

3.0 INITIAL CONDITIONS

NOTE:
- Reactor Coolant System (RCS) temperature and pressure stability for the purposes of this procedure shall be determined by Shift Supervision.
- An RCS water inventory balance must be performed once every 24 hours. Surveillance requirement specified time intervals may be adjusted plus or minus 25% to accomodate normal test schedules.
- If required RCS pressure conditions cannot be met, 1-OPT-RC-10.01, Reactor Coolant Leakage - Manually Calculated, must be performed.

_____ 3.1 Verify that the Reactor Coolant System is being maintained at stable temperature and pressure.

_____ 3.2 Verify that Reactor Coolant System Pressure is greater than 2100 psig and less than 2500 psig.

4.0 PRECAUTIONS AND LIMITATIONS

4.1 The RCS leak rate program on the PCS plant computer will halt if VCT level increases by 2.0%, if PDTT level decreases by 1.0%, or if PRZR level changes (increases or decreases) by 2.0% during the performance of the program.

4.2 Routine daily leak rate determinations should be performed over a minimum time period of two hours, when a computer calculation of the RCS leak rate is performed.

4.5 A leak rate based on an RCS water inventory balance is required once every 24 hours, but is not required to be completed until 12 hours after establishment of steady state operation. (stable pressure, temperature, power level, Pressurizer and makeup tank levels, makeup and letdown, and RCP seal injection and return flow) Refer to Tech Spec 4.13, SR 4.13.A.

4.6 The initials identification block in Subsection 7.3 must be completed before this procedure is closed out.

4.7 If any one data point from the leakrate printout or the final leakrate results are marked with POOR or BAD, or has any reason code, (for example, L, H, or S) the leakrate should be considered unreliable.

4.8 The RCS leak rate calculation should not be performed until 10 minutes have passed following pumping the PDTT.

4.9 The RCS must be maintained at steady state during the performance of the leak rate. Steady state is defined as:

- Power change less than one percent of rated Thermal Power
- RCS temperature change less than 2°F
- RCS pressure change less than 5 psig
- No change in letdown or makeup systems
- PRZR level change less than 2%
- No RCP standpipe fills

Init Verif

6.0 INSTRUCTIONS

6.1 General Instructions

NOTE:
- Summary of all RCS Leakage results will be recorded on Attachment 1.
- If RCS pressure and temperature are too unstable for an accurate computer calculation of RCS Leak Rate, a leak rate must be performed within 12 hours after establishment of steady state operation.
- Subsections 6.2, 6.3, and 6.4 may be performed simultaneously.

SI _____ 6.1.1 Notify Chemistry Department that calculation of RCS leak rate will be in progress and that all sampling operations will be stopped unless authorized by Shift Supervision.

SI _____ 6.1.2 Check VCT controller 1-CH-LCV-1115A, VCT LEVEL DIVERT, and verify that no RCS letdown flow is being diverted to the PDT.

SI _____ 6.1.3 Stop all makeup to the VCT.

SI _____ 6.1.4 Record the Total Other Identified Leakage Excluding PRT and PDTT from the last (most recent previously calculated leak rate data) performance of 1-OPT-RC-10.0, Reactor Coolant Leakage - Computer Calculated, or 1-OPT-RC-10.01, Reactor Coolant Leakage - Manually Calculated, or from Computer Point YLR0002K, on Attachment 1.

6.1.5 Calculate the current Total Other Identified Leakage (excluding the PRT and the PDTT).

SI _ a. Identify and list current Other Identified Leakage (excluding PRT and PDTT) on Attachment 2.

SI _____ b. Add the other identified leakage (excluding PRT and PDTT) and record the current Total Other Identified Leakage in Attachment 2 and Attachment 1.

SI _ 6.1.6 Compare values of Total Other Identified Leakage (excluding PRT and PDTT) for last and present performance of 1-OPT-RC-10.0 or 1-OPT-RC-10.01.

N/A SI 6.1.7 IF the amount of Total Other Identified Leakage (excluding PRT and PDTT) recorded in Attachment 1 has changed from the value recorded from last (most recent previously calculated leak rate data) performance of 1-OPT-RC-10.0 or 1-OPT-RC-10.01, THEN notify the Operations Manager on Call before continuing this procedure. Otherwise, enter N/A.

6.2 Computer Calculation of RCS Leak Rate

NOTE: The RCS leak rate calculation should not be performed until 10 minutes have passed following pumping the PDTT.

_____ 6.2.1 Verify that the PDTT level is between 40% and 46%. (Reference 2.3.10)

_____ 6.2.2 Verify that RCS Pressure is greater than 2100 psig and less than 2500 psig.

_____ 6.2.3 Verify that Pressurizer level is between 20% and 75%.

_____ 6.2.4 IF necessary to stabilize charging flow, THEN place 1-CH-FCV-1122, CHG FLOW CNTRL, in Manual, and control PRZR level at programmed setpoint. Otherwise, enter N/A.

6.2.5 Determine the Pressurizer Relief Tank (PRT) Inleakage by performing the following. **(Reference 2.4.3)**

_____ a. IF a previously calculated value of PRT inleakage is to be used for the PCS calculation, THEN enter N/A for Substep 6.2.5.b below. IF the previously calculated value of PRT inleakage is NOT being used, THEN enter N/A for this substep.

b. Perform the following Substeps for the manual calculation of the PRT leakrate.

_____ 1. Verify no makeups to the PRT, draining of the PRT, or pressurizer PORV openings will be performed during the trending of the PRT Level (L0485A) on the PCS plant computer or by reviewing the

N/A SI

4. Record the final time and PRT Level at the end of the addressable point L0485A trend in Attachment 3, Table 1: Calculation of PRT Level Change.

5. Calculate Elapsed Time in Attachment 3, Table 1: Calculation of PRT Level Change.

6. Using 1-DRP-003, convert PRT levels(%) to lbm and record in Attachment 3, Table 1: Calculation of PRT Level Change. (Using closest table entry to indicated level is acceptable.) Calculate the change in PRT level (lbm) and record in Attachment 3, Table 1: Calculation of PRT Level Change.

7. IF the PRT inleakage is less than zero, THEN record zero for the PRT Level Change.

8. Determine the PRT inleakage in lbm/min by performing Attachment 3, Table 2, PRT Leak Rate Calculation (lbm/minute) for the PRT.

9. Convert the PRT inleakage in lbm/min to gpm by performing Attachment 3, Table 3, Conversion to gpm.

G2.2

SI

6.2.6 Open the Leak Rate Program on the PCS plant computer.

NOTE: Routine daily leak rate determinations should be performed over a minimum time period of two hours. Backup leak rate should be performed over a minimum time period of 30 minutes.

SI 6.2.9 Verify entered or enter the calculated PRT leakrate (U9130).

PRT leakrate entered 0 gpm

NOTE: The PCS plant computer will automatically display the leak rate program results at the end of the selected time period noted in Step 6.2.7.

Any evolution that changes level in the PDTT (for example, draining the PRT, making up to the RCP Vapor Seal Tank, or cycling of the Gas Stripper) may negate the validity of this OPT.

SI 6.2.10 Depress the START button on the Leak Rate Display to activate the leak rate program on the PCS computer.

N/A SI 6.2.11 IF at any time the PCS RCS Leak Rate program needs to be halted by the operator, THEN click the STOP button. Otherwise enter N/A.

_____ 6.2.12 Evaluate unidentified RCS leak rate result and perform the actions indicated in the table below. Enter N/A for the condition that does not exist, or if the unidentified RCS leak rate is positive.

Evaluation of RCS Leakrate

Unidentified RCS Leakrate:	Actions to be taken:	Initials
With a negative Unidentified leakrate greater than -0.08 gpm	a. REPEAT Steps 6.2.7 through 6.2.12 to obtain valid unidentified RCS Leak Rate Calculation. b. IF a valid Unidentified RCS Leak Rate calculation can not be obtained, THEN perform a manual Leak Rate IAW 1-OPT-RC-10.01. (Reference 2.3.6)	_____ _____
With a negative Unidentified		

_____ 6.2.14 Print and attach the PCS computer printout leak rate program results to this procedure as a permanent record of the derivation of the RCS Leak rates recorded in Step 6.2.13.

_____ 6.2.15 Verify one PDTT pump is in AUTO.

6.2.16 IF charging flow control was placed in Manual in Step 6.2.4, THEN do the following. Otherwise, enter N/A.

_____ a. Verify or adjust CHG flow to maintain PRZR level at programmed setpoint.

_____ b. Place 1-CH-FCV-1122, CHG FLOW CNTRL, in Auto.

6.3 Calculation of the Containment Sump Inleakage Rate

NOTE:
- The Containment Sump Inleakage Rate is not required by the Surry Technical Specifications and is being determined for information only.
- The same Containment sump level instrument should be used to determine both the initial and final Containment sump indicated levels.
- CTMT Sump inleakage rate will be calculated using Attachment 4.
- This Subsection is not required if performing a backup leak rate.

_____ 6.3.1 IF it is desired to pump down the Containment Sump, THEN place one of the following sump pumps in HAND and verify pump starts. Otherwise, enter N/A.

____ 1-DA-P-4A, CTMT Sump Pump 4A

____ 1-DA-P-4B, CTMT Sump Pump 4B

_____ 6.3.2 IF desired, THEN place control switches for 1-DA-P-4A and 1-DA-P-4B, CTMT SUMP PUMPs, in OFF. Otherwise, enter N/A.

_____ 6.3.3 Record the required initial data for calculating the Containment sump inleakage rate. (Attachment 4, Table 1 - Containment Sump Inleakage Rate, Column 3)

_____ 6.3.4 Record the required final data for calculating the Containment sump inleakage rate. (Attachment 4, Table 1 - Containment Sump Inleakage Rate, Column 2)

_____ 6.3.5 Calculate the change in parameter from the initial start conditions to the final

_____ 6.3.8 Verify or place one CTMT sump pump in AUTO.

6.4 Primary to Secondary Leak Rate Verification

NOTE: This Subsection is not required if performing a backup leak rate.

_____ 6.4.1 Verify primary to secondary leakage through SG A and SG C is less than or equal to 100 gallons per day AND less than or equal to 20 gallons per day through SG B IAW either of the following. (✓) Enter N/A for this Subsection if RCS temperature is less than 200°F. **(Ref. 2.4.7)**

____ If Reactor power is greater than 25%, all N-16 Radiation Monitors are operable

____ If Reactor power is less than or equal to 25%, OR any N-16 Radiation Monitor is inoperable, Chemistry has verified leakage IAW 0-CPT-SG-003, Steam Generator Primary to Secondary Leakage, if stable RCS conditions exist.

NOTE: Primary to secondary leakage determination through each SG is required every 72 hours. If an SG N-16 Radiation Monitor is inoperable, sampling will be used to determine this leak rate.

_____ 6.4.2 Record primary to secondary leakage from each SG below. Enter N/A for SG(s) if N-16 monitor inoperable.

- SG A _____ gpd
- SG B _____ gpd
- SG C _____ gpd

6.5 Leak Rate Evaluation and Trending

NOTE:
- The Leakrate spreadsheet is located at S:\SURRY PWR STA\3\Data1\Ops\Leakrate\1-OPT-RC-10.0.xls. Backup leakrates are to be entered in "Backup Statistics" tab of spreadsheet, if applicable.
- This Subsection is not required if performing a backup leak rate.

_____ 6.5.1 Update 1-OPT-RC-10.0 Data Entry tab in 1-OPT-RC-10.0 spreadsheet with DAILY primary leak rate, primary to secondary leak rate, and sump in-leakage information.

NOTE: The 'Daily Leakage Graphs" provides trends for all parameters.

_____ 6.5.2 Review leakage trends in 1-OPT-RC-10.0 spreadsheet.

NOTE:
- The following information is determined by 1-OPT-RC-10.0 spreadsheet in "Daily Statistics" tab with Yellow representing Action Level 1, Orange representing Action Level 2, and Red representing Action Level 3. If all Action Level cells are Green, then all criteria is satisfactory.
- The OPT-RC-10.0 spreadsheet Action Level criteria is not subject to change and does not need to have the revision number verified. Changes will be made to the baseline mean unidentified leak rate and baseline standard deviation of unidentified leak rate by Engineering following Refueling outages and as required.

_____ 6.5.3 IF any of the following criteria apply to the unidentified leakage, THEN initiate 1-OP-RC-014. Otherwise, enter N/A.

Action Level 1

____ One seven day rolling average of Unidentified RCS Leak Rate greater than 0.1 gpm

____ Nine consecutive daily Unidentified RCS Leakrates greater than baseline mean

Action Level 2

____ Two consecutive daily Unidentified RCS Leakrates greater than 0.15 gpm.

G2.2

____ Two of Three consecutive daily Unidentified RCS Leakrates greater than mean + 2 standard deviations

Action Level 3

7.0 FOLLOW-ON

7.1 Acceptance Criteria

_____ 7.1.1 Evaluate the test results by reviewing the following Acceptance Criteria. (✓)

_____ The Unidentified Leakage Rate is less than or equal to 1.0 gpm.

_____ The Total Identified Leakage Rate is less than or equal to 10.0 gpm.

_____ Primary to secondary leakage through each Steam Generator is being monitored IAW 0-CPT-SG-003, OR is less than or equal to 100 gallons per day through SG A and SG C AND less than or equal to 20 gallons per day through SG B as determined by N-16 Radiation Monitors **(Ref. 2.4.7)**

_____ 7.1.2 Document the test results. (✓)

___ Satisfactory ___ Unsatisfactory

7.2 Follow-On Tasks

7.2.1 IF the test was unsatisfactory, THEN perform the following actions. Otherwise, enter N/A.

_____ a. Document the reason for the unsatisfactory test in Operator Comments.

_____ b. Notify System Engineering of unsatisfactory conditions and record the name of the person notified.

_____ d. Initiate a Condition Report and record the number below.

CR No. _____

_____ e. Initiate the use of 1-AP-16.00, Excessive RCS Leakage.

_____ 7.2.2 IF a partial operability test was performed, THEN document the reason for the partial test in Operator Comments. Otherwise, enter N/A.

7.3 **Notification, Documentation, and Procedure Closeout**

_____ 7.3.1 Notify Shift Supervision that the test is complete.

_____ 7.3.2 Document Leak Rate results in Unit 1 Narrative Logs.

The Initials in this procedure will be identified by the Printed Name.

Initials	Printed Name

Operator Comments: _____

G2.2

7.4 Review

Comments: _____

_____

_____

_____

_____

_____

_____

_____

_____

_____

_____

Reviewed by: _____ Date: _____
Shift Supervision

Forward original procedure to Station Records.

(Page 1 of 1)

Attachment 1

SUMMARY OF REACTOR COOLANT LEAK RATE TEST RESULTS AND CONTAINMENT SUMP INLEAKAGE

Summary of Reactor Coolant Leak Rate Test Results			
RCS Leak Rate Data	Identified leakage from the LAST (most recent previously calculated leak rate data) performance of 1-OPT-RC-10.0 or 1-OPT-RC-10.1, as appropriate	**Current** values:	
Total OTHER Identified Leakage:	(gpm)	(gpm)	
Total Unidentified RCS Leak Rate:		(gpm)	
Identified RCS Leak Rate:		(gpm)	
Total RCS Leak Rate:		(gpm)	

CTMT Sump Inleakage
CTMT Sump Inleakage Rate: _____ (gpm)

(Page 1 of 1)

Attachment 2
DETERMINATION OF TOTAL OTHER IDENTIFIED LEAKAGE EXCLUDING PRT AND PDTT

NOTE: The date column corresponds to the date on which the leak was discovered.

NOTE: Leakage from Safety Injection Accumulators to the PDTT may result in a lower than actual unidentified leak rate.

Total Other Identified Leakage (excluding PRT and PDTT)		
Source	Leak Rate (gpm)	Date

Add all the leak rates recorded above in the leak rate column and record the total below as the RCS Total Other Identified Leak Rate.

RCS Total Other Identified Leak Rate =_____GPM

(Page 1 of 1)

Attachment 3
CALCULATION OF PRT LEAKAGE RATE

Table 1: Calculation of PRT Level Change			
Parameter	Final Value of Parameter at End Time	Initial Value of Parameter at Start Time	Change in Parameter (+ or -) (Final Value - Initial Value)
Elapsed Time	End Time:	Start Time:	Minutes:
PRT Level % (L0485A)			
PRT Level (lbm) use 1-DRP-003			(± lbm)

Table 2, PRT Leak Rate Calculation (lbm/minute)		
PRT Level Change (lbm)	Divide by Change in Time (minutes)	Equals Leak rate (lbm / minute)

G2.2

Table 3, Conversion to gpm		
Parameter	Conversion Factors *	Leak Rate (gpm)
PRT Leak Rate (lb_m / minute)	Multiply leak rate by: 7.48052 gallons / ft^3 Divided by 61.856 lb_m / ft^3 (VCT Conditions)	

* VCT conditions for Makeup Water to RCS: Density = 61.856 lb_m/ft^3 @ 110°F and 15 psia.

(Page 1 of 1)

Attachment 4
CALCULATION OF THE CONTAINMENT SUMP INLEAKAGE RATE

Table 1 - Containment Sump Inleakage Rate			
Parameter being analyzed	Column 2 Final Value of Parameter at End of Time	Column 3 Initial Value of Parameter at Start of Time	**Change in Parameter (+ or -) (final value - initial value)
Elapsed Time			(MINUTES)
CTMT Sump Level instrument used: 1-DA-LI-100, 1-DA-LI-110A or 1-DA-LI-110B	Circle instrument used 1-DA-LI-100, 1-DA-LI-110A or 1-DA-LI-110B	Circle instrument used: 1-DA-LI-100, 1-DA-LI-110A or 1-DA-LI-110B	N / A
CTMT Sump Level	(% or IN)	(% or IN)	N / A
CTMT Sump Volume from curve in 1-DRP-003	(gallons)	(gallons)	(gallons)

**A ± value in the change in parameter column indicates an increase or decrease in the respective parameter.

Table 2 - Containment Sump Inleakage Rate		
Change in Parameter (±) (final value - initial value)	Divide by Elapsed Time	Sump Inleakage Rate
CTMT Sump Volume Change _____ (gallons)	(Minutes)	(gpm)

(Page 1 of 1)

Attachment 5
COMPUTER POINTS ASSOCIATED WITH LEAK RATE

PCS Computer Pt ID	Description
K2051	Atmospheric Pressure
L0112A	Volume Control Tank Level
L0480A	Pressurizer Level CH1 (L459)
L0481A	Pressurizer Level CH2 (L460)
L0482A	Pressurizer Level CH3 (L461)
P0480A	PZR Pressure CH1 (P455)
P0481A	PZR Pressure CH2 (P456)
P0482A	PZR Pressure CH3 (P457)
T0400A	RC Loop A TAVE CH1 (T412)
T0420A	RC Loop B TAVE CH2 (T422)
T0440A	RC Loop C TAVE CH3 (T432)
Y4020A	Primary Drains Tank Level
U9130	Rolling PRT Leak Rate (gpm)
U9133	Unidentified Leak Rate (gpm)
U9134	Identified Leak Rate (gpm)
U9135	RCS Total Leak Rate (gpm)
U9136	Unidentified Leak Rate (lbm/min)
U9137	Identified Leak Rate (lbm/min)
U9138	RCS Total Leak Rate (lbm/min)

U.S. Nuclear Regulatory Commission
Surry Power Station

SR10301
Administrative Job Performance Measure GEN2.2.37 (3.6/4.6)

Applicant_____ Start Time_____

Examiner_____

Date _____ Stop Time_____

Title

Periodic Test Review 1-OPT-CH-002 (REV 47), CHARGING PUMP OPERABILITY AND PERFORMANCE TEST FOR 1-CH-P-1B

K/A: GEN2.2.37 Ability to determine operability and/or availability of safety related equipment.

Applicability	**Estimated Time**	**Actual Time**
SRO(I)	45 Minutes	

Conditions

- Task is to be PERFORMED in the classroom.

Standards

- Reviews completed 1-OPT-CH-002 (REV 47), CHARGING PUMP OPERABILITY AND PERFORMANCE TEST FOR 1-CH-P-1B, for accuracy and determines operability.

Initiating Cues

- I am the Shift Manager and you are the Unit Supervisor. Here is a copy of 1-OPT-CH-002 (REV 47), CHARGING PUMP OPERABILITY AND PERFORMANCE TEST FOR 1-CH-P-1B, which has just been completed.
- No maintenance has been performed on the Charging system.
- Review 1-OPT-CH-002 (REV 47), CHARGING PUMP OPERABILITY AND PERFORMANCE TEST FOR 1-CH-P-1B, for completeness and accuracy.
- List ALL discrepancies noted on the ANSWER SHEET provided.
- When you are finished, inform your examiner of ALL problems noted in the procedure and any Technical Specification operability concerns if applicable.

Terminating Cues

- Applicant has completed the procedure review and discussed problems with examiner.

Tools and Equipment

- Calculator
- Copy of completed 1-OPT-CH-002 (REV 47), CHARGING PUMP OPERABILITY AND PERFORMANCE TEST FOR 1-CH-P-1B.

Safety Considerations

- None

Notes

PERFORMANCE CHECKLIST

Notes to the Evaluator

- Task critical elements are bolded and noted at the end of the step as CRITICAL STEP.
- **START TIME:**

STEP 1: ***STEP 1 -*** Review the purpose of the procedure (Section 1.0) **STANDARD:** • Reviews purpose of procedure steps 1.1 - 1.9. **EVALUATOR'S NOTE: N/A** **COMMENTS:**	_____ **SAT** _____ **UNSAT**
STEP 2: ***STEP 2*** - Review the References section (Section 2.0) **STANDARD:** • Reviews section 2.1, Source Documents, 2.2 Technical Specifications, 2.3 Technical References, and 2.4 Commitment Documents. **EVALUATOR'S NOTE: N/A**	_____ **SAT** _____ **UNSAT**

COMMENTS:	

STEP 3: ***STEP 3*** - Reviews the Initial Conditions section (Section 3.0) **STANDARD:** • Reviews Initial Conditions steps 3.1 - 3.4. **EVALUATOR'S NOTE: N/A** **COMMENTS:**	_____ **SAT** _____ **UNSAT**
STEP 4: ***STEP 4*** - Reviews the Precautions and Limitations section (Section 4.0) **STANDARD:** • Reviews precautions and limitations steps 4.1 - 4.15. **EVALUATOR'S NOTE: N/A** **COMMENTS:**	_____ **SAT** _____ **UNSAT**

STEP 5: ***STEP 5*** - Reviews the Special Tools and Equipment section (Section 5.0) **STANDARD:** • Reviews Special Tools and Equipment section steps 5.1 - 5.8. **EVALUATOR'S NOTE: N/A** **COMMENTS:**	_____ **SAT** _____ **UNSAT**
STEP 6: ***STEP 6.1*** - Reviews Work Preparation section (Section 6.1). **STANDARD:** • Verifies proper placekeeping on all steps, notes, and cautions. • Verifies step 6.1.1 is N/A'd. • Verifies step 6.1.2 substeps a and b are initialed and Attachment 9 is properly filled out. • Verifies step 6.1.3 is initialed and SQC numbers and Cal Due Dates are recorded on Attachment 1. • Verifies step 6.1.4 is initialed. • Verifies step 6.1.5 is initialed and blocks are correctly checked off. The 6th block should be checked off which is "1-CH-P-1B needs the Quarterly Test (1-CH-P-1B must be stopped), Perform Subsection 6.5 and Subsection 6.6" • Goes to subsection 6.5.	_____ **SAT** _____ **UNSAT**

EVALUATOR'S NOTE: N/A **COMMENTS:**	
STEP 7: ***STEPS 6.2-6.4*** - Reviews Steps 6.2 - 6.4 of 1-OPT-CH-002 **STANDARD:** • Verifies all steps in 6.2 - 6.4 are N/A'd. **EVALUATOR'S NOTE: N/A** **COMMENTS:**	_____ **SAT** _____ **UNSAT**
STEP 8: ***STEP 6.5***- Reviews Discharge Check Valve Close Test, MOV Timing, Lube Oil TCV Timing and Starting 1-CH-P-1B section of procedure (Section 6.5.1 - 6.5.20). **STANDARD:**	_____ **SAT** _____ **UNSAT**

• Verifies proper placekeeping on all steps, notes, and cautions. • Verifies step 6.5.1 – 6.5.20 are properly initialed. • Verifies open and close stroke times are recorded on Attachment 4 for 1-CH-MOV-1286B, 1287B and 1275B. • Verifies discharge pressure recorded on Attachment 1 IAW step 6.5.1.e, 6.5.1.f, 6.5.1.g and that differential is < 7.5 psid IAW 6.5.1.g. • Verifies box checked in step 6.5.2 indicating that 1-SW-TCV-108B was closed and goes to step 6.5.3. • Verifies step 6.5.4 is N/A'd. • Verifies step 6.5.6.a is N/A'd. • Verifies step 6.5.7 is N/A'd. • Verifies the open and closed stroke times, test position, and the as left position for 1-SW-TCV-108B are recorded on Attachment 4. • Verifies lube oil temperature recorded in step 6.5.6.d is between 60-120 °F. • Verifies step 6.5.10.b is N/A'd. • Verifies step 6.5.12 is N/A'd. • Verifies lube oil pressure recorded in step 6.5.16 is between 8-35 psig. • Verifies step 6.5.17 N/A'd. • Verifies pump and damper checks were sat IAW step 6.5.20 on non-running charging pumps. **EVALUATOR'S NOTE: N/A** **COMMENTS:**	

STEP 9: ***STEP 6.6***- Reviews 1-CH-P-1B Performance Test section of procedure (Section 6.6.1 - 6.6.26). **STANDARD:** • Verifies proper placekeeping on all steps, notes, and cautions. • Verifies step 6.6.1 – 6.6.26 are properly initialed. • Verifies step 6.6.3 is N/A'd. • Verifies data is recorded in step 6.6.5 - 6.6.7. • Verifies step 6.6.10.b is N/A'd. • Verifies data recorded on Attachments 1 and 2 IAW steps 6.6.12 - 6.6.16. • Verifies step 6.6.17 and step 6.6.18 are N/A'd. • Verifies data is recorded in step 6.6.22. • Verifies step 6.6.26 N/A'd. • **EVALUATOR'S NOTE: N/A** **COMMENTS:**	_____ **SAT** _____ **UNSAT**
STEP 10: ***STEPS 6.7-6.8*** - Reviews Steps 6.7 - 6.8 of 1-OPT-CH-002 **STANDARD:**	_____ **SAT** _____ **UNSAT**

• Verifies all steps in 6.7 - 6.8 are N/A'd. **EVALUATOR'S NOTE: N/A** **COMMENTS:**	
STEP 11: ***STEP 6.9-*** Reviews Obtaining Oil Samples section of procedure Section 6.9.1-6.9.2). **STANDARD:** • Verifies proper placekeeping on all steps, notes, and cautions. • Verifies steps in 6.9.1 are properly initialed and steps in 6.9.2 are N/A'd. **EVALUATOR'S NOTE: N/A** **COMMENTS:**	_____ **SAT** _____ **UNSAT**
STEP 12: ***STEP 6.10*** - Reviews Step 6.10 of 1-OPT-CH-002. **STANDARD:**	_____ **SAT** _____ **UNSAT**

• Verifies all steps of 6.10 are N/A'd. **EVALUATOR'S NOTE: N/A** **COMMENTS:**	
STEP 12: ***STEP 7.0***- Reviews Follow-On section of procedure (Section 7.1 – 7.4). **STANDARD:** • Verifies proper placekeeping on all steps, notes, and cautions. • Evaluates the acceptance criteria in step 7.1.1 by reviewing attachment data referenced for each bulleted item. **EVALUATOR'S NOTE: N/A** **COMMENTS:**	_____ **SAT** _____ **UNSAT**
STEP 13: ***Attachment 1***- Reviews Attachment 1 Data. **STANDARD:** • Review attachment 1 data and verifies all are within the acceptance criteria.	_____ **SAT** _____ **UNSAT**

EVALUATOR'S NOTE: N/A **COMMENTS:**	
STEP 14: ***Attachment 2***- Reviews Attachment 2 Data. **STANDARD:** • Review attachment 2 data and verifies all are within the acceptance criteria. • **Notes that the outboard horizontal vibration (pt 22) on the pump bearing is in the INOPERABLE RANGE and that OPT was checked as SAT.** • **This is a critical step.** **EVALUATOR'S NOTE: N/A** **COMMENTS:**	_____ **SAT** _____ **UNSAT**
STEP 15: ***Attachment 4***- Reviews Attachment 4 Data. **STANDARD:** • Review attachment 4 data and verifies all are within the acceptance criteria. • **Notes that 1-CH-MOV-1287B OPEN stroke test time is not in the ACCEPTABLE range and that OPT was checked as SAT.** • **This is a critical step.**	_____ **SAT** _____ **UNSAT**

EVALUATOR'S NOTE: N/A **COMMENTS:**	
STEP 16: ***Attachment 9***- Reviews Attachment 9. **STANDARD:** • Verifies proper placekeeping on all steps, notes, and cautions. • Verifies all steps in attachment 9 are properly initialed or N/A'd as applicable. **EVALUATOR'S NOTE: N/A** **COMMENTS:**	_____ **SAT** _____ **UNSAT**

STOP TIME:

_____

_____

_____

_____

_____

ANSWER KEY
1-OPT-CH-002 REVIEW

1. **Attachment 2, outboard horizontal vibration (pt 22) on the pump exceeds the inoperable range limit given. (CRITICAL TASK)**

2. **Attachment 4, 1-CH-MOV-1287B exceeds open stroke time limits. (CRITICAL TASK)**

3. Step 7.1.1, Charging pump delta-p and vibration status determinations are checked as NOT being inoperable. 1-CH-MOV-1287B is checked as meeting the acceptance criteria.

4. **7.1.2, PT is marked as SAT versus UNSAT. (CRITICAL TASK)**

5. Step 7.2.1, step marked N/A when notifications to engineering should be made and Condition Reports/Work Requests should be submitted.

6. No comments made in the Operator Comments section.

7. **They are in violation of Tech Spec 3.2 because they do not have two boron injection subsystems due to 1-CH-P-1B being inoperable. They are in a 72 hour clock to be in at least HOT SHUTDOWN within the next 6 hours. (CRITICAL TASK)**

8. **They are in violation of Tech Spec 3.3 because they do not have two operable Safety Injection subsystems due to 1-CH-P-1B being inoperable. They are in a 72 hour clock to be in at least HOT SHUTDOWN within the next 6 hours. (CRITICAL TASK)**

Operator Directions Handout
(TO BE READ TO APPLICANT BY EXAMINER)

Task

- Task is to be performed in the classroom.
- Review 1-OPT-CH-002 (REV 47), CHARGING PUMP OPERABILITY AND PERFORMANCE TEST FOR 1-CH-P-1B, for completeness and accuracy.

Directions

The evaluator will explain the initial conditions of the task to be performed and will provide the initiating cue. Ensure you indicate to the evaluator when you understand your assigned task.

Initial Conditions:

- Unit 1 is at 100% power.
- 1-OPT-CH-002 (REV 47), CHARGING PUMP OPERABILITY AND PERFORMANCE TEST FOR 1-CH-P-1B, has just been completed.

Initiating Cues

- I am the Shift Manager and you are the Unit Supervisor. Here is a copy of 1-OPT-CH-002 (REV 47), CHARGING PUMP OPERABILITY AND PERFORMANCE TEST FOR 1-CH-P-1B, which has just been completed.
- No maintenance has been performed on the Charging system.
- Review 1-OPT-CH-002 (REV 47), CHARGING PUMP OPERABILITY AND PERFORMANCE TEST FOR 1-CH-P-1B, for completeness and accuracy.
- List ALL discrepancies noted on the ANSWER SHEET provided.
- When you are finished, inform your examiner of ALL problems noted in the procedure and any Technical Specification operability concerns if applicable.

Operator Directions Handout
(TO BE GIVEN TO APPLICANT)

Initial Conditions:

- Unit 1 is at 100% power.
- 1-OPT-CH-002 (REV 47), CHARGING PUMP OPERABILITY AND PERFORMANCE TEST FOR 1-CH-P-1B, has just been completed..

Initiating Cues

- I am the Shift Manager and you are the Unit Supervisor. Here is a copy of 1-OPT-CH-002 (REV 47), CHARGING PUMP OPERABILITY AND PERFORMANCE TEST FOR 1-CH-P-1B, which has just been completed.
- No maintenance has been performed on the Charging system.
- Review 1-OPT-CH-002 (REV 47), CHARGING PUMP OPERABILITY AND PERFORMANCE TEST FOR 1-CH-P-1B, for completeness and accuracy.
- List ALL discrepancies noted on the ANSWER SHEET provided.
- When you are finished, inform your examiner of ALL problems noted in the procedure and any Technical Specification operability concerns if applicable.

ANSWER SHEET
1-OPT-CH-002 REVIEW

U.S. Nuclear Regulatory Commission
Surry Power Station

SR10301
Administrative Job Performance Measure 2.2.13

Applicant_____ Start Time_____

Examiner_____

Date _____ Stop Time_____

Title

Determine Tagout Boundaries

K/A: G2.2.13 – Knowledge of Tagging and Clearance Procedures. (4.1/4.3)

Applicability	**Est Completion Time**	**Actual Time**
RO	30 Minutes	_____

Conditions

- Task is to be PERFORMED in the CLASSROOM.

Standards

- Correctly determine the tagging boundary to allow for maintenance on 1-BC-P-1A.

Initiating Cues

- It has been reported that the outboard pump seal has failed on 1-BC-P-1A and is leaking excessively. The shift secured 1-BC-P-1A and placed 1-BC-P-1B in service.
- I am the Nuclear Shift Manager. I need you to determine the electrical and mechanical tagging boundaries that will allow maintenance to safely fix the pump seal on 1-BC-P-1A.

Initial Conditions

- It has been reported that the outboard pump seal has failed on 1-BC-P-1A and is leaking excessively. The shift secured 1-BC-P-1A and placed 1-BC-P-1B in service.
- You are to determine the electrical and mechanical tagging boundaries that will allow maintenance to safely replace the pump seal on 1-BC-P-1A after the tags have been hung and associated piping drained.
- Use the attached table to identify all components and their required positions. The number of blanks on this table does not indicate the number of steps in the tagout or the number of components to be tagged.
- The order in which tags should be placed is not necessary.
- When you finish identifying the tagging boundary, inform an examiner.
- The computerized Tagging Systems are not operational and may not be used for this task.

Terminating Cues

- Applicant informs examiner that the task has been completed.

Tools, Equipment, and Procedures

- Applicants may request administrative procedures and plant drawings.

Procedures

- OP-AA-200, EQUIPMENT CLEARANCE
- 11448-FM-73A SH 1
- 11448-FE-1B

Tools and Equipment

- Computer only connected to Webtop

Safety Considerations

- None

Notes

Performance Checklist

Notes to the Evaluator.

- Task critical elements are bolded and noted by the words “Critical Step” at the end of the step.
- **START TIME:**

STEP 1: Reviews the initial conditions of the JPM and uses Webtop to identify the drawings associated with the Bearing Cooling System that will be used to generate a safe working boundary. **STANDARD:** (a) Utilizes Webtop and identifies that the following drawings are applicable: 11448-FM-73A SH 1 and 11448-FE-1B. **EVALUATOR’S NOTE:** • **If asked**, provide candidate with system to drawing number summary sheet. **COMMENTS:**	_____ **SAT** _____ **UNSAT**

STEP 2: Reviews mechanical drawing 11448-FM-73A SH1 and identifies the mechanical boundaries (suction, discharge, vent, and drain) **STANDARD:** **(a) Notes that 1-BC-70 (pump discharge valve) will need to be closed.** **(b) Notes that 1-BC-66 (pump suction valve) will need to be closed.** **(c) Notes that 1-BC-267 (pump discharge drain) will need to be opened.** **(d) Notes that 1-BC-171 (pump seal vent) will need to be opened.** **(e) 1-BC-68 (1-BC-PI-101A isolation), 1-BC-441 (1-BC-PI-115A isolation), and 1-BC-445 (1-BC-PI-116A isolation) are acceptable alternates to 1-BC-171.** **This is a critical step.** **EVALUATOR NOTES:** o Component and component position are both critical. **COMMENTS:**	_____ **SAT** _____ **UNSAT**
STEP 3: Reviews electrical drawing 11448-FE-1B and identifies the electrical boundary (4160V supply breaker) **STANDARD:** **(a) Notes that 1-EP-BKR-15B8 will need to be opened** **This is a critical step.** **EVALUATOR NOTES:** • Candidate may also tag the control switch in pull to lock. o Component and component position are both critical.	_____ **SAT** _____ **UNSAT**

COMMENTS:	

STEP 4:

Completes the attached table and reports that the task is complete.

_____ **SAT**

_____ **UNSAT**

STANDARD:
Table is completed as follows:

	Component ID Number / Name	Position	Danger Tag Required
1	1-BC-P-1A Control Switch	PTL	No
2	**1-EP-BKR-15B8 ('A' BC Pump Supply Breaker)**	**Disconnect**	Yes
3	**1-BC-70 ('A' BC Pump Discharge Valve)**	**Closed**	Yes
4	**1-BC-66 ('A' BC Pump Suction Valve)**	**Closed**	Yes
5	**1-BC-267 ('A' BC Pump Drain)**	**Open**	No
6	**1-BC-171 ('A' BC Pump Seal Vent)**	**Open**	No
7			
8			
9			
10			
11			
12			

EVALUATOR'S NOTE:

- **1-BC-68 (1-BC-PI-101A isolation), 1-BC-441 (1-BC-PI-115A isolation), and 1-BC-445 (1-BC-PI-116A isolation) are acceptable alternates to 1-BC-171.**
- **1-BC-270 may also be used as an additional drain, the PI must be removed.**

COMMENTS:

STOP TIME:

_____

_____

_____

_____

_____

_____

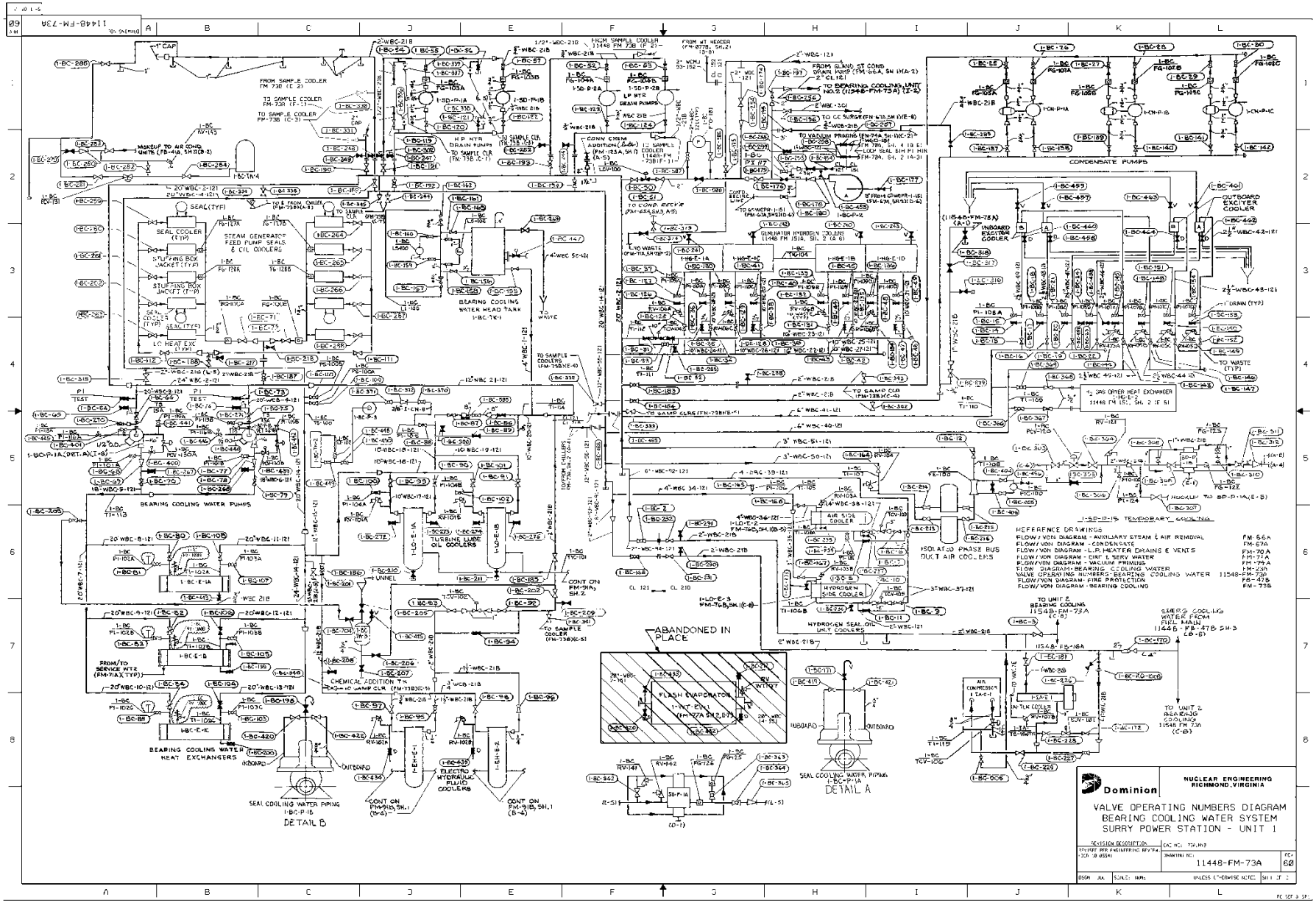

PRIOR TO USING FOR DESIGN WORK CHECK DWG FOR WORK PENDING

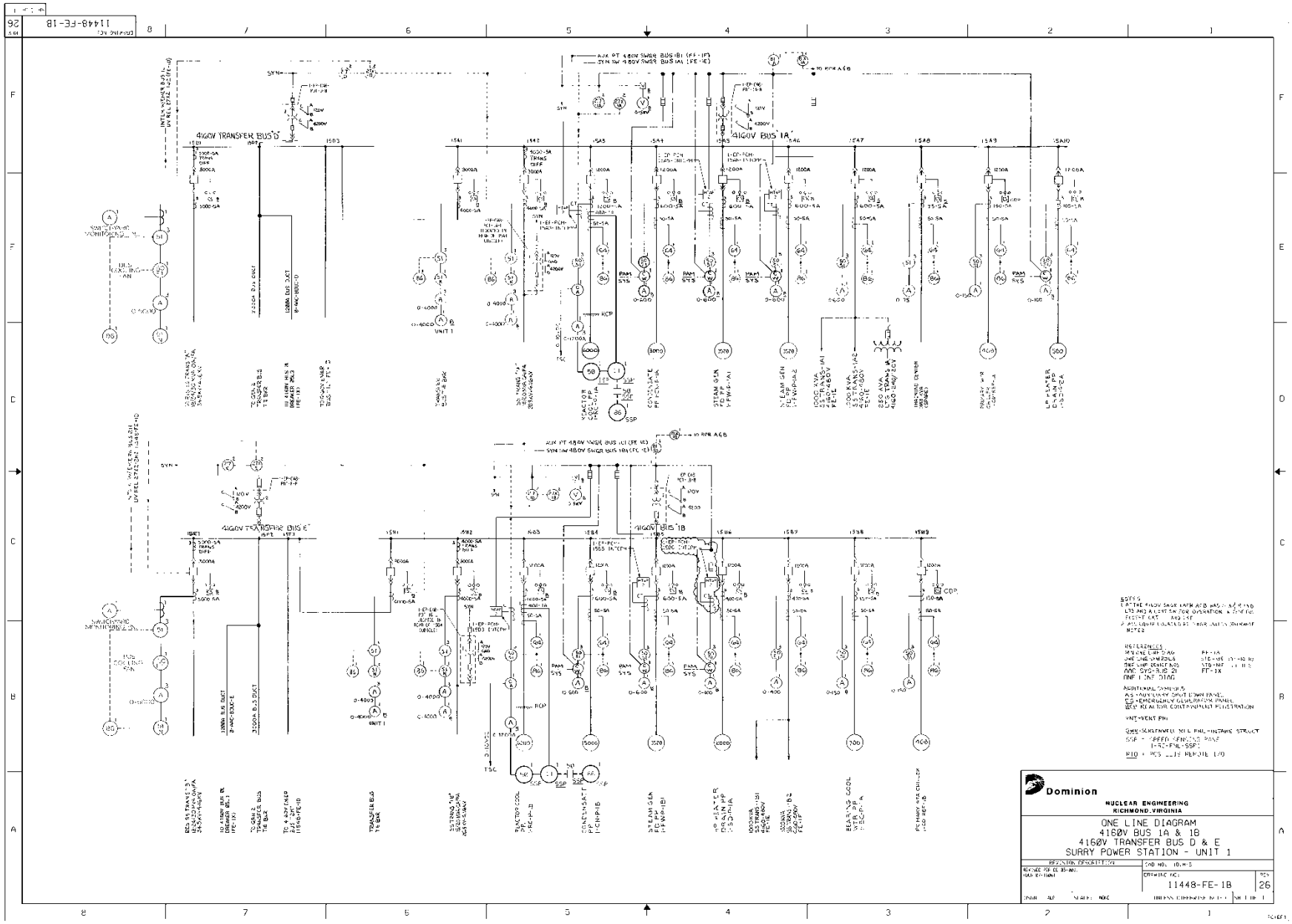

PRIOR TO USING FOR DESIGN WORK CHECK CMIS FOR WORK PENDING

Operator Directions Handout
(TO BE READ TO APPLICANT BY EXAMINER)

Task

- Task may be PERFORMED in the classroom.

Directions

The evaluator will explain the initial conditions of the task to be performed and will provide the initiating cue. Ensure you indicate to the evaluator when you understand your assigned task.

Initial Conditions

- It has been reported that the outboard pump seal has failed on 1-BC-P-1A and is leaking excessively. The shift secured 1-BC-P-1A and placed 1-BC-P-1B in service.
- You are to determine the electrical and mechanical tagging boundaries that will allow maintenance to safely replace the pump seal on 1-BC-P-1A after the tags have been hung and associated piping drained.
- Use the attached table to identify all components and their required positions. The number of blanks on this table does not indicate the number of steps in the tagout or the number of components to be tagged.
- The order in which tags should be placed is not necessary.
- When you finish identifying the tagging boundary, inform an examiner.
- The computerized Tagging Systems are not operational and may not be used for this task.

Initiating Cues

- It has been reported that the outboard pump seal has failed on 1-BC-P-1A and is leaking excessively. The shift secured 1-BC-P-1A and placed 1-BC-P-1B in service.

- I am the Nuclear Shift Manager. I need you to determine the electrical and mechanical tagging boundaries that will allow maintenance to safely fix the pump seal on 1-BC-P-1A.

Operator Directions Handout
(TO BE GIVEN TO APPLICANT)

Initial Conditions

- It has been reported that the outboard pump seal has failed on 1-BC-P-1A and is leaking excessively. The shift secured 1-BC-P-1A and placed 1-BC-P-1B in service.
- You are to determine the electrical and mechanical tagging boundaries that will allow maintenance to safely replace the pump seal on 1-BC-P-1A after the tags have been hung and associated piping drained.
- Use the attached table to identify all components and their required positions. The number of blanks on this table does not indicate the number of steps in the tagout or the number of components to be tagged.
- The order in which tags should be placed is not necessary.
- When you finish identifying the tagging boundary, inform an examiner.
- The computerized Tagging Systems are not operational and may not be used for this task.

Initiating Cues

- It has been reported that the outboard pump seal has failed on 1-BC-P-1A and is leaking excessively. The shift secured 1-BC-P-1A and placed 1-BC-P-1B in service.

- I am the Nuclear Shift Manager. I need you to determine the electrical and mechanical tagging boundaries that will allow maintenance to safely fix the pump seal on 1-BC-P-1A.

(TO BE GIVEN TO APPLICANT)

	Component ID Number / Name	Position	Danger Tag Required? (Yes / No)
1			
2			
3			
4			
5			
6			
7			
8			
9			
10			
11			
12			
13			
14			
15			
16			
17			
18			

19			
20			
21			
22			
23			
24			
25			

U.S. Nuclear Regulatory Commission
Surry Power Station

SR10301
Administrative Job Performance Measure 2.3.4

Applicant_____ Start Time_____

Examiner_____

Date _____ Stop Time_____

Title

Determine the Stay Time of an Operator in a Radiological Area without Exceeding Administrative Limits.

K/A: G2.3.4 – Knowledge of radiation exposure limits under normal or emergency conditions. (3.2/3.7)

Applicability	**Est Completion Time**	**Actual Time**
RO/SRO(I)	20 Minutes	_____

Conditions

- Task is to be PERFORMED in the SIMULATOR or CLASSROOM.

Standards

- Determines if an operator can spend in a radiological area without exceeding administrative dose limits and also determines how long an operator can remain in the radiological area assuming extensions are authorized.

Initiating Cues

- Given simulated plant conditions, determine how long an operator can work in a radiological are without exceeding administrative dose limits. Also, assuming the maximum dose limit extension is authorized, how long can an operator perform work in a radiological area.

Initial Conditions

- I am the Nuclear Shift Manager. I need you to perform work in an area with a general dose rate of 400 mrem/hour. I anticipate that the work I need you to perform will take approximately 6 hours.

- Based on the dose that you have received this year, you have already been upgraded to receive the Annual Administrative Dose Limit. I need you to tell me how long you can perform work in that area without requiring a further dose limit extension.

- It is currently the fourth quarter of the year and the dose you have received during the year is as follows:

    - Quarter #1 (January – March): 0.68 Rem
    - Quarter #2 (April – June): 0.43 Rem
    - Quarter #3 (July – September): 0.59 Rem
    - Quarter #4 (October – **Today**): 0.10 Rem

- Finally, assuming that I am able to receive the maximum dose limit extension for you, inform me of how long you will be able to can perform work in that area and if you will be able to complete the job without assistance.

- When you have completed this task please inform me of the results.

Terminating Cues

- Determination that work in the RCA cannot be performed without an extension and accurate stay time determination following maximum dose limit extension.

Procedures

- VPAP-2101, Radiological Protection Program
- RP-AA-105, External Radiation Exposure Control Program
- C-HP-1031.024, Attachment 2

Tools and Equipment

- Calculator
- Computer with only access to Webtop

Safety Considerations

- None

Notes

Performance Checklist

Notes to the Evaluator.

- Task critical elements are bolded and noted by the words "Critical Step" at the end of the step.
- **START TIME:**

STEP 1: Answer to first question by the Shift Manager: Based on the dose that you have received this year, I need you to tell me how long you can perform work in that area without requiring a dose limit extension and if you will be able to complete the job without assistance (assuming no dose extensions to the administrative limits). **STANDARD:** (a) Calculates dose received year to date as follows: 680 mrem + 430 mrem + 590 mrem + 100 mrem = 1800 mrem. (b) Notes that the yearly dose limit without extension is 2000 mrem (c) Determines margin to yearly limit: 2000 – 1800 = 200 mrem **(d) Calculates Stay Time: 200 mrem / 400 mrem/hour = 0.5 hours.** **This is a Critical Step** **(e) Notes that the 6 hour task cannot be performed without assistance.** **This is a Critical Step.** **EVALUATOR'S NOTE:** • Administrative limit is 2 Rem/year, with RCA lockout at 85% of administrative limit • Can get extended to 3 Rem/Year with worker, manager and RP Manager approval. • Can get extended to 5 Rem/year with worker, manager, RP Manager and Site VP approval.	_____ **SAT** _____ **UNSAT**

COMMENTS:	

STEP 2:

Answer to second question by the Shift Manager:

Finally, assuming that I am able to receive the maximum dose limit extension for you, inform me of how long you will be able to can perform work in that area and if you will be able to complete the job without assistance.

STANDARD:

(a) Calculates dose received year to date as follows:
680 mrem + 430 mrem + 590 mrem + 100 mrem = 1800 mrem.

(b) Notes that the maximum yearly dose limit with extension is 5000 mrem

(c) Determines margin to yearly limit: 5000 – 1800 = 3200 mrem

(d) Calculates Stay Time: 3200 mrem / 400 mrem/hour = 8 hours.
This is a Critical Step

(e) Notes that the 6 hour task can be performed without assistance.
This is a Critical Step.

EVALUATOR'S NOTE:

- Administrative limit is 2 Rem/year, with RCA lockout at 85% of administrative limit
- Can get extended to 3 Rem/Year with worker, manager and RP Manager approval.
- Can get extended to 5 Rem/year with worker, manager, RP Manager and Site VP approval.
- ***A candidate may state 6 hours for part (d), as this is the projected time to complete the job. Follow-up question concerning how the candidate arrived at 6 hours may be necessary to determine if the candidate is documenting actual stay time vice job completion time.***

COMMENTS:

_____ **SAT**

_____ **UNSAT**

STEP 3: Reports task is complete. **STANDARD:** (a) Verbal or written status report that the work cannot be done without assistance if a dose limit extension is not given and that with the extension the work can be performed without assistance. **EVALUATOR'S NOTE:** • Acknowledge the completion of the task. **COMMENTS:**	_____ **SAT** _____ **UNSAT**

STOP TIME:

Operator Directions Handout
(TO BE READ TO APPLICANT BY EXAMINER)

Task

- Task may be PERFORMED in the simulator or classroom.
- Correctly determines the ability of an operator to perform a job in the RCA with or without an extension and the time the operator can perform that job without an extension.

Directions

The evaluator will explain the initial conditions of the task to be performed and will provide the initiating cue. Ensure you indicate to the evaluator when you understand your assigned task.

Initial Conditions:

- I am the Nuclear Shift Manager. I need you to perform work in an area with a general dose rate of 400 mrem/hour. I anticipate that the work I need you to perform will take approximately 6 hours.

- Based on the dose that you have received this year, you have already been upgraded to receive the Annual Administrative Dose Limit. I need you to tell me how long you can perform work in that area without requiring a further dose limit extension.

- It is currently the fourth quarter of the year and the dose you have received during the year is as follows:

    - Quarter #1 (January – March): 0.68 Rem
    - Quarter #2 (April – June): 0.43 Rem
    - Quarter #3 (July – September): 0.59 Rem
    - Quarter #4 (October – **Today**): 0.10 Rem

- Finally, assuming that I am able to receive the maximum dose limit extension for you, inform me of how long you will be able to can perform work in that area and if you will be able to complete the job without assistance.

Initiating Cues:

- Answer the two radiological control questions posed by the Nuclear Shift Manager and place your responses on the paper containing the questions.
- When you have completed this task please inform me of the results.

Operator Directions Handout
(TO BE GIVEN TO APPLICANT)

Initial Conditions:

- I am the Nuclear Shift Manager. I need you to perform work in an area with a general dose rate of 400 mrem/hour. I anticipate that the work I need you to perform will take approximately 6 hours.

- Based on the dose that you have received this year, you have already been upgraded to receive the Annual Administrative Dose Limit. I need you to tell me how long you can perform work in that area without requiring a further dose limit extension.

- It is currently the fourth quarter of the year and the dose you have received during the year is as follows:

    - Quarter #1 (January – March): 0.68 Rem
    - Quarter #2 (April – June): 0.43 Rem
    - Quarter #3 (July – September): 0.59 Rem
    - Quarter #4 (October – **Today**): 0.10 Rem

- Finally, assuming that I am able to receive the maximum dose limit extension for you, inform me of how long you will be able to can perform work in that area and if you will be able to complete the job without assistance.

Initiating Cues:

- Answer the two radiological control questions posed by the Nuclear Shift Manager and place your responses on the paper containing the questions.

- When you have completed this task please inform me of the results.

Shift Manager Questions and Operator Answers
(TO BE GIVEN TO APPLICANT)

Question #1:

- Based on the dose that you have received this year, I need you to tell me how long you can perform work in that area without requiring a dose limit extension and if you will be able to complete the job without assistance (assuming no dose extensions to the administrative limits).

Can be in the radiation area for: _____ minutes / hours (circle one)

Can complete the job without a dose extension in the allotted time: YES / NO (circle one)

Question #2:

- Assuming that I am able to receive the maximum dose limit extension for you, inform me of how long you will be able to can perform work in that area and if you will be able to complete the job without assistance.

Can be in the radiation area for: _____ minutes / hours (circle one)

After receiving the maximum extension can complete the job in the allotted time: YES / NO (circle one)

U.S. Nuclear Regulatory Commission
Surry Power Station

SR10301
Administrative Job Performance Measure 2.4.41
TIME CRITICAL

Applicant_____ Start Time_____

Examiner_____

Date _____ Stop Time_____

Title

CLASSIFY AN EVENT

K/A: G2.4.41 – Knowledge of the emergency action level thresholds and classifications. (2.9/4.6)

Applicability	**Est Completion Time**	**Actual Time**
SRO(I)	20 Minutes (Time Critical)	_____

Conditions

- Task is to be PERFORMED in the SIMULATOR or CLASSROOM.
- A simulated SITE AREA EMERGENCY is in progress.

Standards

- Declares a Site Area Emergency using EAL Identifier SS1.2 in accordance with EPIP-1.01/EAL Table.

Initiating Cues

- Given simulated plant conditions, utilize EPIP-1.10 and determine if classification is warranted.

Initial Conditions

- **This JPM is TIME CRITICAL.**

- You are the Nuclear Shift Manager. An event is in progress with plant conditions as follows:
    - The AAC DG is tagged out for governor valve replacement. The Plan of the Day (POD) shows that the diesel will be returned to service next weekend.
    - Both Units were initially at 100% power when a severe thunderstorm passed through the area.
    - Approximately 50 minutes ago, the station experienced a loss of the 'D' Transfer bus as the 'A' Reserve Station Service Transformer was struck and damaged by lightning (no fire).
        - At that time, #3 EDG tripped on overspeed during start-up. Mechanics reset the overspeed, and when started, the #3 EDG experienced extremely high vibrations and the casing was penetrated by a connecting rod, and #3 EDG was subsequently tripped.
    - Approximately 35 minutes ago, Unit 1 reactor tripped due to a fault on the 'A' DC bus that damaged the 'A' Station Battery. Due to the significant amount of damage to the 'A' Station Battery, the electricians are estimating 2 – 3 days before the 'A' DC bus is restored.
    - Approximately 10 minutes ago, while performing 1-AP-10.06, Loss of DC Power, the BOP reported that the 1B DC bus was 102 Volts and decreasing.

- Here is a copy of EPIP-1.01, Emergency Manager Controlling Procedure. I need you to perform EPIP-1.01 and determine if this event should be classified.
- When you finish the actions necessary to accomplish this, please inform me of your classification, if necessary.

Terminating Cues

- Report of classification determination.

Procedures

- EPIP-1.01, Emergency Manager Controlling Procedure (Revision 52)

Tools and Equipment

- None

Safety Considerations

- None

Notes

Performance Checklist

Notes to the Evaluator.

- Task critical elements are bolded and noted by the words “Critical Step” at the end of the step.
- **START TIME:**

STEP 1: Caution and Note prior to step 1. **CAUTION:** Declaration of the highest emergency class for which an Emergency Action Level is exceeded shall be made. **NOTE:** The PCS is potentially unreliable in the event of an earthquake. Therefore, PCS parameters should be evaluated for accuracy should an earthquake occur. **STANDARD:** (a) Acknowledges CAUTION and NOTE **EVALUATOR’S NOTE:** • ***Candidate may choose to make EAL classification straight from EAL tables and NOT implement steps of EPIP-1.01. Steps are given here as guidance. Critical task time ends when the classification is determined regardless of determination method.*** **COMMENTS:**	_____ **SAT** _____ **UNSAT**

STEP 2: Step1 - EVALUATE EMERGENCY ACTION LEVELS: a) Determine event category using the applicable Emergency Action Level Matrix: • Hot Conditions (RCS > 200 °F) • Cold Conditions (RCS ≤ 200 °F) b) Review EAL associated with event category c) Use Control Room monitors, PCS, and outside reports to get indications of emergency conditions listed in the EAL Matrix d) Verify EAL - CURRENTLY EXCEEDED e) Initiate a chronological log of events **STANDARD:** (a) Refers to the HOT chart (b) Determines event category to be Loss of Power. (c) Refers to given conditions to determine EAL applicability **(d) Determines EAL Identifier SS1.2 conditions are met and declares a Site Area Emergency on this Identifier.** **This is a Critical Step.** (e) Initiates (or verbalizes) a chronological log of events. **EVALUATOR'S NOTE**: • If candidate makes EAL determination at this step, record stop time. **COMMENTS:** **STOP CRITICAL TASK TIME:** _____ **TIME CRITICAL- 15 minutes**	_____ **SAT** _____ **UNSAT**

STEP 3:

Step 2 - RECORD EAL IDENTIFIER, TIME EMERGENCY DECLARED AND SM/SEM NAME:

Emergency Classification	EAL Identifier	Time Declared	SM /SEM Name
Notification of Unusual Event			
Alert			
Site Area Emergency			
General Emergency			

STANDARD:

(a) Completes the table as indicated below:

Emergency Classification	EAL Identifier	Time Declared	SM /SEM Name
Notification of Unusual Event			
Alert			
Site Area Emergency	SS1.2	TBD	TBD
General Emergency			

EVALUATOR'S NOTE:

- Completion of this table is not required for successful completion of the JPM.

COMMENTS:

_____ **SAT**

_____ **UNSAT**

STEP 5: Reports declaration of the event in progress. **STANDARD:** **(a) Verbal or written status report that a Site Area Emergency should be declared on Tab SS1.2. This is a Critical Step if not already performed.** **EVALUATOR'S NOTE:** • Acknowledge the completion of the task. **COMMENTS:** **STOP CRITICAL TASK TIME:** _____ **TIME CRITICAL- 15 minutes**	_____ **SAT** _____ **UNSAT**

STOP TIME:

_____

_____

_____

_____

_____

_____

_____

_____

_____

Operator Directions Handout
(TO BE READ TO APPLICANT BY EXAMINER)

Task

- Task may be PERFORMED in the simulator or classroom.
- Classify an event in accordance with EPIP-1.01, Emergency Manager Controlling Procedure.

Directions

The evaluator will explain the initial conditions of the task to be performed and will provide the initiating cue. Ensure you indicate to the evaluator when you understand your assigned task.

Initial Conditions:

- **This JPM is TIME CRITICAL.**

- You are the Nuclear Shift Manager. An event is in progress with plant conditions as follows:
    - The AAC DG is tagged out for governor valve replacement. The Plan of the Day (POD) shows that the diesel will be returned to service next weekend.
    - Both Units were initially at 100% power when a severe thunderstorm passed through the area.
    - Approximately 50 minutes ago, the station experienced a loss of the 'D' Transfer bus as the 'A' Reserve Station Service Transformer was struck and damaged by lightning (no fire).
        - At that time, #3 EDG tripped on overspeed during start-up. Mechanics reset the overspeed, and when started, the #3 EDG experienced extremely high vibrations and the casing was penetrated by a connecting rod, and #3 EDG was subsequently tripped.
    - Approximately 35 minutes ago, Unit 1 reactor tripped due to a fault on the 'A' DC bus that damaged the 'A' Station Battery. Due to the significant amount of damage to the 'A' Station Battery, the electricians are estimating 2 – 3 days before the 'A' DC bus is restored.
    - Approximately 10 minutes ago, while performing 1-AP-10.06, Loss of DC Power, the BOP reported that the 1B DC bus was 102 Volts and decreasing.

Initiating Cues:

- Here is a copy of EPIP-1.01, Emergency Manager Controlling Procedure. I need you to perform EPIP-1.01 and determine if this event should be classified.

- When you finish the actions necessary to accomplish this, please inform me of your classification, if necessary.

Operator Directions Handout
(TO BE GIVEN TO APPLICANT)

Initial Conditions:

- **This JPM is TIME CRITICAL.**

- You are the Nuclear Shift Manager. An event is in progress with plant conditions as follows:
  - The AAC DG is tagged out for governor valve replacement. The Plan of the Day (POD) shows that the diesel will be returned to service next weekend.
  - Both Units were initially at 100% power when a severe thunderstorm passed through the area.
  - Approximately 50 minutes ago, the station experienced a loss of the 'D' Transfer bus as the 'A' Reserve Station Service Transformer was struck and damaged by lightning (no fire).
    - At that time, #3 EDG tripped on overspeed during start-up. Mechanics reset the overspeed, and when started, the #3 EDG experienced extremely high vibrations and the casing was penetrated by a connecting rod, and #3 EDG was subsequently tripped.
  - Approximately 35 minutes ago, Unit 1 reactor tripped due to a fault on the 'A' DC bus that damaged the 'A' Station Battery. Due to the significant amount of damage to the 'A' Station Battery, the electricians are estimating 2 – 3 days before the 'A' DC bus is restored.
  - Approximately 10 minutes ago, while performing 1-AP-10.06, Loss of DC Power, the BOP reported that the 1B DC bus was 102 Volts and decreasing.

Initiating Cues:

- Here is a copy of EPIP-1.01, Emergency Manager Controlling Procedure. I need you to perform EPIP-1.01 and determine if this event should be classified.

- When you finish the actions necessary to accomplish this, please inform me of your classification, if necessary.

- **Record classification and EAL identifier (if any):**

  _____ _____

EMERGENCY CLASSIFICATION PROCEDURES NOT INCLUDED.

Dominion	PROCEDURE NO: 1-OPT-CH-002
SURRY POWER STATION	REVISION NO: 47
PROCEDURE TYPE: **OPERATIONS PERIODIC TEST**	UNIT NO: 1

PROCEDURE TITLE:

CHARGING PUMP OPERABILITY AND PERFORMANCE TEST FOR 1-CH-P-1B

IST	PMT	PSA	REACT MGT			

REVISION SUMMARY:

Revised in response to Operations Feedback, OP FB 09-0122.

- Added Steps 6.6.8 and 6.6.9 to place controllers in Manual.
- Revised Step 6.6.10 to delete substeps for placing controllers in Manual.

Revised in response to Operations Feedback, OP FB 09-0191.

- Revised Steps 6.3.3, 6.4.3, 6.5.6.a, 6.7.4, and Step 9 on Attachment 8 to allow pump flush even if RCS to pump differential boron is less than 360 ppm
- Reordered Attachment 8, Step 10 substeps

Administrative Correction.

- Incorporate ET-CME-09-0027 to update ME-0771 to Revision 3 at Step 2.3.30

CONTINUOUS USE

TABLE OF CONTENTS

Section		Page
1.0	PURPOSE	4
2.0	REFERENCES	5
3.0	INITIAL CONDITIONS	9
4.0	PRECAUTIONS AND LIMITATIONS	9
5.0	SPECIAL TOOLS AND EQUIPMENT	12
6.0	INSTRUCTIONS	13
6.1	Work Preparation	13
6.2	Fill, Vent, and Return to Service Valve Alignment for 1-CH-P-1B	15
6.3	Placing 1-CH-P-1A in Service and Stopping 1-CH-P-1B	23
6.4	Placing 1-CH-P-1C NORM FEED in Service and Stopping 1-CH-P-1B	26
6.5	Discharge Check Valve Close Test, MOV Timing, Lube Oil TCV Timing and Starting 1-CH-P-1B 29	
6.6	1-CH-P-1B Performance Test	38
6.7	1-CH-P-1B Return to Service with 1-CH-P-1C, ALT FEED, in Service	43
6.8	Testing of Charging Pump MOVs	49
6.9	Obtaining Oil Samples	51
6.10	Discharge Check Valve Backleakage Test on Non-running Charging Pump	56
7.0	FOLLOW-ON	58

TABLE OF CONTENTS

Section		Page
ATTACHMENTS		
1	1-CH-P-1B Performance Test Data Sheet	64
2	1-CH-P-1B Vibration, Flow and ΔP Data Table (> 350°F)	68
3	1-CH-P-1B Vibration, Flow and ΔP Data Table (< 350°F)	69
4	MOV Stroke Time Data Table	70
5	Charging System External Leak Inspection Diagram	71
6	Venting 1-CH-FT-1182	72
7	Venting of Charging Pump Seals	74
8	Flushing Charging Pump To Reduce Boron Differential	75
9	Setup and Installation / Removal of the Accu-Cal Plus Digital Precision Test Gauge (I&C)	77

1.0 PURPOSE

1.1 To demonstrate and document satisfactory performance of 1-CH-P-1B, CHARGING PUMP, once each quarter. **(Reference 2.4.7)**

1.2 To demonstrate and document satisfactory performance of 1-CH-P-1B, CHARGING PUMP, for Return To Service after maintenance.

1.3 To document that the System External Leakage is within limits once each quarter.

1.4 To test 1-CH-267, Charging Pump Discharge Check Valve, in the closed and open position once each quarter, or to determine backleakage as required.

1.5 To test 1-CH-265, Charging Pump Miniflow Recirc Check Valve, in the open position once each quarter, or to determine backleakage as required.

1.6 To test 1-CH-230, VCT Supply Discharge Check Valve, in the open position once each quarter.

1.7 To demonstrate and document satisfactory stroke once each quarter of the following:

- 1-CH-MOV-1275B, CHG PUMP MINIFLOW RECIRC VALVES PUMP B
- 1-CH-MOV-1286B, CHG PUMP B DISCH NORM
- 1-CH-MOV-1287B, CHG PUMP B DISCH ALT

1.8 To demonstrate and document satisfactory stroke of 1-SW-TCV-108B once each quarter.

1.9 Performance of this procedure satisfies the requirements of Technical Specifications listed in Subsection 2.2 and the Inservice Testing Program Plan for Pumps and Valves.

2.0 REFERENCES

2.1 Source Documents

2.1.1 UFSAR Section 9.1, Chemical and Volume Control System

2.2 Technical Specifications Surry Power Station Units 1 and 2

2.2.1 Technical Specifications, Section 3.2.B.1.a.2, Charging Pump Operability

2.2.2 Technical Specifications, Section 3.2.B.1.b.2, Charging Pump Operability

2.2.3 Technical Specifications, Section 3.2.B.2, Unit 2 Charging Pump Availability

2.2.4 Technical Specifications, Section 3.3.A.3.a, Safety Injection Subsystem Operability

2.2.5 Technical Specification, Section 6.4.I, Inservice Testing Program

2.2.6 Technical Specification 4.11.C.2

2.2.7 Technical Specifications, Section 6.4.K, Systems Integrity

2.3 Technical References

2.3.1 Inservice Testing Program Plan for Pumps and Valves

2.3.2 EWR 93-064, MI Pumps Acceptance Criteria OMa-1988 Part 6 Code

2.3.3 1-NPT-ZZ-001, Quantification of External System Leakage

2.3.4 11448-FM-88B, Sheet 2, Chemical and Volume Control System

2.3.5 11448-FM-71B, Sheet 1 and 2, Circulating and Service Water System

2.3.6 11448-FM-075C, Sheet 1, Compressed Air System

2.3.7 Deviation Report S-92-0948, 2-SW-124 Blockage

2.3.8 DCP 88-037-1, ASME Section XI Instrumentation

2.3.9 EWR 89-442, Evaluate CH Pump Lube Oil System

2.3.10 1-OPT-CH-001, Charging Pump Operability and Performance Test for 1-CH-P-1A

2.3.11 1-OPT-CH-003, Charging Pump Operability and Performance Test for 1-CH-P-1C

2.3.12 DCP 92-064, Charging Pump Logic Modifications

2.3.13 EWR 94-013, CH Pumps Acceptance Criteria during Shutdown

2.3.14 EWR 94-015, IST Valves Acceptance Criteria Stroke Time

2.3.15 DCP 92-27-3, Installation of stroke timing valve 1-IA-1601

2.3.16 Deviation Report S-95-1877, Charging Pump 2C recirc flow rate

2.3.17 Memo from BW/IP International, Inc. to Terri Stahl, Virginia Electric Power Co., June 30, 1988

2.3.18 DCP 95-006, Charging Pump Service Water Pipe Replacement

2.3.19 Engineering Transmittal (ET) No. S-96-0263, Rev. 0, Stroke Time Acceptance Criteria for 1-SW-TCV-108A, B, C and 2-SW-TCV-208A, B, C

2.3.20 DCP 94-006, Charging Pump Seal Replacement

2.3.21 Engineering Transmittal (ET) No. S-97-0280, CH Pump IST Reference Value Change

2.3.22 ET S-00-0127, Revision to IST Parameters for 1-CH-P-1B

2.3.23 DCP 01-008, Instrument and Controls Upgrade Project, Unit 1

2.3.24 ET S-03-0090, Rev. 2, IST Acceptance Criteria for 1-CH-P-1B Following Pump Replacement

2.3.25 ET S-04-0037, Revised IST Acceptance Criteria for 1-CH-P-1B and 1-CH-P-1C

2.3.26 ET S-04-0068, Effect of Starting an Idle Charging Pump on RCS Boron Concentration

2.3.27 ET-S-05-0008, Rereferencing of Unit 1 Motor Operated Valve Stroke Time, 1-CH-MOV-1287B

2.3.28 ASME OM Code, Section IST, Rules for Inservice Testing of Light-Water Reactor Nuclear Power Plants

2.3.29 ET-CME-07-0012, Evaluation of CH Pump Discharge Check Valve Backleakage

2.3.30 Calculation ME-0771, Rev. 3, Minimum Delivered HHSI Flow for LOCA and MSLB Analyses and CH/HHSI Pump Flow Test Acceptance Criteria, Surry 1 & 2

2.4 Commitment Documents

2.4.1 Station Commitment Action Request Form (SCARF) 88-5188, Hydrogen Buildup in a Confined Area

2.4.2 CTS 1317, Charging Pump Operation

2.4.3 CTS 1801, Charging Pump Temperature Control Valve

2.4.4 QA Audit 87-01, Finding 2, Recording Work Order Number and Mark Number after maintenance

2.4.5 CTS 635, Verify damper operation and testing

2.4.6 Safety Evaluation 91-238

2.4.7 CTS 1809, CH Pump Configuration Outside Design Basis

2.4.8 Station Deviation S-92-1515

2.4.9 CTS 2646, Technical Specification Amendment #199

2.4.10 CTS 3368, Revise procedures that quantify external loop leakage to add 7-day Administrative Clock in the event of unsatisfactory leakage levels

2.4.11 Station Deviation S-96-0803

2.4.12 NAF 99-0035 Rev 54, Risk Assessment Guidelines for MRule

2.4.13 DR S-2000-0532, External Leakage Quantification

2.4.14 PI S-2001-0466, Maintenance activity, was performed with no prior PSA evaluation

2.4.15 PI S-2002-0044, Add OPs requirement for oil sampling

2.4.16 PI S-2002-3606, Procedural inconsistencies with venting CHG pumps

2.4.17 PI S-2003-0707, Wrong Oil Sample Volume

2.4.18 PI S-2003-2106, Pumps in PTL When Sampling Oil

2.4.19 PI S-2004-1773, No oil flow to pump bearings

2.4.20 PI S-2004-0495 (OE 17609), Reactivity Excursion when starting CHG Pump

2.4.21 PI S-2005-4176, ITC-SA-05-18 In-Service Testing (IST) Program for Pumps

2.4.22 CR 9110, Evaluate Charging Pump Discharge Check Valve Criteria

2.4.23 ACE356, Determining Recirc Check Valve Backleakage

2.4.24 CR010705, High Aux Lube Oil Pump Discharge Pressure

Init **Verif**

3.0 INITIAL CONDITIONS

N/A de 3.1 This procedure has PSA significance. IF this procedure is being performed on a day other than its POD scheduled date, THEN notify Shift Supervision that a PSA evaluation is required for the performance of this procedure. **(Reference 2.4.14)**

Ble 3.2 Unit 1 is at stable conditions and no power changes are anticipated.

Ble 3.3 The Volume Control Tank (VCT) pressure is within the normal operating band. (greater than 15 psig)

Ble 3.4 With the Reactor critical, at least two boron injection subsystems shall be operable for performance of this procedure IAW Technical Specification 3.2. Performance with less than two pumps operable may result in entry into a six hour LCO IAW Technical Specification 3.0.1 and will require FSRC approval before a procedure change is implemented.

4.0 PRECAUTIONS AND LIMITATIONS

4.1 No more than one Charging Pump may be tested at a time.

4.2 This procedure assumes at least two Charging Pumps are operable when the Reactor is Critical. Other conditions may require re-evaluation of applicable LCOs to determine the most Limiting Condition.

4.3 The Charging Pump Miniflow Recirc Valves, 1-CH-MOV-1275B and 1-CH-MOV-1373, must remain open during pump operation to prevent pump damage during the performance of this test.

4.4 To prevent damage to the pump, a Charging Pump should not be operated more than three hours with both discharge valves closed.

4.5 The Charging Pump should be shut down as soon as possible if any of the following temperature limits is exceeded.

- Oil Cooler outlet oil temperature upper operating limit is 160°F.
- Oil Cooler outlet oil temperature lower operating limit is 28°F. Oil misting has been observed with temperature less than 60°F. Misting is expected to stop as lube oil temperature increases. Routine pump starts should be avoided until the temperature is above 60°F and preferably in the normal operating band between 80°F and 120°F.
- The upper administrative limit for the Charging Pump bearings is 180°F.

4.6 The undervoltage trip of Charging Pump A is automatically enabled when Charging Pump C, NORM FEED, is Racked In <u>and</u> Charging Pump C, NORM FEED, breaker closed. The undervoltage trip of Charging Pump A is automatically disabled when Charging Pump C, NORM FEED, is Racked Out <u>or</u> Charging Pump C, NORM FEED, breaker open.

4.7 Simultaneous operation of two Charging Pumps below 350°F shall be limited to the time required to swap from one Charging Pump to another.

4.8 Shifting of Charging Pumps shall <u>not</u> be performed when the RCS is solid.

4.9 This OPT may be performed with either RHR in service <u>or</u> the Unit at normal RCS operating pressure with approximately 105 gpm letdown.

4.10 The following Charging Pump Motor starting limitations must be observed to prevent motor damage:

- With the motor cold, TWO consecutive starts are allowed.
- With the motor hot, ONE stop and an immediate restart is allowed.

<u>After either of the above conditions has occurred:</u>

- Subsequent motor stop/start cycles may NOT be performed until the motor has been run for at least 15 minutes.

<u>OR</u>

- If the motor is stopped before the 15 minute run is complete, the motor shall stand idle for at least 60 minutes.

4.11 Shift Supervision shall be notified immediately if any malfunctions or abnormal conditions occur.

4.12 A dedicated Operator will be required to obtain oil samples in Subsection 6.9.

4.13 If the difference between RCS boron and Charging pump boron is greater than 360 ppm, the pump must be flushed before it is started to equalize boron concentration. This requirement ensures that the change in RCS temperature will be less than .2°F when the Charging pump is started. **(Ref. 2.4.20)**

4.14 The initials identification block in Subsection 7.3 must be completed before the procedure is closed out.

4.15 A Charging Pump may be started if Aux Lube Oil Pump discharge pressure is greater than 8 psig. In this case, a Condition Report shall be submitted. **(Ref. 2.4.24)**

5.0 SPECIAL TOOLS AND EQUIPMENT

5.1 Microlog Data Collector for vibration

5.2 Stopwatch, for leakage collection timing, stroke timing of MOVs and Lube Oil TCV

5.3 AirCet connection test fitting (only required if 1-SW-TCV-108B will be stroke tested)

5.4 HP approved catch container (for venting 1-CH-FT-1182)

5.5 Three oil sample bottles of 120 mls

5.6 Two 120 ml bottles of motor replacement oil

5.7 One clean container of approximately 500 mls to purge drain line oil sample

5.8 Accu-cal precision test gauge, Model No. 75514-35B55, or equivalent (if required for high accuracy measurement of discharge check valve backleakage in Subsection 6.5 or 6.10)

Init Verif

6.0 INSTRUCTIONS

6.1 Work Preparation

N/A

6.1.1 IF this procedure is used to prove operability of equipment after maintenance, THEN record the Work Order Number and the Equipment Location on Attachment 1, 1-CH-P-1B Performance Test Data Sheet, OR attach a copy of the Work Order Tracking sheet to the completed procedure for multiple Work Orders and note in Operator Comments, Subsection 7.3. Otherwise, enter N/A. **(Reference 2.4.4)**

6.1.2 IF check valve backleakage testing in Subsection 6.5 or 6.10 required, THEN perform the following. Otherwise, enter N/A.

a. Notify I&C of which Charging Pump will be running during test.

b. Have I&C perform Attachment 9 for installation and setup.

6.1.3 Record the SQC Number and Cal Due Date for the Instrumentation and Test Equipment to be used on Attachment 1.

NOTE: This test may be performed at normal RCS operating pressure or with RHR in operation.

6.1.4 Check the RCS/RHR applicability block on Attachment 1.

BC

6.1.5 Verify Plant Conditions with Shift Supervision AND perform all the associated actions. (✓) Enter N/A for the actions not taken.

Status (✓)	Present Conditions	Actions to be Performed
N/A BC	• 1-CH-P-1B needs to be filled and vented **OR** Maintenance has been performed	Perform Subsection 6.2
	• Stop 1-CH-P-1B and start 1-CH-P-1A (so 1-CH-P-1B may be stopped for testing)	Perform Subsection 6.3
	• Stop 1-CH-P-1B and start 1-CH-P-1C, NORM FEED (so 1-CH-P-1B may be stopped for testing)	Perform Subsection 6.4
	• Check Valve test or Stroke test MOVs and Lube Oil TCV (1-CH-P-1B must be stopped)	Perform Subsection 6.5 or Subsection 6.8 (MOV stroke only)
	• Performance test of 1-CH-P-1B only (1-CH-P-1B already running)	Perform Subsection 6.6
✓ BC	• 1-CH-P-1B needs the Quarterly Test (1-CH-P-1B must be stopped)	Perform Subsection 6.5 and Subsection 6.6.
N/A BC	• 1-CH-P-1B needs Return to Service PT performed with 1-CH-P-1C, ALT FEED, in service	Perform Subsection 6.7, then Subsections 6.5 and 6.6
	• Check backleakage on non-running Charging Pump discharge check valve	Perform Subsection 6.10

6.2 Fill, Vent, and Return to Service Valve Alignment for 1-CH-P-1B

N/Ade

6.2.1 Have the Mechanics remove the blank flange and install the pump vent rig on the 1-CH-P-1B casing vent flange. IF pump casing was NOT drained, THEN enter N/A for Steps 6.2.1 through 6.2.30.

6.2.2 Close or verify closed 1-CH-ICV-3522, CH Pump 1B Suct PI-1188 Vent. _____

6.2.3 Close 1-CH-246, Chg Pump B Disch Casing Drain. _____ IV

6.2.4 Close 1-CH-247, Chg Pump B Suct Casing Drain. _____ IV

6.2.5 Close 1-CH-402, Chg Pump B Casing Common Drain. _____ IV

6.2.6 Verify closed 1-CH-261, Chg Pump B Disch Casing Vent. _____

6.2.7 Verify closed 1-CH-262, Chg Pump B Suct Casing Vent. _____

6.2.8 Verify that the pump vent rig is installed. _____

NOTE: The Aux Lube Oil Pump may be started without SW aligned to allow pump shaft rotation during venting.

6.2.9 Verify that the Charging Pump B gearbox oil level is in the operating range. (Gearbox oil level should be greater than $\frac{1}{4}$). _____

6.2.10 Verify closed or close 1J1-1, Bkr 6D, 1-CH-P-110B, Aux Lube Oil Pump. _____ IV

6.2.11 Verify or place Aux Lube Oil Pump in AUTO. _____

N/A

6.2.12 Verify that 1-CH-PI-110B, Aux Lube Oil Pump Discharge Pressure, is between 4 psig and 8 psig. Record Lube Oil Pressure. Submit a Condition Report if Lube Oil Pressure is greater than 8 psig.

Lube Oil Pressure _____ psig

NOTE: A Charging Pump may be started if oil flow can not be verified to bearing(s). Contingency actions for monitoring bearing temperature are in place as a compensatory measure if pump will be started without oil flow to bearing(s).

_____ 6.2.13 Verify oil flow to the pump bearings. Enter N/A if flow can not be verified to bearing(s).

WARNING

Explosion or fire could result if hydrogen from venting is allowed to build up in a confined area. **(Reference 2.4.1)**

Radioactive gases present during venting will not be removed by the vent rig. Pump venting must be done slowly to prevent a buildup of high radioactive gas concentrations.

_____ 6.2.14 Notify Health Physics that Charging Pump venting will be performed.

_____ 6.2.15 IF 0-MCM-0109-01 will be used to fill and vent the CHG pump, THEN enter N/A for steps 6.2.16 through 6.2.26. Otherwise, enter N/A for this step.

_____ 6.2.16 Verify open or open 1J1-2W, Bkr 1C, 1-CH-MOV-1269A, CHG PUMP B SUCT NORM.

NOTE: Continuous communication shall be established with the Control Room during the performance of the following three steps to prevent the loss of VCT level.

_____ 6.2.17 Manually throttle open (ten turns) 1-CH-MOV-1269A, CHG PUMP B SUCT NORM.

NOTE: If the Charging Pump seal was replaced while the pump was out of service, some seal leakage may occur until the seal becomes seated. A small amount of leakage should be considered normal.

N/Ave

6.2.18 Check the pump shaft seals and other valve and piping boundaries for leakage. IF leakage is identified, THEN isolate the leak, if possible, AND notify Shift Supervision.

NOTE: Be prepared to vent 1-CH-PI-1188 as soon as the casing has been vented.

6.2.19 Vent the Charging Pump B casing by performing the following.

a. Vent the Charging Pump B casing by slowly opening the vents until water issues from the vent.

1. 1-CH-261

2. 1-CH-262

b. WHEN water issues from the vent, THEN close the vent valves.

1. 1-CH-261 IV

2. 1-CH-262 IV

6.2.20 Vent 1-CH-PI-1188 by throttling open 1-CH-ICV-3522.
WHEN 1-CH-ICV-3522 is air free, THEN close 1-CH-ICV-3522.

6.2.21 Verify closed or close 1J1-2W, Bkr 1C, 1-CH-MOV-1269A, CHG PUMP B SUCT NORM.

6.2.22 Verify closed or close 1J1-2W, Bkr 2C, 1-CH-MOV-1269B, CHG PUMP B SUCT ALT.

6.2.23 Electrically open 1-CH-MOV-1269A.

N/A

6.2.24 Electrically open 1-CH-MOV-1269B.

6.2.25 Verify electrical operability of 1-CH-MOV-1269A by cycling suction valve twice.

a. Stroke 1-CH-MOV-1269A closed and return to OPEN.

b. Stroke 1-CH-MOV-1269A closed and return to OPEN.

NOTE: Be prepared to vent 1-CH-PI-1188 as soon as the casing has been vented.

6.2.26 Vent the Charging Pump B casing by performing the following.

a. Vent the Charging Pump B casing by slowly opening the vents until water issues from the vent.

1. 1-CH-261

2. 1-CH-262

b. WHEN water issues from the vent, THEN close the vent valves.

1. 1-CH-261 IV

2. 1-CH-262 IV

6.2.27 IF 0-MCM-0109-01 was used to fill and vent the CHG pump, THEN verify that the Mechanics have completed fill and vent. Otherwise, enter N/A.

6.2.28 Vent 1-CH-PI-1188 by throttling open 1-CH-ICV-3522. IV
WHEN 1-CH-ICV-3522 is air free, THEN close 1-CH-ICV-3522 AND install vent cap.

6.2.29 Have the Mechanics remove the pump vent rig and install the blank flange on the Charging Pump B casing vent flange.

N/A

6.2.30 Have the Mechanics do Attachment 7 for venting of Charging Pump seals. IF Mechanical Maintenance determines that seal venting is NOT required, THEN enter N/A for this step and have Mechanical Maintenance sign below, indicating concurrence that seal venting is NOT required.

_____
Mechanical Maintenance

_____ IV 6.2.31 Verify open or open 1-CH-263, Chg Pump B Disch Hdr Sample Isol.

6.2.32 Perform the following breaker manipulations

_____ IV a. Verify closed or close 1J1-2W, Bkr 1C, 1-CH-MOV-1269A, CHG PUMP B SUCT NORM.

_____ IV b. Verify closed or close 1J1-2W, Bkr 2C, 1-CH-MOV-1269B, CHG PUMP B SUCT ALT.

_____ IV c. Verify closed or close 1J1-2W, Bkr 4C, 1-CH-MOV-1286B, CHG PUMP B DISCH NORM

_____ IV d. Verify closed or close 1J1-2W, Bkr 5B, 1-CH-MOV-1287B, CHG PUMP B DISCH ALT

_____ IV e. Verify closed or close 1H1-2S, Bkr 7B, 1-CH-MOV-1275B, CHG PUMP MINIFLOW RECIRC VALVES PUMP B

6.2.33 Perform the following.

_____ a. Verify open or open 1-CH-MOV-1269A.

_____ b. Verify open or open 1-CH-MOV-1269B.

_____ c. Verify open or open 1-CH-MOV-1286B.

_____ d. Verify open or open 1-CH-MOV-1287B.

N/A AG

e. Verify open or open 1-CH-MOV-1275B.

IV 6.2.34 Verify open or open 1-CC-706, CH Pump Seal Clrs 7C/D CC Inlet Isol.

IV 6.2.35 Verify open or open 1-CC-695, CH Pump Seal Clrs 7C/D CC Otlt FI-118B Inlet Isol.

IV 6.2.36 Throttle 1-CC-773, CH Pump Seal Clrs 7C/D CC Otlt FI-118B Otlt Isol, to greater than or equal to 7.5 gpm. (Charging Pump CC flow should be throttled to balance total flow approximately equally between pumps)

IV 6.2.37 Verify closed or close 1-SW-183, CHG Pump LO Clr 5B SW Outlet Drain. IF pump Service Water was NOT tagged out, THEN enter N/A for Step 6.2.37 through Step 6.2.44.

6.2.38 Verify removed or remove the hose from 1-SW-183.

IV 6.2.39 Verify closed or close 1-SW-185, CHG Pump LO Clr 5B SW Inlet Vent.

IV 6.2.40 Verify closed or close 1-SW-184, CHG Pump LO Clr 5B SW Inlet Drain.

IV 6.2.41 Verify closed or close 1-SW-186, CHG Pump LO Clr 5B SW Outlet Vent.

IV 6.2.42 Verify open or open 1-SW-122, CHG Pump LO Clr 5B SW Inlet.

6.2.43 Vent air from the LO Clr Service Water System by opening and then closing the following vents until water issues from the vent. IF Service Water Cooling Water was not drained, THEN enter N/A.

a. 1-SW-185

b. 1-SW-186

N/A 6 _____ IV

6.2.44 Verify open or open 1-SW-898, Chg Pump LO Clr 5B SW Outlet.

_____ 6.2.45 Verify that the Charging Pump B gearbox oil level is in the operating range. (Gearbox oil level should be greater than $\frac{1}{4}$). Enter N/A for Steps 6.2.45 through 6.2.49 if Aux Lube Oil Pump already running.

_____ IV 6.2.46 Verify closed or close 1J1-1, Bkr 6D, 1-CH-P-110B, Aux Lube Oil Pump.

_____ 6.2.47 Verify or place Aux Lube Oil Pump in AUTO.

_____ 6.2.48 Verify that 1-CH-PI-110B, Aux Lube Oil Pump Discharge Pressure, is between 4 psig and 8 psig. Record Lube Oil Pressure. Submit a Condition Report if Lube Oil Pressure is greater than 8 psig.

Lube Oil Pressure _____ psig

NOTE: A Charging Pump may be started if oil flow can not be verified to bearing(s). Contingency actions for monitoring bearing temperature are in place as a compensatory measure if pump will be started without oil flow to bearing(s).

_____ 6.2.49 Verify oil flow to the pump bearings. Enter N/A if flow can not be verified to bearing(s).

_____ 6.2.50 IF 1-CH-P-1B is already connected to the Bus, THEN enter N/A for Steps 6.2.51 and 6.2.52. IF 1-CH-P-1B is being returned to service with 1-CH-P-1C, ALT FEED, running, THEN enter N/A for Steps 6.2.51 and 6.2.52 AND perform Subsection 6.7.

_____ 6.2.51 Verify or place 1-CH-P-1B in PTL.

6.2.52 Verify racked in or rack in Breaker 15J5, 1-CH-P-1B, CHARGING PUMP, to the CONNECT position IAW the following substeps.

N/A ____ IV

a. Verify that the ground straps for Breaker 15J5 have been removed.

____ IV

b. Verify that the charging spring motor toggle switch for Breaker 15J5 is ON.

____ IV

c. Rack Breaker 15J5, 1-CH-P-1B, to CONNECT.

6.3 Placing 1-CH-P-1A in Service and Stopping 1-CH-P-1B

6.3.1 Verify that the following isolation valves are open.

N/A _____ IV

a. 1-CH-MOV-1267A, CHG PUMP A SUCT NORM

_____ IV

b. 1-CH-MOV-1267B, CHG PUMP A SUCT ALT

_____ IV

c. 1-CH-MOV-1286A, CHG PUMP A DISCH NORM

_____ IV

d. 1-CH-MOV-1287A, CHG PUMP A DISCH ALT

_____ IV

e. 1-CH-MOV-1275A, CHG PUMP MINIFLOW RECIRC VALVES PUMP A

_____ IV

f. 1-CH-MOV-1373, CHG MINIFLOW RECIRC

_____

6.3.2 Verify proper gear box and motor oil levels. (Oil levels should be greater than $\frac{1}{4}$).

_____

6.3.3 IF the difference between RCS boron and Charging pump boron is greater than 360 ppm, OR it is desired to flush to further reduce boron differential, THEN initiate Attachment 8. Otherwise, enter N/A. **(Ref. 2.4.20)**

_____

6.3.4 Verify that Aux Lube Oil Pump Discharge Pressure is between 4 psig and 8 psig as indicated on 1-CH-PI-110A. Record Lube Oil Pressure. Submit a Condition Report if Lube Oil Pressure is greater than 8 psig.

Lube Oil Pressure_____ psig

NOTE: A Charging Pump may be started if oil flow can not be verified to bearing(s). Contingency actions for monitoring bearing temperature are in place as a compensatory measure if pump will be started without oil flow to bearing(s).

N/A

6.3.5 Verify oil flow to the pump bearings. Enter N/A if flow can not be verified to bearing(s).

_____ 6.3.6 Record Lube Oil Temperature from 1-CH-TI-110A. Submit a Condition Report if Lube Oil Temperature is less than 60°F or greater than 120°F.

Lube Oil Temperature _____ °F

_____ 6.3.7 Verify that the Auxiliary Building Operator has determined that 1-CH-P-1A is ready to start and that all personnel are clear of the shaft.

CAUTION

Simultaneous operation of two Charging Pumps below 350°F shall be limited to the time required to swap from one Charging Pump to another. **(Reference 2.4.2)**

If pump bearing oil flow can NOT be verified, bearing temperature must be monitored closely upon pump start. If temperature rise greater than 30°F is observed during first minute of pump operation, the pump must be secured immediately.

_____ 6.3.8 Start 1-CH-P-1A.

_____ 6.3.9 Verify Chg Pump AMPS stabilize between 50 amps and 65 amps.

6.3.10 IF pump started with no bearing oil flow observed prior to start, THEN do the following. Otherwise, enter N/A.

_____ a. Immediately after pump start, have Aux Building operator verify oil flow.

_____ b. IF no oil flow observed, THEN immediately secure pump.

_____ 6.3.11 Stop 1-CH-P-1B (if < 350°F and 450 psig, then place the Control Switch in PTL).

N/A

6.3.12 Monitor 1-CH-P-1A bearing temperatures on the PCS computer.

6.3.13 IF either of the following temperature limits is exceeded when the Charging Pump is operating, THEN the pump should be monitored for degradation as soon as possible by performance of 1-OPT-CH-001, Charging Pump Operability and Performance Test for 1-CH-P-1A.

- Oil Cooler outlet oil temperature - 160°F
- Charging Pump bearing temperature - 180°F

6.3.14 Verify that 1-VS-MOD-101A, Charging Pump Ventilation Suction Motor Operated Damper, is open.

6.3.15 Check that the Aux Lube Oil Pump is stopped.

6.3.16 Verify that Lube Oil Pump Discharge Pressure is between 8 psig and 25 psig as indicated on 1-CH-PI-110A. Record Lube Oil Pressure.

Lube Oil Pressure _____ psig

6.3.17 WHEN Charging Pump Lube Oil temperatures have stabilized, THEN verify that the TCV is controlling Lube Oil temperature between 100°F and 120°F. **(Reference 2.4.3)**

6.3.18 Verify that the Aux Lube Oil Pump for 1-CH-P-1B is running with a Lube Oil Pump Discharge Pressure between 4 psig and 8 psig. Record Lube Oil Pressure. Submit a Condition Report if Lube Oil Pressure is greater than 8 psig.

Lube Oil Pressure _____ psig (1-CH-PI-110B)

6.3.19 Check that 1-VS-MOD-101B, 1-CH-P-1B Charging Pump Ventilation Suction Motor Operated Damper, is closed.

6.4 Placing 1-CH-P-1C NORM FEED in Service and Stopping 1-CH-P-1B

N/A

6.4.1 Verify that the following isolation valves are open.

IV a. 1-CH-MOV-1270A, CHG PUMP C SUCT NORM

IV b. 1-CH-MOV-1270B, CHG PUMP C SUCT ALT

IV c. 1-CH-MOV-1286C, CHG PUMP C DISCH NORM

IV d. 1-CH-MOV-1287C, CHG PUMP C DISCH ALT

IV e. 1-CH-MOV-1275C, CHG PUMP MINIFLOW RECIRC VALVES PUMP C

IV f. 1-CH-MOV-1373, CHG MINIFLOW RECIRC

6.4.2 Verify proper gear box and motor oil levels. (Oil levels should be greater than $\frac{1}{4}$).

6.4.3 IF the difference between RCS boron and Charging pump boron is greater than 360 ppm, OR it is desired to flush to further reduce boron differential, THEN initiate Attachment 8. Otherwise, enter N/A. **(Ref. 2.4.20)**

6.4.4 Verify that Aux Lube Oil Pump Discharge Pressure is between 4 psig and 8 psig as indicated on 1-CH-PI-110C. Record Lube Oil Pressure. Submit a Condition Report if Lube Oil Pressure is greater than 8 psig.

Lube Oil Pressure _____ psig (1-CH-PI-110C)

NOTE: A Charging Pump may be started if oil flow can not be verified to bearing(s). Contingency actions for monitoring bearing temperature are in place as a compensatory measure if pump will be started without oil flow to bearing(s).

N/A 6.4.5 Verify oil flow to the pump bearings. Enter N/A if flow can not be verified to bearing(s).

6.4.6 Record Lube Oil Temperature from 1-CH-TI-110C. Submit a Condition Report if Lube Oil Temperature is less than 60°F or greater than 120°F.

Lube Oil Temperature _____ °F

6.4.7 Verify that the Auxiliary Building Operator has determined that Charging Pump C is ready to start and that all personnel are clear of the shaft.

CAUTION

Simultaneous operation of two Charging Pumps below 350°F shall be limited to the time required to swap from one Charging Pump to another. **(Reference 2.4.2)**

If pump bearing oil flow can NOT be verified, bearing temperature must be monitored closely upon pump start. If temperature rise greater than 30°F is observed during first minute of pump operation, the pump must be secured immediately.

6.4.8 Start 1-CH-P-1C.

6.4.9 Verify Chg Pump AMPS stabilize between 50 amps and 65 amps.

6.4.10 IF pump started with no bearing oil flow observed prior to start, THEN do the following. Otherwise, enter N/A.

a. Immediately after pump start, have Aux Building operator verify oil flow.

b. IF no oil flow observed, THEN immediately secure pump.

6.4.11 Stop 1-CH-P-1B (if < 350°F and 450 psig, then place the Control Switch in PTL).

N/A

6.4.12 Monitor Charging Pump C bearing temperatures on the PCS computer.

6.4.13 IF either of the following temperature limits is exceeded when the Charging Pump is operating, THEN the pump should be monitored for degradation as soon as possible by performance of 1-OPT-CH-003, Charging Pump Operability and Performance Test for 1-CH-P-1C.

- Oil Cooler outlet oil temperature - 160°F
- Charging Pump bearing temperature - 180°F

6.4.14 Verify that 1-VS-MOD-101C, Charging Pump Ventilation Suction Motor Operated Damper, is open.

6.4.15 Check that the Aux Lube Oil Pump is stopped.

6.4.16 Verify that Lube Oil Pump discharge pressure is between 8 psig and 25 psig as indicated on 1-CH-PI-110C. Record Lube Oil Pressure.

Lube Oil Pressure _____ psig

6.4.17 WHEN Charging Pump Lube Oil temperatures have stabilized, THEN verify that the TCV is controlling Lube Oil temperature between 100°F and 120°F. **(Reference 2.4.3)**

6.4.18 Verify that the Aux Lube Oil Pump for 1-CH-P-1B is running with a Lube Oil Pump Discharge Pressure between 4 psig and 8 psig. Record Lube Oil Pressure. Submit a Condition Report if Lube Oil Pressure is greater than 8 psig.

Lube Oil Pressure _____ psig (1-CH-PI-110B)

6.4.19 Check that 1-VS-MOD-101B, 1-CH-P-1B Charging Pump Ventilation Suction Motor Operated Damper, is closed.

6.5 **Discharge Check Valve Close Test, MOV Timing, Lube Oil TCV Timing and Starting 1-CH-P-1B**

NOTE: Steps 6.5.1 through 6.5.4 may be performed simultaneously.

Ble 6.5.1 Test the charging pump discharge check valve, stroke time MOVs and Lube Oil TCV by performing the following. IF Check Valve testing, MOV stroke time testing and Lube Oil TCV stroke time testing do NOT have to be performed, THEN enter N/A for steps in this subsection.

NOTE: If individual MOV(s) being returned to service, Subsection 6.8 may be used, if desired.

Ble a. IF the Reactor is critical, THEN start a LCO clock IAW Tech Spec 3.2 and Tech Spec 3.3. Otherwise, enter N/A.

Ble b. Verify 1-CH-P-1B stopped and place pump in PTL.

c. Verify open the following isolation valves.

Ble 8 IV 1. 1-CH-MOV-1269A, CHG PUMP B SUCT NORM

Ble 8 IV 2. 1-CH-MOV-1269B, CHG PUMP B SUCT ALT

Ble 8 IV 3. 1-CH-MOV-1286B, CHG PUMP B DISCH NORM

Ble 8 IV 4. 1-CH-MOV-1287B, CHG PUMP B DISCH ALT

Ble 8 IV 5. 1-CH-MOV-1275B, CHG PUMP MINIFLOW RECIRC VALVE PUMP B

Ble 8 IV 6. 1-CH-MOV-1373, CHG MINIFLOW RECIRC

NOTE: Full stroke time is defined as the interval from initiation of the actuating signal (initiation of manual actuation of the control panel switch) to the end of the actuating cycle (final control panel light extinguished).

d. From the Control Room, close the following. Using Control Room indication, verify each valve travels from full open to full closed. Record time required for each valve to travel closed on Attachment 4.

BLe 1. 1-CH-MOV-1286B, CHG PUMP B DISCH NORM

BLe 2. 1-CH-MOV-1287B, CHG PUMP B DISCH ALT

BLe 3. 1-CH-MOV-1275B, CHG PUMP MINIFLOW RECIRC VALVE PUMP B

BLe 4. 1-CH-MOV-1269A, CHG PUMP B SUCT NORM (Valve exercise only. Do not record the stroke time on Attachment 4.)

NOTE: The Accu-cal plus precision test gauge saves power by turning off after 30 minutes. The gauge may need to be energized by holding the power button for 2 - 3 seconds.

The Accu-cal plus precision test gauge is the preferred instrument for use in Substeps 6.5.1.e and 6.5.1.f. If the Accu-cal plus precision test gauge is not available, the normal discharge pressure gauge is acceptable.

BLe e. Record discharge pressure of running Charging pump from Accu-cal plus precision test gauge or the normal discharge gauge on Attachment 1. (Remain at location until Substep 6.5.1.f)

f. From the Control Room, open the following. Using Control Room indication, verify each valve travels from full closed to full open. Record time required for each valve to travel open on Attachment 4.

BLe 1. Open 1-CH-MOV-1269A, CHG PUMP B SUCT NORM. (Valve exercise only. Do not record the stroke time on Attachment 4.)

BLe

2. Open 1-CH-MOV-1275B, CHG PUMP MINIFLOW RECIRC VALVE PUMP B.

BLe

3. Open 1-CH-MOV-1286B, CHG PUMP B DISCH NORM. WHEN 1-CH-MOV-1286B is opened, THEN verify the following parameters indicate no charging pump discharge check valve leakage. (✓)

   ✓ Record discharge pressure of running pump on Attachment 1 using the instrument used in Substep 6.5.1.e.

NOTE: The following are additional parameters to assist the System Engineer in determining the magnitude of check valve leakage, however the acceptance criteria is not based on these parameters.

   ✓ 1D-E5, CHRG PP TO REGEN HX HI-LO FLOW NOT LIT.

   ✓ 1D-F5, CHRG PP TO REGEN HX LO PRESS NOT LIT.

   ✓ CHG PUMP AMPS do not increase.

   ✓ IF PCS point F0128A, Charging Header Flow is being plotted on strip chart, THEN verify charging flow does not decrease.

BLe

4. Open 1-CH-MOV-1287B, CHG PUMP B DISCH ALT.

BLe

g. Calculate the Discharge Pressure Differential on Attachment 1. (If the differential is less than or equal to 7.5 psid, the close test for 1-CH-267, Charging Pump B Discharge Check Valve, is satisfactory, and 1-CH-265 backleakage is acceptable)

NOTE: For a Charging Pump which has just been shut down, the respective TCV will normally remain open or throttled until the oil temperature has been reduced below the operating range of 100°F to 120°F.

6.5.2 Evaluate status of 1-SW-TCV-108B and perform the corresponding actions. (✓) Enter N/A for actions not taken.

Status	Criteria	Actions	Initials
✓	1-SW-TCV-108B Closed	a) Continue with Step 6.5.3.	BLe
N/A	1-SW-TCV-108B not full closed	a) IF 1-CH-P-1B was recently shut down AND 1-SW-TCV-108B remains partially open, THEN wait until 1-SW-TCV-108B goes full closed AND continue with Step 6.5.3. b) IF 1-CH-P-1B was NOT recently shutdown, THEN adjust controller until 1-SW-TCV-108B closes AND continue with Step 6.5.3. c) IF 1-SW-TCV-108B can NOT be closed by adjusting controller, THEN write WO AND do NOT continue until 1-SW-TCV-108B is operational.	N/A BL

6.5.3 Stroke test 1-SW-TCV-108B by performing the following.

BLe a. Obtain the AirCet test fitting.

BLe b. Verify 1-CH-P-1B stopped.

BLe c. Close or verify closed the valve on the AirCet test fitting.

CAUTION

The test fitting must be connected at the proper disconnect fitting. If the AirCet test fitting is connected to the wrong disconnect, then the valve will close, however, the stroke time will be significantly longer. **(Reference 2.4.11)**

BLe d. Connect the AirCet test fitting to the quick disconnect fitting on the air supply tubing leading to 1-SW-TCV-108B actuator dome.

BLe e. Verify closed 1-SW-TCV-108B.

BLe f. Station an operator to track the stroke time of 1-SW-TCV-108B.

BLe g. Close 1-IA-1601, Chg Pump B 1-SW-TCV-108B Positioner IA Isol.

NOTE: Stroke time is defined as the time required for the valve local position indicator to travel to the opposite extreme. Stroke timing will start when stem starts to move.

BLe h. Quickly open the isolation valve on the AirCet test fitting and begin timing.

NOTE: The TCV is open at greater than or equal to 90.0%. (9/10 on position indicator)

BLe i. Verify 1-SW-TCV-108B opens, as indicated on the local position indicator. Record the stroke time and Test position on Attachment 4.

BLe j. Close the isolation valve on the AirCet test fitting.

BLe k. Remove the AirCet test fitting from 1-SW-TCV-108B.

BLe S IV l. Open 1-IA-1601.

BL

m. Verify 1-SW-TCV-108B strokes fully closed and record the As Left position on Attachment 4. IF 1-SW-TCV-108B does NOT fully close, THEN initiate a Condition Report to check the operation of the controller.

N/A

6.5.4 IF the controller for 1-SW-TCV-108B was adjusted in Step 6.5.2, THEN perform 1-IPM-SW-TCV-108B to adjust controller setpoint. Otherwise, enter N/A.

BL

6.5.5 Verify that the Charging Pump gearbox oil level is in the operating range.

6.5.6 Verify the following before starting 1-CH-P-1B.

N/A

a. IF the difference between RCS boron and Charging pump boron is greater than 360 ppm, OR it is desired to flush to further reduce boron differential, THEN initiate Attachment 8. Otherwise, enter N/A. **(Ref. 2.4.20)**

BL

b. Verify that 1-CH-PI-110B, Aux Lube Oil Pump Discharge Pressure, is between 4 psig and 8 psig. Submit a Condition Report if Lube Oil Pressure is greater than 8 psig.

BL

c. Verify that LO temperature is greater than 28°F and preferably in the normal operating band between 80°F and 120°F.

BL

d. Record Lube Oil Temperature from 1-CH-TI-110B. Submit a Condition Report if Lube Oil Temperature is less than 60°F or greater than 120°F.

Lube Oil Temperature 102 °F

BL

e. Verify that MOD-VS-101B, Charging Pump Ventilation Suction Damper, is closed by noting no significant airflow through the duct.

NOTE: If any of the following temperature limits are exceeded on the Charging Pump being tested, the pump should be immediately shutdown.

- Oil Cooler outlet oil temperature upper operating limit is 160°F.
- Oil Cooler outlet oil temperature lower operating limit is 28°F.
- The upper administrative limit for the Charging Pump bearings is 180°F.

N/A

6.5.7 IF only valve stroke timing is to be performed, THEN place 1-CH-P-1B in AUTO and enter N/A for the remaining steps in Subsection 6.5.

CAUTION

If pump bearing oil flow can NOT be verified, bearing temperature must be monitored closely upon pump start. If temperature rise greater than 30°F is observed during first minute of pump operation, the pump must be secured immediately.

NOTE: Performance of the next step may remove the unit from the LCO clock entered in Step 6.5.1.b.

BLC

6.5.8 Start 1-CH-P-1B.

BLC

6.5.9 Verify Chg Pump AMPS stabilize between 50 amps and 65 amps.

6.5.10 IF pump started with no bearing oil flow observed prior to start, THEN do the following. Otherwise, enter N/A.

BLC

a. Immediately after pump start, have Aux Building operator verify oil flow.

N/A

b. IF no oil flow observed, THEN immediately secure pump.

BLC

6.5.11 IF the RCS is greater than 350°F and 450 psig, THEN stop the operating pump (1-CH-P-1A or 1-CH-P-1C, NORM FEED) and place in AUTO. Otherwise, enter N/A.

N/A

6.5.12 IF the RCS is less than 350°F and 450 psig, THEN stop the operating pump (1-CH-P-1A or 1-CH-P-1C) and place in PTL. Otherwise, enter N/A.

NOTE: Subsection 6.9 should be performed as soon as possible after pump stop.

BLC

6.5.13 Initiate oil sampling IAW Subsection 6.9.

BLC

6.5.14 Monitor Charging Pump B bearing temperatures on the PCS computer.

BLC

6.5.15 Check that the Aux Lube Oil Pump is stopped.

[illegible]

6.5.16 Verify that Lube Oil Pump Discharge Pressure is between 8 psig and 35 psig as indicated on 1-CH-PI-110B. Record Lube Oil Pressure.

Lube Oil Pressure 17.5 psig

CAUTION

Oil temperatures MUST NOT be allowed to exceed 160°F.

Setpoint adjustments MUST NOT be made during a pump start.

N/A

6.5.17 Monitor oil pressure and temperature. IF it is anticipated that Lube Oil Pump Discharge Pressure will drop below 8 psig OR Lube Oil temperature will reach 160°F, THEN start the operable standby pump AND secure 1-CH-P-1B. Otherwise, enter N/A.

NOTE: During hot weather a TCV may be full open with temperature above 120°F.

BLC

6.5.18 WHEN Charging Pump Lube Oil temperatures have stabilized, THEN verify that the TCV is controlling Lube Oil temperature between 100°F and 120°F. **(Reference 2.4.3)**

N/A IF oil temperature is greater than 120°F, AND the TCV is full open, THEN submit a Condition Report and inform System Engineering.

N/A IF oil temperature is greater than 120°F, AND the TCV is not full open, THEN write a CR for I & C to adjust the setpoint.

N/A IF oil temperature is less than 100°F, THEN write a CR for I & C to adjust the setpoint.

BLC

6.5.19 Verify MOD-VS-101B is open by noting airflow through the duct. **(Reference 2.4.5)**

BLC

6.5.20 Verify the following pump and damper checks.

Pump	Aux LO Pump Running	Aux LO Pump Pressure (psig)	Ventilation Damper Closed	Initials
1-CH-P-1A	Yes	4 psig to 8 psig 7 psig	Closed	BLC
1-CH-P-1C	Yes	4 psig to 8 psig 5.25 psig	Closed	BLC

6.6 1-CH-P-1B Performance Test

NOTE: Charging flow may require manual adjustment to maintain Przr level at normal operating level.

BL 6.6.1 Verify Pressurizer level is at the desired Program band level AND stable.

NOTE: When Charging flow is adjusted, Pressurizer level may deviate from program level. RCS pressure should be closely monitored.

BL 6.6.2 Close 1-CH-MOV-1269B, CHG PUMP B SUCT ALT.

6.6.3 IF the RCS is less than 350°F and 450 psig, THEN adjust the total Charging Flow between 157 gpm to 173 gpm as follows. Otherwise, enter N/A.

N/A BL

a. Verify or place 1-CH-FC-1122C, CHG FLOW CNTRL, in MANUAL.

b. Using 1-CH-FC-1122C and 1-RH-HCV-1142, RHR LETDOWN FLOW, adjust the flow through the Charging Pump until 1-CH-FI-1182, 1-CH-P-1B Suction Flow, indicates between 157 gpm and 173 gpm.

BL 6.6.4 IF the RCS is greater than 350°F and 450 psig, THEN verify or place 1-CH-FC-1122C, CHG FLOW CNTRL, in AUTO. Otherwise, enter N/A.

CAUTION

Adjustment of charging flow will affect Przr level, letdown temperature, and letdown pressure. These parameters must be continuously monitored to prevent flashing in the letdown line, relief valve lifting, and excessive temperature changes to the letdown flowstream.

BLe 6.6.5 Record the following indications.

BLe • Przr Level 54.2 %

BLe • VCT Level 40.4 %

BLe • LTDN Relief Line Temperature (1-CH-TI-1141) 106 °F

BLe • Non-Regen Hx Temperature (1-CH-TI-1144) 101 °F

BLe • Letdown Line Pressure (1-CH-PI-1145) 362 psi

BLe 6.6.6 Record charging flow. (PCS Point F1CH003A)

85 gpm

BLe 6.6.7 Record suction flow. (1-CH-FI-1182 from local indicator) 167 gpm
If suction flow is oscillating excessively, vent 1-CH-FT-1182 IAW Attachment 6.

NOTE

- Pump performance test takes approximately 20 minutes. Przr Level Program band should be maintained.
- In order to remain within the Przr level program band of +/- 5% for the duration of the test, adjustment must not exceed 7 gpm. Inability to obtain the required target flowrate with a +/- 7 gpm adjustment does not affect pump operability.

BLe 6.6.8 Verify or place 1-CH-LC-1459G, PRZR LEVEL CNTRL, in Manual.

BLe 6.6.9 Verify or place 1-CH-FC-1122C, CHG FLOW CONTROL, in Manual.

6.6.10 Adjust total charging flow:

BLe

a. Adjust 1-CH-FC-1122C until 1-CH-FI-1182 indicates a target range of between 149.0 and 163.0.

N/A

b. IF required adjustment exceeds +/- 7 gpm of the flow recorded in Step 6.6.7, THEN adjust to not more than +/- 7 gpm AND note in Operator Comments, Subsection 7.3. Otherwise, enter N/A.

NOTE: 1-CH-P-1B must run for at least 2 minutes to stabilize parameters before recording data.

BLe

6.6.11 Record the following information on Attachment 1, 1-CH-P-1B Performance Test Data Sheet.

- VCT Level
- VCT Pressure
- RCP A Seal Flow (1-CH-FT-1130) (PCS Computer Point U0983)
- RCP B Seal Flow (1-CH-FT-1127) (PCS Computer Point U0982)
- RCP C Seal Flow (1-CH-FT-1124) (PCS Computer Point U0981)
- 1-CH-P-1B discharge pressure (1-CH-PI-1152)
- 1-CH-P-1B suction pressure (1-CH-PI-1188)
- 1-CH-P-1B Suction Flow (1-CH-FI-1182) from Local Indicator
- Charging Flow (1-CH-FT-1122) (PCS Computer point F1CH003A)

NOTE: Attachment 2 is to be used for plant conditions greater than 350°F and Attachment 3 for plant conditions less than 350°F.

BLe

6.6.12 Calculate the Pump Differential Pressure (ΔP) on Attachment 1 and record the calculated value on Attachment 2 or Attachment 3. (If the ΔP is in the acceptable range, the partially open test for 1-CH-267 is satisfactory.)

Ble

6.6.13 Check 1-CH-PI-110B, Lube Oil Pump Discharge Pressure, and record Lube Oil Pressure on Attachment 1. (Reference pressure range is 8 psig to 35 psig.)

NOTE: Points measured but not recorded on Attachment 2 or Attachment 3 will be used by the Predictive Analysis Group.

NOTE: The specified flow rate must be maintained while suction pressure, discharge pressure, and vibration points 19 through 24 are recorded. Flow adjustments may be made after these data points are collected.

Ble

6.6.14 Using the Microlog Data Collector, measure the bearing vibration of the pump, driver, and speed increaser at points 1 through 24 of Attachment 2 or Attachment 3. Record the measured data for points 19 through 24 on Attachment 2 or Attachment 3.

Ble

6.6.15 Calculate the Charging Pump Miniflow Recirc flow rate on Attachment 1 and record the calculated value on Attachment 2 or Attachment 3. (If the flow rate is in acceptable range, the open test for 1-CH-265, Charging Pump Mini-flow Check Valve, and 1-CH-230, VCT Supply Discharge Check Valve, is satisfactory.)

Ble

6.6.16 Call up the 1-CH-P-1B Inboard, Outboard, and Thrust Bearing temperatures on the PCS Computer and record on Attachment 1.

N/A

6.6.17 IF any bearing temperature is above 170°F, THEN notify System Engineering within 24 hours AND record name of person notified on Attachment 1. Monitor bearing temperature closely while the pump is operating. IF bearing temperatures are below 170°F, THEN enter N/A.

N/A

6.6.18 IF the RCS is less than 350°F and 450 psig, THEN, using 1-CH-FC-1122C and 1-RH-HCV-1142, return the RHR Letdown Flow to a value specified by Shift Supervision. Otherwise, enter N/A.

Bb

6.6.19 IF the RCS is greater than 350°F and 450 psig, THEN, using 1-CH-FC-1122C, adjust charging flow AND establish Przr level to within Program band. Otherwise, enter N/A.

BK 6.6.20 Place 1-CH-LC-1459G in Auto.

BK 6.6.21 WHEN Przr level is at the desired level AND stable, THEN place 1-CH-FC-1122C in Auto.

6.6.22 Record the following indications. Enter N/A if RCS is less than 350°F and 450 psig.

BK • Przr Level 53.2 %

BK • VCT Level 43 %

BK • LTDN Relief Line Temperature (1-CH-TI-1141) 106 °F

BK • Non-Regen Hx Temperature (1-CH-TI-1144) 102 °F

BK • Letdown Line Pressure (1-CH-PI-1145) 310 psi

BK 6.6.23 Open 1-CH-MOV-1269B.

BK 6.6.24 Verify that 1-CH-P-1B operating parameters are normal.

BK 6.6.25 Inspect all piping outlined on Attachment 5. Collect any leakage found for a two minute period and record the leak location and the quantity collected on Attachment 1, 1-CH-P-1B Performance Test Data Sheet, (20 drops = 1 cc).

N/A 6.6.26 Record Condition Report number on Attachment 1 for each leak found. Otherwise, enter N/A.

6.7 1-CH-P-1B Return to Service with 1-CH-P-1C, ALT FEED, in Service

6.7.1 Verify that the following isolation valves are open.

N/A IV

a. 1-CH-MOV-1267A, CHG PUMP A SUCT NORM

IV

b. 1-CH-MOV-1267B, CHG PUMP A SUCT ALT

IV

c. 1-CH-MOV-1286A, CHG PUMP A DISCH NORM

IV

d. 1-CH-MOV-1287A, CHG PUMP A DISCH ALT

IV

e. 1-CH-MOV-1275A, CHG PUMP MINIFLOW RECIRC VALVES PUMP A

IV

f. 1-CH-MOV-1373, CHG MINIFLOW RECIRC

6.7.2 Verify that Aux Lube Oil Pump Discharge Pressure is between 4 psig and 8 psig as indicated on 1-CH-PI-110A. Record Lube Oil Pressure. Submit a Condition Report if Lube Oil Pressure is greater than 8 psig.

Lube Oil Pressure _____ psig

NOTE: A Charging Pump may be started if oil flow can not be verified to bearing(s). Contingency actions for monitoring bearing temperature are in place as a compensatory measure if pump will be started without oil flow to bearing(s).

6.7.3 Verify oil flow to the pump bearings. Enter N/A if flow can not be verified to bearing(s).

N/A

6.7.4 IF the difference between RCS boron and Charging pump boron is greater than 360 ppm, OR it is desired to flush to further reduce boron differential, THEN initiate Attachment 8. Otherwise, enter N/A. **(Ref. 2.4.20)**

6.7.5 Record Lube Oil Temperature from 1-CH-TI-110A. Submit a Condition Report if Lube Oil Temperature is less than 60°F or greater than 120°F.

Lube Oil Temperature _____ °F

6.7.6 Verify that the Auxiliary Building Operator has determined that 1-CH-P-1A is ready to start and that all personnel are clear of the shaft.

CAUTION

Simultaneous operation of two Charging Pumps below 350°F shall be limited to the time required to swap from one Charging Pump to another. **(Reference 2.4.2)**

If pump bearing oil flow can NOT be verified, bearing temperature must be monitored closely upon pump start. If temperature rise greater than 30°F is observed during first minute of pump operation, the pump must be secured immediately.

6.7.7 Start 1-CH-P-1A.

6.7.8 Verify Chg Pump AMPS stabilize between 50 amps and 65 amps.

6.7.9 IF pump started with no bearing oil flow observed prior to start, THEN do the following. Otherwise, enter N/A.

a. Immediately after pump start, have Aux Building operator verify oil flow.

b. IF no oil flow observed, THEN immediately secure pump.

NOTE: If the Reactor is Critical, the performance of the following substep will result in the entry into a Tech Spec LCO clock due to operating with less than the minimum number of operable Charging Pumps.

6.7.10 Place 1-CH-P-1C ALT FEED in PTL.

N/A

6.7.11 Monitor Charging Pump A bearing temperatures on the PCS computer.

6.7.12 IF either of the following temperature limits is exceeded when the Charging Pump is operating, THEN the pump should be monitored for degradation as soon as possible by performance of 1-OPT-CH-001, Charging Pump Operability and Performance Test for 1-CH-P-1A.

- Oil Cooler outlet oil temperature - 160°F
- Charging Pump bearing temperature - 180°F

6.7.13 Verify that 1-VS-MOD-101A, Charging Pump Ventilation Suction Motor Operated Damper, is open.

6.7.14 Check that the Aux Lube Oil Pump is stopped.

6.7.15 Verify that Lube Oil Pump Discharge Pressure is between 8 psig and 25 psig as indicated on 1-CH-PI-110A. Record Lube Oil Pressure.

Lube Oil Pressure _____ psig

6.7.16 WHEN Charging Pump Lube Oil temperatures have stabilized, THEN verify that the TCV is controlling Lube Oil temperature between 100°F and 120°F.

6.7.17 Verify that the Aux Lube Oil Pump for 1-CH-P-1C is running with a Lube Oil Pump Discharge Pressure between 4 psig and 8 psig. Record Lube Oil Pressure. Submit a Condition Report if Lube Oil Pressure is greater than 8 psig.

Lube Oil Pressure _____ psig (1-CH-PI-110C)

6.7.18 Check that 1-VS-MOD-101C, 1-CH-P-1C Charging Pump Ventilation Suction Motor Operated Damper, is closed.

6.7.19 Verify or place the following Charging Pumps in PTL.

a. 1-CH-P-1B, CHARGING PUMP B

b. 1-CH-P-1C, CHARGING PUMP C NORM FEED

6.7.20 Rack Breaker 15J2, 1-CH-P-1C, CHARGING PUMP C ALT FEED, to DISCONNECT IAW the following substeps. IF breaker is in DISCONNECT, THEN enter N/A.

N/A IV

a. Verify that the mechanical position indicator for Breaker 15J2 indicates OPEN with a green flag.

IV

b. Rack Breaker 15J2, 1-CH-P-1C, CHARGING PUMP C ALT FEED, to DISCONNECT.

6.7.21 Rack in Breaker 15J5, 1-CH-P-1B to CONNECT IAW the following substeps.

IV

a. Verify that the ground straps for Breaker 15J5 have been removed.

IV

b. Verify the charging spring motor toggle switch for Breaker 15J5 is ON.

IV

c. Rack Breaker 15J5, 1-CH-P-1B to CONNECT.

6.7.22 Verify that the following isolation valves are open.

IV

a. 1-CH-MOV-1269A, CHG PUMP B SUCT NORM

IV

b. 1-CH-MOV-1269B, CHG PUMP B SUCT ALT

IV

c. 1-CH-MOV-1286B, CHG PUMP B DISCH NORM

IV

d. 1-CH-MOV-1287B, CHG PUMP B DISCH ALT

N/A _____ IV

e. 1-CH-MOV-1275B, CHG PUMP MINIFLOW RECIRC VALVE PUMP B

_____ IV

f. 1-CH-MOV-1373, CHG MINIFLOW RECIRC

_____

6.7.23 Verify that Aux Lube Oil Pump Discharge Pressure for 1-CH-P-1B is between 4 psig and 8 psig as indicated on 1-CH-PI-110B. Record Lube Oil Pressure. Submit a Condition Report if Lube Oil Pressure is greater than 8 psig.

Lube Oil Pressure _____ psig

NOTE: A Charging Pump may be started if oil flow can not be verified to bearing(s). Contingency actions for monitoring bearing temperature are in place as a compensatory measure if pump will be started without oil flow to bearing(s).

_____

6.7.24 Verify oil flow to the pump bearings. Enter N/A if flow can not be verified to bearing(s).

_____

6.7.25 Record Lube Oil Temperature from 1-CH-TI-110B. Submit a Condition Report if Lube Oil Temperature is less than 60°F or greater than 120°F.

Lube Oil Temperature _____ °F

CAUTION

Racking in Breaker 1H 15H6 (1-CH-P-1C NORM FEED) will trip/lockout Breaker 1J 15J2 (1-CH-P-1C ALT FEED).

6.7.26 Rack Breaker 15H6, 1-CH-P-1C, NORM FEED, to CONNECT IAW the following substeps. IF 1-CH-P-1C NORM FEED is to remain in PTL, THEN enter N/A for the remaining steps in Subsection 6.7.

_____ IV

a. Verify that the ground straps for Breaker 15H6 have been removed.

N/A IV

b. Verify that the charging spring motor toggle switch for Breaker 15H6 is ON.

IV

c. Rack Breaker 15H6, 1-CH-P-1C, NORM FEED, to CONNECT.

6.7.27 Place 1-CH-P-1C, NORM FEED, in AUTO. IF 1-CH-P-1C, NORM FEED, is to be racked in and left in PTL, THEN enter N/A.

6.7.28 GO TO Subsection 6.5.

6.8 Testing of Charging Pump MOVs

NOTE: This section allows testing of MOVs individually following Maintenance. If return to service testing of a Charging Pump is required, refer to Step 6.1.5 for required actions.

N/A

6.8.1 Verify all Maintenance has been completed on MOV(s) being tested.

6.8.2 Notify Maintenance Personnel if required.

NOTE: Full stroke time is defined as the interval from initiation of the actuating signal (initiation of manual actuation of the control panel switch) to the end of the actuating cycle (final control panel light extinguished).

6.8.3 From the Control Room, close the following MOV(s). Using Control Room indication, verify each valve travels from full open to full closed. Record time required for each valve to travel closed on Attachment 4. Enter N/A for valve(s) not being stroked.

a. 1-CH-MOV-1286B, CHG PUMP B DISCH NORM

b. 1-CH-MOV-1287B, CHG PUMP B DISCH ALT

c. 1-CH-MOV-1275B, CHG PUMP MINIFLOW RECIRC VALVE PUMP B

d. 1-CH-MOV-1269A, CHG PUMP B SUCT NORM
(Valve exercise only. Do not record stroke time on Attachment 4.)

6.8.4 From the Control Room, open the following MOV(s). Using Control Room indication, verify each valve travels from full closed to full open. Record time required for each valve to travel open on Attachment 4. Enter N/A for valve(s) not being stroked.

N/AAL

a. 1-CH-MOV-1286B, CHG PUMP B DISCH NORM

b. 1-CH-MOV-1287B, CHG PUMP B DISCH ALT

c. 1-CH-MOV-1275B, CHG PUMP MINIFLOW RECIRC VALVES PUMP

d. 1-CH-MOV-1269A, CHG PUMP B SUCT NORM
(Valve exercise only. Do not record stroke time on Attachment 4.)

6.8.5 Continue with pump / valve maintenance or return to service, whichever applies.

6.9 Obtaining Oil Samples

NOTE: This procedure may continue while oil samples are taken.

NOTE: Oil samples should be taken as soon as possible after stopping pump, but may be delayed per SRO until 1-CH-P-1B is returned to service.

6.9.1 Obtain oil samples for 1-CH-P-1A IAW the following steps. Enter N/A if sampling 1-CH-P-1C.

BLE a. Review T.S Section 3.2. B, Charging Pump Operability, and T.S. Section 3.3.A, Safety Injection System Operability, to determine if any actions are required before placing 1-CH-P-1A in PTL.

BLE b. Enter any required T.S. clock for placing 1-CH-P-1A in PTL.

BLE c. Place 1-CH-P-1A in PTL.

d. Obtain reservoir oil sample IAW the following steps:

SL 1. Verify auxiliary oil pump running.

SL 2. Remove downstream pipe cap from 1-CH-495, CHG Pump A LO Sample Isol.

3. Perform the following steps.

SL • Open 1-CH-495 and drain approximately 500 mls to clean container.

SL • Obtain reservoir oil sample of 120 mls (completely fill bottle).

SL • Close 1-CH-495.

SL 4. Replace downstream pipe cap at 1-CH-495.

SL 5. Remove the speed increaser fill cap <u>AND</u> carefully pour the 500 mls flush sample into the speed increaser.

SL 6. Check the oil reservoir level and replenish as necessary.

SL 7. Replace speed increaser fill cap.

e. Obtain motor inboard bearing oil sample IAW the following steps:

SL 1. Remove the inboard bearing chicken feeder.

SL 2. Remove the inboard bearing drain valve cap.

SL 3. Open inboard bearing drain valve AND obtain one inboard bearing oil sample of 120 mls (completely fill bottle).

SL 4. Close inboard bearing drain valve.

SL 5. Replace inboard bearing drain valve cap.

SL 6. Add 120 mls of the approved oil through the chicken feeder base.

SL 7. Replace the inboard bearing chicken feeder.

f. Obtain motor outboard bearing oil sample IAW the following steps:

SL 1. Remove the outboard bearing chicken feeder.

SL 2. Remove the outboard bearing drain valve cap.

SL 3. Open outboard bearing drain valve AND obtain one outboard bearing oil sample of 120 mls (completely fill bottle).

SL 4. Close outboard bearing drain valve.

SL 5. Replace outboard bearing drain valve cap.

SL 6. Add 120 mls of the approved oil through the chicken feeder base.

SL 7. Replace the outboard bearing chicken feeder.

IV

g. Place 1-CH-P-1A in AUTO.

h. Exit any clock entered in Step 6.9.1.b.

i. Label the oil samples with the following information.

- Equipment Location
- Name of sample
- Date and time of sample
- Name and initials of person taking sample

j. Deliver the oil samples to Count Room window and notify PAG to pick them up.

6.9.2 Obtain oil samples for 1-CH-P-1C IAW the following steps. Enter N/A if sampling 1-CH-P-1A.

N/A

a. Review T.S Section 3.2. B, Charging Pump Operability, and T.S. Section 3.3.A, Safety Injection System Operability, to determine if any actions are required before placing 1-CH-P-1C in PTL.

b. Enter any required T.S. clock for placing 1-CH-P-1C in PTL.

c. Place 1-CH-P-1C in PTL.

d. Obtain reservoir oil sample IAW the following steps:

1. Verify auxiliary oil pump running.

2. Remove downstream pipe cap from 1-CH-497, CHG Pump C LO Sample Isol.

3. Perform the following steps.

- Open 1-CH-497 and drain approximately 500 mls to clean container.

N/A

- Obtain reservoir oil sample of 120 mls. (completely fill bottle)
- Close 1-CH-497.

4. Replace downstream pipe cap at 1-CH-497.
5. Remove the speed increaser fill cap AND carefully pour the 500 mls flush sample into the speed increaser.
6. Check the oil reservoir level and replenish as necessary.
7. Replace speed increaser fill cap.

e. Obtain motor inboard bearing oil sample IAW the following steps:

1. Remove the inboard bearing chicken feeder.
2. Remove the inboard bearing drain valve cap.
3. Open inboard bearing drain valve AND obtain one inboard bearing oil sample of 120 mls. (completely fill bottle)
4. Close inboard bearing drain valve.
5. Replace inboard bearing drain valve cap.
6. Add 120 mls of the approved oil through the chicken feeder base.
7. Replace the inboard bearing chicken feeder.

f. Obtain motor outboard bearing oil sample IAW the following steps:

1. Remove the outboard bearing chicken feeder.
2. Remove the outboard bearing drain valve cap.
3. Open outboard bearing drain valve AND obtain one outboard bearing oil sample of 120 mls. (completely fill bottle)

N/A

IV

4. Close outboard bearing drain valve.

5. Replace outboard bearing drain valve cap.

6. Add 120 mls of the approved oil through the chicken feeder base.

7. Replace the outboard bearing chicken feeder.

g. Place 1-CH-P-1C in AUTO.

h. Exit any clock entered in Step 6.9.2.b.

i. Label the oil samples with the following information.

- Equipment Location
- Name of sample
- Date and time of sample
- Name and initials of person taking sample

j. Deliver the oil samples to Count Room window and notify PAG to pick them up.

6.10 Discharge Check Valve Backleakage Test on Non-running Charging Pump

NOTE:
- This Subsection is not required during the normal quarterly Charging Pump run. This Subsection is to be used as required for increased monitoring of a suspected leaking discharge check valve.
- The performance of this Subsection will result in the entry into a Tech Spec LCO due to operating with less than the minimum number of operable Charging Pumps.
- The Accu-cal plus precision test gauge is the preferred instrument for use in this Subsection. If the Accu-cal plus precision test gauge is not available, the normal discharge pressure gauge is acceptable.
- The Accu-cal plus precision test gauge saves power by turning off after 30 minutes. The gauge may need to be energized by holding the power button for 2 - 3 seconds.

NIA

6.10.1 Verify 1-CH-P-1B secured and place pump in PTL.

6.10.2 From the Control Room, close the following MOV(s).

a. 1-CH-MOV-1286B, CHG PUMP B DISCH NORM

b. 1-CH-MOV-1287B, CHG PUMP B DISCH ALT

c. 1-CH-MOV-1275B, CHG PUMP MINIFLOW RECIRC VALVE PUMP B

6.10.3 Record discharge pressure of running Charging pump from Accu-cal plus precision test gauge or the normal discharge gauge.

_____ psig

6.10.4 From the Control Room, open the following MOV(s).

a. 1-CH-MOV-1286B, CHG PUMP B DISCH NORM

b. 1-CH-MOV-1287B, CHG PUMP B DISCH ALT

N/A

c. 1-CH-MOV-1275B, CHG PUMP MINIFLOW RECIRC VALVE PUMP B

6.10.5 Record discharge pressure of running Charging pump from Accu-cal plus precision test gauge or the normal discharge gauge.

_____ psig

6.10.6 Place 1-CH-P-1B in Automatic and stop any clock previously started.

6.10.7 Calculate the discharge pressure differential. (Reference - less than or equal to 7.5 psid)

_____ - _____ = _____ psid
(Step 6.10.3) (Step 6.10.5)

7.0 FOLLOW-ON

7.1 Acceptance Criteria

7.1.1 Evaluate the test results by reviewing the Acceptance Criteria for the components tested. (✓) Enter N/A for components not tested.

- ✓ 1-CH-267, Charging Pump Discharge Check Valve, operated in the partially open direction as evidenced by an acceptable pump differential pressure. (Attachment 2 or Attachment 3 - Step 6.6.12)
- ✓ 1-CH-267, Charging Pump Discharge Check Valve, operated in the fully closed direction as evidenced by a discharge pressure differential for the running charging pump of less than or equal to 7.5 psid. (Attachment 1, Step 6.5.1.g, or Step 6.10.7)
- ✓ 1-CH-265, Charging Pump Miniflow Recirc Header Check Valve, operated in the open direction as evidenced by an acceptable recirculation flow rate. (Attachment 2 or Attachment 3 - Step 6.6.15)
- ✓ 1-CH-230, VCT Supply Discharge Check Valve, operated in the open direction as evidenced by an acceptable recirculation flow rate. (Attachment 2 or Attachment 3 - Step 6.6.15)
- ✓ Charging Pump ΔP and Vibration status determinations are not INOP. (Attachment 2 or Attachment 3)
- ✓ 1-CH-MOV-1286B, CHG PUMP B DISCH NORM, traveled full open and closed within the acceptable range. (Attachment 4)
- ✓ 1-CH-MOV-1287B, CHG PUMP B DISCH ALT, traveled full stroke open and closed within the acceptable range. (Attachment 4)
- ✓ 1-CH-MOV-1275B, CHG PUMP MINIFLOW RECIRC VALVE PUMP B, traveled full stroke open and closed within the acceptable range. (Attachment 4)

- ✓ 1-SW-TCV-108B recorded data is as follows. (Attachment 4) (✓)
  - ✓ Test position - OPEN
  - ✓ Stroke Time - Less than Maximum Time
- ✓ 1-SW-TCV-108B opens and controls charging pump lube oil temperature out of the cooler below 160°F.

BLC

7.1.2 Document the test results. (✓)

✓ Satisfactory ___ Unsatisfactory

7.2 **Follow-On Tasks**

7.2.1 IF the test was satisfactory, THEN enter N/A in the following substeps.
IF the test was unsatisfactory, THEN perform the following:

N/A

a. Notify Shift Supervision.

b. Initiate a Condition Report and record the CR Number.

CR No. _____

CR No. _____

c. Notify the IST and System Engineer of the unsatisfactory condition and record the names of the personnel notified.

_____ _____
IST Engineer Date

_____ _____
System Engineer Date

ME

7.2.2 Notify STA to compare new Total System External Leakage as determined by Attachment 1 to maximum allowed by 1-NPT-ZZ-001. IF leakage is greater than limit, THEN perform the following substeps. Otherwise, enter N/A.

N/A

a. Notify the System Engineer of the unsatisfactory condition and record the name of the person notified.

_____ _____
System Engineer Date

b. Initiate a Condition Report and record the CR Number.

CR No. _____

c. Start a 7-day administrative clock to decrease the SI external loop leakage to within satisfactory values. **(Reference 2.4.10)**

N/A

7.2.3 IF a partial operability test was performed, THEN document the reason for the partial test in Operator Comments, Subsection 7.3. IF a full test was performed, THEN enter N/A.

7.2.4 IF the test or partial test was satisfactory but in ALERT, THEN perform the following. IF there is no ALERT condition, THEN enter N/A.

N/A

a. Notify Shift Supervision.

b. Notify the IST and System Engineer of the ALERT condition and record the names of the personnel notified.

_____ _____
IST Engineer Date

_____ _____
System Engineer Date

BLL

7.2.5 Make or verify an entry in the M & TE Usage Log for each SQC device used during this test.

7.2.6 IF test flow could not be achieved, THEN perform the following.

N/A

a. Notify Shift Supervision.

b. Notify the IST Engineer and record name of person notified.

_____ _____
IST Engineer Date

c. Initiate a Condition Report and record CR number.
(Failure to achieve flow within range DOES NOT, by itself, make this test UNSAT).

Condition Report No. _____

7.2.7 IF charging pump discharge check valve backleakage recorded in Attachment 1 Step 6.5.1.g was greater than 2.5 psid, THEN perform the following. Otherwise, enter N/A.

N/A

a. Notify Shift Supervision.

b. Initiate a Condition Report and record the CR Number.

Condition Report No. _____

c. Notify the IST and System Engineer of the condition so that an increase in test frequency can be evaluated. Record the names of the personnel notified.

_____ _____
IST Engineer Date

_____ _____
System Engineer Date

BLL

7.2.8 IF Accu-cal plus precision test gauge was installed by I&C in Step 6.1.2, THEN have I&C remove gauge IAW Attachment 9. Otherwise, enter N/A.

7.3 Notification, Documentation, and Procedure Closeout

BQ

7.3.1 Notify Shift Supervision that the test is complete.

The Initials in this procedure will be identified by the Printed Name.

Initials	Printed Name
SL	Sean Locascio
S	Skip Irwin
BQ	Bonnie Jurewicz
W	Dave Wilson

Operator Comments: _____

Completed by: Bonnie Jurewicz Date: Today

Time: Now

7.4 **Review**

Comments: _____

_____

_____

_____

_____

_____

Reviewed by: _____ Date: _____
Shift Supervision

Forward original procedure to Engineering Testing.

_____ IST Eng

7.4.1 Make PVIST Data entry. **(Ref. 2.4.21)**

_____ Sys Eng

7.4.2 Verify PVIST Data entry. **(Ref. 2.4.21)**

Comments: _____

_____

_____

_____

Reviewed by: _____ Date: _____
IST Engineer

Comments: _____

_____

_____

_____

1-NPT-ZZ-001 Updated _____ Yes _____ No _____ N/A

Reviewed by: _____ Date: _____
System Engineer

(Page 1 of 4)

Attachment 1

1-CH-P-1B PERFORMANCE TEST DATA SHEET

NOTE: Work Order recording steps may be entered N/A if Work Order Tracking Sheet attached to completed procedure.

Step 6.1.1

WO No.: _____ Equipment Location: _____

WO No.: _____ Equipment Location: _____

WO No.: _____ Equipment Location: _____

Step 6.1.3

	Reference SQC Number	Cal Due Date
Accu-Cal Plus precision gauge (if used))	7423	9-7-10

	SQC Number	Cal Due Date
Vibration detector	5016B	2-6-11
Stopwatch	3698	9-26-10
Stopwatch	3704	4-2-11
Stopwatch	3706	4-2-11

Step 6.1.4

✓ RCS at normal operating pressure OR ____ RHR in Service (✓ one.)

(Page 2 of 4)

Attachment 1

1-CH-P-1B PERFORMANCE TEST DATA SHEET

Step 6.5.1.e Discharge Pressure (Accu-cal plus gauge, 1-CH-PI-1151 or 1-CH-PI-1153) 2496.7 psig

Step 6.5.1.f Discharge Pressure (Accu-cal plus gauge, 1-CH-PI-1151 or 1-CH-PI-1153) 2495.2 psig

Step 6.5.1.g Discharge Pressure differential (Reference - less than or equal to 7.5 psid)

2496.7 (Step 6.5.1.e) – 2495.2 (Step 6.5.1.f) = 1.5 psid

Step 6.6.11 VCT Level 43.3%

VCT Pressure 28 psig

Discharge Pressure (1-CH-PI-1152) 2600 psig

Suction Pressure (1-CH-PI-1188) 31.8 psig

Suction Flow (1-CH-FI-1182) 162 gpm (from local indicator)

Charging Flow (1-CH-FT-1122) 79 gpm (PCS Computer Pt F1CH003A)

RCP A Seal Flow (1-CH-FT-1130) 7.6 gpm (PCS Computer Pt U0983)

RCP B Seal Flow (1-CH-FT-1127) 7.6 gpm (PCS Computer Pt U0982)

RCP C Seal Flow (1-CH-FT-1124) 7.5 gpm (PCS Computer Pt U0981)

(Page 3 of 4)

Attachment 1

1-CH-P-1B PERFORMANCE TEST DATA SHEET

Step 6.6.12 Pump Differential Pressure

2600 - 31.8 = 2568.2 psid

(1-CH-PI-1152) (1-CH-PI-1188)

Step 6.6.13 Lube Oil Pressure 18 psig

Step 6.6.15 Mini-flow Recirculation Flow Rate

162 - 7.6 - 7.6 - 7.5 - 79 = 60.3 gpm

FI-1182 FT-1130 FT-1127 FT-1124 FT-1122

Step 6.6.16
- Inboard Bearing ID Point T0116A 128.6 °F (Reference 120°F)
- Outboard Bearing ID Point T0117A 132.5 °F (Reference 130°F)
- Thrust Bearing ID Point T0118A 111.0 °F (Reference 130°F)

Step 6.6.17 Name of System Engineer Notified N/A

(Page 4 of 4)

Attachment 1

1-CH-P-1B PERFORMANCE TEST DATA SHEET

Step 6.6.25 Record locations of any leakage found.

N/Ade - None

Step 6.6.26 Condition Report numbers

N/Ade - None

Performed by: Bonnie Jurica (Signature) BG (Initial) Bonnie Jurica (Print) Today (Date)

(Page 1 of 1)

Attachment 2

1-CH-P-1B VIBRATION, FLOW AND ΔP DATA TABLE (> 350°F)

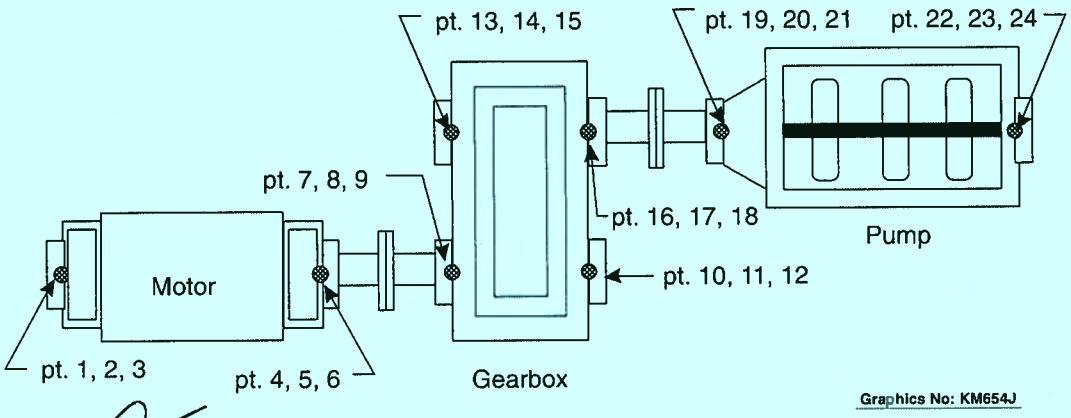

NOTE: ● Represents the Horizontal, Vertical, and Axial Accelerometer Pads Mounted on the Bearing Housing and Indicated in Yellow on the Pump/Driver Assembly.

VIBRATION TESTING POINTS

Parameters in ALERT range are considered SATISFACTORY. Parameters in INOP are UNSATISFACTORY.

PARAMETER	REF VALUE	TEST VALUE	ACCEPT RANGE	ALERT RANGE	INOP RANGE	STATUS SAT, INOP ALERT
ΔP Step 6.6.12 (Ref. 2.3.30)	psid 2553	2568.2	2433 to 2731	NONE	< 2433 OR > 2731	SAT
Inboard Vibration Horizontal (pt 19) Vertical (pt 20) Axial (pt 21)	in/sec 0.1622 0.0981 0.0594	 .2673 .062 .0425	 ≤0.325 ≤0.245 ≤0.148	 >0.325 to ≤0.700 >0.245 to ≤0.588 >0.148 to ≤0.356	 > 0.700 > 0.588 > 0.356	SAT
Outboard Vibration Horizontal (pt 22) Vertical (pt 23) Axial (pt 24)	in/sec 0.2710 0.0942 0.0483	 .7162 .057 .0707	 ≤0.325 ≤0.235 ≤0.125	 >0.325 to ≤0.700 >0.235 to ≤0.565 >0.125 to ≤0.300	 > 0.700 > 0.565 > 0.300	SAT
Recirc Flow Rate Step 6.6.15	54 gpm	60.3	≥ 35 to ≤ 80 gpm	N/A	< 35 or > 80 gpm	SAT

(Page 1 of 1)

Attachment 3

1-CH-P-1B VIBRATION, FLOW AND ΔP DATA TABLE (< 350°F)

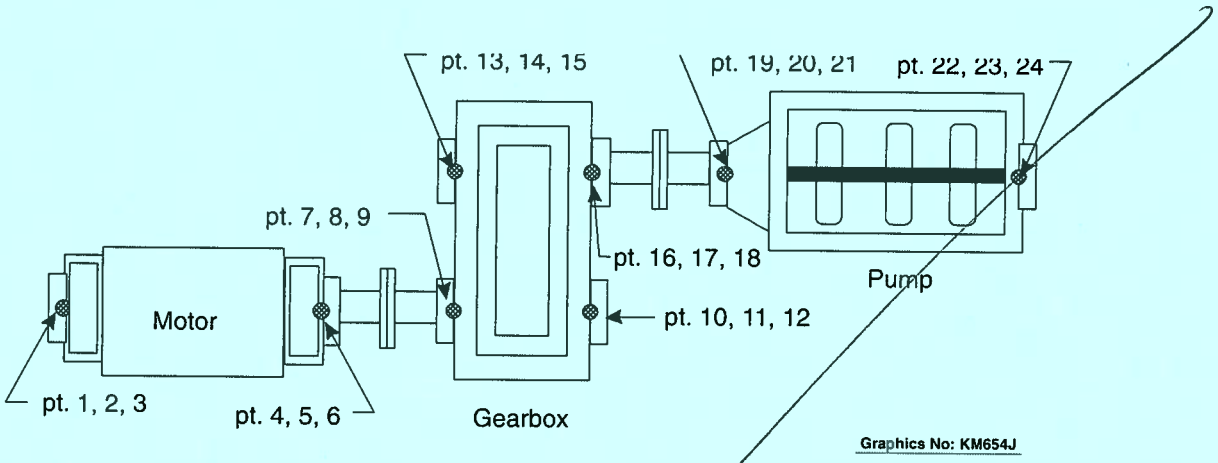

NOTE: ● Represents the Horizontal, Vertical, and Axial Accelerometer Pads Mounted on the Bearing Housing and Indicated in Yellow on the Pump/Driver Assembly.

VIBRATION TESTING POINTS

N/A

Parameters in ALERT range are considered SATISFACTORY. Parameters in INOP are UNSATISFACTORY.

PARAMETER	REF VALUE	TEST VALUE	ACCEPT RANGE	ALERT RANGE	INOP RANGE	STATUS SAT, INOP ALERT
Δ P Step 6.6.12 (Ref. 2.3.30)	psid 2416	____	2421 to 2585	NONE	< 2421 OR > 2585	____
Inboard Vibration Horizontal (pt 19) Vertical (pt 20) Axial (pt 21)	in/sec 0.1433 0.0758 0.0797	 ____ ____ ____	 ≤0.3250 ≤0.1895 ≤0.1992	 >0.3250 to ≤0.7000 >0.1895 to ≤0.4548 >0.1992 to ≤0.4782	 > 0.7000 > 0.4548 > 0.4782	____
Outboard Vibration Horizontal (pt 22) Vertical (pt 23) Axial (pt 24)	in/sec 0.1887 0.1001 0.1247	 ____ ____ ____	 ≤0.3250 ≤0.2500 ≤0.3117	 >0.325 to ≤0.7000 >0.2500 to ≤0.6001 >0.3117 to ≤0.7000	 > 0.7000 > 0.6001 > 0.7000	____
Recirc Flow Rate Step 6.6.15	53 gpm	____	≥ 35 to ≤ 80 gpm	N/A	< 35 or > 80 gpm	____

(Page 1 of 1)

Attachment 4
MOV STROKE TIME DATA TABLE

Stroke Test - Closed

Step	Valve	Stroke Position	Reference Time	Acceptable Range Time	Actual Time
6.5.1.d / 6.8.3.a	1-CH-MOV-1286B	Closed	10.9 sec	9.3 to 12.5 sec	10.2 Seconds
6.5.1.d / 6.8.3.b	1-CH-MOV-1287B	Closed	5.21 sec	4.0 to 6.5 sec	5.45 Seconds
6.5.1.d / 6.8.3.c	1-CH-MOV-1275B	Closed	8.8 sec	6.6 to 11.0 sec	8.49 Seconds

Stroke Test - Open

Step	Valve	Stroke Position	Reference Time	Acceptable Range Time	Actual Time
6.5.1.f / 6.8.4.a	1-CH-MOV-1286B	Open	9.8 sec	7.4 to 12.2 sec	9.24 Seconds
6.5.1.f / 6.8.4.b	1-CH-MOV-1287B	Open	5.05 sec	3.8 to 6.3 sec	6.78 Seconds
6.5.1.f / 6.8.4.c	1-CH-MOV-1275B	Open	9.0 sec	6.8 to 11.2 sec	8.59 Seconds

Subsection 6.5.3	Test Position (Step 6.5.3.i)	Stroke Time in Seconds (Step 6.5.3.i)	Reference Time	Maximum Time	As Left Position (Step 6.5.3.m)
1-SW-TCV-108B	open	6.1	3.7 sec	30.0 sec	closed

Performed by: Bonnie Jurewicz (Signature) BLe (Initial) Bonnie Jurewicz (Print) Today (Date)

(Page 1 of 1)

Attachment 5

CHARGING SYSTEM EXTERNAL LEAK INSPECTION DIAGRAM

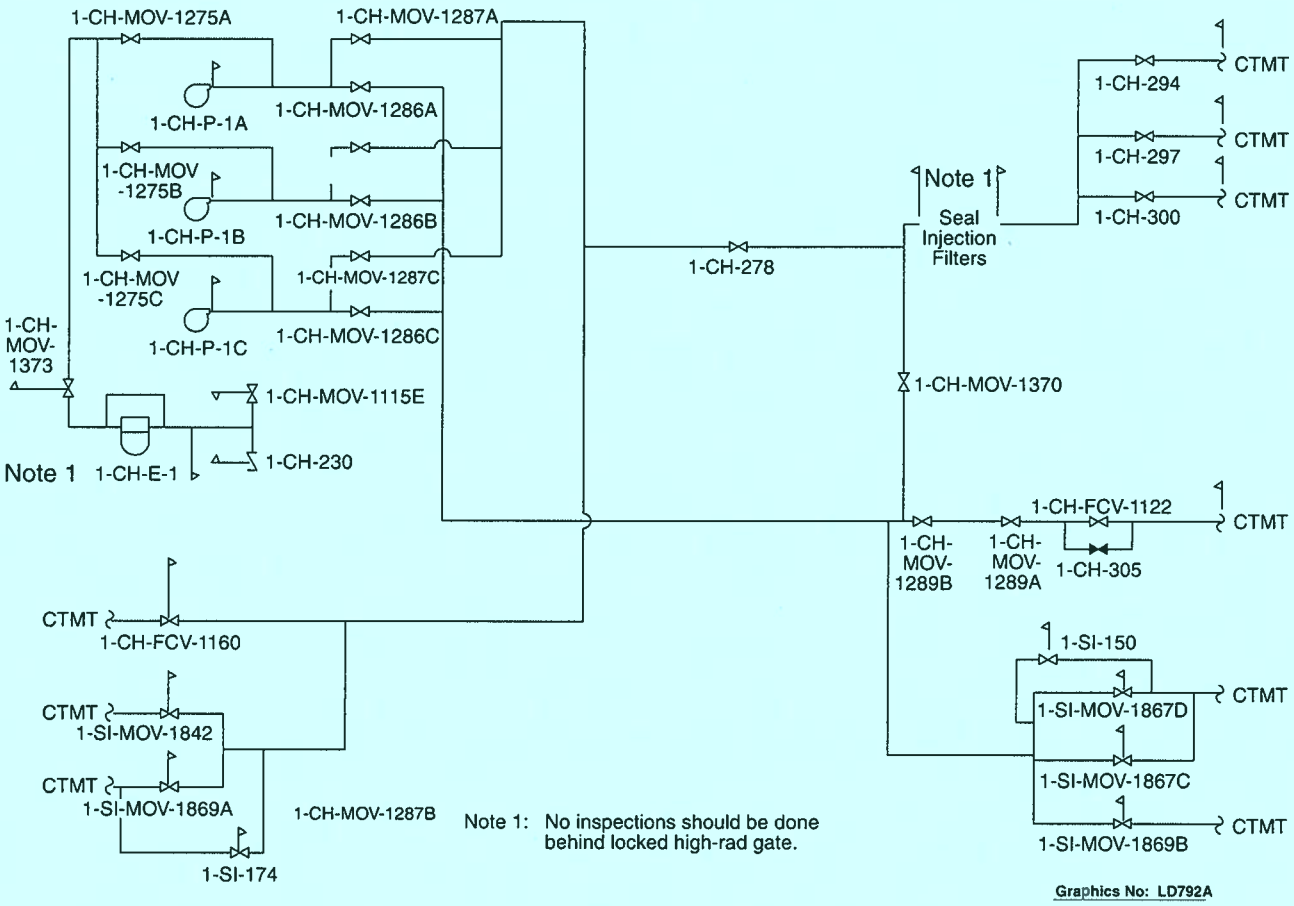

(Page 1 of 2)

Attachment 6
VENTING 1-CH-FT-1182

NOTE: The water and gas vented is potentially contaminated. Appropriate HP precautions shall be taken to prevent the spread of contamination.

NOTE: An HP approved catch container shall be used to collect any water that is vented.

N/A

1. Open 1-CH-ICV-3543, CH Pump 1B Suct FT-1182 Equalizing Valve.

2. Uncap and open 1-CH-ICV-3541, CH Pump 1B Suct FT-1182 (L) Test Isol.

3. WHEN a solid stream of water is obtained, THEN close and cap 1-CH-ICV-3541. IV

4. Uncap and open 1-CH-ICV-3542, CH Pump 1B Suct FT-1182 (H) Test Isol.

5. WHEN a solid stream of water is obtained, THEN close and cap 1-CH-ICV-3542. IV

6. Close 1-CH-ICV-3543, CH Pump 1B Suct FT-1182 Equalizing Valve. IV

7. IF additional venting is required to stabilize 1-CH-P-1B suction flow, THEN perform Steps 8 through 18. IF additional venting NOT required, THEN enter N/A for Steps 8 through 18.

8. Open 1-CH-ICV-3543, CH Pump 1B Suct FT-1182 Equalizing Valve.

9. Uncap and open 1-CH-ICV-3545, CH Pump 1B Suct FT-1182 (L) Vent.

10. WHEN a solid stream of water is obtained, THEN close and cap 1-CH-ICV-3545. IV

11. Uncap and open 1-CH-ICV-3544, CH Pump 1B Suct FT - 1182 (H) Vent.

(Page 2 of 2)

Attachment 6

VENTING 1-CH-FT-1182

N/A _____ _____ IV 12. WHEN a solid stream of water is obtained, THEN close and cap 1-CH-ICV-3544.

_____ 13. Uncap and open 1-CH-ICV-3549, CH Pump 1B Suct FT - 1182 (L) Vent.

_____ _____ IV 14. WHEN a solid stream of water is obtained, THEN close and cap 1-CH-ICV-3549.

_____ 15. Uncap and open 1-CH-ICV-3548, CH Pump 1B Suct FT - 1182 (H) Vent.

_____ _____ IV 16. WHEN a solid stream of water is obtained, THEN close and cap 1-CH-ICV-3548.

_____ _____ IV 17. Close 1-CH-ICV-3543, CH Pump 1B Suct FT-1182 Equalizing Valve.

_____ 18. IF additional venting is required to stabilize 1-CH-P-1B suction flow, THEN repeat Steps 1 through 18 as necessary.

(Page 1 of 1)

Attachment 7
VENTING OF CHARGING PUMP SEALS

N/A
MECH

1. Manually rotate pump shaft.

2. Vent the inboard seal by opening 1-CH-501, CHG Pump 1B Seal Cooler 7D Vent Valve.

3. WHEN air-free water issues from vent, THEN close 1-CH-501.

4. Vent the outboard seal by opening 1-CH-502, CHG Pump 1B Seal Cooler 7C Vent Valve.

5. WHEN air-free water issues from vent, THEN close 1-CH-502.

6. Remove the pump vent rig and install the blank flange on the CHG Pump casing vent flange.

MECH

(Page 1 of 2)

Attachment 8

FLUSHING CHARGING PUMP TO REDUCE BORON DIFFERENTIAL

NOTE: A Charging Pump contains approximately 30 gallons.

N/A

1. Notify Chemistry that pump will be flushed and to standby to take sample for boron.
2. Verify or place Auxiliary Building General ventilation system in service IAW 0-OP-VS-002, Auxiliary Building Ventilation System.
3. Verify open or open sample isolation valve for pump to be started. (✓)
   - 1-CH-254, Chg Pump A Disch Sample Isol
   - 1-CH-263, Chg Pump B Disch Sample Isol
   - 1-CH-272, Chg Pump C Disch Sample Isol
4. Open sample HCV for pump to be started. (✓) .
   - 1-SS-HCV-103A, Chg Pump 1A Disch Sample Isol
   - 1-SS-HCV-103B, Chg Pump 1B Disch Sample Isol
   - 1-SS-HCV-103C, Chg Pump 1C Disch Sample Isol
5. Open 1-SS-14, Chg Pump Disch Sample Isol.
6. Open 1-SS-13, Chg Pump Disch Sample Throttle Valve.
7. Verify flow to Sample Sink.
8. WHEN approximately ten gallons have been flushed, THEN notify Chemistry to obtain sample.
9. Continue flushing pump and obtaining samples until difference between Charging Pump Boron and RCS Boron is less than 360 ppm. IF the difference between RCS boron and pump boron is less than 360 ppm AND it is desired to flush to further reduce boron differential, THEN continue to flush IAW Shift Supervision direction.

(Page 2 of 2)

Attachment 8

FLUSHING CHARGING PUMP TO REDUCE BORON DIFFERENTIAL

10. WHEN ready to secure flush, THEN do the following:

N/A IV

a. Close 1-SS-13, Chg Pump Disch Sample Throttle Valve. |

IV

b. Close 1-SS-14, Chg Pump Disch Sample Isol. |

IV

c. Close sample HCV opened in Step 4. |

(Page 1 of 2)

Attachment 9

SETUP AND INSTALLATION / REMOVAL OF THE ACCU-CAL PLUS DIGITAL PRECISION TEST GAUGE (I&C)

W I&C

1. Turn on the device by holding the power button for 2 - 3 seconds.

   NOTE: Press the CONFIG button to enter setting mode, and press CONFIG to advance to the next option. The up or down arrows will change any individual setting.

   NOTE: If backlighting is necessary to read the display, use the ENTER key to cycle backlighting on or off.

W I&C

2. Verify or set the following settings:

   - Engineering units = PSI
   - Auto Off = 30 minutes
   - Battery Voltage > 3.3 Volts
   - Temperature is displayed (value/units not important)
   - Damping = ON
   - Rate = 10.0/sec
   - Tare = 0.0
   - When display reads FUNC LOCK, press CONFIG to return to the actual pressure reading

N/A W I&C

3. <u>IF</u> required to zero gauge, <u>THEN</u> hold the ZERO key for 1 - 2 seconds until the word HOLD disappears. Otherwise, enter N/A.

4. <u>IF</u> battery voltage is less than 3.3 volts, <u>THEN</u> change batteries IAW the following. (Three AA batteries required) Otherwise, enter N/A.

N/A W I&C

   a. Grasp the face ring and turn approximately 1/4 turn counter-clockwise to remove.

N/A W I&C

   b. Replace the three AA batteries with new ones installed with proper polarity.

(Page 2 of 2)

Attachment 9

SETUP AND INSTALLATION / REMOVAL OF THE ACCU-CAL PLUS DIGITAL PRECISION TEST GAUGE (I&C)

N/A W I&C — c. Reassemble the case making certain the face is properly oriented.

N/A W I&C — 5. IF 1-CH-P-1A running, THEN remove swagelock cap/plug and install the gauge downstream of 1-CH-ICV-3516. Otherwise, enter N/A.

W I&C — 6. IF 1-CH-P-1C running, THEN remove swagelock cap/plug and install the gauge downstream of 1-CH-ICV-3524. Otherwise, enter N/A.

W I&C — 7. Open appropriate ICV to place gauge in service. (✓)

_____ 1-CH-ICV-3516

✓ 1-CH-ICV-3524

W I&C — 8. Notify Operations that gauge is in service.

9. WHEN notified by Operations, THEN remove gauge from service IAW the following:

W I&C — a. Close ICV opened in Step 7. (✓)

_____ 1-CH-ICV-3516

✓ 1-CH-ICV-3524

W I&C — b. Remove the test gauge.

W I&C — c. Reinstall swagelock cap/plug.

W I&C — d. Wipe down fitting and tubing for boric acid residue.