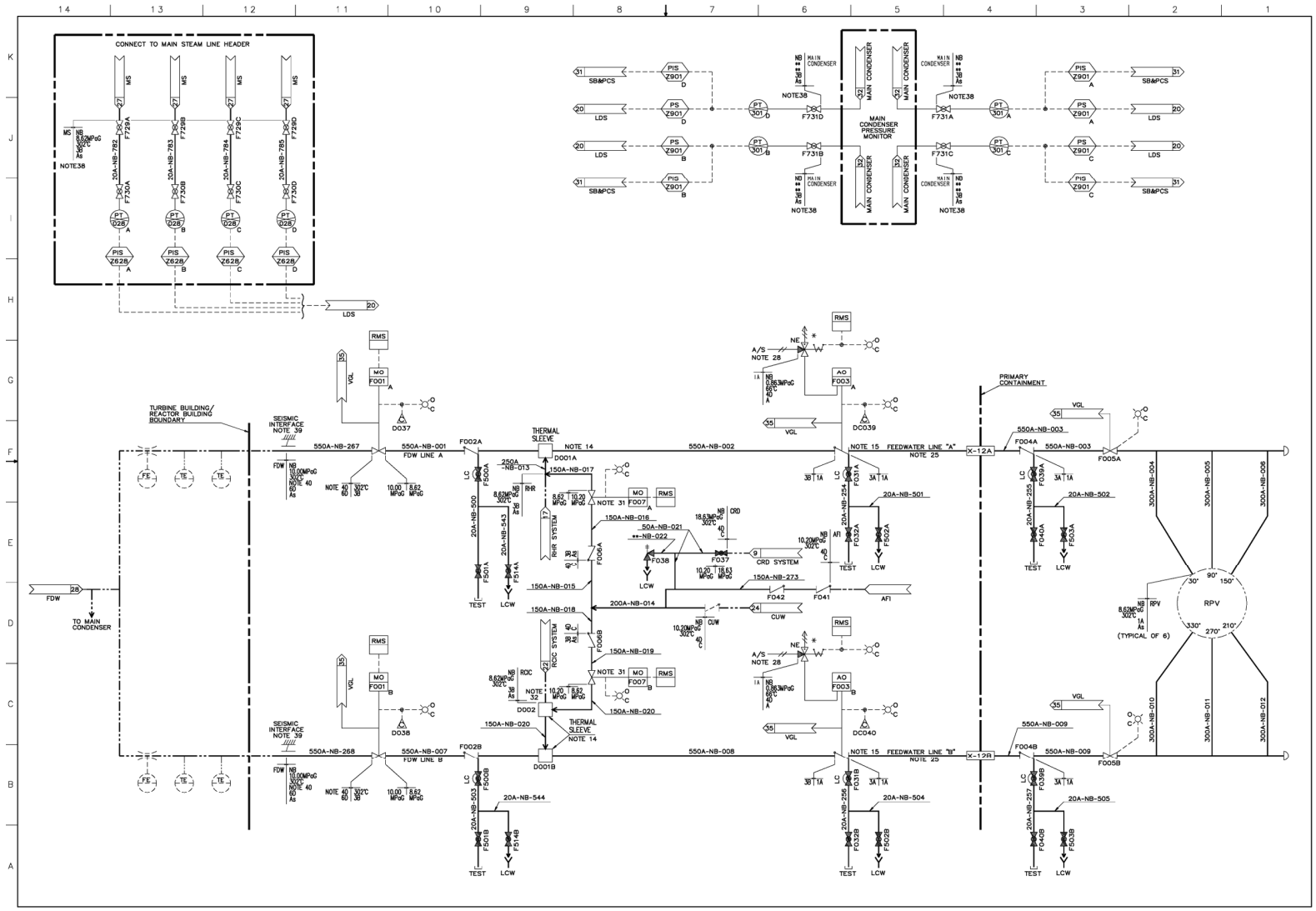

FIGURE 5.1-3 NUCLEAR BOILER SYSTEM P&ID (Sheet 4 of 11)

ABWR-STP AIA Amendment/Tier 2 Rev. 3 21-77

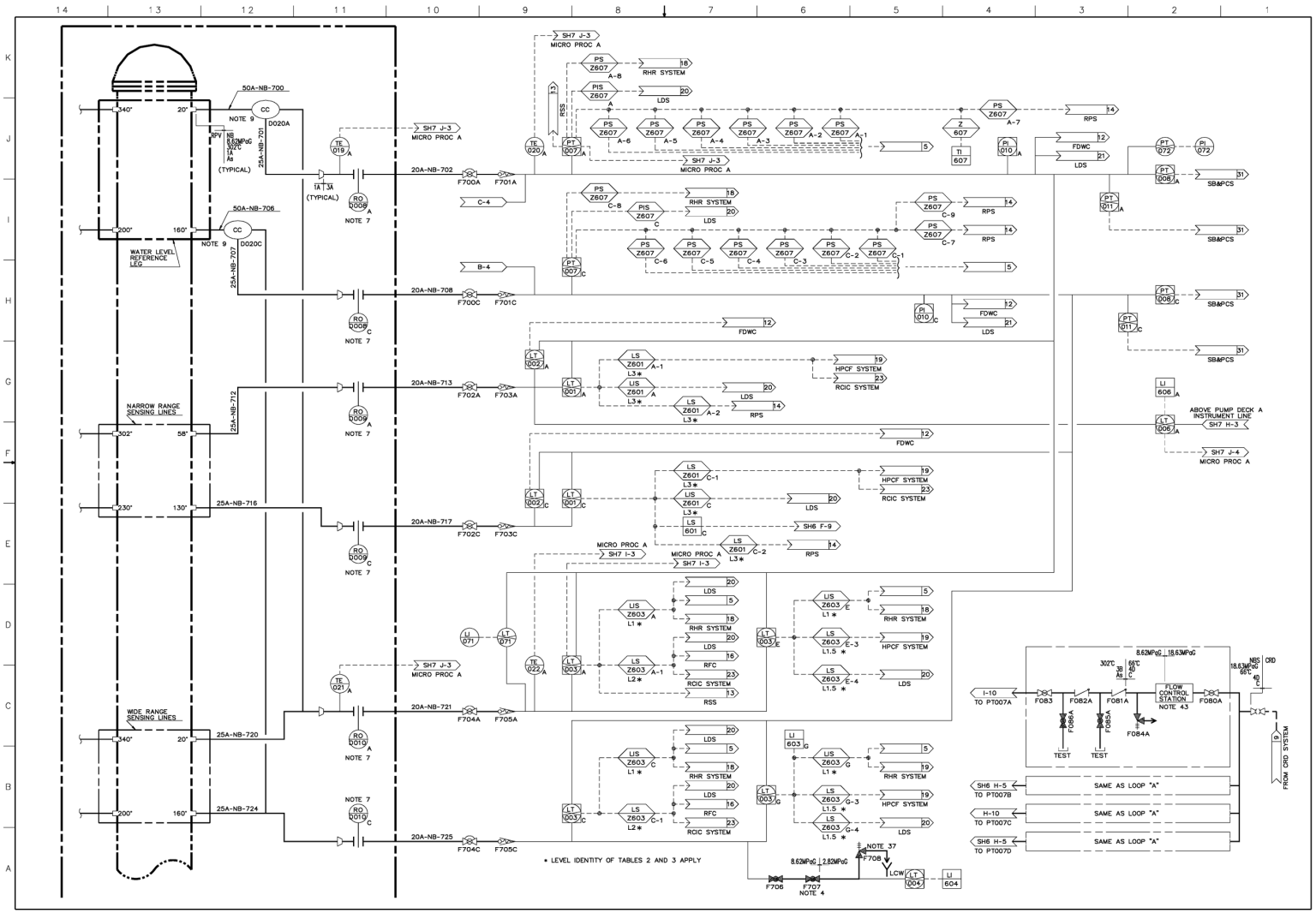

FIGURE 5.1-3 NUCLEAR BOILER SYSTEM P&ID (Sheet 5 of 11)

TABLE 5: PIPING SPECIFICATIONS

PIPE NO.	SCHEDULE	MATERIAL	FLUID
001	**	CS	W
002	**	CS	W
003	100	CS	W
004	100	CS	W
005	100	CS	W
006	100	CS	W
007	**	CS	W
008	**	CS	W
009	100	CS	W
010	100	CS	W
011	100	CS	W
012	100	CS	W
013	**	CS	W
014	**	CS	W
015	**	CS	W
016	**	CS	W
017	**	CS	W
018	**	CS	W
019	**	CS	W
020	**	CS	W
021	**	CS	W
022	**	CS	W
023	80	CS	S
024	**	CS	S
025	80	CS	S
026	**	CS	S
027	80	CS	S
028	**	CS	S
029	80	CS	S
030	**	CS	S
031	N/A	CS	S
032	80	CS	S
033	60	SS	S
034	60	SS	S
035	N/A	CS	S
036	80	CS	S
037	60	SS	S
038	60	SS	S
039	N/A	CS	S
040	80	CS	S
041	60	SS	S
042	60	SS	S
043	N/A	CS	S
044	80	CS	S
045	60	SS	S
046	60	SS	S
047	N/A	CS	S
048	80	CS	S
049	60	SS	S
050	60	SS	S
051	N/A	CS	S
052	80	CS	S
053	60	SS	S
054	60	SS	S
055	N/A	CS	S
056	80	CS	S
057	60	SS	S
058	60	SS	S
059	N/A	CS	S
060	80	CS	S
061	60	SS	S
062	60	SS	S
063	N/A	CS	S
064	80	CS	S
065	60	SS	S
066	60	SS	S
067	N/A	CS	S
068	80	CS	S
069	60	SS	S
070	60	SS	S
071	N/A	CS	S
072	80	CS	S
073	60	SS	S
074	60	SS	S
075	N/A	CS	S
076	80	CS	S
077	60	SS	S
078	60	SS	S
079	N/A	CS	S
080	80	CS	S

TABLE 5: PIPING SPECIFICATIONS (CONT'D)

PIPE NO.	SCHEDULE	MATERIAL	FLUID
081	60	SS	S
082	60	SS	S
083	N/A	CS	S
084	80	CS	S
085	60	SS	S
086	60	SS	S
087	N/A	CS	S
088	80	CS	S
089	60	SS	S
090	60	SS	S
091	N/A	CS	S
092	80	CS	S
093	60	SS	S
094	60	SS	S
095	N/A	CS	S
096	80	CS	S
097	60	SS	S
098	60	SS	S
099	N/A	CS	S
100	80	CS	S
101	60	SS	S
102	60	SS	S
103	120	CS	S
104	160	CS	S
105	160	CS	S
106	160	CS	S
107	160	CS	S
108	160	CS	S
109	**	CS	S
110	**	CS	S
111	**	CS	S
112	**	CS	S
113	**	CS	S
114	**	CS	S
115	**	CS	S
116	**	CS	S
117	**	CS	S
118	**	CS	S
119	**	CS	S
120	**	CS	S
121	**	CS	S
122	**	CS	S
123	**	CS	S
124	**	CS	S
125	**	CS	S
126	**	CS	S
127	**	CS	S
128	**	CS	S
129	80	CS	S
130	80	CS	S
131	80	CS	S
132	**	CS	S
133	80	CS	S
134	80	CS	S
135	80	CS	S
136	80	CS	S
137	80	CS	S
138	80	CS	S
139	80	CS	S
140	80	CS	S
141	80	CS	S
142	80	CS	S
143	80	CS	S
144	80	CS	S
145	80	CS	S
146	80	CS	S
147	80	CS	S
148	80	CS	S
149	80	CS	S
150	80	CS	S
151	80	CS	S
152	80	CS	S
153	80	CS	S
154	80	CS	S
155	80	CS	S
156	80	CS	S
157	80	CS	S
158	80	CS	S
159	80	CS	S
160	80	CS	S

TABLE 5: PIPING SPECIFICATIONS (CONT'D)

PIPE NO.	SCHEDULE	MATERIAL	FLUID
161	80	CS	S
162	80	CS	S
163	80	CS	S
164	80	CS	S
165	80	CS	S
166	80	CS	S
167	80	CS	S
168	80	CS	S
169	**	CS	S
170	**	SS	N
171	**	SS	N
172	**	SS	N
173	**	SS	N
174	**	SS	N
175	**	SS	N
176	**	SS	N
177	**	SS	N
178	**	SS	N
179	**	SS	N
180	**	SS	N
181	**	SS	N
182	**	SS	A
183	**	SS	A
184	**	SS	A
185	**	SS	A
186	**	SS	A
187	**	SS	A
188	**	SS	A
189	**	SS	A
190	**	SS	A
191	**	SS	A
192	**	SS	A
193	**	SS	A
194	**	SS	N
195	**	SS	N
196	**	SS	N
197	**	SS	N
198	**	SS	N
199	**	SS	N
200	**	SS	N
201	**	SS	N
202	**	SS	N
203	**	SS	N
204	**	SS	N
205	**	SS	N
206	**	SS	N
207	**	SS	N
208	**	SS	N
209	**	SS	N
210	**	SS	N
211	**	SS	N
212	**	SS	N
213	**	SS	N
214	**	SS	N
215	**	SS	N
216	**	SS	N
217	**	SS	N
218	**	SS	N
219	**	SS	N
220	**	SS	N
221	**	SS	N
222	**	SS	N
223	**	SS	N
224	**	SS	N
225	**	SS	N
226	**	SS	N
227	**	SS	N
228	**	SS	N
229	**	SS	N
230	**	SS	N
231	**	SS	N
232	**	SS	N
233	**	SS	N
234	**	SS	N
235	**	SS	N
236	**	SS	N
237	**	SS	N
238	**	SS	N
239	**	SS	N
240	**	SS	N

TABLE 5: PIPING SPECIFICATIONS (CONT'D)

PIPE NO.	SCHEDULE	MATERIAL	FLUID
241	**	SS	N
242	**	SS	N
243	**	SS	N
244	**	SS	N
245	**	SS	N
246	**	SS	N
247	**	SS	N
248	**	SS	N
249	**	SS	N
250	**	SS	N
251	**	SS	N
252	**	SS	N
253	**	SS	N
254	160	CS	W
255	160	CS	W
256	160	CS	W
257	160	CS	W
258	160	CS	S
259	160	CS	S
260	160	CS	S
261	160	CS	S
262	160	CS	S
263	160	CS	S
264	160	CS	S
265	160	CS	S
266	**	CS	S
267	**	CS	W
268	**	CS	W
269	**	CS	S
270	**	CS	S
271	**	CS	S
272	**	CS	S
273	**	CS	W
500	**	CS	W
501	160	CS	W
502	160	CS	W
503	**	CS	W
504	160	CS	W
505	160	CS	W
506	**	CS	S
507	**	CS	S
508	**	SS	N
509	**	SS	A
510	**	SS	N
511	**	SS	A
512	**	SS	N
513	**	SS	A
514	**	SS	N
515	**	SS	A
516	**	SS	N
517	**	SS	N
518	**	SS	N
519	**	SS	N
520	**	SS	N
521	**	SS	N
522	**	SS	N
523	**	SS	N
524	**	SS	N
525	**	SS	N
526	**	SS	N
527	**	SS	N
528	**	SS	N
529	**	SS	N
530	**	SS	N
531	**	SS	N
532	**	SS	N
533	**	SS	N
534	**	SS	N
535	**	SS	N
536	**	SS	N
537	**	SS	N
538	**	SS	N
539	**	SS	N
540	**	SS	N
541	**	SS	N
542	**	CS	S
543	160	CS	W
544	160	CS	W

TABLE 5: PIPING SPECIFICATIONS (CONT'D)

PIPE NO.	SCHEDULE	MATERIAL	FLUID
700	80	SS	S
701	**	SS	W
702	**	SS	W
703	80	SS	S
704	**	SS	W
705	**	SS	W
706	80	SS	S
707	**	SS	W
708	**	SS	W
709	80	SS	S
710	**	SS	W
711	**	SS	W
712	80	SS	W
713	**	SS	W
714	80	SS	W
715	**	SS	W
716	80	SS	W
717	**	SS	W
718	80	SS	W
719	**	SS	W
720	80	SS	W
721	**	SS	W
722	80	SS	W
723	**	SS	W
724	80	SS	W
725	**	SS	W
726	80	SS	W
727	**	SS	W
728	**	CS	S
729	**	SS	W
730	**	SS	S
731	**	SS	S
732	80	SS	W
733	**	SS	W
734	80	SS	W
735	**	SS	W
736	80	SS	W
737	**	SS	W
738	80	SS	W
739	**	SS	W
740	80	SS	W
741	**	SS	W
742	80	SS	W
743	**	SS	W
744	80	SS	W
745	**	SS	W
746	80	SS	W
747	**	SS	W
748	80	SS	W
749	**	SS	W
750	80	SS	W
751	**	SS	W
752	80	SS	W
753	**	SS	W
754	80	SS	W
755	**	SS	W
756	80	SS	W
757	**	SS	W
758	80	SS	W
759	**	SS	W
760	80	SS	W
761	**	SS	W
762	80	SS	W
763	**	SS	W
764	**	SS	S
765	**	SS	W
766	**	SS	S
767	**	SS	W
768	**	SS	S
769	**	SS	W
770	**	SS	S
771	**	SS	W
772	**	SS	S
773	**	SS	W
774	**	SS	S
775	**	SS	W
776	**	SS	S
777	**	SS	W
778	**	SS	S
779	**	SS	W

TABLE 5: PIPING SPECIFICATIONS (CONT'D)

PIPE NO.	SCHEDULE	MATERIAL	FLUID
780	**	CS	S
781	**	CS	S
782	**	SS	S
783	**	SS	S
784	**	SS	S
785	**	SS	S