E-12573-171-004

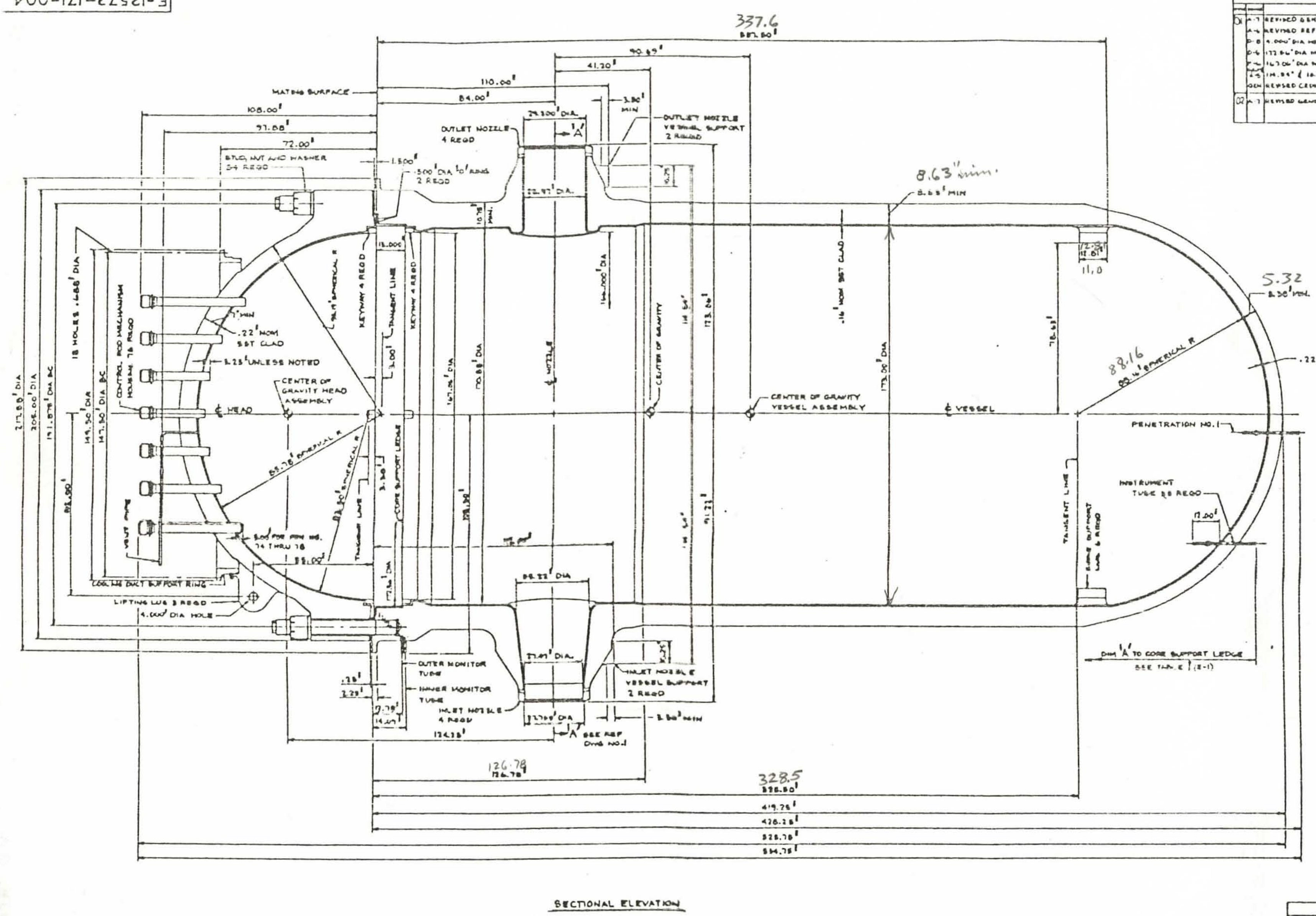

TABLE I (D-2)	
PENETRATION NUMBER	DIMENSION 'A'
1	413.75"
2 AND 3	413.50"
4 AND 5	412.89"
6 AND 7	412.22"
8	411.[illegible]"
9 AND 10	410.[illegible]"
11 AND 12	410.26"
13	[illegible]"
14 AND 15	[illegible]"
16 AND 17	[illegible]"
18 THRU 21	407.06"
22 AND 23	406.28"
24 THRU 27	404.16"
28	405.79"
29 AND 30	402.47"
31	401.16"
32 AND 33	400.20"
34 AND 35	399.41"
36 AND 37	398.97"
38 THRU 40	397.59"
41 AND 42	392.16"
43 AND 44	393.58"
45 THRU 47	392.51"
48 AND 49	391.91"
50 AND 51	391.41"
52 THRU 54	388.91"
55 THRU 58	383.34"

WEIGHT TABLE	
COMPONENT	WEIGHT
VESSEL	661,[illegible]#
CLOSURE HEAD	165,160#
STUDS, NUTS, AND WASHERS	37,152#
TOTAL	863,[illegible]#

GENERAL NOTES

1. ALL DIMENSIONS ARE REFERENCE.
2. ALL FABRICATION SHALL BE IN ACCORDANCE WITH:
   (A) ASME CODE SECTION III THROUGH WINTER 1972 ADDENDA.
   (B) WESTINGHOUSE E-SPECIFICATION 676413, REV. 4 AND ADDENDUM 3C25.49 REV 1 WITH INTERIM REVISIONS 1 THROUGH 10.
3. DESIGN PRESSURE 2,500 PSI.
4. DESIGN TEMPERATURE: 650°F.

REFERENCE DRAWINGS

NO.	TITLE	DRAWING NUMBER
1	GENERAL ARRANGEMENT - PLAN -	[illegible]
2	UPPER VESSEL MACHINING	[illegible]
3	UPPER VESSEL MACHINING	[illegible]
4	UPPER VESSEL MACHINING	[illegible]
5	UPPER VESSEL MACHINING	[illegible]
6	UPPER VESSEL TO LOWER VESSEL ASSEMBLY	E-12573-171-001
7	CLOSURE HEAD FINAL MACHINING	[illegible]
8	CLOSURE HEAD ASSEMBLY	[illegible]

GENERAL ARRANGEMENT
- ELEVATION -
WESTINGHOUSE ELECTRIC CORP
173" ID PWR

E 12573-171-004 02

SCALE .75" = 12" | 12573

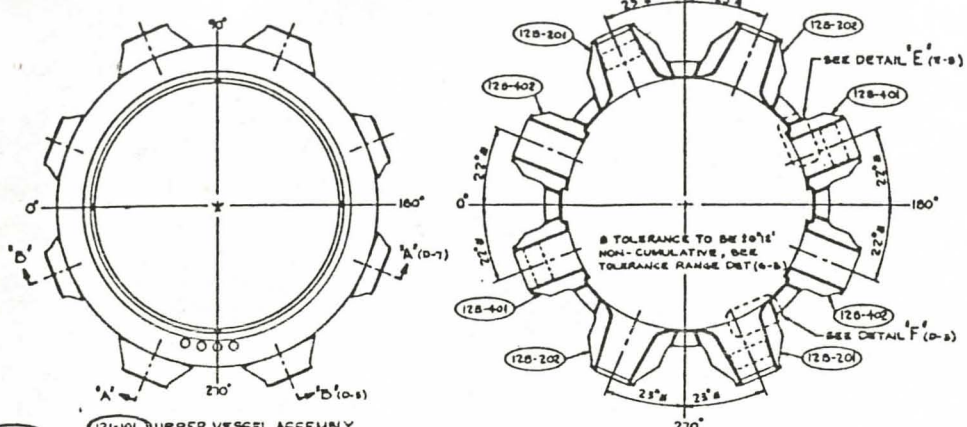

121-101 UPPER VESSEL ASSEMBLY
SCALE .38"=1'2"

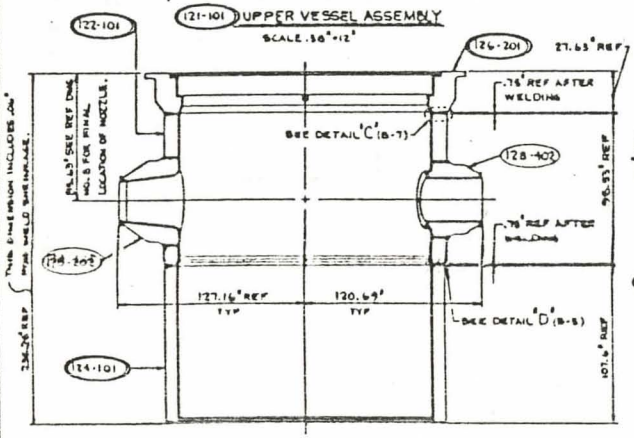

PLAN VIEW AT NOZZLE ELEVATION
SCALE .38"=1'2"

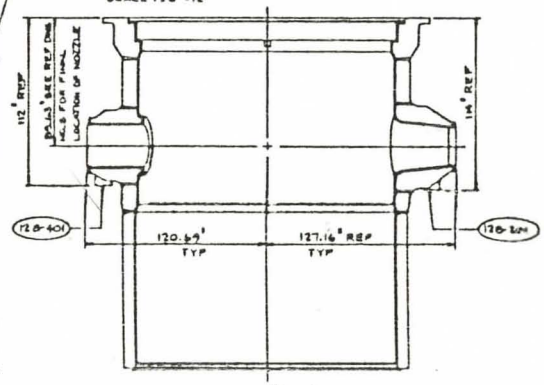

SECTION 'B-B' (B-7)
SCALE .38"=1'2"

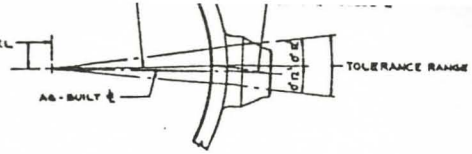

NOTES

1. THE AS-BUILT ℄ IS A LINE PASSING THROUGH OUTER CENTER OF NOZZLE AND THROUGH CENTER OF VESSEL.
2. THE ACTUAL NOZZLE ℄ MUST BE PARALLEL TO AS-BUILT ℄ WITHIN .08" PER FOOT AND MUST NOT LIE OUTSIDE TOLERANCE RANGE AT ANY POINT.

TOLERANCE RANGE DETAIL (C-8)
SCALE NONE

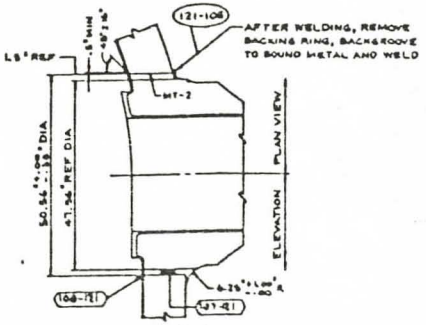

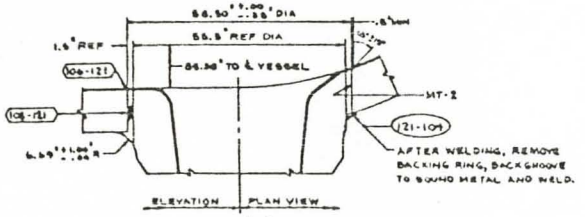

DETAIL 'F' (D-8)
SCALE 1"=1'2"

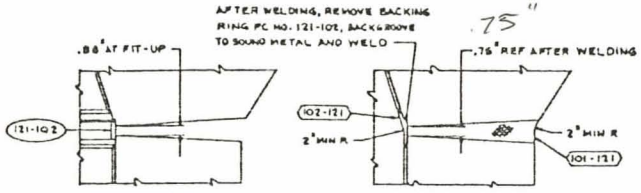

DETAIL 'C' (B-7)
SCALE 3"=1'2"

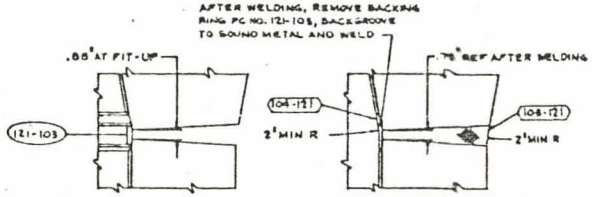

DETAIL 'D' (E-6)
SCALE 3"=1'2"

6 IN-PROCESS ULTRASONIC INSPECTION SHALL BE PERFORMED BEFORE FINAL STRESS RELIEF.

106-121		S	F							B	F					
105-121					T			I	F		F					
104-121		S	F							B	F					
103-121					T			I	F		F					
102-121		S	F							B	F					
101-121					T			I	F		F					
WELD NUMBER	BWP NUMBER	MAT'L										P-8	121-101			

128-402	2	OUTLET NOZZLE		
128-401	2	OUTLET NOZZLE (SEE REF DWG NO. 6)		
128-202	2	INLET NOZZLE		
128-201	2	INLET NOZZLE (SEE REF DWG NO. 6)		
124-102	1	VESSEL FLANGE ASSY (SEE REF DWG NO. 4)		
124-101	1	INTERMEDIATE SHELL ASSY (SEE REF DWG NO. 3)		
122-101	1	UPPER SHELL ASSY (REF DWG NO. 2)		
121-108	4	50" THK x 4" LG x 6" LG		
121-104	4	50" THK x 38.63" LG x 44.50" LG		
121-105	1	38" THK x 7.50" LG x 13.88" LG		
121-102	1	BACKING RING .50" THK x 1.63" LG x 61" DEVELOPED LENGTH @ 126.94		
		UPPER VESSEL ASSY CONSISTING OF:		

GENERAL NOTES
1. ALL WELDS, WHERE TWO OR MORE ARE REQUIRED HAVING THE SAME NUMBER, WILL BE IDENTIFIED WITH SUFFIX A, B, C ETC STARTING AT THE 0° AXIS AND GOING CLOCKWISE.
2. ALL CLADDING TO BE AS DEPOSITED FINISH UNLESS NOTED AND A MIN THICKNESS OF .13" UNLESS NOTED.

NO	REFERENCE DRAWINGS TITLE	DRAWING NUMBER
1	PROCESS SPECIFICATIONS	E-12573-143-002
2	UPPER SHELL	E-12573-122-001
3	INTERMEDIATE SHELL	E-12573-124-001
4	VESSEL FLANGE MACHINING AND CLADDING	E-12573-126-002
5	INLET NOZZLE CLADDING AND MACHINING	E-12573-128-002
6	OUTLET NOZZLE CLADDING AND MACHINING	E-12573-128-001
7	UPPER VESSEL MACHINING	E-12573-121-002
8	LOWER VESSEL MACHINING	E-12573-121-003

UNLESS OTHERWISE SPECIFIED

1. DIMENSIONS & TOLERANCES TO CONFORM TO ASME Y14.5 - 1994
2. ALL DIMENSIONS APPLY AT REFERENCE TEMP OF 68°F
3. REF DIMENSIONS ARE FOR INFORMATION ONLY AND MAY HAVE MORE THAN ONE FABRICATION
4. MACHINE ROUGHNESS 125 MICROINCHES OR BETTER EXCEPT AS NOTED
5. BREAK ALL SHARP EDGES WITH APPROX .03" CHAMFER OR EQUIVALENT
6. WELDING PROCEDURES, WELDERS, BRAZERS OR BRAZING OPERATORS SHALL BE QUALIFIED IN ACCORDANCE WITH ASME SECTION IX
7. WELD OR BRAZE ALL NON-PRESSURE PARTS TO PRESSURE RETAINING PARTS BY FULL PENETRATION OR FULL FILLET WELDS OR BRAZES
8. TOLERANCES SHALL BE ±1/2° ON ANGLES AND ±0.030" ON LINEAR DIMENSIONS UNLESS OTHERWISE SPECIFIED
9. SEE REF DWG NO. 5 FOR PART LOCATION DIMENSIONS
10. SEE DWG E-12573-001 FOR APPLICABLE EQUIPMENT SPECIFICATIONS
11. ENLARGE & VERIFY INDICATED DIMENSION TO GIVEN REFERENCE LINE
12. DIMENSIONS SHOWN IN 1/16" IS GIVEN ON MEAN CENTERLINE

D																
C																
B																
A																

DRAWN	DATE	1-5-77	
CHK BY	DATE	1-10-77	
ENGR	DATE	1-10-77	
PROJ ENGR	DATE	1-12-77	
MFG ENGR	DATE	1-12-77	
QA	DATE	1-12-77	

UPPER VESSEL ASSEMBLY
NESTINGHOUSE ELECTRIC CORP
173"ID PWR

CE E 12573-121-001 REV 01
SIZE AS NOTED CONT 12573 SHEET

8 | 7 | 6 | 5 | 4 | 3 | 2 | 1

E-12573-121-002

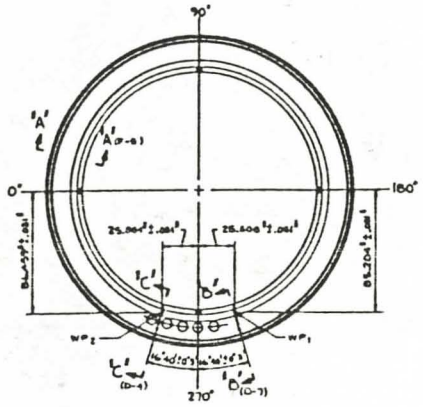

(121-201) UPPER VESSEL ASSEMBLY
SCALE .875" = 12"

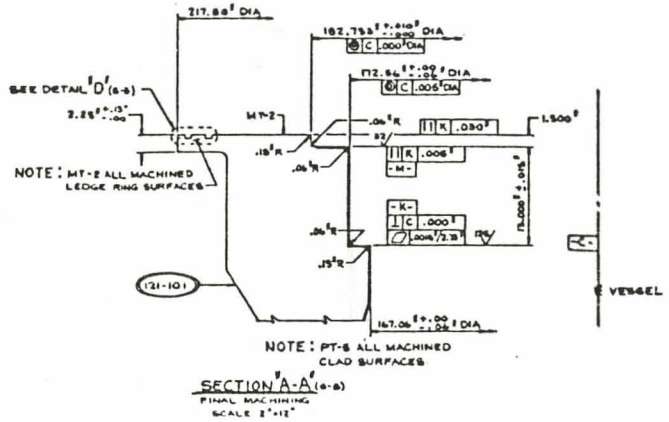

NOTE: MT-2 ALL MACHINED LEDGE RING SURFACES

NOTE: PT-6 ALL MACHINED CLAD SURFACES

SECTION 'A-A' (D-6)
FINAL MACHINING
SCALE 2" = 12"

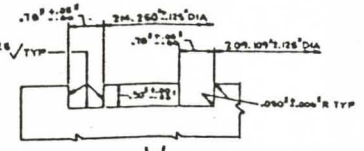

DETAIL 'D' (H-6)
SCALE 12" = 12"

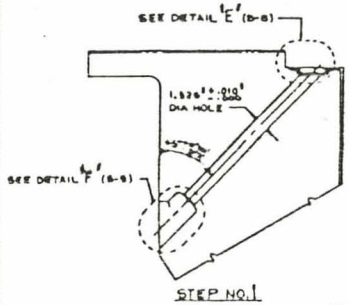

STEP NO. 1

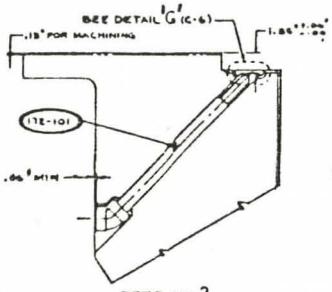

STEP NO. 2

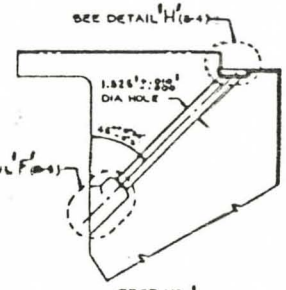

STEP NO. 1

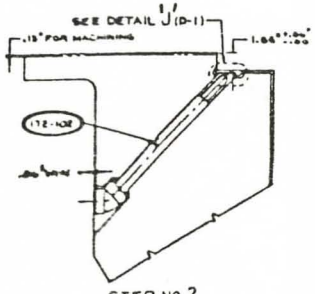

STEP NO. 2

SECTION 'C-C' (F-6)
SCALE 3" = 12"

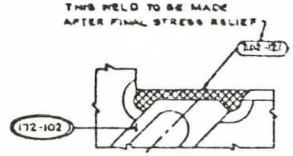

DETAIL 'J' (E-8)
SCALE 12" = 12"

SECTION 'D-D' (F-7)
SCALE 3" = 12"

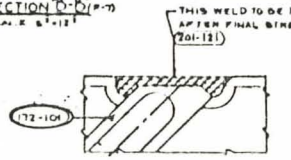

DETAIL 'G' (E-6)
SCALE 12" = 12"

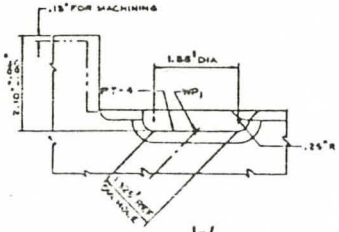

DETAIL 'F' (E-8)
SCALE 12" = 12"

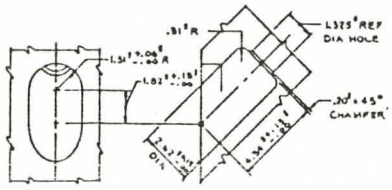

DETAIL 'F' (E-8 & E-6)
SCALE 6" = 12"

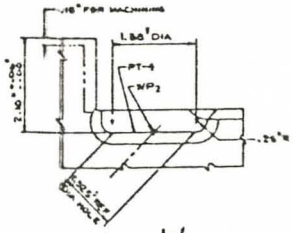

DETAIL 'H' (E-6)
SCALE 12" = 12"

GENERAL NOTES
1. ALL CLADDING TO BE AS DEPOSITED FINISH UNLESS NOTED AND A MINIMUM THICKNESS OF .15" UNLESS NOTED.

NO	REFERENCE DRAWINGS TITLE	DRAWING NUMBER
1	PROCESS SPECIFICATIONS	E-12573-121-003
2	UPPER VESSEL ASSEMBLY	E-12573-121-001
3	MONITOR TUBE	E-12573-121-001
4	UPPER VESSEL MACHINING	E-12573-121-004

NO	QTY	NOMENCLATURE
1	1	WATER MONITOR TUBE ASSY.
1	1	INTERFACE WELD FOR PIPE ASSY. SEE REF DWG NO. 3
121-101	1	UPPER VESSEL ASSEMBLY SEE REF DWG NO. 2
121-201	1	UPPER VESSEL ASSEMBLY CONSISTING OF:

WELD TABLE

UNLESS OTHERWISE SPECIFIED

LIST OF MATERIAL - QUANTITIES FOR ONE (1) UNIT, ONE (1) UNIT IN CONTRACT

UPPER VESSEL MACHINING
WESTINGHOUSE ELECTRIC CORP
173" ID PWR

E 12573-121-002 00

SCALE AS NOTED CONT 12573

E-12573-121-003

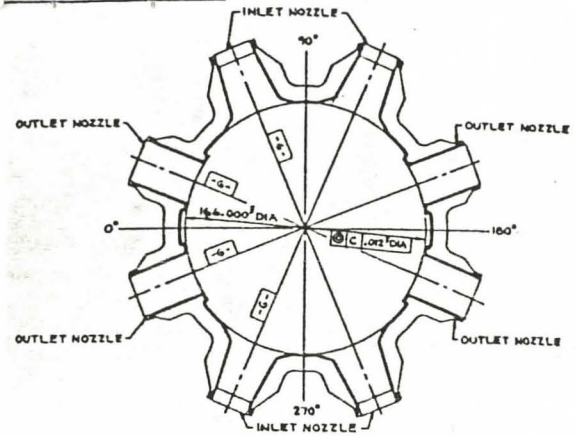

PLAN VIEW AT NOZZLE ELEVATION
SCALE .375'=1'

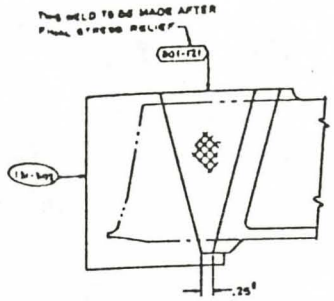

STEP NO.1

NOTE: PT-4 ALL MACHINED SAFE END SURFACES

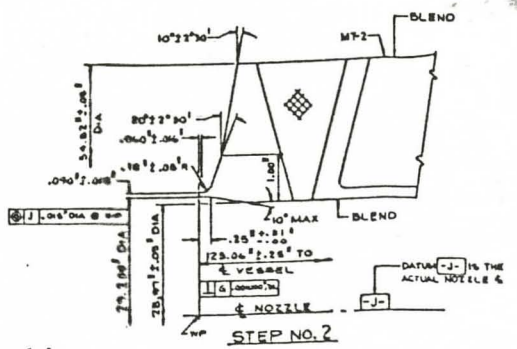

STEP NO.2

DETAIL 'B' (E-8)
TYPICAL ALL OUTLET NOZZLES
SCALE 12'=1'

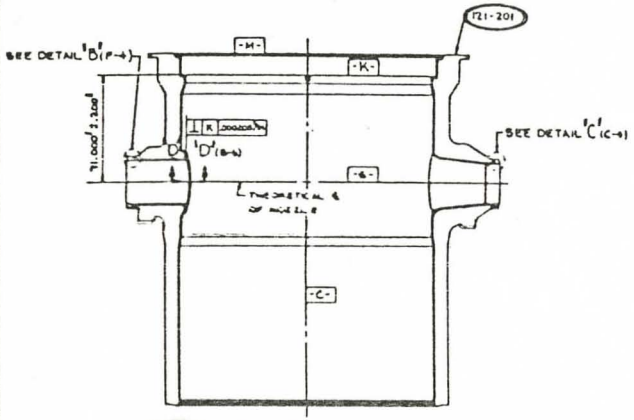

121-301 UPPER VESSEL ASSEMBLY
SCALE .375'=1'

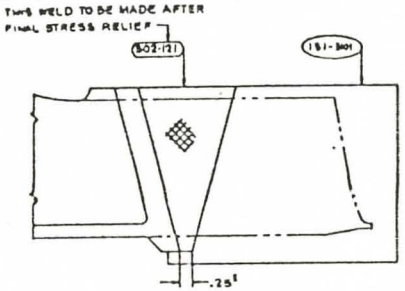

STEP NO.1

NOTE: PT-4 ALL MACHINED SAFE END SURFACES

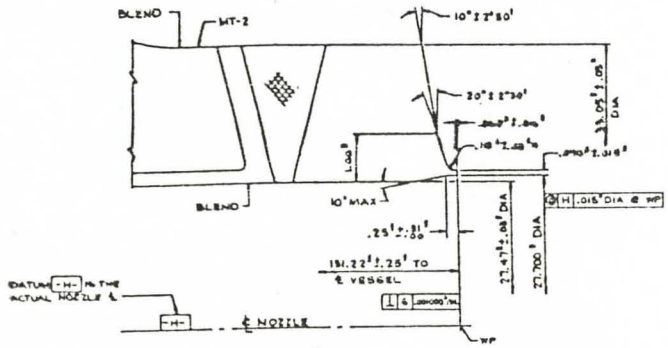

STEP NO.2

DETAIL 'C' (E-4)
TYPICAL ALL INLET NOZZLES
SCALE 12'=1'

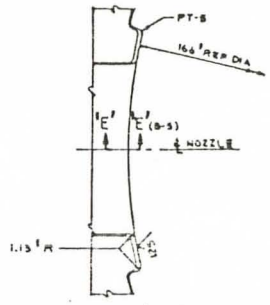

SECTION 'D-D' (E-8)
TYPICAL ALL OUTLET NOZZLES
SCALE 1.5'=1'

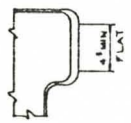

SECTION 'E-E' (C-4)
SCALE 3'=1'

GENERAL NOTES

1. ALL CLADDING TO BE AS DEPOSITED FINISH UNLESS NOTED AND A MINIMUM THICKNESS OF .13" UNLESS NOTED.
2. ALL WELDS, WHERE TWO OR MORE ARE REQUIRED HAVING THE SAME NUMBER, WILL BE IDENTIFIED WITH SUFFIX A, B, C ETC STARTING AT THE 0° AXIS AND GOING CLOCKWISE.

REFERENCE DRAWINGS

NO.	TITLE	DRAWING NUMBER
1	PROCESS SPECIFICATIONS	B-12573-163 002
2	UPPER VESSEL ASSEMBLY	E-12573-121-001
3	173" I.D. S.E. ENDS	E-SPDH-1761-011
4	UPPER VESSEL MACHINING	E-12573-121-002
5	LOWER VESSEL MACHINING	E-SPDH-1721-013
-	121 CORE MACHINING	W-SPDH-1121-014

MATERIAL NOTES

"A" AS SUPPLEMENTED BY CE PURCHASED SPECIFICATION N-PBC3(B) AND ADDENDA 1(B)1 & 2(B) AND CONTRACT SUPPLEMENT 12513-1(B).

												SEE NOZ.	4	OUTLET NOZ SAFE END	
												SEE NOZ.	4	INLET NOZ SAFE END PREHEAT Diag No. 4	
												1		UPPER VESSEL ASSY PREHEAT Diag No. 5	
121-201												1		UPPER VESSEL ASSEMBLY FORGING QPT	
D-8	121-301														
ITEM NUMBER	PART NUMBER	NO. REQD	MATERIAL SPEC.	GRADE	CLASS	TYPE	HEAT TREAT	MATERIAL SPEC.	GRADE	CLASS	TYPE	HEAT TREAT	ITEM NUMBER	NOMENCLATURE	MATERIAL SPEC.

302-121	No. Drawing Sheet: B-12573-106	4	SA- P-1				1	P	11	P					
301-121	No. Drawing Sheet: B-12573-106	4	SA- P-1				1	P	11	P					
WELD NUMBER	WELD NUMBER	NO. REQD	P1	GR	CL	TYPE	P2	GR	CL	TYPE	ADDITIONAL REQUIREMENTS				

WELD TABLE

LIST OF MATERIAL QUANTITIES FOR SHIP (Item 1, See Layout on Contract)

UNLESS OTHERWISE SPECIFIED

1. DIMENSIONING & TOLERANCING TO ASME Y14.5 - 1966
2. ALL DIMENSIONS APPLY AT REFERENCE TEMP OF 68°F.
3. REF DIMENSIONS ARE FOR INFORMATION ONLY & DO NOT GOVERN FOR FABRICATION.
4. MACHINING ALLOWANCE AS SHOWN FOR 1.00 MIN STOCK REMOVAL - 2.0 MAX DEPTH
5. SURFACE ROUGHNESS SHOWN WITH SYMBOL 250 OR SMOOTHER UNLESS OTHERWISE NOTED.
6. ALL MACHINED SURFACES INTERNAL - EXCEPT OR BETTER EXTERNAL UNLESS OF BETTER
7. WELD MILL TO BE FINISHED FLUSH - NO ALLOWABLE MADE FOR FABRICATION OR WELD SHRINKAGE.
8. TOLERANCES: DECIMAL ± .1' ; .X ± .2' ; .XX ± .10' ; .XXX ± .100' UNLESS OTHERWISE SPECIFIED
9. ALL PART MARKING TO BE HOT STAMP NO. OR WELD PADS & NOT A MILL OUT ON BASE.
10. ALL GOING TO BE IN ACCORDANCE WITH APPLICABLE ENGINEERING SPECIFICATIONS
11. DOUBLE DIMENSION INDICATES DIMENSION TO GIVEN CENTERLINE OR LINE
12. DEVELOPED LENGTH OF 1/2" OR GIVEN ON BEND CENTER LINE

DRAWING TOLERANCES FOR MACHINED SURFACES UNLESS OTHERWISE SPECIFIED

DECIMAL	FRACTIONAL
.X ± .1	1/2 ± 1/64
.XX ± .10	1/4 ± 1/32
.XXX ± .100	1/8 ± 1/64
	1/16 ± 1/64

DRAWN BY	A.D. Sherman	1-12-72	
TRACED BY			
DESIGNED BY			
CHECKED BY			
ENGINEER			
APPROVED			

COMBUSTION ENGINEERING, INC. WINDSOR, CONN.
DIVISION OF NUCLEAR SYSTEMS

UPPER VESSEL MACHINING
WESTINGHOUSE ELECTRIC CORP
173" I.D. PWR

E 12573-121-003 Ø

SCALE AS NOTED | 12573 | SHEET

7/6/72

D-12573-128-001

REVISIONS				
BY	ZONE	DESCRIPTION	DATE	APPROVED
01	D-3 A-3	REV MATL NOTE 'A'. REV MATL SPEC ON PC NO. 128-101.	3/2/74 4-5-74	J. HELGSON Y.Y. C.D.RIGGS

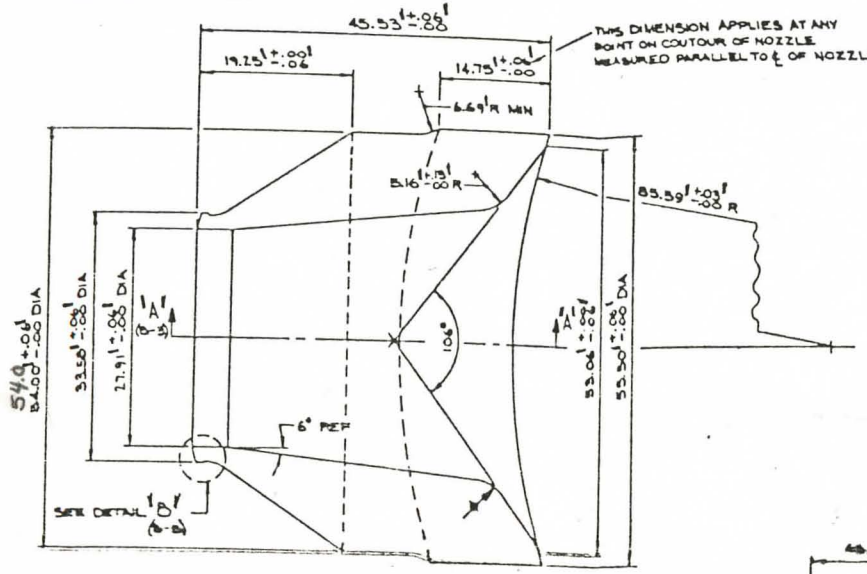

PLAN VIEW

(128-101) INLET NOZZLE

SCALE 1.5'=12'

WEIGHT=14,360 lbs

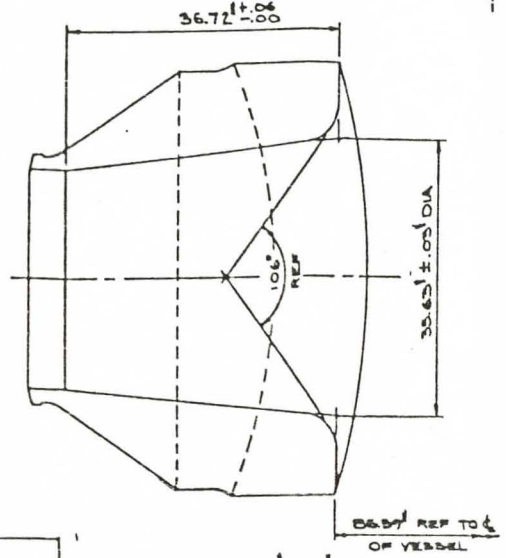

SECTION 'A-A' (C-8)

SCALE 1.5'=12'

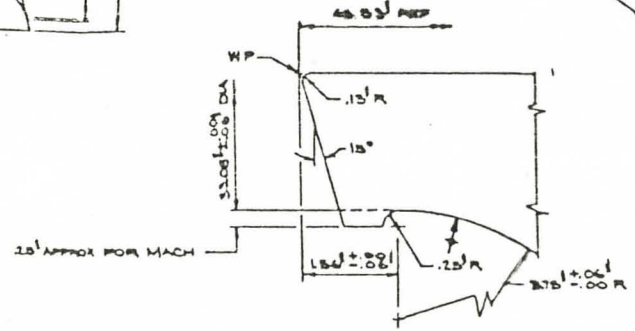

DETAIL 'B' (C-8)

SCALE 12'=12'

MATERIAL NOTES

'A' = AS SUPPLEMENTED BY SE PURCHASE SPECIFICATION N-P3C16(b) & ADDENDA 2(a), 4(a), 5(a) & 6(b).

WELD NUMBER	D W P NUMBER	NO	PT	FREQ	NO	UT	FREQ	NO	UT	FREQ	NO	UT	FREQ	APP/CHECK

WELD TABLE

ZONE	ADD'L NO	PC NO	NO REQ'D	NOMENCLATURE	MATERIAL	MATERIAL SPEC	MATERIAL NOTES
B-7		128-101	4	INLET NOZZLE (SEE DETAIL)	ALLOY STL	SA-508-CL3	'A'

LIST OF MATERIAL - QUANTITIES FOR ONE (1) UNIT, ONE (1) UNIT ON CONTRACT

GENERAL NOTES

1. ------ DENOTES CLAD MACHINING.
2. -◆- DENOTES HIGH STRESS AREA.

REFERENCE DRAWINGS

NO.	TITLE	DRAWING NO.
1	INLET NOZZLE CLADDING AND MACHINING	D-12573-128-002

UNLESS OTHERWISE SPECIFIED

1. DIMENSIONS & TOLERANCES TO USASI Y14.5 - 1966
2. ALL DIMENSIONS APPLY AT REFERENCE TEMP. OF 68° F
3. REF. DIMENSIONS ARE FOR INFORMATION ONLY. DO NOT USE FOR FABRICATION.
4. MARKING SYMBOLS VT=VIBRO TOOL LSS=LOW STRESS STAMP, .03" MAX. DEPTH
5. BREAK ALL SHARP EDGES WITH APPROX. .03" RADIUS OR CHAMFER
6. MACHINED SURFACES INTERNAL - 250AA OR BETTER; EXTERNAL-500AA OR BETTER
7. SIZES IN L/M ARE FINISHED SIZES - NO ALLOWANCE MADE FOR FABRICATION OR WELD SHRINKAGE.
8. TOLERANCE ON .X' = ± .06', .XX' = ± .010', ANGLES ± 0° - 30'
9. SEE REF. DWG. NO. ____ FOR NOZ. ITEM NO. IN WELD TABLE & NOT CALL-OUT ON DWG.
10. SEE DWG. _____ FOR APPLICABLE EQUIPMENT SPECIFICATIONS.
11. DOUBLE ARROW INDICATES DIMENSION TO GIVEN REFERENCE LINE.
12. DEVELOPED LENGTH IN L/M IS GIVEN ON MEAN CENTERLINE.

GEOMETRIC TOLERANCES FOR MACHINED SURFACES UNLESS SPECIFIED ON DRAWING

SYM	GEOMETRY	TOL
	FLATNESS	.001"/IN
	STRAIGHTNESS	.001"/IN
	ROUNDNESS	SEE DWG
	CYLINDRICITY	SEE DWG
	SHADING OF LINE	SEE DWG
	PROFILE OF SURFACE	SEE DWG
	PARALLELISM	.001"/IN
	PERPENDICULARITY	.001"/IN
	CONCENTRICITY	SEE DWG
	RUNOUT	SEE DWG
	TRUE POSITION	SEE DWG
	ESSENTIALITY	SEE DWG
	SYMMETRY	SEE DWG

DRN BY ANTHONY A. SIMS 7-15-74
CKD BY [illegible] 7-16-74
DATE 7-16-74
ANAL SHOP [illegible]
DATE 7-16-74
PHILL ENGR [illegible]
DATE 7-16-74
APPROVAL

COMBUSTION ENGINEERING, INC. WINDSOR, CONN.

INLET NOZZLE

WESTINGHOUSE ELECTRIC CORP.
178" ID PWR

CHATTANOOGA

SIZE D | 12573-128-001 | REV 01

SCALE AS SHOWN | CONT 12573 | SHEET

D-12573-128-002

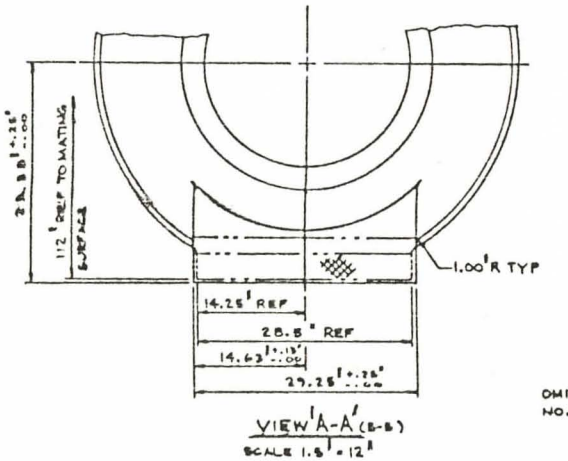

VIEW A-A (B-B)
SCALE 1.5 = 12

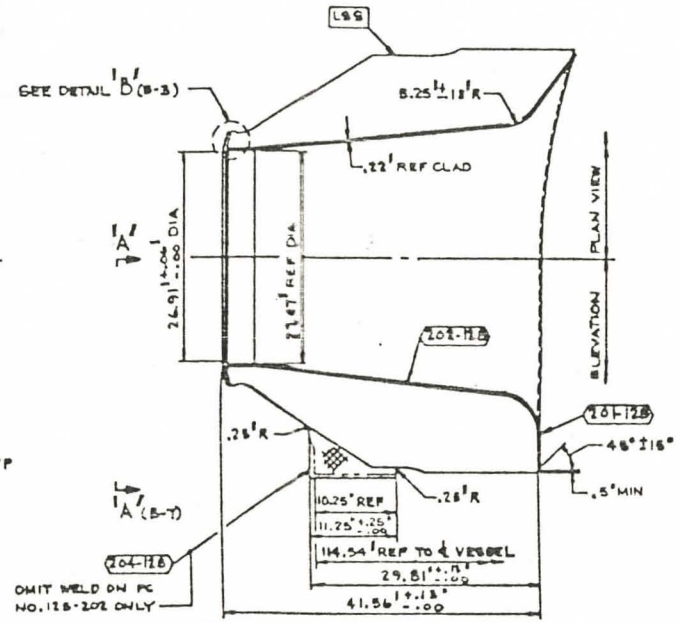

(128-201) INLET NOZZLE AS SHOWN

(128-202) INLET NOZZLE AS SHOWN AND NOTED

SCALE 1.5 = 12

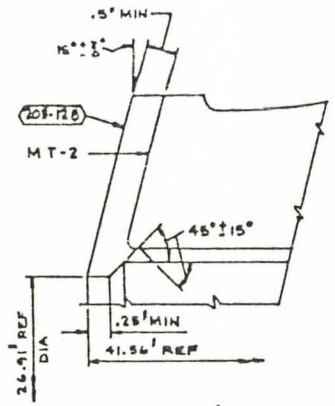

DETAIL B (C-6)
SCALE 12 = 12

WELD NUMBER	DWP NUMBER	NO	FINISH	NO.	FINISH	NO.	FINISH	NO.	FINISH	# OF CHORDS	ZONE	ASS'Y NO	PC NO	NO REQ'D	NOMENCLATURE	MATERIAL	MATERIAL SPEC	MATERIAL NOTES
		FT		NT		ST		UT							WELD TABLE			
204-128	N-DWPS-SMA-3.3-104-1			2	F			26	F									
203-128	N-DWPS-SMA-3.43-204-1	4	F			1	F	27	F									
202-128	N-DWPS-SAA-3.8-111-0	5	F					8	F	23	B-B		128-202	2	INLET NOZZLE			
201-128	N-DWPS-SMA-3.0-101-0	5	F					8	F		B-B		128-201	2	INLET NOZZLE SEE REF DWG NO. 2			

LIST OF MATERIAL - QUANTITIES FOR ONE (1) UNIT, ONE (1) UNIT ON CONTRACT

GENERAL NOTES

1. ALL CLADDING TO BE AS DEPOSITED FINISH UNLESS NOTED AND A MINIMUM THICKNESS OF .12" UNLESS NOTED.

REFERENCE DRAWINGS

NO.	TITLE	DRAWING NUMBER
1	PROCESS SPECIFICATIONS	S-12573-169-002
2	INLET NOZZLE	D-12573-128-001
3	UPPER VESSEL ASSEMBLY	E-12573-121-001

UNLESS OTHERWISE SPECIFIED

1. DIMENSIONS & TOLERANCES TO USASI Y14.5 - 1966
2. ALL DIMENSIONS APPLY AT REFERENCE TEMP. OF 68° F.
3. REF. DIMENSIONS ARE FOR INFORMATION ONLY. DO NOT USE FOR FABRICATION.
4. MARKING SYMBOLS VT = VIBRO TOOL LOW STRESS STAMP, .05" MAX. DEPTH
5. BREAK ALL SHARP EDGES WITH APPROX. .06" RADIUS OR CHAMFER
6. MACHINED SURFACES: INTERNAL - 250AA OR BETTER. EXTERNAL - 500AA OR BETTER
7. SIZES IN L/H ARE FINISHED SIZES - NO ALLOWANCE MADE FOR FABRICATION OR WELD SHRINKAGE
8. TOLERANCES ON .X" = ±.1", .XX" = ±.06", .XXX" = ±.010" ANGLES ± 0° 30'
9. SEE REF. DWG NO. 1 FOR HOT ITEM NO. IN WELD TABLE & NOT CALL-OUT ON DWG.
10. SEE DWG. S-12573-111-004 FOR APPLICABLE EQUIPMENT SPECIFICATIONS.
11. DOUBLE ARROW INDICATES DIMENSION TO GIVEN REFERENCE LINE.
12. DEVELOPED LENGTH IN L/H IS GIVEN ON MEAN CENTERLINE.

GEOMETRIC TOLERANCES FOR MACHINED SURFACES UNLESS SPECIFIED ON DRAWING

SYM	GEOMETRY	TOL
	FLATNESS	.001/IN
	STRAIGHTNESS	.001/IN
	ROUNDNESS	.001 DIA
	CYLINDRICITY	.001 DIA
	PROFILE OF LINE	.001 DIA
	PROFILE OF SURFACE	.001 DIA
//	PARALLELISM	.001/IN
⊥	PERPENDICULARITY	.001/IN
	ANGULARITY	.001 DIA
	RUNOUT	.001 DIA
	TRUE POSITION	.010 DIA
	CONCENTRICITY	.010 DIA
	SYMMETRY	.001 DIA

DWN. BY J.D. Stewart, Jr. DATE 1-25-77
CKD. BY T. McDowell DATE 1-28-77
ANAL. ENGR. J. Hackney DATE 2-1-77
PROJ. ENGR. J.W. Bowden Jr. DATE 2-1-77
APPROVAL

COMBUSTION ENGINEERING, INC. WINDSOR, CONN.

INLET NOZZLE CLADDING AND MACHINING
WESTINGHOUSE ELECTRIC CORP
173" ID PWR

CHATTANOOGA

SIZE D | 12573-128-002 | REV 00

SCALE AS NOTED | CONT 12573 | SHEET

D-12573-128-003

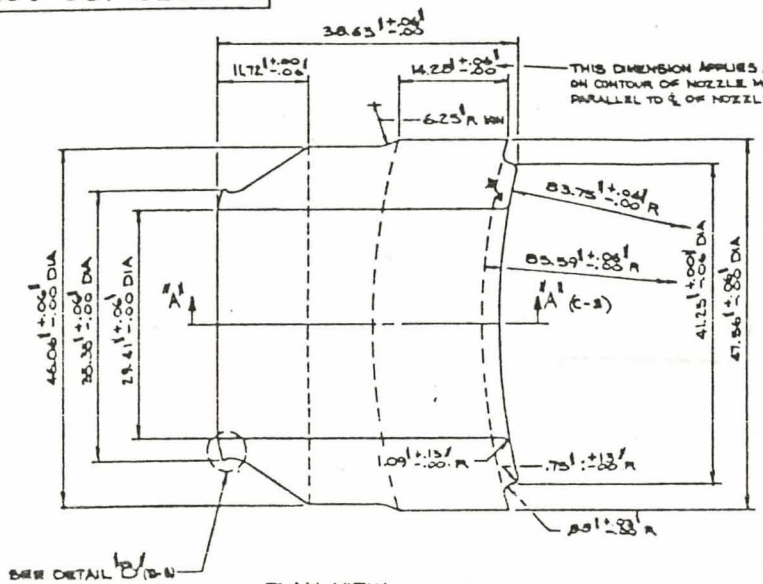

PLAN VIEW

(128-301) OUTLET NOZZLE

SCALE 1.5" = 12"

WEIGHT = 7,651 #

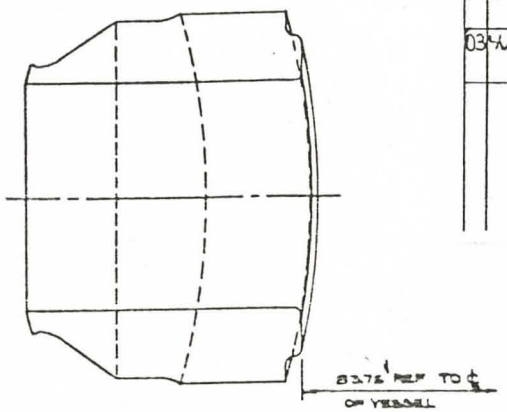

SECTION "A-A" (C-4)

SCALE 1.5" = 12"

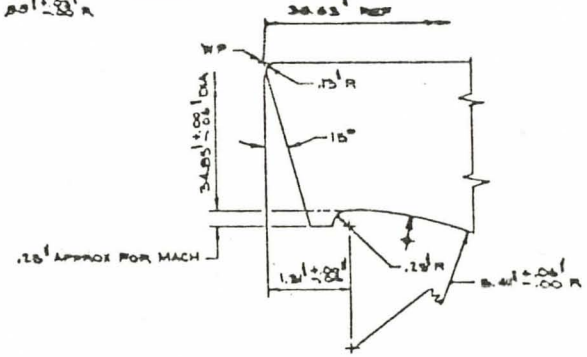

DETAIL "B" (C-4)

SCALE 12" = 12"

MATERIAL NOTES

"A" = AS SUPPLEMENTED BY GE PURCHASE SPECIFICATION N-PS C16(B) AND ADDENDA 2(a), 4(a), 5(a) AND 6(b).

REVISIONS

BY	ZONE	DESCRIPTION	DATE	APPROVED
01	D-6	DIM 83.75 +.04 -.05 R WAS 83.84 +.04 -.88 R	10/10/74	
	D-7	DIM 38.63 +.00 -.05 WAS 39.70 +.00 -.80	8 Sheets	
	B-7	REVISED WEIGHT.	J.L.	
	C-6	ADDED TOL TO .75 R & 1.09 R		
	D-7	DIM 14.28 WAS 14.09 & 6.25 WAS 5.30.		
02	C-6	DIM .80 R WAS 1.09 R	12/27/74 A Sheets	
03	A-M	REVISED MATL SPEC & MATL NOTE "A" ON PC NO. 128-301	9/26/76 A Sheets	

GENERAL NOTES

1. ------ DENOTES GE MACHINING.
2. ←→ DENOTES HIGH STRESS AREA.

REFERENCE DRAWINGS

NO.	TITLE	DRAWING NO.
1	OUTLET NOZZLE CLADDING AND MACHINING	D-12573-128-002

WELD TABLE

UNLESS OTHERWISE SPECIFIED

1. DIMENSIONS & TOLERANCES TO USAS Y14.5 - 1966
2. ALL DIMENSIONS APPLY AT REFERENCE TEMP. OF 68° F.
3. REF. DIMENSIONS ARE FOR INFORMATION ONLY. DO NOT USE FOR FABRICATION.
4. MARKING SYMBOLS V1+VIBRO TOOL L28+FLOW STRESS STAMP .03 MAX. DEPTH
5. BREAK ALL SHARP EDGES WITH APPROX .03 RADIUS OR CHAMFER
6. MACHINED SURFACES: INTERNAL - 250AA OR BETTER EXTERNAL 500AA OR BETTER
7. SIZES IN ℄/M ARE FINISHED SIZES - NO ALLOWANCE MADE FOR FABRICATION OR WELD SHRINKAGE
8. TOLERANCE ON .XX ±.05, .XXX = ±.010, ANGLES ±0°-30'
9. SEE REF. DWG. NO. ___ FOR HOT ITEM NO. IN WELD TABLE & NOT CALL-OUT ON DWG.
10. SEE DWG. ___ FOR APPLICABLE EQUIPMENT SPECIFICATIONS.
11. DOUBLE ARROW INDICATES DIMENSION TO GIVEN REFERENCE LINE.
12. DEVELOPED LENGTH IN ℄/M IS GIVEN ON MEAN CENTERLINE.

WELD NUMBER	B.M.P. NUMBER	NO.	FREQ	NO.	FREQ	NO.	FREQ	NO.	FREQ	APP. CHECK
		PT		MT		PT		MT		

ZONE	ASS'Y NO.	PC NO.	NO. REQ'D	NOMENCLATURE	MATERIAL	MATERIAL SPEC	MATERIAL NOTES
C-8		128-301	4	OUTLET NOZZLE (SEE DETAIL)	ALLOY STL	SA-508 CL 3	"A"

LIST OF MATERIAL - QUANTITIES FOR ONE (1) UNIT, ONE (1) UNIT ON CONTRACT

DIMENSIONING TOLERANCES FOR MACHINED SURFACES UNLESS SPECIFIED ON DRAWING		
DIMENSION	TOL	
LENGTH	.001" IN.	
STRAIGHTNESS	.001" IN.	
ROUNDNESS	SEE DWG	
CYLINDRICITY	SEE DWG	
TAPER/CYL	SEE DWG	
PROFILE OF SURFACE	SEE DWG	
PARALLELISM	.001" IN.	
PERPENDICULARITY	.001" IN.	
ANGULARITY	SEE DWG	
CONCENTRICITY	SEE DWG	
TRUE POSITION	SEE DWG	
CONCENTRICITY	DIA DIA	
SYMMETRY	SEE DWG	

DWN. BY Anthony A Sims DATE 7-12-74

CKD. BY [illegible] DATE 7-16-74

APPROVAL [illegible] DATE 7-16-74

PROJ. ENGR. [illegible] DATE 7-16-74

APPROVAL

COMBUSTION ENGINEERING, INC. WINDSOR, CONN.

OUTLET NOZZLE

WESTINGHOUSE ELECTRIC CORP.

1751D PWR

SIZE D | 12573-128-003 | REV 03

CHATTANOOGA | SCALE AS SHOWN | CONTR 12573 | SHEET

D-12573-128-004

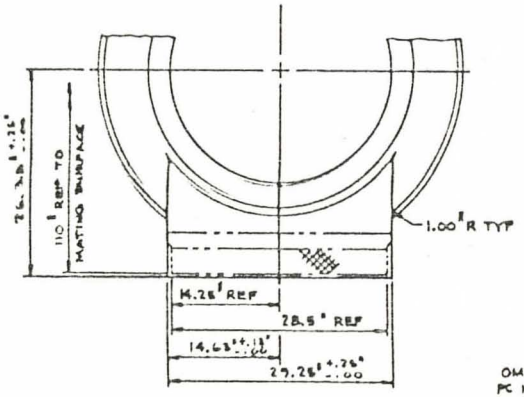

VIEW 'A-A' (B-C)
SCALE 1.5'=12'

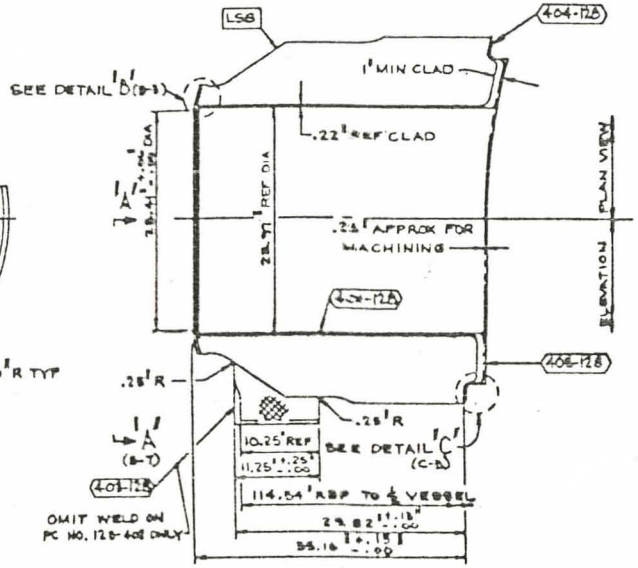

(128-401) OUTLET NOZZLE AS SHOWN

(128-402) OUTLET NOZZLE AS SHOWN AND NOTED

SCALE 1.5'=12'

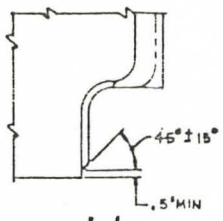

DETAIL 'C' (B-B)
SCALE 6'=12"

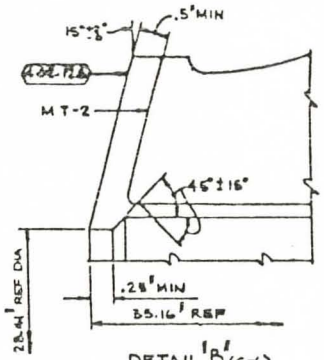

DETAIL 'B' (C-C)
SCALE 12'=12'

WELD NUMBER	DWP NUMBER	NO	FINDS	NO	FINDS	NO.	FINDS	NO.	FINDS	AFT CHORD	B-B		128-402	2	OUTLET NOZZLE			
		PT		MT		ET		UT			BOMB	ASME NO	PC NO	NO REQ'D	NOMENCLATURE	MATERIAL	MATERIAL SPEC	MATERIAL NOTES
405-128	N-DWPS-SMA-3.43-1004-1	8	F					28	F				128-401	2	OUTLET NOZZLE SEE REF DWG NO. 2			
404-128	N-DWPS-SMA-3.8-1004-0	5	F					8	F		B-5							
403-128	N-DWPS-SMA-3.3-1104-1			2	F			26	F									
402-128	N-DWPS-SMA-3.43-1004-1	4	F			1	F	27	F									
401-128	N-DWPS-SAA-3.8-1111-0	3	F					8	F	23								

WELD TABLE

LIST OF MATERIAL - QUANTITIES FOR ONE (1) UNIT, ONE (1) UNIT ON CONTRACT

GENERAL NOTES

1. ALL CLADDING TO BE AS DEPOSITED FINISH UNLESS NOTED AND A MINIMUM THICKNESS OF .13' UNLESS NOTED.

REFERENCE DRAWINGS

NO.	TITLE	DRAWING NUMBER
1	PROCESS SPECIFICATIONS	B-12573-141-002
2	OUTLET NOZZLE	B-12573-128-003
3	UPPER VESSEL ASSEMBLY	E-12573-121-001

UNLESS OTHERWISE SPECIFIED

1. DIMENSIONS & TOLERANCES TO USASI Y14.5 - 1966
2. ALL DIMENSIONS APPLY AT REFERENCE TEMP. OF 68° F.
3. REF. DIMENSIONS ARE FOR INFORMATION ONLY, DO NOT USE FOR FABRICATION.
4. MARKING SYMBOLS VT = VIBRO TOOL, LSB = LOW STRESS STAMP, .03' MAX. DEPTH
5. BREAK ALL SHARP EDGES WITH APPROX. .03' RADIUS OR CHAMFER
6. MACHINED SURFACES INTERNAL - 250AA OR BETTER EXTERNAL-500AA OR BETTER
7. SIZES IN L/H ARE FINISHED SIZES - NO ALLOWANCE MADE FOR FABRICATION OR WELD SHRINKAGE.
8. TOLERANCE ON .X" = ±.1', .XX" = ±.06', .XXX" = ±.010' ANGLES ±0°30'
9. SEE REF. DWG. NO. 1 FOR HOT ITEM NO. IN WELD TABLE & HOT CALL-OUT ON DWG.
10. SEE DWG. E-12573-121-002 FOR APPLICABLE EQUIPMENT SPECIFICATIONS.
11. DOUBLE ARROW INDICATES DIMENSION TO GIVEN REFERENCE LINE.
12. DEVELOPED LENGTH IN L/H IS GIVEN ON MEAN CENTERLINE.

GEOMETRIC TOLERANCES FOR MACHINED SURFACES UNLESS SPECIFIED ON DRAWING

SYM	GEOMETRY	TOL
⏥	FLATNESS	.001/IN
—	STRAIGHTNESS	.001/IN
○	ROUNDNESS	SEE DWG
⌭	CYLINDRICITY	SEE DWG
⌒	PROFILE OF LINE	SEE DWG
⌓	PROFILE OF SURFACE	SEE DWG
//	PARALLELISM	.001/IN
⊥	PERPENDICULARITY	.001/IN
∠	ANGULARITY	SEE DWG
↗	RUNOUT	SEE DWG
⌖	TRUE POSITION	SEE DWG
◎	CONCENTRICITY	.010 DIA
⌯	SYMMETRY	SEE DWG

DWN. BY L.B. Steward, Jr. DATE 1-25-77
CKD. BY T.W. Russell DATE 1-28-77
ANAL. ENGR. L. Williams DATE 2-1-77
PROJ. ENGR. J.W. Rawdon, Jr. DATE 2-2-77
APPROVAL

COMBUSTION ENGINEERING, INC. WINDSOR, CONN.

OUTLET NOZZLE CLADDING AND MACHINING
WESTINGHOUSE ELECTRIC CORP
173"ID PWR

CE CHATTANOOGA | SIZE D | 12573-128-004 | REV 00 | SCALE AS NOTED | CONTR 12573 | SHEET

C-STD11-131-031

REVISIONS				
SYM	ZONE	DESCRIPTION	DATE	APPROVED
01	D-3 & C-3	ADDED "PT ENTIRE PREP."	10/26/76	J. HALLIDAY 10-26-76 W. MANNING 10-26-76

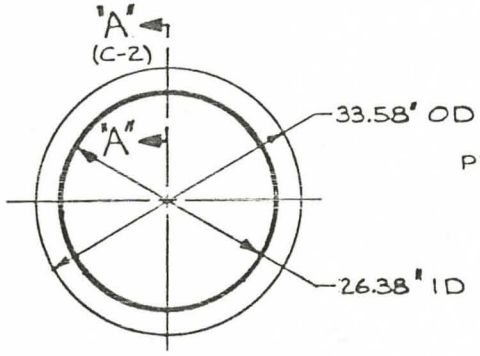

131-3101 INLET NOZZLE SAFE END

SCALE 1"=12"

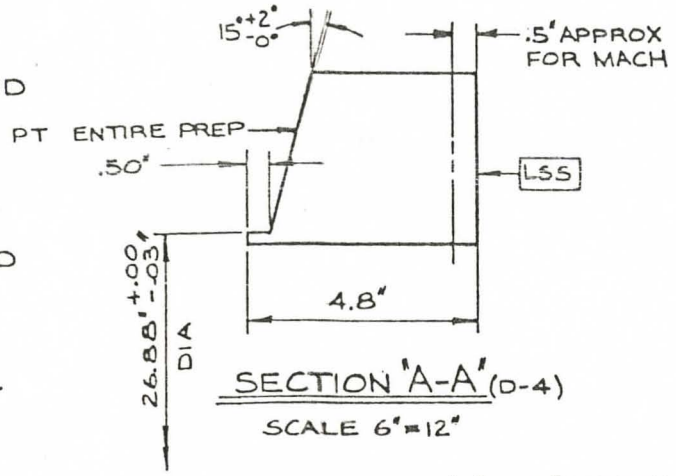

SECTION "A-A" (D-4)

SCALE 6"=12"

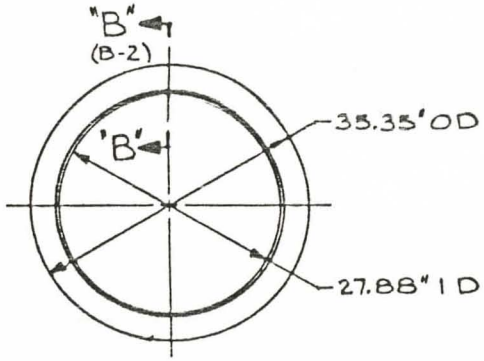

131-3102 OUTLET NOZZLE SAFE END

SCALE 1"=12"

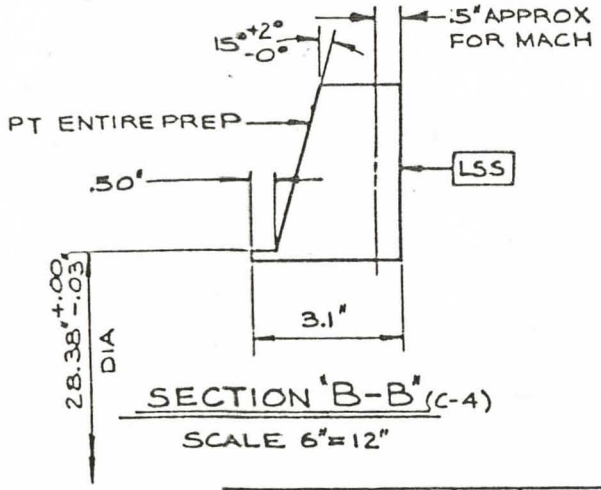

SECTION "B-B" (C-4)

SCALE 6"=12"

ZONE	ASS'Y NO.	PC. NO.	NO. REQ'D	NOMENCLATURE	MATERIAL	MATERIAL SPEC	MATERIAL NOTES
B-4		131-3102	4	OUTLET NOZZLE SAFE END			
C-4		131-3101	4	INLET NOZZLE SAFE END			

LIST OF MATERIAL – QUANTITIES FOR ONE (1) UNIT

WELD NUMBER	D.W.P. NUMBER	PT NO.	PT FREQ.	MT NO.	MT FREQ.	RT NO.	RT FREQ.	UT NO.	UT FREQ.	ΔF/CHEM.

WELD TABLE

UNLESS OTHERWISE SPECIFIED

1. DIMENSIONS & TOLERANCES TO USASI Y14.5 – 1966.
2. ALL DIMENSIONS APPLY AT REFERENCE TEMP. OF 68°F.
3. REF. DIMENSIONS ARE FOR INFORMATION ONLY. DO NOT USE FOR FABRICATION.
4. MARKING SYMBOLS: VT=VIBRO TOOL: LSS=LOW STRESS STAMP .03" MAX DEPTH.
5. BREAK ALL SHARP EDGES WITH APPROX. .03" RADIUS OR CHAMFER.
6. MACHINED SURFACES: INTERNAL – 250AA OR BETTER: EXTERNAL – 500AA OR BETTER
7. SIZES IN L/M ARE FINISHED SIZES – NO ALLOWANCE MADE FOR FABRICATION OR WELD SHRINKAGE.
8. TOLERANCE ON .X"=±.1", .XX=±.06", .XXX=±.010" ANGLES ± 0°30'.
9. SEE REF. DWG. NO. _____ FOR NDT ITEM NO. IN WELD TABLE & NDT CALL-OUT ON DWG.
10. SEE DWG. _____ FOR APPLICABLE EQUIPMENT SPECIFICATIONS.
11. DOUBLE ARROW INDICATES DIMENSION TO GIVEN REFERENCE LINE.
12. DEVELOPED LENGTH IN L/M IS GIVEN ON MEAN CENTERLINE.

GEOMETRIC TOLERANCES FOR MACHINED SURFACES UNLESS SPECIFIED ON DRAWING

SYM.	GEOMETRY	TOL
▱	FLATNESS	001/IN
—	STRAIGHTNESS	001/IN
○	ROUNDNESS	SEE DWG
⌭	CYLINDRICITY	SEE DWG
⌒	PROFILE OF LINE	SEE DWG
⌓	PROFILE OF SURFACE	SEE DWG
//	PARALLELISM	001/IN
⊥	PERPENDICULARITY	001/IN
∠	ANGULARITY	SEE DWG
↗	RUNOUT	SEE DWG
⌖	TRUE POSITION	SEE DWG
◎	CONCENTRICITY	DIO DIA
⌯	SYMMETRY	SEE DWG

APPROVALS

ANAL. ENGR. J. HALLIDAY
DATE 4-30-76
PROJ. ENGR. T.N. FAZIO
DATE 4-30-76

POWER SYSTEMS
COMBUSTION ENGINEERING, INC.

This drawing is the property of C-E Power Systems Combustion Engineering, Inc. Windsor, Connecticut 06095, and is not to be reproduced or used to furnish any information for making of drawings or apparatus except where provided for by agreement with said company.

NOZZLE SAFE ENDS

WESTINGHOUSE ELECTRIC CORP 173" ID PWR

DWN. BY ANTHONY SIMS
DATE APRIL 12, 1976
CKD. BY T. McDOWELL
DATE 4-26-76

C-STD11-131-031-01

SCALE AS NOTED
CONT. STANDARD