Florida Power CORPORATION

CRYSTAL RIVER UNIT NO. 3
REACTOR BUILDING PRESTRESSING SYSTEM
TENDON HISTORY

TENDON IDENTIFICATION NUMBER 12V2 CUT LENGTH 188'-6 1/2

SHOP WASHER ID: PC 121 CR 557 FIELD WASHER ID: PC 120 CR 232

1. GAI/QA vendor inspection cover letter number-FPC # 9957 DATE 2/25/74

2. Date tendon received on-site 1-16-74 RMR Number 36036

3. Date installed in conduit 7-3-74 Installation NCR's

Wires removed 0 Wires replaced 0 Total Ineffective wires 0

4. Date buttonheaded 8-27-74 Buttonheading NCR's

Bad wires 0 Accept. Reheads 0 Total Ineffective wires 0

5. Date stressed 10-14-74 Stressing NCR's

Date restressed Restressing NCR's

	SHOP END	FIELD END	TOTAL
Elongation (1500 psi to 80% ult.)-Pred./Act.	12 1/8 / 12 1/2	N/A, N/A	12 1/4 12 1/2
Lift-Off Pressure - Predicted/Actual	6800 / 7050 PSI	" , "	N/A
Shim Thickness/80% Ultimate Pressure	13" / 7770	4 , "	N/A

Unseated/Broken Wires 0 Total effective wires after stressing 163

6. Date Bulk-filled 10-23-74 Bulk-Filling NCR's

Time since installation 3 3/4 months Inlet Pressure 112 PSI Outlet Temp. 126°

Date end caps refilled: Shop Field

7. Data compiled by D. Vidler Organization Salem

Date 4/1/77

8. Additional Comments:

Florida Power Corporation

CRYSTAL RIVER UNIT NO. 3
REACTOR BUILDING PRESTRESSING SYSTEM
TENDON HISTORY

TENDON IDENTIFICATION NUMBER 34V16 CUT LENGTH 189' - 2 3/4"

SHOP WASHER ID: PC 121 CR 778 FIELD WASHER ID: PC 121 CR 762

1. GAI/QA vendor inspection cover letter number-FPC # 10.010 DATE 3/1/74

2. Date tendon received on-site 2-8-74 RMR Number 36943

3. Date installed in conduit 7-29-74 Installation NCR's

   Wires removed 0 Wires replaced 0 Total Ineffective wires 0

4. Date buttonheaded 10-11-74 Buttonheading NCR's

   Bad wires 2 Accept. Reheads 0 Total Ineffective wires 2

5. Date stressed 10-15-74 Stressing NCR's

   Date restressed Restressing NCR's

	SHOP END	FIELD END	TOTAL
Elongation (1500 psi to 80% ult.)-Pred./Act.	12 1/4 / 11 3/8	NA / NA	12 1/4 / 11 3/8
Lift-Off Pressure - Predicted/Actual	6740 / 6825 psi	" / "	N/A
Shim Thickness/80% Ultimate Pressure	11" / 7680	4" / "	N/A

   Unseated/Broken Wires 0 Total effective wires after stressing 161

6. Date Bulk-filled 11-7-74 Bulk-Filling NCR's 1687

   Time since installation 4 months Inlet Pressure 160 psi Outlet Temp. 134°

   Date end caps refilled: Shop Field

7. Data compiled by R. Waller Organization Salem

   Date 4/1/77

8. Additional Comments:

Florida Power CORPORATION

CRYSTAL RIVER UNIT NO. 3
REACTOR BUILDING PRESTRESSING SYSTEM
TENDON RECORD

TENDON IDENTIFICATION NUMBER 34V17 CUT LENGTH 188'-10 3/4"

SHOP WASHER ID: PC 121 CR 755 FIELD WASHER ID: PC 121 CR 950

1. GAI/QA vendor inspection cover letter number-FPC # 10,010 DATE 3/1/74

2. Date tendon received on-site 2-8-74 RMR Number 36943

3. Date installed in conduit 7-29-74 Installation NCR's

Wires removed 0 Wires replaced 0 Total Ineffective wires 0

4. Date buttonheaded 9-25-74 Buttonheading NCR's

Bad wires 0 Accept. Reheads 0 Total Ineffective wires 0

5. Date stressed 10-11-74 Stressing NCR's

Date restressed Restressing NCR's

	SHOP END	FIELD END	TOTAL
Elongation (1500 psi to 80% ult.)-Pred./Act.	12 1/8 , 11 1/2	NA , NA	12 1/8 , 11 1/2
Lift-Off Pressure - Predicted/Actual	6800 , 6900	" , "	N/A
Shim Thickness/80% Ultimate Pressure	10 3/8 , 7770	4 , "	N/A

Unseated/Broken Wires 0 Total effective wires after stressing 163

6. Date Bulk-filled ~~[illegible]~~ 11-7-74 Bulk-Filling NCR's 1687

Time since installation 4 months Inlet Pressure 145 PSI Outlet Temp. 136°

Date end caps refilled: Shop Field

7. Data compiled by R. Waller Organization Salem

Date 4/1/77

8. Additional Comments:

Florida Power CORPORATION

CRYSTAL RIVER UNIT NO. 3
REACTOR BUILDING PRESTRESSING SYSTEM
TENDON HISTORY

N IDENTIFICATION NUMBER 34V18 CUT LENGTH 188'-5 3/4

SHOP WASHER ID: PC 121 CR 759 FIELD WASHER ID: PC 120 CR 280

1. GAI/QA vendor inspection cover letter number-FPC # 10,010 DATE 3/1/74

2. Date tendon received on-site 2-8-74 RMR Number 36943

3. Date installed in conduit 7-29-74 Installation NCR's

Wires removed 0 Wires replaced 0 Total Ineffective wires 0

4. Date buttonheaded 8-26-74 Buttonheading NCR's

Bad wires 9 Accept. Reheads 9 Total Ineffective wires 0

5. Date stressed 9-18-74 Stressing NCR's

Date restressed Restressing NCR's

	SHOP END	FIELD END	TOTAL
Elongation (1500 psi to 80% ult.)-Pred./Act.	12 5/8 / 12 5/8	NA / NA	12 5/8 / 12 5/8
ift-Off Pressure - Predicted/Actual	676 / 676	" / "	N/A
Shim Thickness/80% Ultimate Pressure	11 3/8 / 17750	4 / "	N/A

Unseated/Broken Wires 0 Total effective wires after stressing 163

6. Date Bulk-filled 11-7-74 Bulk-Filling NCR's 1687

Time since installation 4 months Inlet Pressure 160 PSI Outlet Temp. 138°

Date end caps refilled: Shop Field

7. Data compiled by [illegible] Organization Salem

Date 4/1/77

8. Additional Comments:

Florida Power

CRYSTAL RIVER UNIT NO. 3
REACTOR BUILDING PRESTRESSING SYSTEM
TENDON RECORD

IDENTIFICATION NUMBER 45 V 19 CUT LENGTH 188'-8"

SHOP WASHER ID: PC 121 CR 877 FIELD WASHER ID: PC 120 CR 185

1. GAI/QA vendor inspection cover letter number-FPC # 10043 DATE 3/8/74

2. Date tendon received on-site 2-18-74 RMR Number 37022

3. Date installed in conduit 7-25-74 Installation NCR's

Wires removed 0 Wires replaced 0 Total Ineffective wires 0

4. Date buttonheaded 8-9-74 Buttonheading NCR's

Bad wires 0 Accept. Reheads 0 Total Ineffective wires 0

5. Date stressed 9-19-74 Stressing NCR's

Date restressed Restressing NCR's

	SHOP END	FIELD END	TOTAL
Elongation (1500 psi to 80% ult.)-Pred./Act.	11 3/4 / 12 3/8	NA, NA	11 3/4 / 12 3/8
ft-Off Pressure - Predicted/Actual	6810 / 6750	" / "	N/A
Shim Thickness/80% Ultimate Pressure	12 3/8 / 17780	4" / "	N/A

Unseated/Broken Wires 0 Total effective wires after stressing 163

6. Date Bulk-filled 11-7-74 Bulk-Filling NCR's 1687

Time since installation 4 months Inlet Pressure 150 PSI Outlet Temp. 140°

Date end caps refilled: Shop Field

7. Data compiled by D Walls Organization Sales

Date 4/1/77

8. Additional Comments:

Florida Power

CRYSTAL RIVER UNIT NO. 3
REACTOR BUILDING PRESTRESSING SYSTEM
TENDON HISTORY

IDENTIFICATION NUMBER 45V20 CUT LENGTH 188'-7

SHOP WASHER ID: PC 121 CR 877 FIELD WASHER ID: PC 120 CR 260

1. GAI/QA vendor inspection cover letter number-FPC # 10043 DATE 3/8/74

2. Date tendon received on-site 2-18-74 RMR Number 37022

3. Date installed in conduit 7-25-74 Installation NCR's

Wires removed 0 Wires replaced 0 Total Ineffective wires 0

4. Date buttonheaded 9-4-74 Buttonheading NCR's

Bad wires 2 Accept. Reheads 0 Total Ineffective wires 2

5. Date stressed 10-4-74 Stressing NCR's

Date restressed Restressing NCR's

	SHOP END	FIELD END	TOTAL
Elongation (1500 psi to 80% ult.)-Pred./Act.	11 3/4, 12 3/8	NA, NA	11 3/4, 12 3/8
Lift-Off Pressure - Predicted/Actual	6810, 6750	" , "	N/A
Shim Thickness/80% Ultimate Pressure	12 3/8, 7780	4", "	N/A

Unseated/Broken Wires 0 Total effective wires after stressing 163

6. Date Bulk-filled 11-7-74 Bulk-Filling NCR's 1687

Time since installation 4 months Inlet Pressure 151 psi Outlet Temp. 120°

Date end caps refilled: Shop Field

7. Data compiled by D. Nalle Organization Sargent

Date 4/1/77

8. Additional Comments:

Calculation S07-0033
Revision 0
Attachment 2
Page 146 of 325

Florida Power CORPORATION

CRYSTAL RIVER UNIT NO. 3
REACTOR BUILDING PRESTRESSING SYSTEM
TENDON HISTORY

TENDON IDENTIFICATION NUMBER 45 V 20 CUT LENGTH _____

SHOP WASHER ID: PC _____ CR _____ FIELD WASHER ID: PC _____ CR _____

1. GAI/QA vendor inspection cover letter number-FPC # _____ DATE _____

2. Date tendon received on-site _____ RMR Number _____

3. Date installed in conduit _____ Installation NCR's _____

   Wires removed _____ Wires replaced _____ Total Ineffective wires _____

4. Date buttonheaded _____ Buttonheading NCR's _____

   Bad wires _____ Accept. Reheads _____ Total Ineffective wires _____

5. Date stressed _____ Stressing NCR's _____

   Date restressed _____ Restressing NCR's _____

	SHOP END	FIELD END	TOTAL
Elongation (1500 psi to 80% ult.)-Pred./Act.	/	/	/
Lift-Off Pressure - Predicted/Actual	/	/	N/A
Shim Thickness/80% Ultimate Pressure	/	/	N/A

   Unseated/Broken Wires _____ Total effective wires after stressing 161

6. Date Bulk-filled _____ Bulk-Filling NCR's _____

   Time since installation _____ Inlet Pressure _____ Outlet Temp. _____

   Date end caps refilled: Shop _____ Field _____

7. Data compiled by D.J. Giffin Organization FPC

   Date 6-1-78

8. Additional Comments: BASED ON PRESCON-CONESCO FINAL CONSTRUCTION EFFECTIVE WIRE SUMMARY - TOTAL EFFECTIVE WIRES REDUCED. CONESCO DATA CONFIRMED IN QUALITY RECORDS.

Florida Power

CRYSTAL RIVER UNIT NO. 3
REACTOR BUILDING PRESTRESSING SYSTEM
TENDON FILE BOX

T. . IDENTIFICATION NUMBER 45V21 CUT LENGTH 188'-8"

SHOP WASHER ID: PC 121 CR 703 FIELD WASHER ID: PC 120 CR 193

1. GAI/OA vendor inspection cover letter number-FPC # 10050 DATE 3/8/74

2. Date tendon received on-site 2-20-74 RMR Number 37257

3. Date installed in conduit 7-25-74 Installation NCR's

   Wires removed 0 Wires replaced 0 Total Ineffective wires 0

4. Date buttonheaded 8-9-74 Buttonheading NCR's

   Bad wires 0 Accept. Reheads 0 Total Ineffective wires 0

5. Date stressed 11-11-74 Stressing NCR's

   Date restressed Restressing NCR's

	SHOP END	FIELD END	TOTAL
Elongation (1500 psi to 80% ult.)-Pred./Act.	11 3/4, 11 3/4	NA, NA	11 3/4, 11 3/4
.ft-Off Pressure - Predicted/Actual	6800, 6800	" , "	N/A
Shim Thickness/80% Ultimate Pressure	13 3/16, 7770	4, "	N/A

Unseated/Broken Wires 1 Total effective wires after stressing 162

6. Date Bulk-filled 11-30-75 Bulk-Filling NCR's

   Time since installation 4 months Inlet Pressure 125 105 Outlet Temp. 118°

   Date end caps refilled: Shop Field

7. Data compiled by D. Whitlock Organization Salem

   Date 4/1/77

8. Additional Comments:

Calculation S07-0033
Revision 0
Attachment 2
Page 148 of 325

Florida Power Corporation

CRYSTAL RIVER UNIT NO. 3
REACTOR BUILDING PRESTRESSING SYSTEM
TENDON HISTORY

TENDON IDENTIFICATION NUMBER 61 V 16 CUT LENGTH 189'-0"

SHOP WASHER ID: PC 121 CR 947 FIELD WASHER ID: PC 120 CR 269

- GAI/QA vendor inspection cover letter number-FPC # 10142 DATE 3/22/74
- Date tendon received on-site 3-6-74 RMR Number 37528
- Date installed in conduit 7-12-74 Installation NCR's
  Wires removed 0 Wires replaced 0 Total Ineffective wires 0
- Date buttonheaded 9-9-74 Buttonheading NCR's
  Bad wires 0 Accept. Reheads 0 Total Ineffective wires 0
- Date stressed 10-11-74 Stressing NCR's
  Date restressed Restressing NCR's

	SHOP END	FIELD END	TOTAL
Elongation (1500 psi to 80% ult.)-Pred./Act.	12 1/4 / 12 3/4	NA / NA	12 1/4 / 12 3/4
Lift-Off Pressure - Predicted/Actual	6870 / 6825 PSI	" / "	N/A
Shim Thickness/80% Ultimate Pressure	13" / 7810	4" / "	N/A

Unseated/Broken Wires 0 Total effective wires after stressing 163

- Date Bulk-filled 10-25-74 Bulk-Filling NCR's
  Time since installation 3 months Inlet Pressure 114 PSI Outlet Temp. 120°
  Date end caps refilled: Shop Field
- Data compiled by D. Muller Organization Salem
  Date 4/4/77
- Additional Comments:

Florida Power Corporation

CRYSTAL RIVER UNIT NO. 3
REACTOR BUILDING PRESTRESSING SYSTEM
TENDON HISTORY

TENDON IDENTIFICATION NUMBER 61 V 17 CUT LENGTH 188' - 9 1/4"

SHOP WASHER ID: PC 121 CR 943 FIELD WASHER ID: PC 120 CR 256

- GAI/QA vendor inspection cover letter number-FPC # 10142 DATE 3/22/74
- Date tendon received on-site 3-6-74 RMR Number 37528
- Date installed in conduit 7-16-74 Installation NCR's
  Wires removed 0 Wires replaced 0 Total Ineffective wires 0
- Date buttonheaded 8-12-74 Buttonheading NCR's
  Bad wires 4 Accept. Reheads 4 Total Ineffective wires 0
- Date stressed 9-16-74 Stressing NCR's
  Date restressed Restressing NCR's

	SHOP END	FIELD END	TOTAL
Elongation (1500 psi to 80% ult.)-Pred./Act.	12" / 11 3/4"	NA / NA	12" / 11 3/4"
Lift-Off Pressure - Predicted/Actual	6870 / 6900 PSI	" / "	N/A
Shim Thickness/80% Ultimate Pressure	12" / 7810	4" / "	N/A

Unseated/Broken Wires 0 Total effective wires after stressing 163

- Date Bulk-filled 10-29-74 Bulk-Filling NCR's
  Time since installation 3 months Inlet Pressure 114 PSI Outlet Temp. 116°
  Date end caps refilled: Shop Field
- Data compiled by D. Walker Organization Salem
  Date 4/4/77
- Additional Comments:

Florida Power CORPORATION

CRYSTAL RIVER UNIT NO. 3
REACTOR BUILDING PRESTRESSING SYSTEM
TENDON HISTORY

TENDON IDENTIFICATION NUMBER 61 V 17 CUT LENGTH _____

SHOP WASHER ID: PC _____ CR _____ FIELD WASHER ID: PC _____ CR _____

1. GAI/QA vendor inspection cover letter number-FPC # _____ DATE _____

2. Date tendon received on-site _____ RMR Number _____

3. Date installed in conduit _____ Installation NCR's _____

   Wires removed _____ Wires replaced _____ Total Ineffective wires _____

4. Date buttonheaded _____ Buttonheading NCR's _____

   Bad wires _____ Accept. Reheads _____ Total Ineffective wires _____

5. Date stressed _____ Stressing NCR's _____

   Date restressed _____ Restressing NCR's _____

	SHOP END	FIELD END	TOTAL
Elongation (1500 psi to 80% ult.)-Pred./Act.	/	/	/
Lift-Off Pressure - Predicted/Actual	/	/	N/A
Shim Thickness/80% Ultimate Pressure	/	/	N/A

   Unseated/Broken Wires _____ Total effective wires after stressing 162

6. Date Bulk-filled _____ Bulk-Filling NCR's _____

   Time since installation _____ Inlet Pressure _____ Outlet Temp. _____

   Date end caps refilled: Shop _____ Field _____

7. Data compiled by D. F. Giffin Organization FPC

   Date 6-1-78

8. Additional Comments: TOTAL EFFECTIVE WIRES REDUCED BASED ON PRESCON - CONESCO FINAL CONSTRUCTION EFFECTIVE WIRE SUMMARY AND QUALITY RECORDS.

Florida Power Corporation

CRYSTAL RIVER UNIT NO. 3
REACTOR BUILDING PRESTRESSING SYSTEM
TENDON HISTORY

IDENTIFICATION NUMBER 61V18 CUT LENGTH 188'-8 1/4"

TOP WASHER ID: PC 121 CR 951 FIELD WASHER ID: PC 120 CR 213

- GAI/QA vendor inspection cover letter number-FPC # 10142 DATE 3/22/74
- Date tendon received on-site 3-8-74 RMR Number 37539
- Date installed in conduit 7-16-74 Installation NCR's
  Wires removed 0 Wires replaced 0 Total Ineffective wires 0
- Date buttonheaded 9-9-74 Buttonheading NCR's
  Bad wires 0 Accept. Reheads 0 Total Ineffective wires 0
- Date stressed 10-11-74 Stressing NCR's
  Date restressed Restressing NCR's

	SHOP END	FIELD END	TOTAL
Elongation (1500 psi to 80% ult.)-Pred./Act.	11 3/4, 11 1/2	NA, NA	11 3/4, 11 1/2
Lift-Off Pressure - Predicted/Actual	6870, 6700 PSI	" , "	N/A
Shim Thickness/80% Ultimate Pressure	13", 7810	4 , "	N/A

Unseated/Broken Wires 0 Total effective wires after stressing 163

- Date Bulk-filled 10-29-74 Bulk-Filling NCR's
  Time since installation 3 months Inlet Pressure 114 PSI Outlet Temp. 135°
  Date end caps refilled: Shop Field
- Data compiled by D. Wall Organization Salem
  Date 4/4/77
- Additional Comments:

Florida Power CORPORATION

CRYSTAL RIVER UNIT NO. 3
REACTOR BUILDING PRESTRESSING SYSTEM
TENDON HISTORY

TENDON IDENTIFICATION NUMBER 13 H 35 CUT LENGTH 155'-7 1/2

SHOP WASHER ID: PC 121 CR 510 FIELD WASHER ID: PC 122 CR 1158

1. GAI/QA vendor inspection cover letter number-FPC # 9862 DATE 2/12/74

2. Date tendon received on-site 12-12-73 RMR Number 35157

3. Date installed in conduit 3-19-74 Installation NCR's

Wires removed 0 Wires replaced 0 Total Ineffective wires 0

4. Date buttonheaded 7-29-74 Buttonheading NCR's

Bad wires 2 Accept. Reheads 0 Total Ineffective wires 2

5. Date stressed 1-6-75 Stressing NCR's

Date restressed Restressing NCR's

	SHOP END	FIELD END	TOTAL
Elongation (1500 psi to 80% ult.)-Pred./Act.	5 1/8 / 5 1/8	5 1/8 / 4 7/8	10 1/4 / 10
Lift-Off Pressure - Predicted/Actual	6680 / 6650	6670 / 6800	N/A
Shim Thickness/80% Ultimate Pressure	6 9/16 / 7650	6 3/8 / 7600	N/A

Unseated/Broken Wires 0 Total effective wires after stressing 161

6. Date Bulk-filled 8-27-74 Bulk-Filling NCR's

Time since installation 5 months Inlet Pressure 14 PSI Outlet Temp. 146°

Date end caps refilled: Shop Field

7. Data compiled by P. Waller Organization Salem

Date 4/4/77

8. Additional Comments:

Florida Power CORPORATION

CRYSTAL RIVER UNIT NO. 3
REACTOR BUILDING PRESTRESSING SYSTEM
TENDON HISTORY

TENDON IDENTIFICATION NUMBER 13H36 CUT LENGTH 155'-9"

SHOP WASHER ID: PC 121 CR 618 FIELD WASHER ID: PC 122 CR 1167

1. GAI/QA vendor inspection cover letter number-FPC # 9862 DATE 2/12/74

2. Date tendon received on-site 12-12-73 RMR Number 35157

3. Date installed in conduit 3-19-74 Installation NCR's

   Wires removed 0 Wires replaced 0 Total Ineffective wires 0

4. Date buttonheaded 7-29-74 Buttonheading NCR's

   Bad wires 3 Accept. Reheads 0 Total Ineffective wires 3

5. Date stressed 3-12-75 Stressing NCR's

   Date restressed Restressing NCR's

	SHOP END	FIELD END	TOTAL
Elongation (1500 psi to 80% ult.)-Pred./Act.	5 1/8 / 4 3/8	5 1/8 / 5 1/8	10 1/4 / 10
Lift-Off Pressure - Predicted/Actual	6660 / 6700	6700 / 7000	N/A
Shim Thickness/80% Ultimate Pressure	6 1/4 / 7600	7 / 7650	N/A

Unseated/Broken Wires 0 Total effective wires after stressing 160

6. Date Bulk-filled 8-29-74 Bulk-Filling NCR's

   Time since installation 5 months Inlet Pressure 14 PSI Outlet Temp. 146°

   Date end caps refilled: Shop Field

7. Data compiled by P. Walla Organization Salem

   Date 4/4/77

8. Additional Comments:

Florida Power CORPORATION

CRYSTAL RIVER UNIT NO. 3
REACTOR BUILDING PRESTRESSING SYSTEM
TENDON HISTORY

TENDON IDENTIFICATION NUMBER 13H37 CUT LENGTH 155'-7 1/4

SHOP WASHER ID: PC N/A CR 509 FIELD WASHER ID: PC 122 CR 1272

1. GAI/QA vendor inspection cover letter number-FPC # 9861 DATE 2/12/74

2. Date tendon received on-site 12-18-73 RMR Number 35449

3. Date installed in conduit 3-18-74 Installation NCR's

Wires removed 0 Wires replaced 0 Total Ineffective wires 0

4. Date buttonheaded 7-30-74 Buttonheading NCR's

Bad wires 1 Accept. Reheads 0 Total Ineffective wires 1

5. Date stressed 1-3-75 Stressing NCR's

Date restressed Restressing NCR's

	SHOP END	FIELD END	TOTAL
Elongation (1500 psi to 80% ult.)-Pred./Act.	5 1/8 , 5 1/2	5 1/8 , 4 7/8	10 1/4 , 10 3/8
Lift-Off Pressure - Predicted/Actual	6720 , 6700	6730 , 6750	N/A
Shim Thickness/80% Ultimate Pressure	6 13/16 , 7700	5 3/8 , 7640	N/A

Unseated/Broken Wires 0 Total effective wires after stressing 162

6. Date Bulk-filled 8-29-75 Bulk-Filling NCR's

Time since installation 5 months Inlet Pressure 15 psi Outlet Temp. 148°

Date end caps refilled: Shop Field

7. Data compiled by D. Waller Organization Salem

Date 4/4/77

8. Additional Comments:

Florida Power CORPORATION

CRYSTAL RIVER UNIT NO. 3
REACTOR BUILDING PRESTRESSING SYSTEM
TENDON HISTORY

TENDON IDENTIFICATION NUMBER 13 H37 CUT LENGTH _____

SHOP WASHER ID: PC 121 CR _____ FIELD WASHER ID: PC _____ CR _____

1. GAI/QA vendor inspection cover letter number-FPC # _____ DATE _____

2. Date tendon received on-site _____ RMR Number _____

3. Date installed in conduit _____ Installation NCR's _____

   Wires removed _____ Wires replaced _____ Total Ineffective wires _____

4. Date buttonheaded _____ Buttonheading NCR's _____

   Bad wires _____ Accept. Reheads _____ Total Ineffective wires _____

5. Date stressed _____ Stressing NCR's _____

   Date restressed _____ Restressing NCR's _____

	SHOP END	FIELD END	TOTAL
Elongation (1500 psi to 80% ult.)-Pred./Act.	/	/	/
Lift-Off Pressure - Predicted/Actual	/	/	N/A
Shim Thickness/80% Ultimate Pressure	/	/	N/A

   Unseated/Broken Wires _____ Total effective wires after stressing _____

6. Date Bulk-filled _____ Bulk-Filling NCR's _____

   Time since installation _____ Inlet Pressure _____ Outlet Temp. _____

   Date end caps refilled: Shop _____ Field _____

7. Data compiled by D. F. Giffin Organization FPC

   Date 9-30-77

8. Additional Comments: IN PREPARATION OF 1ST SURVEILLANCE

1ST SURVEILLANCE

Florida Power CORPORATION

CRYSTAL RIVER UNIT NO. 3
REACTOR BUILDING PRESTRESSING SYSTEM
TENDON HISTORY

TENDON IDENTIFICATION NUMBER 13 H 37 CUT LENGTH _____

SHOP WASHER ID: PC _____ CR _____ FIELD WASHER ID: PC _____ CR _____

1. GAI/QA vendor inspection cover letter number-FPC # _____ DATE _____

2. Date tendon received on-site _____ RMR Number _____

3. Date installed in conduit _____ Installation NCR's _____

   Wires removed _____ Wires replaced _____ Total Ineffective wires _____

4. Date buttonheaded _____ Buttonheading NCR's _____

   Bad wires _____ Accept. Reheads _____ Total Ineffective wires _____

5. Date stressed _____ Stressing NCR's _____

   Date restressed _____ Restressing NCR's _____

	SHOP END	FIELD END	TOTAL
Elongation (1500 psi to 80% ult.)-Pred./Act.	1	1	1
Lift-Off ~~Pressure~~ FORCE - Predicted/Actual (KIPS)	1425.6 / 1557	1425.6 / 1654	N/A
LOCK-OFF FORCE BELOW			
Shim Thickness/80% Ultimate Pressure	1	5 3/4"	N/A

Unseated/Broken Wires 1 - PREVIOUS 0 - NEW @ SURV. Total effective wires after stressing 162

6. Date Bulk-filled _____ Bulk-Filling NCR's _____

   Time since installation _____ Inlet Pressure _____ Outlet Temp. _____

   Date end caps refilled: Shop 2-9-78 Field 2-9-78

7. Data compiled by D. I. Giffin Organization FPC

   Date 5-16-78

8. Additional Comments: INSPECTED FIRST SURVEILLANCE (2-2-78)

1) MINOR FIELD RUST ON FIELD STRESSING WASHER; HOWEVER, STILL COAR CAT. #1

2) LOCK-OFF FORCE (SHOP - SAME AS LIFT-OFF; Field - 1611 K)

3) NO CRACKING INDICATION AT ANCHORAGES

4) Field Shims - RECORDS SHOW (5 7/8") - ACTUAL (5 3/4")

CRYSTAL RIVER UNIT NO. 3
REACTOR BUILDING PRESTRESSING SYSTEM
TENDON SURVEILLANCE RECORD

TENDON NO. 13H37

Inspection Period and Date	Location	LIFT OFF CONDITION Force (kips)	Avg. Force (kips)	Shim Thickness (in)	Elong-ation (in)	Total Effective Wires	RETENSIONING Force (kips)	Avg. Force (kips)	Shim Thickness (in)	Elong-ation (in)	Total Effective Wires	Reactor Bldg. Temperature °F Int.	Ext.	Comments
1	2	3	4	5	6	7	8	9	10	11	12	13	14	15
Original Stressing	S-1	1624		6 13/16	5 1/2		N/A		N/A	N/A				
7-30-74	F-3	1634	1629	5 3/8	4 7/8	162	N/A	N/A	N/A	N/A	N/A	N/A	N/A	
1st	S-1	1557		6 13/16	N/A		1557		6 13/16	N/A				
2-2-78	F-3	1654	1606	5 3/4	N/A	162	1611	1584	5 3/4	N/A	162	95	57	

Florida Power CORPORATION

CRYSTAL RIVER UNIT NO. 3
REACTOR BUILDING PRESTRESSING SYSTEM
TENDON HISTORY

TENDON IDENTIFICATION NUMBER 4-2H45 CUT LENGTH 155'-7

SHOP WASHER ID: PC 121 CR 566 FIELD WASHER ID: PC 122 CR 1194

1. GAI/QA vendor inspection cover letter number-FPC # 9957 DATE 2/25/74

2. Date tendon received on-site 1-16-74 RMR Number 36035

3. Date installed in conduit 1-21-74 Installation NCR's

   Wires removed 0 Wires replaced 0 Total Ineffective wires 0

4. Date buttonheaded 7-10-74 Buttonheading NCR's

   Bad wires 0 Accept. Reheads 0 Total Ineffective wires 0

5. Date stressed 2-20-75 Stressing NCR's

   Date restressed Restressing NCR's

	SHOP END	FIELD END	TOTAL
Elongation (1500 psi to 80% ult.)-Pred./Act.	5 1/8, 5 7/16	5 1/8, 5	10 1/4, 10 7/16
Lift-Off Pressure - Predicted/Actual	6870, 7000	6810, 6900	N/A
Shim Thickness/80% Ultimate Pressure	7 1/4, 7810	6 3/8, 7780	N/A

   Unseated/Broken Wires 0 Total effective wires after stressing 163

6. Date Bulk-filled 7-31-74 Bulk-Filling NCR's

   Time since installation 6 months Inlet Pressure 12 psi Outlet Temp. 140°

   Date end caps refilled: Shop Field

7. Data compiled by D. Walla Organization Salem

   Date 4/4/77

8. Additional Comments:

SHEET 140

Florida Power CORPORATION

CRYSTAL RIVER UNIT NO. 3
REACTOR BUILDING PRESTRESSING SYSTEM
TENDON HISTORY

TENDON IDENTIFICATION NUMBER 42 H 46 CUT LENGTH 155'-5 3/4

SHOP WASHER ID: PC 121 CR 529 FIELD WASHER ID: PC 122 CR 117

1. GAI/QA vendor inspection cover letter number-FPC # 9957 DATE 2/23

2. Date tendon received on-site 1-16-74 RMR Number 36035

3. Date installed in conduit 1-22-74 Installation NCR's

   Wires removed 0 Wires replaced 0 Total Ineffective wires 0

4. Date buttonheaded 7-10-74 Buttonheading NCR's

   Bad wires 0 Accept. Reheads 0 Total Ineffective wires 0

5. Date stressed 2-26-75 Stressing NCR's

   Date restressed Restressing NCR's

	SHOP END	FIELD END	TOTAL
Elongation (1500 psi to 80% ult.)-Pred./Act.	5 1/8 / 5 5/8	5 1/8 / 5 1/8	10 1/4 / 10
Lift-Off Pressure - Predicted/Actual	6870 / 6850	6790 / 6850	N/A
Shim Thickness/80% Ultimate Pressure	6 / 7810	5 3/8 / 7750	N/A

Unseated/Broken Wires 0 Total effective wires after stressing 163

6. Date Bulk-filled 7-31-74 Bulk-Filling NCR's

   Time since installation 6 months Inlet Pressure 14 PSI Outlet Temp. 140°

   Date end caps refilled: Shop Field

7. Data compiled by D. Waller Organization Salem

   Date 4/4/77

8. Additional Comments:

SHEET 141 C

Florida Power CORPORATION

CRYSTAL RIVER UNIT NO. 3
REACTOR BUILDING PRESTRESSING SYSTEM
TENDON HISTORY

TENDON IDENTIFICATION NUMBER 42H47 CUT LENGTH 155'-6 1/2

SHOP WASHER ID: PC 121 CR 561 FIELD WASHER ID: PC 122 CR 1144

1. GAI/QA vendor inspection cover letter number-FPC # 9957 DATE 2/25.

2. Date tendon received on-site 1-16-74 RMR Number 36035

3. Date installed in conduit 1-22-74 Installation NCR's _____

   Wires removed 0 Wires replaced 0 Total Ineffective wires 0

4. Date buttonheaded 7-11-74 Buttonheading NCR's _____

   Bad wires 3 Accept. Reheads 0 Total Ineffective wires 3

5. Date stressed 2-25-75 Stressing NCR's _____

   Date restressed _____ Restressing NCR's _____

	SHOP END	FIELD END	TOTAL
Elongation (1500 psi to 80% ult.)-Pred./Act.	5 1/8 / 5 1/8	5 1/8 / 5 1/8	10 1/4 / 10 1/4
Lift-Off Pressure - Predicted/Actual	6750 / 6700	6700 / 6800	N/A
Shim Thickness/80% Ultimate Pressure	6 3/8 / 7680	6 3/8 / 7630	N/A

   Unseated/Broken Wires 0 Total effective wires after stressing 160

6. Date Bulk-filled 8-9-74 Bulk-Filling NCR's _____

   Time since installation 7 months Inlet Pressure 25 psi Outlet Temp. 152°

   Date end caps refilled: Shop _____ Field _____

7. Data compiled by D. Waller Organization Salem

   Date 4/4/77

8. Additional Comments: _____

Florida Power CORPORATION

CRYSTAL RIVER UNIT NO. 3
REACTOR BUILDING PRESTRESSING SYSTEM
TENDON HISTORY

TENDON IDENTIFICATION NUMBER 46H6 CUT LENGTH 155'-8 3/4

SHOP WASHER ID: PC 120 CR 341 FIELD WASHER ID: PC 121 CR 1078

1. GAI/QA vendor inspection cover letter number-FPC # 8964 DATE 9/19/73

2. Date tendon received on-site 9-10-73 RMR Number 32632

3. Date installed in conduit 4-18-74 Installation NCR's

   Wires removed 0 Wires replaced 0 Total Ineffective wires 0

4. Date buttonheaded 10-29-74 Buttonheading NCR's

   Bad wires 0 Accept. Reheads 0 Total Ineffective wires 0

5. Date stressed 3-7-75 Stressing NCR's

   Date restressed Restressing NCR's

	SHOP END	FIELD END	TOTAL
Elongation (1500 psi to 80% ult.)-Pred./Act.	5 3/4 / 5 1/2	4 1/4 / 4 3/4	10 / 10 1/4
Lift-Off Pressure - Predicted/Actual	6760 / 6750	6730 / 6650	N/A
Shim Thickness/80% Ultimate Pressure	6 5/8 / 7750	6 / 7660	N/A

   Unseated/Broken Wires 0 Total effective wires after stressing 163

6. Date Bulk-filled 11-4-74 Bulk-Filling NCR's

   Time since installation 6 1/2 months Inlet Pressure 50 psi Outlet Temp. 142°

   Date end caps refilled: Shop 4-14-75 Field 4-14-75

7. Data compiled by D. Waller Organization Salem

   Date 4/4/77

8. Additional Comments:

Florida Power CORPORATION

CRYSTAL RIVER UNIT NO. 3
REACTOR BUILDING PRESTRESSING SYSTEM
TENDON HISTORY

TENDON IDENTIFICATION NUMBER 46H7 CUT LENGTH 155'-10"

SHOP WASHER ID: PC 121 CR 376 FIELD WASHER ID: PC 121 CR 747

1. GAI/QA vendor inspection cover letter number-FPC # 8964 DATE 9/19/73

2. Date tendon received on-site 9-10-73 RMR Number 32632

3. Date installed in conduit 4-18-74 Installation NCR's

   Wires removed 0 Wires replaced 0 Total Ineffective wires 0

4. Date buttonheaded 10-29-74 Buttonheading NCR's

   Bad wires 0 Accept. Reheads 0 Total Ineffective wires 0

5. Date stressed 1-31-75 Stressing NCR's

   Date restressed Restressing NCR's

	SHOP END	FIELD END	TOTAL
Elongation (1500 psi to 80% ult.)-Pred./Act.	5 1/8 / 5 1/4	5 1/8 / 5	10 1/4 / 10 1/4
Lift-Off Pressure - Predicted/Actual	6760 / 6800	6710 / 6700	N/A
Shim Thickness/80% Ultimate Pressure	7 5/8 / 7750	6 5/8 / 7660	N/A

   Unseated/Broken Wires 0 Total effective wires after stressing 163

6. Date Bulk-filled 11-4-74 Bulk-Filling NCR's

   Time since installation 6½ months Inlet Pressure 55 psi Outlet Temp. 140°

   Date end caps refilled: Shop 4-14-75 Field 4-14-75

7. Data compiled by D. Waller Organization Salem

   Date 4/4/77

8. Additional Comments:

Florida Power CORPORATION

CRYSTAL RIVER UNIT NO. 3
REACTOR BUILDING PRESTRESSING SYSTEM
TENDON HISTORY

TENDON IDENTIFICATION NUMBER 46H8 CUT LENGTH 155'-9"

SHOP WASHER ID: PC 121 CR 396 FIELD WASHER ID: PC 121 CR 902

1. GAI/QA vendor inspection cover letter number-FPC # 8964 DATE 9/14/73

2. Date tendon received on-site 9-10-73 RMR Number 32632

3. Date installed in conduit 4-18-74 Installation NCR's

   Wires removed 0 Wires replaced 0 Total Ineffective wires 0

4. Date buttonheaded 10-29-74 Buttonheading NCR's

   Bad wires 0 Accept. Reheads 0 Total Ineffective wires 0

5. Date stressed 3-7-75 Stressing NCR's

   Date restressed Restressing NCR's

	SHOP END	FIELD END	TOTAL
Elongation (1500 psi to 80% ult.)-Pred./Act.	5 1/8 / 5 7/8	5 1/8 / 4 3/4	10 1/4 / 10 5/8
Lift-Off Pressure - Predicted/Actual	6760 / 6750	6730 / 6800	N/A
Shim Thickness/80% Ultimate Pressure	7 7/16 / 7750	6 1/4 / 7660	N/A

   Unseated/Broken Wires 1 Total effective wires after stressing 162

6. Date Bulk-filled 11-4-74 Bulk-Filling NCR's

   Time since installation 6½ months Inlet Pressure 55 psi Outlet Temp. 148°

   Date end caps refilled: Shop 4-14-75 Field 4-14-75

7. Data compiled by D. Walker Organization Salem

   Date 4/4/77

8. Additional Comments:

Florida Power CORPORATION

CRYSTAL RIVER UNIT NO. 3
REACTOR BUILDING PRESTRESSING SYSTEM
TENDON HISTORY

TENDON IDENTIFICATION NUMBER 46H20 CUT LENGTH 155'-11 1/4

SHOP WASHER ID: PC 120 CR 78 FIELD WASHER ID: PC 122 CR 1138

1. GAI/QA vendor inspection cover letter number-FPC # 9245 DATE 10/31/73

2. Date tendon received on-site 1-17-73 RMR Number 32681

3. Date installed in conduit 4-15-74 Installation NCR's

   Wires removed 0 Wires replaced 0 Total Ineffective wires 0

4. Date buttonheaded 7-19-74 Buttonheading NCR's

   Bad wires 13 Accept. Reheads 12 Total Ineffective wires 1

5. Date stressed 3-5-75 Stressing NCR's

   Date restressed Restressing NCR's

	SHOP END	FIELD END	TOTAL
Elongation (1500 psi to 80% ult.)-Pred./Act.	5 / 5 1/4	5 1/4 / 5 1/8	10 1/4 / 10 3/8
Lift-Off Pressure - Predicted/Actual	6640 / 6930	6600 / 6600	N/A
Shim Thickness/80% Ultimate Pressure	7 3/8 / 7700	6 5/8 / 7610	N/A

   Unseated/Broken Wires 2 Total effective wires after stressing 160

6. Date Bulk-filled 11-4-74 Bulk-Filling NCR's

   Time since installation 6 1/2 months Inlet Pressure 50 psi Outlet Temp. 130°

   Date end caps refilled: Shop 4-14-75 Field 4-14-75

7. Data compiled by D. Weller Organization Salem

   Date 4/4/77

8. Additional Comments:

Florida Power CORPORATION

CRYSTAL RIVER UNIT NO. 3
REACTOR BUILDING PRESTRESSING SYSTEM
TENDON HISTORY

TENDON IDENTIFICATION NUMBER 46H21 CUT LENGTH 154'-4

SHOP WASHER ID: PC 120 CR 167 FIELD WASHER ID: PC 122 CR 1141

1. GAI/QA vendor inspection cover letter number-FPC # N/A DATE

2. Date tendon received on-site 10-15-73 RMR Number 33610

3. Date installed in conduit 4-23-74 Installation NCR's

Wires removed 0 Wires replaced 0 Total Ineffective wires 0

4. Date buttonheaded 7-19-74 Buttonheading NCR's

Bad wires 1 Accept. Reheads 0 Total Ineffective wires 1

5. Date stressed 2-7-75 Stressing NCR's

Date restressed Restressing NCR's

	SHOP END	FIELD END	TOTAL
Elongation (1500 psi to 80% ult.)-Pred./Act.	5 1/8 / 5 1/8	5 1/8 / 5 1/4	10 1/4 / 10 3/8
Lift-Off Pressure - Predicted/Actual	6720 / 6700	6730 / 6950	N/A
Shim Thickness/80% Ultimate Pressure	5 5/8 / 7700	5 9/16 / 7640	N/A

Unseated/Broken Wires 0 Total effective wires after stressing 162

6. Date Bulk-filled 11-4-74 Bulk-Filling NCR's

Time since installation 9½ months Inlet Pressure 50 psi Outlet Temp. 130°

Date end caps refilled: Shop 4-14-75 Field 4-14-75

7. Data compiled by D. Waller Organization Salem

Date 4/4/77

8. Additional Comments:

SHEET 209A OF 282
1ST SURVEILLANCE

Florida Power CORPORATION

CRYSTAL RIVER UNIT NO. 3
REACTOR BUILDING PRESTRESSING SYSTEM
TENDON HISTORY

TENDON IDENTIFICATION NUMBER 46 H21 CUT LENGTH _____

SHOP WASHER ID: PC _____ CR _____ FIELD WASHER ID: PC _____ CR _____

1. GAI/QA vendor inspection cover letter number-FPC # _____ DATE _____

2. Date tendon received on-site _____ RMR Number _____

3. Date installed in conduit _____ Installation NCR's _____

   Wires removed _____ Wires replaced _____ Total Ineffective wires _____

4. Date buttonheaded _____ Buttonheading NCR's _____

   Bad wires _____ Accept. Reheads _____ Total Ineffective wires _____

5. Date stressed _____ Stressing NCR's _____

   Date restressed _____ Restressing NCR's _____

	SHOP END	FIELD END	TOTAL
Elongation (1500 psi to 80% ult.)-Pred./Act.	/	/	/
Lift-Off ~~Pressure~~ FORCE - Predicted/Actual (KIPS)	1425.6 / 1457.5	1425.6 / 1546	N/A
Shim Thickness/80% Ultimate Pressure (LOCK-OFF FORCE)	5 3/4" /	/	N/A

Unseated/Broken Wires 1- BAD PREV. 0- AT SURV. Total effective wires after stressing 162

6. Date Bulk-filled _____ Bulk-Filling NCR's _____

   Time since installation _____ Inlet Pressure _____ Outlet Temp. _____

   Date end caps refilled: Shop _____ Field _____

7. Data compiled by D. F. Griffin Organization FPC

   Date 5-16-78

8. Additional Comments: INSPECTED FIRST SURVEILLANCE (1-10-78)
1) NO INDICATION OF RUST-CORROSION
2) LOCK-OFF FORCE (SHOP-SAME AS LIFT-OFF; FIELD-1524 K)
3) NO INDICATION OF CRACKING AT ANCHORAGES
4) SHOP END SHIM - RECORDS SHOW (5 5/8") - ACTUAL (5 3/4")

CRYSTAL RIVER UNIT NO. 3
REACTOR BUILDING PRESTRESSING SYSTEM
TENDON SURVEILLANCE RECORD

TENDON NO. 46H21

Inspection Period and Date	Location	LIFT OFF CONDITION Force (kips)	Avg. Force (kips)	Shim Thickness (in)	Elong-ation (in)	Total Effective Wires	RETENSIONING Force (kips)	Avg. Force (kips)	Shim Thickness (in)	Elong-ation (in)	Total Effective Wires	Reactor Bldg. Temperature °F Int.	Ext.	Comments
1	2	3	4	5	6	7	8	9	10	11	12	13	14	15
Original Stressing	S-6	1624		5 5/8	5 1/8		N/A		N/A	N/A				
2-7-75	F-4	1682	1653	5 9/16	5 1/4	162	N/A	N/A	N/A	N/A	N/A	N/A	N/A	
1st	S-6	1458		5 3/4	N/A		1458		5 3/4	N/A				
1-10-78	F-4	1546	1502	5 9/16	N/A	163	1514	1536	5 9/16	N/A	~~163~~ 162	106	41	
5TH	S-6	1423		5 7/8	N/A		N/A		N/A	N/A				15 GALLONS OF GREASE ADDED OVER REMOVED.
12/7/93	F-4	1427	1425	5 11/16	N/A	162	N/A	N/A	N/A	N/A	N/A	130°	68°	

Florida Power CORPORATION

CRYSTAL RIVER UNIT NO. 3
REACTOR BUILDING PRESTRESSING SYSTEM
TENDON HISTORY

TENDON IDENTIFICATION NUMBER 46H22 CUT LENGTH 155'-9 1/2

SHOP WASHER ID: PC 120 CR 41 FIELD WASHER ID: PC 122 CR 1140

1. GAI/QA vendor inspection cover letter number-FPC # 9245 DATE 10/31/73

2. Date tendon received on-site 9-17-73 RMR Number 32681

3. Date installed in conduit 4-23-74 Installation NCR's

   Wires removed 0 Wires replaced 0 Total Ineffective wires 0

4. Date buttonheaded 7-19-74 Buttonheading NCR's

   Bad wires 1 Accept. Reheads 0 Total Ineffective wires 1

5. Date stressed 3-4-75 Stressing NCR's

   Date restressed Restressing NCR's

	SHOP END	FIELD END	TOTAL
Elongation (1500 psi to 80% ult.)-Pred./Act.	5 1/8 / 5 5/8	5 1/8 / 5 1/4	10 1/4 / 10 7/8
Lift-Off Pressure - Predicted/Actual	6720 / 6750	6730 / 7000	N/A
Shim Thickness/80% Ultimate Pressure	6 3/8 / 7700	5 9/16 / 7640	N/A

Unseated/Broken Wires 0 Total effective wires after stressing 162

6. Date Bulk-filled 11-14-74 Bulk-Filling NCR's

   Time since installation [illegible] Inlet Pressure 55 psi Outlet Temp. 130°

   Date end caps refilled: Shop 4-14-75 Field 4-14-75

7. Data compiled by D. Waller Organization Salem

   Date 4/4/77

8. Additional Comments:

Florida Power CORPORATION

CRYSTAL RIVER UNIT NO. 3
REACTOR BUILDING PRESTRESSING SYSTEM
TENDON HISTORY

TENDON IDENTIFICATION NUMBER 51H33 CUT LENGTH 155'-6 1/2

SHOP WASHER ID: PC 121 CR 457 FIELD WASHER ID: PC 122 CR 1176

1. GAI/QA vendor inspection cover letter number-FPC # 9372 DATE 11/20/73

2. Date tendon received on-site 10-24-73 RMR Number 33918

3. Date installed in conduit 12-27-73 Installation NCR's

   Wires removed 0 Wires replaced 0 Total Ineffective wires 0

4. Date buttonheaded 6-12-74 Buttonheading NCR's

   Bad wires 0 Accept. Reheads 0 Total Ineffective wires 0

5. Date stressed 1-7-75 Stressing NCR's

   Date restressed Restressing NCR's

	SHOP END	FIELD END	TOTAL
Elongation (1500 psi to 80% ult.)-Pred./Act.	5 1/8, 5 3/8	5 1/8, 4 7/8	10 1/4, 10 1/4
Lift-Off Pressure - Predicted/Actual	6810, 6850	6750, 6800	N/A
Shim Thickness/80% Ultimate Pressure	6 9/16, 7780	6, 7700	N/A

Unseated/Broken Wires 0 Total effective wires after stressing 163

6. Date Bulk-filled 7-15-74 Bulk-Filling NCR's

   Time since installation 8 months Inlet Pressure 34 psi Outlet Temp. 135°

   Date end caps refilled: Shop 4-17-75 Field 4-15-75

7. Data compiled by D. Walker Organization Salem

   Date 4/4/77

8. Additional Comments:

Florida Power CORPORATION

CRYSTAL RIVER UNIT NO. 3
REACTOR BUILDING PRESTRESSING SYSTEM
TENDON HISTORY

TENDON IDENTIFICATION NUMBER 51H34 CUT LENGTH 155'-7"

SHOP WASHER ID: PC 121 CR 459 FIELD WASHER ID: PC 121 CR 493

1. GAI/QA vendor inspection cover letter number-FPC # 9372 DATE 11/20/73

2. Date tendon received on-site 10-24-73 RMR Number 33918

3. Date installed in conduit 12-27-73 Installation NCR's

Wires removed 0 Wires replaced 0 Total Ineffective wires 0

4. Date buttonheaded 6-12-74 Buttonheading NCR's

Bad wires 6 Accept. Reheads 6 Total Ineffective wires 0

5. Date stressed 3-13-75 Stressing NCR's

Date restressed Restressing NCR's

	SHOP END	FIELD END	TOTAL
Elongation (1500 psi to 80% ult.)-Pred./Act.	5 1/8 , 5 3/8	5 1/8 , 4 7/8	10 1/4 , 10 1/4
Lift-Off Pressure - Predicted/Actual	6800 , 6800	6750 , 6850	N/A
Shim Thickness/80% Ultimate Pressure	7 3/8 , 7770	7 3/16 , 7700	N/A

Unseated/Broken Wires 0 Total effective wires after stressing 163

6. Date Bulk-filled 7-15-74 Bulk-Filling NCR's

Time since installation 8 months Inlet Pressure 31 psi Outlet Temp. 136°

Date end caps refilled: Shop 4-17-75 Field 4-15-75

7. Data compiled by D. Walls Organization Salem

Date 4/4/77

8. Additional Comments:

Florida Power CORPORATION

CRYSTAL RIVER UNIT NO. 3
REACTOR BUILDING PRESTRESSING SYSTEM
TENDON HISTORY

TENDON IDENTIFICATION NUMBER 51H35 CUT LENGTH 155'-6"

SHOP WASHER ID: PC 120 CR 44 FIELD WASHER ID: PC 122 CR 1152

1. GAI/QA vendor inspection cover letter number-FPC # 9372 DATE 11/20/73

2. Date tendon received on-site 10-29-73 RMR Number 34092

3. Date installed in conduit 12-28-73 Installation NCR's

   Wires removed 0 Wires replaced 0 Total Ineffective wires 0

4. Date buttonheaded 6-13-74 Buttonheading NCR's

   Bad wires 0 Accept. Reheads 0 Total Ineffective wires 0

5. Date stressed 1-6-75 Stressing NCR's

   Date restressed Restressing NCR's

	SHOP END	FIELD END	TOTAL
Elongation (1500 psi to 80% ult.)-Pred./Act.	5 1/8 / 5 1/8	5 1/8 / 4 7/8	10 1/4 / 10
Lift-Off Pressure - Predicted/Actual	6810 / 6500	6750 / 6800	N/A
Shim Thickness/80% Ultimate Pressure	6 / 7780	6 / 7700	N/A

   Unseated/Broken Wires 0 Total effective wires after stressing 163

6. Date Bulk-filled 7-15-74 Bulk-Filling NCR's

   Time since installation 8 months Inlet Pressure 33 psi Outlet Temp. 135°

   Date end caps refilled: Shop 4-17-75 Field 4-15-75

7. Data compiled by D. Walker Organization Salem

   Date 4/4/77

8. Additional Comments:

Florida Power CORPORATION

CRYSTAL RIVER UNIT NO. 3
REACTOR BUILDING PRESTRESSING SYSTEM
TENDON HISTORY

TENDON IDENTIFICATION NUMBER 62H29 CUT LENGTH 155'-8 1/2

SHOP WASHER ID: PC 121 CR 393 FIELD WASHER ID: PC 122 CR 1113

1. GAI/QA vendor inspection cover letter number-FPC # 8920 DATE 9/13/73

2. Date tendon received on-site 8-20-73 RMR Number 31858

3. Date installed in conduit 11-14-73 Installation NCR's

   Wires removed 0 Wires replaced 0 Total Ineffective wires 0

4. Date buttonheaded 5-20-74 Buttonheading NCR's

   Bad wires 1 Accept. Reheads 0 Total Ineffective wires 1

5. Date stressed 2-11-75 Stressing NCR's

   Date restressed Restressing NCR's

	SHOP END	FIELD END	TOTAL
Elongation (1500 psi to 80% ult.)-Pred./Act.	NA / 15 1/2	5 1/8 / 4 7/8	NA / 10 3/8
Lift-Off Pressure - Predicted/Actual	NA / 6750	6700 / 6750	N/A
Shim Thickness/80% Ultimate Pressure	6 3/8 / NA	6 3/8 / 7650	N/A

   Unseated/Broken Wires 0 Total effective wires after stressing 162

6. Date Bulk-filled 6-5-74 Bulk-Filling NCR's

   Time since installation 1 months Inlet Pressure 20 lb Outlet Temp. 115°

   Date end caps refilled: Shop 3-13-75 Field 4-15-75

7. Data compiled by D Waller Organization Salem

   Date 4/4/77

8. Additional Comments:

Florida Power CORPORATION

CRYSTAL RIVER UNIT NO. 3
REACTOR BUILDING PRESTRESSING SYSTEM
TENDON HISTORY

TENDON IDENTIFICATION NUMBER 62H.30 CUT LENGTH 155'-7 1/2"

SHOP WASHER ID: PC 120 CR 96 FIELD WASHER ID: PC 121 CR 609

1. GAI/QA vendor inspection cover letter number-FPC # 8920 DATE 9/13/73
2. Date tendon received on-site 8-20-73 RMR Number 31858
3. Date installed in conduit 11-14-73 Installation NCR's
   Wires removed 0 Wires replaced 0 Total Ineffective wires 0
4. Date buttonheaded 5-21-74 Buttonheading NCR's
   Bad wires 0 Accept. Reheads 0 Total Ineffective wires 0
5. Date stressed 2-28-75 Stressing NCR's
   Date restressed Restressing NCR's

	SHOP END	FIELD END	TOTAL
Elongation (1500 psi to 80% ult.)-Pred./Act.	5 1/8 / 5 9/16	5 1/8 / 4 3/4	10 1/4 / 10 5/16
Lift-Off Pressure - Predicted/Actual	6800 / 6600	6750 / 6600	N/A
Shim Thickness/80% Ultimate Pressure	6 3/8 / 7770	6 5/8 / 7700	N/A

Unseated/Broken Wires 0 Total effective wires after stressing 163

6. Date Bulk-filled 6-13-74 Bulk-Filling NCR's
   Time since installation 7 months Inlet Pressure 15 lbs Outlet Temp. 120°
   Date end caps refilled: Shop 3-13-75 Field 4-15-75
7. Data compiled by D. Waller Organization Salem
   Date 4/4/77
8. Additional Comments:

Florida Power CORPORATION

CRYSTAL RIVER UNIT NO. 3
REACTOR BUILDING PRESTRESSING SYSTEM
TENDON HISTORY

TENDON IDENTIFICATION NUMBER 62H31 CUT LENGTH 155'-6 3/4

SHOP WASHER ID: PC 120 CR 164 FIELD WASHER ID: PC 121 CR 958

1. GAI/QA vendor inspection cover letter number-FPC # 8920 DATE 9/13/73

2. Date tendon received on-site 8-20-73 RMR Number 31858

3. Date installed in conduit 11-15-73 Installation NCR's

Wires removed 0 Wires replaced 0 Total Ineffective wires 0

4. Date buttonheaded 5-22-74 Buttonheading NCR's

Bad wires 0 Accept. Reheads 0 Total Ineffective wires 0

5. Date stressed 2-12-75 Stressing NCR's

Date restressed Restressing NCR's

	SHOP END	FIELD END	TOTAL
Elongation (1500 psi to 80% ult.)-Pred./Act.	5 1/8 / 5 3/8	5 1/8 / 5 1/8	10 1/4 / 10 1/2
Lift-Off Pressure - Predicted/Actual	6800 / 7000	6750 / 6900	N/A
Shim Thickness/80% Ultimate Pressure	6 1/4 / 7770	6 / 7700	N/A

Unseated/Broken Wires 0 Total effective wires after stressing 163

6. Date Bulk-filled 6-13-74 Bulk-Filling NCR's

Time since installation 8 months Inlet Pressure 30 lb. Outlet Temp. 134°

Date end caps refilled: Shop 3-14-75 Field 4-15-75

7. Data compiled by D. Waller Organization Salem

Date 4/4/77

8. Additional Comments:

Florida Power CORPORATION

CRYSTAL RIVER UNIT NO. 3
REACTOR BUILDING PRESTRESSING SYSTEM
TENDON HISTORY

TENDON IDENTIFICATION NUMBER D128 CUT LENGTH 146'-2½"

SHOP WASHER ID: PC 121 CR 637 FIELD WASHER ID: PC 121 CR 894

1. GAI/QA vendor inspection cover letter number-FPC # 10202 DATE 4/1/74

2. Date tendon received on-site 3-22-74 RMR Number 38020

3. Date installed in conduit 5-10-74 Installation NCR's 1368

   Wires removed 2 Wires replaced 0 Total Ineffective wires 2

4. Date buttonheaded 10-22-74 Buttonheading NCR's

   Bad wires 4 Accept. Reheads 4 Total Ineffective wires 0

5. Date stressed 11-5-74 Stressing NCR's

   Date restressed Restressing NCR's

	SHOP END	FIELD END	TOTAL
Elongation (1500 psi to 80% ult.)-Pred./Act.	4⅞"/4⅝"	4⅞"/4⅞"	9¾"/9½"
Lift-Off Pressure - Predicted/Actual	6710/6800	6650/6900	N/A
Shim Thickness/80% Ultimate Pressure	6"/7620	6/7600	N/A

   Unseated/Broken Wires 2 Total effective wires after stressing 159

6. Date Bulk-filled 3-25-75 Bulk-Filling NCR's

   Time since installation 10½ months Inlet Pressure 55 psi Outlet Temp. 120°

   Date end caps refilled: Shop Field

7. Data compiled by D Waller Organization Salem

   Date 3/30/77

8. Additional Comments:

Florida Power CORPORATION

CRYSTAL RIVER UNIT NO. 3
REACTOR BUILDING PRESTRESSING SYSTEM
TENDON HISTORY

TENDON IDENTIFICATION NUMBER D 128 CUT LENGTH ____

SHOP WASHER ID: PC ____ CR ____ FIELD WASHER ID: PC ____ CR ____

1. GAI/QA vendor inspection cover letter number-FPC # ____ DATE ____

2. Date tendon received on-site ____ RMR Number ____

3. Date installed in conduit ____ Installation NCR's ____

   Wires removed ____ Wires replaced ____ Total Ineffective wires ____

4. Date buttonheaded ____ Buttonheading NCR's ____

   Bad wires ____ Accept. Reheads ____ Total Ineffective wires ____

5. Date stressed ____ Stressing NCR's ____

   Date restressed ____ Restressing NCR's ____

	SHOP END	FIELD END	TOTAL
Elongation (1500 psi to 80% ult.)-Pred./Act.	/	/	/
Lift-Off Pressure - Predicted/Actual	/	/	N/A
Shim Thickness/80% Ultimate Pressure	/	/	N/A

   Unseated/Broken Wires ____ Total effective wires after stressing ____

6. Date Bulk-filled ____ Bulk-Filling NCR's ____

   Time since installation ____ Inlet Pressure ____ Outlet Temp. ____

   Date end caps refilled: Shop ____ Field ____

7. Data compiled by D. Walker Organization Sales

   Date 4/11/77

8. Additional Comments: Dome Repairs –
Degreasing - Shop End (7/9/76) Field End (7/10/76)
Lift-Off reading - Shop 5100 (7/9/76) Field 6200 (7/11/76) 5800 (7/17/76)
Detensioning - Shop 4600 Field 6200 (7/17/76)
Regreasing - (12/1/76) 200 PSIG NCR #2582, 172°-162° NCR #2581

Florida Power CORPORATION

CRYSTAL RIVER UNIT NO. 3
REACTOR BUILDING PRE STRESSING SYSTEM
TENDON HISTORY

TENDON IDENTIFICATION NUMBER D129 CUT LENGTH 144'-6 1/4"

SHOP WASHER ID: PC 121 CR 996 FIELD WASHER ID: PC 121 CR 866

1. GAI/QA vendor inspection cover letter number-FPC # 10202 DATE 4/1/74

2. Date tendon received on-site 3-22-74 RMR Number 38020 4/11/74

3. Date installed in conduit 5-13-74 Installation NCR's

Wires removed 0 Wires replaced 0 Total Ineffective wires 0

4. Date buttonheaded 9-23-74 Buttonheading NCR's

Bad wires 8 Accept. Reheads 7 Total Ineffective wires 1

5. Date stressed 11-19-74 Stressing NCR's

Date restressed Restressing NCR's

	SHOP END	FIELD END	TOTAL
Elongation (1500 psi to 80% ult.)-Pred./Act.	4 7/8"/4 5/8"	4 7/8"/5	9 3/4"/9 5/8"
Lift-Off Pressure - Predicted/Actual	6710/6850	6740/6600	N/A
Shim Thickness/80% Ultimate Pressure	6 1/4"/7660	6/7700	N/A

Unseated/Broken Wires 0 Total effective wires after stressing 161

6. Date Bulk-filled 3-25-75 Bulk-Filling NCR's

Time since installation 10 1/2 months Inlet Pressure 55 psi Outlet Temp. 118°

Date end caps refilled: Shop Field

7. Data compiled by D. Wells Organization Salem

Date 3/30/77

8. Additional Comments: One (1) wire apparently pulled thru bottonhead on field end. Washer after stressing.

One (1) wire missing from Tendon

Florida Power CORPORATION

CRYSTAL RIVER UNIT NO. 3
REACTOR BUILDING PRESTRESSING SYSTEM
TENDON HISTORY

TENDON IDENTIFICATION NUMBER D 129 CUT LENGTH _____

SHOP WASHER ID: PC _____ CR _____ FIELD WASHER ID: PC _____ CR _____

1. GAI/QA vendor inspection cover letter number-FPC # _____ DATE _____

2. Date tendon received on-site _____ RMR Number _____

3. Date installed in conduit _____ Installation NCR's _____

   Wires removed _____ Wires replaced _____ Total Ineffective wires _____

4. Date buttonheaded _____ Buttonheading NCR's _____

   Bad wires _____ Accept. Reheads _____ Total Ineffective wires _____

5. Date stressed _____ Stressing NCR's _____

   Date restressed _____ Restressing NCR's _____

	SHOP END	FIELD END	TOTAL
Elongation (1500 psi to 80% ult.)-Pred./Act.	/	/	/
Lift-Off Pressure - Predicted/Actual	/	/	N/A
Shim Thickness/80% Ultimate Pressure	/	/	N/A

   Unseated/Broken Wires _____ Total effective wires after stressing _____

6. Date Bulk-filled _____ Bulk-Filling NCR's _____

   Time since installation _____ Inlet Pressure _____ Outlet Temp. _____

   Date end caps refilled: Shop _____ Field _____

7. Data compiled by D. Waller Organization Salem

   Date 4/11/77

8. Additional Comments: Dome Repair –
   Degreasing - Shop End (7/16/76) Field End (7/16/76)
   Lift-off Readings - Shop 6200 (7/15/76) Field 6000 (7/16/76)
   Regreasing - 12/1/76 200 PSIG NCR #2582, 180° NCR # 2581

Florida Power CORPORATION

CRYSTAL RIVER UNIT NO. 3
REACTOR BUILDING PRE-STRESSING SYSTEM
TENDON HISTORY

TENDON IDENTIFICATION NUMBER D130 CUT LENGTH 142'-7½"

SHOP WASHER ID: PC 121 CR 924 FIELD WASHER ID: PC 122 CR 1260

1. GAI/QA vendor inspection cover letter number-FPC # 10202 DATE 4/1/74

2. Date tendon received on-site 3-22-74 RMR Number 38020

3. Date installed in conduit 5-13-74 Installation NCR's

   Wires removed 0 Wires replaced 0 Total Ineffective wires 0

4. Date buttonheaded 9-20-74 Buttonheading NCR's

   Bad wires 8 Accept. Reheads 8 Total Ineffective wires 0

5. Date stressed 10-31-74 Stressing NCR's

   Date restressed Restressing NCR's

	SHOP END	FIELD END	TOTAL
Elongation (1500 psi to 80% ult.)-Pred./Act.	4¾"/5"	4¾"/5"	9½"/10"
Lift-Off Pressure - Predicted/Actual	6870/6850	6810/6800	N/A
Shim Thickness/80% Ultimate Pressure	5⅝"/7810	5⅝"/7780	N/A

   Unseated/Broken Wires 0 Total effective wires after stressing 163

6. Date Bulk-filled 4-4-75 Bulk-Filling NCR's

   Time since installation 10¾ months Inlet Pressure 55 psi Outlet Temp. 140°

   Date end caps refilled: Shop Field

7. Data compiled by D. Waller Organization Salem

   Date 3/30/77

8. Additional Comments:

Florida Power Corporation

CRYSTAL RIVER UNIT NO. 3
REACTOR BUILDING PRESTRESSING SYSTEM
TENDON HISTORY

TENDON IDENTIFICATION NUMBER D211 CUT LENGTH 142'-0 1/2"

HOP WASHER ID: PC 121 CR 487 FIELD WASHER ID: PC 122 CR 1268

. QAI/QA vendor inspection cover letter number-FPC # 10245 DATE 4/10/74

. Date tendon received on-site 3-29-74 RMR Number 38246

. Date installed in conduit 5-30-74 Installation NCR's

Wires removed 0 Wires replaced 0 Total Ineffective wires 0

. Date buttonheaded 10-17-74 Buttonheading NCR's

Bad wires 0 Accept. Reheads 0 Total Ineffective wires 0

. Date stressed 10-30-74 Stressing NCR's 1681, 1683

Date restressed Restressing NCR's

	SHOP END	FIELD END	TOTAL
Elongation (1500 psi to 80% ult.)-Pred./Act.	4 3/8" / 5 1/4"	5" / 5 1/2"	9 3/8" / 10 3/4"
Lift-Off Pressure - Predicted/Actual	6,810 / 7,100 psi	6,870 / 7,000 psi	N/A
Shim Thickness/80% Ultimate Pressure	5 1/2" / 7,780	6" / 7,810	N/A

Unseated/Broken Wires 1 Total effective wires after stressing 162

. Date Bulk-filled 3-26-75 Bulk-Filling NCR's

Time since installation 9 3/4 months Inlet Pressure 50 psi Outlet Temp. 132°

Date end caps refilled: Shop Field

. Data compiled by D Walla Organization Salem

Date 3/29/77

. Additional Comments: One wire not seated on washer.

Florida Power CORPORATION

CRYSTAL RIVER UNIT NO. 3
REACTOR BUILDING PRESTRESSING SYSTEM
TENDON HISTORY

TENDON IDENTIFICATION NUMBER D211 CUT LENGTH ____

SHOP WASHER ID: PC ____ CR ____ FIELD WASHER ID: PC ____ CR ____

1. GAI/QA vendor inspection cover letter number-FPC # ____ DATE ____

2. Date tendon received on-site ____ RMR Number ____

3. Date installed in conduit ____ Installation NCR's ____

   Wires removed ____ Wires replaced ____ Total Ineffective wires ____

4. Date buttonheaded ____ Buttonheading NCR's ____

   Bad wires ____ Accept. Reheads ____ Total Ineffective wires ____

5. Date stressed ____ Stressing NCR's ____

   Date restressed ____ Restressing NCR's ____

	SHOP END	FIELD END	TOTAL
Elongation (1500 psi to 80% ult.)-Pred./Act.	/	/	/
Lift-Off Pressure - Predicted/Actual	/	/	N/A
Shim Thickness/80% Ultimate Pressure	/	/	N/A

   Unseated/Broken Wires ____ Total effective wires after stressing ____

6. Date Bulk-filled ____ Bulk-Filling NCR's ____

   Time since installation ____ Inlet Pressure ____ Outlet Temp. ____

   Date end caps refilled: Shop ____ Field ____

7. Data compiled by D. Walls Organization Salem

   Date 7/11/77

8. Additional Comments: Dome Repair – Degreasing – Shop (7/15/76)

Calculation S07-0033
Revision 0
Attachment 2

Florida Power Corporation

CRYSTAL RIVER UNIT NO. 3
REACTOR BUILDING PRESTRESSING SYSTEM
TENDON HISTORY

TENDON IDENTIFICATION NUMBER D212 CUT LENGTH 144'-3"

SHOP WASHER ID: PC 121 CR 1032 FIELD WASHER ID: PC 122 CR 1214

1. GAI/QA vendor inspection cover letter number-FPC # 10245 DATE 4/10/74

2. Date tendon received on-site 3-29-74 RMR Number 38246

3. Date installed in conduit 6-4-74 Installation NCR's 1410

Wires removed 0 Wires replaced 0 Total Ineffective wires 0

4. Date buttonheaded 10-17-74 Buttonheading NCR's

Bad wires 1 Accept. Reheads 0 Total Ineffective wires 1

5. Date stressed 12-3-74 Stressing NCR's

Date restressed Restressing NCR's

	SHOP END	FIELD END	TOTAL
Elongation (1500 psi to 80% ult.)-Pred./Act.	4 3/8" / 4 5/8"	5 1/8" / 4 7/8"	9 1/2" / 9 1/2"
Lift-Off Pressure - Predicted/Actual	6,770 / 6,600 psi	6,770 / 6,700 psi	N/A
Shim Thickness/80% Ultimate Pressure	6 3/8" / 7,730	6 3/8" / 7,720	N/A

Unseated/Broken Wires 0 Total effective wires after stressing 162

6. Date Bulk-filled 3-26-75 Bulk-Filling NCR's

Time since installation 9 3/4 months Inlet Pressure 47 psi Outlet Temp. 124°

Date end caps refilled: Shop Field

7. Data compiled by D Waller Organization Salem

Date 3/29/77

8. Additional Comments:

CRYSTAL RIVER UNIT NO. 3
REACTOR BUILDING PRESTRESSING SYSTEM
TENDON SURVEILLANCE RECORD

TENDON NO. D212

Inspection Period and Date	Location	LIFT OFF CONDITION Force (kips)	Avg. Force (kips)	Shim Thickness (in)	Elong-ation (in)	Total Effective Wires	RETENSIONING Force (kips)	Avg. Force (kips)	Shim Thickness (in)	Elong-ation (in)	Total Effective Wires	Reactor Bldg. Temperature °F Int.	Ext.	Comments
1	2	3	4	5	6	7	8	9	10	11	12	13	14	15
Original Stressing	S	1588		6 3/8"	4 5/8"		N/A		N/A	N/A				
12/3/74	F	1612	1600	6 3/8"	4 7/8"	162	N/A	N/A	N/A	N/A	N/A	N/A	N/A	
3rd	S	1392		6 3/8"	N/A		N/A		N/A	N/A				1. Lift-off only
10/26/81	F	1285	1338	6 3/8"	N/A	162	N/A	N/A	N/A	N/A	162	82	83	
4TH	S-1	1292		6 5/8	N/A		N/A		N/A	N/A		85°F	S 67°F	1. 12 GAL OF GREASE NET ADDED
10/26/87	F-3	1260	1276	6 1/2	N/A	162	N/A	N/A	N/A	N/A	N/A	90°F	F 72°F	

Florida Power CORPORATION

CRYSTAL RIVER UNIT NO. 3
REACTOR BUILDING PRESTRESSING SYSTEM
TENDON HISTORY

TENDON IDENTIFICATION NUMBER D213 CUT LENGTH 146'-2 1/4"

SHOP WASHER ID: PC 121 CR 984 FIELD WASHER ID: PC 121 CR 878

1. GAI/QA vendor inspection cover letter number-FPC # 10245 DATE 4/10/74

2. Date tendon received on-site 3-29-74 RMR Number 38246

3. Date installed in conduit 6-10-74 Installation NCR's

   Wires removed 0 Wires replaced 0 Total Ineffective wires 0

4. Date buttonheaded 10-16-74 Buttonheading NCR's

   Bad wires 0 Accept. Reheads 0 Total Ineffective wires 0

5. Date stressed 11-18-74 Stressing NCR's

   Date restressed Restressing NCR's

	SHOP END	FIELD END	TOTAL
Elongation (1500 psi to 80% ult.)-Pred./Act.	5 1/8" / 4 3/4"	4 3/8" / 4 3/4"	9 1/2" / 9 1/2"
Lift-Off Pressure - Predicted/Actual	6,840 / 6,900 psi	6,800 / 6,800 psi	N/A
Shim Thickness/80% Ultimate Pressure	6 5/8" / 7,790	6 3/8 / 7,770	N/A

   Unseated/Broken Wires 0 Total effective wires after stressing 163

6. Date Bulk-filled 3-26-75 Bulk-Filling NCR's

   Time since installation 9 1/2 months Inlet Pressure 51 psi Outlet Temp. 122°

   Date end caps refilled: Shop Field

7. Data compiled by D Walle Organization Salem

   Date 3/29/77

8. Additional Comments: Yellow shims

Florida Power
CORPORATION

CRYSTAL RIVER UNIT NO. 3
REACTOR BUILDING PRESTRESSING SYSTEM
TENDON HISTORY

TENDON IDENTIFICATION NUMBER D 213 CUT LENGTH _____

SHOP WASHER ID: PC _____ CR _____ FIELD WASHER ID: PC _____ CR _____

1. GAI/QA vendor inspection cover letter number-FPC # _____ DATE _____

2. Date tendon received on-site _____ RMR Number _____

3. Date installed in conduit _____ Installation NCR's _____

   Wires removed _____ Wires replaced _____ Total Ineffective wires _____

4. Date buttonheaded _____ Buttonheading NCR's _____

   Bad wires _____ Accept. Reheads _____ Total Ineffective wires _____

5. Date stressed _____ Stressing NCR's _____

   Date restressed _____ Restressing NCR's _____

	SHOP END	FIELD END	TOTAL
Elongation (1500 psi to 80% ult.)-Pred./Act.	/	/	/
Lift-Off Pressure - Predicted/Actual	/	/	N/A
Shim Thickness/80% Ultimate Pressure	/	/	N/A

   Unseated/Broken Wires _____ Total effective wires after stressing _____

6. Date Bulk-filled _____ Bulk-Filling NCR's _____

   Time since installation _____ Inlet Pressure _____ Outlet Temp. _____

   Date end caps refilled: Shop _____ Field _____

7. Data compiled by D Waller Organization Sales

   Date 4/11/77

8. Additional Comments: Dome Repair —
   Degreasing - Shop - (7/15/76)

Florida Power CORPORATION

CRYSTAL RIVER UNIT NO. 3
REACTOR BUILDING PRESTRESSING SYSTEM
TENDON HISTORY

TENDON IDENTIFICATION NUMBER D237 CUT LENGTH 123' - 2 3/4

SHOP WASHER ID: PC 121 CR 915 FIELD WASHER ID: PC 121 CR 654

1. GAI/QA vendor inspection cover letter number-FPC # 10360 DATE 5/1/74

2. Date tendon received on-site 4-8-74 RMR Number 38547

3. Date installed in conduit 8-7-74 Installation NCR's

   Wires removed 0 Wires replaced 0 Total Ineffective wires 0

4. Date buttonheaded 10-8-74 Buttonheading NCR's

   Bad wires 0 Accept. Reheads 0 Total Ineffective wires 0

5. Date stressed 12-5-74 Stressing NCR's

   Date restressed Restressing NCR's

	SHOP END	FIELD END	TOTAL
Elongation (1500 psi to 80% ult.)-Pred./Act.	5 1/8" / 4 3/4"	3" / 3 7/8"	8 1/8" / 8 5/8"
Lift-Off Pressure - Predicted/Actual	6,810/6,900 PSI	6,810/6,900 PSI	N/A
Shim Thickness/80% Ultimate Pressure	6 3/4" / 7,780	6 3/8" / 7,780	N/A

   Unseated/Broken Wires 0 Total effective wires after stressing 163

6. Date Bulk-filled 3-26-75 Bulk-Filling NCR's

   Time since installation 7 3/4 months Inlet Pressure 70 PSI Outlet Temp. 130°

   Date end caps refilled: Shop Field

7. Data compiled by D. Waller Organization Salem

   Date 3/29/77

8. Additional Comments:

Florida Power CORPORATION

CRYSTAL RIVER UNIT NO. 3
REACTOR BUILDING PRESTRESSING SYSTEM
TENDON HISTORY

TENDON IDENTIFICATION NUMBER D238 CUT LENGTH 118'-11 3/4"

SHOP WASHER ID: PC 121 CR 1029 FIELD WASHER ID: PC — CR 657

1. GAI/QA vendor inspection cover letter number-FPC # 10360 DATE 5/1/74

2. Date tendon received on-site 4-8-74 RMR Number 38547

3. Date installed in conduit 8-7-74 Installation NCR's

   Wires removed 0 Wires replaced 0 Total Ineffective wires 0

4. Date buttonheaded 10-8-74 Buttonheading NCR's

   Bad wires 0 Accept. Reheads 0 Total Ineffective wires 0

5. Date stressed 11-25-74 Stressing NCR's

   Date restressed Restressing NCR's

	SHOP END	FIELD END	TOTAL
Elongation (1500 psi to 80% ult.)-Pred./Act.	4 7/8" / 4 1/2"	3" / 3 3/4"	7 7/8" / 8 1/4"
Lift-Off Pressure - Predicted/Actual	6,800 / 7,050 psi	6,840 / 6,800 psi	N/A
Shim Thickness/80% Ultimate Pressure	7" / 7,770	6 3/8" / 7,790	N/A

   Unseated/Broken Wires 0 Total effective wires after stressing 163

6. Date Bulk-filled 3-26-75 Bulk-Filling NCR's

   Time since installation 7 3/4 months Inlet Pressure 50 psi Outlet Temp. 134°

   Date end caps refilled: Shop Field

7. Data compiled by D. Waller Organization Salem

   Date 3/29/77

8. Additional Comments:

Florida Power CORPORATION

CRYSTAL RIVER UNIT NO. 3
REACTOR BUILDING PRESTRESSING SYSTEM
TENDON HISTORY

TENDON IDENTIFICATION NUMBER D 23B CUT LENGTH _____

SHOP WASHER ID: PC _____ CR _____ FIELD WASHER ID: PC 121 CR _____

1. GAI/QA vendor inspection cover letter number-FPC # _____ DATE _____

2. Date tendon received on-site _____ RMR Number _____

3. Date installed in conduit _____ Installation NCR's _____

   Wires removed _____ Wires replaced _____ Total Ineffective wires _____

4. Date buttonheaded _____ Buttonheading NCR's _____

   Bad wires _____ Accept. Reheads _____ Total Ineffective wires _____

5. Date stressed _____ Stressing NCR's _____

   Date restressed _____ Restressing NCR's _____

	SHOP END	FIELD END	TOTAL
Elongation (1500 psi to 80% ult.)-Pred./Act.	/	/	/
Lift-Off Pressure - Predicted/Actual	/	/	N/A
Shim Thickness/80% Ultimate Pressure	/	/	N/A

   Unseated/Broken Wires _____ Total effective wires after stressing _____

6. Date Bulk-filled _____ Bulk-Filling NCR's _____

   Time since installation _____ Inlet Pressure _____ Outlet Temp. _____

   Date end caps refilled: Shop _____ Field _____

7. Data compiled by D.F. Giffin Organization FPC

   Date 9-30-77

8. Additional Comments: IN PREPARATION FOR 1ST SURVEILLANCE

Florida Power Corporation

CRYSTAL RIVER UNIT NO. 3
REACTOR BUILDING PRESTRESSING SYSTEM
TENDON HISTORY

TENDON IDENTIFICATION NUMBER D 239 CUT LENGTH 114'-5"

SHOP WASHER ID: PC 121 CR 928 FIELD WASHER ID: PC 121 CR 645

. GAI/QA vendor inspection cover letter number-FPC # 10360 DATE 5/1/74

. Date tendon received on-site 4-8-74 RMR Number 38547

. Date installed in conduit 8-7-74 Installation NCR's

Wires removed 0 Wires replaced 0 Total Ineffective wires 0

. Date buttonheaded 10-8-74 Buttonheading NCR's

Bad wires 0 Accept. Reheads 0 Total Ineffective wires 0

. Date stressed 11-12-74 Stressing NCR's 1691, 1692

Date restressed (12-9-74)(4-2-75) Restressing NCR's 1768, 1691, 1692

	SHOP END	FIELD END	TOTAL
Elongation (1500 psi to 80% ult.)-Pred./Act.	4⅝" / 13⅝"	3" / 14¼"	7⅝" / 17⅞"
Lift-Off Pressure - Predicted/Actual	6,810 / 6,800 PSI	6,840 / 6,650 PSI	N/A
Shim Thickness/80% Ultimate Pressure	6" / 17,780	7" / 17,790	N/A

Unseated/Broken Wires 0 Total effective wires after stressing 163

. Date Bulk-filled 4-2-75 Bulk-Filling NCR's

Time since installation 7¾ months Inlet Pressure 25 PSI Outlet Temp. 135°

Date end caps refilled: Shop Field

. Data compiled by D. Walla Organization Salem

Date 3/29/77

. Additional Comments: Tendon was restressed 3 times. 9½ turns (twist) were removed.

Florida Power CORPORATION

CRYSTAL RIVER UNIT NO. 3
REACTOR BUILDING PRESTRESSING SYSTEM
TENDON HISTORY

TENDON IDENTIFICATION NUMBER D336 CUT LENGTH 128'-5 1/4

SHOP WASHER ID: PC 122 CR 1132 FIELD WASHER ID: PC 122 CR 1234

1. GAI/QA vendor inspection cover letter number-FPC # N/A DATE

2. Date tendon received on-site 4-29-74 RMR Number 39098

3. Date installed in conduit 5-14-74 Installation NCR's

   Wires removed 0 Wires replaced 0 Total Ineffective wires 0

4. Date buttonheaded 10-2-74 Buttonheading NCR's

   Bad wires 0 Accept. Reheads 0 Total Ineffective wires 0

5. Date stressed 12-4-74 Stressing NCR's

   Date restressed Restressing NCR's

	SHOP END	FIELD END	TOTAL
Elongation (1500 psi to 80% ult.)-Pred./Act.	4 1/8 / 14 3/4	4 1/8 / 14	8 1/4 / 18 3/4
Lift-Off Pressure - Predicted/Actual	6840/6750	6800/6700	N/A
Shim Thickness/80% Ultimate Pressure	6 3/8 / 7790	6 3/4 / 7770	N/A

   Unseated/Broken Wires 0 Total effective wires after stressing 163

6. Date Bulk-filled 3-28-75 Bulk-Filling NCR's

   Time since installation 10½ months Inlet Pressure 35 psi Outlet Temp. 130°

   Date end caps refilled: Shop Field

7. Data compiled by D. Walls Organization Salem

   Date 4/1/77

8. Additional Comments:

Florida Power CORPORATION

CRYSTAL RIVER UNIT NO. 3
REACTOR BUILDING PRESTRESSING SYSTEM
TENDON HISTORY

TENDON IDENTIFICATION NUMBER D337 CUT LENGTH 124'-6½

SHOP WASHER ID: PC 121 CR 1071 FIELD WASHER ID: PC 121 CR 998

1. GAI/QA vendor inspection cover letter number-FPC # N/A DATE

2. Date tendon received on-site 4-29-74 RMR Number 39098

3. Date installed in conduit 5-14-74 Installation NCR's

   Wires removed 0 Wires replaced 0 Total Ineffective wires 0

4. Date buttonheaded 10-2-74 Buttonheading NCR's

   Bad wires 0 Accept. Reheads 0 Total Ineffective wires 0

5. Date stressed 12-4-74 Stressing NCR's

   Date restressed Restressing NCR's

	SHOP END	FIELD END	TOTAL
Elongation (1500 psi to 80% ult.)-Pred./Act.	4⅛ / 14⅜	4⅛ / 14¼	8¼ / 18⅝
Lift-Off Pressure - Predicted/Actual	6840/6850	6800/6650	N/A
Shim Thickness/80% Ultimate Pressure	6¼ / 7790	6 / 7770	N/A

   Unseated/Broken Wires 0 Total effective wires after stressing 163

6. Date Bulk-filled 3-28-75 Bulk-Filling NCR's 1883

   Time since installation 10½ months Inlet Pressure 85 PSI Outlet Temp. 120°

   Date end caps refilled: Shop Field

7. Data compiled by D Walls Organization Salem

   Date 4/1/77

8. Additional Comments:

Florida Power CORPORATION

CRYSTAL RIVER UNIT NO. 3
REACTOR BUILDING PRESTRESSING SYSTEM
TENDON HISTORY

TENDON IDENTIFICATION NUMBER D338 CUT LENGTH 120'-2½"

SHOP WASHER ID: PC 121 CR 1105 FIELD WASHER ID: PC 121 CR 994

1. GAI/QA vendor inspection cover letter number-FPC # 10917 DATE 6/26/74

2. Date tendon received on-site 5-3-74 RMR Number 39132

3. Date installed in conduit 5-14-74 Installation NCR's 1371

   Wires removed 1 Wires replaced 0 Total Ineffective wires 1

4. Date buttonheaded 10-2-74 Buttonheading NCR's

   Bad wires 0 Accept. Reheads 0 Total Ineffective wires 0

5. Date stressed 11-18-74 Stressing NCR's

   Date restressed Restressing NCR's

	SHOP END	FIELD END	TOTAL
Elongation (1500 psi to 80% ult.)-Pred./Act.	3⅞ / 14¼	3⅞ / 13¾	7¾ / 8
Lift-Off Pressure - Predicted/Actual	6770/6800	6800/6850	N/A
Shim Thickness/80% Ultimate Pressure	6¾ / 7700	6 / 7750	N/A

   Unseated/Broken Wires 0 Total effective wires after stressing 162

6. Date Bulk-filled 3-28-75 Bulk-Filling NCR's

   Time since installation 10½ months Inlet Pressure 53 psi Outlet Temp. 130°

   Date end caps refilled: Shop Field

7. Data compiled by D. Waller Organization Salem

   Date 4/1/77

8. Additional Comments:

ATTACHMENT D – CR-N1002-010, "SQ11.1 RESTRESSING"

PSC Precision Surveillance Corporation	Crystal River Unit 3 8th Period (30th Year) Tendon Surveillance SQ 11.1 Restressing	DOCUMENT NO:	CR-N1002-010
		DOCUMENT TYPE:	ENG
		REVISION #	0
		SAFETY RELATED	
		NON-SAFETY RELATED	
		PAGE	1 OF 1
PREPARED BY: BAG	DATE: 07/09/07	REVIEWED BY: CEC	DATE: 08/02/07

The following program will calculate the PTF, OSF and elongation for given tendons by inputing the following information: tendon number, original number of wires, original predicted and actual liftoff pressures for both ends, original OSF, original elongation, first measure point plus second measure point.

Enter data only in the **WHITE** areas of the table, not in the **GREY** areas of the table.

INPUT INFORMATION

			Tendon 1	Tendon 2	Tendon 3	Tendon 4	Tendon 5
Tendon number			61V17	51H34	D238		
Number of original wires			163	163	163		
Original Liftoff Pressure (psi)	Shop End	Predicted	6870	6800	6800		
		Actual	6900	6800	7050		
	Field End	Predicted	N/A	6750	6840		
		Actual	N/A	6850	6800		
		Actual Average	6900	6825	6925		
Original Liftoff Forces(1) (kips)		Shop End	1641	1633	1694		
		Field End	N/A	1658	1624		
		Average	1641	1646	1659		
Original PTF(2) @ 1500 psi (kips)			357	362	359		
Original OSF(3) (kips)			1866	1866	1866		
Original elongation (inches)			11.75	10.25	8.25		
First measurement force (kips)			600	600	600		
Second measurement force (kips)			1200	1200	1200		

RESULTS

Tendon	PREVIOUSLY		AT RETENSIONING					Orig elong.
	Orig PTF	Orig OSF	Wires	New PTF	New OSF	600	1200	
61V17	357	1866	162	354	1855	1.92	6.62	11.75
			161	352	1843	1.95	6.68	
			160	350	1832	1.98	6.74	
51H34	362	1866	162	359	1855	1.65	5.76	10.25
			161	357	1843	1.67	5.81	
			160	355	1832	1.70	5.87	
D238	359	1866	162	357.1	1854.6	1.34	4.64	8.25
			161	354.9	1843.1	1.36	4.68	
			160	352.7	1831.7	1.38	4.73	

(1) Original Liftoff force calculated by: $0.7 * 240 \text{ ksi} * 0.05965 \text{ in2} * \text{No. of Wires} * \left[\frac{\text{Actual Liftoff Pressure}}{\text{Predicted Liftoff Pressure}} \right]$

(2) Original PTF calculated by: $1500 * \left[\frac{\text{Average Liftoff Force}}{\text{Average Liftoff Pressure}} \right]$

(3) Original OSF calcualted by: $0.8 * 240 \text{ ksi} * 0.05965 \text{ in2} * \text{No. of Wires}$

ATTACHMENT E – CR-N1002-020, SQ12.1 "GREASE VOID VOLUMES"

TENDON IDENTIFICATION #	NET DUCT VOLUME (GALLONS)	10% DUCT VOLUME (GALLONS)
61V24	144.09	14.41
12V01	143.97	14.40
12V02	144.12	14.41
45V19	144.51	14.45
45V20	144.47	14.45
45V21	144.05	14.40
61V16	144.36	14.44
61V17	144.74	14.47
61V18	144.15	14.42
34V16	145.50	14.55
34V17	145.67	14.57
34V18	144.97	14.50
13H35	121.77	12.18
13H36	121.67	12.17
13H37	122.18	12.22
42H45	121.40	12.14
42H46	122.57	12.26
42H47	121.84	12.18
46H20	121.37	12.14
46H21	122.06	12.21
46H22	122.43	12.24
51H33	121.94	12.19
51H34	120.88	12.09
51H35	122.21	12.22
62H29	121.93	12.19
62H30	121.75	12.17
62H31	122.13	12.21
46H06	122.00	12.20
46H07	121.18	12.12
46H08	121.46	12.15
D128	118.31	11.83
D129	116.41	11.64
D130	116.12	11.61
D211	115.58	11.56
D212	115.99	11.60
D213	116.85	11.69
D237	104.93	10.49
D238	102.59	10.26
D239	100.43	10.04
D336	107.62	10.76
D337	106.08	10.61
D338	103.92	10.39

PLANT:	CRYSTAL RIVER	UNIT:	N/A	SURVEILLANCE NUMBER:	8TH	YEAR:	35TH

TENDON GENERAL INFORMATION:

IDENTIFICATION #:	61V24	GROUP:	VERTICAL
# OF WIRES, N_s =	163	TAG LENGTH, L_{tl} (ft) =	188.5417
7mm WIRE AREA (in^2) =	0.05965	TOTAL WIRE AREA, A_s (in^2) =	9.72295

TENDON END SPECIFIC INPUT:	SHOP	FIELD
GREASE CAN LENGTH, L_{gc} (in) =	23.5	12.25
GREASE CAN INSIDE DIAMETER, D_{gc} (in) =	14.125	14.125
INITIAL TENDON SLACK, L_{ts} (in) =	5.125	
SHIM STACK HEIGHT, H_{ss} (in) =	13	4
POST TENSIONING SYSTEM SPECIFIC INPUT:	**SHOP**	**FIELD**
TRUMPLATE LENGTH, L_{tp} (in) =	69	39
TRUMPLATE INSIDE DIAMETER, D_{tp} (in) =	11	11
TRANSITION LENGTH, L_{tr} (in) =	2.25	2.25
TRANSITION/SHEATHING DIAMETER, D_{tr} (in) =	5	5
ANCHORHEAD THICKNESS, T_{ah} (in) =	6	
ANCHORHEAD DIAMETER, D_{ah} (in) =	10.5	
SHIM INSIDE DIAMETER, D_{si} (in) =	7	7
SHIM OUTSIDE DIAMETER, D_{so} (in) =	13.5	13.5

OUTPUT INFORMATION

DESCRIPTION	CALCULATION EQUATION	VOLUME (GALLONS)
GREASE CAN VOLUME, V_{gc} =	$\{(PI/4)*[(D_{gc,s})^2*(L_{gc,s})+(D_{gc,f})^2*(L_{gc,f})]\}/231$	24.25
TRUMPLATE VOLUME, V_{tp} =	$[((PI/4)*(D_{tp,s})^2*(L_{tp,s})-(L_{tp,s})*A_s)+((PI/4)*(D_{tp,f})^2*(L_{tp,f}))-(L_{tp,f})*A_s)]/231$	39.89
TRANSITION VOLUME, V_{tr} =	$(1/231)*\{1/3*L_{tr,s}\{(PI/4)[(D_{tp,s})^2+(D_{tr,s})^2]+[(PI/4)^2(D_{tp,s})^2(D_{tr,s})^2]^{1/2}\}+1/3*L_{tr,f}\{(PI/4)[(D_{tp,f})^2+(D_{tr,f})^2]+[(PI/4)^2(D_{tp,f})^2(D_{tr,f})^2]^{1/2}\}-\{(L_{tr,s}+L_{tr,f})*A_s\}\}$	0.84
SHEATHING VOLUME, V_{sh} =	$\{[(PI/4)*(D_{tr})^2-A_s]*[(12*L_{tl})-(L_{tp,s}+L_{tp,f}+L_{tr,s}+L_{tr,f}+L_{ts})]\}/231$	92.03
A-HEAD VOLUME, V_{ah} =	$\{(PI/4)*((D_{ah})^2*(T_{ah}))*2\}/231$	4.50
SHIM VOLUME, V_{sh} =	$\{[(PI/4)*\{(Dso)^2-(D_{si})^2\}+A_s]*(H_{ss,s}+H_{ss,f})\}/231$	8.42
NET DUCT VOLUME, V_T =	$V_{gc}+V_{tp}+V_{ah}+V_{tr}-(V_{ah}+V_{sh})$	**144.09**

PSC Precision Surveillance Corporation	Crystal River Unit 3 8th Period (35th Year) Tendon Surveillance SQ 12.2 Grease Void Volumes	DOCUMENT NO:	CR-N1002-020
		DOCUMENT TYPE:	ENG
		REVISION #	0
		SAFETY RELATED	
		NON-SAFETY RELATED	
		PAGE 3 OF 43	
	PREPARED BY: BAG DATE: 07/10/07	REVIEWED BY: CEC	DATE: 08/02/07

PLANT:	CRYSTAL RIVER	UNIT:	N/A	SURVEILLANCE NUMBER:	8TH	YEAR:	35TH

TENDON GENERAL INFORMATION:

IDENTIFICATION #:	12V01	GROUP:	VERTICAL
# OF WIRES, N_s =	163	TAG LENGTH, L_{tl} (ft) =	188.5208
7mm WIRE AREA (in^2) =	0.05965	TOTAL WIRE AREA, A_s (in^2) =	9.72295

TENDON END SPECIFIC INPUT:	SHOP	FIELD
GREASE CAN LENGTH, L_{gc} (in) =	23.5	12.25
GREASE CAN INSIDE DIAMETER, D_{gc} (in) =	14.125	14.125
INITIAL TENDON SLACK, L_{ts} (in) =	4.75	
SHIM STACK HEIGHT, H_{ss} (in) =	13.25	4
POST TENSIONING SYSTEM SPECIFIC INPUT:	**SHOP**	**FIELD**
TRUMPLATE LENGTH, L_{tp} (in) =	69	39
TRUMPLATE INSIDE DIAMETER, D_{tp} (in) =	11	11
TRANSITION LENGTH, L_{tr} (in) =	2.25	2.25
TRANSITION/SHEATHING DIAMETER, D_{tr} (in) =	5	5
ANCHORHEAD THICKNESS, T_{ah} (in) =	6	
ANCHORHEAD DIAMETER, D_{ah} (in) =	10.5	
SHIM INSIDE DIAMETER, D_{si} (in) =	7	7
SHIM OUTSIDE DIAMETER, D_{so} (in) =	13.5	13.5

OUTPUT INFORMATION

DESCRIPTION	CALCULATION EQUATION	VOLUME (GALLONS)
GREASE CAN VOLUME, V_{gc} =	$\{(PI/4)*[(D_{gc,s})^2*(L_{gc,s})+(D_{gc,f})^2*(L_{gc,f})]\}/231$	24.25
TRUMPLATE VOLUME, V_{tp} =	$[((PI/4)*(D_{tp,s})^2*(L_{tp,s})-(L_{tp,s})*A_s)+((PI/4)*(D_{tp,f})^2*(L_{tp,f}))-(L_{tp,f})*A_s)]/231$	39.89
TRANSITION VOLUME, V_{tr} =	$(1/231)*\{1/3*L_{tr,s}\{(PI/4)[(D_{tp,s})^2+(D_{tr,s})^2]+[(PI/4)^2(D_{tp,s})^2(D_{tr,s})^2]^{1/2}\}+1/3*L_{tr,f}\{(PI/4)[(D_{tp,f})^2+(D_{tr,f})^2]+[(PI/4)^2(D_{tp,f})^2(D_{tr,f})^2]^{1/2}\}-\{(L_{tr,s}+L_{tr,f})*A_s\}\}$	0.84
SHEATHING VOLUME, V_{sh} =	$\{[(PI/4)*(D_{tr})^2-A_s]*[(12*L_{tl})-(L_{tp,s}+L_{tp,f}+L_{tr,s}+L_{tr,f}+L_{ts})]\}/231$	92.04
A-HEAD VOLUME, V_{ah} =	$\{(PI/4)*((D_{ah})^2*(T_{ah}))*2\}/231$	4.50
SHIM VOLUME, V_{sh} =	$\{[(PI/4)*\{(Dso)^2-(D_{si})^2\}+A_s]*(H_{ss,s}+H_{ss,f})\}/231$	8.54
NET DUCT VOLUME, V_T =	$V_{gc}+V_{tp}+V_{sh}+V_{tr}-(V_{ah}+V_{sh})$	**143.97**

PLANT:	CRYSTAL RIVER	UNIT:	N/A	SURVEILLANCE NUMBER:	8TH	YEAR:	35TH

TENDON GENERAL INFORMATION:

IDENTIFICATION #:	12V02	GROUP:	VERTICAL
# OF WIRES, N_s =	163	TAG LENGTH, L_{tl} (ft) =	188.5417
7mm WIRE AREA (in^2) =	0.05965	TOTAL WIRE AREA, A_s (in^2) =	9.72295

TENDON END SPECIFIC INPUT:	SHOP	FIELD
GREASE CAN LENGTH, L_{gc} (in) =	23.5	12.25
GREASE CAN INSIDE DIAMETER, D_{gc} (in) =	14.125	14.125
INITIAL TENDON SLACK, L_{ts} (in) =	4.5	
SHIM STACK HEIGHT, H_{ss} (in) =	13	4
POST TENSIONING SYSTEM SPECIFIC INPUT:	**SHOP**	**FIELD**
TRUMPLATE LENGTH, L_{tp} (in) =	69	39
TRUMPLATE INSIDE DIAMETER, D_{tp} (in) =	11	11
TRANSITION LENGTH, L_{tr} (in) =	2.25	2.25
TRANSITION/SHEATHING DIAMETER, D_{tr} (in) =	5	5
ANCHORHEAD THICKNESS, T_{ah} (in) =	6	
ANCHORHEAD DIAMETER, D_{ah} (in) =	10.5	
SHIM INSIDE DIAMETER, D_{si} (in) =	7	7
SHIM OUTSIDE DIAMETER, D_{so} (in) =	13.5	13.5

OUTPUT INFORMATION

DESCRIPTION	CALCULATION EQUATION	VOLUME (GALLONS)
GREASE CAN VOLUME, V_{gc} =	$\{(PI/4)*[(D_{gc,s})^2*(L_{gc,s})+(D_{gc,f})^2*(L_{gc,f})]\}/231$	24.25
TRUMPLATE VOLUME, V_{tp} =	$[((PI/4)*(D_{tp,s})^2*(L_{tp,s})-(L_{tp,s})*A_s)+((PI/4)*(D_{tp,f})^2*(L_{tp,f}))-(L_{tp,f})*A_s)]/231$	39.89
TRANSITION VOLUME, V_{tr} =	$(1/231)*\{1/3*L_{tr,s}\{(PI/4)[(D_{tp,s})^2+(D_{tr,s})^2]+[(PI/4)^2(D_{tp,s})^2(D_{tr,s})^2]^{1/2}\}+1/3*L_{tr,f}\{(PI/4)[(D_{tp,f})^2+(D_{tr,f})^2]+[(PI/4)^2(D_{tp,f})^2(D_{tr,f})^2]^{1/2}\}-\{(L_{tr,s}+L_{tr,f})*A_s\}\}$	0.84
SHEATHING VOLUME, V_{sh} =	$\{[(PI/4)*(D_{tr})^2-A_s]*[(12*L_{tl})-(L_{tp,s}+L_{tp,f}+L_{tr,s}+L_{tr,f}+L_{ts})]\}/231$	92.06
A-HEAD VOLUME, V_{ah} =	$\{(PI/4)*((D_{ah})^2*(T_{ah}))*2\}/231$	4.50
SHIM VOLUME, V_{sh} =	$\{[(PI/4)*\{(Dso)^2-(D_{si})^2\}+A_s]*(H_{ss,s}+H_{ss,f})\}/231$	8.42
NET DUCT VOLUME, V_T =	$V_{gc}+V_{tp}+V_{sh}+V_{tr}-(V_{ah}+V_{sh})$	**144.12**

PLANT:	CRYSTAL RIVER	UNIT:	N/A	SURVEILLANCE NUMBER:	8TH	YEAR:	35TH

TENDON GENERAL INFORMATION:

IDENTIFICATION #:	45V19	GROUP:	VERTICAL
# OF WIRES, N_s =	163	TAG LENGTH, L_{tl} (ft) =	188.6667
7mm WIRE AREA (in^2) =	0.05965	TOTAL WIRE AREA, A_s (in^2) =	9.72295

TENDON END SPECIFIC INPUT:	SHOP	FIELD
GREASE CAN LENGTH, L_{gc} (in) =	23.5	12.25
GREASE CAN INSIDE DIAMETER, D_{gc} (in) =	14.125	14.125
INITIAL TENDON SLACK, L_{ts} (in) =	4	
SHIM STACK HEIGHT, H_{ss} (in) =	12.375	4
POST TENSIONING SYSTEM SPECIFIC INPUT:	**SHOP**	**FIELD**
TRUMPLATE LENGTH, L_{tp} (in) =	69	39
TRUMPLATE INSIDE DIAMETER, D_{tp} (in) =	11	11
TRANSITION LENGTH, L_{tr} (in) =	2.25	2.25
TRANSITION/SHEATHING DIAMETER, D_{tr} (in) =	5	5
ANCHORHEAD THICKNESS, T_{ah} (in) =	6	
ANCHORHEAD DIAMETER, D_{ah} (in) =	10.5	
SHIM INSIDE DIAMETER, D_{si} (in) =	7	7
SHIM OUTSIDE DIAMETER, D_{so} (in) =	13.5	13.5

OUTPUT INFORMATION

DESCRIPTION	CALCULATION EQUATION	VOLUME (GALLONS)
GREASE CAN VOLUME, V_{gc} =	$\{(PI/4)*[(D_{gc,s})^2*(L_{gc,s})+(D_{gc,f})^2*(L_{gc,f})]\}/231$	24.25
TRUMPLATE VOLUME, V_{tp} =	$[((PI/4)*(D_{tp,s})^2*(L_{tp,s})-(L_{tp,s})*A_s)+((PI/4)*(D_{tp,f})^2*(L_{tp,f})-(L_{tp,f})*A_s)]/231$	39.89
TRANSITION VOLUME, V_{tr} =	$(1/231)*\{1/3*L_{tr,s}\{(PI/4)[(D_{tp,s})^2+(D_{tr,s})^2]+[(PI/4)^2(D_{tp,s})^2(D_{tr,s})^2]^{1/2}\}+1/3*L_{tr,f}\{(PI/4)[(D_{tp,f})^2+(D_{tr,f})^2]+[(PI/4)^2(D_{tp,f})^2(D_{tr,f})^2]^{1/2}\}-\{(L_{tr,s}+L_{tr,f})*A_s\}\}$	0.84
SHEATHING VOLUME, V_{sh} =	$\{[(PI/4)*(D_{tr})^2-A_s]*[(12*L_{tl})-(L_{tp,s}+L_{tp,f}+L_{tr,s}+L_{tr,f}+L_{ts})]\}/231$	92.15
A-HEAD VOLUME, V_{ah} =	$\{(PI/4)*((D_{ah})^2*(T_{ah}))*2\}/231$	4.50
SHIM VOLUME, V_{sh} =	$\{[(PI/4)*\{(Dso)^2-(D_{si})^2\}+A_s]*(H_{ss,s}+H_{ss,f})\}/231$	8.11
NET DUCT VOLUME, V_T =	$V_{gc}+V_{tp}+V_{sh}+V_{tr}-(V_{ah}+V_{sh})$	**144.51**

PLANT:	CRYSTAL RIVER	UNIT:	N/A	SURVEILLANCE NUMBER:	8TH	YEAR:	35TH

TENDON GENERAL INFORMATION:

IDENTIFICATION #:	45V20	GROUP:	VERTICAL
# OF WIRES, N_s =	163	TAG LENGTH, L_{tl} (ft) =	188.5833
7mm WIRE AREA (in^2) =	0.05965	TOTAL WIRE AREA, A_s (in^2) =	9.72295

TENDON END SPECIFIC INPUT:	SHOP	FIELD
GREASE CAN LENGTH, L_{gc} (in) =	23.5	12.25
GREASE CAN INSIDE DIAMETER, D_{gc} (in) =	14.125	14.125
INITIAL TENDON SLACK, L_{ts} (in) =	4	
SHIM STACK HEIGHT, H_{ss} (in) =	12.375	4
POST TENSIONING SYSTEM SPECIFIC INPUT:	**SHOP**	**FIELD**
TRUMPLATE LENGTH, L_{tp} (in) =	69	39
TRUMPLATE INSIDE DIAMETER, D_{tp} (in) =	11	11
TRANSITION LENGTH, L_{tr} (in) =	2.25	2.25
TRANSITION/SHEATHING DIAMETER, D_{tr} (in) =	5	5
ANCHORHEAD THICKNESS, T_{ah} (in) =	6	
ANCHORHEAD DIAMETER, D_{ah} (in) =	10.5	
SHIM INSIDE DIAMETER, D_{si} (in) =	7	7
SHIM OUTSIDE DIAMETER, D_{so} (in) =	13.5	13.5

OUTPUT INFORMATION

DESCRIPTION	CALCULATION EQUATION	VOLUME (GALLONS)
GREASE CAN VOLUME, V_{gc} =	$\{(PI/4)*[(D_{gc,s})^2*(L_{gc,s})+(D_{gc,f})^2*(L_{gc,f})]\}/231$	24.25
TRUMPLATE VOLUME, V_{tp} =	$[((PI/4)*(D_{tp,s})^2*(L_{tp,s})-(L_{tp,s})*A_s)+((PI/4)*(D_{tp,f})^2*(L_{tp,f}))-(L_{tp,f})*A_s)]/231$	39.89
TRANSITION VOLUME, V_{tr} =	$(1/231)*\{1/3*L_{tr,s}\{(PI/4)[(D_{tp,s})^2+(D_{tr,s})^2]+[(PI/4)^2(D_{tp,s})^2(D_{tr,s})^2]^{1/2}\}+1/3*L_{tr,f}\{(PI/4)[(D_{tp,f})^2+(D_{tr,f})^2]+[(PI/4)^2(D_{tp,f})^2(D_{tr,f})^2]^{1/2}\}-\{(L_{tr,s}+L_{tr,f})*A_s\}\}$	0.84
SHEATHING VOLUME, V_{sh} =	$\{[(PI/4)*(D_{tr})^2-A_s]*[(12*L_{tl})-(L_{tp,s}+L_{tp,f}+L_{tr,s}+L_{tr,f}+L_{ts})]\}/231$	92.10
A-HEAD VOLUME, V_{ah} =	$\{(PI/4)*((D_{ah})^2*(T_{ah}))*2\}/231$	4.50
SHIM VOLUME, V_{sh} =	$\{[(PI/4)*\{(Dso)^2-(D_{si})^2\}+A_s]*(H_{ss,s}+H_{ss,f})\}/231$	8.11
NET DUCT VOLUME, V_T =	$V_{gc}+V_{tp}+V_{sh}+V_{tr}-(V_{ah}+V_{sh})$	**144.47**

PSC Prestress Surveillance Corporation	Crystal River Unit 3 8th Period (35th Year) Tendon Surveillance SQ 12.2 Grease Void Volumes	DOCUMENT NO:	CR-N1002-020
		DOCUMENT TYPE:	ENG
		REVISION #	0
		SAFETY RELATED	
		NON-SAFETY RELATED	
		PAGE 7 OF 43	
	PREPARED BY: BAG DATE: 07/10/07	REVIEWED BY: CEC DATE: 08/02/07	

PLANT:	CRYSTAL RIVER	UNIT:	N/A	SURVEILLANCE NUMBER:	8TH	YEAR:	35TH

TENDON GENERAL INFORMATION:

IDENTIFICATION #:	45V21	GROUP:	VERTICAL
# OF WIRES, N_s =	163	TAG LENGTH, L_{tl} (ft) =	188.6667
7mm WIRE AREA (in^2) =	0.05965	TOTAL WIRE AREA, A_s (in^2) =	9.72295

TENDON END SPECIFIC INPUT:	SHOP	FIELD
GREASE CAN LENGTH, L_{gc} (in) =	23.5	12.25
GREASE CAN INSIDE DIAMETER, D_{gc} (in) =	14.125	14.125
INITIAL TENDON SLACK, L_{ts} (in) =	5.4375	
SHIM STACK HEIGHT, H_{ss} (in) =	13.1875	4
POST TENSIONING SYSTEM SPECIFIC INPUT:	**SHOP**	**FIELD**
TRUMPLATE LENGTH, L_{tp} (in) =	69	39
TRUMPLATE INSIDE DIAMETER, D_{tp} (in) =	11	11
TRANSITION LENGTH, L_{tr} (in) =	2.25	2.25
TRANSITION/SHEATHING DIAMETER, D_{tr} (in) =	5	5
ANCHORHEAD THICKNESS, T_{ah} (in) =	6	
ANCHORHEAD DIAMETER, D_{ah} (in) =	10.5	
SHIM INSIDE DIAMETER, D_{si} (in) =	7	7
SHIM OUTSIDE DIAMETER, D_{so} (in) =	13.5	13.5

OUTPUT INFORMATION

DESCRIPTION	CALCULATION EQUATION	VOLUME (GALLONS)
GREASE CAN VOLUME, V_{gc} =	$\{(PI/4)*[(D_{gc,s})^2*(L_{gc,s})+(D_{gc,f})^2*(L_{gc,f})]\}/231$	24.25
TRUMPLATE VOLUME, V_{tp} =	$[((PI/4)*(D_{tp,s})^2*(L_{tp,s})-(L_{tp,s})*A_s)+((PI/4)*(D_{tp,f})^2*(L_{tp,f}))-(L_{tp,f})*A_s)]/231$	39.89
TRANSITION VOLUME, V_{tr} =	$(1/231)*\{1/3*L_{tr,s}\{(PI/4)[(D_{tp,s})^2+(D_{tr,s})^2]+[(PI/4)^2(D_{tp,s})^2(D_{tr,s})^2]^{1/2}\}+1/3*L_{tr,f}\{(PI/4)[(D_{tp,f})^2+(D_{tr,f})^2]+[(PI/4)^2(D_{tp,f})^2(D_{tr,f})^2]^{1/2}\}-\{(L_{tr,s}+L_{tr,f})*A_s\}\}$	0.84
SHEATHING VOLUME, V_{sh} =	$\{[(PI/4)*(D_{tr})^2-A_s]*[(12*L_{tl})-(L_{tp,s}+L_{tp,f}+L_{tr,s}+L_{tr,f}+L_{ts})]\}/231$	92.09
A-HEAD VOLUME, V_{ah} =	$\{(PI/4)*((D_{ah})^2*(T_{ah}))*2\}/231$	4.50
SHIM VOLUME, V_{sh} =	$\{[(PI/4)*\{(Dso)^2-(D_{si})^2\}+A_s]*(H_{ss,s}+H_{ss,f})\}/231$	8.51
NET DUCT VOLUME, V_T =	$V_{gc}+V_{tp}+V_{sh}+V_{tr}-(V_{ah}+V_{sh})$	**144.05**

PLANT:	CRYSTAL RIVER	UNIT:	N/A	SURVEILLANCE NUMBER:	8TH	YEAR:	35TH

TENDON GENERAL INFORMATION:

IDENTIFICATION #:	61V16	GROUP:	VERTICAL
# OF WIRES, N_s =	163	TAG LENGTH, L_{tl} (ft) =	189.0000
7mm WIRE AREA (in^2) =	0.05965	TOTAL WIRE AREA, A_s (in^2) =	9.72295

TENDON END SPECIFIC INPUT:	SHOP	FIELD
GREASE CAN LENGTH, L_{gc} (in) =	23.5	12.25
GREASE CAN INSIDE DIAMETER, D_{gc} (in) =	14.125	14.125
INITIAL TENDON SLACK, L_{ts} (in) =	4.25	
SHIM STACK HEIGHT, H_{ss} (in) =	13	4
POST TENSIONING SYSTEM SPECIFIC INPUT:	**SHOP**	**FIELD**
TRUMPLATE LENGTH, L_{tp} (in) =	69	39
TRUMPLATE INSIDE DIAMETER, D_{tp} (in) =	11	11
TRANSITION LENGTH, L_{tr} (in) =	2.25	2.25
TRANSITION/SHEATHING DIAMETER, D_{tr} (in) =	5	5
ANCHORHEAD THICKNESS, T_{ah} (in) =	6	
ANCHORHEAD DIAMETER, D_{ah} (in) =	10.5	
SHIM INSIDE DIAMETER, D_{si} (in) =	7	7
SHIM OUTSIDE DIAMETER, D_{so} (in) =	13.5	13.5

OUTPUT INFORMATION

DESCRIPTION	CALCULATION EQUATION	VOLUME (GALLONS)
GREASE CAN VOLUME, V_{gc} =	$\{(PI/4)*[(D_{gc,s})^2*(L_{gc,s})+(D_{gc,f})^2*(L_{gc,f})]\}/231$	24.25
TRUMPLATE VOLUME, V_{tp} =	$[((PI/4)*(D_{tp,s})^2*(L_{tp,s})-(L_{tp,s})*A_s)+((PI/4)*(D_{tp,f})^2*(L_{tp,f}))-(L_{tp,f})*A_s)]/231$	39.89
TRANSITION VOLUME, V_{tr} =	$(1/231)*\{1/3*L_{tr,s}\{(PI/4)[(D_{tp,s})^2+(D_{tr,s})^2]+[(PI/4)^2(D_{tp,s})^2(D_{tr,s})^2]^{1/2}\}+1/3*L_{tr,f}\{(PI/4)[(D_{tp,f})^2+(D_{tr,f})^2]+[(PI/4)^2(D_{tp,f})^2(D_{tr,f})^2]^{1/2}\}-\{(L_{tr,s}+L_{tr,f})*A_s\}\}$	0.84
SHEATHING VOLUME, V_{sh} =	$\{[(PI/4)*(D_{tr})^2-A_s]*[(12*L_{ts})-(L_{tp,s}+L_{tp,f}+L_{tr,s}+L_{tr,f}+L_{ts})]\}/231$	92.31
A-HEAD VOLUME, V_{ah} =	$\{(PI/4)*((D_{ah})^2*(T_{ah}))*2\}/231$	4.50
SHIM VOLUME, V_{sh} =	$\{[(PI/4)*\{(Dso)^2-(D_{si})^2\}+A_s]*(H_{ss,s}+H_{ss,f})\}/231$	8.42
NET DUCT VOLUME, V_T =	$V_{gc}+V_{tp}+V_{sh}+V_{tr}-(V_{ah}+V_{sh})$	**144.36**

PLANT:	CRYSTAL RIVER	UNIT:	N/A	SURVEILLANCE NUMBER:	8TH	YEAR:	35TH

TENDON GENERAL INFORMATION:

IDENTIFICATION #:	61V17	GROUP:	VERTICAL
# OF WIRES, N_s =	163	TAG LENGTH, L_{tl} (ft) =	188.7708
7mm WIRE AREA (in^2) =	0.05965	TOTAL WIRE AREA, A_s (in^2) =	9.72295

TENDON END SPECIFIC INPUT:	SHOP	FIELD
GREASE CAN LENGTH, L_{gc} (in) =	23.5	12.25
GREASE CAN INSIDE DIAMETER, D_{gc} (in) =	14.125	14.125
INITIAL TENDON SLACK, L_{tx} (in) =	4.25	
SHIM STACK HEIGHT, H_{ss} (in) =	12	4
POST TENSIONING SYSTEM SPECIFIC INPUT:	**SHOP**	**FIELD**
TRUMPLATE LENGTH, L_{tp} (in) =	69	39
TRUMPLATE INSIDE DIAMETER, D_{tp} (in) =	11	11
TRANSITION LENGTH, L_{tr} (in) =	2.25	2.25
TRANSITION/SHEATHING DIAMETER, D_{tr} (in) =	5	5
ANCHORHEAD THICKNESS, T_{ah} (in) =	6	
ANCHORHEAD DIAMETER, D_{ah} (in) =	10.5	
SHIM INSIDE DIAMETER, D_{si} (in) =	7	7
SHIM OUTSIDE DIAMETER, D_{so} (in) =	13.5	13.5

OUTPUT INFORMATION

DESCRIPTION	CALCULATION EQUATION	VOLUME (GALLONS)
GREASE CAN VOLUME, V_{gc} =	$\{(PI/4)*[(D_{gc,s})^2*(L_{gc,s})+(D_{gc,f})^2*(L_{gc,f})]\}/231$	24.25
TRUMPLATE VOLUME, V_{tp} =	$[((PI/4)*(D_{tp,s})^2*(L_{tp,s})-(L_{tp,s})*A_s)+((PI/4)*(D_{tp,f})^2*(L_{tp,f}))-(L_{tp,f})*A_s)]/231$	39.89
TRANSITION VOLUME, V_{tr} =	$(1/231)*\{1/3*L_{tr,s}\{(PI/4)[(D_{tp,s})^2+(D_{tr,s})^2]+[(PI/4)^2(D_{tp,s})^2(D_{tr,s})^2]^{1/2}\}+1/3*L_{tr,f}\{(PI/4)[(D_{tp,f})^2+(D_{tr,f})^2]+[(PI/4)^2(D_{tp,f})^2(D_{tr,f})^2]^{1/2}\}-\{(L_{tr,s}+L_{tr,f})*A_s\}\}$	0.84
SHEATHING VOLUME, V_{sh} =	$\{[(PI/4)*(D_{tr})^2-A_s]*[(12*L_d)-(L_{tp,s}+L_{tp,f}+L_{tr,s}+L_{tr,f}+L_{tx})]\}/231$	92.19
A-HEAD VOLUME, V_{ah} =	$\{(PI/4)*((D_{ah})^2*(T_{ah}))*2\}/231$	4.50
SHIM VOLUME, V_{sh} =	$\{[(PI/4)*\{(Dso)^2-(D_{si})^2\}+A_s]*(H_{ss,s}+H_{ss,f})\}/231$	7.92
NET DUCT VOLUME, V_T =	$V_{gc}+V_{tp}+V_{sh}+V_{tr}-(V_{ah}+V_{sh})$	**144.74**

PLANT:	CRYSTAL RIVER	UNIT:	N/A	SURVEILLANCE NUMBER:	8TH	YEAR:	35TH

TENDON GENERAL INFORMATION:

IDENTIFICATION #:	61V18	GROUP:	VERTICAL
# OF WIRES, N_s =	163	TAG LENGTH, L_{tl} (ft) =	188.6875
7mm WIRE AREA (in^2) =	0.05965	TOTAL WIRE AREA, A_s (in^2) =	9.72295

TENDON END SPECIFIC INPUT:	SHOP	FIELD
GREASE CAN LENGTH, L_{gc} (in) =	23.5	12.25
GREASE CAN INSIDE DIAMETER, D_{gc} (in) =	14.125	14.125
INITIAL TENDON SLACK, L_{ts} (in) =	5.5	
SHIM STACK HEIGHT, H_{ss} (in) =	13	4
POST TENSIONING SYSTEM SPECIFIC INPUT:	**SHOP**	**FIELD**
TRUMPLATE LENGTH, L_{tp} (in) =	69	39
TRUMPLATE INSIDE DIAMETER, D_{tp} (in) =	11	11
TRANSITION LENGTH, L_{tr} (in) =	2.25	2.25
TRANSITION/SHEATHING DIAMETER, D_{tr} (in) =	5	5
ANCHORHEAD THICKNESS, T_{ah} (in) =	6	
ANCHORHEAD DIAMETER, D_{ah} (in) =	10.5	
SHIM INSIDE DIAMETER, D_{si} (in) =	7	7
SHIM OUTSIDE DIAMETER, D_{so} (in) =	13.5	13.5

OUTPUT INFORMATION

DESCRIPTION	CALCULATION EQUATION	VOLUME (GALLONS)
GREASE CAN VOLUME, V_{gc} =	$\{(PI/4)*[(D_{gc,s})^2*(L_{gc,s})+(D_{gc,f})^2*(L_{gc,f})]\}/231$	24.25
TRUMPLATE VOLUME, V_{tp} =	$[((PI/4)*(D_{tp,s})^2*(L_{tp,s})-(L_{tp,s})*A_s)+((PI/4)*(D_{tp,f})^2*(L_{tp,f}))-(L_{tp,f})*A_s)]/231$	39.89
TRANSITION VOLUME, V_{tr} =	$(1/231)*\{1/3*L_{tr,s}\{(PI/4)[(D_{tp,s})^2+(D_{tr,s})^2]+[(PI/4)^2(D_{tp,s})^2(D_{tr,s})^2]^{1/2}\}+1/3*L_{tr,f}\{(PI/4)[(D_{tp,f})^2+(D_{tr,f})^2]+[(PI/4)^2(D_{tp,f})^2(D_{tr,f})^2]^{1/2}\}-\{(L_{tr,s}+L_{tr,f})*A_s\}\}$	0.84
SHEATHING VOLUME, V_{sh} =	$\{[(PI/4)*(D_s)^2-A_s]*[(12*L_{tl})-(L_{tp,s}+L_{tp,f}+L_{tr,s}+L_{tr,f}+L_{ts})]\}/231$	92.09
A-HEAD VOLUME, V_{ah} =	$\{(PI/4)*((D_{ah})^2*(T_{ah}))*2\}/231$	4.50
SHIM VOLUME, V_{sh} =	$\{[(PI/4)*\{(Dso)^2-(D_{si})^2\}+A_s]*(H_{ss,s}+H_{ss,f})\}/231$	8.42
NET DUCT VOLUME, V_T =	$V_{gc}+V_{tp}+V_{sh}+V_{tr}-(V_{sh}+V_{sh})$	**144.15**

PLANT:	CRYSTAL RIVER	UNIT:	N/A	SURVEILLANCE NUMBER:	8TH	YEAR:	35TH

TENDON GENERAL INFORMATION:

IDENTIFICATION #:	34V16	GROUP:	VERTICAL
# OF WIRES, N_s =	163	TAG LENGTH, L_{tl} (ft) =	189.2292
7mm WIRE AREA (in^2) =	0.05965	TOTAL WIRE AREA, A_s (in^2) =	9.72295

TENDON END SPECIFIC INPUT:	SHOP	FIELD
GREASE CAN LENGTH, L_{gc} (in) =	23.5	12.25
GREASE CAN INSIDE DIAMETER, D_{gc} (in) =	14.125	14.125
INITIAL TENDON SLACK, L_{ts} (in) =	3.625	
SHIM STACK HEIGHT, H_{ss} (in) =	11	4
POST TENSIONING SYSTEM SPECIFIC INPUT:	**SHOP**	**FIELD**
TRUMPLATE LENGTH, L_{tp} (in) =	69	39
TRUMPLATE INSIDE DIAMETER, D_{tp} (in) =	11	11
TRANSITION LENGTH, L_{tr} (in) =	2.25	2.25
TRANSITION/SHEATHING DIAMETER, D_{tr} (in) =	5	5
ANCHORHEAD THICKNESS, T_{ah} (in) =	6	
ANCHORHEAD DIAMETER, D_{ah} (in) =	10.5	
SHIM INSIDE DIAMETER, D_{si} (in) =	7	7
SHIM OUTSIDE DIAMETER, D_{so} (in) =	13.5	13.5

OUTPUT INFORMATION

DESCRIPTION	CALCULATION EQUATION	VOLUME (GALLONS)
GREASE CAN VOLUME, V_{gc} =	$\{(PI/4)*[(D_{gc,s})^2*(L_{gc,s})+(D_{gc,f})^2*(L_{gc,f})]\}/231$	24.25
TRUMPLATE VOLUME, V_{tp} =	$[((PI/4)*(D_{tp,s})^2*(L_{tp,s})-(L_{tp,s})*A_s)+((PI/4)*(D_{tp,f})^2*(L_{tp,f}))-(L_{tp,f})*A_s)]/231$	39.89
TRANSITION VOLUME, V_{tr} =	$(1/231)*\{1/3*L_{tr,s}\{(PI/4)[(D_{tp,s})^2+(D_{tr,s})^2]+[(PI/4)^2(D_{tp,s})^2(D_{tr,s})^2]^{1/2}\}+1/3*L_{tr,f}\{(PI/4)[(D_{tp,f})^2+(D_{tr,f})^2]+[(PI/4)^2(D_{tp,f})^2(D_{tr,f})^2]^{1/2}\}-\{(L_{tr,s}+L_{tr,f})*A_s\}\}$	0.84
SHEATHING VOLUME, V_{sh} =	$\{[(PI/4)*(D_s)^2-A_s]*[(12*L_{tl})-(L_{tp,s}+L_{tp,f}+L_{tr,s}+L_{tr,f}+L_{ts})]\}/231$	92.45
A-HEAD VOLUME, V_{ah} =	$\{(PI/4)*((D_{ah})^2*(T_{ah}))*2\}/231$	4.50
SHIM VOLUME, V_{sh} =	$\{[(PI/4)*((Dso)^2-(D_{si})^2]+A_s]*(H_{ss,s}+H_{ss,f})\}/231$	7.43
NET DUCT VOLUME, V_T =	$V_{gc}+V_{tp}+V_{sh}+V_{tr}-(V_{ah}+V_{sh})$	**145.50**

PLANT:	CRYSTAL RIVER	UNIT:	N/A	SURVEILLANCE NUMBER:	8TH	YEAR:	35TH

TENDON GENERAL INFORMATION:

IDENTIFICATION #:	34V17		GROUP:	VERTICAL
# OF WIRES, N_s =	163		TAG LENGTH, L_{tl} (ft) =	188.8958
7mm WIRE AREA (in^2) =	0.05965		TOTAL WIRE AREA, A_s (in^2) =	9.72295

TENDON END SPECIFIC INPUT:	SHOP	FIELD
GREASE CAN LENGTH, L_{gc} (in) =	23.5	12.25
GREASE CAN INSIDE DIAMETER, D_{gc} (in) =	14.125	14.125
INITIAL TENDON SLACK, L_{ts} (in) =	2.875	
SHIM STACK HEIGHT, H_{ss} (in) =	10.375	4
POST TENSIONING SYSTEM SPECIFIC INPUT:	**SHOP**	**FIELD**
TRUMPLATE LENGTH, L_{tp} (in) =	69	39
TRUMPLATE INSIDE DIAMETER, D_{tp} (in) =	11	11
TRANSITION LENGTH, L_{tr} (in) =	2.25	2.25
TRANSITION/SHEATHING DIAMETER, D_{tr} (in) =	5	5
ANCHORHEAD THICKNESS, T_{ah} (in) =	6	
ANCHORHEAD DIAMETER, D_{ah} (in) =	10.5	
SHIM INSIDE DIAMETER, D_{si} (in) =	7	7
SHIM OUTSIDE DIAMETER, D_{so} (in) =	13.5	13.5

OUTPUT INFORMATION

DESCRIPTION	CALCULATION EQUATION	VOLUME (GALLONS)
GREASE CAN VOLUME, V_{gc} =	$\{(PI/4)*[(D_{gc,s})^2*(L_{gc,s})+(D_{gc,f})^2*(L_{gc,f})]\}/231$	24.25
TRUMPLATE VOLUME, V_{tp} =	$[((PI/4)*(D_{tp,s})^2*(L_{tp,s})-(L_{tp,s})*A_s)+((PI/4)*(D_{tp,f})^2*(L_{tp,f})-(L_{tp,f})*A_s)]/231$	39.89
TRANSITION VOLUME, V_{tr} =	$(1/231)*\{1/3*L_{tr,s}\{(PI/4)[(D_{tp,s})^2+(D_{tr,s})^2]+[(PI/4)^2(D_{tp,s})^2(D_{tr,s})^2]^{1/2}\}+1/3*L_{tr,f}\{(PI/4)[(D_{tp,f})^2+(D_{tr,f})^2]+[(PI/4)^2(D_{tp,f})^2(D_{tr,f})^2]^{1/2}\}-\{(L_{tr,s}+L_{tr,f})*A_s\}\}$	0.84
SHEATHING VOLUME, V_{sh} =	$\{[(PI/4)*(D_{tr})^2-A_s]*[(12*L_{tl})-(L_{tp,s}+L_{tp,f}+L_{tr,s}+L_{tr,f}+L_{ts})]\}/231$	92.31
A-HEAD VOLUME, V_{ah} =	$\{(PI/4)*((D_{ah})^2*(T_{ah}))*2\}/231$	4.50
SHIM VOLUME, V_{sh} =	$\{[(PI/4)*((Dso)^2-(D_{si})^2)+A_s]*(H_{ss,s}+H_{ss,f})\}/231$	7.12
NET DUCT VOLUME, V_T =	$V_{gc}+V_{tp}+V_{sh}+V_{tr}-(V_{ah}+V_{sh})$	**145.67**

PLANT:	CRYSTAL RIVER	UNIT:	N/A	SURVEILLANCE NUMBER:	8TH	YEAR:	35TH

TENDON GENERAL INFORMATION:

IDENTIFICATION #:	34V18	GROUP:	VERTICAL
# OF WIRES, N_s =	163	TAG LENGTH, L_{tl} (ft) =	188.4792
7mm WIRE AREA (in^2) =	0.05965	TOTAL WIRE AREA, A_s (in^2) =	9.72295

TENDON END SPECIFIC INPUT:	SHOP	FIELD
GREASE CAN LENGTH, L_{gc} (in) =	23.5	12.25
GREASE CAN INSIDE DIAMETER, D_{gc} (in) =	14.125	14.125
INITIAL TENDON SLACK, L_{ts} (in) =	2.75	
SHIM STACK HEIGHT, H_{ss} (in) =	11.375	4
POST TENSIONING SYSTEM SPECIFIC INPUT:	**SHOP**	**FIELD**
TRUMPLATE LENGTH, L_{tp} (in) =	69	39
TRUMPLATE INSIDE DIAMETER, D_{tp} (in) =	11	11
TRANSITION LENGTH, L_{tr} (in) =	2.25	2.25
TRANSITION/SHEATHING DIAMETER, D_{tr} (in) =	5	5
ANCHORHEAD THICKNESS, T_{ah} (in) =	6	
ANCHORHEAD DIAMETER, D_{ah} (in) =	10.5	
SHIM INSIDE DIAMETER, D_{si} (in) =	7	7
SHIM OUTSIDE DIAMETER, D_{so} (in) =	13.5	13.5

OUTPUT INFORMATION

DESCRIPTION	CALCULATION EQUATION	VOLUME (GALLONS)
GREASE CAN VOLUME, V_{gc} =	$\{(PI/4)*[(D_{gc,s})^2*(L_{gc,s})+(D_{gc,f})^2*(L_{gc,f})]\}/231$	24.25
TRUMPLATE VOLUME, V_{tp} =	$[((PI/4)*(D_{tp,s})^2*(L_{tp,s})-(L_{tp,s})*A_s)+((PI/4)*(D_{tp,f})^2*(L_{tp,f}))-(L_{tp,f})*A_s)]/231$	39.89
TRANSITION VOLUME, V_{tr} =	$(1/231)*\{1/3*L_{tr,s}\{(PI/4)[(D_{tp,s})^2+(D_{tr,s})^2]+[(PI/4)^2(D_{tp,s})^2(D_{tr,s})^2]^{1/2}\}+1/3*L_{tr,f}\{(PI/4)[(D_{tp,f})^2+(D_{tr,f})^2]+[(PI/4)^2(D_{tp,f})^2(D_{tr,f})^2]^{1/2}\}-\{(L_{tr,s}+L_{tr,f})*A_s\}\}$	0.84
SHEATHING VOLUME, V_{sh} =	$\{[(PI/4)*(D_{tr})^2-A_s]*[(12*L_{tl})-(L_{tp,s}+L_{tp,f}+L_{tr,s}+L_{tr,f}+L_{ts})]\}/231$	92.10
A-HEAD VOLUME, V_{ah} =	$\{(PI/4)*((D_{ah})^2*(T_{ah}))*2\}/231$	4.50
SHIM VOLUME, V_{sh} =	$\{[(PI/4)*\{(Dso)^2-(D_{si})^2\}+A_s]*(H_{ss,s}+H_{ss,f})\}/231$	7.61
NET DUCT VOLUME, V_T =	$V_{gc}+V_{tp}+V_{sh}+V_{tr}-(V_{ah}+V_{sh})$	**144.97**

PLANT:	CRYSTAL RIVER	UNIT:	N/A	SURVEILLANCE NUMBER:	8TH	YEAR:	35TH

TENDON GENERAL INFORMATION:

IDENTIFICATION #:	13H35	GROUP:	HOOP
# OF WIRES, N_s =	163	TAG LENGTH, L_{tl} (ft) =	155.6250
7mm WIRE AREA (in^2) =	0.05965	TOTAL WIRE AREA, A_s (in^2) =	9.72295

TENDON END SPECIFIC INPUT:	SHOP	FIELD
GREASE CAN LENGTH, L_{gc} (in) =	15.25	15.25
GREASE CAN INSIDE DIAMETER, D_{gc} (in) =	14.125	14.125
INITIAL TENDON SLACK, L_{ts} (in) =	2.9375	
SHIM STACK HEIGHT, H_{ss} (in) =	6.5625	6.375
POST TENSIONING SYSTEM SPECIFIC INPUT:	**SHOP**	**FIELD**
TRUMPLATE LENGTH, L_{tp} (in) =	69	27
TRUMPLATE INSIDE DIAMETER, D_{tp} (in) =	11	11
TRANSITION LENGTH, L_{tr} (in) =	2.25	2.25
TRANSITION/SHEATHING DIAMETER, D_{tr} (in) =	5	5
ANCHORHEAD THICKNESS, T_{ah} (in) =	6	
ANCHORHEAD DIAMETER, D_{ah} (in) =	10.5	
SHIM INSIDE DIAMETER, D_{si} (in) =	7	7
SHIM OUTSIDE DIAMETER, D_{so} (in) =	13.5	13.5

OUTPUT INFORMATION

DESCRIPTION	CALCULATION EQUATION	VOLUME (GALLONS)
GREASE CAN VOLUME, V_{gc} =	$\{(PI/4)*[(D_{gc,s})^2*(L_{gc,s})+(D_{gc,f})^2*(L_{gc,f})]\}/231$	20.69
TRUMPLATE VOLUME, V_{tp} =	$[((PI/4)*(D_{tp,s})^2*(L_{tp,s})-(L_{tp,s})*A_s)+((PI/4)*(D_{tp,f})^2*(L_{tp,f}))-(L_{tp,f})*A_s)]/231$	35.45
TRANSITION VOLUME, V_{tr} =	$(1/231)*\{1/3*L_{tr,s}\{(PI/4)[(D_{tp,s})^2+(D_{tr,s})^2]+[(PI/4)^2(D_{tp,s})^2(D_{tr,s})^2]^{1/2}\}+1/3*L_{tr,f}\{(PI/4)[(D_{tp,f})^2+(D_{tr,f})^2]+[(PI/4)^2(D_{tp,f})^2(D_{tr,f})^2]^{1/2}\}-((L_{tr,s}+L_{tr,f})*A_s)\}$	0.84
SHEATHING VOLUME, V_{sh} =	$\{[(PI/4)*(D_{tr})^2-A_s]*[(12*L_{tl})-(L_{tp,s}+L_{tp,f}+L_{tr,s}+L_{tr,f}+L_{ts})]\}/231$	75.69
A-HEAD VOLUME, V_{ah} =	$\{(PI/4)*((D_{ah})^2*(T_{ah}))*2\}/231$	4.50
SHIM VOLUME, V_{sh} =	$\{[(PI/4)*\{(Dso)^2-(D_{si})^2\}+A_s]*(H_{ss,s}+H_{ss,f})\}/231$	6.41
NET DUCT VOLUME, V_T =	$V_{gc}+V_{tp}+V_{sh}+V_{tr}-(V_{ah}+V_{sh})$	**121.77**

PLANT:	CRYSTAL RIVER	UNIT:	N/A	SURVEILLANCE NUMBER:	8TH	YEAR:	35TH

TENDON GENERAL INFORMATION:

IDENTIFICATION #:	13H36	GROUP:	HOOP
# OF WIRES, N_s =	163	TAG LENGTH, L_{tl} (ft) =	155.7500
7mm WIRE AREA (in^2) =	0.05965	TOTAL WIRE AREA, A_s (in^2) =	9.72295

TENDON END SPECIFIC INPUT:	SHOP	FIELD
GREASE CAN LENGTH, L_{gc} (in) =	15.25	15.25
GREASE CAN INSIDE DIAMETER, D_{gc} (in) =	14.125	14.125
INITIAL TENDON SLACK, L_{ts} (in) =	3.25	
SHIM STACK HEIGHT, H_{ss} (in) =	6.25	7
POST TENSIONING SYSTEM SPECIFIC INPUT:	**SHOP**	**FIELD**
TRUMPLATE LENGTH, L_{tp} (in) =	69	27
TRUMPLATE INSIDE DIAMETER, D_{tp} (in) =	11	11
TRANSITION LENGTH, L_{tr} (in) =	2.25	2.25
TRANSITION/SHEATHING DIAMETER, D_{tr} (in) =	5	5
ANCHORHEAD THICKNESS, T_{ah} (in) =	6	
ANCHORHEAD DIAMETER, D_{ah} (in) =	10.5	
SHIM INSIDE DIAMETER, D_{si} (in) =	7	7
SHIM OUTSIDE DIAMETER, D_{so} (in) =	13.5	13.5

OUTPUT INFORMATION

DESCRIPTION	CALCULATION EQUATION	VOLUME (GALLONS)
GREASE CAN VOLUME, V_{gc} =	$\{(PI/4)*[(D_{gc,s})^2*(L_{gc,s})+(D_{gc,f})^2*(L_{gc,f})]\}/231$	20.69
TRUMPLATE VOLUME, V_{tp} =	$[((PI/4)*(D_{tp,s})^2*(L_{tp,s})-(L_{tp,s})*A_s)+((PI/4)*(D_{tp,f})^2*(L_{tp,f}))-(L_{tp,f})*A_s)]/231$	35.45
TRANSITION VOLUME, V_{tr} =	$(1/231)*\{1/3*L_{tr,s}\{(PI/4)[(D_{tp,s})^2+(D_{tr,s})^2]+[(PI/4)^2(D_{tp,s})^2(D_{tr,s})^2]^{1/2}\}+1/3*L_{tr,f}\{(PI/4)[(D_{tp,f})^2+(D_{tr,f})^2]+[(PI/4)^2(D_{tp,f})^2(D_{tr,f})^2]^{1/2}\}-\{(L_{tr,s}+L_{tr,f})*A_s\}\}$	0.84
SHEATHING VOLUME, V_{sh} =	$\{[(PI/4)*(D_{tr})^2-A_s]*[(12*L_{tl})-(L_{tp,s}+L_{tp,f}+L_{tr,s}+L_{tr,f}+L_{ts})]\}/231$	75.75
A-HEAD VOLUME, V_{ah} =	$\{(PI/4)*((D_{ah})^2*(T_{ah}))*2\}/231$	4.50
SHIM VOLUME, V_{sh} =	$\{[(PI/4)*\{(Dso)^2-(D_{si})^2\}+A_s]*(H_{ss,s}+H_{ss,f})\}/231$	6.56
NET DUCT VOLUME, V_T =	$V_{gc}+V_{tp}+V_{sh}+V_{tr}-(V_{ah}+V_{sh})$	**121.67**

PLANT:	CRYSTAL RIVER	UNIT:	N/A	SURVEILLANCE NUMBER:	8TH	YEAR:	35TH

TENDON GENERAL INFORMATION:

IDENTIFICATION #:	13H37	GROUP:	HOOP
# OF WIRES, N_s =	163	TAG LENGTH, L_{tl} (ft) =	155.6042
7mm WIRE AREA (in^2) =	0.05965	TOTAL WIRE AREA, A_s (in^2) =	9.72295

TENDON END SPECIFIC INPUT:	SHOP	FIELD
GREASE CAN LENGTH, L_{gc} (in) =	15.25	15.25
GREASE CAN INSIDE DIAMETER, D_{gc} (in) =	14.125	14.125
INITIAL TENDON SLACK, L_{ts} (in) =	1.8125	
SHIM STACK HEIGHT, H_{ss} (in) =	6.8125	5.375
POST TENSIONING SYSTEM SPECIFIC INPUT:	**SHOP**	**FIELD**
TRUMPLATE LENGTH, L_{tp} (in) =	69	27
TRUMPLATE INSIDE DIAMETER, D_{tp} (in) =	11	11
TRANSITION LENGTH, L_{tr} (in) =	2.25	2.25
TRANSITION/SHEATHING DIAMETER, D_{tr} (in) =	5	5
ANCHORHEAD THICKNESS, T_{ah} (in) =	6	
ANCHORHEAD DIAMETER, D_{ah} (in) =	10.5	
SHIM INSIDE DIAMETER, D_{si} (in) =	7	7
SHIM OUTSIDE DIAMETER, D_{so} (in) =	13.5	13.5

OUTPUT INFORMATION

DESCRIPTION	CALCULATION EQUATION	VOLUME (GALLONS)
GREASE CAN VOLUME, V_{gc} =	$\{(PI/4)*[(D_{gc,s})^2*(L_{gc,s})+(D_{gc,f})^2*(L_{gc,f})]\}/231$	20.69
TRUMPLATE VOLUME, V_{tp} =	$[((PI/4)*(D_{tp,s})^2*(L_{tp,s})-(L_{tp,s})*A_s)+((PI/4)*(D_{tp,f})^2*(L_{tp,f}))-(L_{tp,f})*A_s)]/231$	35.45
TRANSITION VOLUME, V_{tr} =	$(1/231)*\{1/3*L_{tr,s}\{(PI/4)[(D_{tp,s})^2+(D_{tr,s})^2]+[(PI/4)^2(D_{tp,s})^2(D_{tr,s})^2]^{1/2}\}+1/3*L_{tr,f}\{(PI/4)[(D_{tp,f})^2+(D_{tr,f})^2]+[(PI/4)^2(D_{tp,f})^2(D_{tr,f})^2]^{1/2}\}-((L_{tr,s}+L_{tr,f})*A_s)\}$	0.84
SHEATHING VOLUME, V_{sh} =	$\{[(PI/4)*(D_{tr})^2-A_s]*[(12*L_{tl})-(L_{tp,s}+L_{tp,f}+L_{tr,s}+L_{tr,f}+L_{ts})]\}/231$	75.73
A-HEAD VOLUME, V_{ah} =	$\{(PI/4)*((D_{ah})^2*(T_{ah}))*2\}/231$	4.50
SHIM VOLUME, V_{sh} =	$\{[(PI/4)*\{(Dso)^2-(D_{si})^2\}+A_s]*(H_{ss,s}+H_{ss,f})\}/231$	6.03
NET DUCT VOLUME, V_T =	$V_{gc}+V_{tp}+V_{sh}+V_{tr}-(V_{ah}+V_{sh})$	**122.18**

PLANT:	CRYSTAL RIVER	UNIT:	N/A	SURVEILLANCE NUMBER:	8TH	YEAR:	35TH

TENDON GENERAL INFORMATION:

IDENTIFICATION #:	42H45	GROUP:	HOOP
# OF WIRES, N_s =	163	TAG LENGTH, L_{tl} (ft) =	155.5833
7mm WIRE AREA (in^2) =	0.05965	TOTAL WIRE AREA, A_s (in^2) =	9.72295

TENDON END SPECIFIC INPUT:	SHOP	FIELD
GREASE CAN LENGTH, L_{gc} (in) =	15.25	15.25
GREASE CAN INSIDE DIAMETER, D_{gc} (in) =	14.125	14.125
INITIAL TENDON SLACK, L_{ts} (in) =	3.1875	
SHIM STACK HEIGHT, H_{ss} (in) =	7.25	6.375
POST TENSIONING SYSTEM SPECIFIC INPUT:	**SHOP**	**FIELD**
TRUMPLATE LENGTH, L_{tp} (in) =	69	27
TRUMPLATE INSIDE DIAMETER, D_{tp} (in) =	11	11
TRANSITION LENGTH, L_{tr} (in) =	2.25	2.25
TRANSITION/SHEATHING DIAMETER, D_{tr} (in) =	5	5
ANCHORHEAD THICKNESS, T_{ah} (in) =	6	
ANCHORHEAD DIAMETER, D_{ah} (in) =	10.5	
SHIM INSIDE DIAMETER, D_{si} (in) =	7	7
SHIM OUTSIDE DIAMETER, D_{so} (in) =	13.5	13.5

OUTPUT INFORMATION

DESCRIPTION	CALCULATION EQUATION	VOLUME (GALLONS)
GREASE CAN VOLUME, V_{gc} =	$\{(PI/4)*[(D_{gc,s})^2*(L_{gc,s})+(D_{gc,f})^2*(L_{gc,f})]\}/231$	20.69
TRUMPLATE VOLUME, V_{tp} =	$[((PI/4)*(D_{tp,s})^2*(L_{tp,s})-(L_{tp,s})*A_s)+((PI/4)*(D_{tp,f})^2*(L_{tp,f}))-(L_{tp,f})*A_s)]/231$	35.45
TRANSITION VOLUME, V_{tr} =	$(1/231)*\{1/3*L_{tr,s}\{(PI/4)[(D_{tp,s})^2+(D_{tr,s})^2]+[(PI/4)^2(D_{tp,s})^2(D_{tr,s})^2]^{1/2}\}+1/3*L_{tr,f}\{(PI/4)[(D_{tp,f})^2+(D_{tr,f})^2]+[(PI/4)^2(D_{tp,f})^2(D_{tr,f})^2]^{1/2}\}-\{(L_{tr,s}+L_{tr,f})*A_s\}\}$	0.84
SHEATHING VOLUME, V_{sh} =	$\{[(PI/4)*(D_{tr})^2-A_s]*[(12*L_{tl})-(L_{tp,s}+L_{tp,f}+L_{tr,s}+L_{tr,f}+L_{ts})]\}/231$	75.66
A-HEAD VOLUME, V_{ah} =	$\{(PI/4)*((D_{ah})^2*(T_{ah}))*2\}/231$	4.50
SHIM VOLUME, V_{sh} =	$\{[(PI/4)*\{(Dso)^2-(D_{si})^2\}+A_s]*(H_{ss,s}+H_{ss,f})\}/231$	6.75
NET DUCT VOLUME, V_T =	$V_{gc}+V_{tp}+V_{sh}+V_{tr}-(V_{ah}+V_{sh})$	**121.40**

PLANT:	CRYSTAL RIVER	UNIT:	N/A	SURVEILLANCE NUMBER:	8TH	YEAR:	35TH

TENDON GENERAL INFORMATION:

IDENTIFICATION #:	42H46	GROUP:	HOOP
# OF WIRES, N_s =	163	TAG LENGTH, L_d (ft) =	155.4792
7mm WIRE AREA (in^2) =	0.05965	TOTAL WIRE AREA, A_s (in^2) =	9.72295

TENDON END SPECIFIC INPUT:	SHOP	FIELD
GREASE CAN LENGTH, L_{gc} (in) =	15.25	15.25
GREASE CAN INSIDE DIAMETER, D_{gc} (in) =	14.125	14.125
INITIAL TENDON SLACK, L_{ts} (in) =	0.625	
SHIM STACK HEIGHT, H_{ss} (in) =	6	5.375
POST TENSIONING SYSTEM SPECIFIC INPUT:	**SHOP**	**FIELD**
TRUMPLATE LENGTH, L_{tp} (in) =	69	27
TRUMPLATE INSIDE DIAMETER, D_{tp} (in) =	11	11
TRANSITION LENGTH, L_{tr} (in) =	2.25	2.25
TRANSITION/SHEATHING DIAMETER, D_{tr} (in) =	5	5
ANCHORHEAD THICKNESS, T_{ah} (in) =	6	
ANCHORHEAD DIAMETER, D_{ah} (in) =	10.5	
SHIM INSIDE DIAMETER, D_{si} (in) =	7	7
SHIM OUTSIDE DIAMETER, D_{so} (in) =	13.5	13.5

OUTPUT INFORMATION

DESCRIPTION	CALCULATION EQUATION	VOLUME (GALLONS)
GREASE CAN VOLUME, V_{gc} =	$\{(PI/4)*[(D_{gc,s})^2*(L_{gc,s})+(D_{gc,f})^2*(L_{gc,f})]\}/231$	20.69
TRUMPLATE VOLUME, V_{tp} =	$[((PI/4)*(D_{tp,s})^2*(L_{tp,s})-(L_{tp,s})*A_s)+((PI/4)*(D_{tp,f})^2*(L_{tp,f}))-(L_{tp,f})*A_s)]/231$	35.45
TRANSITION VOLUME, V_{tr} =	$(1/231)*\{1/3*L_{tr,s}((PI/4)[(D_{tp,s})^2+(D_{tr,s})^2]+[(PI/4)^2(D_{tp,s})^2(D_{tr,s})^2]^{1/2}\}+1/3*L_{tr,f}((PI/4)[(D_{tp,f})^2+(D_{tr,f})^2]+[(PI/4)^2(D_{tp,f})^2(D_{tr,f})^2]^{1/2})-\{(L_{tr,s}+L_{tr,f})*A_s\}\}$	0.84
SHEATHING VOLUME, V_{sh} =	$\{[(PI/4)*(D_{tr})^2-A_s]*[(12*L_d)-(L_{tp,s}+L_{tp,f}+L_{tr,s}+L_{tr,f}+L_{ts})]\}/231$	75.72
A-HEAD VOLUME, V_{ah} =	$\{(PI/4)*((D_{ah})^2*(T_{ah}))*2\}/231$	4.50
SHIM VOLUME, V_{sh} =	$\{[(PI/4)*\{(Dso)^2-(D_{si})^2\}+A_s]*(H_{ss,s}+H_{ss,f})\}/231$	5.63
NET DUCT VOLUME, V_T =	$V_{gc}+V_{tp}+V_{sh}+V_{tr}-(V_{ah}+V_{sh})$	**122.57**

PLANT:	CRYSTAL RIVER	UNIT:	N/A	SURVEILLANCE NUMBER:	8TH	YEAR:	35TH

TENDON GENERAL INFORMATION:

IDENTIFICATION #:	42H47	GROUP:	HOOP
# OF WIRES, N_s =	163	TAG LENGTH, L_{tl} (ft) =	155.5417
7mm WIRE AREA (in^2) =	0.05965	TOTAL WIRE AREA, A_s (in^2) =	9.72295

TENDON END SPECIFIC INPUT:	SHOP	FIELD
GREASE CAN LENGTH, L_{gc} (in) =	15.25	15.25
GREASE CAN INSIDE DIAMETER, D_{gc} (in) =	14.125	14.125
INITIAL TENDON SLACK, L_{ts} (in) =	2.5	
SHIM STACK HEIGHT, H_{ss} (in) =	6.375	6.375
POST TENSIONING SYSTEM SPECIFIC INPUT:	**SHOP**	**FIELD**
TRUMPLATE LENGTH, L_{tp} (in) =	69	27
TRUMPLATE INSIDE DIAMETER, D_{tp} (in) =	11	11
TRANSITION LENGTH, L_{tr} (in) =	2.25	2.25
TRANSITION/SHEATHING DIAMETER, D_{tr} (in) =	5	5
ANCHORHEAD THICKNESS, T_{ah} (in) =	6	
ANCHORHEAD DIAMETER, D_{ah} (in) =	10.5	
SHIM INSIDE DIAMETER, D_{si} (in) =	7	7
SHIM OUTSIDE DIAMETER, D_{so} (in) =	13.5	13.5

OUTPUT INFORMATION

DESCRIPTION	CALCULATION EQUATION	VOLUME (GALLONS)
GREASE CAN VOLUME, V_{gc} =	$\{(PI/4)*[(D_{gc,s})^2*(L_{gc,s})+(D_{gc,f})^2*(L_{gc,f})]\}/231$	20.69
TRUMPLATE VOLUME, V_{tp} =	$[((PI/4)*(D_{tp,s})^2*(L_{tp,s})-(L_{tp,s})*A_s)+((PI/4)*(D_{tp,f})^2*(L_{tp,f})-(L_{tp,f})*A_s)]/231$	35.45
TRANSITION VOLUME, V_{tr} =	$(1/231)*(1/3*L_{tr,s}\{(PI/4)[(D_{tp,s})^2+(D_{tr,s})^2]+[(PI/4)^2(D_{tp,s})^2(D_{tr,s})^2]^{1/2}\}+1/3*L_{tr,f}\{(PI/4)[(D_{tp,f})^2+(D_{tr,f})^2]+[(PI/4)^2(D_{tp,f})^2(D_{tr,f})^2]^{1/2}\}-\{(L_{tr,s}+L_{tr,f})*A_s\}\}$	0.84
SHEATHING VOLUME, V_{sh} =	$\{[(PI/4)*(D_s)^2-A_s]*[(12*L_{tl})-(L_{tp,s}+L_{tp,f}+L_{tr,s}+L_{tr,f}+L_{ts})]\}/231$	75.67
A-HEAD VOLUME, V_{ah} =	$\{(PI/4)*((D_{ah})^2*(T_{ah}))*2\}/231$	4.50
SHIM VOLUME, V_{sh} =	$\{[(PI/4)*\{(Dso)^2-(D_{si})^2\}+A_s]*(H_{ss,s}+H_{ss,f})\}/231$	6.31
NET DUCT VOLUME, V_T =	$V_{gc}+V_{tp}+V_{sh}+V_{tr}-(V_{ah}+V_{sh})$	**121.84**

PSC Precision Surveillance Corporation	Crystal River Unit 3 8th Period (35th Year) Tendon Surveillance SQ 12.2 Grease Void Volumes	DOCUMENT NO:	CR-N1002-020
		DOCUMENT TYPE:	ENG
		REVISION #	0
		SAFETY RELATED	
		NON-SAFETY RELATED	
		PAGE	20 OF 43

PREPARED BY: BAG DATE: 07/10/07 REVIEWED BY: CEC DATE: 08/02/07

PLANT:	CRYSTAL RIVER	UNIT:	N/A	SURVEILLANCE NUMBER:	8TH	YEAR:	35TH

TENDON GENERAL INFORMATION:

IDENTIFICATION #:	46H20	GROUP:	HOOP
# OF WIRES, N_s =	163	TAG LENGTH, L_{tl} (ft) =	155.9375
7mm WIRE AREA (in^2) =	0.05965	TOTAL WIRE AREA, A_s (in^2) =	9.72295

TENDON END SPECIFIC INPUT:	SHOP	FIELD
GREASE CAN LENGTH, L_{gc} (in) =	15.25	15.25
GREASE CAN INSIDE DIAMETER, D_{gc} (in) =	14.125	14.125
INITIAL TENDON SLACK, L_{ts} (in) =	3.625	
SHIM STACK HEIGHT, H_{ss} (in) =	7.375	6.625
POST TENSIONING SYSTEM SPECIFIC INPUT:	**SHOP**	**FIELD**
TRUMPLATE LENGTH, L_{tp} (in) =	69	27
TRUMPLATE INSIDE DIAMETER, D_{tp} (in) =	11	11
TRANSITION LENGTH, L_{tr} (in) =	2.25	2.25
TRANSITION/SHEATHING DIAMETER, D_{tr} (in) =	5	5
ANCHORHEAD THICKNESS, T_{ah} (in) =	6	
ANCHORHEAD DIAMETER, D_{ah} (in) =	10.5	
SHIM INSIDE DIAMETER, D_{si} (in) =	7	7
SHIM OUTSIDE DIAMETER, D_{so} (in) =	13.5	13.5

OUTPUT INFORMATION

DESCRIPTION	CALCULATION EQUATION	VOLUME (GALLONS)
GREASE CAN VOLUME, V_{gc} =	$\{(PI/4)*[(D_{gc,s})^2*(L_{gc,s})+(D_{gc,f})^2*(L_{gc,f})]\}/231$	20.69
TRUMPLATE VOLUME, V_{tp} =	$[\{(PI/4)*(D_{tp,s})^2*(L_{tp,s})-(L_{tp,s})*A_s\}+\{(PI/4)*(D_{tp,f})^2*(L_{tp,f})\}-(L_{tp,f})*A_s)]/231$	35.45
TRANSITION VOLUME, V_{tr} =	$(1/231)*\{1/3*L_{tr,s}\{(PI/4)[(D_{tp,s})^2+(D_{tr,s})^2]+[(PI/4)^2(D_{tp,s})^2(D_{tr,s})^2]^{1/2}\}+1/3*L_{tr,f}\{(PI/4)[(D_{tp,f})^2+(D_{tr,f})^2]+[(PI/4)^2(D_{tp,f})^2(D_{tr,f})^2]^{1/2}\}-\{(L_{tr,s}+L_{tr,f})*A_s\}\}$	0.84
SHEATHING VOLUME, V_{sh} =	$\{[(PI/4)*(D_{tr})^2-A_s]*[(12*L_s)-(L_{tp,s}+L_{tp,f}+L_{tr,s}+L_{tr,f}+L_{ts})]\}/231$	75.83
A-HEAD VOLUME, V_{ah} =	$\{(PI/4)*((D_{ah})^2*(T_{ah}))*2\}/231$	4.50
SHIM VOLUME, V_{sh} =	$\{[(PI/4)*\{(Dso)^2-(D_{si})^2\}+A_s]*(H_{ss,s}+H_{ss,f})\}/231$	6.93
NET DUCT VOLUME, V_T =	$V_{gc}+V_{tp}+V_{sh}+V_{tr}-(V_{ah}+V_{sh})$	**121.37**

PLANT:	CRYSTAL RIVER	UNIT:	N/A	SURVEILLANCE NUMBER:	8TH	YEAR:	35TH

TENDON GENERAL INFORMATION:

IDENTIFICATION #:	46H21	GROUP:	HOOP
# OF WIRES, N_s =	163	TAG LENGTH, L_{tl} (ft) =	154.3333
7mm WIRE AREA (in^2) =	0.05965	TOTAL WIRE AREA, A_s (in^2) =	9.72295

TENDON END SPECIFIC INPUT:	SHOP	FIELD
GREASE CAN LENGTH, L_{gc} (in) =	15.25	15.25
GREASE CAN INSIDE DIAMETER, D_{gc} (in) =	14.125	14.125
INITIAL TENDON SLACK, L_{ts} (in) =	0.8125	
SHIM STACK HEIGHT, H_{ss} (in) =	5.625	5.5625

POST TENSIONING SYSTEM SPECIFIC INPUT:	SHOP	FIELD
TRUMPLATE LENGTH, L_{tp} (in) =	69	27
TRUMPLATE INSIDE DIAMETER, D_{tp} (in) =	11	11
TRANSITION LENGTH, L_{tr} (in) =	2.25	2.25
TRANSITION/SHEATHING DIAMETER, D_{tr} (in) =	5	5
ANCHORHEAD THICKNESS, T_{ah} (in) =	6	
ANCHORHEAD DIAMETER, D_{ah} (in) =	10.5	
SHIM INSIDE DIAMETER, D_{si} (in) =	7	7
SHIM OUTSIDE DIAMETER, D_{so} (in) =	13.5	13.5

OUTPUT INFORMATION

DESCRIPTION	CALCULATION EQUATION	VOLUME (GALLONS)
GREASE CAN VOLUME, V_{gc} =	$\{(PI/4)*[(D_{gc,s})^2*(L_{gc,s})+(D_{gc,f})^2*(L_{gc,f})]\}/231$	20.69
TRUMPLATE VOLUME, V_{tp} =	$[((PI/4)*(D_{tp,s})^2*(L_{tp,s})-(L_{tp,s})*A_s)+((PI/4)*(D_{tp,f})^2*(L_{tp,f}))-(L_{tp,f})*A_s)]/231$	35.45
TRANSITION VOLUME, V_{tr} =	$(1/231)*\{1/3*L_{tr,s}((PI/4)[(D_{tp,s})^2+(D_{tr,s})^2]+[(PI/4)^2(D_{tp,s})^2(D_{tr,s})^2]^{1/2})+1/3*L_{tr,f}((PI/4)[(D_{tp,f})^2+(D_{tr,f})^2]+[(PI/4)^2(D_{tp,f})^2(D_{tr,f})^2]^{1/2})-((L_{tr,s}+L_{tr,f})*A_s)\}$	0.84
SHEATHING VOLUME, V_{sh} =	$\{[(PI/4)*(D_{tr})^2-A_s]*[(12*L_{tl})-(L_{tp,s}+L_{tp,f}+L_{tr,s}+L_{tr,f}+L_{ts})]\}/231$	75.12
A-HEAD VOLUME, V_{ah} =	$\{(PI/4)*((D_{ah})^2*(T_{ah}))*2\}/231$	4.50
SHIM VOLUME, V_{sh} =	$\{[(PI/4)*\{(Dso)^2-(D_{si})^2\}+A_s]*(H_{ss,s}+H_{ss,f})\}/231$	5.54
NET DUCT VOLUME, V_T =	$V_{gc}+V_{tp}+V_{sh}+V_{tr}-(V_{ah}+V_{sh})$	**122.06**

PSC Precision Surveillance Corporation	Crystal River Unit 3 8th Period (35th Year) Tendon Surveillance SQ 12.2 Grease Void Volumes	DOCUMENT NO:	CR-N1002-020
		DOCUMENT TYPE:	ENG
		REVISION #	0
		SAFETY RELATED	
		NON-SAFETY RELATED	
		PAGE 22 OF 43	
	PREPARED BY: BAG DATE: 07/10/07	REVIEWED BY: CEC	DATE: 08/02/07

PLANT:	CRYSTAL RIVER	UNIT:	N/A	SURVEILLANCE NUMBER:	8TH	YEAR:	35TH

TENDON GENERAL INFORMATION:

IDENTIFICATION #:	46H22	GROUP:	HOOP
# OF WIRES, N_s =	163	TAG LENGTH, L_{tl} (ft) =	155.7917
7mm WIRE AREA (in^2) =	0.05965	TOTAL WIRE AREA, A_s (in^2) =	9.72295

TENDON END SPECIFIC INPUT:	SHOP	FIELD
GREASE CAN LENGTH, L_{gc} (in) =	15.25	15.25
GREASE CAN INSIDE DIAMETER, D_{gc} (in) =	14.125	14.125
INITIAL TENDON SLACK, L_{ts} (in) =	1.0625	
SHIM STACK HEIGHT, H_{ss} (in) =	6.375	5.5625
POST TENSIONING SYSTEM SPECIFIC INPUT:	**SHOP**	**FIELD**
TRUMPLATE LENGTH, L_{tp} (in) =	69	27
TRUMPLATE INSIDE DIAMETER, D_{tp} (in) =	11	11
TRANSITION LENGTH, L_{tr} (in) =	2.25	2.25
TRANSITION/SHEATHING DIAMETER, D_{tr} (in) =	5	5
ANCHORHEAD THICKNESS, T_{ah} (in) =	6	
ANCHORHEAD DIAMETER, D_{ah} (in) =	10.5	
SHIM INSIDE DIAMETER, D_{si} (in) =	7	7
SHIM OUTSIDE DIAMETER, D_{so} (in) =	13.5	13.5

OUTPUT INFORMATION

DESCRIPTION	CALCULATION EQUATION	VOLUME (GALLONS)
GREASE CAN VOLUME, V_{gc} =	$\{(PI/4)*[(D_{gc,s})^2*(L_{gc,s})+(D_{gc,f})^2*(L_{gc,f})]\}/231$	20.69
TRUMPLATE VOLUME, V_{tp} =	$[((PI/4)*(D_{tp,s})^2*(L_{tp,s})-(L_{tp,s})*A_s)+((PI/4)*(D_{tp,f})^2*(L_{tp,f}))-(L_{tp,f})*A_s)]/231$	35.45
TRANSITION VOLUME, V_{tr} =	$(1/231)*\{1/3*L_{tr,s}\{(PI/4)[(D_{tp,s})^2+(D_{tr,s})^2]+[(PI/4)^2(D_{tp,s})^2(D_{tr,s})^2]^{1/2}\}+1/3*L_{tr,f}\{(PI/4)[(D_{tp,f})^2+(D_{tr,f})^2]+[(PI/4)^2(D_{tp,f})^2(D_{tr,f})^2]^{1/2}\}-\{(L_{tr,s}+L_{tr,f})*A_s\}\}$	0.84
SHEATHING VOLUME, V_{sh} =	$\{[(PI/4)*(D_{tr})^2-A_s]*[(12*L_{tl})-(L_{tp,s}+L_{tp,f}+L_{tr,s}+L_{tr,f}+L_{ts})]\}/231$	75.86
A-HEAD VOLUME, V_{ah} =	$\{(PI/4)*((D_{ah})^2*(T_{ah}))*2\}/231$	4.50
SHIM VOLUME, V_{sh} =	$\{[(PI/4)*\{(Dso)^2-(D_{si})^2\}+A_s]*(H_{ss,s}+H_{ss,f})\}/231$	5.91
NET DUCT VOLUME, V_T =	$V_{gc}+V_{tp}+V_{sh}+V_{tr}-(V_{ah}+V_{sh})$	**122.43**

PLANT:	CRYSTAL RIVER	UNIT:	N/A	SURVEILLANCE NUMBER:	8TH	YEAR:	35TH

TENDON GENERAL INFORMATION:

IDENTIFICATION #:	51H33	GROUP:	HOOP
# OF WIRES, N_s =	163	TAG LENGTH, L_{tl} (ft) =	155.5417
7mm WIRE AREA (in^2) =	0.05965	TOTAL WIRE AREA, A_s (in^2) =	9.72295

TENDON END SPECIFIC INPUT:	SHOP	FIELD
GREASE CAN LENGTH, L_{gc} (in) =	15.25	15.25
GREASE CAN INSIDE DIAMETER, D_{gc} (in) =	14.125	14.125
INITIAL TENDON SLACK, L_{ts} (in) =	2.3125	
SHIM STACK HEIGHT, H_{ss} (in) =	6.5625	6

POST TENSIONING SYSTEM SPECIFIC INPUT:	SHOP	FIELD
TRUMPLATE LENGTH, L_{tp} (in) =	69	27
TRUMPLATE INSIDE DIAMETER, D_{tp} (in) =	11	11
TRANSITION LENGTH, L_{tr} (in) =	2.25	2.25
TRANSITION/SHEATHING DIAMETER, D_{tr} (in) =	5	5
ANCHORHEAD THICKNESS, T_{ah} (in) =	6	
ANCHORHEAD DIAMETER, D_{ah} (in) =	10.5	
SHIM INSIDE DIAMETER, D_{si} (in) =	7	7
SHIM OUTSIDE DIAMETER, D_{so} (in) =	13.5	13.5

OUTPUT INFORMATION

DESCRIPTION	CALCULATION EQUATION	VOLUME (GALLONS)
GREASE CAN VOLUME, V_{gc} =	$\{(PI/4)*[(D_{gc,s})^2*(L_{gc,s})+(D_{gc,f})^2*(L_{gc,f})]\}/231$	20.69
TRUMPLATE VOLUME, V_{tp} =	$[((PI/4)*(D_{tp,s})^2*(L_{tp,s})-(L_{tp,s})*A_s)+((PI/4)*(D_{tp,f})^2*(L_{tp,f}))-(L_{tp,f})*A_s)]/231$	35.45
TRANSITION VOLUME, V_{tr} =	$(1/231)*\{1/3*L_{tr,s}\{(PI/4)[(D_{tp,s})^2+(D_{tr,s})^2]+[(PI/4)^2(D_{tp,s})^2(D_{tr,s})^2]^{1/2}\}+1/3*L_{tr,f}\{(PI/4)[(D_{tp,f})^2+(D_{tr,f})^2]+[(PI/4)^2(D_{tp,f})^2(D_{tr,f})^2]^{1/2}\}-\{(L_{tr,s}+L_{tr,f})*A_s\}\}$	0.84
SHEATHING VOLUME, V_{sh} =	$\{[(PI/4)*(D_{tr})^2-A_s]*[(12*L_t)-(L_{tp,s}+L_{tp,f}+L_{tr,s}+L_{tr,f}+L_{ts})]\}/231$	75.68
A-HEAD VOLUME, V_{ah} =	$\{(PI/4)*((D_{ah})^2*(T_{ah}))*2\}/231$	4.50
SHIM VOLUME, V_{sh} =	$\{[(PI/4)*\{(Dso)^2-(D_{si})^2\}+A_s]*(H_{ss,s}+H_{ss,f})\}/231$	6.22
NET DUCT VOLUME, V_T =	$V_{gc}+V_{tp}+V_{sh}+V_{tr}-(V_{ah}+V_{sh})$	**121.94**

PLANT:	CRYSTAL RIVER	UNIT:	N/A	SURVEILLANCE NUMBER:	8TH	YEAR:	35TH

TENDON GENERAL INFORMATION:

IDENTIFICATION #:	51H34	GROUP:	HOOP
# OF WIRES, N_s =	163	TAG LENGTH, L_{tl} (ft) =	155.5833
7mm WIRE AREA (in^2) =	0.05965	TOTAL WIRE AREA, A_s (in^2) =	9.72295

TENDON END SPECIFIC INPUT:	SHOP	FIELD
GREASE CAN LENGTH, L_{gc} (in) =	15.25	15.25
GREASE CAN INSIDE DIAMETER, D_{gc} (in) =	14.125	14.125
INITIAL TENDON SLACK, L_{ts} (in) =	4.3125	
SHIM STACK HEIGHT, H_{ss} (in) =	7.375	7.1875
POST TENSIONING SYSTEM SPECIFIC INPUT:	**SHOP**	**FIELD**
TRUMPLATE LENGTH, L_{tp} (in) =	69	27
TRUMPLATE INSIDE DIAMETER, D_{tp} (in) =	11	11
TRANSITION LENGTH, L_{tr} (in) =	2.25	2.25
TRANSITION/SHEATHING DIAMETER, D_{tr} (in) =	5	5
ANCHORHEAD THICKNESS, T_{ah} (in) =	6	
ANCHORHEAD DIAMETER, D_{ah} (in) =	10.5	
SHIM INSIDE DIAMETER, D_{si} (in) =	7	7
SHIM OUTSIDE DIAMETER, D_{so} (in) =	13.5	13.5

OUTPUT INFORMATION

DESCRIPTION	CALCULATION EQUATION	VOLUME (GALLONS)
GREASE CAN VOLUME, V_{gc} =	$\{(PI/4)*[(D_{gc,s})^2*(L_{gc,s})+(D_{gc,f})^2*(L_{gc,f})]\}/231$	20.69
TRUMPLATE VOLUME, V_{tp} =	$[((PI/4)*(D_{tp,s})^2*(L_{tp,s})-(L_{tp,s})*A_s)+((PI/4)*(D_{tp,f})^2*(L_{tp,f}))-(L_{tp,f})*A_s)]/231$	35.45
TRANSITION VOLUME, V_{tr} =	$(1/231)*\{1/3*L_{tr,s}\{(PI/4)[(D_{tp,s})^2+(D_{tr,s})^2]+[(PI/4)^2(D_{tp,s})^2(D_{tr,s})^2]^{1/2}\}+1/3*L_{tr,f}\{(PI/4)[(D_{tp,f})^2+(D_{tr,f})^2]+[(PI/4)^2(D_{tp,f})^2(D_{tr,f})^2]^{1/2}\}-\{(L_{tr,s}+L_{tr,f})*A_s\}\}$	0.84
SHEATHING VOLUME, V_{sh} =	$\{[(PI/4)*(D_{tr})^2-A_s]*[(12*L_{tl})-(L_{tp,s}+L_{tp,f}+L_{tr,s}+L_{tr,f}+L_{ts})]\}/231$	75.61
A-HEAD VOLUME, V_{ah} =	$\{(PI/4)*((D_{ah})^2*(T_{ah}))*2)/231$	4.50
SHIM VOLUME, V_{sh} =	$\{[(PI/4)*\{(Dso)^2-(D_{si})^2\}+A_s]*(H_{ss,s}+H_{ss,f})\}/231$	7.21
NET DUCT VOLUME, V_T =	$V_{gc}+V_{tp}+V_{sh}+V_{tr}-(V_{ah}+V_{sh})$	**120.88**

PLANT:	CRYSTAL RIVER	UNIT:	N/A	SURVEILLANCE NUMBER:	8TH	YEAR:	35TH

TENDON GENERAL INFORMATION:

IDENTIFICATION #:	51H35	GROUP:	HOOP
# OF WIRES, N_s =	163	TAG LENGTH, L_{tl} (ft) =	155.5000
7mm WIRE AREA (in^2) =	0.05965	TOTAL WIRE AREA, A_s (in^2) =	9.72295

TENDON END SPECIFIC INPUT:	SHOP	FIELD
GREASE CAN LENGTH, L_{gc} (in) =	15.25	15.25
GREASE CAN INSIDE DIAMETER, D_{gc} (in) =	14.125	14.125
INITIAL TENDON SLACK, L_{ts} (in) =	2	
SHIM STACK HEIGHT, H_{ss} (in) =	6	6

POST TENSIONING SYSTEM SPECIFIC INPUT:	SHOP	FIELD
TRUMPLATE LENGTH, L_{tp} (in) =	69	27
TRUMPLATE INSIDE DIAMETER, D_{tp} (in) =	11	11
TRANSITION LENGTH, L_{tr} (in) =	2.25	2.25
TRANSITION/SHEATHING DIAMETER, D_{tr} (in) =	5	5
ANCHORHEAD THICKNESS, T_{ah} (in) =	6	
ANCHORHEAD DIAMETER, D_{ah} (in) =	10.5	
SHIM INSIDE DIAMETER, D_{si} (in) =	7	7
SHIM OUTSIDE DIAMETER, D_{so} (in) =	13.5	13.5

OUTPUT INFORMATION

DESCRIPTION	CALCULATION EQUATION	VOLUME (GALLONS)
GREASE CAN VOLUME, V_{gc} =	$\{(PI/4)*[(D_{gc,s})^2*(L_{gc,s})+(D_{gc,f})^2*(L_{gc,f})]\}/231$	20.69
TRUMPLATE VOLUME, V_{tp} =	$[((PI/4)*(D_{tp,s})^2*(L_{tp,s})-(L_{tp,s})*A_s)+((PI/4)*(D_{tp,f})^2*(L_{tp,f}))-(L_{tp,f})*A_s)]/231$	35.45
TRANSITION VOLUME, V_{tr} =	$(1/231)*\{1/3*L_{tr,s}\{(PI/4)[(D_{tp,s})^2+(D_{tr,s})^2]+[(PI/4)^2(D_{tp,s})^2(D_{tr,s})^2]^{1/2}\}+1/3*L_{tr,f}\{(PI/4)[(D_{tp,f})^2+(D_{tr,f})^2]+[(PI/4)^2(D_{tp,f})^2(D_{tr,f})^2]^{1/2}\}-\{(L_{tr,s}+L_{tr,f})*A_s\}\}$	0.84
SHEATHING VOLUME, V_{sh} =	$\{[(PI/4)*(D_{tr})^2-A_s]*[(12*L_{tl})-(L_{tp,s}+L_{tp,f}+L_{tr,s}+L_{tr,f}+L_{ts})]\}/231$	75.67
A-HEAD VOLUME, V_{ah} =	$\{(PI/4)*((D_{ah})^2*(T_{ah}))*2\}/231$	4.50
SHIM VOLUME, V_{sh} =	$\{[(PI/4)*\{(Dso)^2-(D_{si})^2\}+A_s]*(H_{ss,s}+H_{ss,f})\}/231$	5.94
NET DUCT VOLUME, V_T =	$V_{gc}+V_{tp}+V_{sh}+V_{tr}-(V_{ah}+V_{sh})$	**122.21**

PLANT:	CRYSTAL RIVER	UNIT:	N/A	SURVEILLANCE NUMBER:	8TH	YEAR:	35TH

TENDON GENERAL INFORMATION:

IDENTIFICATION #:	62H29	GROUP:	HOOP
# OF WIRES, N_s =	163	TAG LENGTH, L_{tl} (ft) =	155.7083
7mm WIRE AREA (in^2) =	0.05965	TOTAL WIRE AREA, A_s (in^2) =	9.72295

TENDON END SPECIFIC INPUT:	SHOP	FIELD
GREASE CAN LENGTH, L_{gc} (in) =	15.25	15.25
GREASE CAN INSIDE DIAMETER, D_{gc} (in) =	14.125	14.125
INITIAL TENDON SLACK, L_{ts} (in) =	2.375	
SHIM STACK HEIGHT, H_{ss} (in) =	6.375	6.375
POST TENSIONING SYSTEM SPECIFIC INPUT:	**SHOP**	**FIELD**
TRUMPLATE LENGTH, L_{tp} (in) =	69	27
TRUMPLATE INSIDE DIAMETER, D_{tp} (in) =	11	11
TRANSITION LENGTH, L_{tr} (in) =	2.25	2.25
TRANSITION/SHEATHING DIAMETER, D_{tr} (in) =	5	5
ANCHORHEAD THICKNESS, T_{ah} (in) =	6	
ANCHORHEAD DIAMETER, D_{ah} (in) =	10.5	
SHIM INSIDE DIAMETER, D_{si} (in) =	7	7
SHIM OUTSIDE DIAMETER, D_{so} (in) =	13.5	13.5

OUTPUT INFORMATION

DESCRIPTION	CALCULATION EQUATION	VOLUME (GALLONS)
GREASE CAN VOLUME, V_{gc} =	$\{(PI/4)*[(D_{gc,s})^2*(L_{gc,s})+(D_{gc,f})^2*(L_{gc,f})]\}/231$	20.69
TRUMPLATE VOLUME, V_{tp} =	$[((PI/4)*(D_{tp,s})^2*(L_{tp,s})-(L_{tp,s})*A_s)+((PI/4)*(D_{tp,f})^2*(L_{tp,f}))-(L_{tp,f})*A_s)]/231$	35.45
TRANSITION VOLUME, V_{tr} =	$(1/231)*\{1/3*L_{tr,s}\{(PI/4)[(D_{tp,s})^2+(D_{tr,s})^2]+[(PI/4)^2(D_{tp,s})^2(D_{tr,s})^2]^{1/2}\}+1/3*L_{tr,f}\{(PI/4)[(D_{tp,f})^2+(D_{tr,f})^2]+[(PI/4)^2(D_{tp,f})^2(D_{tr,f})^2]^{1/2}\}-((L_{tr,s}+L_{tr,f})*A_s)\}$	0.84
SHEATHING VOLUME, V_{sh} =	$\{[(PI/4)*(D_{tr})^2-A_s]*[(12*L_{tl})-(L_{tp,s}+L_{tp,f}+L_{tr,s}+L_{tr,f}+L_{ts})]\}/231$	75.76
A-HEAD VOLUME, V_{ah} =	$\{(PI/4)*((D_{ah})^2*(T_{ah}))*2\}/231$	4.50
SHIM VOLUME, V_{sh} =	$\{[(PI/4)*((Dso)^2-(D_{si})^2]+A_s]*(H_{ss,s}+H_{ss,f})\}/231$	6.31
NET DUCT VOLUME, V_T =	$V_{gc}+V_{tp}+V_{sh}+V_{tr}-(V_{ah}+V_{sh})$	**121.93**

PLANT:	CRYSTAL RIVER	UNIT:	N/A	SURVEILLANCE NUMBER:	8TH	YEAR:	35TH

TENDON GENERAL INFORMATION:

IDENTIFICATION #:	62H30	GROUP:	HOOP
# OF WIRES, N_s =	163	TAG LENGTH, L_{tl} (ft) =	155.6250
7mm WIRE AREA (in^2) =	0.05965	TOTAL WIRE AREA, A_s (in^2) =	9.72295

TENDON END SPECIFIC INPUT:	SHOP	FIELD
GREASE CAN LENGTH, L_{gc} (in) =	15.25	15.25
GREASE CAN INSIDE DIAMETER, D_{gc} (in) =	14.125	14.125
INITIAL TENDON SLACK, L_{ts} (in) =	2.6875	
SHIM STACK HEIGHT, H_{ss} (in) =	6.375	6.625
POST TENSIONING SYSTEM SPECIFIC INPUT:	**SHOP**	**FIELD**
TRUMPLATE LENGTH, L_{tp} (in) =	69	27
TRUMPLATE INSIDE DIAMETER, D_{tp} (in) =	11	11
TRANSITION LENGTH, L_{tr} (in) =	2.25	2.25
TRANSITION/SHEATHING DIAMETER, D_{tr} (in) =	5	5
ANCHORHEAD THICKNESS, T_{ah} (in) =	6	
ANCHORHEAD DIAMETER, D_{ah} (in) =	10.5	
SHIM INSIDE DIAMETER, D_{si} (in) =	7	7
SHIM OUTSIDE DIAMETER, D_{so} (in) =	13.5	13.5

OUTPUT INFORMATION

DESCRIPTION	CALCULATION EQUATION	VOLUME (GALLONS)
GREASE CAN VOLUME, V_{gc} =	$\{(PI/4)*[(D_{gc,s})^2*(L_{gc,s})+(D_{gc,f})^2*(L_{gc,f})]\}/231$	20.69
TRUMPLATE VOLUME, V_{tp} =	$[((PI/4)*(D_{tp,s})^2*(L_{tp,s})-(L_{tp,s})*A_s)+((PI/4)*(D_{tp,f})^2*(L_{tp,f}))-(L_{tp,f})*A_s)]/231$	35.45
TRANSITION VOLUME, V_{tr} =	$(1/231)*\{1/3*L_{tr,s}\{(PI/4)[(D_{tp,s})^2+(D_{tr,s})^2]+[(PI/4)^2(D_{tp,s})^2(D_{tr,s})^2]^{1/2}\}+1/3*L_{tr,f}\{(PI/4)[(D_{tp,f})^2+(D_{tr,f})^2]+[(PI/4)^2(D_{tp,f})^2(D_{tr,f})^2]^{1/2}\}-\{(L_{tr,s}+L_{tr,f})*A_s\}\}$	0.84
SHEATHING VOLUME, V_{sh} =	$\{[(PI/4)*(D_{tl})^2-A_s]*[(12*L_{tl})-(L_{tp,s}+L_{tp,f}+L_{tr,s}+L_{tr,f}+L_{ts})]\}/231$	75.71
A-HEAD VOLUME, V_{ah} =	$\{(PI/4)*((D_{ah})^2*(T_{ah}))*2\}/231$	4.50
SHIM VOLUME, V_{sh} =	$\{[(PI/4)*\{(Dso)^2-(D_{si})^2\}+A_s]*(H_{ss,s}+H_{ss,f})\}/231$	6.44
NET DUCT VOLUME, V_T =	$V_{gc}+V_{tp}+V_{sh}+V_{tr}-(V_{ah}+V_{sh})$	**121.75**

PLANT:	CRYSTAL RIVER	UNIT:	N/A	SURVEILLANCE NUMBER:	8TH	YEAR:	35TH

TENDON GENERAL INFORMATION:

IDENTIFICATION #:	62H31	GROUP:	HOOP
# OF WIRES, N_s =	163	TAG LENGTH, L_{tl} (ft) =	155.5625
7mm WIRE AREA (in^2) =	0.05965	TOTAL WIRE AREA, A_s (in^2) =	9.72295

TENDON END SPECIFIC INPUT:	SHOP	FIELD
GREASE CAN LENGTH, L_{gc} (in) =	15.25	15.25
GREASE CAN INSIDE DIAMETER, D_{gc} (in) =	14.125	14.125
INITIAL TENDON SLACK, L_{ts} (in) =	1.75	
SHIM STACK HEIGHT, H_{ss} (in) =	6.25	6
POST TENSIONING SYSTEM SPECIFIC INPUT:	**SHOP**	**FIELD**
TRUMPLATE LENGTH, L_{tp} (in) =	69	27
TRUMPLATE INSIDE DIAMETER, D_{tp} (in) =	11	11
TRANSITION LENGTH, L_{tr} (in) =	2.25	2.25
TRANSITION/SHEATHING DIAMETER, D_{tr} (in) =	5	5
ANCHORHEAD THICKNESS, T_{ah} (in) =	6	
ANCHORHEAD DIAMETER, D_{ah} (in) =	10.5	
SHIM INSIDE DIAMETER, D_{si} (in) =	7	7
SHIM OUTSIDE DIAMETER, D_{so} (in) =	13.5	13.5

OUTPUT INFORMATION

DESCRIPTION	CALCULATION EQUATION	VOLUME (GALLONS)
GREASE CAN VOLUME, V_{gc} =	$\{(PI/4)*[(D_{gc,s})^2*(L_{gc,s})+(D_{gc,f})^2*(L_{gc,f})]\}/231$	20.69
TRUMPLATE VOLUME, V_{tp} =	$[((PI/4)*(D_{tp,s})^2*(L_{tp,s})-(L_{tp,s})*A_s)+((PI/4)*(D_{tp,f})^2*(L_{tp,f}))-(L_{tp,f})*A_s)]/231$	35.45
TRANSITION VOLUME, V_{tr} =	$(1/231)*\{1/3*L_{tr,s}\{(PI/4)[(D_{tp,s})^2+(D_{tr,s})^2]+[(PI/4)^2(D_{tp,s})^2(D_{tr,s})^2]^{1/2}\}+1/3*L_{tr,f}\{(PI/4)[(D_{tp,f})^2+(D_{tr,f})^2]+[(PI/4)^2(D_{tp,f})^2(D_{tr,f})^2]^{1/2}\}-\{(L_{tr,s}+L_{tr,f})*A_s\}\}$	0.84
SHEATHING VOLUME, V_{sh} =	$\{[(PI/4)*(D_{tr})^2-A_s]*[(12*L_{tl})-(L_{tp,s}+L_{tp,f}+L_{tr,s}+L_{tr,f}+L_{ts})]\}/231$	75.71
A-HEAD VOLUME, V_{ah} =	$\{(PI/4)*((D_{ah})^2*(T_{ah}))*2\}/231$	4.50
SHIM VOLUME, V_{sh} =	$\{[(PI/4)*\{(Dso)^2-(D_{si})^2\}+A_s]*(H_{ss,s}+H_{ss,f})\}/231$	6.07
NET DUCT VOLUME, V_T =	$V_{gc}+V_{tp}+V_{sh}+V_{tr}-(V_{sh}+V_{sh})$	**122.13**

PSC Precision Surveillance Corporation	Crystal River Unit 3 8th Period (35th Year) Tendon Surveillance SQ 12.2 Grease Void Volumes	DOCUMENT NO:	CR-N1002-020
		DOCUMENT TYPE:	ENG
		REVISION #	0
		SAFETY RELATED	
		NON-SAFETY RELATED	
		PAGE 29 OF 43	
	PREPARED BY: BAG DATE: 07/10/07	REVIEWED BY: CEC DATE: 08/02/07	

PLANT:	CRYSTAL RIVER	UNIT:	N/A	SURVEILLANCE NUMBER:	8TH	YEAR:	35TH

TENDON GENERAL INFORMATION:

IDENTIFICATION #:	46H06	GROUP:	HOOP
# OF WIRES, N_s =	163	TAG LENGTH, L_{tl} (ft) =	155.7292
7mm WIRE AREA (in^2) =	0.05965	TOTAL WIRE AREA, A_s (in^2) =	9.72295

TENDON END SPECIFIC INPUT:	SHOP	FIELD
GREASE CAN LENGTH, L_{gc} (in) =	15.25	15.25
GREASE CAN INSIDE DIAMETER, D_{gc} (in) =	14.125	14.125
INITIAL TENDON SLACK, L_{ts} (in) =	2.375	
SHIM STACK HEIGHT, H_{ss} (in) =	6.625	6
POST TENSIONING SYSTEM SPECIFIC INPUT:	**SHOP**	**FIELD**
TRUMPLATE LENGTH, L_{tp} (in) =	69	27
TRUMPLATE INSIDE DIAMETER, D_{tp} (in) =	11	11
TRANSITION LENGTH, L_{tr} (in) =	2.25	2.25
TRANSITION/SHEATHING DIAMETER, D_{tr} (in) =	5	5
ANCHORHEAD THICKNESS, T_{ah} (in) =	6	
ANCHORHEAD DIAMETER, D_{ah} (in) =	10.5	
SHIM INSIDE DIAMETER, D_{si} (in) =	7	7
SHIM OUTSIDE DIAMETER, D_{so} (in) =	13.5	13.5

OUTPUT INFORMATION

DESCRIPTION	CALCULATION EQUATION	VOLUME (GALLONS)
GREASE CAN VOLUME, V_{gc} =	$\{(PI/4)*[(D_{gc,s})^2*(L_{gc,s})+(D_{gc,f})^2*(L_{gc,f})]\}/231$	20.69
TRUMPLATE VOLUME, V_{tp} =	$[((PI/4)*(D_{tp,s})^2*(L_{tp,s})-(L_{tp,s})*A_s)+((PI/4)*(D_{tp,f})^2*(L_{tp,f}))-(L_{tp,f})*A_s)]/231$	35.45
TRANSITION VOLUME, V_{tr} =	$(1/231)*\{1/3*L_{tr,s}\{(PI/4)[(D_{tp,s})^2+(D_{tr,s})^2]+[(PI/4)^2(D_{tp,s})^2(D_{tr,s})^2]^{1/2}\}+1/3*L_{tr,f}\{(PI/4)[(D_{tp,f})^2+(D_{tr,f})^2]+[(PI/4)^2(D_{tp,f})^2(D_{tr,f})^2]^{1/2}\}-\{(L_{tr,s}+L_{tr,f})*A_s\}\}$	0.84
SHEATHING VOLUME, V_{sh} =	$\{[(PI/4)*(D_{tr})^2-A_s]*[(12*L_{tl})-(L_{tp,s}+L_{tp,f}+L_{tr,s}+L_{tr,f}+L_{ts})]\}/231$	75.77
A-HEAD VOLUME, V_{ah} =	$\{(PI/4)*((D_{ah})^2*(T_{ah}))*2\}/231$	4.50
SHIM VOLUME, V_{sh} =	$\{[(PI/4)*\{(Dso)^2-(D_{si})^2\}+A_s]*(H_{ss,s}+H_{ss,f})\}/231$	6.25
NET DUCT VOLUME, V_T =	$V_{gc}+V_{tp}+V_{sh}+V_{tr}-(V_{ah}+V_{sh})$	**122.00**

Crystal River Unit 3 8th Period (35th Year) Tendon Surveillance SQ 12.2 Grease Void Volumes	DOCUMENT NO:	CR-N1002-020	
	DOCUMENT TYPE:	ENG	
	REVISION #	0	
	SAFETY RELATED		
	NON-SAFETY RELATED		
	PAGE	30 OF 43	
PREPARED BY: BAG DATE: 07/10/07	REVIEWED BY: CEC	DATE: 08/02/07	

PLANT:	CRYSTAL RIVER	UNIT:	N/A	SURVEILLANCE NUMBER:	8TH	YEAR:	35TH

TENDON GENERAL INFORMATION:

IDENTIFICATION #:	46H07	GROUP:	HOOP
# OF WIRES, N_s =	163	TAG LENGTH, L_{tl} (ft) =	155.8333
7mm WIRE AREA (in^2) =	0.05965	TOTAL WIRE AREA, A_s (in^2) =	9.72295

TENDON END SPECIFIC INPUT:	SHOP	FIELD
GREASE CAN LENGTH, L_{gc} (in) =	15.25	15.25
GREASE CAN INSIDE DIAMETER, D_{gc} (in) =	14.125	14.125
INITIAL TENDON SLACK, L_{ts} (in) =	4	
SHIM STACK HEIGHT, H_{ss} (in) =	7.625	6.625
POST TENSIONING SYSTEM SPECIFIC INPUT:	**SHOP**	**FIELD**
TRUMPLATE LENGTH, L_{tp} (in) =	69	27
TRUMPLATE INSIDE DIAMETER, D_{tp} (in) =	11	11
TRANSITION LENGTH, L_{tr} (in) =	2.25	2.25
TRANSITION/SHEATHING DIAMETER, D_{tr} (in) =	5	5
ANCHORHEAD THICKNESS, T_{ah} (in) =	6	
ANCHORHEAD DIAMETER, D_{ah} (in) =	10.5	
SHIM INSIDE DIAMETER, D_{si} (in) =	7	7
SHIM OUTSIDE DIAMETER, D_{so} (in) =	13.5	13.5

OUTPUT INFORMATION

DESCRIPTION	CALCULATION EQUATION	VOLUME (GALLONS)
GREASE CAN VOLUME, V_{gc} =	$\{(PI/4)*[(D_{gc,s})^2*(L_{gc,s})+(D_{gc,f})^2*(L_{gc,f})]\}/231$	20.69
TRUMPLATE VOLUME, V_{tp} =	$[((PI/4)*(D_{tp,s})^2*(L_{tp,s})-(L_{tp,s})*A_s)+((PI/4)*(D_{tp,f})^2*(L_{tp,f}))-(L_{tp,f})*A_s)]/231$	35.45
TRANSITION VOLUME, V_{tr} =	$(1/231)*\{1/3*L_{tr,s}\{(PI/4)[(D_{tp,s})^2+(D_{tr,s})^2]+[(PI/4)^2(D_{tp,s})^2(D_{tr,s})^2]^{1/2}\}+1/3*L_{tr,f}\{(PI/4)[(D_{tp,f})^2+(D_{tr,f})^2]+[(PI/4)^2(D_{tp,f})^2(D_{tr,f})^2]^{1/2}\}-\{(L_{tr,s}+L_{tr,f})*A_s\}\}$	0.84
SHEATHING VOLUME, V_{sh} =	$\{[(PI/4)*(D_{tr})^2-A_s]*[(12*L_{tl})-(L_{tp,s}+L_{tp,f}+L_{tr,s}+L_{tr,f}+L_{ts})]\}/231$	75.76
A-HEAD VOLUME, V_{ah} =	$\{(PI/4)*((D_{ah})^2*(T_{ah}))*2\}/231$	4.50
SHIM VOLUME, V_{sh} =	$\{[(PI/4)*\{(Dso)^2-(D_{si})^2\}+A_s]*(H_{ss,s}+H_{ss,f})\}/231$	7.06
NET DUCT VOLUME, V_T =	$V_{gc}+V_{tp}+V_{sh}+V_{tr}-(V_{ah}+V_{sh})$	**121.18**

PSC Precision Surveillance Corporation	Crystal River Unit 3 8th Period (35th Year) Tendon Surveillance SQ 12.2 Grease Void Volumes	DOCUMENT NO:	CR-N1002-020
		DOCUMENT TYPE:	ENG
		REVISION #	0
		SAFETY RELATED	
		NON-SAFETY RELATED	
		PAGE	31 OF 43
	PREPARED BY: BAG DATE: 07/10/07	REVIEWED BY: CEC	DATE: 08/02/07

PLANT:	CRYSTAL RIVER	UNIT:	N/A	SURVEILLANCE NUMBER:	8TH	YEAR:	35TH

TENDON GENERAL INFORMATION:

IDENTIFICATION #:	46H08	GROUP:	HOOP
# OF WIRES, N_s =	163	TAG LENGTH, L_{tl} (ft) =	155.7500
7mm WIRE AREA (in^2) =	0.05965	TOTAL WIRE AREA, A_s (in^2) =	9.72295

TENDON END SPECIFIC INPUT:	SHOP	FIELD
GREASE CAN LENGTH, L_{gc} (in) =	15.25	15.25
GREASE CAN INSIDE DIAMETER, D_{gc} (in) =	14.125	14.125
INITIAL TENDON SLACK, L_{ts} (in) =	3.0625	
SHIM STACK HEIGHT, H_{ss} (in) =	7.4375	6.25
POST TENSIONING SYSTEM SPECIFIC INPUT:	**SHOP**	**FIELD**
TRUMPLATE LENGTH, L_{tp} (in) =	69	27
TRUMPLATE INSIDE DIAMETER, D_{tp} (in) =	11	11
TRANSITION LENGTH, L_{tr} (in) =	2.25	2.25
TRANSITION/SHEATHING DIAMETER, D_{tr} (in) =	5	5
ANCHORHEAD THICKNESS, T_{ah} (in) =	6	
ANCHORHEAD DIAMETER, D_{ah} (in) =	10.5	
SHIM INSIDE DIAMETER, D_{si} (in) =	7	7
SHIM OUTSIDE DIAMETER, D_{so} (in) =	13.5	13.5

OUTPUT INFORMATION

DESCRIPTION	CALCULATION EQUATION	VOLUME (GALLONS)
GREASE CAN VOLUME, V_{gc} =	$\{(PI/4)*[(D_{gc,s})^2*(L_{gc,s})+(D_{gc,f})^2*(L_{gc,f})]\}/231$	20.69
TRUMPLATE VOLUME, V_{tp} =	$[((PI/4)*(D_{tp,s})^2*(L_{tp,s})-(L_{tp,s})*A_s)+((PI/4)*(D_{tp,f})^2*(L_{tp,f}))-(L_{tp,f})*A_s)]/231$	35.45
TRANSITION VOLUME, V_{tr} =	$(1/231)*\{1/3*L_{tr,s}\{(PI/4)[(D_{tp,s})^2+(D_{tr,s})^2]+[(PI/4)^2(D_{tp,s})^2(D_{tr,s})^2]^{1/2}\}+1/3*L_{tr,f}\{(PI/4)[(D_{tp,f})^2+(D_{tr,f})^2]+[(PI/4)^2(D_{tp,f})^2(D_{tr,f})^2]^{1/2}\}-\{(L_{tr,s}+L_{tr,f})*A_s\}\}$	0.84
SHEATHING VOLUME, V_{sh} =	$\{[(PI/4)*(D_{tr})^2-A_s]*[(12*L_d)-(L_{tp,s}+L_{tp,f}+L_{tr,s}+L_{tr,f}+L_{ts})]\}/231$	75.75
A-HEAD VOLUME, V_{ah} =	$\{(PI/4)*((D_{ah})^2*(T_{ah}))*2\}/231$	4.50
SHIM VOLUME, V_{sh} =	$\{[(PI/4)*\{(Dso)^2-(D_{si})^2\}+A_s]*(H_{ss,s}+H_{ss,f})\}/231$	6.78
NET DUCT VOLUME, V_T =	$V_{gc}+V_{tp}+V_{sh}+V_{tr}-(V_{ah}+V_{sh})$	**121.46**

PLANT:	CRYSTAL RIVER	UNIT:	N/A	SURVEILLANCE NUMBER:	8TH	YEAR:	35TH

TENDON GENERAL INFORMATION:

IDENTIFICATION #:	D128	GROUP:	DOME
# OF WIRES, N_s =	161	TAG LENGTH, L_{tl} (ft) =	146.2083
7mm WIRE AREA (in^2) =	0.05965	TOTAL WIRE AREA, A_s (in^2) =	9.60365

TENDON END SPECIFIC INPUT:	SHOP	FIELD
GREASE CAN LENGTH, L_{gc} (in) =	15.25	15.25
GREASE CAN INSIDE DIAMETER, D_{gc} (in) =	14.125	14.125
INITIAL TENDON SLACK, L_{ts} (in) =	2.5	
SHIM STACK HEIGHT, H_{ss} (in) =	6	6

POST TENSIONING SYSTEM SPECIFIC INPUT:	SHOP	FIELD
TRUMPLATE LENGTH, L_{tp} (in) =	69	27
TRUMPLATE INSIDE DIAMETER, D_{tp} (in) =	11	11
TRANSITION LENGTH, L_{tr} (in) =	2.25	2.25
TRANSITION/SHEATHING DIAMETER, D_{tr} (in) =	5	5
ANCHORHEAD THICKNESS, T_{ah} (in) =	6	
ANCHORHEAD DIAMETER, D_{ah} (in) =	10.5	
SHIM INSIDE DIAMETER, D_{si} (in) =	7	7
SHIM OUTSIDE DIAMETER, D_{so} (in) =	13.5	13.5

OUTPUT INFORMATION

DESCRIPTION	CALCULATION EQUATION	VOLUME (GALLONS)
GREASE CAN VOLUME, V_{gc} =	$\{(PI/4)*[(D_{gc,s})^2*(L_{gc,s})+(D_{gc,f})^2*(L_{gc,f})]\}/231$	20.69
TRUMPLATE VOLUME, V_{tp} =	$[((PI/4)*(D_{tp,s})^2*(L_{tp,s})-(L_{tp,s})*A_s)+((PI/4)*(D_{tp,f})^2*(L_{tp,f}))-(L_{tp,f})*A_s)]/231$	35.50
TRANSITION VOLUME, V_{tr} =	$(1/231)*\{1/3*L_{tr,s}\{(PI/4)[(D_{tp,s})^2+(D_{tr,s})^2]+[(PI/4)^2(D_{tp,s})^2(D_{tr,s})^2]^{1/2}\}+1/3*L_{tr,f}\{(PI/4)[(D_{tp,f})^2+(D_{tr,f})^2]+[(PI/4)^2(D_{tp,f})^2(D_{tr,f})^2]^{1/2}\}-\{(L_{tr,s}+L_{tr,f})*A_s\}\}$	0.84
SHEATHING VOLUME, V_{sh} =	$\{[(PI/4)*(D_{tr})^2-A_s]*[(12*L_{tl})-(L_{tp,s}+L_{tp,f}+L_{tr,s}+L_{tr,f}+L_{ts})]\}/231$	71.72
A-HEAD VOLUME, V_{ah} =	$\{(PI/4)*((D_{ah})^2*(T_{ah}))*2\}/231$	4.50
SHIM VOLUME, V_{sh} =	$\{[(PI/4)*\{(Dso)^2-(D_{si})^2\}+A_s]*(H_{ss,s}+H_{ss,f})\}/231$	5.94
NET DUCT VOLUME, V_T =	$V_{gc}+V_{tp}+V_{sh}+V_{tr}-(V_{ah}+V_{sh})$	**118.31**

PLANT:	CRYSTAL RIVER	UNIT:	N/A	SURVEILLANCE NUMBER:	8TH	YEAR:	35TH

TENDON GENERAL INFORMATION:

IDENTIFICATION #:	D129	GROUP:	DOME
# OF WIRES, N_s =	163	TAG LENGTH, L_{tl} (ft) =	144.5208
7mm WIRE AREA (in^2) =	0.05965	TOTAL WIRE AREA, A_s (in^2) =	9.72295

TENDON END SPECIFIC INPUT:	SHOP	FIELD
GREASE CAN LENGTH, L_{gc} (in) =	15.25	15.25
GREASE CAN INSIDE DIAMETER, D_{gc} (in) =	14.125	14.125
INITIAL TENDON SLACK, L_{ts} (in) =	2.625	
SHIM STACK HEIGHT, H_{ss} (in) =	6.25	6
POST TENSIONING SYSTEM SPECIFIC INPUT:	**SHOP**	**FIELD**
TRUMPLATE LENGTH, L_{tp} (in) =	69	27
TRUMPLATE INSIDE DIAMETER, D_{tp} (in) =	11	11
TRANSITION LENGTH, L_{tr} (in) =	2.25	2.25
TRANSITION/SHEATHING DIAMETER, D_{tr} (in) =	5	5
ANCHORHEAD THICKNESS, T_{ah} (in) =	6	
ANCHORHEAD DIAMETER, D_{ah} (in) =	10.5	
SHIM INSIDE DIAMETER, D_{si} (in) =	7	7
SHIM OUTSIDE DIAMETER, D_{so} (in) =	13.5	13.5

OUTPUT INFORMATION

DESCRIPTION	CALCULATION EQUATION	VOLUME (GALLONS)
GREASE CAN VOLUME, V_{gc} =	$\{(PI/4)*[(D_{gc,s})^2*(L_{gc,s})+(D_{gc,f})^2*(L_{gc,f})]\}/231$	20.69
TRUMPLATE VOLUME, V_{tp} =	$[((PI/4)*(D_{tp,s})^2*(L_{tp,s})-(L_{tp,s})*A_s)+((PI/4)*(D_{tp,f})^2*(L_{tp,f}))-(L_{tp,f})*A_s)]/231$	35.45
TRANSITION VOLUME, V_{tr} =	$(1/231)*\{1/3*L_{tr,s}\{(PI/4)[(D_{tp,s})^2+(D_{tr,s})^2]+[(PI/4)^2(D_{tp,s})^2(D_{tr,s})^2]^{1/2}\}+1/3*L_{tr,f}\{(PI/4)[(D_{tp,f})^2+(D_{tr,f})^2]+[(PI/4)^2(D_{tp,f})^2(D_{tr,f})^2]^{1/2}\}-\{(L_{tr,s}+L_{tr,f})*A_s\}\}$	0.84
SHEATHING VOLUME, V_{sh} =	$\{[(PI/4)*(D_{tr})^2-A_s]*[(12*L_s)-(L_{tp,s}+L_{tp,f}+L_{tr,s}+L_{tr,f}+L_{ts})]\}/231$	69.99
A-HEAD VOLUME, V_{ah} =	$\{(PI/4)*((D_{ah})^2*(T_{ah}))*2\}/231$	4.50
SHIM VOLUME, V_{sh} =	$\{[(PI/4)*\{(Dso)^2-(D_{si})^2\}+A_s]*(H_{ss,s}+H_{ss,f})\}/231$	6.07
NET DUCT VOLUME, V_T =	$V_{gc}+V_{tp}+V_{sh}+V_{tr}-(V_{ah}+V_{sh})$	**116.41**

PLANT:	CRYSTAL RIVER	UNIT:	N/A	SURVEILLANCE NUMBER:	8TH	YEAR:	35TH

TENDON GENERAL INFORMATION:

IDENTIFICATION #:	D130	GROUP:	DOME
# OF WIRES, N_s =	163	TAG LENGTH, L_{tl} (ft) =	142.6250
7mm WIRE AREA (in^2) =	0.05965	TOTAL WIRE AREA, A_s (in^2) =	9.72295

TENDON END SPECIFIC INPUT:	SHOP	FIELD
GREASE CAN LENGTH, L_{gc} (in) =	15.25	15.25
GREASE CAN INSIDE DIAMETER, D_{gc} (in) =	14.125	14.125
INITIAL TENDON SLACK, L_{ts} (in) =	1	
SHIM STACK HEIGHT, H_{ss} (in) =	5.625	5.375
POST TENSIONING SYSTEM SPECIFIC INPUT:	**SHOP**	**FIELD**
TRUMPLATE LENGTH, L_{tp} (in) =	69	27
TRUMPLATE INSIDE DIAMETER, D_{tp} (in) =	11	11
TRANSITION LENGTH, L_{tr} (in) =	2.25	2.25
TRANSITION/SHEATHING DIAMETER, D_{tr} (in) =	5	5
ANCHORHEAD THICKNESS, T_{ah} (in) =	6	
ANCHORHEAD DIAMETER, D_{ah} (in) =	10.5	
SHIM INSIDE DIAMETER, D_{si} (in) =	7	7
SHIM OUTSIDE DIAMETER, D_{so} (in) =	13.5	13.5

OUTPUT INFORMATION

DESCRIPTION	CALCULATION EQUATION	VOLUME (GALLONS)
GREASE CAN VOLUME, V_{gc} =	$\{(PI/4)*[(D_{gc,s})^2*(L_{gc,s})+(D_{gc,f})^2*(L_{gc,f})]\}/231$	20.69
TRUMPLATE VOLUME, V_{tp} =	$[((PI/4)*(D_{tp,s})^2*(L_{tp,s})-(L_{tp,s})*A_s)+((PI/4)*(D_{tp,f})^2*(L_{tp,f}))-(L_{tp,f})*A_s)]/231$	35.45
TRANSITION VOLUME, V_{tr} =	$(1/231)*\{1/3*L_{tr,s}\{(PI/4)[(D_{tp,s})^2+(D_{tr,s})^2]+[(PI/4)^2(D_{tp,s})^2(D_{tr,s})^2]^{1/2}\}+1/3*L_{tr,f}\{(PI/4)[(D_{tp,f})^2+(D_{tr,f})^2]+[(PI/4)^2(D_{tp,f})^2(D_{tr,f})^2]^{1/2}\}-((L_{tr,s}+L_{tr,f})*A_s)\}$	0.84
SHEATHING VOLUME, V_{sh} =	$\{[(PI/4)*(D_{tr})^2-A_s]*[(12*L_{tl})-(L_{tp,s}+L_{tp,f}+L_{tr,s}+L_{tr,f}+L_{ts})]\}/231$	69.08
A-HEAD VOLUME, V_{ah} =	$\{(PI/4)*((D_{ah})^2*(T_{ah}))*2\}/231$	4.50
SHIM VOLUME, V_{sh} =	$\{[(PI/4)*((Dso)^2-(D_{si})^2]+A_s]*(H_{ss,s}+H_{ss,f})\}/231$	5.45
NET DUCT VOLUME, V_T =	$V_{gc}+V_{tp}+V_{sh}+V_{tr}-(V_{ah}+V_{sh})$	**116.12**

PSC Precision Surveillance Corporation	Crystal River Unit 3 8th Period (35th Year) Tendon Surveillance SQ 12.2 Grease Void Volumes	DOCUMENT NO:	CR-N1002-020
		DOCUMENT TYPE:	ENG
		REVISION #	0
		SAFETY RELATED	
		NON-SAFETY RELATED	
		PAGE	35 OF 43
	PREPARED BY: BAG DATE: 07/10/07	REVIEWED BY: CEC	DATE: 08/02/07

PLANT:	CRYSTAL RIVER	UNIT:	N/A	SURVEILLANCE NUMBER:	8TH	YEAR:	35TH

TENDON GENERAL INFORMATION:

IDENTIFICATION #:	D211	GROUP:	DOME
# OF WIRES, N_s =	163	TAG LENGTH, L_{tl} (ft) =	142.0417
7mm WIRE AREA (in^2) =	0.05965	TOTAL WIRE AREA, A_s (in^2) =	9.72295

TENDON END SPECIFIC INPUT:	SHOP	FIELD
GREASE CAN LENGTH, L_{gc} (in) =	15.25	15.25
GREASE CAN INSIDE DIAMETER, D_{gc} (in) =	14.125	14.125
INITIAL TENDON SLACK, L_{ts} (in) =	0.75	
SHIM STACK HEIGHT, H_{ss} (in) =	5.5	6
POST TENSIONING SYSTEM SPECIFIC INPUT:	**SHOP**	**FIELD**
TRUMPLATE LENGTH, L_{tp} (in) =	69	27
TRUMPLATE INSIDE DIAMETER, D_{tp} (in) =	11	11
TRANSITION LENGTH, L_{tr} (in) =	2.25	2.25
TRANSITION/SHEATHING DIAMETER, D_{tr} (in) =	5	5
ANCHORHEAD THICKNESS, T_{ah} (in) =	6	
ANCHORHEAD DIAMETER, D_{ah} (in) =	10.5	
SHIM INSIDE DIAMETER, D_{si} (in) =	7	7
SHIM OUTSIDE DIAMETER, D_{so} (in) =	13.5	13.5

OUTPUT INFORMATION

DESCRIPTION	CALCULATION EQUATION	VOLUME (GALLONS)
GREASE CAN VOLUME, V_{gc} =	$\{(PI/4)*[(D_{gc,s})^2*(L_{gc,s})+(D_{gc,f})^2*(L_{gc,f})]\}/231$	20.69
TRUMPLATE VOLUME, V_{tp} =	$[((PI/4)*(D_{tp,s})^2*(L_{tp,s})-(L_{tp,s})*A_s)+((PI/4)*(D_{tp,f})^2*(L_{tp,f}))-(L_{tp,f})*A_s)]/231$	35.45
TRANSITION VOLUME, V_{tr} =	$(1/231)*\{1/3*L_{tr,s}\{(PI/4)[(D_{tp,s})^2+(D_{tr,s})^2]+[(PI/4)^2(D_{tp,s})^2(D_{tr,s})^2]^{1/2}\}+1/3*L_{tr,f}\{(PI/4)[(D_{tp,f})^2+(D_{tr,f})^2]+[(PI/4)^2(D_{tp,f})^2(D_{tr,f})^2]^{1/2}\}-\{(L_{tr,s}+L_{tr,f})*A_s\}\}$	0.84
SHEATHING VOLUME, V_{sh} =	$\{[(PI/4)*(D_{tr})^2-A_s]*[(12*L_{tl})-(L_{tp,s}+L_{tp,f}+L_{tr,s}+L_{tr,f}+L_{ts})]\}/231$	68.79
A-HEAD VOLUME, V_{ah} =	$\{(PI/4)*((D_{ah})^2*(T_{ah}))*2\}/231$	4.50
SHIM VOLUME, V_{sh} =	$\{[(PI/4)*((Dso)^2-(D_{si})^2)+A_s]*(H_{ss,s}+H_{ss,f})\}/231$	5.69
NET DUCT VOLUME, V_T =	$V_{gc}+V_{tp}+V_{sh}+V_{tr}-(V_{ah}+V_{sh})$	**115.58**

PLANT:	CRYSTAL RIVER	UNIT:	N/A	SURVEILLANCE NUMBER:	8TH	YEAR:	35TH

TENDON GENERAL INFORMATION:

IDENTIFICATION #:	D212	GROUP:	DOME
# OF WIRES, N_s =	163	TAG LENGTH, L_{tl} (ft) =	144.2500
7mm WIRE AREA (in^2) =	0.05965	TOTAL WIRE AREA, A_s (in^2) =	9.72295

TENDON END SPECIFIC INPUT:	SHOP	FIELD
GREASE CAN LENGTH, L_{gc} (in) =	15.25	15.25
GREASE CAN INSIDE DIAMETER, D_{gc} (in) =	14.125	14.125
INITIAL TENDON SLACK, L_{ts} (in) =	3.25	
SHIM STACK HEIGHT, H_{ss} (in) =	6.375	6.375
POST TENSIONING SYSTEM SPECIFIC INPUT:	**SHOP**	**FIELD**
TRUMPLATE LENGTH, L_{tp} (in) =	69	27
TRUMPLATE INSIDE DIAMETER, D_{tp} (in) =	11	11
TRANSITION LENGTH, L_{tr} (in) =	2.25	2.25
TRANSITION/SHEATHING DIAMETER, D_{tr} (in) =	5	5
ANCHORHEAD THICKNESS, T_{ah} (in) =	6	
ANCHORHEAD DIAMETER, D_{ah} (in) =	10.5	
SHIM INSIDE DIAMETER, D_{si} (in) =	7	7
SHIM OUTSIDE DIAMETER, D_{so} (in) =	13.5	13.5

OUTPUT INFORMATION

DESCRIPTION	CALCULATION EQUATION	VOLUME (GALLONS)
GREASE CAN VOLUME, V_{gc} =	$\{(PI/4)*[(D_{gc,s})^2*(L_{gc,s})+(D_{gc,f})^2*(L_{gc,f})]\}/231$	20.69
TRUMPLATE VOLUME, V_{tp} =	$[((PI/4)*(D_{tp,s})^2*(L_{tp,s})-(L_{tp,s})*A_s)+((PI/4)*(D_{tp,f})^2*(L_{tp,f}))-(L_{tp,f})*A_s)]/231$	35.45
TRANSITION VOLUME, V_{tr} =	$(1/231)*\{1/3*L_{tr,s}\{(PI/4)[(D_{tp,s})^2+(D_{tr,s})^2]+[(PI/4)^2(D_{tp,s})^2(D_{tr,s})^2]^{1/2}\}+1/3*L_{tr,f}\{(PI/4)[(D_{tp,f})^2+(D_{tr,f})^2]+[(PI/4)^2(D_{tp,f})^2(D_{tr,f})^2]^{1/2}\}-\{(L_{tr,s}+L_{tr,f})*A_s\}\}$	0.84
SHEATHING VOLUME, V_{sh} =	$\{[(PI/4)*(D_{tr})^2-A_s]*[(12*L_{tl})-(L_{tp,s}+L_{tp,f}+L_{tr,s}+L_{tr,f}+L_{ts})]\}/231$	69.82
A-HEAD VOLUME, V_{ah} =	$\{(PI/4)*((D_{ah})^2*(T_{ah}))*2\}/231$	4.50
SHIM VOLUME, V_{sh} =	$\{[(PI/4)*\{(Dso)^2-(D_{si})^2\}+A_s]*(H_{ss,s}+H_{ss,f})\}/231$	6.31
NET DUCT VOLUME, V_T =	$V_{gc}+V_{tp}+V_{sh}+V_{tr}-(V_{ah}+V_{sh})$	**115.99**

PLANT:	CRYSTAL RIVER	UNIT:	N/A	SURVEILLANCE NUMBER:	8TH	YEAR:	35TH

TENDON GENERAL INFORMATION:

IDENTIFICATION #:	D213		GROUP:	DOME
# OF WIRES, N_s =	163		TAG LENGTH, L_{tl} (ft) =	146.1875
7mm WIRE AREA (in^2) =	0.05965		TOTAL WIRE AREA, A_s (in^2) =	9.72295

TENDON END SPECIFIC INPUT:	SHOP	FIELD
GREASE CAN LENGTH, L_{gc} (in) =	15.25	15.25
GREASE CAN INSIDE DIAMETER, D_{gc} (in) =	14.125	14.125
INITIAL TENDON SLACK, L_{ts} (in) =	3.5	
SHIM STACK HEIGHT, H_{ss} (in) =	6.625	6.375

POST TENSIONING SYSTEM SPECIFIC INPUT:	SHOP	FIELD
TRUMPLATE LENGTH, L_{tp} (in) =	69	27
TRUMPLATE INSIDE DIAMETER, D_{tp} (in) =	11	11
TRANSITION LENGTH, L_{tr} (in) =	2.25	2.25
TRANSITION/SHEATHING DIAMETER, D_{tr} (in) =	5	5
ANCHORHEAD THICKNESS, T_{ah} (in) =	6	
ANCHORHEAD DIAMETER, D_{ah} (in) =	10.5	
SHIM INSIDE DIAMETER, D_{si} (in) =	7	7
SHIM OUTSIDE DIAMETER, D_{so} (in) =	13.5	13.5

OUTPUT INFORMATION

DESCRIPTION	CALCULATION EQUATION	VOLUME (GALLONS)
GREASE CAN VOLUME, V_{gc} =	$\{(PI/4)*[(D_{gc,s})^2*(L_{gc,s})+(D_{gc,f})^2*(L_{gc,f})]\}/231$	20.69
TRUMPLATE VOLUME, V_{tp} =	$[((PI/4)*(D_{tp,s})^2*(L_{tp,s})-(L_{tp,s})*A_s)+((PI/4)*(D_{tp,f})^2*(L_{tp,f}))-(L_{tp,f})*A_s)]/231$	35.45
TRANSITION VOLUME, V_{tr} =	$(1/231)*\{1/3*L_{tr,s}((PI/4)[(D_{tp,s})^2+(D_{tr,s})^2]+[(PI/4)^2(D_{tp,s})^2(D_{tr,s})^2]^{1/2}\}+1/3*L_{tr,f}((PI/4)[(D_{tp,f})^2+(D_{tr,f})^2]+[(PI/4)^2(D_{tp,f})^2(D_{tr,f})^2]^{1/2})-\{(L_{tr,s}+L_{tr,f})*A_s)\}$	0.84
SHEATHING VOLUME, V_{sh} =	$\{[(PI/4)*(D_{tr})^2-A_s]*[(12*L_{tl})-(L_{tp,s}+L_{tp,f}+L_{tr,s}+L_{tr,f}+L_{ts})]\}/231$	70.81
A-HEAD VOLUME, V_{ah} =	$\{(PI/4)*((D_{ah})^2*(T_{ah}))*2\}/231$	4.50
SHIM VOLUME, V_{sh} =	$\{[(PI/4)*\{(Dso)^2-(D_{si})^2\}+A_s]*(H_{ss,s}+H_{ss,f})\}/231$	6.44
NET DUCT VOLUME, V_T =	$V_{gc}+V_{tp}+V_{sh}+V_{tr}-(V_{ah}+V_{sh})$	**116.85**

Crystal River Unit 3 8th Period (35th Year) Tendon Surveillance SQ 12.2 Grease Void Volumes	DOCUMENT NO:	CR-N1002-020	
	DOCUMENT TYPE:	ENG	
	REVISION #	0	
	SAFETY RELATED		
	NON-SAFETY RELATED		
	PAGE	38 OF 43	

PREPARED BY: BAG DATE: 07/10/07 REVIEWED BY: CEC DATE: 08/02/07

PLANT:	CRYSTAL RIVER	UNIT:	N/A	SURVEILLANCE NUMBER:	8TH	YEAR:	35TH

TENDON GENERAL INFORMATION:

IDENTIFICATION #:	D237	GROUP:	DOME
# OF WIRES, N_s =	163	TAG LENGTH, L_{tl} (ft) =	123.2292
7mm WIRE AREA (in^2) =	0.05965	TOTAL WIRE AREA, A_s (in^2) =	9.72295

TENDON END SPECIFIC INPUT:	SHOP	FIELD
GREASE CAN LENGTH, L_{gc} (in) =	15.25	15.25
GREASE CAN INSIDE DIAMETER, D_{gc} (in) =	14.125	14.125
INITIAL TENDON SLACK, L_{ts} (in) =	4.5	
SHIM STACK HEIGHT, H_{ss} (in) =	6.75	6.375
POST TENSIONING SYSTEM SPECIFIC INPUT:	**SHOP**	**FIELD**
TRUMPLATE LENGTH, L_{tp} (in) =	69	27
TRUMPLATE INSIDE DIAMETER, D_{tp} (in) =	11	11
TRANSITION LENGTH, L_{tr} (in) =	2.25	2.25
TRANSITION/SHEATHING DIAMETER, D_{tr} (in) =	5	5
ANCHORHEAD THICKNESS, T_{ah} (in) =	6	
ANCHORHEAD DIAMETER, D_{ah} (in) =	10.5	
SHIM INSIDE DIAMETER, D_{si} (in) =	7	7
SHIM OUTSIDE DIAMETER, D_{so} (in) =	13.5	13.5

OUTPUT INFORMATION

DESCRIPTION	CALCULATION EQUATION	VOLUME (GALLONS)
GREASE CAN VOLUME, V_{gc} =	$\{(PI/4)*[(D_{gc,s})^2*(L_{gc,s})+(D_{gc,f})^2*(L_{gc,f})]\}/231$	20.69
TRUMPLATE VOLUME, V_{tp} =	$[((PI/4)*(D_{tp,s})^2*(L_{tp,s})-(L_{tp,s})*A_s)+((PI/4)*(D_{tp,f})^2*(L_{tp,f}))-(L_{tp,f})*A_s)]/231$	35.45
TRANSITION VOLUME, V_{tr} =	$(1/231)*\{1/3*L_{tr,s}\{(PI/4)[(D_{tp,s})^2+(D_{tr,s})^2]+[(PI/4)^2(D_{tp,s})^2(D_{tr,s})^2]^{1/2}\}+1/3*L_{tr,f}\{(PI/4)[(D_{tp,f})^2+(D_{tr,f})^2]+[(PI/4)^2(D_{tp,f})^2(D_{tr,f})^2]^{1/2}\}-\{(L_{tr,s}+L_{tr,f})*A_s\}\}$	0.84
SHEATHING VOLUME, V_{sh} =	$\{[(PI/4)*(D_{tr})^2-A_s]*[(12*L_{tl})-(L_{tp,s}+L_{tp,f}+L_{tr,s}+L_{tr,f}+L_{ts})]\}/231$	58.95
A-HEAD VOLUME, V_{ah} =	$\{(PI/4)*((D_{ah})^2*(T_{ah}))*2\}/231$	4.50
SHIM VOLUME, V_{sh} =	$\{[(PI/4)*((Dso)^2-(D_{si})^2]+A_s]*(H_{ss,s}+H_{ss,f})\}/231$	6.50
NET DUCT VOLUME, V_T =	$V_{gc}+V_{tp}+V_{sh}+V_{tr}-(V_{ah}+V_{sh})$	**104.93**

PLANT:	CRYSTAL RIVER	UNIT:	N/A	SURVEILLANCE NUMBER:	8TH	YEAR:	35TH

TENDON GENERAL INFORMATION:

IDENTIFICATION #:	D238	GROUP:	DOME
# OF WIRES, N_s =	163	TAG LENGTH, L_{tl} (ft) =	118.9792
7mm WIRE AREA (in^2) =	0.05965	TOTAL WIRE AREA, A_s (in^2) =	9.72295

TENDON END SPECIFIC INPUT:	SHOP	FIELD
GREASE CAN LENGTH, L_{gc} (in) =	15.25	15.25
GREASE CAN INSIDE DIAMETER, D_{gc} (in) =	14.125	14.125
INITIAL TENDON SLACK, L_{ts} (in) =	5.125	
SHIM STACK HEIGHT, H_{ss} (in) =	7	6.375

POST TENSIONING SYSTEM SPECIFIC INPUT:	SHOP	FIELD
TRUMPLATE LENGTH, L_{tp} (in) =	69	27
TRUMPLATE INSIDE DIAMETER, D_{tp} (in) =	11	11
TRANSITION LENGTH, L_{tr} (in) =	2.25	2.25
TRANSITION/SHEATHING DIAMETER, D_{tr} (in) =	5	5
ANCHORHEAD THICKNESS, T_{ah} (in) =	6	
ANCHORHEAD DIAMETER, D_{ah} (in) =	10.5	
SHIM INSIDE DIAMETER, D_{si} (in) =	7	7
SHIM OUTSIDE DIAMETER, D_{so} (in) =	13.5	13.5

OUTPUT INFORMATION

DESCRIPTION	CALCULATION EQUATION	VOLUME (GALLONS)
GREASE CAN VOLUME, V_{gc} =	$\{(PI/4)*[(D_{gc,s})^2*(L_{gc,s})+(D_{gc,f})^2*(L_{gc,f})]\}/231$	20.69
TRUMPLATE VOLUME, V_{tp} =	$[((PI/4)*(D_{tp,s})^2*(L_{tp,s})-(L_{tp,s})*A_s)+((PI/4)*(D_{tp,f})^2*(L_{tp,f}))-(L_{tp,f})*A_s)]/231$	35.45
TRANSITION VOLUME, V_{tr} =	$(1/231)*\{1/3*L_{tr,s}((PI/4)[(D_{tp,s})^2+(D_{tr,s})^2]+[(PI/4)^2(D_{tp,s})^2(D_{tr,s})^2]^{1/2}\}+1/3*L_{tr,f}((PI/4)[(D_{tp,f})^2+(D_{tr,f})^2]+[(PI/4)^2(D_{tp,f})^2(D_{tr,f})^2]^{1/2})-\{(L_{tr,s}+L_{tr,f})*A_s)\}$	0.84
SHEATHING VOLUME, V_{sh} =	$\{[(PI/4)*(D_{tr})^2-A_s]*[(12*L_{tl})-(L_{tp,s}+L_{tp,f}+L_{tr,s}+L_{tr,f}+L_{ts})]\}/231$	56.73
A-HEAD VOLUME, V_{ah} =	$\{(PI/4)*((D_{ah})^2*(T_{ah}))*2\}/231$	4.50
SHIM VOLUME, V_{sh} =	$\{[(PI/4)*\{(Dso)^2-(D_{si})^2\}+A_s]*(H_{ss,s}+H_{ss,f})\}/231$	6.62
NET DUCT VOLUME, V_T =	$V_{gc}+V_{tp}+V_{sh}+V_{tr}-(V_{ah}+V_{sh})$	**102.59**

PLANT:	CRYSTAL RIVER	UNIT:	N/A	SURVEILLANCE NUMBER:	8TH	YEAR:	35TH

TENDON GENERAL INFORMATION:

IDENTIFICATION #:	D239	GROUP:	DOME
# OF WIRES, N_s =	163	TAG LENGTH, L_{tl} (ft) =	114.4167
7mm WIRE AREA (in^2) =	0.05965	TOTAL WIRE AREA, A_s (in^2) =	9.72295

TENDON END SPECIFIC INPUT:	SHOP	FIELD
GREASE CAN LENGTH, L_{gc} (in) =	15.25	15.25
GREASE CAN INSIDE DIAMETER, D_{gc} (in) =	14.125	14.125
INITIAL TENDON SLACK, L_{ts} (in) =	5.125	
SHIM STACK HEIGHT, H_{ss} (in) =	6	7

POST TENSIONING SYSTEM SPECIFIC INPUT:	SHOP	FIELD
TRUMPLATE LENGTH, L_{tp} (in) =	69	27
TRUMPLATE INSIDE DIAMETER, D_{tp} (in) =	11	11
TRANSITION LENGTH, L_{tr} (in) =	2.25	2.25
TRANSITION/SHEATHING DIAMETER, D_{tr} (in) =	5	5
ANCHORHEAD THICKNESS, T_{ah} (in) =	6	
ANCHORHEAD DIAMETER, D_{ah} (in) =	10.5	
SHIM INSIDE DIAMETER, D_{si} (in) =	7	7
SHIM OUTSIDE DIAMETER, D_{so} (in) =	13.5	13.5

OUTPUT INFORMATION

DESCRIPTION	CALCULATION EQUATION	VOLUME (GALLONS)
GREASE CAN VOLUME, V_{gc} =	$\{(PI/4)*[(D_{gc,s})^2*(L_{gc,s})+(D_{gc,f})^2*(L_{gc,f})]\}/231$	20.69
TRUMPLATE VOLUME, V_{tp} =	$[((PI/4)*(D_{tp,s})^2*(L_{tp,s})-(L_{tp,s})*A_s)+((PI/4)*(D_{tp,f})^2*(L_{tp,f})-(L_{tp,f})*A_s)]/231$	35.45
TRANSITION VOLUME, V_{tr} =	$(1/231)*\{1/3*L_{tr,s}\{(PI/4)[(D_{tp,s})^2+(D_{tr,s})^2]+[(PI/4)^2(D_{tp,s})^2(D_{tr,s})^2]^{1/2}\}+1/3*L_{tr,f}\{(PI/4)[(D_{tp,f})^2+(D_{tr,f})^2]+[(PI/4)^2(D_{tp,f})^2(D_{tr,f})^2]^{1/2}\}-\{(L_{tr,s}+L_{tr,f})*A_s\}\}$	0.84
SHEATHING VOLUME, V_{sh} =	$\{[(PI/4)*(D_{tr})^2-A_s]*[(12*L_{tl})-(L_{tp,s}+L_{tp,f}+L_{tr,s}+L_{tr,f}+L_{ts})]\}/231$	54.38
A-HEAD VOLUME, V_{ah} =	$\{(PI/4)*((D_{ah})^2*(T_{ah}))*2\}/231$	4.50
SHIM VOLUME, V_{sh} =	$\{[(PI/4)*\{(Dso)^2-(D_{si})^2\}+A_s]*(H_{ss,s}+H_{ss,f})\}/231$	6.44
NET DUCT VOLUME, V_T =	$V_{gc}+V_{tp}+V_{sh}+V_{tr}-(V_{ah}+V_{sh})$	**100.43**

Crystal River Unit 3
8th Period (35th Year) Tendon Surveillance
SQ 12.2 Grease Void Volumes

PREPARED BY: BAG DATE: 07/10/07 REVIEWED BY: CEC DATE: 08/02/07

PLANT:	CRYSTAL RIVER	UNIT:	N/A	SURVEILLANCE NUMBER:	8TH	YEAR:	35TH

TENDON GENERAL INFORMATION:

IDENTIFICATION #:	D336	GROUP:	DOME
# OF WIRES, N_s =	163	TAG LENGTH, L_{tl} (ft) =	128.4375
7mm WIRE AREA (in^2) =	0.05965	TOTAL WIRE AREA, A_s (in^2) =	9.72295

TENDON END SPECIFIC INPUT:	SHOP	FIELD
GREASE CAN LENGTH, L_{gc} (in) =	15.25	15.25
GREASE CAN INSIDE DIAMETER, D_{gc} (in) =	14.125	14.125
INITIAL TENDON SLACK, L_{ts} (in) =	4.375	
SHIM STACK HEIGHT, H_{ss} (in) =	6.375	6.75
POST TENSIONING SYSTEM SPECIFIC INPUT:	**SHOP**	**FIELD**
TRUMPLATE LENGTH, L_{tp} (in) =	69	27
TRUMPLATE INSIDE DIAMETER, D_{tp} (in) =	11	11
TRANSITION LENGTH, L_{tr} (in) =	2.25	2.25
TRANSITION/SHEATHING DIAMETER, D_{tr} (in) =	5	5
ANCHORHEAD THICKNESS, T_{ah} (in) =	6	
ANCHORHEAD DIAMETER, D_{ah} (in) =	10.5	
SHIM INSIDE DIAMETER, D_{si} (in) =	7	7
SHIM OUTSIDE DIAMETER, D_{so} (in) =	13.5	13.5

OUTPUT INFORMATION

DESCRIPTION	CALCULATION EQUATION	VOLUME (GALLONS)
GREASE CAN VOLUME, V_{gc} =	$\{(PI/4)*[(D_{gc,s})^2*(L_{gc,s})+(D_{gc,f})^2*(L_{gc,f})]\}/231$	20.69
TRUMPLATE VOLUME, V_{tp} =	$[((PI/4)*(D_{tp,s})^2*(L_{tp,s})-(L_{tp,s})*A_s)+((PI/4)*(D_{tp,f})^2*(L_{tp,f}))-(L_{tp,f})*A_s)]/231$	35.45
TRANSITION VOLUME, V_{tr} =	$(1/231)*\{1/3*L_{tr,s}\{(PI/4)[(D_{tp,s})^2+(D_{tr,s})^2]+[(PI/4)^2(D_{tp,s})^2(D_{tr,s})^2]^{1/2}\}+1/3*L_{tr,f}\{(PI/4)[(D_{tp,f})^2+(D_{tr,f})^2]+[(PI/4)^2(D_{tp,f})^2(D_{tr,f})^2]^{1/2}\}-\{(L_{tr,s}+L_{tr,f})*A_s\}\}$	0.84
SHEATHING VOLUME, V_{sh} =	$\{[(PI/4)*(D_{tr})^2-A_s]*[(12*L_{tl})-(L_{tp,s}+L_{tp,f}+L_{tr,s}+L_{tr,f}+L_{ts})]\}/231$	61.63
A-HEAD VOLUME, V_{ah} =	$\{(PI/4)*((D_{ah})^2*(T_{ah}))*2\}/231$	4.50
SHIM VOLUME, V_{sh} =	$\{[(PI/4)*\{(Dso)^2-(D_{si})^2\}+A_s]*(H_{ss,s}+H_{ss,f})\}/231$	6.50
NET DUCT VOLUME, V_T =	$V_{gc}+V_{tp}+V_{sh}+V_{tr}-(V_{ah}+V_{sh})$	**107.62**

PSC Precision Surveillance Corporation	Crystal River Unit 3 8th Period (35th Year) Tendon Surveillance SQ 12.2 Grease Void Volumes	DOCUMENT NO:	CR-N1002-020
		DOCUMENT TYPE:	ENG
		REVISION #	0
		SAFETY RELATED	
		NON-SAFETY RELATED	
		PAGE	42 OF 43

PREPARED BY: BAG DATE: 07/10/07 REVIEWED BY: CEC DATE: 08/02/07

PLANT:	CRYSTAL RIVER	UNIT:	N/A	SURVEILLANCE NUMBER:	8TH	YEAR:	35TH

TENDON GENERAL INFORMATION:

IDENTIFICATION #:	D337		GROUP:	DOME
# OF WIRES, N_s =	163		TAG LENGTH, L_{tl} (ft) =	124.5417
7mm WIRE AREA (in^2) =	0.05965		TOTAL WIRE AREA, A_s (in^2) =	9.72295

TENDON END SPECIFIC INPUT:	SHOP	FIELD
GREASE CAN LENGTH, L_{gc} (in) =	15.25	15.25
GREASE CAN INSIDE DIAMETER, D_{gc} (in) =	14.125	14.125
INITIAL TENDON SLACK, L_{ts} (in) =	3.625	
SHIM STACK HEIGHT, H_{ss} (in) =	6.25	6
POST TENSIONING SYSTEM SPECIFIC INPUT:	**SHOP**	**FIELD**
TRUMPLATE LENGTH, L_{tp} (in) =	69	27
TRUMPLATE INSIDE DIAMETER, D_{tp} (in) =	11	11
TRANSITION LENGTH, L_{tr} (in) =	2.25	2.25
TRANSITION/SHEATHING DIAMETER, D_{tr} (in) =	5	5
ANCHORHEAD THICKNESS, T_{ah} (in) =	6	
ANCHORHEAD DIAMETER, D_{ah} (in) =	10.5	
SHIM INSIDE DIAMETER, D_{si} (in) =	7	7
SHIM OUTSIDE DIAMETER, D_{so} (in) =	13.5	13.5

OUTPUT INFORMATION

DESCRIPTION	CALCULATION EQUATION	VOLUME (GALLONS)
GREASE CAN VOLUME, V_{gc} =	$\{(PI/4)*[(D_{gc,s})^2*(L_{gc,s})+(D_{gc,f})^2*(L_{gc,f})]\}/231$	20.69
TRUMPLATE VOLUME, V_{tp} =	$[((PI/4)*(D_{tp,s})^2*(L_{tp,s})-(L_{tp,s})*A_s)+((PI/4)*(D_{tp,f})^2*(L_{tp,f}))-(L_{tp,f})*A_s)]/231$	35.45
TRANSITION VOLUME, V_{tr} =	$(1/231)*\{1/3*L_{tr,s}\{(PI/4)[(D_{tp,s})^2+(D_{tr,s})^2]+[(PI/4)^2(D_{tp,s})^2(D_{tr,s})^2]^{1/2}\}+1/3*L_{tr,f}\{(PI/4)[(D_{tp,f})^2+(D_{tr,f})^2]+[(PI/4)^2(D_{tp,f})^2(D_{tr,f})^2]^{1/2}\}-\{(L_{tr,s}+L_{tr,f})*A_s\}\}$	0.84
SHEATHING VOLUME, V_{sh} =	$\{[(PI/4)*(D_{tr})^2-A_s]*[(12*L_{tl})-(L_{tp,s}+L_{tp,f}+L_{tr,s}+L_{tr,f}+L_{ts})]\}/231$	59.66
A-HEAD VOLUME, V_{ah} =	$\{(PI/4)*((D_{ah})^2*(T_{ah}))*2\}/231$	4.50
SHIM VOLUME, V_{sh} =	$\{[(PI/4)*\{(Dso)^2-(D_{si})^2\}+A_s]*(H_{ss,s}+H_{ss,f})\}/231$	6.07
NET DUCT VOLUME, V_T =	$V_{gc}+V_{tp}+V_{sh}+V_{tr}-(V_{ah}+V_{sh})$	**106.08**

PSC Precision Surveillance Corporation	Crystal River Unit 3 8th Period (35th Year) Tendon Surveillance SQ 12.2 Grease Void Volumes	DOCUMENT NO:	CR-N1002-020
		DOCUMENT TYPE:	ENG
		REVISION #	0
		SAFETY RELATED	
		NON-SAFETY RELATED	
		PAGE	43 OF 43
	PREPARED BY: BAG DATE: 07/10/07	REVIEWED BY: CEC	DATE: 08/02/07

PLANT:	CRYSTAL RIVER	UNIT:	N/A	SURVEILLANCE NUMBER:	8TH	YEAR:	35TH

TENDON GENERAL INFORMATION:

IDENTIFICATION #:	D338	GROUP:	DOME
# OF WIRES, N_s =	162	TAG LENGTH, L_{tl} (ft) =	120.2083
7mm WIRE AREA (in^2) =	0.05965	TOTAL WIRE AREA, A_s (in^2) =	9.6633

TENDON END SPECIFIC INPUT:	SHOP	FIELD
GREASE CAN LENGTH, L_{gc} (in) =	15.25	15.25
GREASE CAN INSIDE DIAMETER, D_{gc} (in) =	14.125	14.125
INITIAL TENDON SLACK, L_{ts} (in) =	4.75	
SHIM STACK HEIGHT, H_{ss} (in) =	6.75	6
POST TENSIONING SYSTEM SPECIFIC INPUT:	**SHOP**	**FIELD**
TRUMPLATE LENGTH, L_{tp} (in) =	69	27
TRUMPLATE INSIDE DIAMETER, D_{tp} (in) =	11	11
TRANSITION LENGTH, L_{tr} (in) =	2.25	2.25
TRANSITION/SHEATHING DIAMETER, D_{tr} (in) =	5	5
ANCHORHEAD THICKNESS, T_{ah} (in) =	6	
ANCHORHEAD DIAMETER, D_{ah} (in) =	10.5	
SHIM INSIDE DIAMETER, D_{si} (in) =	7	7
SHIM OUTSIDE DIAMETER, D_{so} (in) =	13.5	13.5

OUTPUT INFORMATION

DESCRIPTION	CALCULATION EQUATION	VOLUME (GALLONS)
GREASE CAN VOLUME, V_{gc} =	$\{(PI/4)*[(D_{gc,s})^2*(L_{gc,s})+(D_{gc,f})^2*(L_{gc,f})]\}/231$	20.69
TRUMPLATE VOLUME, V_{tp} =	$[((PI/4)*(D_{tp,s})^2*(L_{tp,s})-(L_{tp,s})*A_s)+((PI/4)*(D_{tp,f})^2*(L_{tp,f}))-(L_{tp,f})*A_s)]/231$	35.48
TRANSITION VOLUME, V_{tr} =	$(1/231)*\{1/3*L_{tr,s}\{(PI/4)[(D_{tp,s})^2+(D_{tr,s})^2]+[(PI/4)^2(D_{tp,s})^2(D_{tr,s})^2]^{1/2}\}+1/3*L_{tr,f}\{(PI/4)[(D_{tp,f})^2+(D_{tr,f})^2]+[(PI/4)^2(D_{tp,f})^2(D_{tr,f})^2]^{1/2}\}-\{(L_{tr,s}+L_{tr,f})*A_s\}\}$	0.84
SHEATHING VOLUME, V_{sh} =	$\{[(PI/4)*(D_{tr})^2-A_s]*[(12*L_{tl})-(L_{tp,s}+L_{tp,f}+L_{tr,s}+L_{tr,f}+L_{ts})]\}/231$	57.73
A-HEAD VOLUME, V_{ah} =	$\{(PI/4)*((D_{ah})^2*(T_{ah}))*2\}/231$	4.50
SHIM VOLUME, V_{sh} =	$\{[(PI/4)*\{(Dso)^2-(D_{si})^2\}+A_s]*(H_{ss,s}+H_{ss,f})\}/231$	6.31
NET DUCT VOLUME, V_T =	$V_{gc}+V_{tp}+V_{ah}+V_{tr}-(V_{ah}+V_{sh})$	**103.92**

ATTACHMENT F – CR-N1002-100, "USF SET POSITION DESIGN"

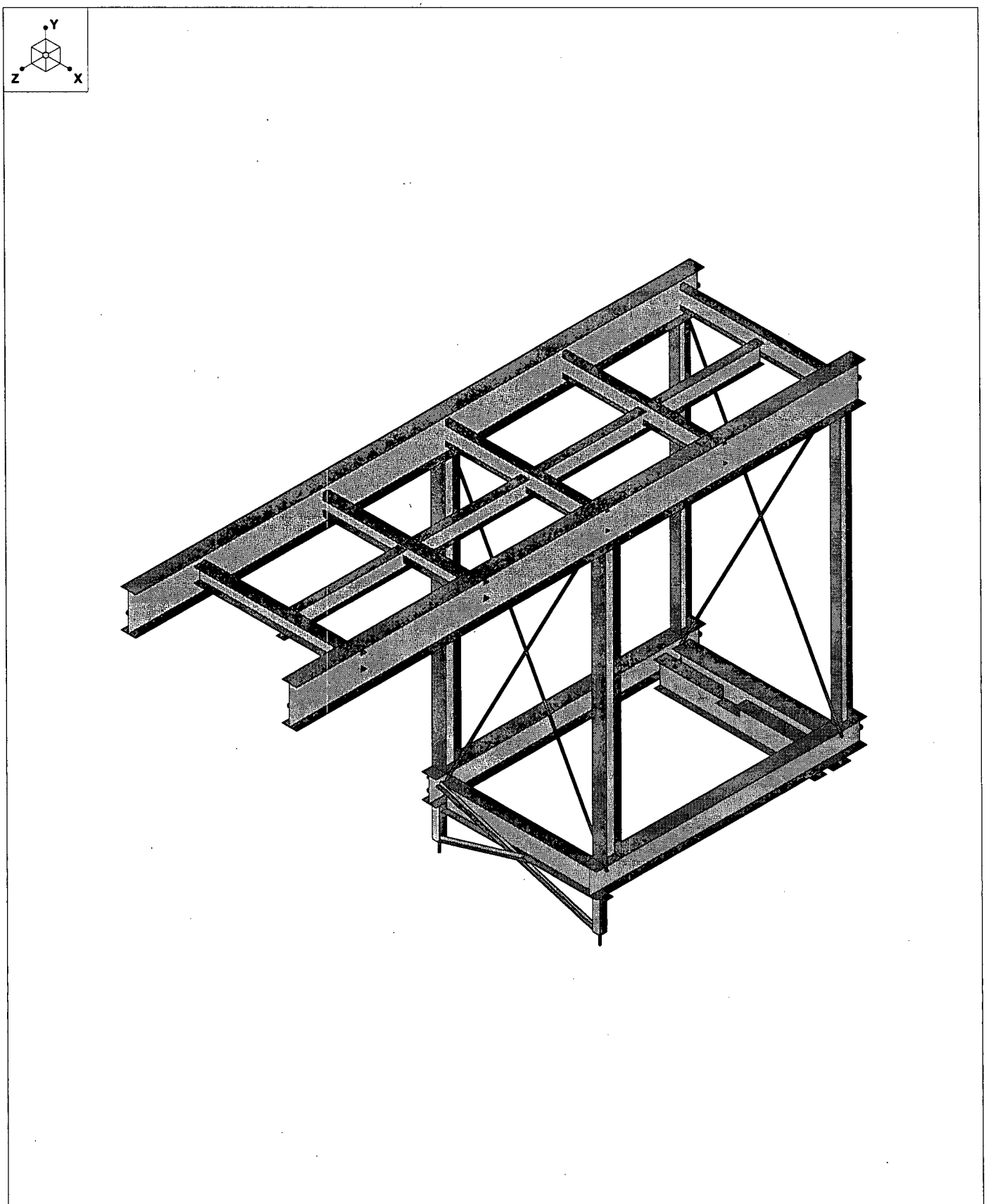

Precision Surveillance Co...	Crystal River USF Set Position Design	
Brian Giometti		Aug 6, 2007 at 12:28 PM
CR-N1002-100		CR-N1002-100_USF Design Set.R...

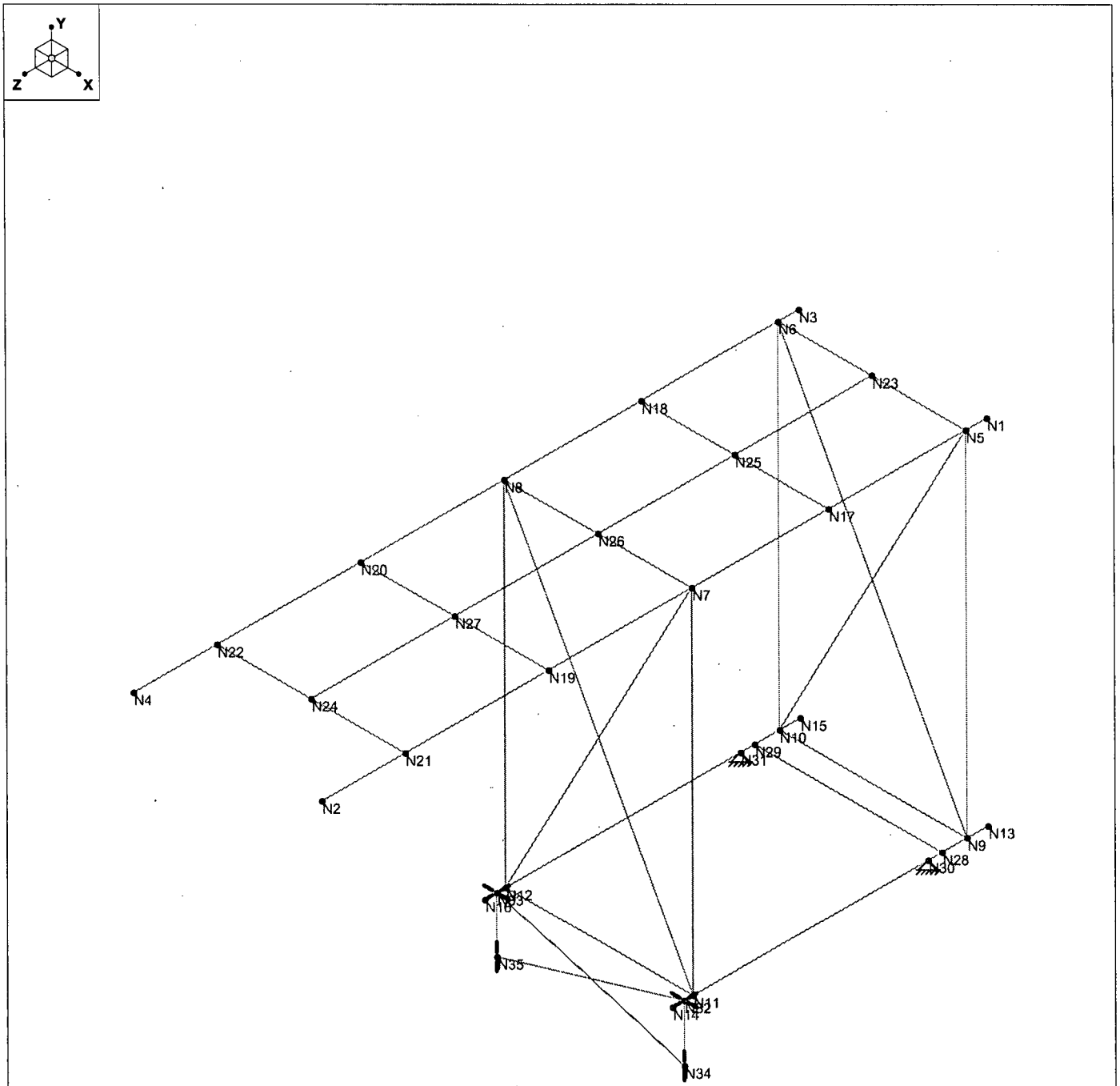

Precision Surveillance Co...	Crystal River USF Set Position Design	
Brian Giometti		Aug 6, 2007 at 12:30 PM
CR-N1002-100		CR-N1002-100 USF Design Set.R...

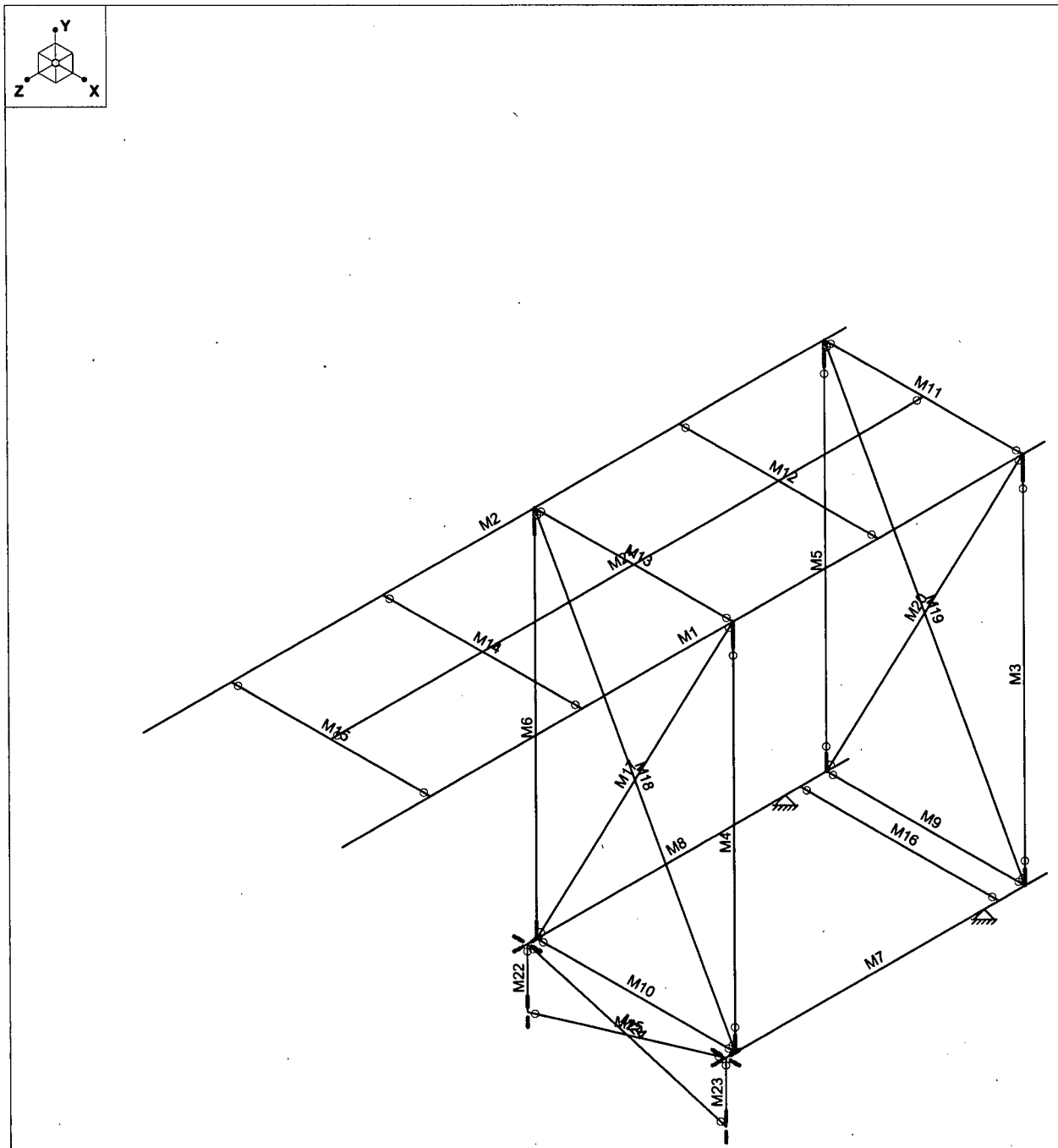

Precision Surveillance Co...	Crystal River USF Set Position Design	
Brian Giometti		Aug 6, 2007 at 12:31 PM
CR-N1002-100		CR-N1002-100 USF Design Set.R...

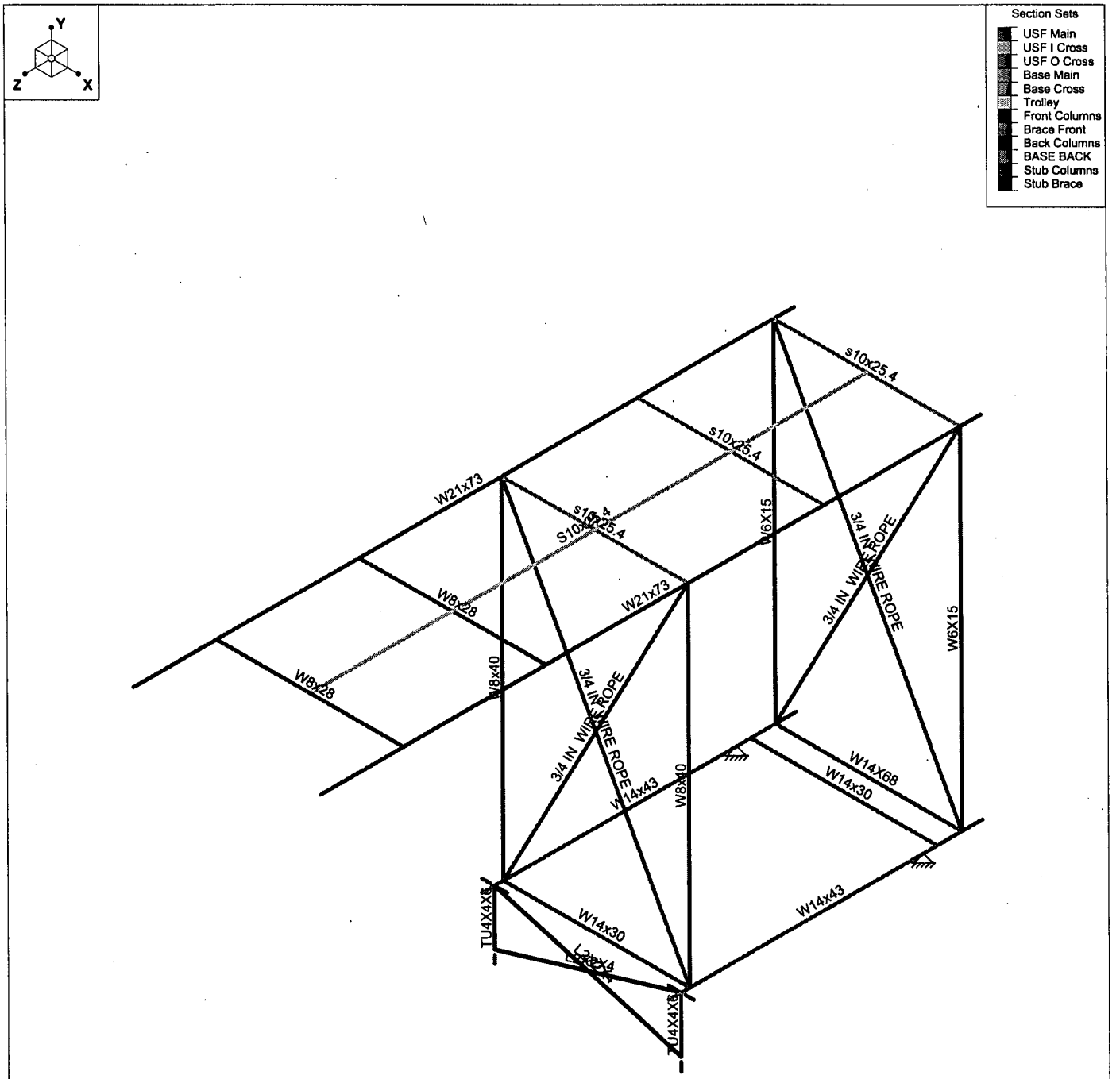

Precision Surveillance Co...	Crystal River USF Set Position Design	
Brian Giometti		Aug 6, 2007 at 12:32 PM
CR-N1002-100		CR-N1002-100 USF Design Set.R...

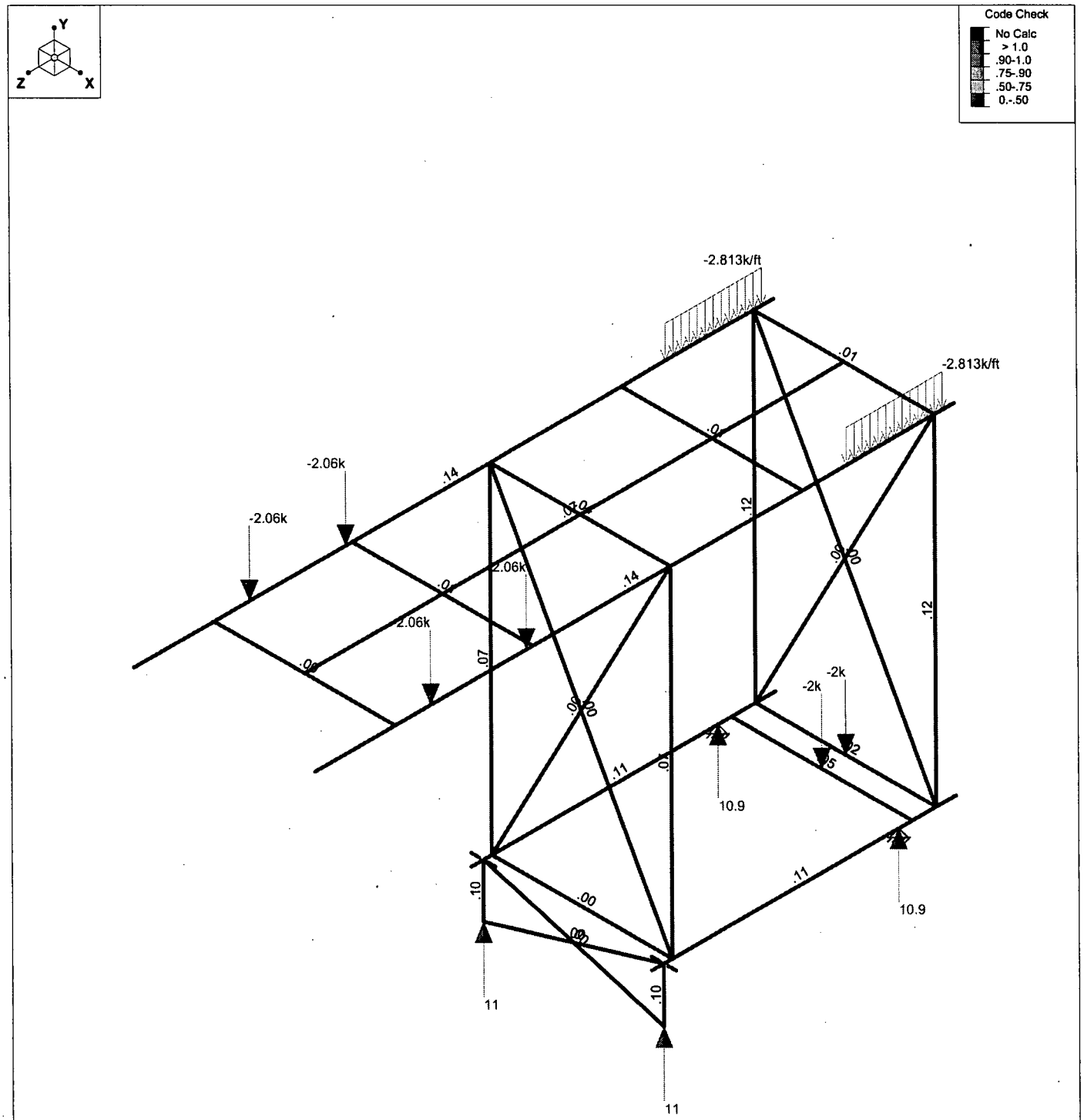

Member Code Checks Displayed
Loads: LC 2, DL
Results for LC 2, DL
Reaction units are k and k-ft

Precision Surveillance Co...	Crystal River USF Set Position Design	
Brian Giometti		Aug 6, 2007 at 12:33 PM
CR-N1002-100		CR-N1002-100 USF Design Set.R...

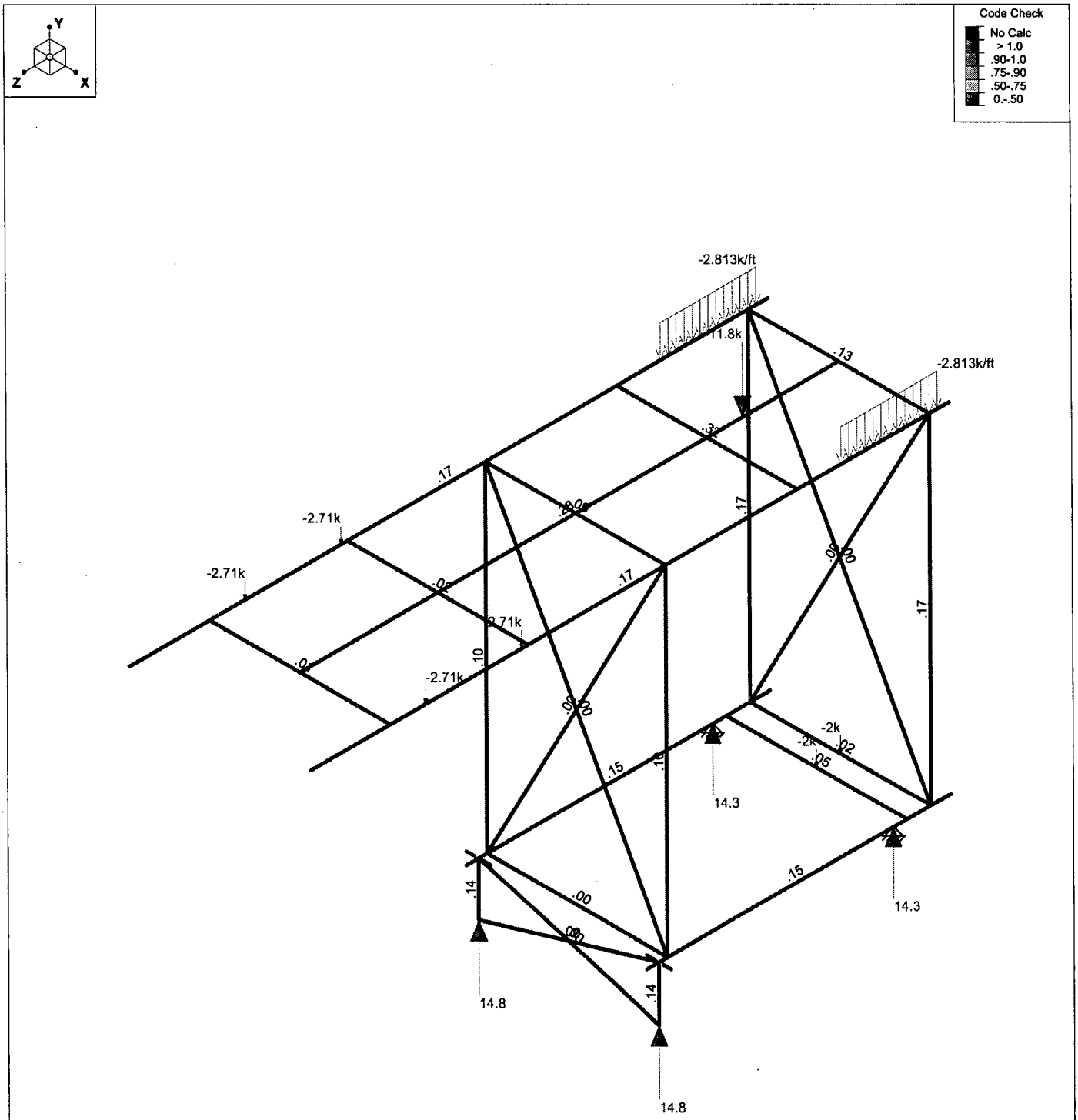

Member Code Checks Displayed
Loads: LC 3, DL+LL+Hoist In
Results for LC 3, DL+LL+Hoist In
Reaction units are k and k-ft

Precision Surveillance Co...	Crystal River USF Set Position Design	
Brian Giometti		Aug 6, 2007 at 12:38 PM
CR-N1002-100		CR-N1002-100 USF Design Set.R...

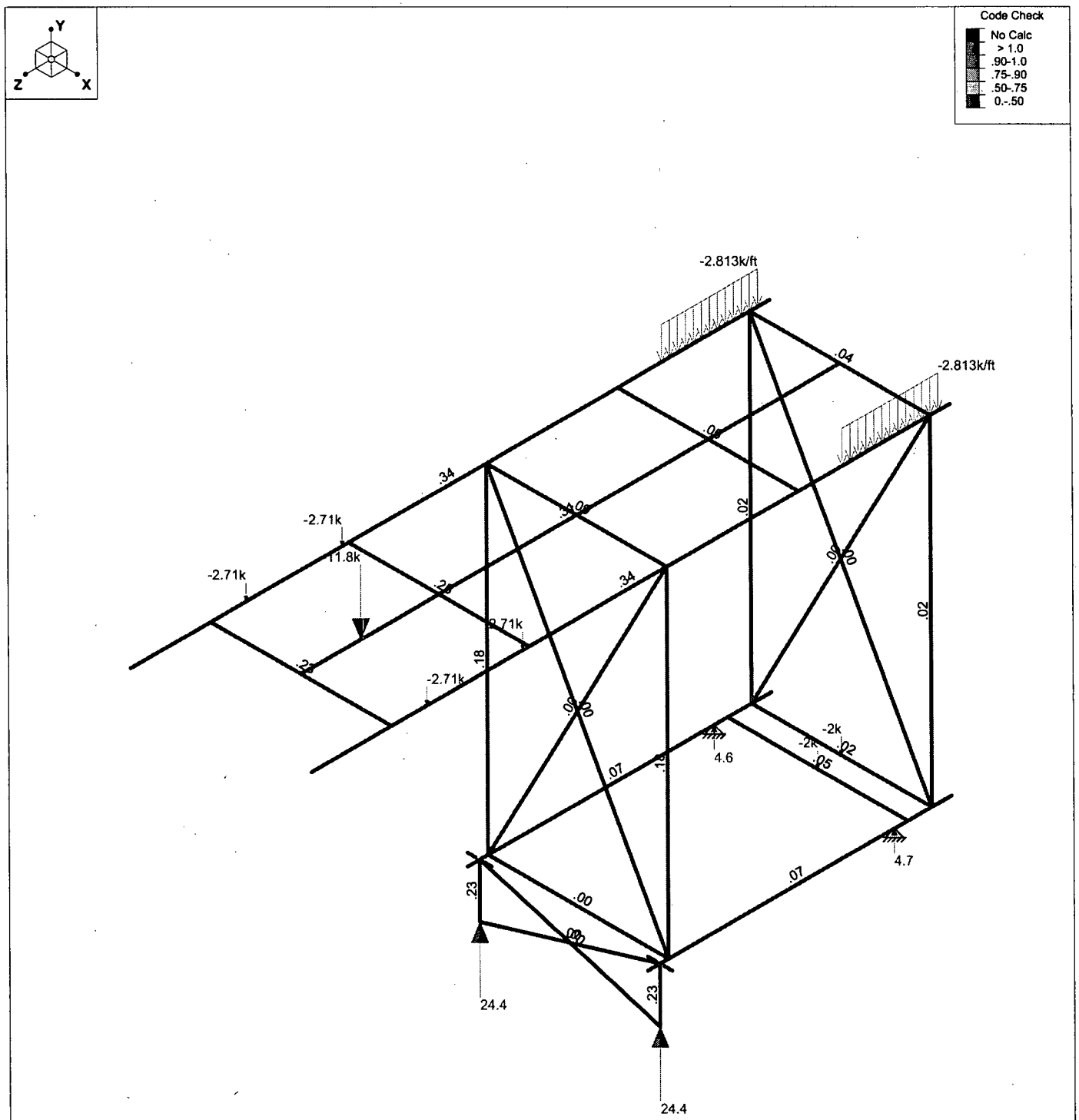

Member Code Checks Displayed
Loads: LC 4, DL+LL+Hoist Out
Results for LC 4, DL+LL+Hoist Out
Reaction units are k and k-ft

Precision Surveillance Co...	Crystal River USF Set Position Design	
Brian Giometti		Aug 6, 2007 at 12:38 PM
CR-N1002-100		CR-N1002-100 USF Design Set.R...

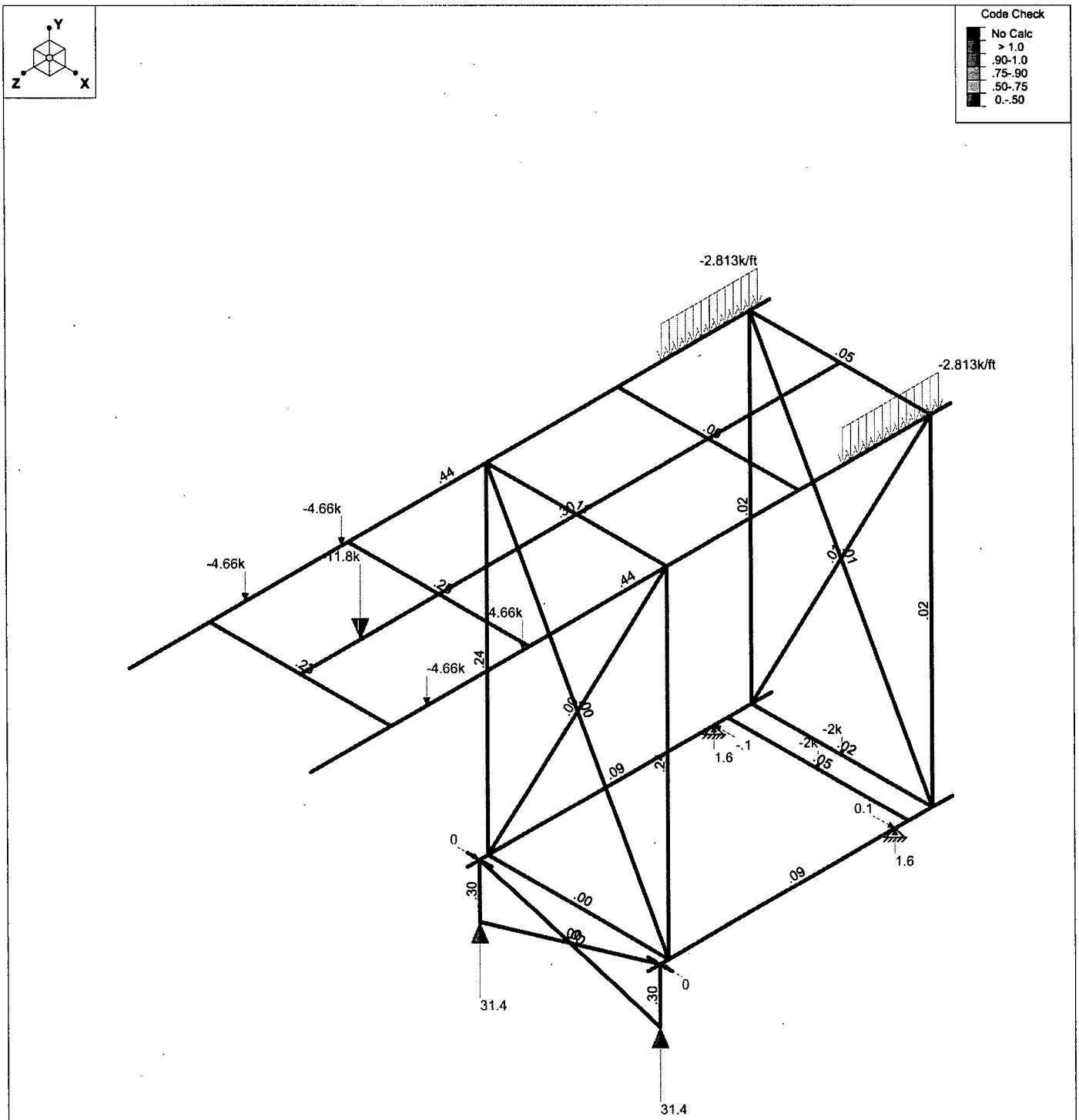

Member Code Checks Displayed
Loads: LC 5, 4:1 Equivalent
Results for LC 5, 4:1 Equivalent
Reaction units are k and k-ft

Precision Surveillance Co...	Crystal River USF Set Position Design	
Brian Giometti		Aug 6, 2007 at 12:39 PM
CR-N1002-100		CR-N1002-100 USE Design Set.R...

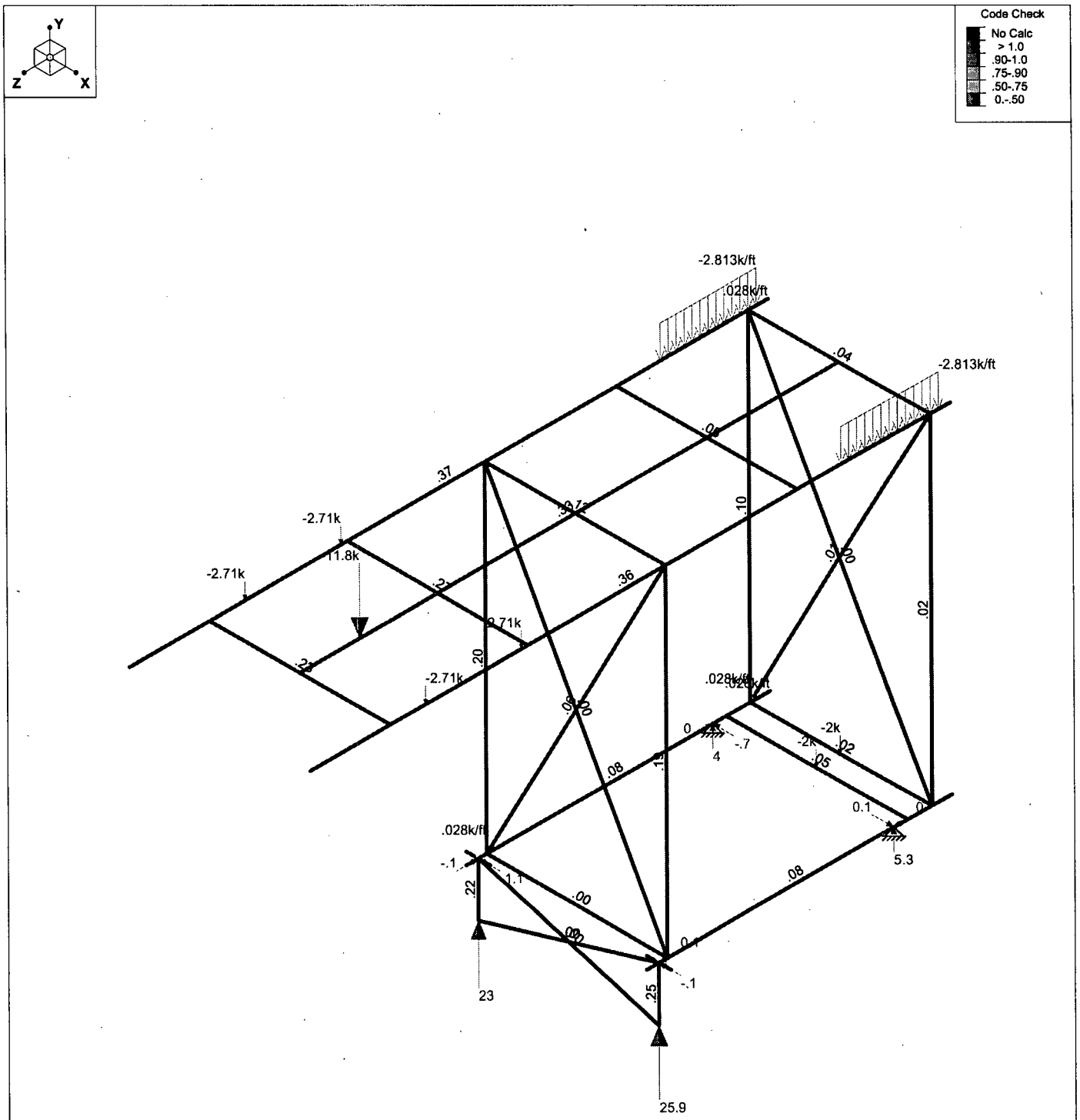

Member Code Checks Displayed
Loads: LC 6, DL+LL+WLX30
Results for LC 6, DL+LL+WLX30
Reaction units are k and k-ft

Precision Surveillance Co...	Crystal River USF Set Position Design	
Brian Giometti		Aug 6, 2007 at 12:39 PM
CR-N1002-100		CR-N1002-100 USF Design Set.R...

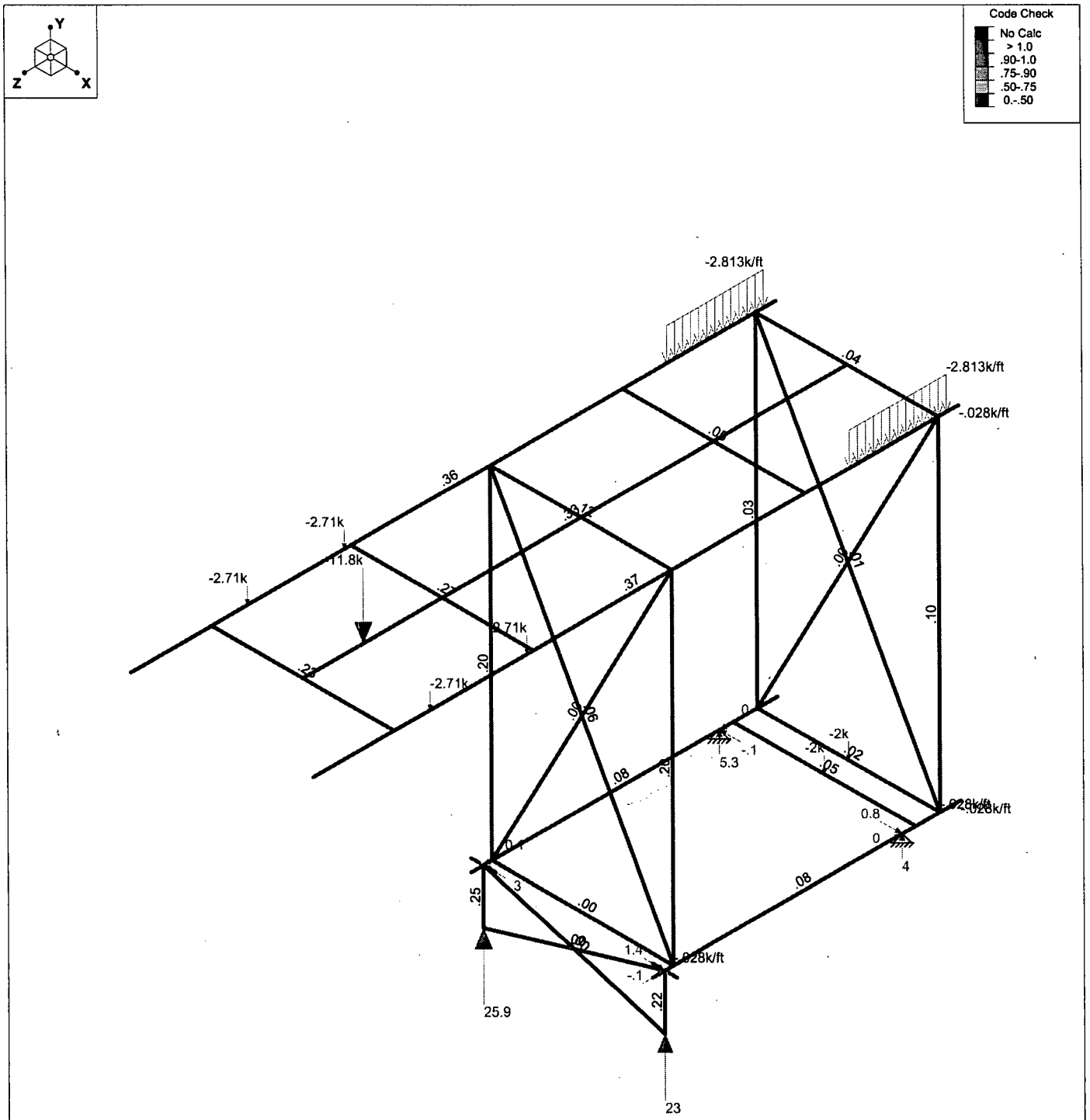

Member Code Checks Displayed
Loads: LC 7, DL+LL-WLX30
Results for LC 7, DL+LL-WLX30
Reaction units are k and k-ft

Precision Surveillance Co...	Crystal River USF Set Position Design	
Brian Giometti		Aug 6, 2007 at 12:42 PM
CR-N1002-100		CR-N1002-100 USF Design Set.R...

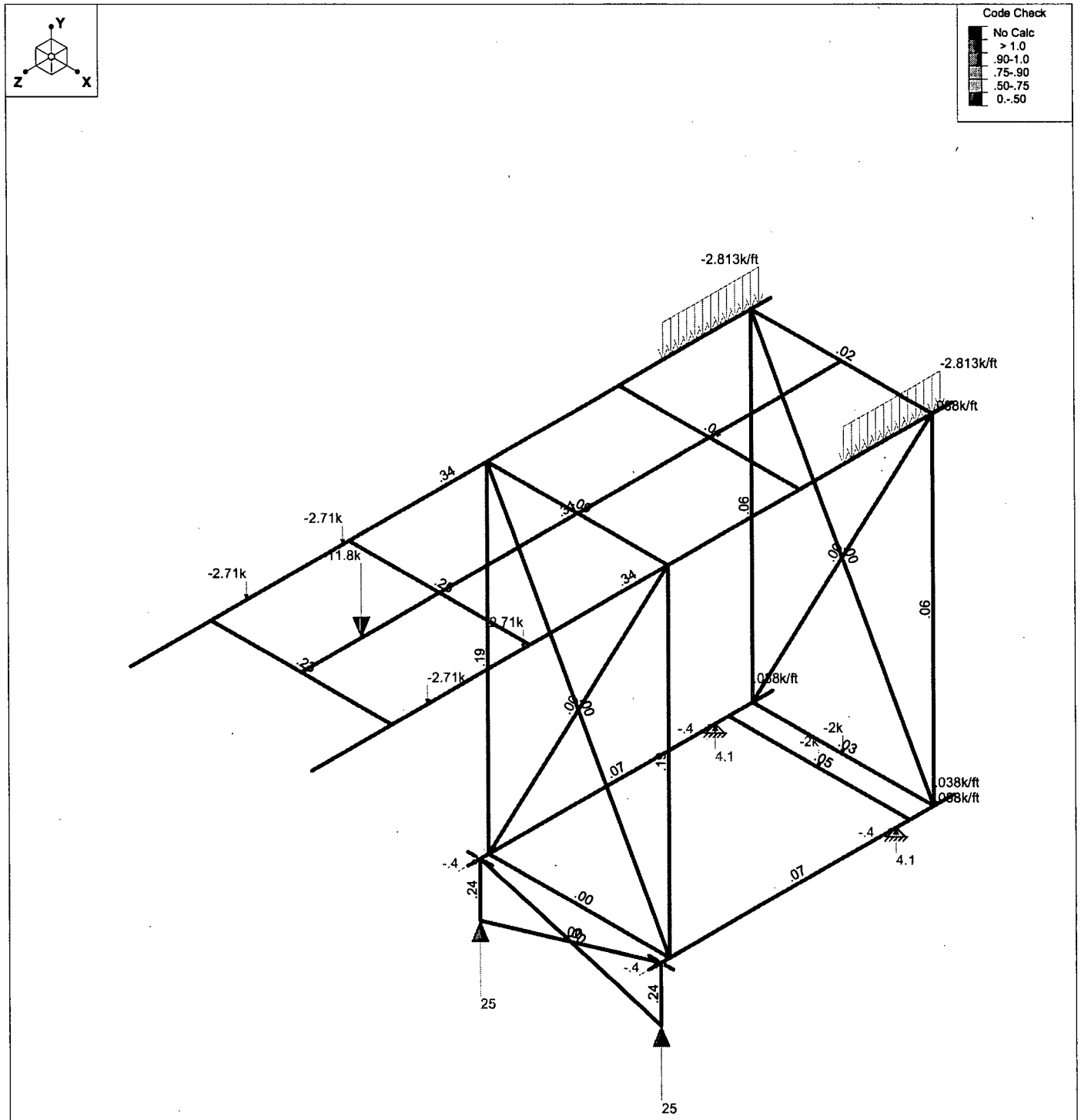

Member Code Checks Displayed
Loads: LC 8, DL+LL+WLZ30
Results for LC 8, DL+LL+WLZ30
Reaction units are k and k-ft

Precision Surveillance Co...	Crystal River USF Set Position Design	
Brian Giometti		Aug 6, 2007 at 12:42 PM
CR-N1002-100		CR-N1002-100_USF Design Set.R...

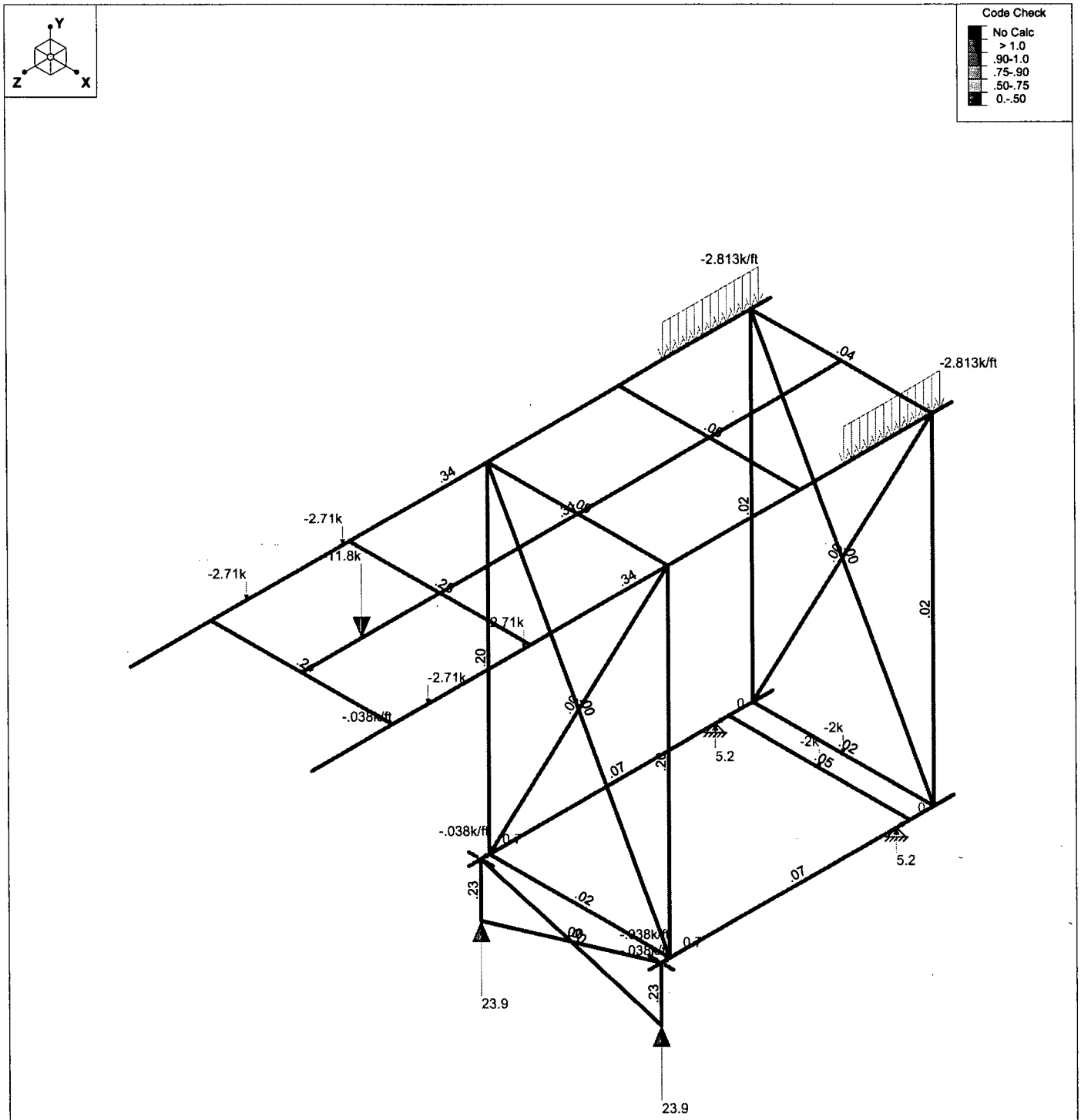

Member Code Checks Displayed
Loads: LC 9, DL+LL-WLZ30
Results for LC 9, DL+LL-WLZ30
Reaction units are k and k-ft

Precision Surveillance Co...	Crystal River USF Set Position Design	
Brian Giometti		Aug 6, 2007 at 12:43 PM
CR-N1002-100		CR-N1002-100_USF Design Set.R...

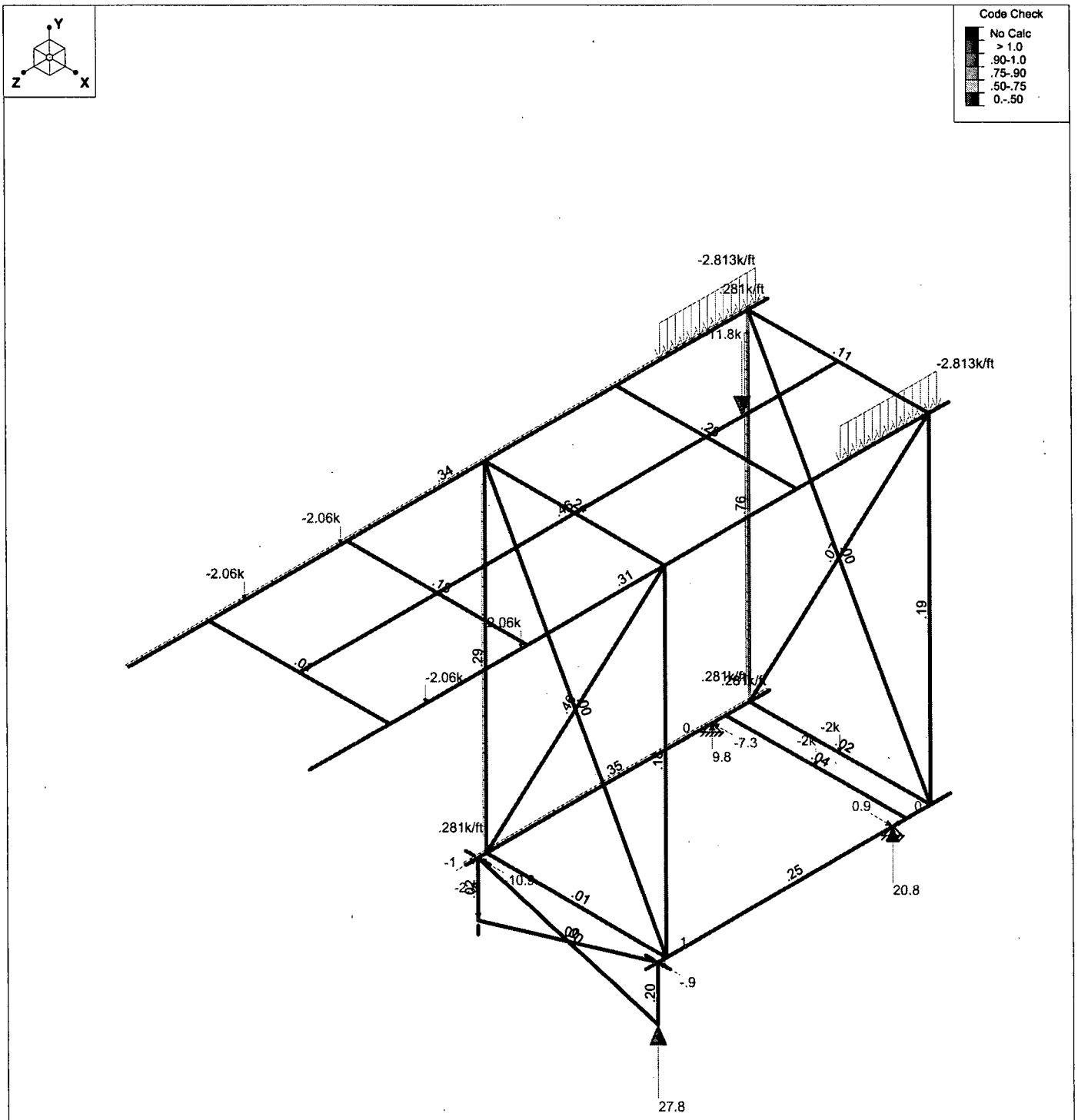

Member Code Checks Displayed
Loads: LC 10, DL+LL+WLX150
Results for LC 10, DL+LL+WLX150
Reaction units are k and k-ft

Precision Surveillance Co...	Crystal River USF Set Position Design	
Brian Giometti		Aug 6, 2007 at 12:43 PM
CR-N1002-100		CR-N1002-100 USF Design Set:R...

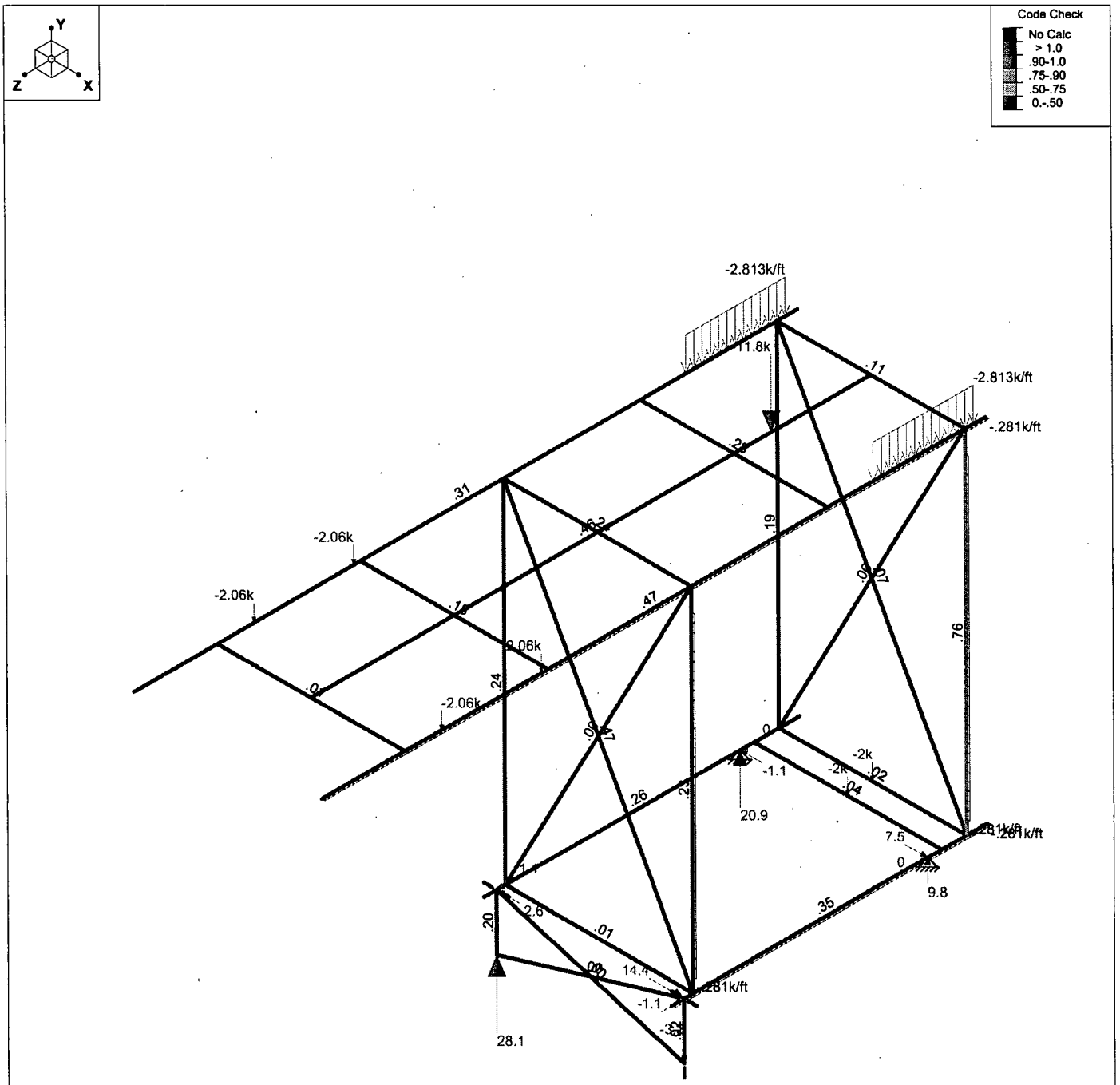

Member Code Checks Displayed
Loads: LC 11, DL+LL-WLX150
Results for LC 11, DL+LL-WLX150
Reaction units are k and k-ft

Precision Surveillance Co...	Crystal River USF Set Position Design	
Brian Giometti		Aug 6, 2007 at 12:44 PM
CR-N1002-100		CR-N1002-100 USF Design Set.R...

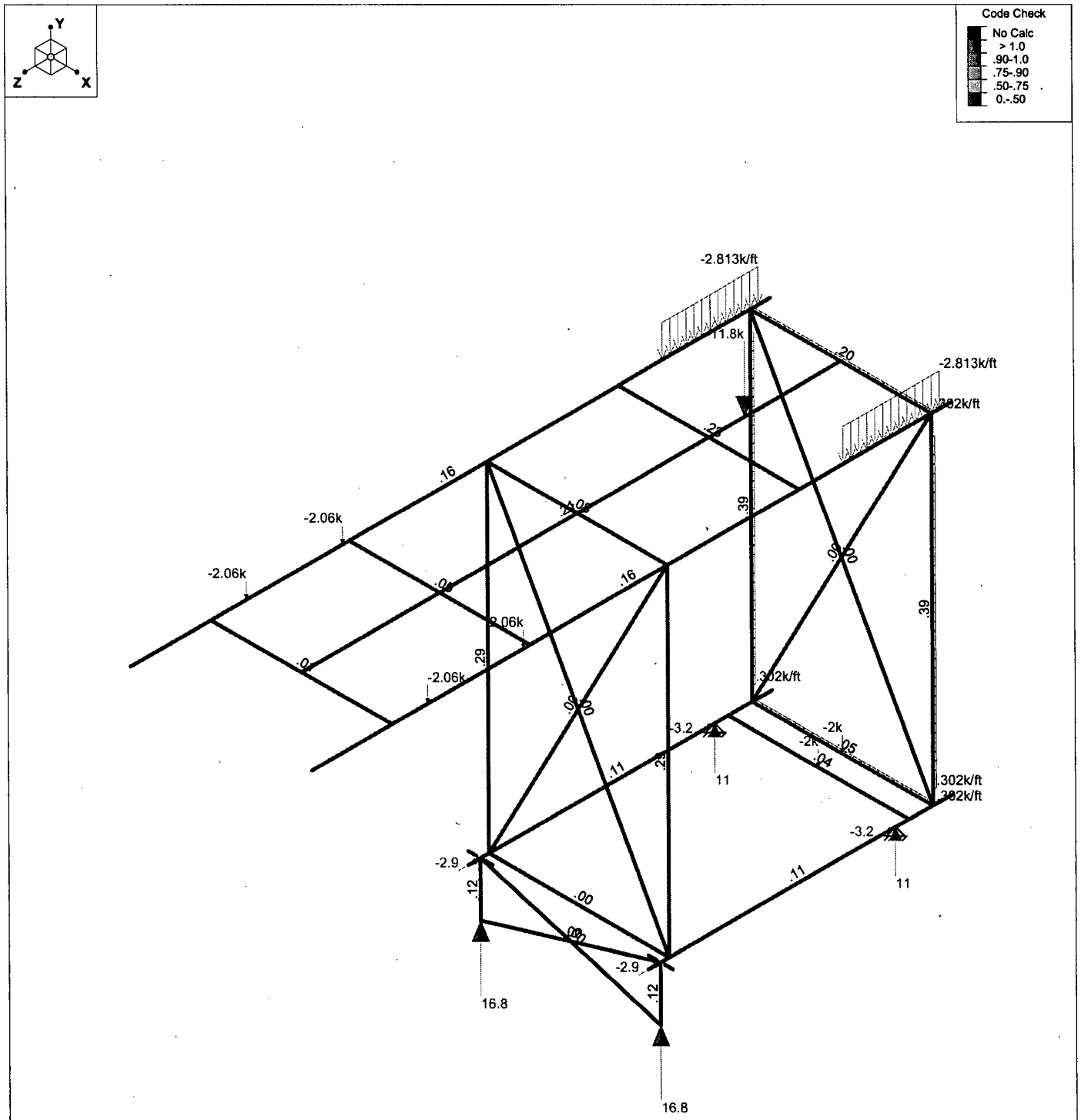

Member Code Checks Displayed
Loads: LC 12, DL+LL+WLZ150
Results for LC 12, DL+LL+WLZ150
Reaction units are k and k-ft

Precision Surveillance Co...	Crystal River USF Set Position Design	
Brian Giometti		Aug 6, 2007 at 12:44 PM
CR-N1002-100		CR-N1002-100 USF Design Set.R...

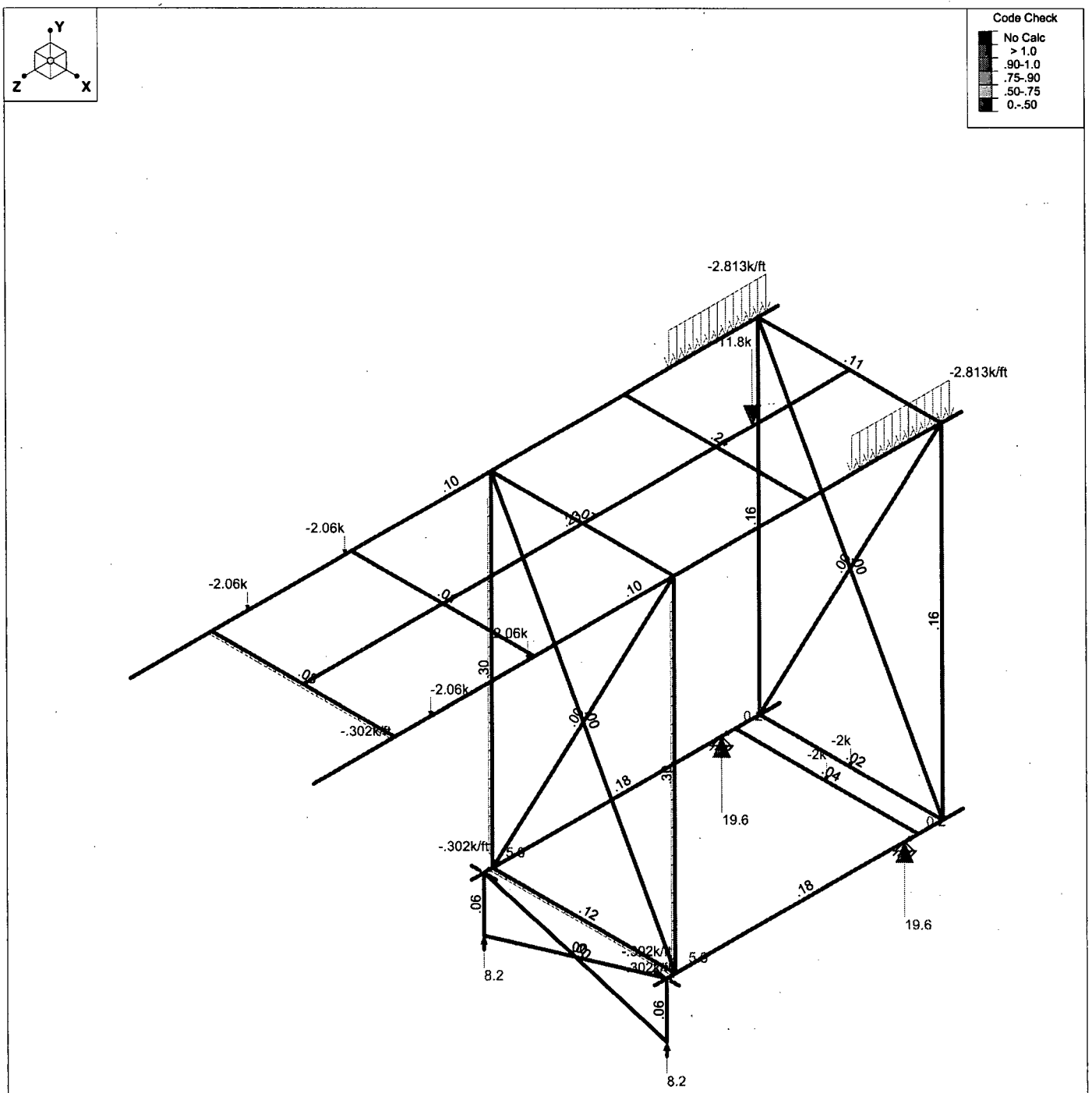

Member Code Checks Displayed
Loads: LC 13, DL+LL-WLZ150
Results for LC 13, DL+LL-WLZ150
Reaction units are k and k-ft

Precision Surveillance Co...	Crystal River USF Set Position Design	
Brian Giometti		Aug 6, 2007 at 12:45 PM
CR-N1002-100		CR-N1002-100 USF Design Set.R...

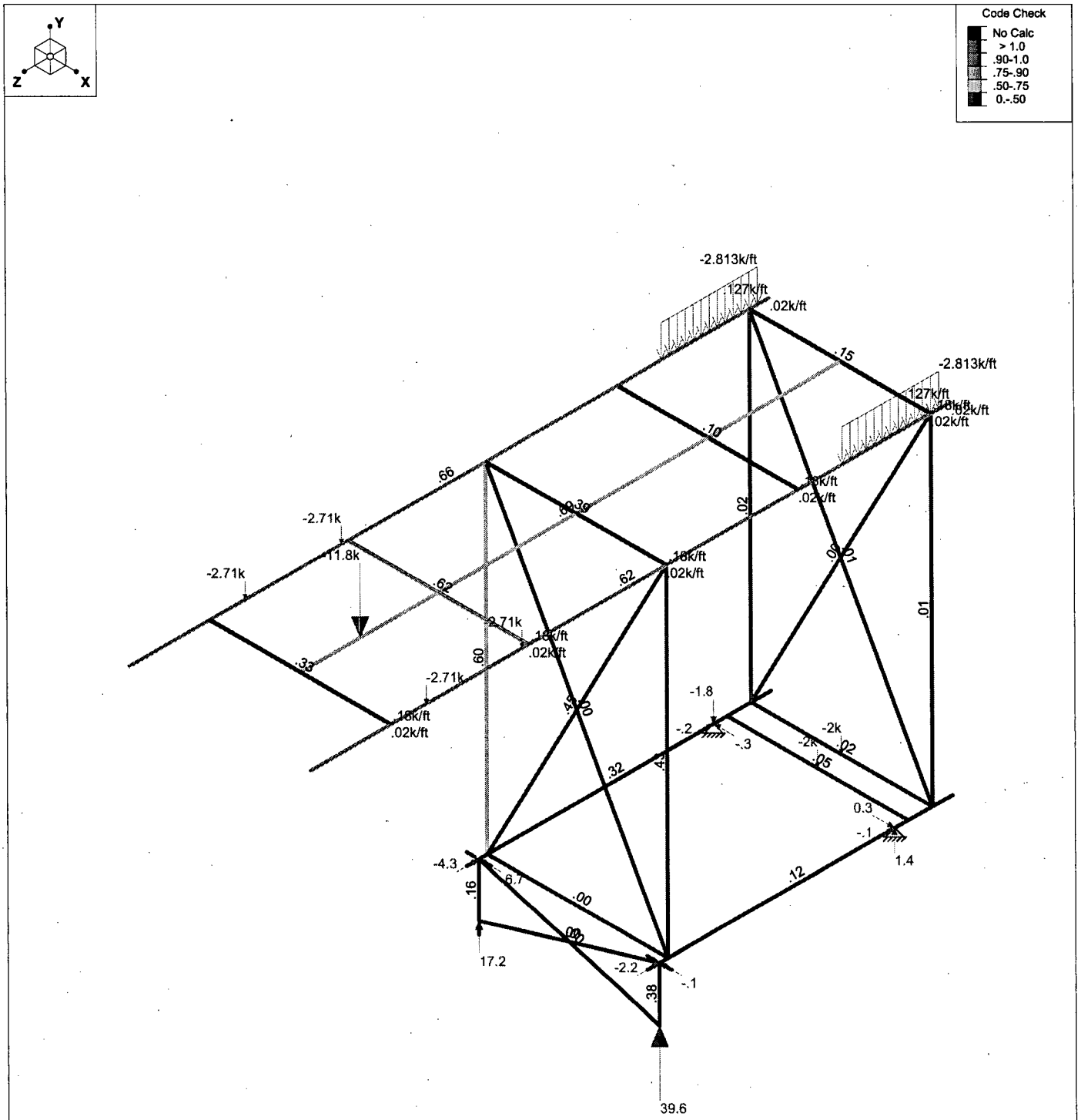

Member Code Checks Displayed
Loads: LC 14, DL+LL+DBE(X)+DBE(Y)+DBE(Z)
Results for LC 14, DL+LL+DBE(X)+DBE(Y)+DBE(Z)
Reaction units are k and k-ft

Precision Surveillance Co...	Crystal River USF Set Position Design	
Brian Giometti		Aug 6, 2007 at 12:45 PM
CR-N1002-100		CR-N1002-100 USF Design Set.R...

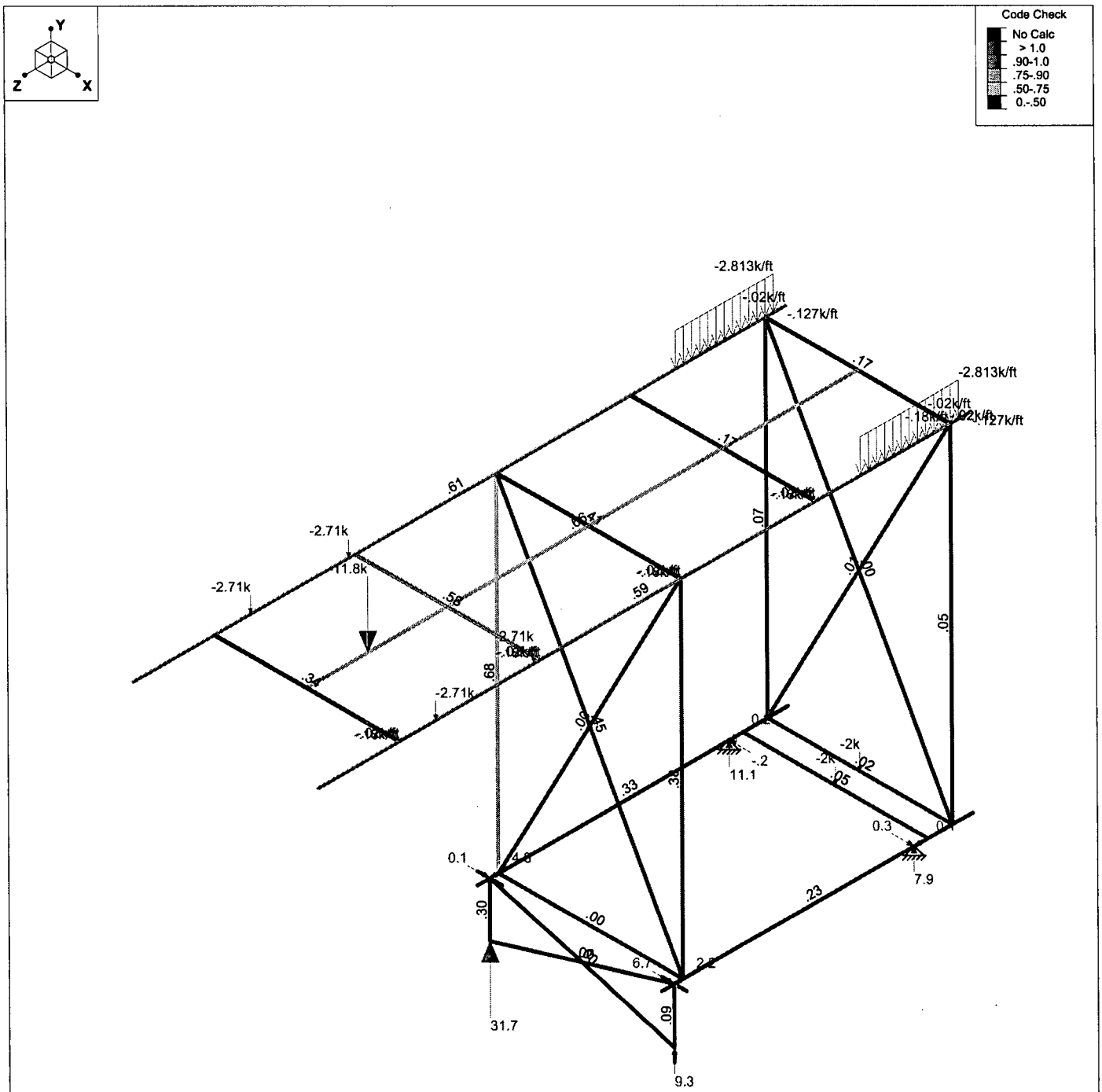

Member Code Checks Displayed
Loads: LC 15, DL+LL-DBE(X)-DBE(Y)-DBE(Z)
Results for LC 15, DL+LL-DBE(X)-DBE(Y)-DBE(Z)
Reaction units are k and k-ft

Precision Surveillance Co...	Crystal River USF Set Position Design	
Brian Giometti		Aug 6, 2007 at 12:45 PM
CR-N1002-100		CR-N1002-100 USF Design Set.R...

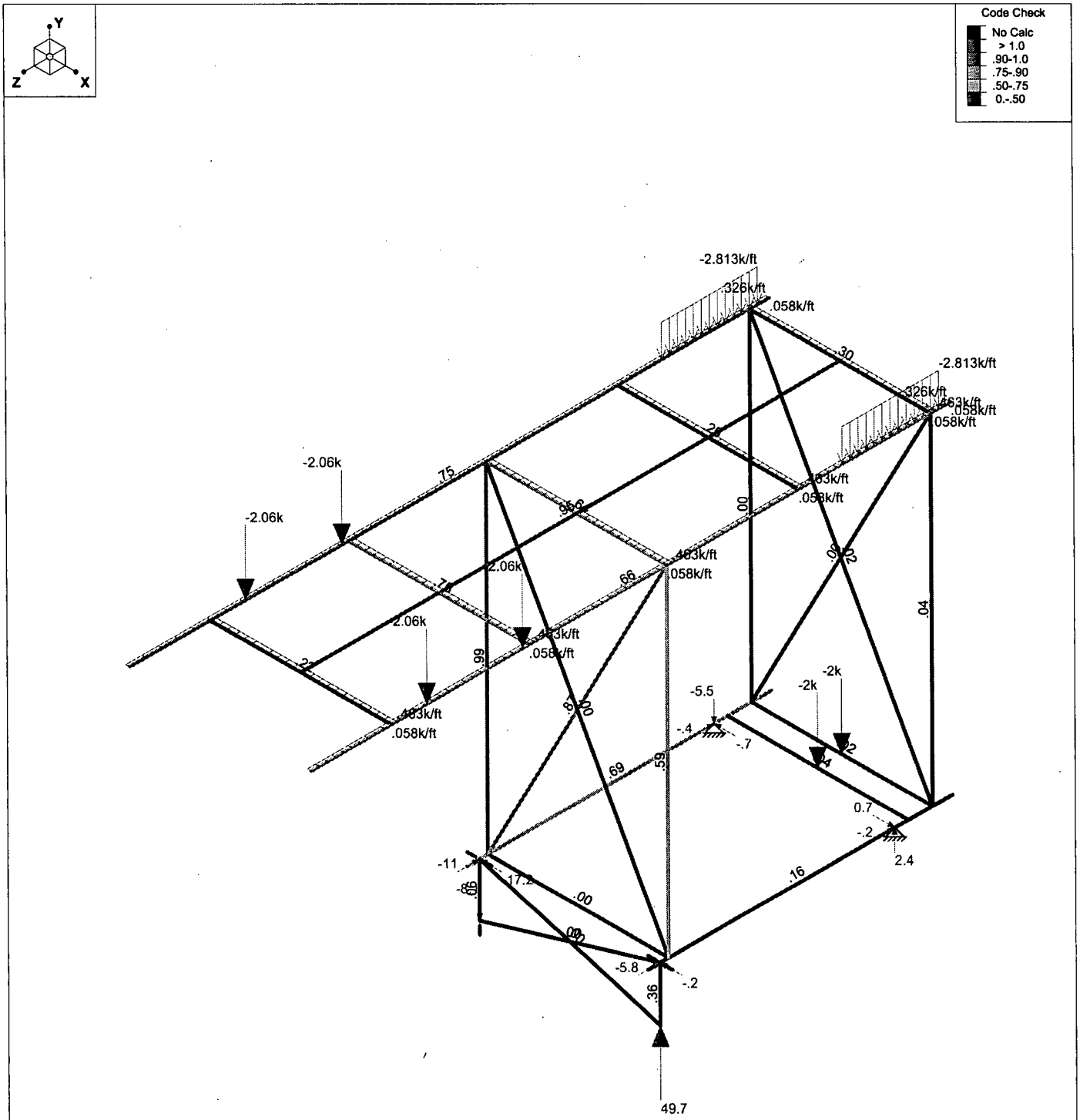

Member Code Checks Displayed
Loads: LC 16, DL+LL+MHE(X)+MHE(Y)+MHE(Z)
Results for LC 16, DL+LL+MHE(X)+MHE(Y)+MHE(Z)
Reaction units are k and k-ft

Precision Surveillance Co...	Crystal River USF Set Position Design	
Brian Giometti		Aug 6, 2007 at 12:50 PM
CR-N1002-100		CR-N1002-100 USF Design Set.R...

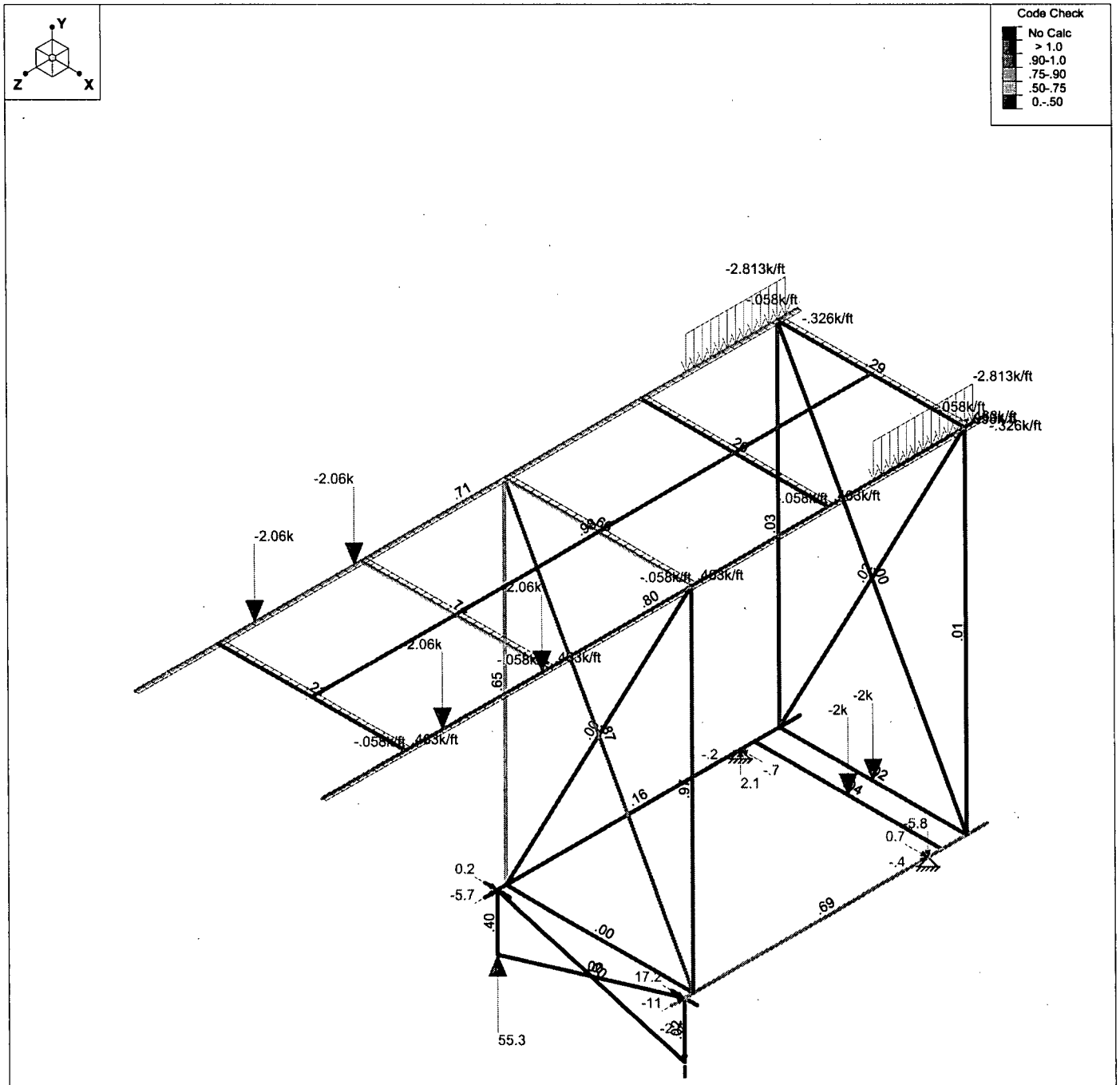

Member Code Checks Displayed
Loads: LC 17, DL+LL-MHE(X)-MHE(Y)-MHE(Z)
Results for LC 17, DL+LL-MHE(X)-MHE(Y)-MHE(Z)
Reaction units are k and k-ft

Precision Surveillance Co...	Crystal River USF Set Position Design	
Brian Giometti		Aug 6, 2007 at 12:51 PM
CR-N1002-100		CR-N1002-100 USF Design Set.R...

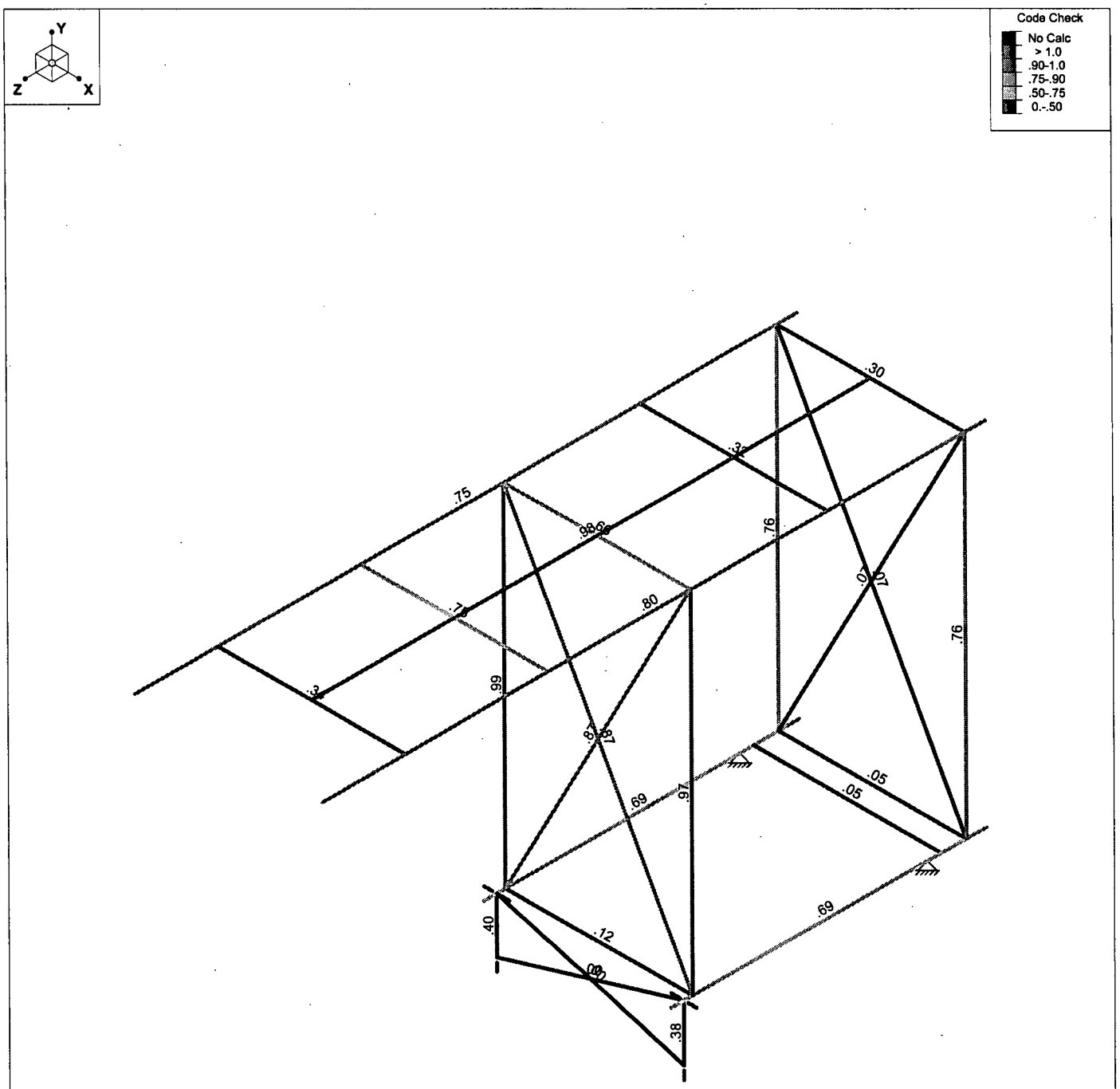

Member Code Checks Displayed
Solution: Envelope
Reaction units are k and k-ft

Precision Surveillance Co...	Crystal River USF Set Position Design	
Brian Giometti		Aug 6, 2007 at 12:52 PM
CR-N1002-100		CR-N1002-100_USF Design Set.R...

Global

Display Sections for Member Calcs	5
Max Internal Sections for Member Calcs	97
Include Shear Deformation	Yes
Include Warping	Yes
Area Load Mesh (in^2)	144
Merge Tolerance (in)	.12
P-Delta Analysis Tolerance	0.50%
Vertical Axis	Y

Hot Rolled Steel Code	AISC: ASD 9th
Cold Formed Steel Code	AISI 99: ASD
Wood Code	NDS 91/97: ASD
Wood Temperature	< 100F
Concrete Code	ACI 2002

Number of Shear Regions	4
Region Spacing Increment (in)	4
Biaxial Column Method	PCA Load Contour
Parme Beta Factor (PCA)	.65
Concrete Stress Block	Rectangular
Use Cracked Sections	Yes
Bad Framing Warnings	No
Unused Force Warnings	Yes

Hot Rolled Steel Properties

	Label	E [ksi]	G [ksi]	Nu	Therm (\1E5 F)	Density[k/ft^3]	Yield[ksi]
1	A36 Gr.36	29000	11154	.3	.65	.49	36
2	A572 Gr.50	29000	11154	.3	.65	.49	50
3	A992	29000	11154	.3	.65	.49	50
4	A500 Gr.42	29000	11154	.3	.65	.49	42
5	A500 Gr.46	29000	11154	.3	.65	.49	46
6	Cable	29000	11154	.3	.65	0	60

Material Takeoff

	Material	Size	Pieces	Length[ft]	Weight[K]
1	Hot Rolled Steel				
2	A36 Gr.36	L2X2X4	2	15.7	0
3	A36 Gr.36	s10x25.4	3	22.5	.6
4	A36 Gr.36	S10x25.4	1	22.5	.6
5	A36 Gr.36	TU4X4X6	2	4.5	0
6	A36 Gr.36	W14x30	2	15	.5
7	A36 Gr.36	W14x43	2	25.3	1.1
8	A36 Gr.36	W14X68	1	7.5	.5
9	A36 Gr.36	W21x73	2	53.3	3.9
10	A36 Gr.36	W6X15	2	25.5	.4
11	A36 Gr.36	W8x28	2	15	.4
12	A36 Gr.36	W8x40	2	25.5	1
13	Cable	3/4 IN WIRE ROPE	4	64.2	0
14	Total HR Steel		25	296.4	9

Hot Rolled Steel Section Sets

	Label	Shape	Design List	Type	Material	Design Rules	A [in2]	Iyy [in4]	Izz [in4]	J [in4]
1	USF Main	W21x73	Wide Flange	Beam	A36 Gr.36	Typical	21.5	70.6	1600	3.02
2	USF I Cross	s10x25.4	Wide Flange	Beam	A36 Gr.36	Typical	7.46	6.79	124	.6

Hot Rolled Steel Section Sets (Continued)

	Label	Shape	Design List	Type	Material	Design Rules	A [in2]	Iyy [in4]	Izz [in4]	J [in4]
3	USF O Cross	W8x28	Wide Flange	Beam	A36 Gr.36	Typical	8.25	21.7	98	.54
4	Base Main	W14x43	Wide Flange	Beam	A36 Gr.36	Typical	12.6	45.2	428	1.05
5	Base Cross	W14x30	Wide Flange	Beam	A36 Gr.36	Typical	8.85	19.6	291	.38
6	Trolley	S10x25.4	Wide Flange	Beam	A36 Gr.36	Typical	7.46	6.79	124	.6
7	Front Colum...	W8x40	Wide Flange	Column	A36 Gr.36	Typical	11.7	49.1	146	1.12
8	Brace Front	3/4 IN WIR...	Round Default	HBrace	Cable	Typical	.917	1	1	1
9	Back Columns	W6X15	Wide Flange	Column	A36 Gr.36	Typical	4.43	9.32	29.1	.1
10	BASE BACK	W14X68	Wide Flange	Beam	A36 Gr.36	Typical	20	121	723	3.02
11	Stub Columns	TU4X4X6	Tube	Column	A36 Gr.36	Typical	5.08	10.7	10.7	18.4
12	Stub Brace	L2X2X4	Single Angle	HBrace	A36 Gr.36	Typical	.938	.348	.348	.02

Member Primary Data

	Label	I Joint	J Joint	K Joint	Rotate(deg)	Section/Shape	Design List	Type	Material	Design Rules
1	M1	N1	N2			USF Main	Wide Flange	Beam	A36 Gr.36	Typical
2	M2	N3	N4			USF Main	Wide Flange	Beam	A36 Gr.36	Typical
3	M3	N9	N5		90	Back Columns	Wide Flange	Column	A36 Gr.36	Typical
4	M4	N11	N7		90	Front Columns	Wide Flange	Column	A36 Gr.36	Typical
5	M5	N10	N6		90	Back Columns	Wide Flange	Column	A36 Gr.36	Typical
6	M6	N12	N8		90	Front Columns	Wide Flange	Column	A36 Gr.36	Typical
7	M7	N13	N14			Base Main	Wide Flange	Beam	A36 Gr.36	Typical
8	M8	N15	N16			Base Main	Wide Flange	Beam	A36 Gr.36	Typical
9	M9	N9	N10			BASE BACK	Wide Flange	Beam	A36 Gr.36	Typical
10	M10	N11	N12			Base Cross	Wide Flange	Beam	A36 Gr.36	Typical
11	M11	N5	N6			USF I Cross	Wide Flange	Beam	A36 Gr.36	Typical
12	M12	N17	N18			USF I Cross	Wide Flange	Beam	A36 Gr.36	Typical
13	M13	N7	N8			USF I Cross	Wide Flange	Beam	A36 Gr.36	Typical
14	M14	N19	N20			USF O Cross	Wide Flange	Beam	A36 Gr.36	Typical
15	M15	N21	N22			USF O Cross	Wide Flange	Beam	A36 Gr.36	Typical
16	M16	N28	N29			Base Cross	Wide Flange	Beam	A36 Gr.36	Typical
17	M17	N12	N7			Brace Front	Round Default	HBrace	Cable	Typical
18	M18	N8	N11			Brace Front	Round Default	HBrace	Cable	Typical
19	M19	N6	N9			Brace Front	Round Default	HBrace	Cable	Typical
20	M20	N5	N10			Brace Front	Round Default	HBrace	Cable	Typical
21	M21	N23	N24			Trolley	Wide Flange	Beam	A36 Gr.36	Typical
22	M22	N33	N35			Stub Columns	Tube	Column	A36 Gr.36	Typical
23	M23	N32	N34			Stub Columns	Tube	Column	A36 Gr.36	Typical
24	M24	N33	N34			Stub Brace	Single Angle	HBrace	A36 Gr.36	Typical
25	M25	N35	N32			Stub Brace	Single Angle	HBrace	A36 Gr.36	Typical

Member Advanced Data

	Label	I Release	J Release	I Offset[in]	J Offset[in]	T/C Only	Physical	TOM	Inactive
1	M1						Yes		
2	M2						Yes		
3	M3	BenPIN	BenPIN	M7	M1		Yes		
4	M4	OOOOXO	OOOOXO	M7	M1		Yes		
5	M5	BenPIN	BenPIN	M8	M2		Yes		
6	M6			M8	M2		Yes		
7	M7						Yes		
8	M8						Yes		
9	M9	BenPIN	BenPIN				Yes	Yes	
10	M10	BenPIN	BenPIN				Yes	Yes	
11	M11	BenPIN	BenPIN				Yes		
12	M12	BenPIN	BenPIN				Yes		
13	M13	BenPIN	BenPIN				Yes		
14	M14	BenPIN	BenPIN				Yes		

Member Advanced Data (Continued)

	Label	I Release	J Release	I Offset[in]	J Offset[in]	T/C Only	Physical	TOM	Inactive
15	M15	BenPIN	BenPIN				Yes		
16	M16	BenPIN	BenPIN				Yes	Yes	
17	M17	BenPIN	BenPIN			Tension Only	Yes		
18	M18	BenPIN	BenPIN			Tension Only	Yes		
19	M19	BenPIN	BenPIN			Tension Only	Yes		
20	M20	BenPIN	BenPIN			Tension Only	Yes		
21	M21	BenPIN	BenPIN				Yes	Yes	
22	M22	BenPIN					Yes		
23	M23	BenPIN					Yes		
24	M24	BenPIN	BenPIN				Yes		
25	M25	BenPIN	BenPIN				Yes		

Joint Coordinates and Temperatures

	Label	X [ft]	Y [ft]	Z [ft]	Temp [F]	Detach From Diap...
1	N1	0	14.18	0	0	
2	N2	0	14.18	26.67	0	
3	N3	-7.5	14.18	0	0	
4	N4	-7.5	14.18	26.67	0	
5	N5	0	14.18	.833	0	
6	N6	-7.5	14.18	.833	0	
7	N7	0	14.18	11.8333	0	
8	N8	-7.5	14.18	11.8333	0	
9	N9	0	0	.833	0	
10	N10	-7.5	0	.833	0	
11	N11	0	0	11.8333	0	
12	N12	-7.5	0	11.8333	0	
13	N13	0	0	0	0	
14	N14	0	0	12.6666	0	
15	N15	-7.5	0	0	0	
16	N16	-7.5	0	12.666	0	
17	N17	0	14.18	6.333	0	
18	N18	-7.5	14.18	6.333	0	
19	N19	0	14.18	17.5833	0	
20	N20	-7.5	14.18	17.5833	0	
21	N21	0	14.18	23.333	0	
22	N22	-7.5	14.18	23.333	0	
23	N23	-3.75	14.18	.833	0	
24	N24	-3.75	14.18	23.333	0	
25	N25	-3.75	14.18	6.333	0	
26	N26	-3.75	14.18	11.8333	0	
27	N27	-3.75	14.18	17.5833	0	
28	N28	0	0	1.833	0	
29	N29	-7.5	0	1.833	0	
30	N30	0	0	2.3966	0	
31	N31	-7.5	0	2.396	0	
32	N32	0	0	12.1876	0	
33	N33	-7.5	0	12.187	0	
34	N34	0	-2.25	12.1876	0	
35	N35	-7.5	-2.25	12.187	0	

Joint Boundary Conditions

	Joint Label	X [k/in]	Y [k/in]	Z [k/in]	X Rot.[k-ft/rad]	Y Rot.[k-ft/rad]	Z Rot.[k-ft/rad]	Footing
1	N10							
2	N9							
3	N12							

Joint Boundary Conditions (Continued)

	Joint Label	X [k/in]	Y [k/in]	Z [k/in]	X Rot.[k-ft/rad]	Y Rot.[k-ft/rad]	Z Rot.[k-ft/rad]	Footing
4	N11							
5	N15							
6	N31	Reaction	Reaction	Reaction				
7	N28							
8	N30	Reaction	Reaction	Reaction				
9	N33	Reaction		Reaction				
10	N32	Reaction		Reaction				
11	N29							
12	N16							
13	N14							
14	N34		Reaction					
15	N35		Reaction					

Member Distributed Loads (BLC 4 : Counterweight)

	Member Label	Direction	Start Magnitude[k/ft,...	End Magnitude[k/ft,d...	Start Location[ft,%]	End Location[ft,%]
1	M1	Y	-2.813	-2.813	.5	4.5
2	M2	Y	-2.813	-2.813	.5	4.5

Member Distributed Loads (BLC 8 : 30mph Wind (+)X-Dir)

	Member Label	Direction	Start Magnitude[k/ft,...	End Magnitude[k/ft,d...	Start Location[ft,%]	End Location[ft,%]
1	M2	X	.028	.028	0	0
2	M6	X	.028	.028	0	0
3	M5	X	.028	.028	0	0
4	M8	X	.028	.028	0	0

Member Distributed Loads (BLC 9 : 30mph Wind (-)X-Dir)

	Member Label	Direction	Start Magnitude[k/ft,...	End Magnitude[k/ft,d...	Start Location[ft,%]	End Location[ft,%]
1	M1	X	-.028	-.028	0	0
2	M4	X	-.028	-.028	0	0
3	M3	X	-.028	-.028	0	0
4	M7	X	-.028	-.028	0	0

Member Distributed Loads (BLC 10 : 30mph Wind (+)Z-Dir)

	Member Label	Direction	Start Magnitude[k/ft,...	End Magnitude[k/ft,d...	Start Location[ft,%]	End Location[ft,%]
1	M11	Z	.038	.038	0	0
2	M5	Z	.038	.038	0	0
3	M3	Z	.038	.038	0	0
4	M9	Z	.038	.038	0	0

Member Distributed Loads (BLC 11 : 30mph Wind (-)Z-Dir)

	Member Label	Direction	Start Magnitude[k/ft,...	End Magnitude[k/ft,d...	Start Location[ft,%]	End Location[ft,%]
1	M15	Z	-.038	-.038	0	0
2	M6	Z	-.038	-.038	0	0
3	M4	Z	-.038	-.038	0	0
4	M10	Z	-.038	-.038	0	0

Member Distributed Loads (BLC 12 : 150mph Wind (+)X-Dir)

	Member Label	Direction	Start Magnitude[k/ft,...	End Magnitude[k/ft,d...	Start Location[ft,%]	End Location[ft,%]
1	M2	X	.281	.281	0	0
2	M6	X	.281	.281	0	0
3	M5	X	.281	.281	0	0
4	M8	X	.281	.281	0	0

Member Distributed Loads (BLC 13 : 150mph Wind (-)X-Dir)

	Member Label	Direction	Start Magnitude[k/ft,...	End Magnitude[k/ft,d...	Start Location[ft,%]	End Location[ft,%]
1	M1	X	-.281	-.281	0	0
2	M4	X	-.281	-.281	0	0
3	M3	X	-.281	-.281	0	0
4	M7	X	-.281	-.281	0	0

Member Distributed Loads (BLC 14 : 150mph Wind (+)Z-Dir)

	Member Label	Direction	Start Magnitude[k/ft,...	End Magnitude[k/ft,d...	Start Location[ft,%]	End Location[ft,%]
1	M11	Z	.302	.302	0	0
2	M5	Z	.302	.302	0	0
3	M3	Z	.302	.302	0	0
4	M9	Z	.302	.302	0	0

Member Distributed Loads (BLC 15 : 150mph Wind (-)Z-Dir)

	Member Label	Direction	Start Magnitude[k/ft,...	End Magnitude[k/ft,d...	Start Location[ft,%]	End Location[ft,%]
1	M15	Z	-.302	-.302	0	0
2	M6	Z	-.302	-.302	0	0
3	M4	Z	-.302	-.302	0	0
4	M10	Z	-.302	-.302	0	0

Member Distributed Loads (BLC 16 : DBE EQ (+)X-Dir)

	Member Label	Direction	Start Magnitude[k/ft,...	End Magnitude[k/ft,d...	Start Location[ft,%]	End Location[ft,%]
1	M2	X	.127	.127	0	0
2	M1	X	.127	.127	0	0

Member Distributed Loads (BLC 17 : DBE EQ (-)X-Dir)

	Member Label	Direction	Start Magnitude[k/ft,...	End Magnitude[k/ft,d...	Start Location[ft,%]	End Location[ft,%]
1	M1	X	-.127	-.127	0	0
2	M2	X	-.127	-.127	0	0

Member Distributed Loads (BLC 18 : DBE EQ (+)Y-Dir)

	Member Label	Direction	Start Magnitude[k/ft,...	End Magnitude[k/ft,d...	Start Location[ft,%]	End Location[ft,%]
1	M2	Y	.02	.02	0	0
2	M1	Y	.02	.02	0	0
3	M15	Y	.02	.02	0	0
4	M14	Y	.02	.02	0	0
5	M13	Y	.02	.02	0	0
6	M12	Y	.02	.02	0	0
7	M11	Y	.02	.02	0	0

Member Distributed Loads (BLC 19 : DBE EQ (-)Y-Dir)

	Member Label	Direction	Start Magnitude[k/ft,...	End Magnitude[k/ft,d...	Start Location[ft,%]	End Location[ft,%]
1	M2	Y	-.02	-.02	0	0
2	M15	Y	-.02	-.02	0	0
3	M14	Y	-.02	-.02	0	0
4	M13	Y	-.02	-.02	0	0
5	M12	Y	-.02	-.02	0	0
6	M11	Y	-.02	-.02	0	0
7	M1	Y	-.02	-.02	0	0

Member Distributed Loads (BLC 20 : DBE EQ (+)Z-Dir)

	Member Label	Direction	Start Magnitude[k/ft,...	End Magnitude[k/ft,d...	Start Location[ft,%]	End Location[ft,%]
1	M11	Z	.18	.18	0	0
2	M12	Z	.18	.18	0	0
3	M13	Z	.18	.18	0	0

Member Distributed Loads (BLC 20 : DBE EQ (+)Z-Dir) (Continued)

	Member Label	Direction	Start Magnitude[k/ft,...	End Magnitude[k/ft,d...	Start Location[ft,%]	End Location[ft,%]
4	M14	Z	.18	.18	0	0
5	M15	Z	.18	.18	0	0

Member Distributed Loads (BLC 21 : DBE EQ (-)Z-Dir)

	Member Label	Direction	Start Magnitude[k/ft,...	End Magnitude[k/ft,d...	Start Location[ft,%]	End Location[ft,%]
1	M15	Z	-.18	-.18	0	0
2	M14	Z	-.18	-.18	0	0
3	M13	Z	-.18	-.18	0	0
4	M12	Z	-.18	-.18	0	0
5	M11	Z	-.18	-.18	0	0

Member Distributed Loads (BLC 22 : MHE EQ (+)X-Dir)

	Member Label	Direction	Start Magnitude[k/ft,...	End Magnitude[k/ft,d...	Start Location[ft,%]	End Location[ft,%]
1	M2	X	.326	.326	0	0
2	M1	X	.326	.326	0	0

Member Distributed Loads (BLC 23 : MHE EQ (-)X-Dir)

	Member Label	Direction	Start Magnitude[k/ft,...	End Magnitude[k/ft,d...	Start Location[ft,%]	End Location[ft,%]
1	M1	X	-.326	-.326	0	0
2	M2	X	-.326	-.326	0	0

Member Distributed Loads (BLC 24 : MHE EQ (+)Y-Dir)

	Member Label	Direction	Start Magnitude[k/ft,...	End Magnitude[k/ft,d...	Start Location[ft,%]	End Location[ft,%]
1	M2	Y	.058	.058	0	0
2	M1	Y	.058	.058	0	0
3	M15	Y	.058	.058	0	0
4	M14	Y	.058	.058	0	0
5	M13	Y	.058	.058	0	0
6	M12	Y	.058	.058	0	0
7	M11	Y	.058	.058	0	0

Member Distributed Loads (BLC 25 : MHE EQ (-)Y-Dir)

	Member Label	Direction	Start Magnitude[k/ft,...	End Magnitude[k/ft,d...	Start Location[ft,%]	End Location[ft,%]
1	M2	Y	-.058	-.058	0	0
2	M15	Y	-.058	-.058	0	0
3	M14	Y	-.058	-.058	0	0
4	M13	Y	-.058	-.058	0	0
5	M12	Y	-.058	-.058	0	0
6	M11	Y	-.058	-.058	0	0
7	M1	Y	-.058	-.058	0	0

Member Distributed Loads (BLC 26 : MHE EQ (+)Z-Dir)

	Member Label	Direction	Start Magnitude[k/ft,...	End Magnitude[k/ft,d...	Start Location[ft,%]	End Location[ft,%]
1	M11	Z	.463	.463	0	0
2	M12	Z	.463	.463	0	0
3	M13	Z	.463	.463	0	0
4	M14	Z	.463	.463	0	0
5	M15	Z	.463	.463	0	0

Member Distributed Loads (BLC 27 : MHE EQ (-)Z-Dir)

	Member Label	Direction	Start Magnitude[k/ft,...	End Magnitude[k/ft,d...	Start Location[ft,%]	End Location[ft,%]
1	M15	Z	-.463	-.463	0	0
2	M14	Z	-.463	-.463	0	0
3	M13	Z	-.463	-.463	0	0

Member Distributed Loads (BLC 27 : MHE EQ (-)Z-Dir) (Continued)

	Member Label	Direction	Start Magnitude[k/ft,...	End Magnitude[k/ft,d...	Start Location[ft,%]	End Location[ft,%]
4	M12	Z	-.463	-.463	0	0
5	M11	Z	-.463	-.463	0	0

Joint Loads and Enforced Displacements

Joint Label	L,D,M	Direction	Magnitude[k,k-ft in,rad k*s^2/ft]
No Data to Print ...			

Member Point Loads (BLC 2 : Platform Dead)

	Member Label	Direction	Magnitude[k,k-ft]	Location[ft,%]
1	M1	Y	-.96	17.85
2	M2	Y	-.96	17.85
3	M2	Y	-.96	21.85
4	M1	Y	-.96	21.85

Member Point Loads (BLC 3 : Platform Live)

	Member Label	Direction	Magnitude[k,k-ft]	Location[ft,%]
1	M2	Y	-.65	21.85
2	M1	Y	-.65	21.85
3	M2	Y	-.65	17.85
4	M1	Y	-.65	17.85

Member Point Loads (BLC 4 : Counterweight)

	Member Label	Direction	Magnitude[k,k-ft]	Location[ft,%]
1	M16	Y	-2	%50
2	M9	Y	-2	%50

Member Point Loads (BLC 5 : Hoist In)

	Member Label	Direction	Magnitude[k,k-ft]	Location[ft,%]
1	M21	Y	-11.8	4

Member Point Loads (BLC 6 : Hoist Out)

	Member Label	Direction	Magnitude[k,k-ft]	Location[ft,%]
1	M21	Y	-11.8	20

Member Point Loads (BLC 7 : Tractel Basket)

	Member Label	Direction	Magnitude[k,k-ft]	Location[ft,%]
1	M2	Y	-1.1	17.85
2	M1	Y	-1.1	17.85
3	M2	Y	-1.1	21.85
4	M1	Y	-1.1	21.85

Basic Load Cases

	BLC Description	Category	X Gravity	Y Gravity	Z Gravity	Joint	Point	Distributed	Area (Me...	Surface (...
1	Self Weight	DL		-1						
2	Platform Dead	DL					4			
3	Platform Live	LL					4			
4	Counterweight	DL					2	2		
5	Hoist In	LL					1			
6	Hoist Out	LL					1			
7	Tractel Basket	DL					4			
8	30mph Wind (+)X-Dir	WLX						4		

Basic Load Cases (Continued)

	BLC Description	Category	X Gravity	Y Gravity	Z Gravity	Joint	Point	Distributed	Area (Me...	Surface (...
9	30mph Wind (-)X-Dir	WLX						4		
10	30mph Wind (+)Z-Dir	WLZ						4		
11	30mph Wind (-)Z-Dir	WLZ						4		
12	150mph Wind (+)X-Dir	WLX						4		
13	150mph Wind (-)X-Dir	WLX						4		
14	150mph Wind (+)Z-Dir	WLZ						4		
15	150mph Wind (-)Z-Dir	WLZ						4		
16	DBE EQ (+)X-Dir	ELX						2		
17	DBE EQ (-)X-Dir	ELX						2		
18	DBE EQ (+)Y-Dir	ELY						7		
19	DBE EQ (-)Y-Dir	ELY						7		
20	DBE EQ (+)Z-Dir	ELZ						5		
21	DBE EQ (-)Z-Dir	ELZ						5		
22	MHE EQ (+)X-Dir	ELX						2		
23	MHE EQ (-)X-Dir	ELX						2		
24	MHE EQ (+)Y-Dir	ELY						7		
25	MHE EQ (-)Y-Dir	ELY						7		
26	MHE EQ (+)Z-Dir	ELZ						5		
27	MHE EQ (-)Z-Dir	ELZ						5		

Load Combinations

	Description	Solve	PD...	SR...	BLC	Factor	BLC	Factor	BLC	Factor	BLC	Factor	BLC	Factor	BLC	Factor	BLC	Factor	BLC	Factor
1	COG				1	1														
2	DL	Yes			1	1	2	1	4	1	7	1								
3	DL+LL+Hois...	Yes			L2	1	3	1	5	1										
4	DL+LL+Hois...	Yes			L2	1	3	1	6	1										
5	4:1 Equivalent	Yes			L2	1	3	4	6	1										
6	DL+LL+WLX...	Yes			L2	1	3	1	6	1	8	1								
7	DL+LL-WLX...	Yes			L2	1	3	1	6	1	9	1								
8	DL+LL+WLZ...	Yes			L2	1	3	1	6	1	10	1								
9	DL+LL-WLZ...	Yes			L2	1	3	1	6	1	11	1								
10	DL+LL+WLX...	Yes			L2	1	5	1	12	1										
11	DL+LL-WLX...	Yes			L2	1	5	1	13	1										
12	DL+LL+WLZ...	Yes			L2	1	5	1	14	1										
13	DL+LL-WLZ...	Yes			L2	1	5	1	15	1										
14	DL+LL+DBE...	Yes			L2	1	3	1	6	1	16	1	18	1	20	1				
15	DL+LL-DBE(...	Yes			L2	1	3	1	6	1	17	1	19	1	21	1				
16	DL+LL+MH...	Yes			L2	1	5		22	1	24	1	26	1						
17	DL+LL-MHE...	Yes			L2	1	5		23	1	25	1	26	1						

Load Combination Design

	Description	ASIF	CD	ABIF	Service	Hot Rolled	Cold Formed	Wood	Concrete	Footings
1	COG					Yes	Yes	Yes	Yes	Yes
2	DL					Yes	Yes	Yes	Yes	Yes
3	DL+LL+Hoist In					Yes	Yes	Yes	Yes	Yes
4	DL+LL+Hoist Out					Yes	Yes	Yes	Yes	Yes
5	4:1 Equivalent					Yes	Yes	Yes	Yes	Yes
6	DL+LL+WLX30					Yes	Yes	Yes	Yes	Yes
7	DL+LL-WLX30					Yes	Yes	Yes	Yes	Yes
8	DL+LL+WLZ30					Yes	Yes	Yes	Yes	Yes
9	DL+LL-WLZ30					Yes	Yes	Yes	Yes	Yes
10	DL+LL+WLX150	1.33				Yes	Yes	Yes	Yes	Yes
11	DL+LL-WLX150	1.33				Yes	Yes	Yes	Yes	Yes
12	DL+LL+WLZ150	1.33				Yes	Yes	Yes	Yes	Yes
13	DL+LL-WLZ150	1.33				Yes	Yes	Yes	Yes	Yes

Load Combination Design (Continued)

	Description	ASIF	CD	ABIF	Service	Hot Rolled	Cold Formed	Wood	Concrete	Footings
14	DL+LL+DBE(X)+...					Yes	Yes	Yes	Yes	Yes
15	DL+LL-DBE(X)-...					Yes	Yes	Yes	Yes	Yes
16	DL+LL+MHE(X)...	1.33				Yes	Yes	Yes	Yes	Yes
17	DL+LL-MHE(X)-...	1.33				Yes	Yes	Yes	Yes	Yes

Envelope Joint Displacements

	Joint		X [in]	lc	Y [in]	lc	Z [in]	lc	X Rotation ...	lc	Y Rotation ...	lc	Z Rotation [...	lc
1	N1	max	.094	10	.004	5	1.215	17	7.147e-6	13	3.785e-3	16	0	16
2		min	-.094	16	-.037	10	-.292	13	-6.792e-4	17	-3.79e-3	17	0	11
3	N2	max	3.743	16	-.087	13	1.216	17	3.546e-3	5	1.94e-2	16	0	16
4		min	-3.753	17	-.599	5	-.293	13	5.158e-4	13	-1.944e-2	17	-4.444e-2	11
5	N3	max	.094	10	.004	5	1.197	16	5.577e-5	15	3.76e-3	16	4.056e-2	10
6		min	-.093	16	-.037	11	-.353	15	-6.641e-4	16	-3.813e-3	17	-4.008e-3	16
7	N4	max	3.744	16	-.087	13	1.197	16	3.546e-3	5	1.942e-2	16	4.066e-3	17
8		min	-3.752	17	-.599	5	-.354	15	5.159e-4	13	-1.942e-2	17	-4.008e-3	16
9	N5	max	.105	10	.006	5	1.215	17	7.223e-6	13	3.787e-3	16	0	16
10		min	-.104	11	-.037	10	-.292	13	-6.791e-4	17	-3.792e-3	17	-5.846e-3	11
11	N6	max	.106	10	.006	5	1.197	16	5.585e-5	15	3.762e-3	16	4.056e-2	10
12		min	-.103	11	-.037	11	-.353	15	-6.64e-4	16	-3.815e-3	17	-4.008e-3	16
13	N7	max	.688	16	.003	17	1.215	17	1.692e-3	5	1.067e-2	16	0	16
14		min	-.696	17	-.031	16	-.292	13	-4.663e-5	13	-1.07e-2	17	-4.444e-2	11
15	N8	max	.691	16	.007	16	1.196	16	1.692e-3	5	1.067e-2	16	4.066e-3	17
16		min	-.692	17	-.035	17	-.353	15	-4.659e-5	13	-1.069e-2	17	-4.008e-3	16
17	N9	max	.019	17	.004	5	0	12	2.164e-4	5	9.54e-4	11	2.369e-2	11
18		min	-.015	11	-.026	17	0	17	-1.384e-3	17	-9.878e-4	17	-2.276e-2	10
19	N10	max	.018	10	.004	15	0	12	3.287e-4	15	9.774e-4	16	2.102e-2	11
20		min	-.018	16	-.028	16	0	16	-1.45e-3	16	-1.109e-3	10	-2.63e-2	10
21	N11	max	0	10	.013	17	0	17	2.87e-3	17	1.938e-3	17	5.322e-3	17
22		min	-.009	17	-.01	14	0	13	-6.901e-4	13	-2.201e-4	10	-5.621e-3	10
23	N12	max	.009	16	.015	16	0	16	2.914e-3	16	1.466e-4	17	4.066e-3	17
24		min	0	17	-.014	15	0	13	-1.205e-3	15	-1.913e-3	16	-6.245e-3	10
25	N13	max	.029	17	.006	5	0	12	2.164e-4	5	9.57e-4	11	2.369e-2	11
26		min	-.025	11	-.04	17	0	17	-1.385e-3	17	-9.878e-4	17	-2.276e-2	10
27	N14	max	.012	17	.003	13	0	17	2.872e-3	17	2.056e-3	17	5.322e-3	17
28		min	-.001	10	-.016	17	0	13	-6.96e-4	13	-2.264e-4	10	-5.621e-3	10
29	N15	max	.029	10	.008	15	0	12	3.287e-4	15	9.774e-4	16	2.102e-2	11
30		min	-.028	16	-.042	16	0	16	-1.45e-3	16	-1.112e-3	10	-2.63e-2	10
31	N16	max	0	17	.003	13	0	16	2.92e-3	16	1.478e-4	17	4.066e-3	17
32		min	-.012	16	-.016	17	0	13	-1.228e-3	15	-2.031e-3	16	-6.245e-3	10
33	N17	max	.214	16	.021	5	1.215	17	1.405e-4	5	4.857e-3	16	0	16
34		min	-.217	17	-.032	10	-.292	13	-3.045e-4	17	-4.93e-3	17	-2.514e-2	11
35	N18	max	.214	16	.021	14	1.196	16	1.714e-4	15	4.903e-3	16	2.126e-2	10
36		min	-.217	17	-.033	11	-.353	15	-3.41e-4	16	-4.886e-3	17	-4.008e-3	16
37	N19	max	1.688	16	-.031	13	1.215	17	3.236e-3	5	1.728e-2	16	0	16
38		min	-1.695	17	-.214	5	-.292	13	4.29e-4	13	-1.726e-2	17	-4.444e-2	11
39	N20	max	1.688	16	-.031	13	1.197	16	3.236e-3	5	1.724e-2	16	4.066e-3	17
40		min	-1.695	17	-.214	5	-.354	15	4.291e-4	13	-1.731e-2	17	-4.008e-3	16
41	N21	max	2.968	16	-.066	13	1.216	17	3.545e-3	5	1.926e-2	16	0	16
42		min	-2.976	17	-.457	5	-.293	13	5.144e-4	13	-1.93e-2	17	-4.444e-2	11
43	N22	max	2.968	16	-.066	13	1.197	16	3.545e-3	5	1.928e-2	16	4.066e-3	17
44		min	-2.976	17	-.457	5	-.354	15	5.145e-4	13	-1.928e-2	17	-4.008e-3	16
45	N23	max	.106	10	.009	5	1.059	17	1.065e-2	12	6.37e-3	16	1.459e-4	16
46		min	-.103	11	-.05	11	-.296	15	-1.796e-3	15	-6.383e-3	17	-1.456e-4	17
47	N24	max	2.968	16	-.066	13	.991	17	4.856e-3	15	6.375e-3	16	3.069e-4	17
48		min	-2.976	17	-.494	5	-.32	13	-6.043e-3	16	-6.388e-3	17	-3.085e-4	16
49	N25	max	.214	16	.022	5	1.021	17	1.652e-4	5	5.88e-3	16	2.627e-4	17

Envelope Joint Displacements (Continued)

	Joint		X [in]	lc	Y [in]	lc	Z [in]	lc	X Rotation ...	lc	Y Rotation ...	lc	Z Rotation [...	lc
50		min	-.217	17	-.062	13	-.3	13	-7.459e-4	12	-5.9e-3	17	-2.623e-4	16
51	N26	max	.69	16	-.013	2	1.025	17	1.936e-3	5	9.262e-3	16	3.84e-4	17
52		min	-.695	17	-.036	5	-.298	13	-2.921e-4	13	-9.282e-3	17	-3.839e-4	16
53	N27	max	1.688	16	-.03	13	1.029	17	3.995e-3	5	8.567e-3	16	3.711e-4	17
54		min	-1.695	17	-.25	5	-.294	13	4.092e-4	13	-8.582e-3	17	-3.719e-4	16
55	N28	max	.007	17	.001	5	0	12	2.138e-4	5	7.233e-4	11	2.106e-2	11
56		min	-.004	11	-.01	17	0	17	-1.38e-3	17	-1.e-3	17	-2.227e-2	10
57	N29	max	.005	10	.002	15	0	12	3.577e-4	15	9.896e-4	16	2.027e-2	11
58		min	-.007	16	-.01	16	0	16	-1.444e-3	16	-8.862e-4	10	-2.34e-2	10
59	N30	max	0	13	0	17	0	12	2.121e-4	5	3.825e-4	11	2.012e-2	11
60		min	0	11	0	10	0	13	-1.372e-3	17	-1.016e-3	17	-2.133e-2	10
61	N31	max	0	10	0	16	0	12	4.012e-4	15	1.004e-3	16	1.93e-2	11
62		min	0	12	0	11	0	13	-1.432e-3	16	-5.558e-4	10	-2.244e-2	10
63	N32	max	0	10	0	11	0	17	2.872e-3	17	2.056e-3	17	5.322e-3	17
64		min	0	17	-.009	16	0	13	-6.96e-4	13	-2.264e-4	10	-5.621e-3	10
65	N33	max	0	16	.001	16	0	16	2.92e-3	16	1.478e-4	17	4.066e-3	17
66		min	0	17	-.01	17	0	13	-1.228e-3	15	-2.031e-3	16	-6.245e-3	10
67	N34	max	.003	17	0	11	.027	15	3.479e-3	16	2.056e-3	17	1.125e-4	17
68		min	0	16	0	16	-.094	16	-1.005e-3	15	-2.264e-4	10	-1.663e-5	16
69	N35	max	0	11	0	16	.019	13	3.445e-3	17	1.478e-4	17	6.533e-6	11
70		min	-.003	16	0	17	-.093	17	-6.96e-4	13	-2.031e-3	16	-1.012e-4	16

Envelope Joint Reactions

	Joint		X [k]	lc	Y [k]	lc	Z [k]	lc	MX [k-ft]	lc	MY [k-ft]	lc	MZ [k-ft]	lc
1	N31	max	0	12	20.852	11	.221	13	0	2	0	2	0	2
2		min	-7.262	10	-5.486	16	-3.164	12	0	2	0	2	0	2
3	N30	max	7.454	11	20.785	10	.221	13	0	2	0	2	0	2
4		min	0	13	-5.821	17	-3.165	12	0	2	0	2	0	2
5	N33	max	.168	17	0	2	5.888	13	0	2	0	2	0	2
6		min	-17.19	16	0	2	-10.982	16	0	2	0	2	0	2
7	N32	max	17.176	17	0	2	5.887	13	0	2	0	2	0	2
8		min	-.916	10	0	2	-10.987	17	0	2	0	2	0	2
9	N34	max	0	2	49.718	16	0	2	0	2	0	2	0	2
10		min	0	2	-3.176	11	0	2	0	2	0	2	0	2
11	N35	max	0	2	55.291	17	0	2	0	2	0	2	0	2
12		min	0	2	-8.133	16	0	2	0	2	0	2	0	2
13	N1	max	NC		NC		NC		NC		NC		LOCKED	
14		min	NC		NC		NC		NC		NC		LOCKED	
15	Totals:	max	18.206	11	65.983	5	12.216	13						
16		min	-18.205	10	38.514	16	-17.363	17						

Envelope Member Section Forces

	Member	Sec		Axial[k]	lc	y Shear[k]	lc	z Shear[k]	lc	Torque[k-ft]	lc	y-y Momen...	lc	z-z Momen...	lc
1	M1	1	max	0	2	0	2	0	2	3.165	11	0	2	0	2
2			min	0	2	0	2	0	2	0	16	0	2	0	2
9		5	max	0	2	0	2	0	2	0	2	0	2	0	2
10			min	0	2	0	2	0	2	0	2	0	2	0	2
11	M2	1	max	0	2	0	2	0	2	0	2	0	2	0	2
12			min	0	2	0	2	0	2	0	2	0	2	0	2
19		5	max	0	2	0	2	0	2	0	2	0	2	0	2
20			min	0	2	0	2	0	2	0	2	0	2	0	2
21	M3	1	max	13.784	10	0	2	1.788	11	.002	17	0	11	0	2
22			min	-1.608	5	-1.922	12	0	2	-.002	16	0	10	0	2
29		5	max	13.592	10	1.922	12	0	2	.002	17	0	11	0	2
30			min	-1.8	5	0	2	-1.788	11	-.002	16	0	10	0	2

Envelope Member Section Forces (Continued)

	Member	Sec		Axial[k]	lc	y Shear[k]	lc	z Shear[k]	lc	Torque[k-ft]	lc	y-y Momen...	lc	z-z Momen...	lc
31	M4	1	max	47.377	16	4.976	13	1.788	11	.086	17	0	10	22.022	13
32			min	12.314	2	-11.4	17	0	2	-.074	16	0	17	-68.942	17
39		5	max	46.87	16	2.287	15	0	2	.086	17	0	10	76.13	17
40			min	11.808	2	-11.4	17	-1.788	11	-.074	16	0	17	-18.007	15
41	M5	1	max	13.822	11	0	2	0	2	.002	17	0	11	0	2
42			min	-1.626	14	-1.922	12	-1.788	10	-.002	16	0	10	0	2
49		5	max	13.63	11	1.922	12	1.788	10	.002	17	0	11	0	2
50			min	-1.818	14	0	2	0	2	-.002	16	0	10	0	2
51	M6	1	max	53.025	17	4.976	13	0	17	.139	17	1.954	11	23.375	15
52			min	12.314	2	-11.394	16	-1.868	10	-.161	16	-2.081	10	-68.225	16
59		5	max	52.519	17	4.463	15	1.708	10	.139	17	.127	11	76.767	16
60			min	11.808	2	-11.394	16	-.144	11	-.161	16	-3.094	10	-33.417	15
61	M7	1	max	0	2	0	2	0	2	0	2	0	2	0	2
62			min	0	2	0	2	0	2	0	2	0	2	0	2
69		5	max	0	2	0	2	0	2	0	2	0	2	0	2
70			min	0	2	0	2	0	2	0	2	0	2	0	2
71	M8	1	max	0	2	0	2	0	2	0	2	0	2	0	2
72			min	0	2	0	2	0	2	0	2	0	2	0	2
79		5	max	0	2	0	2	0	2	0	2	0	2	0	2
80			min	0	2	0	2	0	2	0	2	0	2	0	2
81	M9	1	max	.038	5	1.255	16	1.132	12	.029	17	0	2	0	10
82			min	-.388	11	-1.255	5	0	2	-.029	16	0	2	0	17
89		5	max	.038	5	-1.255	16	0	2	.029	17	0	2	0	10
90			min	-.388	11	-1.255	5	-1.133	12	-.029	16	0	2	0	17
91	M10	1	max	.869	10	.113	16	0	2	.007	16	0	2	0	10
92			min	-2.632	11	.113	15	-1.133	13	-.007	17	0	2	0	17
99		5	max	.869	10	-.113	16	1.132	13	.007	16	0	17	0	10
100			min	-2.632	11	-.113	15	0	2	-.007	17	0	13	0	17
101	M11	1	max	2.128	11	1.819	13	1.503	16	.135	12	0	2	0	2
102			min	0	8	-.372	16	-.623	15	-.02	15	0	2	0	2
109		5	max	2.124	10	.4	16	.623	15	.023	15	0	2	0	2
110			min	0	2	-1.819	13	-1.503	16	-.135	12	0	2	0	2
111	M12	1	max	.93	11	4.012	12	1.402	16	.003	17	0	2	0	2
112			min	0	12	-.103	15	-.607	15	-.007	10	0	2	0	2
119		5	max	.936	10	.107	15	.518	15	.007	11	0	2	0	2
120			min	0	13	-4.012	12	-1.391	17	-.003	16	0	2	0	2
121	M13	1	max	10.248	16	1.278	5	2.124	17	.004	15	0	2	0	2
122			min	0	5	.296	16	-.342	10	-.005	12	0	2	0	2
129		5	max	10.247	17	-.519	2	.86	15	.005	12	0	2	0	2
130			min	0	5	-1.278	5	-2.125	16	-.004	15	0	2	0	2
131	M14	1	max	1.091	11	3.006	15	4.728	17	.009	14	0	2	0	2
132			min	-.644	16	-.175	16	-.802	10	0	17	0	2	0	2
139		5	max	1.084	10	.341	16	1.723	15	0	16	0	2	0	2
140			min	-.636	17	-3.071	15	-4.712	16	-.009	15	0	2	0	2
141	M15	1	max	1.2	11	3.034	15	1.94	17	.026	15	0	2	0	2
142			min	-.646	16	-.125	16	-.992	13	-.085	17	0	2	0	2
149		5	max	1.199	10	.262	16	.992	13	.084	17	0	2	0	2
150			min	-.648	17	-3.088	15	-1.94	17	-.026	15	0	2	0	2
151	M16	1	max	.188	17	1.113	2	0	2	.004	17	0	2	0	10
152			min	-.615	10	1.113	2	0	2	-.004	16	0	2	0	11
159		5	max	.188	17	-1.113	2	0	2	.004	17	0	5	0	10
160			min	-.615	10	-1.113	2	0	2	-.004	16	0	17	0	11
161	M17	1	max	0	2	0	2	0	2	0	2	0	2	0	2
162			min	-38.257	16	0	2	0	2	-.049	16	0	2	0	2
169		5	max	0	2	0	2	0	2	0	2	0	2	0	2
170			min	-38.257	16	0	2	0	2	-.049	16	0	2	0	2
171	M18	1	max	0	2	0	2	0	2	.05	17	0	2	0	2

Envelope Member Section Forces (Continued)

	Member	Sec		Axial[k]	lc	y Shear[k]	lc	z Shear[k]	lc	Torque[k-ft]	lc	y-y Momen...	lc	z-z Momen...	lc
172			min	-38.249	17	0	2	0	2	0	2	0	2	0	2
179		5	max	0	2	0	2	0	2	.05	17	0	2	0	2
180			min	-38.249	17	0	2	0	2	0	2	0	2	0	2
181	M19	1	max	0	2	0	2	0	2	.011	11	0	2	0	2
182			min	-3.258	11	0	2	0	2	-.014	16	0	2	0	2
189		5	max	0	2	0	2	0	2	.011	11	0	2	0	2
190			min	-3.258	11	0	2	0	2	-.014	16	0	2	0	2
191	M20	1	max	0	2	0	2	0	2	.015	17	0	2	0	2
192			min	-3.231	10	0	2	0	2	-.011	10	0	2	0	2
199		5	max	0	2	0	2	0	2	.015	17	0	2	0	2
200			min	-3.231	10	0	2	0	2	-.011	10	0	2	0	2
201	M21	1	max	.648	12	3.448	13	.245	17	.003	16	0	2	0	17
202			min	-.103	15	-.765	5	-.246	16	-.003	17	0	2	0	15
209		5	max	.408	17	.26	17	1.236	16	0	11	0	17	0	13
210			min	-.126	15	-5.761	15	-1.237	17	0	10	0	16	0	17
211	M22	1	max	55.24	17	0	2	0	2	0	2	0	2	0	2
212			min	-8.185	16	0	2	0	2	0	2	0	2	0	2
219		5	max	55.278	17	0	2	0	2	0	2	0	2	0	2
220			min	-8.146	16	0	2	0	2	0	2	0	2	0	2
221	M23	1	max	49.667	16	0	2	0	2	0	2	0	2	0	2
222			min	-3.228	11	0	2	0	2	0	2	0	2	0	2
229		5	max	49.705	16	0	2	0	2	0	2	0	2	0	2
230			min	-3.189	11	0	2	0	2	0	2	0	2	0	2
231	M24	1	max	-.004	10	.012	3	0	2	0	2	0	2	0	2
232			min	-.004	17	.012	8	0	2	0	2	0	2	0	2
239		5	max	.004	10	-.012	3	0	2	0	2	0	2	0	2
240			min	.004	17	-.012	8	0	2	0	2	0	2	0	2
241	M25	1	max	.004	5	.012	14	0	2	0	2	0	2	0	2
242			min	.004	16	.012	5	0	2	0	2	0	2	0	2
249		5	max	-.004	5	-.012	14	0	2	0	2	0	2	0	2
250			min	-.004	16	-.012	5	0	2	0	2	0	2	0	2

Envelope Member Section Stresses

	Member	Sec		Axial[ksi]	lc	y Shea...	lc	z Shea...	lc	y-Top[ksi]	lc	y-Bot[ksi]	lc	z-Top[k...	lc	z-Bot[k...	lc
1	M1	1	max	0	2	0	2	0	2	0	2	0	2	0	2	0	2
2			min	0	2	0	2	0	2	0	2	0	2	0	2	0	2
9		5	max	0	2	0	2	0	2	0	2	0	2	0	2	0	2
10			min	0	2	0	2	0	2	0	2	0	2	0	2	0	2
11	M2	1	max	0	2	0	2	0	2	0	2	0	2	0	2	0	2
12			min	0	2	0	2	0	2	0	2	0	2	0	2	0	2
19		5	max	0	2	0	2	0	2	0	2	0	2	0	2	0	2
20			min	0	2	0	2	0	2	0	2	0	2	0	2	0	2
21	M3	1	max	3.112	10	0	2	.574	11	0	2	0	2	0	2	0	2
22			min	-.363	5	-1.395	12	0	2	0	2	0	2	0	2	0	2
29		5	max	3.068	10	1.395	12	0	2	0	2	0	2	0	2	0	2
30			min	-.406	5	0	2	-.574	11	0	2	0	2	0	2	0	2
31	M4	1	max	4.049	16	1.675	13	.198	11	23.374	17	7.466	13	0	2	0	2
32			min	1.053	2	-3.838	17	0	2	-7.466	13	-23.374	17	0	2	0	2
39		5	max	4.006	16	.77	15	0	2	6.105	15	25.811	17	0	2	0	2
40			min	1.009	2	-3.838	17	-.198	11	-25.811	17	-6.105	15	0	2	0	2
41	M5	1	max	3.12	11	0	2	0	2	0	2	0	2	0	2	0	2
42			min	-.367	14	-1.395	12	-.574	10	0	2	0	2	0	2	0	2
49		5	max	3.077	11	1.395	12	.574	10	0	2	0	2	0	2	0	2
50			min	-.41	14	0	2	0	2	0	2	0	2	0	2	0	2
51	M6	1	max	4.532	17	1.675	13	0	2	23.131	16	7.925	15	1.927	11	2.052	10
52			min	1.053	2	-3.836	16	-.207	10	-7.925	15	-23.131	16	-2.052	10	-1.927	11

Envelope Member Section Stresses (Continued)

	Member	Sec		Axial[ksi]	lc	y Shea...	lc	z Shea...	lc	y-Top[ksi]	lc	y-Bot[ksi]	lc	z-Top[k...	lc	z-Bot[k...	lc
59		5	max	4.489	17	1.503	15	.189	10	11.33	15	26.027	16	.125	11	3.051	10
60			min	1.009	2	-3.836	16	-.016	11	-26.027	16	-11.33	15	-3.051	10	-.125	11
61	M7	1	max	0	2	0	2	0	2	0	2	0	2	0	2	0	2
62			min	0	2	0	2	0	2	0	2	0	2	0	2	0	2
69		5	max	0	2	0	2	0	2	0	2	0	2	0	2	0	2
70			min	0	2	0	2	0	2	0	2	0	2	0	2	0	2
71	M8	1	max	0	2	0	2	0	2	0	2	0	2	0	2	0	2
72			min	0	2	0	2	0	2	0	2	0	2	0	2	0	2
79		5	max	0	2	0	2	0	2	0	2	0	2	0	2	0	2
80			min	0	2	0	2	0	2	0	2	0	2	0	2	0	2
81	M9	1	max	.002	5	.215	16	.078	12	0	2	0	2	0	2	0	2
82			min	-.019	11	.215	5	0	2	0	2	0	2	0	2	0	2
89		5	max	.002	5	-.215	16	0	2	0	2	0	2	0	2	0	2
90			min	-.019	11	-.215	5	-.078	12	0	2	0	2	0	2	0	2
91	M10	1	max	.098	10	.03	16	0	2	0	17	0	10	0	2	0	2
92			min	-.297	11	.03	15	-.219	13	0	10	0	17	0	2	0	2
99		5	max	.098	10	-.03	16	.219	13	0	17	0	10	0	17	0	2
100			min	-.297	11	-.03	15	0	2	0	10	0	17	0	2	0	17
101	M11	1	max	.285	11	.585	13	.328	16	0	2	0	2	0	2	0	2
102			min	0	2	-.12	16	-.136	15	0	2	0	2	0	2	0	2
109		5	max	.285	10	.129	16	.136	15	0	2	0	2	0	2	0	2
110			min	0	2	-.585	13	-.328	16	0	2	0	2	0	2	0	2
111	M12	1	max	.125	11	1.29	12	.306	16	0	2	0	2	0	2	0	2
112			min	0	2	-.033	15	-.133	15	0	2	0	2	0	2	0	2
119		5	max	.125	10	.034	15	.113	15	0	2	0	2	0	2	0	2
120			min	0	2	-1.29	12	-.304	17	0	2	0	2	0	2	0	2
121	M13	1	max	1.374	16	.411	5	.464	17	0	2	0	2	0	2	0	2
122			min	0	5	.095	16	-.075	10	0	2	0	2	0	2	0	2
129		5	max	1.374	17	-.167	2	.188	15	0	2	0	2	0	2	0	2
130			min	0	5	-.411	5	-.464	16	0	2	0	2	0	2	0	2
131	M14	1	max	.132	11	1.308	15	.778	17	0	2	0	2	0	2	0	2
132			min	-.078	16	-.076	16	-.132	10	0	2	0	2	0	2	0	2
139		5	max	.131	10	.148	16	.284	15	0	2	0	2	0	2	0	2
140			min	-.077	17	-1.337	15	-.775	16	0	2	0	2	0	2	0	2
141	M15	1	max	.145	11	1.321	15	.319	17	0	2	0	2	0	2	0	2
142			min	-.078	16	-.054	16	-.163	13	0	2	0	2	0	2	0	2
149		5	max	.145	10	.114	16	.163	13	0	2	0	2	0	2	0	2
150			min	-.079	17	-1.344	15	-.319	17	0	2	0	2	0	2	0	2
151	M16	1	max	.021	17	.298	2	0	2	0	11	0	10	0	2	0	2
152			min	-.07	10	.298	2	0	2	0	10	0	11	0	2	0	2
159		5	max	.021	17	-.298	2	0	2	0	11	0	10	0	2	0	17
160			min	-.07	10	-.298	2	0	2	0	10	0	11	0	17	0	2
161	M17	1	max	0	2	0	2	0	2	0	2	0	2	0	2	0	2
162			min	-41.733	16	0	2	0	2	0	2	0	2	0	2	0	2
169		5	max	0	2	0	2	0	2	0	2	0	2	0	2	0	2
170			min	-41.733	16	0	2	0	2	0	2	0	2	0	2	0	2
171	M18	1	max	0	2	0	2	0	2	0	2	0	2	0	2	0	2
172			min	-41.725	17	0	2	0	2	0	2	0	2	0	2	0	2
179		5	max	0	2	0	2	0	2	0	2	0	2	0	2	0	2
180			min	-41.725	17	0	2	0	2	0	2	0	2	0	2	0	2
181	M19	1	max	0	2	0	2	0	2	0	2	0	2	0	2	0	2
182			min	-3.554	11	0	2	0	2	0	2	0	2	0	2	0	2
189		5	max	0	2	0	2	0	2	0	2	0	2	0	2	0	2
190			min	-3.554	11	0	2	0	2	0	2	0	2	0	2	0	2
191	M20	1	max	0	2	0	2	0	2	0	2	0	2	0	2	0	2
192			min	-3.524	10	0	2	0	2	0	2	0	2	0	2	0	2
199		5	max	0	2	0	2	0	2	0	2	0	2	0	2	0	2

Envelope Member Section Stresses (Continued)

	Member	Sec		Axial[ksi]	lc	y Shea...	lc	z Shea...	lc	y-Top[ksi]	lc	y-Bot[ksi]	lc	z-Top[k...	lc	z-Bot[k...	lc
200			min	-3.524	10	0	2	0	2	0	2	0	2	0	2	0	2
201	M21	1	max	.087	12	1.109	13	.054	17	0	15	0	17	0	2	0	2
202			min	-.014	15	-.246	5	-.054	16	0	17	0	15	0	2	0	2
209		5	max	.055	17	.084	17	.27	16	0	17	0	13	0	17	0	16
210			min	-.017	15	-1.853	15	-.27	17	0	13	0	17	0	16	0	17
211	M22	1	max	10.874	17	0	2	0	2	0	2	0	2	0	2	0	2
212			min	-1.611	16	0	2	0	2	0	2	0	2	0	2	0	2
219		5	max	10.882	17	0	2	0	2	0	2	0	2	0	2	0	2
220			min	-1.603	16	0	2	0	2	0	2	0	2	0	2	0	2
221	M23	1	max	9.777	16	0	2	0	2	0	2	0	2	0	2	0	2
222			min	-.635	11	0	2	0	2	0	2	0	2	0	2	0	2
229		5	max	9.785	16	0	2	0	2	0	2	0	2	0	2	0	2
230			min	-.628	11	0	2	0	2	0	2	0	2	0	2	0	2
231	M24	1	max	-.004	10	.029	3	0	2	0	2	0	2	0	2	0	2
232			min	-.004	17	.029	8	0	2	0	2	0	2	0	2	0	2
239		5	max	.004	10	-.029	3	0	2	0	2	0	2	0	2	0	2
240			min	.004	17	-.029	8	0	2	0	2	0	2	0	2	0	2
241	M25	1	max	.004	5	.029	14	0	2	0	2	0	2	0	2	0	2
242			min	.004	16	.029	5	0	2	0	2	0	2	0	2	0	2
249		5	max	-.004	5	-.029	14	0	2	0	2	0	2	0	2	0	2
250			min	-.004	16	-.029	5	0	2	0	2	0	2	0	2	0	2

Envelope AISC ASD Steel Code Checks

	Member	Shape	Code C...	Loc[ft]	lc	Shear C...	Loc[ft]	Dir	lc	Fa [ksi]	Ft [ksi]	Fb y-y [...	Fb z-z [...	Cb	Cmy	Cmz	ASD Eqn
1	M1	W21x73	.799	11.668	17	.223	11.668	y	11	25.825	28.728	35.91	31.601	1....	.85	.85	H1-2
2	M2	W21x73	.752	11.668	16	.222	11.668	y	10	25.825	28.728	35.91	31.601	1....	.85	.85	H1-2
3	M3	W6X15	.757	6.363	11	.073	12.726	y	12	16.356	28.728	34.925	28.728	1....	1	.6	H1-3
4	M4	W8x40	.965	12.726	17	.227	0	y	17	21.215	28.728	35.91	28.728	2.3	.6	.238	H1-2
5	M5	W6X15	.757	6.363	10	.073	12.726	y	12	16.356	28.728	34.925	28.728	1....	1	.6	H1-3
6	M6	W8x40	.985	12.726	16	.238	7.026	y	16	21.215	28.728	35.91	28.728	2.3	.6	.245	H1-2
7	M7	W14x43	.685	11.743	17	.658	12.139	y	14	20.385	28.728	35.91	28.728	1	.6	.85	H2-1
8	M8	W14x43	.691	11.742	16	.692	12.138	y	17	20.386	28.728	35.91	28.728	1	.6	.85	H2-1
9	M9	W14X68	.045	3.75	12	.017	0	y	14	25.877	28.728	35.91	31.601	1	1	1	H1-1
10	M10	W14x30	.124	3.75	13	.011	0	z	13	23.121	28.728	35.91	28.728	1	1	1	H1-1
11	M11	s10x25.4	.299	4.141	16	.097	0	y	12	24.734	28.728	35.91	31.601	1....	1	1	H1-3
12	M12	s10x25.4	.316	3.75	3	.092	7.5	y	3	18.597	21.6	27	23.76	1...	.6	1	H1-2
13	M13	s10x25.4	.656	3.75	17	.031	7.5	y	5	24.734	28.728	35.91	31.601	1....	1	1	H1-3
14	M14	W8x28	.746	3.75	16	.099	7.5	y	15	26.731	28.728	35.91	31.601	1....	1	1	H1-3
15	M15	W8x28	.335	3.75	15	.114	0	y	14	20.098	21.6	27	23.76	1....	1	1	H2-1
16	M16	W14x30	.053	3.75	15	.022	0	y	14	17.384	21.6	27	21.6	1	.6	1	H1-3
17	M17	3/4 IN WI...	.872	0	16	.075	0		16	5.847	47.88	59.85	59.85	1....	.6	.6	H2-1
18	M18	3/4 IN WI...	.871	0	17	.076	0		17	5.847	47.88	59.85	59.85	1....	.6	.6	H2-1
19	M19	3/4 IN WI...	.074	0	11	.022	0		16	5.847	47.88	59.85	59.85	1....	.6	.6	H2-1
20	M20	3/4 IN WI...	.074	0	10	.022	0		17	5.847	47.88	59.85	59.85	1....	.6	.6	H2-1
21	M21	S10x25.4	.977	11.016	17	.194	5.391	y	3	26.962	28.728	35.91	31.601	1	.6	1	H1-2
22	M22	TU4X4X6	.396	2.25	17	.000	0	y	2	27.509	28.728	31.601	31.601	1...	.6	.6	H1-1
23	M23	TU4X4X6	.376	2.25	14	.000	0	y	2	20.683	21.6	23.76	23.76	1....	.6	.6	H1-1
24	M24	L2X2X4	.001	7.83	3	.002	0	y	3	2.586	21.6	- Code ...					H1-1
25	M25	L2X2X4	.001	0	5	.002	0	y	4	2.586	21.6	- Code ...					H1-1