Registry of Radioactive Sealed Sources and Devices
Safety Evaluation of Sealed Source
(Amended in its Entirety)

SOURCE TYPE: Cylindrical Phantom Source, Photon Emitting

MODEL: BMCY68-DDHH-YY
BMNT57-YY

Note:
DD equals cylinder diameter in centimeters
HH equals cylinder height in centimeters
YY equals nominal activity in millicuries

MANUFACTURER/DISTRIBUTOR: International Isotopes, Inc.
4137 Commerce Circle
Idaho Falls, ID 83401

ISOTOPE:	MAXIMUM ACTIVITY:		
Ge-68	BMCY68	12.0 mCi	(444 MBq)
Co-57	BMNT57	12.0 mCi	(444 MBq)

LEAK TEST FREQUENCY: 6 Months

PRINCIPAL USE: (X) Medical Reference Source

CUSTOM SOURCE: _____ Yes __X__ No

SOURCE TYPE: Cylindrical Phantom Source, Photon Emitting

DESCRIPTION:

These sources consist of Cobalt-57 or Germanium-68 uniformly dispersed in a high impact epoxy resin casting (Emerson & Cuming Stycast 1264 or equivalent). The epoxy containing the dispersed radioactivity is poured into a cylindrical plastic (High Density Polyethylene or equivalent) housing that contains a thin layer of cured non-radioactive epoxy to seal the bottom and to provide a non-radioactive barrier. After the radioactive epoxy resin cures, it is capped with a thin layer of non-radioactive epoxy to seal the top and provide a non-radioactive barrier. After the top non-radioactive epoxy layer cures, a plastic disc (High Density Polyethylene or equivalent) is attached to the cylinder with nylon (or equivalent) Allen head screws. A thread adhesive is applied to the Allen head screws prior to attaching the top and bottom discs to the cylinder walls. After the source has been completely assembled a clear epoxy resin is used to back fill the Allen head screws so that disassembly without destruction of the source is not possible.

The dimensions of the BMNT57 source design are provided in the table below.

Overall Diameter	Active Diameter	Overall Height	Active Height
7.5 in (19.1 cm)	4.0 in (10.2 cm)	5.0 in (12.7 cm)	4.0 in (10.2 cm)

Model BMNT57 Source Dimensions

SOURCE TYPE: Cylindrical Phantom Source, Photon Emitting

DESCRIPTION (Cont.):

The BMCY68 source is designed with a range of dimensions. **M**inimum and maximum **dimensions** are provided in the table below.

Overall Diameter	Active Diameter	Overall Height	Active Height
1.78-8.9 in (**4.52**-22.6 cm)	**0.78**-7.9 in (**2.0**-20.0 cm)	**1.78**-12.4 in (**4.52**-31.5 cm)	**0.78**-11.83 in (**2.0**-30.0 cm)

Model BMCY68 Range of Dimensions

BMCY68 cylinder sources with an active matrix of less than 2.6 inches (6.6 cm) in diameter are limited to a maximum of 5 millicuries activity.

LABELING:

Each source (and shielded container provided as an option to customers that do not currently have a shielded container) is conspicuously labeled with the isotope, activity, the reference date (MM/YY), a unique serial number, the radioactive trefoil symbol, and the warning in words, “Caution Radioactive Material”. The surface of this label material is a combination of rubber (latex) and paper. Below the surface is a thin film barrier coating to provide added strength. The material is flexible and water resistant. The label has an adhesive backing. Once applied to the source and shield a second clear label is applied over the data label to ensure the data label remains legible throughout the life of the source.

One label each is applied to the source and shielded container. These labels are applied to the top of the cylinders and shielded container.

DIAGRAM:

See Attachments 1 **through 3.**

SOURCE TYPE: Cylindrical Phantom Source, Photon Emitting

CONDITIONS OF NORMAL USE:

These source models are to be used as reference standards to check the response of nuclear imaging systems used in diagnostic and therapeutic treatments utilizing radioactive sources. These source models are intended to be used in a laboratory or medical environment, not subject to harsh conditions. The estimated working life of the source is mostly dependent on the half-life of the radioisotope. For Ge-68 and Co-57 models, a working life of 2 years is typical. However, so long as the source satisfies the 6 month leak test criteria, and the labeling remains intact, the source may remain in service.

A prototype of the source was successfully tested in accordance with ANSI/HPS N43.6-1997 and achieved a classification 96C22312, and as such, the source should not be subjected to conditions that exceed these test parameters:

Temperature:	-40°C to -80°C
External Pressure:	25 kN/m^2 abs
Impact:	200 g from 1 m.
Vibration:	No test required for Class 1.
Puncture:	1 g from 1 m.

The applicant explored handling and storage with several options, such as a removable handle or flexible basket have been considered to limit the dose to the user while handling the source. These options are not considered integral to the source itself and are not considered a part of the registration. End users currently having handling attachments and storage shields from previous sources may procure a source without any options.

International Isotopes, Inc. will distribute sources to customers specifically licensed by the NRC or an Agreement State or when sources are exported, licensed or authorized by appropriate foreign authority.

SOURCE TYPE: Cylindrical Phantom Source, Photon Emitting

PROTOTYPE TESTING:

A prototype of a BMNT57, containing 1 mCi of Co-57 was constructed and subjected to the environmental tests in ANSI/HPS N43.6-1997, Table 1*, Classification of sealed-source performance tests*, and achieved a classification of 96C22312 (Calibration Source). Because of the similarity between the BMNT57 and BMCY68 models, an engineering analysis was done for BMCY68 and the results of the prototype test for BMNT57 are applicable. An analysis of the leak tests was performed to show that a source containing 12.0 millicuries would have passed the leak tests.

EXTERNAL RADIATION LEVELS:

Radiation exposure rates were modeled by the manufacturer using MicroShield 7.0, and are tabulated below. Calculated dose rates are shown in units of mrem/hr.

Co-57 12 mCi	Modeled from Side (Without Buildup)	Modeled from Side (With Buildup)	Modeled from Top (Without Buildup)	Modeled from Top (With Buildup)
Contact	78.3	252.9	91.5	272.8
5 cm	28.1	89.3	33.5	95.7
30 cm	2.6	8.5	2.6	8.6
100 cm	0.3	1.0	0.3	1.0

Model BMNT57 with 4.0 inch (10.2 cm) diameter by 4.0 inch (10.2 cm) high active source matrix

SOURCE TYPE: Cylindrical Phantom Source, Photon Emitting

EXTERNAL RADIATION LEVELS (Cont.):

Ge-68 12 mCi	Modeled from Side (Without Buildup)	Modeled from Side (With Buildup)	Modeled from Top (Without Buildup)	Modeled from Top (With Buildup)
Contact	2157	2982	2380	3219
5 cm	552.3	762.9	574.9	787.5
30 cm	39.3	54.9	39.2	55.8
100 cm	4.2	5.9	4.1	5.9

Model BMCY68 with 2.36 inch (6 cm) diameter by
2.35 inch (6 cm) high active source matrix
(most compact geometry)

Ge-68 12 mCi	Modeled from Side (Without Buildup)	Modeled from Side (With Buildup)	Modeled from Top (Without Buildup)	Modeled from Top (With Buildup)
Contact	173.9	372.8	181.6	360.8
5 cm	99	203.3	94.7	183.5
30 cm	17	34.2	12.4	27.3
100 cm	2.3	4.8	1.6	3.8

Model BMCY68 with 7.9 inch (20.1 cm) diameter by
11.83 inch(30 cm) high active source matrix
(most disperse geometry)

SOURCE TYPE: Cylindrical Phantom Source, Photon Emitting

EXTERNAL RADIATION LEVELS (Cont.):

Ge-68 5 mCi	Modeled from Side (Without Buildup)	Modeled from Side (With Buildup)	Modeled from Top (Without Buildup)	Modeled from Top (With Buildup)
Contact	3153	3805	3288	3951
5 cm	447	540	447	541
30 cm	22	27	22	27
100 cm	2.2	2.7	2.2	2.7

Model BMCY with 0.78 inch (1.98 cm) diameter by 0.78 inch (1.98 cm) high active source matrix (most compact geometry)

QUALITY ASSURANCE AND CONTROL:

International Isotopes, Inc. provides for design control, procurement control, process quality control and final quality assurance.

Quality related activities shall be controlled and conducted using documented procedures including instructions drawings, process diagrams, or other appropriate documents. Quality records are prepared, stored, preserved and kept safe in appropriate facilities. Periodic audits by International Isotopes, Inc. Quality Assurance staff will ensure that the program continues to perform as intended.

No source will be distributed by International Isotopes, Inc. if it has not passed leak testing performed in accordance with ANSI/HPS N43.6-1997. Sources will only be distributed to authorized recipients.

SOURCE TYPE: Cylindrical Phantom Source, Photon Emitting

LIMITATIONS AND/OR OTHER CONSIDERATIONS OF USE:

- The sources shall be distributed to persons specifically licensed by the NRC or an Agreement State.
- Handling, storage, use, transfer and disposal to be determined by the licensing authority.
- The sources shall be leak tested at intervals not to exceed 6 months using techniques capable of detecting 0.005 microcuries (185 Bq) of removable contamination.
- The sources shall not be subjected to conditions that exceed its ANSI/HPS N43.6-1997 classification 96C22312.
- This registration sheet and the information contained within the references shall not be modified without the written consent of the Nuclear Regulatory Commission.
- **The effective date for the change to the BMCY source minimum dimensions is October 1, 2010.**

SAFETY ANALYSIS SUMMARY:

Based on our review of Model BMCY68 and BMNT57 and the information and test data cited, we conclude that this source model would be expected to maintain its containment integrity for normal use and likely accidental conditions, and therefore is acceptable for licensing purposes.

SOURCE TYPE: Cylindrical Phantom Source, Photon Emitting

REFERENCES:

The following supporting documents for the International Isotope Model BMCY68 and BMNT57 Series sources are hereby incorporated by reference and made a part of this registry document:

- International Isotope Inc.'s application dated February 24, 2009, with enclosures thereto.
- International Isotope Inc.'s letter and emails dated May 21, 27, and 28, 2009, with enclosures thereto.
- International Isotope Inc.'s emails dated June 1, 5, and 30, 2009, with enclosures thereto.
- International Isotope Inc.'s email dated July 15 and 17, 2009, with enclosures thereto.
- **International Isotope Inc.'s letter dated August 9, 2010, and electronic mail dated September 24, 2010, with enclosures thereto.**

ISSUING AGENCY:

U.S. Nuclear Regulatory Commission

Date: September 29, 2010 Reviewer: **/RA/**
Ujagar S. Bhachu

Date: September 29, 2010 Concurrence: **/RA/**
John P. Jankovich

REGISTRY OF RADIOACTIVE SEALED SOURCES AND DEVICES
SAFETY EVALUATION OF SEALED SOURCE
(AMENDED IN ITS ENTIRETY)

NO.: NR-1235-S-108-S DATE: **September 29, 2010** ATTACHMENT 1 OF **3**

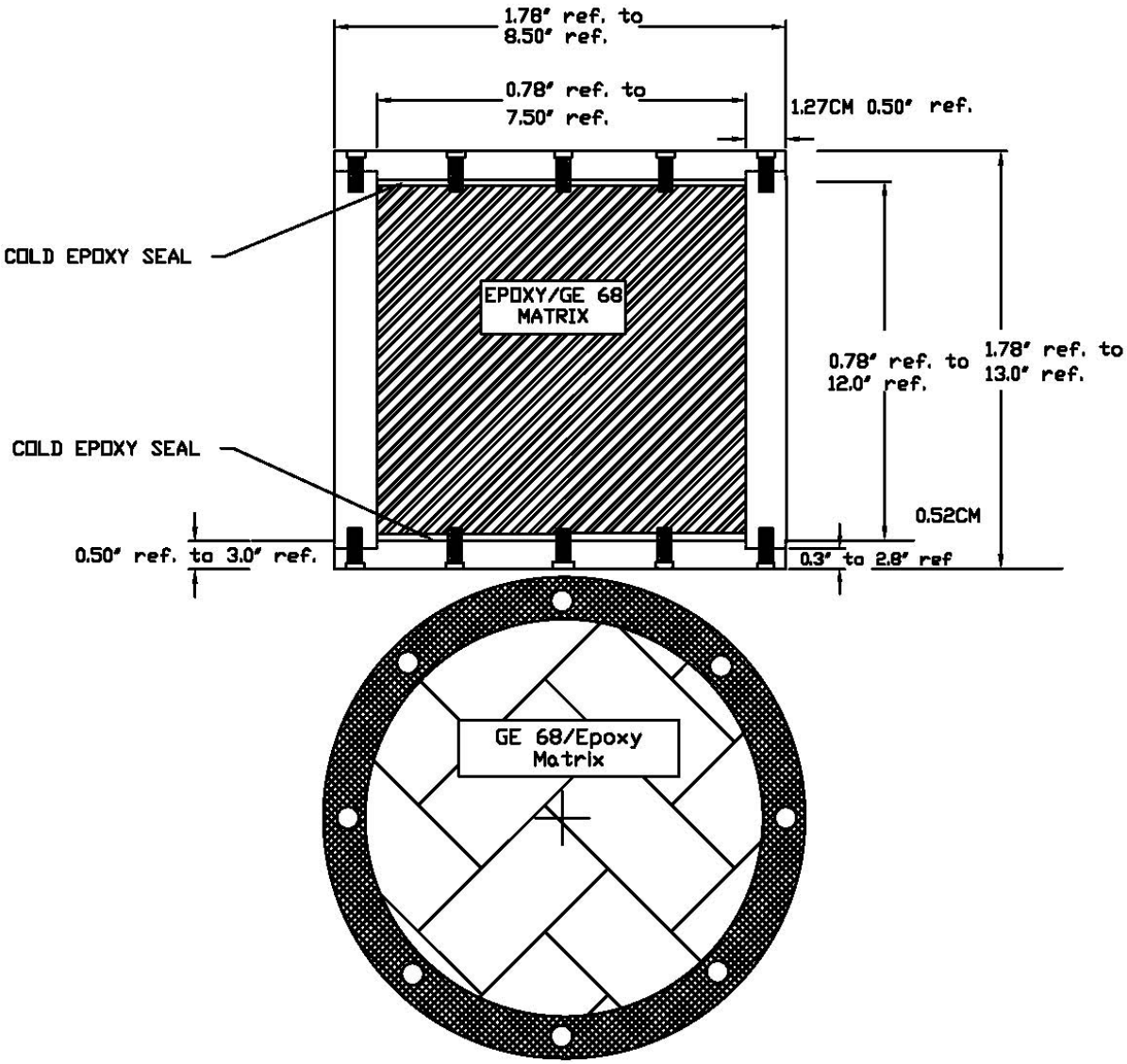

Model BMCY-68-DDHH-YY Source

REGISTRY OF RADIOACTIVE SEALED SOURCES AND DEVICES
SAFETY EVALUATION OF SEALED SOURCE
(AMENDED IN ITS ENTIRETY)

NO.: NR-1235-S-108-S DATE: **September 29, 2010** ATTACHMENT 2 OF **3**

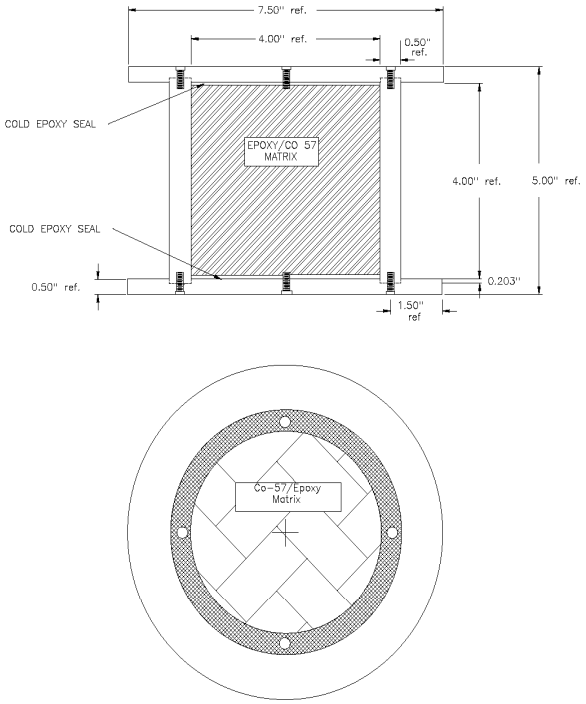

Model BMNT-57-YY Source

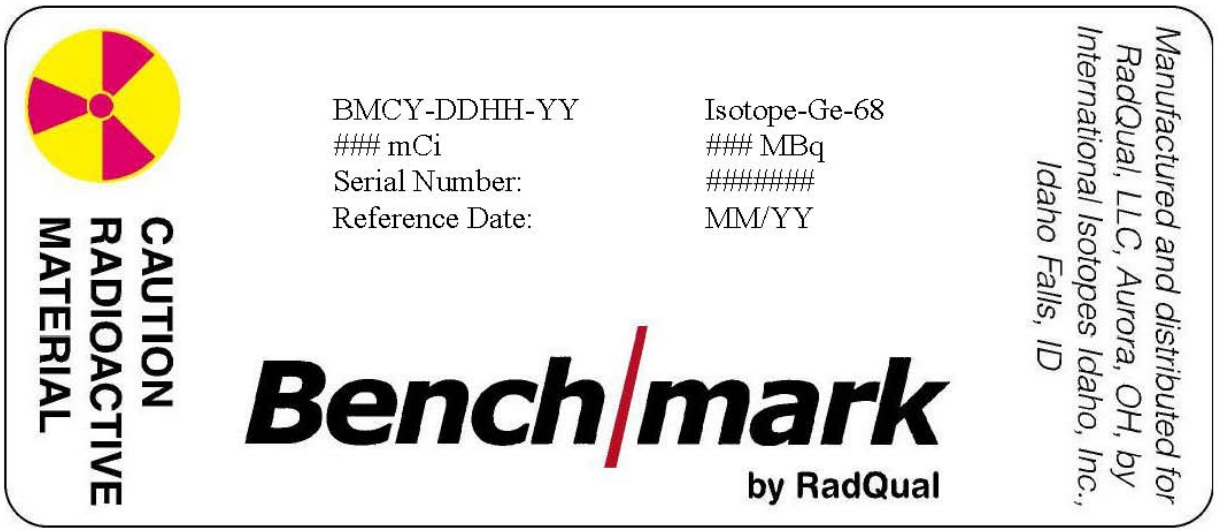

Source Label Example