Official Transcript of Proceedings

NUCLEAR REGULATORY COMMISSION

Title: Advisory Committee on Reactor Safeguards
575th Meeting: Open Session

Docket Number: (n/a)

Location: Rockville, Maryland

Date: Thursday, September 9, 2010

Work Order No.: NRC-409 Pages 1-276

NEAL R. GROSS AND CO., INC.
Court Reporters and Transcribers
1323 Rhode Island Avenue, N.W.
Washington, D.C. 20005
(202) 234-4433

DISCLAIMER

UNITED STATES NUCLEAR REGULATORY COMMISSION'S
ADVISORY COMMITTEE ON REACTOR SAFEGUARDS

The contents of this transcript of the proceeding of the United States Nuclear Regulatory Commission Advisory Committee on Reactor Safeguards, as reported herein, is a record of the discussions recorded at the meeting.

This transcript has not been reviewed, corrected, and edited, and it may contain inaccuracies.

UNITED STATES OF AMERICA

NUCLEAR REGULATORY COMMISSION

+ + + + +

575TH MEETING

ADVISORY COMMITTEE ON REACTOR SAFEGUARDS (ACRS)

+ + + + +

THURSDAY, SEPTEMBER 9, 2010

+ + + + +

ROCKVILLE, MARYLAND

The Committee met at the Nuclear Regulatory Commission, Two White Flint North, Room T2B1, 11545 Rockville Pike, at 8:30 a.m., Said Abdel-Khalik, Chairman, presiding.

COMMITTEE MEMBERS:

SAID ABDEL-KHALIK, Chairman

J. SAM ARMIJO, Vice Chairman

JOHN W. STETKAR, Member-at-Large

SANJOY BANERJEE, Member

DENNIS C. BLEY, Member

MARIO V. BONACA, Member

MICHAEL L. CORRADINI, Member

DANA A. POWERS, Member

HAROLD B. RAY, Member

MICHAEL T. RYAN, Member

WILLIAM J. SHACK, Member

ACRS STAFF PRESENT:

EDWIN M. HACKETT, Executive Director

CHRIS BROWN, Designated Federal Official

NEIL COLEMAN, Designated Federal Official

TANNY SANTOS, JR., Designated Federal Official

BRUCE BAVOL

ILKA BERRIOS

LARRY CAMPBELL

AMY CUBBAGE

JAMES GILMER

CHRISTOPHER HOTT

JOHN LEHNING

JOHN McKIRGAN

KEVIN MORRISSEY

BILL RULAND

MICHAEL SCOTT

GEORGE THOMAS

DAVE TIKTINSKY

CHRISTOPHER TRIPP

HANRY WAGAGE

REX WESCOTT

ALSO PRESENT:

SVEN BADER, MOX Services

GARY BELL, MOX Services

JOHN BUTLER, NEI

JESUS DIAZ-QUIROZ, GEH

PAUL DUVAL, MOX Services

BOB FOSTER, MOX Services

DEATIS GWYN, MOX Services

BILL HENNESSY, MOX Services

WAYNE MARQUINO, GEH

TONY PIETRANGELO, NEI

SCOTT SALZMAN, MOX Services

BRIAN STONE, MOX Services

TABLE OF CONTENTS

Opening Remarks
Said Abdel-Khalik, Chairman..... 4
Potential Approaches to Resolve Generic
Safety Issue (GSI)-191, Assessment of
Debris Accumulation on Pressurized Water
Reactor Sump Performance 5
Amendment to the DCD for the Certified Advanced
Boiling Water Reactor 121
Long-Term Core Cooling Approach for the Economic
Simplified Boiling Water Reactor 99
License Application for the MOX Fuel Fabrication
Facility and the Associated Safety
Evaluation Report 171

P-R-O-C-E-E-D-I-N-G-S

(8:29 a.m.)

CHAIRMAN ABDEL-KHALIK: The meeting will now come to order. This is the first day of the 575th meeting of the Subcommittee on Reactor Safeguards.

During today's meeting, the committee will consider the following: 1) Potential approaches to resolve generic safety issue 191 assessment of debris accumulation on pressurized water reactor sump performance; 2) amendment to the design control document for the certified advanced boiling water rector design; 3) long-term cooling approaches for economic simplified boiling water reactor design; 4) license application for the mixed oxide fuel fabrication facility and the associated safety evaluation report; 5) preparation of ACRS reports.

This meeting is being conducted in accordance with the provisions of the Federal Advisory Committee Act. Mr. Tanny Santos is the Designated Federal Official for the initial portion of the meeting.

Portions of the sessions dealing with the amendment to the design control document for the certified ABWR design, the long-term cooling approach for the ESBWR design, and the license application for

the mixed oxide fuel fabrication facility may be closed to protect proprietary and unclassified safeguards information.

We have received no written comments or request for time to make oral statements from members of the public regarding today's sessions. There will be a phone bridge line. To preclude interruption of the meeting, the phone will be placed in a listen-in mode during the presentation and committee discussion.

A transcript of portions of the meeting is being kept and it is requested that the speakers use one of the microphones, identify themselves, and speak with sufficient clarity and volume so that they can be readily heard.

We will now proceed to the first item on the agenda, potential approaches to resolve GSI-919 and Dr. Banerjee will lead us through that discussion. Dr. Banerjee.

MEMBER BANERJEE: Thank you, Mr. Chairman. We will be hearing from the staff actually for about one and a half hours and from NEI for half an hour. So that is not explicitly shown in the agenda but that is the plan.

In any case to give you a little background, we will be hearing about the staff

response which was a policy paper to the Commission's SRM which came out May 17, 2010. The SRM followed an industry briefing to the Commission and as a result, the Commission asked the staff to stay issuance of letters to licensees under 10 C.F.R. 54(f). Right, Mike? Okay. And submit a notation policy paper on potential approaches to bring GSI-191 to closure.

At this point, note that 44 of 69 or thereabouts PWR plants have been proceeding systematically and you can see the sort of light at the end of the tunnel there. Twenty-five plants or there abouts which are high fiber plants are still remaining and it is really with regard to them that options are being explored.

And I am going to just turn it over to Mike to take it on from there and stay roughly within time, if you can, because this can go on forever.

MR. SCOTT: We will do everything within our control to stay on time.

MEMBER POWERS: That was not the charter.

MR. SCOTT: Thank you, Dr. Banerjee. We are pleased to be presenting this subject today as we did to the subcommittee, the Thermal Hydraulic Subcommittee two days ago.

Just to clarify one remark that you made,

I think that it would be accurate to say that all of the licensees are proceeding methodically to try to get through this issue. As we all know, those of us who have been involved with it, it has been an extraordinarily challenging issue, both for the higher fiber plants and for the less challenged plants. But it has been challenging for all, including the in-vessel effects issue, which is still out there.

So they are all being methodical about it but we are down to mostly roughly one-third of all the PWRs who are most challenged by this issue, for reasons that we will briefly talk about today.

And Chris Hott who is with me today will be making the presentation. Chris is in the Division of Safety Systems and is responsible, has been responsible for the development of the SECY paper, which I believe you have all, hopefully, had a chance to read and which is the subject of our presentation today.

So, Chris, over to you. Let's begin.

MR. HOTT: All right. Thanks. Good morning. As Mike said, I am Chris Hott and today we want to provide background information on the SECY paper. We will give a status update on GSI-191 activities, discuss stakeholder views. We will brief

you on the approach used by the staff to respond to the May 17th SRM and will provide the rationale for the staff's recommendation in the SECY paper.

As most of us know here, GSI-191 focuses on reasonable assurance that long-term core cooling will be maintained in the presence of debris in the containment sump following a loss-of-coolant accident. Generic Letter 2004-02 requested licensees look into whether their sumps would clog if a LOCA were to happen and to tell the NRC how they evaluated the issue and whether any plant changes, based on what they found.

The letter requested that if modifications were needed, that they would be completed by the end of 2007. During this time, licensees believed, as did most of us that near-term action to make PWR strainers larger was the prudent thing to do. And as of today, all licensees have increased their strainer sizes by one to two orders of magnitude. However, some aspects of the issue, things such as order of debris arrival and thin-bed effect have been found to be more significant than initially thought, which called into question the assumption that large strainers would always be enough to address the issue.

The current status as of today, 33 plants

of 69 have performed analysis and evaluation using methods acceptable to the staff and 13 more plants currently plan to do the same. That gives us a total of 46 of 69 PWRs that have settled all test and evaluation questions for sump clogging.

Most of the remaining 23 plants have relatively large amounts of fibrous insulation and as such, credited refinements the staff generally has not accepted to main areas or in ZOI and settling credit.

MEMBER CORRADINI: You may have mentioned this on Tuesday but I was listening on the phone so maybe I missed it. So the BWRs from the standpoint of this issue resolution are acceptable not in-vessel but for some strainers.

MR. SCOTT: I would say it slightly differently. GSI-191 pertains only to PWRs.

MEMBER CORRADINI: Okay.

MR. SCOTT: There was a question of the impact of debris on BWR ECCS strainers, which was resolved back in the 1990s.

MEMBER CORRADINI: That is what I remember.

MR. SCOTT: But a lot of water under the bridge since then and we have learned a lot as we have gone through the PWR issues. And so we have asked the

industry, the BWR side of the house to revisit the analyses that were done for the BWRs to see whether it would be appropriate to revisit that issue. And the BWR owner's group is proactively evaluating the issues and we kicked off last month a series of monthly meetings to discuss the issue with them.

MEMBER CORRADINI: And there is a reevaluation going on now.

MR. SCOTT: That is correct.

MEMBER CORRADINI: Okay.

MEMBER BANERJEE: And it is part of the SRM issue. In a sense they need to be informed about what is happening.

MR. SCOTT: Correct but that is the only impact of it on the SRM and it is not addressing the SECY.

MEMBER CORRADINI: Thank you. Thank you very much.

MEMBER BANERJEE: No, it is not addressing the SECY.

MR. HOTT: So --

MEMBER SHACK: Excuse me. When you say fibrous insulation, is that a mix of CalSil and NUKON type stuff? I'm sure there is a mix of everything but lots of those are CalSil plants still?

MR. SCOTT: Some plants. I don't know if I would characterize it as a lot but there are some plants out there that have CalSil. This is an extremely plant-specific issue. There are different types of fibrous insulation out there. There are some that are even difficult to characterize as either fibrous or particulate because they are mix of both. It is just there is a wide variety.

MEMBER ARMIJO: What is the range, the mass in these remaining plants, hundreds of pounds to up to thousands of pounds? Just a scale.

MR. SCOTT: I guess I would be reluctant to speculate. If John Lehning is here, perhaps he might have an estimate for this.

MR. LEHNING: This is John Lehning from the staff. It could be thousands of pounds.

MR. SCOTT: Okay. A lot.

MEMBER BANERJEE: John can you give us roughly a range in the remaining plants?

MR. LEHNING: I can't give you a range off the top of my head. I can say some of the remaining plants, some of the ones we call high fiber, they could be thousands, like a thousand or more cubic feet or several thousand pounds of fiberglass. And then, you know, hundreds or thousands of pounds of

particulate types of coating or other things like that as well.

MEMBER CORRADINI: So this deviates a bit but I remember on Tuesday there was a question about the proper attribute to quote. So is mass the proper attribute? Is volume the attribute?

If somebody were to say I am concerned about this sort of insulation because it has these attributes, what are those attributes?

MR. SCOTT: Well we don't address the issue in terms of the amount of the material they have. If they have just, you know, thousands of pounds or thousands of cubic feet or whatever of this material in this containment but they can demonstrate that through the analyses that we have accepted, that their strainer performs acceptably, then that is fine.

So we really don't go there. We go in terms of it is sort of performance-based. If you use the analyses and you run a test that shows that your strainer passes adequate flow, then you are okay.

MEMBER CORRADINI: Okay. All right. So you are saying only if something occurs -- I remember before you had shown us a decision matrix, as I pass through this decision matrix, if I get to a point where I might have to be concerned, then you start

looking at these attributes.

MR. SCOTT: You consider where you might get a break, find the worst case, run a strainer test and, of course, this can't be done in the plant. You run a strainer test in a remote facility, in a vendor facility, and see what your head loss is. And if you have adequate head loss, you know, not excessive head loss, then you have shown acceptable performance. If not, then you may have to make some type of plant modification, either replace some of that problematic insulation with some less problematic material or make some other modification.

MEMBER CORRADINI: You have answered my question. Thank you.

MR. SCOTT: Okay.

MEMBER CORRADINI: Thank you very much.

MEMBER BANERJEE: It could be protecting the insulation as well.

MEMBER CORRADINI: Well the only reason I asked it was you guys are starting to ask about mass and then somebody quotes volume. I am not sure what I should worry about relative to the attribute.

MR. SCOTT: I would suggest you wouldn't need to worry about it either way. It is the end result that is important.

MEMBER CORRADINI: Thank you.

MR. HOTT: The last part of this slide talks about new industry efforts to credit settling and ZOI reductions that the staff plans to evaluate and the bullet right above that notes that the staff has accepted refinements in certain areas where we are technically justified. One example is in debris erosion.

Early in 2010 the staff determined that refinements in critical areas like zone of influence and settling credit were not likely to be successful in the near term. So as Dr. Banerjee highlighted, the staff was a path to issue 50.54(f) letters.

In that April 15 Commission brief, the industry --

MEMBER BANERJEE: Could I add a little something to this?

MR. HOTT: Yes.

MEMBER BANERJEE: The reason that changing things like the zone of influence and so on is so difficult is that the ACRS, for example, went through an extensive review of this back in 2003 and looked at all the tests that were done and Professors Wallis and Ransom wrote extensive notes on these. They came to the conclusion on the basis of all the testing,

including MARVIKIN and all this stuff, that in some cases it was conservative, in some cases it wasn't necessarily conservative, the model.

So in fact, we sort of have implicitly accepted this model as bringing some regulatory certainty but it is neither conservative nor non-conservative. And ACRS has never really said it one way or the other, except to point out some of the difficulties.

So to try to change this is really swimming uphill and it is not going to be very easy. And that is why I think the staff correctly has sort of been a little skeptical about these efforts, which would drag on for 15 years before something comes out of it.

MEMBER CORRADINI: So can I ask you a question about that, since you brought up that?

With the pulling back of ANIS standard 58.2, does that change what you just said?

MEMBER BANERJEE: I don't think so. I think that is for the staff to say but if the staff accepted methodology --

MEMBER CORRADINI: Okay, fine.

MEMBER BANERJEE: -- whether it is in a standard or not I think is irrelevant as far as we are

concerned. But that I think Mike can comment on.

MR. SCOTT: We understand that that standard was not pulled back for lack of merit. It was pulled back administratively. I think you had asked that question and we sent you what information we had on it. And we did not find that particular circumstance to be of concern.

MEMBER CORRADINI: Well I mean from a technical standpoint, the reason I ask it like that is my understanding for the 58.2 was that it did not take into effect initial shock loading and dynamic effects. But my understanding the paper, the stuff you had sent us from Dr. Wallis and Dr. Ransom did, relative to this, I thought.

MEMBER BANERJEE: Well Vic Ransom pointed out that the blast wave was not considered. But you know, in some sense we went with the ZOI model even without the blast wave. After all, to set up a blast wave you really have to have an instantaneous double-ended guillotine rupture or an instantaneous rupture.

So leaving out the blast wave may not be such a big deal.

MR. SCOTT: The other thing was that the recent unsuccessful effort by the owners group to justify reduced ZOI did elicit questions from the

staff regarding blast wave. And so we have evaluated that issue and it ended up being considered resolved. Now we did not accept the reductions for a number of other reasons, which are documented in a letter that we sent to the owners group that I think you all have a copy of. So we have considered that impact.

But we agree with what you said, Dr. Banerjee, that we are not convinced one way or another that there is a lot of gain to be had here in reducing and justifying reduction in ZOI. The last effort did not work out. The industry wants to try another. We are willing to evaluate it but we are not at all able to say that we think at this point that it is likely to succeed.

MEMBER CORRADINI: Okay, thank you.

MR. HOTT: As I was saying, in the April 15th Commission brief, the industry expressed concerns that the staff path for closure GSI-191 would yield little safety benefit and a large radiation exposure to workers. The industry highlighted their preferred path was to use leak-before-break credit for sump evaluations.

We also heard form the Union of Concerned Scientists that sent us two letters. The first one said that they felt the staff was on track to

successful issue closeout by not allowing leak-before-break credit and the second letter said that they could support use of LBB credit under certain circumstances, as long as leak detection systems could be guaranteed to be reliable and that none of the changes for GSI-191 would impact those leak detection systems.

As already covered following the April 15th Commission meeting, the Commission issued an SRM. A number of requirements for the staff to consider are listed on this slide. In response to the SRM, the staff took a comprehensive look at the issue and we are here to brief you on a recommended path forward.

Okay, we just mentioned before that the industry position was that there was little safety benefit for additional changes for GSI-191. Part of that is due to LOCAs being low probability, especially larger breaks. However, some clogging is a high consequence event and the inability of sumps to pass adequate flow would likely lead to core damage and the loss of the containment spray system, which is a mitigation feature.

We have also seen that a small amount of the right materials can cause clogging. LOCAs as small as three inches have been determined to generate

enough debris to cause a challenge to some performance --

MR. SCOTT: At some plants.

MR. HOTT: -- at some plants.

These make the uncertainties in sump performance significant for high fiber plants that do not have a defensible strainer test and the staff believes it is not prudent to allow uncertainties to continue indefinitely.

A source of uncertainty exists due to the lack of realistic models in areas that can have large impacts on sump performance, such as debris generation and debris transport. The staff has a potion that the current models used to analyze GSI-191 are conservative, though not overly so. Industry, however, believes the models are overly conservative and as such, some licensees have tried to justify refinements to those models.

MEMBER BANERJEE: Let me also make a little comment on the last bullet that you have in the previous slide which is the debris settlement business. At the moment, correct me Mike if I am wrong, but the staff essentially requires most of the fine debris, fine particles and fibers to be suspended in the tests. And that also agrees with

what we feel in that the scale effects are very, very difficult to model because the Reynolds numbers in the plant are very high, so you have very high degrees of turbulence which, in a narrow flume or something is difficult to reproduce. So we have always felt strongly that the staff position was defensible because it took a high turbulence sort of limit.

In a flume, of course, you can make it quite low turbulence. Therefore, you can get settling. You may not get that in the plant. And that is really the issue that I don't know how you can deal with because it is not easy to scale turbulence unless you have the sort of dimensions of a plant.

So the staff position, I think, has been pretty defensible, maybe a bounding position but it is a defensible position.

MR. SCOTT: I think you have summarized our concerns very well on that, Dr. Banerjee. This has been attempted, this settlement credit. We have discussed it with the vendor that has attempted to credit it for a matter of years. We are still discussing it with them.

We had reached a conclusion that there was not likely a near-term success path in that area for the reasons you cited and that is what led to the

genesis of the 10 C.F.R. 50.54(f) approach.

We certainly accept that there would be some settlement of debris and the heavier or larger pieces are much more likely to settle than are the smaller pieces or are the fines. The trick of course, as you said, is to not overestimate the amount of settlement that would occur.

So the easy way to avoid getting into that is to stir it up and keep the debris in suspension so that the fine debris reaches the strainer but the fine debris turns out to be the most problematic debris for head loss and so the licensees that have a large amount of this material in the plant would like to be able to take credit for settling. And this is a very challenging effort and as we said a few minutes ago for the ZOIs, we can't predict its success at this point but discussions are ongoing.

MR. HOTT: In response to industry estimates provided during the April 15th Commission meeting as seen in this first bullet, a maximum of 600 rem and an average 200 rem to replace all fibrous insulation. The staff went out to obtain data samples, limited data samples, from some licensees known to have performed insulation change outs. It is also worth noting that some of these estimates are

being, I guess, modified as time goes on to better estimate what those actual doses would be. We heard from one plant two days ago that a 200 rem number is now more likely to be around 80 rem for a full scale replacement.

Now our limited survey indicates that while the expected doses would still be significant, five to 44 rem for the doses that were actually received, we think that those doses are not out of line with the safety benefit to be gained by closing the issue. And it is in keeping with exposures experienced for other larger scope maintenance activities inside containment.

MEMBER BANERJEE: Is it in line with say upper head and steam generator replacements or are they on the --

MR. HOTT: Yes. Steam generator replacement, I think we have seen, typically anywhere from 40 to 60 rem per steam generator.

CHAIRMAN ABDEL-KHALIK: How much? I'm sorry.

MR. HOTT: Forty to sixty.

MEMBER STETKAR: Per steam generator you said?

MR. HOTT: Per steam generator.

MEMBER STETKAR: So for a loop plant would be, --

MR. HOTT: Could be up to 200.

MEMBER STETKAR: -- 150 to 200.

MEMBER CORRADINI: And from Tuesday I seem to remember that there was a question about you had data on partial removal but not total removal. And so the estimate you just said is kind of extrapolating what is seen for partial change out.

MR. SCOTT: That's accurate.

MEMBER CORRADINI: Okay.

MEMBER RYAN: I did a little bit of an analysis on some of the data that was in our background information. It is about 55 rem per thousand linear feet of material moved. And that is within a factor of about two of the very small data set we had. So, that seemed to me to be somewhere as a reasonable metric to kind of estimate. I would urge that we think about how do we get a metric that will help us --

MR. SCOTT: That's a good idea.

MEMBER RYAN: -- gauge that a little bit. You know, that is in contrast to the very high numbers we saw from some of the industry estimates up to 600 rem. I just didn't see that supported by the

data to date. There may be other plants that will be higher but I would think that it will be helpful to have a metric that people could use. And again, with some error analysis in it as well but to really get at what is the actual best estimate dose at this point.

MR. SCOTT: I would like to go back, if I might, just to this last bullet on slide nine that Chris didn't heavily emphasize.

We need to be careful not to have this entire discussion in terms of we have got to take all the insulation out. All the fiber has got to go because first of all, there are a number of examples of plants that have shown success in this issue without removing it all. And we don't think the licensees necessarily need to take that approach to assume they are going to take it all out. What we call it is test for success. Run your test with the amount of debris you have, the insulation you have in the plant, run your head loss test and see whether you get a successful result. If you don't, then clean up your test facility, model a smaller amount of insulation in your test and run it again. And keep doing that until you get a successful result. So you find out incrementally how much material you need to take out.

So I just would not like the discussion to be solely focused on the worst case, which is we have to take it all out.

MEMBER BANERJEE: And you can protect it as well.

MR. SCOTT: There is the possibility of banding the material, rather than removing it, which would reduce, though not eliminate the issue of dose.

MR. HOTT: Right. And some of that material might not be located within a zone of influence for the worst break location, so it would also not need to be removed in that case.

This slide following our meeting two days ago is a summary of the limited survey with linear feet and doses per plant. It is worth noting this is just for insulation replacements. It doesn't take into account past modifications like increasing some strainers. We do not have that data.

MEMBER BANERJEE: In the --

MR. SCOTT: Nor would that be particularly instructive because a lot of times, the strainers themselves are out in low dose areas.

MEMBER BANERJEE: In the NEI letter, which we will talk to them about, obviously, in addition to the dose estimates, which were the numbers you quote,

they said that if you proceeded to make these insulation modifications, it would double the cost of what has already been spent, including increasing the area of the strainers. Does that number have, as far as the staff is concerned, have you looked at it and is it true?

MR. SCOTT: We have not looked at it.

MEMBER BANERJEE: Because that is explicitly in their letter.

MR. SCOTT: I understand it is in their letter but we have not evaluated the cost of making these changes. If the licensees have evaluated that and determined that that is an accurate number, then as far as I know, it is.

I guess I would doubt that one number fits all for that kind of thing.

MEMBER BANERJEE: Right.

MR. SCOTT: And again, I would go back to the assumption about you have got to take it all out, versus you might really not have to do that. I don't doubt that it is an expensive modification.

MEMBER BANERJEE: Thanks.

MR. HOTT: Excellent. All right so by now most of us are familiar with the three options presented in the SECY paper, two which have sub-

options.

Just to recap, the first option continues the staff's current approach which involves extensive plant-specific interactions, which end in an integrated review of some performance in an attempt to avoid over conservatism and staff determinations.

The sub-options to this first option involve whether the NRC should establish a firm schedule or not. The second option involves a new effort by the staff to provide a risk-informed approach for evaluating the quality potential of larger less-likely LOCAs. And Option 3 would allow leak-before-break credit to sump evaluations.

MEMBER BANERJEE: Now let me ask you about Option 1.b. In some sense that is risk-informed, too. Isn't it?

MR. HOTT: Yes, it is, in the sense that the staff proposes to require a shorter time frame for resolution for the smaller more likely loss of coolant accidents and a larger or a longer time frame for the larger, less likely LOCAs.

MEMBER BANERJEE: So just to clarify. What would be the difference between say Option 1.b and what you call 2.a, which was to increase the guidance that you developed in your Section 6 of the

SE to the NEI report of 2004, where you do allow some sort of risk-informed look at the size of the breaks and things? Can you clarify the difference between those two options or will you do it as you go on?

MR. HOTT: The existing guidance also, that risk informed guidance in Section 6 also applies only to the larger loss of coolant accidents. It was modeled after the version of 50.46a that was being proposed back in 2004 when the staff issued a safety evaluation.

So Option 2.a and 2.b are similar in that they both only apply to the longer or larger break LOCAs which we would be giving a longer time schedule for.

MEMBER BANERJEE: Yes but I am asking in comparison to 1.b what is the difference with 2.a?

MR. SCOTT: Option 1 is intended to focus on the existing issue resolution process, the plant specific process that we have been going through. Left by itself, Option 1 is stay the course that the staff is already on either with or without a deadline. So the sub-options of Option 1 speak to deadlines for the issue resolution process that we already have in place. Option 2 is the risk-informed part of that. You are certainly correct in having different time

frames for small and large breaks, by implication, we are risk-informing Option 1. But Option 1 is plant-specific issue resolution process. Option 2 is risk informing the staff's path forward.

MEMBER BANERJEE: I can see the difference between and I don't want to take the time of the committee but between I can see that with 2.b for example, you have got 50.46a there. And therefore for the larger breaks, you can bring in equipment which is not safety grade or whatever to cope with it, which you could not do it under 1.b.

MR. SCOTT: You could do it under 1.b but using the existing framework that Chris has talked about, a licensee would need an exemption to use that risk approach and they have chosen not to do that.

MEMBER BANERJEE: So I can see the difference between 2.b and 1.b but what I can't see is the difference between 2.a and 1.b. So 2.a is essentially the licensee -- No. It is a serious question because you have another option on the table. Right? And under 2.a, the licensee also has to ask for an exemption rate which they could do under 1.b.

MR. SCOTT: It is a matter of emphasis.

MEMBER BANERJEE: All right.

MR. SCOTT: See, the way we thought about

it and you are correct that there is some parallel there, the way we thought about it, if Option 1 continues the way we are going and it continues the state of licensees have chosen not to go to that risk-informed method that is available to them. So Option 2 says licensees have told us why they haven't done that. And one of the things they recently put on the table was we needed better implementing guidance. So Option 2 would focus if the staff went down that road without going the 50.46a route, then the staff would consider whether additional implementation guidance might be developed to allow licensees to use a method they haven't previously used.

MEMBER BANERJEE: So it is the additional guidance part of it.

MR. SCOTT: I would say that is accurate, yes.

MEMBER BANERJEE: Okay.

CHAIRMAN ABDEL-KHALIK: Now if the amount of debris that ultimately would be acceptable is dictated by downstream effects, then this distinction and risk-informing with regard to the size of the break and timing of response is irrelevant.

MR. SCOTT: I would say that is not necessarily the case because the amount of debris that

is instrument upon the strainer impacts the amount of debris that goes downstream. So if licensees can use -- For example, if they are able to use 50.46a to revise the assumptions of how much debris is generated and transported, and we described this to the subcommittee as a possibility and we don't know it would play out, but were they able to succeed with that, then they could conclude that less gets into the strainer and less gets into the core.

So these issues are all linked, which is why we recommend not trying to extract them and separate them out.

MEMBER BANERJEE: Well, I guess Professor Abdel-Khalik is concerned that there could be a situation where more debris gets to the core if less debris gets to the screen because there could be a filtering effect of having more debris, which prevents some of the fine stuff. So there could be an optimum amount, unfortunately.

MR. SCOTT: You are correct that making your strainer larger or reducing the chance of having a filtering bed could increase the amount of debris going downstream. Again, the possibility is there.

As part of resolving in-vessel effects, the licensees need to evaluate how much gets by the

strainer, which will depend on factors such as those you have sited. And again, it all goes back to we need to resolve these issues simultaneously.

It is true that a plant could conclude that hey, my straining performance has been shown to be adequate and yet they don't pass the criterion for the in-vessel, in which case they are going to have to make modifications as necessary until both are met; the strainer passes adequate flow and the core passes adequate flow. It has all got to be looked at, basically together.

MEMBER ARMIJO: Do we have enough information, experimental information, or analytical information that would allow us to make that determination of what is sufficient with regard to the core or the fuel? You know, it seems if you have large strainers and very little debris, there will not be a filtering bed developed and it will go into the core.

MR. SCOTT: Correct.

MEMBER ARMIJO: And until you know, exactly how each type of fuel performance, you recall can't determine which option to pick, other than remove it all.

MR. SCOTT: Well the option removing it

all, per se, is not here.

MEMBER ARMIJO: I know. I am just saying that is going to be --

MR. SCOTT: But to answer your --

MEMBER ARMIJO: But until you know how much debris, what the lower limit it, then you have got to consider removing it all.

MR. SCOTT: Well the way that plays out, is the industry, the PWR's owner's group has sponsored an extensive testing and evaluation program on in-vessel effects. And they submitted a topical report to us several years ago that has been under evaluation by the staff and by the ACRS. That document and the program that supports it includes testing of the type you are describing. We are near the endpoint on that.

As we mentioned to the subcommittee this week, there is a cross-test and actually the schedule has been moved up. It is now this afternoon. There will be a cross-test to validate whether staff has a concern about whether the two fuel types are exhibiting different behavior which they are because of a design difference or because of testing difference and cross-test is intended to resolve that.

And there are one or two more additional tests scheduled for this month. At the end of that,

then we believe that the owners will have done an adequate testing campaign to provide the information necessary for the licensees to determine whether they are bounded by this testing that was done from an in-vessel effects perspective.

MEMBER CORRADINI: We're going to discuss this later anyway. Right?

MR. SCOTT: We have a brief for the subcommittee on this October 22nd, the Thermal Hydraulic Subcommittee and then a full committee brief in November on this subject, yes.

CHAIRMAN ABDEL-KHALIK: I guess presumably you are providing these options to the Commission.

MR. SCOTT: Right.

CHAIRMAN ABDEL-KHALIK: And in the absence of the information regarding downstream effects, how can the Commission select from Options 1.b and 2?

MR. SCOTT: Well the point I am trying to make is they will have that information. The testing is wrapping up now. I mean, it is not wrapped up as we sit here this morning but within a week or two, I think it will be. And again, unless something surprising, if the cross-test comes up with a surprising result, then we are back to start. Not that we have never had surprising results in GSI-191

before but if the test goes as we expect it will and indicates that there is a design difference between the two fuel types that has led to this problem, I believe the Commission will have that information in front of them. They didn't have it all in the SECY paper but they are going to have it from the staff.

MEMBER ARMIJO: Well there clearly are design differences, different fuel assemblies. All of the different fuel manufacturers have their own design for debris filters for burnout debris --

MR. SCOTT: Right.

MEMBER ARMIJO: -- protecting the fuel. So I would be surprised if there would be some differences. Whether they are server differences --

MR. SCOTT: Order of magnitude.

MEMBER ARMIJO: They are. Okay.

MR. SCOTT: At a certain flow. But then they reduced the flow at our request and the fuel types behaved more similarly. It wasn't an order of magnitude anymore but there is a difference and we will get in detail on October 22nd as to what those differences are.

MEMBER BANERJEE: I think we should move on because --

MR. SCOTT: We're moving.

MR. HOTT: Okay, the staff is recommending a combination of Options 1 and 2, with the risk-informed resolution schedule and we are not recommending Option 3, for reasons we are about to discuss.

General Design Criterion-4 requires system structures and components be protected from the dynamic effects of the LOCA. However, there is an exception in GDC-4 related to LBB credit, leak-before-break. It allows licensees to disregard this design requirement in cases where the probability of rupture is extremely low.

This first bullet comes from the statement of considerations for the rule that inserted that exception and it was intended to credit removing pipe with restraints to allow better inspections. You see the sub-bullet there is LBB enhances safety through the removal of barriers to inspection.

The next bullet here is that the staff position is leak-before-break credit applies to local effects only and not global dynamic effects.

MEMBER BANERJEE: In the document that we have the *Federal Register*, the Commission notes that there was an inconsistency under Issue 3, correct, in their decision on this? I don't have the piece of

paper in front of me but they explicitly note that there is an inconsistency.

MR. HOTT: This is an exception to the requirement to protect it from these dynamic effects. Right.

MEMBER BANERJEE: Right.

MR. HOTT: And the intent that you would only use that exception in cases where it would enhance safety.

MEMBER BANERJEE: Right.

MR. HOTT: The staff notes in this slide there are benefits for allowing leak-before-break credit. It would be reduced cost and dose for industry, due to less insulation change outs for other modifications needed to show compliance.

Plants that are already effectively done would likely regain operational margin by applying leak-before-break credit and it would simplify GSI-191 analysis and staff evaluations of those analyses because for LBB qualified piping, no debris would be assumed to be generated. However, the staff does not believe that these benefits outweigh the costs.

Leak-before-break credit for GSI-191 would decrease safety contrary to the intent of GDC-4, which was to increase safety. While there may be a dose

benefit to not performing additional modifications, the staff believes the doses involved are not out of lie with other voluntary activities undertaken by licensees and that the additional dose should be incurred, if necessary, to resolve the issue.

Leak-before-break credit would allow large amounts of problematic material to stay in containment without being analyzed. And we also know from testing experience that small amounts of the right debris can result in some failure. Additionally, some failure can cause failure of the ECCS system and the containment spray system.

Another issue related with leak-before break credited is associate with welds and Alloy 82/182 material known to be susceptible to primary water stress corrosion cracking. The industry has implemented guidance and programs such as augmented examinations. This is an interim response for evaluating PWSCC and standard review plan 3.6.3 does not permit an act of deprivation mechanism like PWSCC. And so the staff does not believe that expanding the scope of GDC-4 until primary water stress corrosion cracking is fully resolved would be appropriate.

MR. SCOTT: No question, we don't think it would be appropriate to have any issue not resolved

but this is just another example.

MR. HOTT: The last bullet on that previous slide was just to say that there are, you know, not all piping is LBB qualified so licensees would still have to evaluate pipes that were not able to be qualified. And that could be problematic for plants. It might still lead to some modifications, though. Certainly if you are not analyzing the largest pipes in your containment, the scope of those modifications would be less.

Policy considerations for leak-before-break credit for GSI-191, this credit would be inconsistent with defense-in-depth principles because initiating events should not result in core damage in the absence of additional protection system failures, in the absence of any additional failures. A break in LBB piping could result in some clogging and core damage with no protection system failures.

It is also inconsistent with the independence of prevention and mitigation principal because both core cooling and containment spray would be impacted by some clogging.

LBB credit would also be inconsistent with the proposed 10 C.F.R. 50.46a risk-informed rule making for ECCS requirements because licensees would

not need to consider how debris generated from breaks in LBB piping would impact ECCS performance. Therefore, licensees would not be required to successfully mitigate the full spectrum of breaks.

Policy decision to expand GDC-4 to allow credit for GSI-191 would include a Commission decision that the change one, would not result in an unacceptable reduction in defense-in-depth; it is appropriate given there is no perceived safety benefit; and that it would not result in unintended consequences by setting a precedent for the use of LBB for global effect.

Technical basis for expanding GDC-4 in the presence of PWSCC would need to be approved. An application of GDC-4 to GSI-191 would require revising the Statement of Considerations for the rule itself or issuing exemptions.

MR. SCOTT: Just a footnote to add here. This issue of global versus local effects, the industry disagrees with our interpretation of that, as you will hear from NEI, I believe, this morning.

MR. HOTT: To summarize, the staff does not recommend leak-before-break credit for GSI-191 because it would be inconsistent with GDC-4 itself, defense-in-depth principles, and the proposed 50.46a

risk-informed rule making. LBB credit for a global effect might seta precedent for other areas of plant design. And PWSCC concerns for LBB piping have not been fully resolved yet.

MEMBER BANERJEE: I am a little puzzled. The Commission says the proposed allows the removal of plant hardware which it is believed negatively affects plant performance, while not affecting emergency core cooling systems containment and environmental qualification of mechanical and electrical equipment. It is a specific safety.

So if you do something that effects the performance of the emergency core cooling system, I don't see where it comes from. They would have to change their policy statement.

MR. SCOTT: You weren't expecting disagreement from us on that, were you?

MEMBER BANERJEE: I'm just saying --

MR. SCOTT: You are in agreement.

MEMBER BANERJEE: Yes, it is explicitly stated.

MR. SCOTT: We agree fully.

MEMBER BANERJEE: It would need a policy change.

MR. SCOTT: Yes and I think that was the

last bullet that Chris had on slide 18. We agree.

MR. HOTT: Okay. Let's see. Are we done with this one? We are on 20 now.

Okay, this slide highlights what a risk-informed resolution of GSI-191 would look like using current staff guidance, which are contained in Reg Guide 1.174. You see here that there are some guidelines here for acceptable delta risk, maintenance of defense-in-depth, safety margins, and a monitoring program.

The second part of the slide notes that application of risk-informed methods is difficult for GSI-191 due to a lack of phenomenological modeling for key aspects of the issue.

Because of uncertainty in the phenomenological models, a realistic of probability of some clogging is not feasible but bounding estimates can be used. As seen here on this slide, medium breaks, based on their initiating event frequency would not satisfy the delta risk criterion in Reg Guide 1.174.

The key point of this slide is that for risk-informed resolution, defense-in-depth philosophy also needs to be met, even if the delta-risk criterion is met. So, for very large breaks where just the

initiating event frequency alone meets the delta risk criterion, you still need to meet defense-in-depth.

Now it would not be met in the case for this issue because of single, the initiating event by itself could lead to core damage and also effect containment spray.

10 C.F.R. 50.46a is the proposed risk-informed effort for the ECCS regulations and it represents the current staff thinking. It defines a transition break size, which is the largest LOCA that has to be analyzed as a design basis accident. Typically, for most plants, that is about 14 inches. It is the largest attached pipe to the main coolant system, the main loop system.

For breaks above the TBS that are no longer design-based accidents, licensees who credit 50.46a if approved can credit offsite power, no single failure, and non-safety equipment. And they also have to perform analysis that they enable changes, have a very small risk impact.

For GSI-191, the proposed 50.46a would provide some flexibility for the largest breaks, mainly in the use of, or the potential use of non-safety systems. There might also be some limited benefit for debris source term. But as Dr. Banerjee

already mentioned and we talked about, it is highly uncertain how much benefit is to be gained in that area.

MEMBER BANERJEE: The first bullet there, under Section 6 with an exemption, can they already do that?

MR. SCOTT: Yes, with an exemption and of course they need to show that it works but yes.

MEMBER BANERJEE: But they would have to show it works here, too.

MR. SCOTT: Right, yes. But I mean, that is not a trivial point because backflush has to be shown to keep the head loss down and also not result in unacceptable downstream effects.

MEMBER BANERJEE: Right.

MR. SCOTT: So it is far from a certainty to say that if we get backflush, even without an exemption being required, that that will result in success for us. It would be a plant-specific demonstration, which would be complex. Because again, you can't test it in the plant so you would have to somehow test it in your vendor facility which, in the past, has led to all kinds of questions.

But what you might gain from this in addition to not having to have an exemption is you can

potentially get some relaxations in the requirements for actually making a demonstration. But how that would pay out is difficult to say.

I imagine that the industry will weigh in when they talk to you this morning about how much value they think this would really be to them. We put it on the table as it is available. We don't have high visibility on this point on how we would work with regard to this second bullet. We have already started thinking about it and we are going to engage the industry and see where that will go. We don't know at this point.

MEMBER CORRADINI: But just to say it another way as I heard on Tuesday, this beyond the transition break size allows for non-safety grade equipment to be used in some manner where prior this could only have been done by exemption.

MR. SCOTT: You are correct.

MEMBER CORRADINI: And that is the key change here, if accepted.

MR. SCOTT: You could use the non-safety system and potentially you could have a less rigorous analysis to show that it works.

MEMBER CORRADINI: Less rigorous, best estimate? I am trying to understand the difference

there. What do you mean by less rigorous?

MR. SCOTT: Right now, when we speak in terms of the amount of debris that is generated and the amount of debris that is transported, because of the lack of realistic models that Chris talked about a few minutes ago, the expectation is that bounding numbers will be used. It is possible that a more best estimate number could be developed. I say possible. We don't know.

MEMBER CORRADINI: Okay. Now I get it. Thank you.

MR. SCOTT: Okay.

CHAIRMAN ABDEL-KHALIK: But a less ambiguous non-safety system perhaps would allow for people to refill the RWST and, therefore, eliminate the need for recirculation altogether.

MR. SCOTT: That of course was evaluated and has been implemented by some plants as an interim compensatory measure. It is not without cost, of course. You would have to evaluate for the impact on containment of continuing to --

CHAIRMAN ABDEL-KHALIK: Dump water into it.

MR. SCOTT: Yes. There is potential there.

MR. HOTT: Additionally, that non-safety system might not need to be redundant because there is also the single.

MEMBER ARMIJO: Could you move back to slide 23? Now by accepting the transition break size, 14-inch pipe or 16, whatever is the largest in a PWR, you basically exempt the big pipes, hot leg and 28-inch pipes. But what about those bigger pipes?

MR. SCOTT: I wouldn't say you exempt them. They fall under the heading of you still have to evaluate the break in those pipes but under these less rigorous criteria. That is the difference between this and the LBB situation.

MEMBER ARMIJO: That is what I was trying to get at. Is there a logic problem between your opposition to LBB and your kind of treating the big pipes as something special that won't break?

MR. SCOTT: I wouldn't say there is. What we are saying, our view is the larger pipes are a smaller risk consideration because of their low probability of occurrence but for the reasons that we have documented here, they largely focus on defense-in-depth. We don't think it is appropriate to just say well, it is not going to happen so I am not going to evaluate it.

We consider okay, it might happen but all breaks must be mitigated and so we are going to address those too. So no, I don't think --

MEMBER ARMIJO: Okay. I just wanted to make sure that they weren't being, basically, taken off the table as a problem.

MR. SCOTT: Not using the 50.46a approach. With LBB, they would be off the table.

MEMBER ARMIJO: No, I understand that.

MR. SCOTT: Now licensees of course could choose to do some type of mitigation but it would be completely outside the regulatory framework for LBB as is currently there.

MEMBER ARMIJO: Okay.

MR. HOTT: The second half of this slide is really just to show that breaks all the way up to the transition break size would still need to be evaluated using traditional methods and might still drive licensees to make some changes. So that is the second part of this slide. Okay, so we are on 25.

The final rule for 50.46a is due to the Commission this December. The staff estimates it will take 12 months to generate implementing guidance as soon as the Commission approves the rule. Licensees must demonstrate that the rule applies to them, that

the guidelines in 1.174 are met and that their leak protection system is adequate.

One important thing to note here at the bottom of this slide is that injection phase models and analyses are not impacted by 50.46a application to GSI-191.

MR. SCOTT: The reason we bring this slide up is there has been a point of view expressed that implementation of 50.46a for this sump issue would be onerous and difficult for licensees. We are trying to make the point here that we don't think it is necessarily going to be all that onerous.

MEMBER CORRADINI: It is voluntary.

MR. SCOTT: It is voluntary, yes. It would be voluntary.

MEMBER CORRADINI: This option would be voluntary.

MR. SCOTT: Right.

MEMBER CORRADINI: Yes, that is what I wanted to understand.

MR. SCOTT: That is true, too.

MEMBER SHACK: I mean, if you had an Option 3,a, which is leak-before-break with mitigation demonstrated, these would be very close. The only real difference would be that, in this case, your

applicability for the underlying basis is a more rigorous treatment under 50.46a, whereas in the Option 3.a it would be leak-before-break.

MEMBER CORRADINI: I don't understand what you just said. I'm sorry.

MEMBER SHACK: Well, I mean, you can look at these things as there are sort of two processes that goes on here. One is to decide which class of pipes you consider and in the 50.46a it was decided that leak-before-break was not a sufficient condition for getting you out of a design basis condition. You have a more rigorous treatment of what is and what is not susceptible. So that is one set of differences, if you just looked at them between 2.a and 3.

One is you demonstrate your specialness by leak-before-break one in a more rigorous process than the other. The other one is that you have a mitigation requirement in 2. You could modify 3 to require mitigation. At that point, it would look an awful lot like 2.

MR. SCOTT: So then you would have to ask yourself, I would think, okay I have this one approach where the NRC staff has worked for a period of about a half dozen years or more to come up with what the right answer looks like. So do we throw that out and

start over?

MEMBER SHACK: I don't know that I need a 50.46 light. I agree. All I am saying is that once you introduce mitigation, these look --

MEMBER CORRADINI: Very similar.

MEMBER SHACK: -- very similar.

MEMBER CORRADINI: I see. Okay.

MEMBER SHACK: So the real question is whether you are going to require a demonstration of mitigation.

CHAIRMAN ABDEL-KHALIK: Except that for the leak-before-break, the transition point is up to the applicant as to which pipe size has been qualified for leak before break.

MEMBER CORRADINI: But what I am just brainstorming, you could use the criteria from 2 to determine the boundary and demand smaller than something is very deterministic and larger.

MR. SCOTT: One more point to make. One of the advantages that the industry has portrayed for case three or LBB is that it would be a fast path to resolution of this issue. The discussion that just occurred leads me to believe it would not be a fast path to resolution.

MEMBER SHACK: Well you still have to come

to agreement on what mitigation is.

MR. SCOTT: Exactly. And I think that would be --

MEMBER SHACK: That would be equally onerous in 2 or 3.a.

MR. SCOTT: Yes, and it is almost like starting over on a 50.46a approach. And I just do not believe that would be a quick resolution of GSI-191.

MR. RULAND: Mr. Chairman, I would like to just add one thought.

CHAIRMAN ABDEL-KHALIK: Yes, sir.

MR. RULAND: The reason -- and this is Bill Ruland from staff. The reason we are recommending 50.46a is because it is the considered opinion of a number of ACRS meetings, of several commissions, staff since 2003 about how to risk inform the ECCS acceptance criteria. Whatever that is, the Commission hasn't approved it and we don't know what the Commission's final decision is going to be on that. But what our collective judgment is is this in fact represents the collective judgment of lots of folks in thinking about how to risk inform the ECCS criteria. And that, fundamentally, that is why we are going this way, rather than kind of a band-aid approach using leak-before-break which, in its time,

was the appropriate thing to do back in the early '80s. But we believe the current 50.46a, as it is currently proposed, is the right way to go and that is why we are recommending.

MR. HOTT: That's a great lead-in, Bill. Thank you.

50.46a represents the current staff thinking on risk-informing ECCS requirements. It would provide flexibility for analyzing larger breaks and would not be overly burdensome for licensees to adopt.

The current rule-making schedule also supports use for GSI-191, though it is dependent upon Commission approval.

MEMBER BANERJEE: So what would this to do closure of this issue? Let's say the Commission approves it, let's assume, within a certain time scale. What is that time scale?

MR. SCOTT: Well that would be, it would be early next year. If we get it up to them in December or next year as is proposed and they take a typical amount of time to review it, then you are looking at spring next year.

So then at that point, and presumably they will have guided us or directed us on how to make all

this work for 191, in terms of wait on that, allow sufficient time for guidance to be developed. So what we would then do is correspond with the affected licensees. And if this approach is used, we basically say it is time with the deterministic evaluation to show compliance for the breaks below the TBS. And so get back with us within X amount of time as to when you are going to do that. And the industry presentation to the subcommittee indicated no disagreement with that point that we need to go ahead and resolve the smaller breaks deterministically. So we would have a schedule for that that would involve discussions with the staff, I would assume, in calendar year 2011, including potential testing by those plants, additional testing using the staff accepted ZOI and settlement or lack of settlement criteria, followed by two cycles to make any changes needed. That is for the small breaks, any plant changes needed.

For the larger breaks, we would probably start a clock in spring 2011 for about one year to allow the implementing guidance to be developed for 50.46a to be used for this purpose and then we would have the same sort of thing as I described a minute ago for small breaks with the potential for an

additional round of testing, maybe, maybe not, and the potential for modifications, maybe, maybe not.

You know, there is a downside to this for the licensees as well and for us, in that it makes the regulatory framework for resolution more complex because we have divided it into two pieces. It would be voluntary for the licensees to go that approach. They could choose to do the whole thing deterministically up front, which of course the 25, some fraction of that 25 had chosen not to do because of the amount of materials they have in the plant and the concerns about what the demonstration would look like. But they could choose to go that route. They could say okay, the staff has said 50.46a is it. If the commission agrees with that, then that is the way the NRC has come down. And so either 50.46a works for us and we will risk-inform or it is not worth the trouble and we will go ahead and do a deterministic evaluation now.

MEMBER BANERJEE: All of this might be purely academic in view of in-vessel effects.

MR. SCOTT: But they will know. My point is, they will know. The testing is happening now to support in-vessel effects.

MEMBER BANERJEE: Right.

MR. SCOTT: They will know how it plays out.

MEMBER BANERJEE: Yes but this would basically extend the schedule by about a year, compared to 1.b. Is that what I am hearing?

MR. SCOTT: I believe that would be accurate, yes.

MEMBER BANERJEE: Compared to 1.b, which also in some sense risk-informs.

MR. SCOTT: Wait a minute. Now I am going to get mixed up again.

MEMBER BANERJEE: It is when you allow easier and more extended treatment of the large breaks.

MR. SCOTT: No. No, it changes the schedule.

MEMBER BANERJEE: The schedule. Yes, that's all.

MR. SCOTT: In either case, in either case we are assuming development of implementation guidance would be -- No. That is just the risk part of it.

MR. RULAND: That is just the risk part of it.

MR. SCOTT: Yes, you are correct.

MEMBER BANERJEE: Extended by the --

MR. RULAND: In 1.b we would be allowing licensees to take advantage of refinements --

MR. SCOTT: Correct.

MR. RULAND: -- and other additional analyses that may reduce the zone of influence. And where for 1.a we are saying let's go with what we have and do a test and take out the insulation or whatever.

MR. SCOTT: But our assumption about that, and you are absolutely correct, Bill, our assumption about 1.b is that to sort out the latest efforts at settlement and ZOI are probably going to take anywhere from a year to a year and a half from right now.

MR. RULAND: Right.

MEMBER SHACK: And you are asking for a design-basis level of rigor for --

MR. SCOTT: Yes.

MEMBER SHACK: -- the settlement and the ZOI --

MR. RULAND: That is correct.

MEMBER SHACK: -- for the 1.b, where you might have a slightly different measure of success under Option 2.

MR. RULAND: Yes.

MR. SCOTT: Perhaps.

MEMBER SHACK: Ah, perhaps.

MEMBER BANERJEE: Perhaps.

MEMBER SHACK: If you can slice the bologna that thin.

MR. SCOTT: That would be interesting.

MR. RULAND: That metaphor breaks down at a certain level.

MEMBER POWERS: I think that level right there is where it breaks down.

MR. RULAND: Yes. But we understand that it is not an easy thing to do.

MEMBER BANERJEE: But you can still, under 1.b or 2.a get exemptions if you want to go ahead and use some of your non-safety grade equipment.

MR. SCOTT: Licensees, of course, could seek exemptions now, could have sought them associated with this issue, but have not. And again, of course the criteria for exemptions are not trivially easy to meet either, which is part of why they probably have not come in with that but they could.

MR. RULAND: Generally for exemptions the Commission and the staff have frowned on use of exemptions generally speaking. However, in some specific cases, we have given them. A schedule of exemptions I think for the latest security rules, where licensees really didn't have any choice, they

really couldn't make those modifications.

So there are, of course, criteria in 50.12, I believe it is, 10 C.F.R. 50.12 for exemptions.

MEMBER BANERJEE: For example, but let's be concrete. Say a licensee wanted to replace a check valve and set it up so that he could do backflushing, let's just say. And they came with an exemption. You would, of course, examine it and this that and the other. But in the end, if it worked, if the backflushing worked, and I am talking about not leading to downstream effects which would be deleterious, then that would probably be a way for them to deal with high fiber plants, which might produce the means to reduce. They could ask for that exemption. Whether they would give it or not is a separate issue.

MR. SCOTT: Yes, the exemption would be focused on the use of a non-safety system that is non-redundant. That sort of thing.

MEMBER BANERJEE: Yes, and you would probably have a higher bar for that than under 50.46a is what you are saying.

MR. SCOTT: It might get to the same place.

MR. SCOTT: I mean, 50.46a removes the need for the exemption.

MEMBER BANERJEE: Yes.

MR. SCOTT: Now, if somebody came in with, let's just say that 50.46a did not exist, and somebody came in with an exemption request that closely parallels what 50.46a gives them, as Bill Ruland said, that 50.46a represents the current staff thinking about what is appropriate for a risk-informing ECCS. So I mean, they already have a foot in the door with that. So, they might well succeed with it. We have to look at the specifics of what would be applied for.

MEMBER BANERJEE: All right. I think we will carry on.

MR. SCOTT: Okay.

MR. HOTT: This slide is for in-vessel effects. And the staff conclusion is that in-vessel effects should not be separated from a resolution of GSI-191. I think we discussed the time frames noted on this slide.

MEMBER BANERJEE: I am a little concerned about this cross test. Maybe you can clarify this.

Even if the cross test shows, let's say, that -- Let's say in the cross test both vendors on this equipment that is being used to do the test have

similar behavior, it is still an issue as to why the other piece of equipment or the test grid showed such a difference.

MR. SCOTT: You have very well described, from our perspective, the worst-case outcome of the cross test. Remember that what we are talking about here is one vendor's fuel in their own test rig showed a factor of ten greater propensity to clog than did the other one.

So we reviewed extensively and observed the testing. We reviewed the test procedure. We looked at the test rigs at the two vendors, found them to be substantially identical and could not attribute the difference in observed behavior to a test difference between the two test facilities.

However, wanting a larger degree of assurance because of our past track record with GSI-191 of unexpected results, the staff has requested and, after due deliberation, the industry has agreed to perform a cross test where they are taking today, this afternoon, they are taking an AREVA test assembly, putting it in the Westinghouse facility and running the same kind of test that Westinghouse ran on Westinghouse's fuel.

So the industry's view and it is also the

staff's view, is that in all likelihood, the difference in behavior is in fact due to a design difference. In one case the debris tends to accumulate on the first grid. In the other case, it tends to distribute over more grids, which then results in not as impervious a bed.

So the expectation is that the cross test will show that the AREVA fuel behaves in the Westinghouse facility as it did in the AREVA facility. That is a good result from the standpoint of certainty in moving on on this issue.

If on the other hand, the AREVA fuel behaves more like the Westinghouse fuel and Westinghouse facility, which is what you referred to, we are back to start from the perspective that we would not understand why that had occurred. We would have to figure it out.

MEMBER ARMIJO: Mike, just on the issue of those tests, whether it is in the AREVA loops or the Westinghouse loops, how reproducible are these tests? You know, just do the same test over two or three times. Do you get a lot of variability in either of these test loops? You know, do you have a test variability problem as opposed to a real design difference?

MR. SCOTT: We have not observed a variability problem. There is, of course, always variability.

MEMBER ARMIJO: Yes, but -- I know this is complicated.

MR. SCOTT: There have been a significant number of tests and the trend is relatively clear.

MEMBER ARMIJO: So you are not concerned about reproducibility under identical conditions --

MR. SCOTT: No. No, we are not.

MEMBER ARMIJO: -- in either of these tests.

MR. SCOTT: That is correct. We have asked them to do additional testing to make sure that we can accept the results.

MEMBER BANERJEE: I think we should move on because we need to wrap up in about ten minutes.

MR. HOTT: Recommended approach by the staff provides near-term resolution for more significant smaller LOCAs, while allowing additional time for industry to justify evaluation refinements like zone of influence reductions and settling credit. The staff position is that it is consistent with defense-in-depth philosophy by requiring mitigation for all size breaks and incorporates risk insights,

both in the implementation schedule and the analysis of larger, less-likely LOCAs.

The staff would continue the holistic review process that has been successful for about two-thirds of all PWRs, which the balance has known conservatisms against uncertainties to avoid over-conservatism.

The implementation schedule also takes into account the amount of effort and planning necessary for licensees to plan and execute additional modifications, if needed, using ALARA methods to reduce radiation exposures.

The staff recommends continuing the integrated review process for remaining plants and setting a near-term resolution schedule for smaller LOCAs and a longer-term resolution schedule for larger LOCAs. The staff would revisit risk tools for evaluating larger breaks consistent with the longer schedule.

Staff thinks in-vessel effects should be resolved as part of GSI-191 and the staff does not recommend expanding leak-before-break credit. Thank you.

MR. SCOTT: I would like to insert one comment here that was occasioned by Dr. Banerjee's

comment about cost. We did get direction from the Commission to go back to the CRGR, Committee to Review Generic Requirements, to revisit whether the various exceptions to the backfit rule continue to apply, which is, of course, occasioned by cost considerations, among other things. And the CRGR concluded that the staff can and should proceed on this issue, using the compliance exception to the backfit rule, which means that we are not doing a detailed cost-benefit analysis to support this issue resolution because it is a compliance issue and is a compliance issue with an important safety-related rule. So that is why we haven't gone down the cost route.

MEMBER BANERJEE: Okay, that is fair enough. And that was in the SRM.

MR. SCOTT: It was in the SRM to do it and it is addressed in the SECY paper.

MEMBER BANERJEE: Yes. Okay, I think if the Committee has any further questions, we have until 10:30. So now we are going to have NEI.

MR. RULAND: I'm sorry, Mr. Chairman,

MEMBER BANERJEE: Yes.

MR. RULAND: Could I just make one final comment?

MEMBER BANERJEE: Go ahead.

MR. RULAND: We appreciate the Committee's really long-standing comments about this issue. This has been a long, arduous path to approach resolution of this matter and I just wanted to acknowledge both the Committee's interest in this matter and, frankly, I want to acknowledge the cooperation, really, we have had with the long technical discussions with both licensees and NEI.

While we disagree about how this ought to be resolved, both parties want to see this resolved in as timely a manner as possible. So, we really have had extraordinary cooperation from the industry. If you think about the long phone calls that really the multi-million dollar modifications licensees have done, with really no what I would say overt regulatory pushback. They have really debated us and talked to us, really on a technical level. And really the cooperation we have had, in spite of our disagreements has been extraordinary. So I just wanted to acknowledge that. Thank you.

MEMBER BANERJEE: Thank you, Bill and thanks, Mike and Chris for a very illuminating presentation. You will be sticking around.

So now I would like to invite John Butler

from NEI to present the NEI options to us and their views on this. John are you around?

MR. BUTLER: Yes.

MEMBER BANERJEE: You are going to make the presentation and --

MR. BUTLER: Tony's going to make a couple of introductory remarks.

MEMBER BANERJEE: Do we have STP today as well or not?

MR. BUTLER: No.

MEMBER BANERJEE: Okay.

MR. PIETRANGELO: Well good morning. Some of you were actually on the committee when we started working on this issue. I think Dr. Bonaca down here and Dana and --

MEMBER POWERS: Why is it Dr. Bonaca instead of Dana?

MR. PIETRANGELO: Dr. Powers.

We have been working on this as an industry for a long time. This is not just an NEI presentation. This is an industry presentation. Make no mistake about that.

John has been the project manager on this since inception. I really appreciate Bill Ruland's remarks. This has been an effort where there has been

a great deal of coordination and interchange between the industry and the staff, PWR owners groups, the individual utilities.

The reason I wanted to come and say a few remarks here is we are down to decision points with this issue that are very important, okay, and just to provide kind of an overall perspective on this.

Major mods have been made to each facility, each PWR in the United states, beyond just enlarging the strainers. There has been operational changes. There has been other hardware changes for downstream effects on valves. There has been buffer changes and there has been mitigative actions put in place to address this issue, that were not mentioned in the application of LBB before.

So a lot has been done on this already. And now we are at a point where what else do we need to do with this issue. And what I come back to is this issue is a commercial for risk-informed regulation. How long do you want to taste the tails of the distributions on what might happen? Where does reasonable assurance stop an absolute guaranteed start in the probabilistic world? That is the policy question on the table. Do we continue to chase this at the expense of other issues? This is not unlimited

resources that are expended by either the agency or the industry with a focus on safety. I have got to tell you, there is a lot better things we could do with the money that could be used to remove all this insulation and soak up dose than doing that.

So that is where we are at with this issue. I think it has been --

MEMBER POWERS: Let me understand. There is something that you can do that is better than assuring that you don't melt down the core of the plant?

MR. PIETRANGELO: I think there are equipment issues that are always out there and the material condition of the plant. That all contributes to that, Dr. Powers.

MEMBER POWERS: Containment over pressure, credit, something like that.

MR. PIETRANGELO: There are other issues.

MEMBER POWERS: Yes, there are other things to use but this is a non-trivial issue. So let's not downplay the importance of the issue that you are addressing.

MR. PIETRANGELO: And I would assert that our actions demonstrate this as a non-trivial issue over the last seven years.

MEMBER POWERS: Your actions demonstrate that. It is your words I am a little worried about here.

MR. PIETRANGELO: Well I am worried about additional beyond what we have already done, based on what. Okay?

I mean, we knew 25 years ago that the probability of breaks for large pipes was infinitesimally small. That was corroborated through extensive --

MEMBER POWERS: So you are finding here that even 14 inch pipes connected to those large pipes breaking can cause us a headache.

MR. PIETRANGELO: Absolutely and those would still be included. That is why I am saying there is enough conservatism remaining to deal with this issue. Okay? But again, we are going to impose actual dose here. We are going to worry about some postulated dose later. Is that the right thing to do?

Again, where does reasonable assurance end? There are other threats to core damage I would argue, that are much more significant than what we are chasing here with this.

MEMBER POWERS: Well, good. I would like to get that list.

MR. PIETRANGELO: So, I mean, that is the perspective I want to provide. It is not that -- We have cooperated with the staff. There have been disagreements on the levels of conservatism and the assumptions in the analysis and the testing we have done. Okay?

But at what point? I mean, we would recommend all three of the options. You should risk-inform not only the time it takes, focus on the small breaks first but I think Dr. Shack pointed out there is not much difference between Option 3 and Option 2.a, except for the mitigation piece. It is founded on the same --

MEMBER SHACK: That is my question to you. I mean, do you find it acceptable not to be able to mitigate a large break? You know, design basis aside, to me the real question is as we do 50.46a as Bill was pointing out, the whole concern all along has been how much assurance of mitigation do we provide for that largest break, even if we make it a non-design basis accident.

And I look at Option 3 as the way the staff has presented it and the way you have presented it, as a no-mitigation option. And if you do introduce mitigation with some confidence, then it

looks an awful lot like Option 2 and, you know, why do I need to make --

MR. PIETRANGELO: You are absolutely right.

MEMBER SHACK: -- a different set?

MR. PIETRANGELO: Yes, so --

MEMBER SHACK: So I mean, all to me the objections to GD application GDC-4 and adoption of 50.46a make any sense. Of course they are almost exactly the same thing and they are based on the same risk insights.

MEMBER CORRADINI: But then just to get back to his question, so you do support Option, I get all these options mixed up, --

MEMBER SHACK: 2.b.

MEMBER CORRADINI: You do support applying GDC-4 with mitigation.

MR. PIETRANGELO: You could. In fact, you could look at the analyses --

MEMBER CORRADINI: Not could. You do support or don't support. It's a yes or no here.

MEMBER SHACK: Yes. Do we look for a reasonable assurance of a capability to mitigate large breaks under your version of Option 3 --

MEMBER BLEY: Or do we just say they are

so unlikely we don't worry about it?

MEMBER CORRADINI: Right. That is what, I guess, we are trying to understand.

MR. BUTLER: I will say we agree but the qualifier I will add is what do we mean by demonstrating mitigation capability. And when we get into the discussion of 50.46a and what it means in that context, I will point out the problem we see with 50.46a and the difficulty in doing that.

We have no problem with the concept of demonstrating mitigation capability. How do you do that in the context of 50.46a? How do you do that in the context of GDC-4 and LBB is what needs to be discussed.

MEMBER CORRADINI: Okay. That's fine.

MR. PIETRANGELO: Why don't we let John do the specifics and then we can come back to this at the end.

MR. BUTLER: All right. Thank you. My name is John Butler of NEI. I gave a little bit longer version of this presentation to the subcommittee and I am going to try my best to abbreviate. So I have cut out a number of slides, a number of points that I felt were necessary for the subcommittee. It would have been nice to have given a

longer version here but time is what it is.

This slides shows the three options that are presented in the SECY paper. I will not go through those in any kind of detail. I am presuming that everybody is fully aware of those.

The staff recommendation in the SECY paper was, in sort, Option 1.b in combination with Option 2. I think the key point on this slide is that the industry recommendation is generally in line with that, in that we recommend Option 1.b in combination with either Options 2 or Options 3. We feel it is appropriate to bring the risk-informed options, make them all available to plants to use. And I will get into this in a little bit more detail but which option a particular licensee chooses will vary. There are particular drivers for using 50.46a for a particular licensee that are unrelated to GSI-191.

Use of Option 3 LBB may be of particular interest to someone who has already closed the issue but feels that their margin, because of the way that they have, what they have had to do to close this issue, the operability margin is somewhat compressed and they would like a way to kind of regain some of that margin.

So there are pluses and minuses to each of

these options. So in general, I think all the options should be pursued and I will get through what I see as some of the concerns that we have with some of the options that are being proposed by the staff.

MEMBER ARMIJO: John, as you go through this thing, would you try and explain exactly how you would use or propose to use Option 3? Because since you are in agreement with the staff on Option 1.b and Option 2 at the top level but where the difference is is the industry's view that Option 3 is, you know, bad. I would like to know exactly what you would propose to do.

MR. BUTLER: All right. Well, let me pan Option 2 first, before I --

MEMBER ARMIJO: Okay.

MR. BUTLER: So again, we recommend Options 1.b in combination with the risk-informed options, which are both Options 2 and Options 3.

I will emphasize this. We agree with the staff in that the more likely spectrum of breaks, the small breaks, but it is really small and medium breaks and some large breaks, should be met using the deterministic criteria that the staff finds acceptable.

The one qualifier I will add to that is

the schedule for doing that should try to accommodate some of the ongoing activities, which include the in-vessel effects testing and some credit and strainer testing and refined ZOI values, if it can. You know, but the intent is these are ongoing test programs that would benefit the activities to demonstrate compliance for the smaller breaks.

Now the risk-informed options, we think they all should be pursued. The advantages and disadvantages of each of the options vary and I will get into that in a little bit of detail.

Option 2.a which was an expansion of the Section 6 guidance IN 04-07 share some of the disadvantages we see with 50.46a in that it is difficult to define what relaxations you would be allowed to employ beyond what you are required to do for the small breaks.

I have characterized it as unless you can have separation in your analysis methods for the larger breaks from what you apply to the smaller breaks, there is really no advantage to pursuing that option.

Section 6, without an exemption really relies upon using some relaxation on the criteria of the methods. Primarily right now, that is limited to

more realistic treatment of MPSH calculations. There is really no reduction in how you treat any of the debris generation transport, strainer testing, downstream effects. There is no relaxation in those areas to speak of.

So that is why the industry hasn't pursued this because the lack of that relaxation and the difficulty, perceived difficulty in applying any kind of exemptions to the current regulations.

CHAIRMAN ABDEL-KHALIK: But that may not be the same for 50.46a.

MR. PIETRANGELO: Yes, it would.

MR. BUTLER: It would. It would. And this is not the staff's fault but the difficulty we have with any kind of relaxation on the methods is you really should have some basis to quantify what that relaxation should be. And at present, all the testing and evaluations have been done on a bounding set of conditions to support the deterministic methods.

So you know what that bounding set of conditions and phenomena give you, the level of conservatism will continue to be argued between the industry and the NRC but it is agreed that is a conservative bounding set of conditions. Now when you relax that, how do you quantify what that relaxation

should be, without a lot of additional testing and research?

So you know, --

MEMBER BANERJEE: The problem you are facing is there is no best estimate --

MR. BUTLER: Correct.

MEMBER BANERJEE: -- method here. Because the phenomena are complex and we stopped doing research quite a long time ago.

MR. BUTLER: Right. And it is more than, you know, you are trying to bound a range of designs out there. Even within a particular design, you are trying to bound a range of potential conditions and you are trying to bound a time scale where you are trying to compress it down to a single test and you are trying to avoid performing dozens of tests because these are expensive tests. So you again bound a range of conditions.

So we have imposed upon ourselves in the testing a level of conservatism that could be relaxed if you were to go back and do a lot more testing. But we are where we are.

MEMBER CORRADINI: I appreciate what you are saying but I guess I am still back with Sanjoy. If you don't have a good way to at least attack a best

estimate, then all you can do is look at the bound and by either a combination of analysis with experiment or just pure empirical experimentation, reduce that bound.

So jumping to Option 3 doesn't get you anything, other than saying I can't do it so I want this approach out. And I don't see how that benefits safety. That is where I am struggling with what I heard by phone conference on Tuesday.

MR. BUTLER: When we get to the discussion of Option 3, I will hopefully address that point.

MEMBER BANERJEE: Isn't in any case sort of thing that we do for say loss of coolant accidents for the clad temperatures where we have best estimate methods of uncertainty. This is also a very complex phenomena. It takes 20, 25 years to reach that point but we reached that point.

MEMBER CORRADINI: And one hell of a lot of experimentation.

MEMBER BANERJEE: Yes but we are there. So it can be done but it just takes a lot of work.

MR. BUTLER: Right. I think I covered this. I mean, part of the difficulty with Section 6, if we were trying to use it, it would be an attempt to, I guess, provide a little bit more refinement of

it or maybe even try to provide that separation that we are looking for but it will take time and I am skeptical of how successful we will be in actually getting the true separation in the criteria.

I am going to be truthful. We like 50.46a but it was developed from the start to be applied to in-vessel traditional LOCA analysis. That is where you get the benefit. That is where the value for this comes from. It was never looked at as a means to risk-inform the long-term cooling criteria of 50.46. So there are difficulties in trying to force fit its application to resolve GSI-191. It was not intended there. The benefit you get in applying to it just a GSI-191 we see as somewhat problematic.

However, there are values with 50.46a in the broader sense for 50.46. Plants who see that value may have a desire to pursue it broadly and apply it to GSI-191 as part of their overall application of 50.46a.

MEMBER BLEY: What do you think might have been different in the way it evolved if it had originally been aimed at GSI-191?

MR. BUTLER: If it had specifically been aimed at GSI-191? I don't know.

MEMBER BLEY: I don't either. That is why

I am a little stuck with where you started on this one.

MR. BUTLER: The acceptance criteria we are trying to meet is demonstrated long-term cooling. That is a performance-based criteria. It would be in how you meet that or how you demonstrate that criterion but specifically what that would mean in terms of regulations it is hard to say.

The other point here is that there is an uncertainty in how long it would take to develop the implementation guidance for 50.46a in general. And the specific GSI-191 guidance, that is going to take some time. I am not as optimistic as the staff in the schedule required to do that.

Option 3, we see this as a means to provide, to address the unlikely breaks in a risk-informed matter that is consistent with the current regulations.

The point raised earlier on reduction in defense-in-depth, there are ways to address that. Plants have performed a number of actions, starting with the response to the Bulletin 2003-01 to provide means to address blockages should it occur that ranges from simple actions of starting to refill their RWST to provide a capability to continue that injection

source, should the recirculation capability be blocked.

Plants have investigated what they have in terms of a backflush capability. And a number of them have a capability to either through a pumped backflush or through a gravity drain from the RWST to put some backflush capability on their strainers. The difficulty will be in what it means to demonstrate that capability.

What I am fearful of is that in a 50.46a fashion in demonstrating that backflush capability, we will be trying to bound the worst case of the worst case of the worst case. Now I have no doubts that you can lock up a strainer so hard that any backflush capability would fail. How likely it would be to lock it up in that condition is probably infinitesimally small but it is our tendency in GSI-191 to bound all perceived combinations of conditions and that is I am afraid that is where we would go. So the difficulty with demonstrating a backflush capability I see as problematic.

But there is a backflush capability that exists at a number of plants. Those plants that don't have it currently because of a check valve, there are capabilities to modify the design to allow some

backflush capability. But again, my concern is demonstrating that. There needs to be some latitude given to demonstrating that capability or the viability of that capability --

MEMBER CORRADINI: So can I ask --

MR. BUTLER: -- to cover some of the more realistic scenarios.

MEMBER CORRADINI: Can I just go back? So leave that example but you had the example of the RWST. How is that no different than Option 2? Which is I have some sort of break size that is relatively deterministic. Now at larger break sizes, I allow for other actions that would, as Said was suggesting would be that I refill the RWST. So it is in the framework of Option 2 and it is a potential way to mitigate. It is a different way but it still a potential way.

Once, I guess I am back to the way Dr. Shack suggested it. Once you cross that boundary and say if I am going to create latitude but I will mitigate, then they get very fuzzy. So I think all your suggestions with the RWST is fitting within Option 2. That is what I am struggling with.

MR. BUTLER: I guess my concern, main concern with that -- You are right. There is demonstrating litigation capability can come in

different forms and different sizes.

What I am concerned with within the framework of 50.46a I think there is going to be a high bar set on how you demonstrate mitigation capability. It is going to effectively be a design basis analysis for the beyond design basis events.

CHAIRMAN ABDEL-KHALIK: But that is not the intent.

MEMBER BANERJEE: It could be a best estimate for some certainty.

MEMBER CORRADINI: You would just have to, to follow that point, at least my impression was, staff would be totally fine with a best estimate but you would have to show by a combination of experiment analysis that it is a best estimate and know the uncertainty.

MEMBER BANERJEE: Otherwise, what can you do?

MEMBER CORRADINI: Right. I mean, that is -- unless I misunderstand.

MEMBER BANERJEE: There are options.

MEMBER CORRADINI: Unless I am misunderstanding the staff's point.

MR. BUTLER: The measures you would take to provide some mitigation capability are the same

between Options 2 and 3. The difference is probably going to be in that level of rigor that would be required to support it.

CHAIRMAN ABDEL-KHALIK: Wait a minute. Are you now saying that you have sort of gone along with the idea of having mitigation capabilities associated with Option 3?

MR. BUTLER: I have no problem with that, yes. Now how each individual plant --

CHAIRMAN ABDEL-KHALIK: So there is essentially very limited distinction between Option 3.a and Option 2.b, except for the break size at which you would provide these mitigation capabilities.

MR. BUTLER: Well there are a number of differences in how you would apply those two options. Yes, I don't think that you would propose, for example, to put the equipment in the tech specs. You might not agree to the 14 days cumulative. There is a lot more that you --

MEMBER SHACK: I think that is my point is that if you are going to agree to mitigation capabilities in Option 3, then there has to be some set of controls. And again, as we said, we have argued this over for 50.46a for umpteen years. I don't know that we want to reargue it again --

CHAIRMAN ABDEL-KHALIK: For GDC-4.

MEMBER SHACK: -- for, as I say, a 50.46a light just for, you know, some recirculation. You know, if we are going to agree that we are going to have mitigation, then it really ought to look like 50.46a would be my, you know, that is --

MR. BUTLER: Well again, how you demonstrate that mitigation capability or demonstrate the effectiveness is really probably the key distinction between what we are talking about and what Option 3 with some mitigation capability and Option 2.

Currently plants actions they take to refill the RWST, that is all proceduralized. You know, they will follow the procedures. Does it need to be in tech specs? I don't think so. My view would be that having it proceduralized and having the capability demonstrates that they have an ability to implement those procedures under the right conditions is appropriate for this level of risk that we are talking about.

MR. PIETRANGELO: I would also argue that if you accept it will leak before it will break, I would argue that you are bounded by other piping you are going to consider with a spherical ZOI, than you would for that leak from the big breaks, not the 32-

inch double-ended. I think that is the difference. You are bounded by a different set. You either accept it is going to leak before it breaks or you don't.

MEMBER SHACK: But then you are giving up the mitigation for the big break.

MR. PIETRANGELO: No, I am saying we have already taken other actions to mitigate.

MEMBER CORRADINI: What are those?

MR. PIETRANGELO: When you get to that independence versus, the global versus local effect, John has gone through some of the other mitigative strategies we have already put in place that we would like to get credit for in this. It is not like there is no mitigation whatsoever. But I would argue that you are really trying, by risk-informing it, you are trying to focus more on what is more likely to happen that I think would bound the larger piping, if you accept it is going to leak before it breaks. And it could be a pretty big leak and still be bounded by some of that other pipe.

MR. BUTLER: Part of the discussion at this meeting I have avoided --

MEMBER SHACK: By assuming it is going to leak before it breaks, we are not even having this discussion because we are going to shut the plant

down.

MR. PIETRANGELO: Right. We have done leakage monitoring all over the place. We have qualified all the piping. We have enhanced our efforts on PWSCC and we are not getting any credit for it in this issue.

MR. BUTLER: I've avoided in all our discussions getting into the arguments that we have continued to have with staff on the level of conservatism in our methods. I have brought with me but I didn't bring to the table, you know, the stainless steel jacketing that is on the NUKON insulation, ZOIs for NUKON insulation give no credit for the stainless steel jacketing on the insulation. Now the reason for that is, you know, I understand is because you can orient that insulation, that jacketing which is hefty jacketing but you can orient where the seam can be caught by a jet and blown off. But it is, you know, what you are assuming now that all breaks, all seams would be pointed exactly to the jet to where they are all going to be blown off.

You know, my expectation is that that is not going to be the case for any postulated breaks. So there are conservatisms that we know are out there that can't be quantified. So there is a level of

reasonableness that needs to be brought into this at some point as to how you treat the highly unlikely leak-before-breaks. But let me continue.

You know, the staff had five or six slides on why they don't like GDC-4 and I will avoid quoting Shakespeare about protesting too much but you know, the rule is --

MEMBER POWERS: You should never avoid William Shakespeare.

MR. BUTLER: Some key points --

MEMBER BANERJEE: There is also making assurance doubly sure, if you want to quote Shakespeare.

MR. BUTLER: There is no doubt that debris generation is a direct consequence of the local dynamic effect. Now where the staff seemed to point to is that they feel that it is also a global effect or has a global effect. I would point you back to the rule itself and in the statements of consideration of where they specifically identify what are considered local dynamic effects and this qualifies, and specifically identify what they mean by the global phenomenon, global effects that they retain with the rule change. And those are identified as it relates to ECCS, the ECCS flow, you know, capability, heat

removal capability of ECCS for containment pressure at lower pressure temperature, EQ, its humidity. These are identified.

CHAIRMAN ABDEL-KHALIK: This argument of local versus global is, in my view, just a red herring. The main point is whether this is consistent with the intent of GDC-4, which is enhancement of safety.

MR. BUTLER: And I am going to get to that point.

Now the enhancement of safety coming from the GDC-4 rule was that it allowed the removal of the pipe whip restraints impingement shields. In doing so, they allowed that by excluding the local dynamic effects. So the safety benefit came from allowing removal of those materials and allowing increased inspection. They avoided significant worker dose from those inspections and there is a perceived safety benefit from increasing the inspections. All right? That is a safety benefit. It has never been a requirement to demonstrate additional safety benefit in applying GDC-4 rule. That has not been the case in applying it to -- in any case. I mean, it has not been part of the review criteria to demonstrate a safety benefit for an application of the rule. The

safety benefit came from the rule itself that allowed you to exclude those local dynamic effects and remove the pipe whip restraints.

CHAIRMAN ABDEL-KHALIK: With all due respect, that is a lawyer's interpretation of words.

MR. BUTLER: It is the reality. Was there a safety benefit in allowing a plant to exclude local dynamic effects for breaks impinging upon their strainer? I will argue that no there is not a safety benefit. Does it have an impact on ECCS? Yes, it has an impact on ECCS.

But as was pointed out earlier, there is an acknowledged inconsistency in the rule in that it has an effect on ECCS in that you're excluding local dynamic effects which can impact ECCS. That is acknowledged in the rule.

MEMBER SHACK: But that was one of the reasons that it was sort of acceptable is that it was only locally effective. You know, I think the staff's argument is, okay, maybe if you were wrong, you know, and the pipe whip did take out a piece of equipment, it took out a local piece of equipment. In this case when we blocked the sump, it doesn't matter how much more equipment you have got left. You know, you are dog meat.

MR. BUTLER: Okay, the break that directly impinges on the strainer takes out the strainer. A pipe whip that takes out a train of ECCS, and that was one of the scenarios that was considered, it takes out a train of ECCS, the other train is out because of your single failure criterion.

MEMBER SHACK: No, I agree. In a design - basis world, none of this works. We are at a design-basis place.

MR. BUTLER: LBB is applied for in-vessel in-core and so there is a single point, a single failure point there. So it is clearly a point to be argued between the staff and the industry.

So, I guess getting down to the bottom line is has the safety significance of GSI-191 been adequately addressed? We feel that through the design modifications that we have already completed and these are design modifications that have been attempting to meet the full spectrum of breaks and we are just arguing about how well we are doing that, we can clearly agree that for the more likely spectrum of breaks that the deterministic methods should be met.

So we are really getting down for the less likely spectrum of breaks. How do you best close those out in an expedient fashion? We think that

Option 3 provides a way to acknowledge the minimal safety impact of the spectrum of breaks, has the least impact on worker dose, cost and we are willing to consider reasonable ways to address defense-in-depth mitigation measures that can be implemented as part of an Option 3 application.

Thank you.

MEMBER BANERJEE: Thanks. Do we have any questions?

MEMBER ARMIJO: I still don't know with Option 3, is there a pipe size that you would stop at and say okay, we will apply leak-before-break for pipes smaller than the transition break size down to a certain size? You know, I just am trying to figure out exactly how you would use it and why you favor it.

MR. BUTLER: The piping systems that are LBB qualified, you know, they are already LBB qualified so we are not talking about qualifying new piping. For each plant, each plant has a certain set of piping that is qualified to LBB and they go through all the review of that. It varies from plant to plant but generally, all PWRs have their main loop piping qualified as LBB. Some plants have gone further and been able to qualify the pressurizer surge line and RHR piping but that varies, again, from plant to

plant.

MEMBER ARMIJO: Okay and all that piping is bigger than the transition break size. Right?

MR. BUTLER: I think generally we are talking about plants, smallest of LBB piping for most plants doesn't go below 12 inches that I am aware of but generally it is 14 to 16 inches, the smallest piping if they have been able to qualify beyond main loop piping.

MEMBER ARMIJO: Okay.

MEMBER BANERJEE: Do you have any comment on the USC letter which you undoubtedly have a copy of.

MR. BUTLER: The first or second?

MEMBER BANERJEE: Either or both.

MR. BUTLER: The first letter was promoting the staff's previous direction which is involving the 50.54(f) letters. I wasn't in favor of that process so I wasn't in favor of the UCS letter there.

The second USC letter seemed to have some openings for use of LBB provided that there was sufficient leakage protection capability and I can't disagree. And I think generally the plants have adequate leakage detection measures. In fact, there

have been some industry actions to improve those leakage detection methods and applications and applying a PWR owner's group methodology.

MEMBER BANERJEE: One of the letters, I forget which one, they sort of were concerned that plants will not shut down when leaks were detected.

MR. BUTLER: I can't comment. I am not familiar with the specific instances.

MEMBER BANERJEE: Well they gave a couple of instances where plants had, I think, stalagmites, they said hanging from, I forget the exact wording, without being shut down. And therefore, the sort of leak-before-break or whatever the --

MR. PIETRANGELO: Well, all plants have to comply with their tech specs. That is addressed in their tech specs. And if they don't, I think the consequences are pretty serious for the NRC.

MEMBER BANERJEE: Right. But I guess their concern was that it might be that plants are leaking away and operating. That is the way it read, that if plants were truly shut down as soon as the leaks were detected, that would be one thing but some plants operated with ongoing leaks for quite a while.

I mean, that was the gist of that letter. Right?

MR. BUTLER: Well plants will, once they identify the leaks, some plants will, depending upon where the leak is coming from, it makes sense to not shut down right away to address a leak in a non-consequential part of the plant. But the regulations, the requirements, the tech specs that are directed to address that will be followed.

MEMBER BANERJEE: Right but that was -- Anyway, I don't want to belabor it because they are not here to say anything about it but their letter was sort of not in support of this, at least one letter, because they felt that plants were not being shut down when they leak. That was --

MR. BUTLER: I think the characterization of the second letter was that they were not -- If it was pursued, they would like to see some additional measures taken to ensure that the leakage detection actions were properly addressed.

MEMBER BANERJEE: Okay well let's move on. Any other questions? Yes, Bill.

MR. RULAND: May I, Mr. Chairman? Just a couple of things. First of all, David Lochbaum from UCS is going to be at the committee meeting. So he will be able to voice whatever the current opinion is. We have talked to him since then in preparation of

the Commission meeting. So he will have some views that he will bring forward.

The second question and looking at your last slide, John, I see something here that I just need a little clarification on. You say credits defense-in-depth measures already taken by plants for leak-before break. Are you suggesting the licensees would be willing to add to their licensing bases the commitments that they have made for compensatory measures for GSI-191? They would then suggest or not?

MR. BUTLER: That is what that is suggesting. Again, I can't speak to specifics but you know, the measures that were taken that were identified in Bulletin 2003-01, plants are continuing to follow those measures. So if it is a matter of documenting them in some fashion and continuing them, I don't see that as a problem.

MR. RULAND: Yes, it is just a clarification. I just wanted to know what you meant by credits.

And the final thing is just for the full Committee's information, today is Mike Scott's, my distinguished colleague to my right, it is his last ACRS meeting as the GSI-191 Branch Chief. I would just like to acknowledge Mike's really outstanding

performance in his role. I think you obviously have recognized that and I am deeply grateful for his performance as is the other staff in the whole NRC. So thank you.

(Applause.)

MEMBER BANERJEE: And we would also to acknowledge an outstanding performance.

MEMBER SHACK: So where are you going to reemerge?

MR. SCOTT: I am going to be the Chief of the New and Advanced Reactor's Branch in the Office of Research.

MEMBER BANERJEE: Okay, I will hand the meeting back to you, Mr. Chairman.

CHAIRMAN ABDEL-KHALIK: Thank you.

MEMBER BANERJEE: Thank you.

CHAIRMAN ABDEL-KHALIK: At this time, we will take a break until 10:45.

(Whereupon, the foregoing meeting went off the record at 10:30 a.m. for a closed session and went back on the record at 1:14 p.m., continuing the open session.)

CHAIRMAN ADBEL-KHALIK: We're back in session. At this time, we will move to Item 4 on the agenda, Long-Term Core Cooling Approach for the

Economic Simplified Boiling Water Reactor Design, and Dr. Corradini will lead us through that discussion.

MEMBER CORRADINI: Thank you, Mr. Chairman. So, let me give a little bit of background to the members about this. The Commission wrote a letter in 2008, an SRM, excuse me, directly staff to, essentially -- I keep on thinking that everything is like us, they write a letter. An SRM directing --

MEMBER SHACK: It's a little different impact.

MEMBER CORRADINI: Yes, good point. Directing the staff to look at each of the new advanced reactor designs, and verify that all those designs can successfully maintain long-term cooling under all circumstances. We had a series of meetings going back -- for ESBWR, we had a series of meetings going back in October and November of 2009, and most recently in July of 2010 to review this for the ESBWR design.

This is now -- this presentation, I should say, is specifically addressing long-term cooling, so, essentially, this SRM by the Commission, and we're going to be writing a letter on this one narrow aspect of the ESBWR. So, with all due respect to the Members, if you stray, I will keep you -- I will get

us back on track, because next month we have the joy of the complete ESBWR review with closed items for ESBWR. So, with that, I'll ask Mr. Marquino to lead us off. Is Jesus on the line?

MR. MARQUINO: Yes, I believe so. Jesus, are you there?

MR. DIAZ-QUIROZ: Yes, I'm on the line.

MR. MARQUINO: My name is Wayne Marquino. I work for GE Hitachi. The presentation was prepared by myself and Jesus Diaz-Quiroz. And there was a meeting in December of 2009 on this long-term cooling --

MEMBER CORRADINI: November.

MR. MARQUINO: November Subcommittee and then December full Committee. GE presented to the full Committee, but for this meeting we were asked to come back and mainly talk about debris and how we're addressing debris in the ESBWR. So, I have one slide on long-term core cooling, and then we'll go into the debris topic.

MEMBER CORRADINI: May I interject one thing? So, just to remind the Members that were here, we had a -- Wayne corrected me that we did have a presentation back in December on long-term cooling, generally, and this was mainly containment response,

because ESBWR does not uncover the fuel under any circumstance under any DBA, so all the calculations we've seen to date have been both applicant calculations and NRC staff audit calculations looking at the containment response. And I asked GE to specifically address things that are typically talked about, long-term cooling and other designs to make sure we cover the waterfront. So, go ahead, I'm sorry.

MEMBER BANERJEE: Mike, did you have a Subcommittee meeting on this issue on the debris aspects?

MEMBER CORRADINI: No.

MEMBER BANERJEE: You have not.

MEMBER CORRADINI: It's been asked in the Subcommittee meetings with our consultants, Dr. Wallace and Dr. Kress, over three different meetings, but we've never had a meeting strictly on debris.

MR. MARQUINO: As you said, ESBWR does not uncover fuel. Even in the worst LOCA we have more than half meter of collapsed water level above the fuel at the time the level reaches its minimum. Also, the core does not dry out or heat up in an ESBWR LOCA, so the peak clad temperature is the initial temperature.

The containment pressure remains below the design pressure for 72 hours using the passive systems, and then at 72 hours, we achieve a pressure reduction by operating fans in the vent line from the passive containment cooler that cycle non-condensables out of condenser, and that increases its capability, brings non-condensables back from the wet well and reduces the containment pressure. So, the passive systems provide cooling for 72 hours followed by a depressurization by a PCCS vent fan, which is a RTNSS category system.

So, the rest of the presentation goes from those passive systems into how we would use active systems, and how they could be affected by debris.

MEMBER CORRADINI: So, if I might, maybe you're going to say this, but I want to make sure that everybody remembers. So, under all DBA analysis, and under their to be written procedures, passive systems are the first line in all response to all of these design-basis accidents. Is that correct?

MR. MARQUINO: Yes.

MEMBER CORRADINI: Okay.

MR. MARQUINO: The safety-related cooling is provided by a gravity drain cooling system. Its cooling inventory for core coverage is in GDCS pools,

and the injection drain those pools into the vessel. And then blow off from the core is made up by the condensate from the PCCS. That circulation loop does not use pumps. It's a safety-related source, and it's not in a flow path which would be affected by debris during the LOCA.

Additionally, we have equalizing lines in the pools which would open if the water level dropped below or approached the core. However, in the 72-hour coping period, and during the 30-day RTNSS period, those lines are not required to open. So, we provide short and long-term cooling through a passive GDCS system, and passive containment cooling system.

CHAIRMAN ADBEL-KHALIK: Are the pools themselves covered so that no debris would fall into the pools?

MR. MARQUINO: Yes, there is a plate that closes off the GDCS pool from the drywell. It's perforated to prevent debris from entering the pool. And in the blow down phase of the LOCA, there's not -- that compartment is part of the drywell, so there isn't a differential pressure driving debris into the GDCS compartment, as there would be between the drywell and wet well.

MEMBER BANERJEE: Do you have a little

sketch, because I can't recall the details, since I haven't been on this Committee for a long time, so we know where things are.

MS. CUBBAGE: This is Amy Cubbage. I believe if you look at the staff slides, we have a figure.

MEMBER BANERJEE: Which one?

MS. CUBBAGE: It's not very detailed, but the staff slides, Figure 9.

MEMBER BANERJEE: Figure 9.

MEMBER CORRADINI: Slide 9.

MEMBER BANERJEE: Yes, that's fine.

MS. CUBBAGE: The GDCS is covered from above, and the vertical connection where the GDCS air space and the drywell communicate.

MEMBER BANERJEE: So, the GDCS pool is covered at the top?

MEMBER CORRADINI: Yes.

MR. MARQUINO: So, it's enclosed, it's some sort of a gap that's about .8 meters, and the gap is covered by a perforated plate.

MEMBER CORRADINI: Does that make sense, Sanjoy?

MEMBER BANERJEE: Yes. I think so. It would be nice to see a picture of what it looks like.

MEMBER CORRADINI: I'll look for one. When GEH and the staff's contractor did the analysis, there was a scaled -- they both are scaled models for the TRACG and the MELCOR, but it's not in these handouts. I can get you one.

MEMBER BANERJEE: And the GDCS pool does not accumulate any float offs like you find in the pores of BWRs and things like that.

MR. MARQUINO: Well, the -- it's stainless steel lined. It won't be subject to corrosion. We don't expect to have to go into that pool for maintenance activities.

MEMBER SHACK: And the holes in the perforated plate will be smaller than the orifice holes in the fuel support castings.

(Off mic comment.)

MEMBER CORRADINI: We're getting ahead of you, but we're anticipating the next question, just in case.

MR. MARQUINO: Okay. So, that's the passive systems, but we do have active defense-in-depth systems. We can cool the suppression pool using the fuel and auxiliary pool cooling system. We could do that during normal operation. We also have a reactor water cleanup shutdown cooling system, and

that has a cross-tie to the FAPCS system.

MEMBER BANERJEE: So, where does the debris in this case end up, both the latent and debris generated during the -- say, if I was looking at this picture.

MR. MARQUINO: Yes.

MEMBER BANERJEE: Where would it end up?

MR. MARQUINO: Okay. The most likely places for debris to end up are at the lowest point in the reactor building, which is the lower drywell, and the bottom of the suppression pool. So, during a LOCA blowdown, there will be a flow path from the drywell through the vents to the suppression pool that could carry the debris through there, or if it's blown loose and it doesn't make it to the suppression pool vent, it would go down into the lower drywell.

MEMBER BLEY: But when it's in the suppression pool, at least at first, it's going to be well agitated and mixed up.

MR. MARQUINO: Yes.

MEMBER BLEY: Not on the bottom of the suppression pool, at least for some time, maybe a long time.

MR. MARQUINO: Right. And we have some information about how -- it's on the settling time in

the suppression pool, but the question was where will the debris be, and those are the two most likely areas for debris. It's not much of a concern in the lower drywell, because we're not taking a suction source on the lower drywell, so the suppression pool is the area of concern.

MEMBER BANERJEE: So, what happens --

MR. MARQUINO: Well, from --

MEMBER BANERJEE: Imagine that this debris doesn't settle, stays there. Let's postulate --

MEMBER CORRADINI: Is that one of your slides?

MEMBER CORRADINI:

MR. MARQUINO: Yes. We have a slide showing the suction strainer that we've provided for the debris. I'll get to that in the --

MEMBER BANERJEE: Okay. It would be nice to have a few slides. I mean, pictures instead of words here, because I can't tell what all this means.

MEMBER CORRADINI: He's getting there.

MEMBER BANERJEE: He's getting there.

MEMBER CORRADINI: But just so I make sure I understand your question, you're saying first you have to assume that the PCCS doesn't function.

MEMBER BANERJEE: No, no, I'm only trying

to understand where the debris is.

MEMBER CORRADINI: Okay. I misunderstood.

MEMBER BANERJEE: Where it's going, and where it's getting caught. I mean, if you just give us a picture showing the fate of the debris, this would be very useful.

CHAIRMAN ADBEL-KHALIK: Now, it is possible for the debris, obviously, to accumulate on the cover of the GDCS pool. And you have holes in that cover, and let's say it's not going to through the holes, but it's going to plug the holes. Does that prevent drainage of the GDCS pools?

MR. MARQUINO: No, and the --

MR. DIAZ-QUIROZ: This is Jesus Diaz from GEH. As far as the number of holes on the perforated plate, there's not a lot that's needed for proper drainage to occur.

CHAIRMAN ADBEL-KHALIK: Okay. Because you do need communication between the free surface and the drywell.

MR. DIAZ-QUIROZ: Right. So, when we look at where is it that we need to locate the holes so we can provide proper drainage, we can put these holes in areas where it's not in the direct line of any jet impingement that would actually force debris onto that

plate. You would end up getting a place where you have no holes, and then you would have some holes where you wouldn't have direct line of sight to those areas that would create jet impingement.

CHAIRMAN ADBEL-KHALIK: That's fine. Thank you.

MR. MARQUINO: So, going through active systems that we could apply, we have a high-pressure injection system. In a LOCA, that might operate early on, but it does isolate automatically at a point to prevent excessive water addition to the containment, which has an adverse effect on the containment pressure.

We also have a low-pressure injection function provided by the FAPCS system, or a cross-tie to the shutdown cooling system. And that can take water from the suppression pool, or the condensate storage system and pump it into the reactor. Operator action is required to initiate the low-pressure cooling injection system.

So, given that we have an active system that would be used, defense-in-depth, to pump from the suppression pool into the reactor, what are the possible sources of debris that could be pumping, or drawing on? Possibly insulation, but we have

committed to only use reflective metal insulation. There won't be any fibrous insulation in ESBWR. Degraded coatings, but we committed to use only qualified coatings that meet Reg Guide 1.54, and ASTM D 5144.

We don't expect rust particle loading, because we will use approved coatings on the metal surfaces. We have the potential for dirt and dust, and random fibrous material, like rags left in the drywell. We have considered that in sizing the suction strainer.

MEMBER BLEY: And the coatings, I would guess, could get eroded by the jet impingement, so you could have some of the coatings that you're putting on there ending up in that mix.

MR. MARQUINO: Yes, but from local abrasion, possibly some limited extent. Jesus, do you want to comment on what we assumed in terms of coating load?

MR. DIAZ-QUIROZ: Right. So, as far as the way the debris strainer was sized, we looked at what were the possible debris sources for ESBWR, and then -- to make sure we had a robust design, we looked at existing BWRs, as far as what the criteria they used to design their strainers, so we ended up using a more

bounding debris load, which did use large coatings, fibrous debris, and various other source terms in a typical BWR.

MEMBER RAY: What about jet impingement on concrete from broken pipe?

MR. DIAZ-QUIROZ: So, as far as jet impingement on concrete, you have where just about everything inside containment is covered with stainless steel liners, like in the pools or carbon steel liners in the rest of the walls, so you have limited possibility that you will actually get bare concrete. For instance, the GDC has walls themselves which provide a lot of surface area, are covered by steel, and then the diaphragm floor, which is a sort of sandwich-type composite, that's also covered by carbon steel. So, there's a lot of coverage with steel liners to prevent the spalding action you would get through the jet impingement.

MEMBER BANERJEE: The GDCS pools are stainless steel lined.

MR. DIAZ-QUIROZ: Yes, right --

MEMBER CORRADINI: I think he's talking the outside wall.

MR. DIAZ-QUIROZ: The outside walls are covered with steel, as well.

MEMBER BLEY: Wayne, before you get too far from your previous slide, I wanted to ask you a question. I know from a safety analysis point of view all you need are passive systems for the first 72 hours. Will there be a prohibition against operators using available active systems? Might the procedures have them go through high-pressure injection and then low-pressure injection, or might they decide that on their own?

MR. MARQUINO: Right. We don't want to restrict the operator from using these active systems.

MEMBER BLEY: So, they could get started pretty early pumping from the suppression pool, if they so decided.

MR. MARQUINO: Right. Now, we haven't worked through the emergency procedures.

MEMBER BLEY: I know.

MR. MARQUINO: But I expect I'll have some involvement in that. And in the five minutes that the reactor is blowing down, that might be a good time to just stand back and monitor, and assess the situation.

MEMBER BLEY: I like that. Can you imagine what the environment is like when you're getting blowdown on the system? That's probably all you can do is stand back.

MR. MARQUINO: So, we have the systems. We don't need them during that period, so I expect the emergency procedures would direct the operator, if ADS has just been initiated, don't initiate low pressure injection for five minutes, or ten minutes, because it's not needed for core cooling in that kind of --

MEMBER BLEY: And we know it's not needed even longer, but I suspect this stuff will remain suspended for a lot longer than five or ten minutes. So, they could, but you haven't talked about the strainers yet, so if they do, you think you're covered, anyway.

MR. MARQUINO: Yes.

MEMBER BLEY: Go ahead.

MEMBER ARMIJO: Wayne, where are the strainers located on --

MEMBER CORRADINI: I think he's leading into your next slide.

MR. MARQUINO: Yes, I hope. And we don't -- okay. So, this is what a strainer looks like. We call this stacked disk strainer. It's similar to those used in the operating BWRs. As Jesus said, we're using an operating plant debris source, even though we've taken more counter measures against debris that aren't practical for them to backfit.

It's a Quality Group 1 component, and a Seismic Category 1 component. It has a hole size of 2-1/2 millimeters, and the seismic category in hole size will be performed by ITAAC.

MEMBER BANERJEE: Can you show us how this strainer works?

MR. MARQUINO: Yes. Jesus, we don't have a picture showing the location of the strainer in the suppression pool.

MEMBER BANERJEE: But even this strainer, I mean looking at this picture, I have no idea how it works. It doesn't --

MR. DIAZ-QUIROZ: Right. So, if you're looking at the right side of that picture there, the pipe would actually be connected to that hole you see, so that's the flange end of the strainer. So, then flow would be, if you look at the left, flow would be coming in from the top, and in from the sides. So, then there's plates, it's covered, the cone shape is plates that's perforated. So, you have these disks that provide, I guess, additional stability, but also prevent some of the larger pieces of debris from getting to the perforated plate. So, that's how you would have flow go through those strainers.

MEMBER BANERJEE: So, that conical piece is

a perforated plate?

MR. DIAZ-QUIROZ: Right.

MEMBER CORRADINI: Like an inverted spaghetti strainer.

MR. DIAZ-QUIROZ: Right.

MEMBER BANERJEE: But that doesn't help me.

MEMBER CORRADINI: That's what it looks like.

(Simultaneous speaking.)

MEMBER ARMIJO: You say -- repeat that, what you just said.

MR. DIAZ-QUIROZ: Right. So, the right picture there, the bottom of it is where -- that's where you would have the flange. That's the flange area, so the pipe would actually be connected there.

MEMBER STETKAR: And, Jesus, the right side just for Sanjoy's edification, the right picture does not show the interior solid plate thing with holes in it.

MR. DIAZ-QUIROZ: No, it --

MEMBER STETKAR: That's the assembly that slides over it, basically.

MEMBER BANERJEE: Thank you. That was very illuminating. Really, because I didn't see at all what the hell the two were. Okay.

MEMBER ARMIJO: They're two different views of the same thing, aren't they?

(Simultaneous speaking.)

MEMBER CORRADINI: The spaghetti thing is not inside the right one.

MR. DIAZ-QUIROZ: It is. It's tilted up in the disk.

MEMBER STETKAR: No, it's not, Jesus, because if you look through it, you see the edges of the plates.

MEMBER BANERJEE: That helps a lot. Now, you -- this inverted cone or whatever has little holes in it. And those holes are these 2.5 millimeter holes?

MR. DIAZ-QUIROZ: Yes.

MEMBER BANERJEE: Why is it conical? I mean, is there a reason to make it conical?

MR. DIAZ-QUIROZ: There's many reasons, but there are other strainer designs.

MEMBER BANERJEE: I have not asked any more questions. Carry on. That's fine. Presumably, you've tested these things, and they work. Have you tested them?

MR. DIAZ-QUIROZ: Right. These are installed, and they've been tested extensively, yes.

MEMBER BANERJEE: Okay.

MEMBER ARMIJO: And where are they located in the suppression pool?

MR. DIAZ-QUIROZ: Right. So, I'm sorry you don't have a picture to look at, but if you were to look from the top down, top into the containment, and you would be looking at the top of the suppression pool, you have X-quenchers that surround most of the outer radius of that wall inside the suppression pool. There's a total of 10 quenchers, and then there's 12 actually horizontal bands. And then if you were to look at, say, superimpose looking at the reactor where all of the steam lines run out to one side of containment, well, if you look at that exit and go 180 around that circle, and then you would see two spots where you would have quenchers where we don't have quenchers, since there's only 10 of them. So, there's two spots there, so the strainer could be located in either one of those spots right now. I don't know if that's really how the picture --

MEMBER ARMIJO: Very hard. It really would be nice to have a picture.

MEMBER CORRADINI: So, can I say back at you, and then ask a question to clarify. So, you're saying that in places where there would have been

quenchers, you put in the suctions, are they standing up from the floor? And, if so, how much are they standing up from the floor of the suppression pool?

MR. DIAZ-QUIROZ: Right.

MEMBER CORRADINI: Or are they on the side?

MR. DIAZ-QUIROZ: No. So, they're inside the suppression pool, and so -- and I can't recall off the top of my head, but say they're about half a meter off the floor, and then there's a few meters below the surface level. And there's various reasons why you'd want to locate it suspended, you might say, in the pool right off the wall.

MEMBER CORRADINI: Okay. So, they're suspended off the wall. That's what I was trying to get at.

MR. DIAZ-QUIROZ: Right. So, they stick out a little bit a ways from the wall, not much, because you need to support them.

MEMBER CORRADINI: So, this is --

MR. DIAZ-QUIROZ: Also, sit above the floor, as well.

MEMBER CORRADINI: So, we've got a cartoon on Slide 10 of the staff that we can come back to that shows it.

MEMBER ARMIJO: Slide 10?

MEMBER BANERJEE: You know what would really help is to have a picture of how these are located in the suppression pool. At the moment, I'm trying to draw this picture in my mind, as we speak, without success.

MS. CUBBAGE: If you look at the staff's Slide 10 on the lower left, that's depicting the suppression pool, and it's showing the strainer off the side of the wall.

MEMBER ARMIJO: Where are you looking, Amy?

(Simultaneous speaking.)

MEMBER BLEY: So, actually, you aligned it horizontally with the suction pipe going out in a horizontal direction.

MEMBER CORRADINI: Right. It's not coming from the bottom, it's coming from the side. That was what I was trying to get at. And it's about a half a meter up, Jesus. Is that correct?

(Simultaneous speaking.)

MEMBER CORRADINI: Jesus, I just want to repeat what you said. It's horizontal and sitting about half a meter up, a few meters from the contact surface. Right?

MR. DIAZ-QUIROZ: Right. The cool surface, right.

MEMBER CORRADINI: Sorry, cool surface. Sorry.

MEMBER BLEY: Amy, this is kind of a PNID flow chart kind of thing. Are the dimensions of the strainer roughly the way they look here in this picture?

MS. CUBBAGE: You'd have to ask GE. And for your benefit, Jesus, this is a figure from the DCD of the FAPCS system that we're looking at, that I believe-- I don't know if it's --

MR. DIAZ-QUIROZ: Right.

MEMBER STETKAR: I think it's Figure 262-1, I believe.

MR. DIAZ-QUIROZ: Right. And there was an RAI which we sent in, where we would be placing these strainers. And if I can find that RAI, but there's also another figure in Chapter 5 of the DCD which shows the quencher arrangement in the suppression pool. And we could easily point out where that would exist. If you could give me a few minutes, I don't know if we can send something to Wayne so he can put it up, or not, a better picture.

MEMBER BANERJEE: Can we just ask for a picture that we can understand to scale.

MR. DIAZ-QUIROZ: Okay.

MEMBER BANERJEE: Preferably an isometric view. If you cannot provide isometric view of plant and elevations, so we can see --

MEMBER CORRADINI: Let's move on, and we'll get that. Okay?

MEMBER BANERJEE: Yes.

MEMBER POWERS: Dr. Corradini, can I ask a question of -- mostly out of curiosity.

MEMBER CORRADINI: Go ahead, Dr. Powers.

MEMBER POWERS: I wonder if you could give me an order of magnitude feel of the amount of cable -- insulated cable exposed to the post accident environment in your containment structure?

MR. MARQUINO: I don't have that number offhand, but we did commit to an upper limit in the PH evaluation for fission product retention. So, we do have an upper bound on the exposed chloride content cable insulation.

MEMBER POWERS: And, when you do that analysis, what kind of doses are you taking? You do King's doses, or --

MR. MARQUINO: We took the alternate source term dose, and --

MEMBER POWERS: Calculated from the alternate source term --

MR. MARQUINO: Yes, it was tied to the alternate source term. I don't remember the details about how much of that was assumed to be in the suppression --

MEMBER POWERS: Really what I wanted to know is whether you're using the King's analysis, which is tied to the GID source term, or you did your own with the ASD source term.

MR. MARQUINO: We used ASD source term.

MEMBER POWERS: I just looked at what the chloride did, and you assumed that was just uniform, or did you have an exponential decay on the generation rate. That may be too detailed.

MR. MARQUINO: I don't know.

MEMBER POWERS: I'll look in the document, itself. That's too detailed. I understand what you did.

MR. MARQUINO: It's in the fission product retention NED report that's referenced from Section 15.4.

MEMBER POWERS: Good. Thank you.

MR. MARQUINO: Okay.

MEMBER POWERS: My curiosity is satiated, sir.

MR. MARQUINO: Okay.

MEMBER CORRADINI: Go ahead.

MEMBER BANERJEE: Just to ask this question, suppose you had some latent debris in containment, how much of it would end up in the suppression pool in the early stages?

MR. MARQUINO: It depends on where the break is relative to the main vent openings in the drywell. So, we have a --

MEMBER BANERJEE: Let's say I postulate you have 200 pounds of latent fibrous debris in containment. How much would end up in the suppression that --

MEMBER CORRADINI: You don't have to agree to 200 pounds.

MEMBER BANERJEE: No, I'm just postulating that. He picks a number.

MR. MARQUINO: So, back on Slide 16 in the backup slides. These are the debris source terms that were used to determine the plugging of the strainer, and the increase in pressure drop on the strainer.

MEMBER BANERJEE: So, this was what ended up in the suppression pool, or what you postulated ended up in the suppression pool.

MR. MARQUINO: Yes.

MEMBER SHACK: So, it's only one cubic foot

of fibrous debris?

MR. DIAZ-QUIROZ: Wayne, if I may add, this is Jesus Diaz again from GEH. There was an RAI, RAI 6.2-123 of Supplement One, which described the analysis we went through on the debris strainer. And even though we used this one cubic foot of fibrous debris, we did look at the effects of fiber from all points, thin fiber effect, and also you have more -- so, it turns out that through our analysis that the thin fiber effect was more limiting as far as the strainer was concerned. And those are the results, I believe, that are presented in one of the slides that Wayne is going to go through here in a minute.

MEMBER BANERJEE: Well, I guess the issue here is we're not very concerned about your strainer. It's what passes through the strainer.

MR. DIAZ-QUIROZ: That is true.

MEMBER BANERJEE: And, I guess, when we came to look at the ABWR, we -- if I'm not mistaken, that had a clean containment, but had quite a bit higher fibrous debris that we had to consider in latent. I don't know the number. Perhaps, Professor Abdel-Khalik will know, because this is --

CHAIRMAN ADBEL-KHALIK: It wasn't that much, because it was mostly rags left in containment.

MEMBER BANERJEE: Right. Yes, but it --

MEMBER SHACK: I thought a cubic foot was -- I think it's a cubic foot.

MEMBER BANERJEE: Was it a cubic foot?

MEMBER SHACK: Yes.

MEMBER BANERJEE: Okay.

MR. McKIRGAN: If I could, this is John McKirgan from the staff. Yes, the South Texas assumption is also one cubic foot, I believe.

MEMBER BANERJEE: So, this is consistent with that. And you tell us how much of it gets through.

MEMBER CORRADINI: He's on his way to that.

MEMBER BANERJEE: Okay.

MEMBER CORRADINI: He's working towards that. We alerted him you'd be present at the meeting.

MR. MARQUINO: So, now with that

MEMBER BANERJEE: Paying you back for not being here yesterday.

MEMBER CORRADINI: I know. I know. I'm sorry.

MR. MARQUINO: With that debris loading on the strainer, we look at the net positive suction head margin on the pump, so we've evaluated the FAPCS pump in low-pressure injection mode. We don't take any

credit for containment overpressure. And we've looked at a number of different pool temperatures. What is being presented here is the minimum and maximum pool temperatures. And we -- this evaluation covers the shutdown cooling pumps, as well. They're at the same elevation as the FAPCS pumps.

MEMBER BANERJEE: Are these head losses based on experiments?

MR. MARQUINO: Let's see. Some of the head losses are based on the elevations, and --

MEMBER BANERJEE: I mean, the total debris head loss.

MEMBER CORRADINI: He's asking about the debris head loss column.

MR. MARQUINO: Yes. Jesus, is the debris based on a correlation, or experiment?

MR. DIAZ-QUIROZ: Right. The debris head losses were calculated using correlations that were based on testing, yes.

MEMBER BANERJEE: Whose correlations are these?

MEMBER ARMIJO: Was that testing done with a kind of mix of materials that are in your Slide 16?

MR. DIAZ-QUIROZ: Yes. Right. So, since that was expedient, you might say, for us to use a

bounding debris source term, because that's what the BWR, typical BWRs go analyze to, so that was what they'd have to do as far as coming at derivations of the correlations.

MEMBER BANERJEE: So, who did these tests, and whose correlations are these?

MR. DIAZ-QUIROZ: I'd have to go back and look through the analysis to be able to answer that question.

MEMBER CORRADINI: But can -- as we put that aside to be answered later, is this part of the BWR Owner's Group testing that's back from the `90s? That's what I assumed.

MR. DIAZ-QUIROZ: I'd have to look again through the analysis.

MEMBER CORRADINI: Okay.

MR. DIAZ-QUIROZ: I want to give you an answer.

MEMBER CORRADINI: Thank you.

MEMBER BANERJEE: And we need an answer on that. But more the point, how do you know how much passed through? Was that also tested for?

MEMBER ARMIJO: Probably not.

MR. DIAZ-QUIROZ: No, that was not. Currently, the BWR Owner's Group has an effort to

actually go do that, and also quantify how much debris gets in the reactor in the typical BWR reactors.

MEMBER ARMIJO: You don't have much head loss, where else is it going to go?

MR. MARQUINO: Okay. So, you can see that we have a large MPSH margin with this debris loading on the strainer. Now, suppose the debris gets through the strainer? The earliest time that we could -- we can't draw in debris if the pump can't overcome the vessel injection pressure. So, there's a time in the LOCA before which we can't reasonably be injecting debris. And that pressure is 290 psi. The time the vessel would reach that pressure in a LOCA is 150 seconds. Now, that does allow considerable time for settling in the suppression pool.

MEMBER BANERJEE: Settling of the RMI.

MR. MARQUINO: Settling of the RMI. Right.

MEMBER BANERJEE: Nothing else.

MEMBER STETKAR: Wayne, is that 150 seconds based on the ADS timing, or is that --

MR. MARQUINO: Yes, that's based on the ADS time.

MEMBER STETKAR: So, for a larger LOCA, you could get down more quickly, couldn't you?

MR. MARQUINO: Well, even for a -- this

number, I believe, is for the minimum water level break, so it's specific to the scenario that we evaluated for blockage. A higher -- a larger break would possibly depressurize faster, but the higher breaks also provide more water over the core. So, we selected the minimum water level break for this blockage evaluation. IC injection.

MEMBER BANERJEE: So, if we sort of look at the situation and say that -- let's just assume that RMI settles, but all the other stuff is in suspension. How many -- what fraction of the volume of the suppression pool gets injected before your long-term GDCS or whatever comes in? Is it half the volume, one-quarter of the volume, the whole volume?

MR. MARQUINO: I don't have a feel for that.

MEMBER BANERJEE: All right. Just putting what fraction of the debris which is suspended, if I assume it's all suspended except RMI gets injected.

MR. MARQUINO: Well, it's a big suppression pool, and this pump has a small flow rate relative to the suppression pool.

MEMBER BANERJEE: Yes. It pumps long enough it will pump it all out.

MR. MARQUINO: So, reasonably, the debris

has got to be distributed in the suppression pool, so it would take on the order of many minutes for the debris to collect at the pump suction, and be pumped into the vessel.

MEMBER BANERJEE: So, that's the question I'm asking you.

MR. MARQUINO: Yes. Numerically, I can't --

MEMBER BANERJEE: I don't want a qualitative answer, I want a quantitative answer.

MR. MARQUINO: I can't give you a number.

MEMBER CORRADINI: What are you asking, though? I'm --

MEMBER BANERJEE: How much of the debris gets injected into the pool, into the core, assuming -- let's say that some part of it passes through the strainers. It's a simple question.

MR. MARQUINO: Right. Okay. Well, going back, let me try and lay out the big picture basis for you. We have a debris source that was established for operating BWRs, and we have a fuel plugging fraction which is established for operating BWRs. And in these plants, their primary safety system is these ECCS pumps that take suction through the strainers and are, potentially, pumping debris into the vessel. So, the

ESBWR basis for blockage fraction in the core is based on the operating plants.

MEMBER BANERJEE: Yes, except that we, as you know, are reevaluating in-vessel effects right now. And in-vessel effects have been found relatively recently. And what implications they'll have on the operating BWRs we don't know at the moment. They certainly have implications on the operating PWRs. So, leaving aside what is happening with the operating BWRs, I'm simply asking the question, how much debris is getting into the core? Can you give me an estimate of that?

MR. MARQUINO: We -- in terms of the percent blockage, I can you tell that we --

MEMBER BANERJEE: I don't need the -- I just need to know how much.

MR. MARQUINO: In terms of what fraction of that total source is getting into the core, we have not quantified that.

MEMBER BANERJEE: Well, that -- I mean, how did you get blockage if you don't know how much gets in?

MEMBER ARMIJO: You consumed a lot of that stuff to create the blockage, and the difference has to go to the core, settle out.

MS. CUBBAGE: This is Amy Cubbage. I'd just like to first say that the staff shared your concerns with the potential for debris to be injected into the core in the event that non-safety systems were used. And, basically, to bound the situation, GE went with a conservative debris loading based on the operating units, even though they have been demonstrated to commit to lower debris sources. And they tried to figure out how much debris actually would go into the core, they conservatively assumed a large amount of debris would be injected. And if you'll let Wayne continue, he'll explain the analysis that was done to satisfy the staff that in the event that non-safety systems were used, the ESBWR core would remain cool.

MEMBER BANERJEE: That's fine.

MS. CUBBAGE: Okay.

MEMBER BANERJEE: I'd still like to know how much gets into the core.

MS. CUBBAGE: Well, that may not be relevant, if we can finish the presentation. Go ahead, Wayne.

MEMBER ARMIJO: Well, one thing I'd like to know is the bulk of your -- except for the RMI, the mass, the largest mass is iron oxide in a sludge or

particulate. Is there any -- do you have a size, particle sizes that you expect this to be? I would expect it to be pretty tiny, and it will shoot right through your strainers, and right into the core, shoot right through the fuel, but I don't know.

MR. MARQUINO: Right. I wouldn't expect that material to plug the fuel.

MEMBER ARMIJO: How about the debris filters at the bottom of --

MR. MARQUINO: The debris filters can grab things on the size of a wire, so material that goes through the strainer would be stopped at the debris filters.

MEMBER ARMIJO: You don't see plugging of the debris filters themselves, have the potential --

MR. MARQUINO: Well, that's where it --

MEMBER CORRADINI: I think that's where we may see a bounding analysis.

MR. MARQUINO: Sludge would go through the debris filter, but say fibers would probably stop at the debris filter.

MEMBER ARMIJO: Okay.

MR. MARQUINO: So, we've postulated blockage of the fuel. I want to note that we looked at blockage at the upper tie plate, but realistically

in ESBWR we don't expect that, because we don't have injection sources that put water into the shroud from on top. All the water goes into the downcomer, and it has to go through the lower plenum, and come up from the bottom.

We used our TRACG code to analyze the blockage fraction used by the BWR Owner's Group. We looked at the limiting water level break, the IC line, drain line break, and even with 75 percent blockage at a spacer at the bottom of the fuel channel, we did not see heat up of the fuel, so after the initial transient that there's no heat up from a pump trip or dry out, initially. We depressurize, we establish a water level, and we can tolerate 75 percent blockage at the inlet.

We can tolerate 100 percent blockage at the lower tie plate, but that credits the lower tie plate holes which would allow flow to come in from the bypass, so that's how we're able to say if that particular location was 100 percent blocked, we wouldn't heat up, but we would still be getting flow in through another path.

MEMBER BANERJEE: So, have you done any experiments on this at all?

MR. MARQUINO: In terms of -- getting back

to your question about what the -- how much is pumped through the strainer and ends up on the fuel, I believe the Owner's Group will conduct experiments that will include GE 14 fuel. Our fuel has the same geometry in the debris filter and spacers, so we would be covered by those experiments.

MEMBER BANERJEE: The issue here, which Professor Wallis brought up was that in your situation, you are basically having boil off. So, whatever gets into the channel eventually accumulates in the region of the boiling front, wherever that it is.

MEMBER CORRADINI: But there is no boiling front here, though.

MEMBER BANERJEE: Well, I think, eventually, there is, because you have to form steam, which then condenses and comes back. Right? If you don't form steam, how do you get long-term cooling? So, once stuff gets into the core, you have to have boiling. Right? Otherwise --

MEMBER CORRADINI: But there's no boiling front. The whole core is still covered, and boiling across its whole length.

MEMBER BANERJEE: Whatever, but there is steam being generated. Right? So, if you --

MEMBER ARMIJO: Top of the pool.

MEMBER BANERJEE: Yes, if you got water there and the debris is in the water, where does it end up? It's a question. As you evaporate the steam and it goes back, what happens to it? I mean, I don't know where it would go. This is a question you guys have to answer.

MEMBER ARMIJO: Well, it either stays suspended in the water, or comes out as a sludge somewhere, or deposits on a hot surface.

MEMBER BANERJEE: I don't know. I'm just asking the --

MEMBER CORRADINI: I guess what I'm -- I understand what you're getting at. So, you're saying you create some sort of sludge at the interface, but the interface is way above the active core.

MEMBER BANERJEE: Well, it depends where this is. Is there steam generation in the core?

MEMBER CORRADINI: Sure. I'm sure there must be.

MEMBER BANERJEE: Yes, so if there's steam generation in the core, then depending on the conditions you're going to get concentration wherever steam is being generated.

MEMBER CORRADINI: But I guess just to

fight back a bit here, I thought Graham's point was that in other designs, other reactors, that level is inside the core. The level here where I'm separating the steam from the water is a meter or more above the active core, so all the gook would be there, not in the core.

MEMBER BANERJEE: Graham's point was not where the two-phase level was, necessarily. Because a two-phase level could be above, and would be above the core.

MEMBER CORRADINI: Right. And it always is in this --

MEMBER BANERJEE: If it isn't, you're in deep trouble, anyway.

MEMBER ARMIJO: We've had this in operating plants. If you have boiling in water that's got a lot of iron sludge, it'll deposit, and you can get local burnout.

MEMBER BANERJEE: Right.

MEMBER ARMIJO: Okay. But here, the boiling is really at the top -- this water, steam interface at the very top, and some of that stuff is probably going to glomerate --

(Simultaneous speaking.)

MEMBER BANERJEE: I'm not disagreeing with

you. I'm simply asking the question.

MEMBER ARMIJO: How do they treat it?

MEMBER BANERJEE: Where does this go?

MEMBER ARMIJO: Yes.

MEMBER BANERJEE: You know, it could be that you're right, that it forms a scum at the top, or whatever, or it could be depositing in the region where the steam is being formed. It's a question.

MEMBER ARMIJO: Well, unless it's washed out through the break, it's going to stay in the core somewhere.

MEMBER BANERJEE: There is no washout in this case. Right?

MR. MARQUINO: But these are low -- we're down to a low heat flux. You're describing things that operationally are a concern if we want to use this fuel again, but in terms of --

(Simultaneous speaking.)

MR. MARQUINO: -- causing it to reach 2200 degrees Fahrenheit and damage the clad, we've got a lot of margin.

MEMBER BANERJEE: So, you can show us to our satisfaction at some point, you haven't yet, that this material will not form a region that will be starved of cooling sufficiently that the temperature

can rise to levels which we are concerned about.

MR. MARQUINO: It's not going to cause a plug in the fuel channel.

MEMBER BANERJEE: And this is based on what experiments? Because what we're seeing with the PWRs is that this is not the case. So, how is it that you are able to stick handle around this, is it that your shield design is so different, and your experiments show it's so different?

MR. MARQUINO: Well, we're stabilized with the water above the core. We're down at a low heat flux, and --

MEMBER BANERJEE: Everybody is.

MR. MARQUINO: And, again, this is the backup system, so the -- this is not the primary safety-related scenario that we're discussing.

MEMBER BANERJEE: I missed that.

MEMBER CORRADINI: This is not the design basis accident.

MEMBER STETKAR: But it might be the operational results of that initiator.

MEMBER SHACK: Yes, go over again how this system works. I mean, you have the passive systems, and we're discussing now the non-safety systems. But I'm assuming that the automatic signals will trip the

passive system, and the operator can then make the choice whether he wants to throw these systems in or not.

(Simultaneous speaking.)

MEMBER BLEY: If he keeps his hands in his pockets, I think there isn't much question that you're all right for some time, but if he doesn't, all these things come up. And what we've been seeing in the PWRs is pretty --

MEMBER BANERJEE: Scary.

MEMBER BLEY: Different, yes.

MEMBER ARMIJO: But I don't think the PWRs use this particular mix of debris. They have a lot more of the fibrous stuff.

MR. MARQUINO: Yes, and our chemistry is considerably different. They have an acid chemistry.

MEMBER ARMIJO: And TSPs, some of them take it out, so they have a different kind of --

MEMBER BANERJEE: Well, the concern is not with the sump screen blockage, it's with the in-vessel effects, which --

MR. MARQUINO: Right, but they're -- so, they have a sump that is very limited in volume. We have a big suppression pool.

MEMBER SHACK: Four thousand cubic meters

is what I calculate.

MR. MARQUINO: They have very low potential for anything to settle out before it's pumped into the vessel.

MEMBER BLEY: They're not using the sump any more. They're using the whole bottom of the containment.

MR. MARQUINO: Some of them? Okay.

MEMBER CORRADINI: I think we've got to -- I guess I want to call a time out in the sense that we're starting to compare -- and I don't think it's -- we can argue about it privately, but I'm not sure it's appropriate with the applicant to argue about this design versus that design.

MEMBER BLEY: It's not so much this design versus that one, it's why do we have confidence in what we're hearing, I think is the --

MEMBER BANERJEE: Well, if you have done some experiments, especially because you don't have cross-flow, you know, you've got channels, then that would maybe set our fears to rest.

MEMBER CORRADINI: I didn't understand your last point.

MEMBER SHACK: We have handcuff the operators.

CHAIRMAN ADBEL-KHALIK: I mean, if the operators were instructed not to do anything for --

MEMBER BANERJEE: You don't have cross-flow because you have channels. You can block the channel, and you don't have --

MEMBER CORRADINI: I guess we're doing too many things. I guess just let Said talk. I'm sorry.

CHAIRMAN ADBEL-KHALIK: I was saying, if the operators were instructed not to do anything for an hour or two, all these questions would disappear.

CHAIRMAN ADBEL-KHALIK:

MR. MARQUINO: And let me follow-up on that. Okay? We have procedures that are very much practical advice to the operator. They look at what's the quality of your injection source? I don't want to inject in pure water, if I have pure water inject. What's happening in the core? Am I trying to keep the core covered at all costs, or can I wait? These are the considerations that go into making up the emergency procedures, so knowing that we have -- operating plants have much higher debris source, they have procedures that say -- and their safety systems draw on the suppression pool and pump it into the vessel. So, how we can be so far off in ESBWR from having a backup system that can pump water into the

vessel? So, if the tests that are done for the operating BWRs or ABWR, which has active pumps drawing on the suppression pool turn up a problem, we'll write into our procedures wait for this period of time before you pump from the suppression pool into the vessel.

MEMBER BANERJEE: When are these experiments supposed to be done?

MEMBER CORRADINI: I don't think they've ever said. That's a leading question.

MEMBER BANERJEE: Well, he said that the BWR Owner's Group --

MR. MARQUINO: The Owner's -- Jesus, do you know anything about a schedule for Owner's Group tests?

MR. DIAZ-QUIROZ: From what I've seen in talks, I believe they mentioned 2010, 2011. We're well past 2010 here, so it's -- I guess it's a negotiation in progress as to when they're going to get conducted. But I believe they say they will -- they have presented their analysis using TRACG, as well, but, of course, testing came up, and I believe they committed, but I don't think they settled on a schedule.

MEMBER BANERJEE: See, the problem with all

these analyses is two years ago we were presented with analyses not with TRACG, but with something equivalent for another system, not yours, which we were very skeptical about, and asked them to go and do experiments. Sure enough, the experiments showed, unfortunately, that the analysis was not defensible.

MEMBER CORRADINI: I don't know about this other analysis. Was this 100 percent blockage?

MEMBER BANERJEE: It was 99 percent, or something. I've forgotten the number, but it's the same vein, you know.

MEMBER CORRADINI: But if I might just argue back briefly, but we have to have -- what I thought Wayne was saying is you don't go below active fuel. You have, essentially, his 100 percent is 16 channels, so you have, essentially, down flow from the other channels and a common communication above this pool. So, I thought that was the reason why they're not -- why they compute it to not be --

MEMBER BANERJEE: In the other case, it was cross-flow. So, there's always arguments.

MEMBER CORRADINI: Okay.

MEMBER BANERJEE: Unfortunately, experiments are better than analysis.

MEMBER CORRADINI: Let's frame that quote

from you.

MEMBER BANERJEE: Yes, always. And you believe that. When are these experiments due, 2011?

MR. MARQUINO: Yes, that's what Jesus Diaz said.

MEMBER CORRADINI: Wayne, do you want to wrap up?

MR. MARQUINO: I do. In summary, we have passive systems that provide core cooling for 72 hours, and keep the containment below it's design pressure. After 72 hours, we have RTNSS systems that can reduce the containment pressure. And we've considered debris that might be injected through backup systems. We have a suction strainer in the backup system that's based on bounding debris loading, and we'll provide adequate MPSH. And we've evaluated what the effect of blockage would be by debris that's pumped into the vessel on heat up, so we have a design that provides long-term adequate core cooling with margin.

MEMBER BANERJEE: So, if you go back to that slide which you have, if you have 100 percent blockage at the lower tie plate, then you say you can have adequate cooling due to flows that come from elsewhere somehow.

MR. MARQUINO: Yes, holes that bring water from the bypass into the fuel rod area.

MEMBER BANERJEE: And if you had 100 percent blockage at spacer number one, what happens at that point?

MR. MARQUINO: Well, if you block spacer number one, you're sealing off the bottom of the channel box. Right? And then you're boiling, you'd be boiling water there, and you'd have to have CCFL breakdown to allow water to come in from the top. We didn't evaluate that situation.

MEMBER BANERJEE: And the reason you think 100 percent blockage at the lower tie plate is more likely is because the holes are smaller.

MR. MARQUINO: Yes. The debris filter is -- so, we have a debris filter that's trying to stop things from getting into the fuel, so if it is being swept up from the lower plenum, it's most likely to get stopped at the debris filter.

Now, you probably won't like this answer, but we have over 1,000 fuel bundles, so this debris is not all going to accumulate at one bundle, or 16 bundles, as we assumed, it would be distributed.

MEMBER ARMIJO: But your orificed, right?

MR. MARQUINO: Right.

MEMBER ARMIJO: So, some of the assemblage will get more flow than others.

MR. MARQUINO: Yes.

MEMBER ARMIJO: So, those would be the ones that would be more vulnerable. That would have been the high-power assemblies.

MR. MARQUINO: The high-power -- yes, I would say it's more than the high-power assemblies are going to be drawing more flow in. Yes.

MEMBER BANERJEE: But you've taken the debris, and you've assumed that it's only going to go to 16 bundles, instead of --

MEMBER CORRADINI: Well, he didn't transport the debris. I'm going to just interject, because we have to move on. He didn't transport debris, he just blocked 16 channels.

MEMBER BANERJEE: If I needed to block the channels, what fraction of the debris?

MR. MARQUINO: So, again, we're tying back to the operating plants which have this blockage on a channel as their basis.

MEMBER BANERJEE: Well, I guess, Mike, you can move on, but there are a lot of unanswered questions here.

MEMBER CORRADINI: I wanted the staff to

have their time. I think we're a bit over, and I want to hear what their view of this is.

MEMBER BANERJEE: Right.

MEMBER SHACK: Well, can I just ask one more question, and it's the low-pressure injection. It says it can take it from the suppression pool, or the condensate storage. So, is the suppression pool the third source? I mean, I do the passive system first, then the condensate storage, then the suppression pool?

MR. MARQUINO: For -- yes, from a purity standpoint. However, as I mentioned, we have to look at the containment pressure. And if we keep pumping water in from condensate storage, and particularly if we rely on the passive systems, that's not going to work, so --

MEMBER CORRADINI: But how long can you do it? I think that's part of what he's asking.

MR. MARQUINO: Well, for HPCRD, which has a pretty low flow rate, I think it's like half an hour we could use it.

MEMBER CORRADINI: From which tanks?

MR. MARQUINO: From an outside --

(Simultaneous speaking.)

MEMBER STETKAR: It's one scenario.

MEMBER SHACK: It says low-pressure injection can come from condensate storage. That's what it says on the slide.

MR. MARQUINO: Right. So, that would --

MEMBER SHACK: I mean, you said you wouldn't draw from the -- how -- what would be the earliest that you'd be drawing from the suppression pool, I guess is the question?

MEMBER BANERJEE: He said 150 seconds.

MEMBER SHACK: No, no, no. That's when the pressure lets him do it.

MEMBER BANERJEE: Okay.

MEMBER SHACK: He has to make a decision to do it at any time.

MR. MARQUINO: Okay. So, your question is --

MEMBER SHACK: Yes, I want to stop drawing from the suppression pool, so I can --

MR. MARQUINO: Okay. I understand your point. I understand your point, but I think there would be a decision made to transfer over to the suppression pool just from the standpoint of containment pressure. In other words, if I have my reactor water level under control, and now I can probably throttle back, and that would be the time I

want to look into -- another thing I didn't mention is -- well, I don't want to get into too much of the staff's time.

MEMBER CORRADINI: No, you don't.

MR. MARQUINO: We had -- we marked up the DCD drawing showing the different flow paths. That was a request from the Committee. And in terms of when we would transfer over, if you had the water level under control in the reactor, you would go into suppression pool cooling mode to remove heat from the containment. And you'd be circulating water from the pool back to the pool, rather than from the pool into the vessel.

MEMBER SHACK: But you don't have a time for that.

MR. MARQUINO: And that's, actually, in Chapter 6, where we said in terms of containment cooling, we'll do that at like 72 hours to decrease containment pressure.

MEMBER CORRADINI: I'm sorry, Sam. So, to answer Bill's question, at this point, one would have to think about, and answer this question about the minimum time before you had to switch over.

MEMBER SHACK: He said 72 hours.

MS. CUBBAGE: There's no requirement to

switch over. The design basis does not require use of any -

MEMBER CORRADINI: I understand that. I didn't mean to imply that. I meant more to clarify what you were asking.

MEMBER SHACK: Well, I'm still not -- yes, because I can do this, it's still not clear to me at all when I start throwing these other systems.

MR. MARQUINO: I'm not required to inject with these systems. If the other system -- if there are multiple failures and the other systems didn't work, then I'm going to inject as long as I need to get water over the core. When I have water over the core, now I can think, okay, what am I going to do? Do I want to cool the pool now, and only make up as needed to keep level over the core? That's where the emergency procedures will provide guidance.

MEMBER ARMIJO: Okay. I just have one -- a different kind of blockage. I just wanted to ask if you evaluated the GDCS plate that you have these holes in the steel plate in order for the GDCS to drain properly. Have you evaluated the potential for blockage of those holes, so your GDCS doesn't work the way it's supposed to? Is that totally out of the question?

MR. MARQUINO: So, we're keeping the debris out of the GDCS compartment with this perforated plate that we discussed. And there isn't a strainer on the GDCS from the pool, and that -- the purpose -- intentionally, so we don't want things that got through those small holes blocking up another strainer inside the GDCS --

MEMBER ARMIJO: I'm not talking about blocking those holes, so that --

CHAIRMAN ADBEL-KHALIK: We talked about that earlier, Sam, and they said they are going to place the holes in such a way that they would not be blocked. I asked that question earlier on.

MR. DIAZ-QUIROZ: Right.

MEMBER ARMIJO: I was following up on your question. I guess I didn't understand. They said there were very few holes, and they were going to locate them somewhere that's favorable --

MEMBER SHACK: Very few holes needed.

MR. MARQUINO: Right. And they won't be in the zone of influence of main steam line break, for example.

MEMBER ARMIJO: Okay. Thank you.

MEMBER CORRADINI: Thank you.

MEMBER STETKAR:

MR. MARQUINO: All right. Thank you.

MEMBER CORRADINI: And we will now have the staff. Amy, do you want to say anything to prepare us?

MS. CUBBAGE: I think they're just going to go ahead and start.

MEMBER CORRADINI: Okay.

MS. CUBBAGE: Would you like them to do an accelerated presentation to stay on your --

CHAIRMAN ADBEL-KHALIK: Right now we're scheduled to end at 2:45, but I think we can go until 3.

MEMBER CORRADINI: Good.

MS. CUBBAGE: Okay.

MR. BAVOL: My name is Bruce Bavol. I'm the Chapter PM for this issue, and we'll get right to it. This is Henry Wagage. We have James Gilmer, and George Thomas, who's going to be presenting. And we've got about eight slides to present to you.

MR. WAGAGE: My name is Henry Wagage. We are here to present how the staff reviewed the evaluation of ESBWR long-term cooling following a loss of coolant accident.

We had several interactions with the ACRS on this topic. In December of last year, we made a

detailed presentation to the full Committee on containment long-term cooling. We were unable to close this issue at that time. The reason was that we did not have results of GEH final calculation reflecting the assumptions as described in the DCD. Later we received the GEH TRACG results consisting of description of the plant as described in the DCD. After reviewing GEH long-term containment cooling evaluation, the staff accepted the GEH evaluations, and the issue is now closed.

In July of this year, we made a presentation to the ESBWR Subcommittee on closing of long-term containment cooling issue. These are the regulatory criteria applicable to ESBWR long-term cooling. Using the next two slides, I'll be discussing long-term containment cooling. After that, George Thomas and Jim Gilmer will be discussing long-term core cooling.

MR. BAVOL: I'd also like to inject, this is Bruce Bavol. On the slides, you'll be noticing that on the bottom it says "Official Use Only, Proprietary Information," that information has been verified by GEH not to be proprietary. The whole presentation, that's just for the benefit of everybody else who's in the room.

MR. WAGAGE: The staff based its acceptance of GEH containment, at least in part, on our confirming the calculation done with MELCOR computer code. This plot shows an enlarged view of events occurring during the first 72 hours for main steam line break bounding analysis. Seventy-two hours correspond to the highest peak on this red curve. The events shown here from left to the right, top vent opening releasing steam and uncontrolled gases from the drywell to the wet well, isolation of the reactor pressure vessel, initiation of GDCS flow to the vessel, in break actuation sending some of the non-condensable gases and steam back to the wet well. The assumption of boiling in the reactor pressure vessel, and PCCS start up, and starting of PCCS vent fans at 72 hours.

The next slide I'm comparing MELCOR component analysis results for dry well pressure to the GEH TRACG results. TRACG is shown here for analysis using the conditions and assumptions as described in the ESBWR DCD. We have a fairly good agreement between MELCOR and TRACG results for the first 72 hours. Immediately after 72 hours, when vent fans start increasing the heat transfer rate from the PCCS, resulting in rapid drop of containment pressure.

MELCOR predicts lower pressure drop than TRACG. This difference can result from differences in heat transfer caused by deviations in distribution of non-condensable gas in the PCCS tubes, as calculated by the two codes.

Following the pressure drop after 72 hours, MELCOR results show steady pressure, and TRACG results show gradually decreasing pressure. Apart from the pressure drop at 72 hours, MELCOR and TRACG results have reasonably good agreement. Both MELCOR and TRACG results are below the containment design pressure. Based on the staff review of TRACG evaluation, and staff's confirmatory MELCOR calculations, the staff determined that GEH long-term containment cooling evaluation acceptable.

Next, George Thomas will discuss ESBWR long-term core cooling.

MR. THOMAS: My name is George Thomas. I want to talk about the core cooling water. First, I want to talk about the GDCS pool. We've got stainless steel liner and the top, the ceiling between the top wall on the ceiling is very small, and there is a small opening there, call it perforated steel, and got a very small -- small size of only 1.5 inches. So there is no --

MEMBER BLEY: I thought they said it was .8 meters above?

MR. THOMAS: Yes, I said --

MEMBER CORRADINI: No, but you've got .8 feet.

MR. THOMAS: Yes, in feet.

MEMBER CORRADINI: Well, is it meters or feet? I think is what --

MEMBER BLEY: They said meters earlier.

MR. THOMAS: Okay. I will check that.

MEMBER CORRADINI: You need a little --

MEMBER SHACK: How about the holes in the perforated plate at 1-1/2 inches?

MR. MARQUINO: I defer to the staff. I was going by their slide when I incorrectly remembered it as meters, not feet.

MEMBER CORRADINI: Okay. Let's try the other dimension before you leave that microphone.

MR. MARQUINO: Okay. The 2.5 millimeter was on a GE slide.

MEMBER CORRADINI: Well, I think what we're trying to make sure about is just to be consistent. It's .8 feet is the clearance into the region of the drywell where the GDCS pool is located. That's correct. Are we correct in assuming that?

MR. MARQUINO: Yes, and I'll check on both of those numbers for you.

MEMBER CORRADINI: Thank you.

MR. THOMAS: The copy of the 4.4-23 and they show the number, .804 feet and 1.5 inches right here.

MEMBER CORRADINI: Okay. Thank you.

MR. THOMAS: Okay. Now, because of this, we think there is no potential for significant accumulation of debris into the GDCS pool. Okay. Now I want to talk about the suppression pool. This also -- stainless steel liner, and you've got the strainer for the pump system, and there is a periodic cleanup of the suppression pool by the pump system. So, normally, the water quality of the suppression pool will be much better than in the current operating plants. Okay.

Now I want to talk about the alternate sources other than these two pools. The CRD pump, you can inject into the reactor. It's about 1,000 gpm, and the tank's typically about 300,000 gallons normally, so it's a big pool of water, very clean demineralized water is available. And it is located outside the containment. Also there is a connection between the fire system and the FAPCS, so as a last resort you can

even inject water through to the reactor.

So now Jim Gilmer will talk about the core cooling aspect of this issue.

MR. GILMER: Good afternoon. I was lead reviewer for the downstream fuel effects for the ESBWR, as well as TRACG computer code.

Staff, basically, agrees with GEH that the water level for any design basis accident will always be above the top of active fuel independent of debris blockage. And the staff did have a concern of -- a couple of concerns. One was what is the effect on the critical pole through the limiting bundle. There was actually a calculation that GEH performed that is not mentioned earlier, which developed a plug for in that orifice blockage or percent blockage versus -- for the inlet orifice, and for the lower tie plate. I did not include that as a slide, because it was proprietary --

MEMBER BANERJEE: The third bullet here, are you going to speak to that?

MR. GILMER: Yes.

MEMBER CORRADINI: So you can't, or you didn't show it because of proprietary nature, but can you say again what you reviewed? I didn't completely understand.

MR. GILMER: Yes. We asked in I believe several, not one, of RAI 4.423 to provide staff a curve of what percent blockage could, or what -- would be for various percent blockages.

MEMBER CORRADINI: Okay.

MS. CUBBAGE: That RAI response was provided to Chris, and we could show you at the break.

MR. GILMER: Right. There are actually -- the original RAI 4.423, as well as four supplements. And I believe you have all of those.

Mr. Marquino mentioned earlier that the outcome of that -- demonstrated that you could take up to about 75 percent blockage of the limiting bundle, and still have acceptable mixture. So, that was the first calculation, and then the second one, Mr. Marquino also talked about the concern of the blocked channel group, the 16 bundles, what happens with the spill flow from the top from the counter current flow, so the TRACG calculation shows that actually the peak clad temperature is the initial temperature. Okay? And that was on a previous slide presented in the GH--

MEMBER BANERJEE: So, how much material is required to form this blockage? One of the issues that arises with BWRs is it needs very, very little to completely block a channel.

MEMBER CORRADINI: Say again, Sanjoy.

MEMBER BANERJEE: How much material is required to block? I mean, that's the estimate I've been trying to find.

MR. GILMER: We did not quantify that. We just assumed the loading channel group, and block it 100 percent.

MEMBER BANERJEE: Right. As you know, downstream effects in the core are very complex. Sometimes you see blockage at several levels, and sometimes you see it at one level. Sometimes you see it at the inlet, sometimes you see it up in the channel.

MEMBER CORRADINI: Sanjoy, if -- -

MEMBER BANERJEE: I'm asking how much is needed to block one of the channels.

MEMBER CORRADINI: I don't think they know.

CHAIRMAN ADBEL-KHALIK: If one were to do a simple calculation, and assume that you 1,000 gpm water coming in, and that water is coming down the downcomer and up through the core and lower plenum, the average inlet velocity in the core is less than one centimeter per second. And, therefore, I would suspect that anything suspended within that water that's coming in would, ultimately, settle in the

lower plenum, rather than accumulating on the filters. The velocity is just way too low.

MR. GILMER: Actually, ESBWR is better in that regard than conventional BWRs because the upward velocity would be like a factor of four lower than --

MEMBER BANERJEE: So, the upward velocity would be what, centimeter per second?

MR. GILMER: Approximately. And keep in mind that it would be mostly RMI shards, which probably gravity would offset the upward flow, so most of it would tend to accumulate in the --

MEMBER BANERJEE: And there wouldn't be much fiber?

MR. GILMER: Well, it was limited to, I believe, one cubic foot consistent with the Owner's Group --

MEMBER BANERJEE: So, there's one cubic foot in the core, I mean, in the vessel. Where is that one cubic foot?

MEMBER SHACK: In containment.

MEMBER BANERJEE: In the containment. So, very little of that is in the vessel, itself.

MR. GILMER: Some fraction of it will be -- the assumption in the calculation was kind of independent of the type of debris. It just completely

blocked the limiting bundle.

MEMBER CORRADINI: I think your question, the initial question you were asking cannot be answered, which is a correlation between how much is there to block what it was assumed, which I think is where you started.

MR. GILMER: And GEH has committed the Owner's Group test program, which also is 2011, and because the -- is virtually identical -- well, it is identical for the lower top region, in that orifice, and the grid spacers, we believe that any indication or conclusions from those tests would be applicable to the ESBWR, or would bound the ESBWR because of other reasons, such as this design does not uncover the core. And you have only RMI, some latent debris, and the upper velocity is low compared to conventional BWRs. And, also very limited access pathway into the GDCS pool.

Now, I believe Supplement Three of the RAI 423 did actually consider inadvertent actuation of the -- motor -- and there's, again, sequence in there. I think Mr. Marquino mentioned that, effectively, we would not inject into the core until about 150 seconds -- when the vessel pressure drops down to the point when the pumps can offset it.

So, basically, on that bullet in the slide, staff concluded that core cooling can be maintained even with the limiting bundles between the block. The TRACG calculation did actually consider the up flow of the blow off and then the down flow from the upper plenum from unblocked bundles -- and, also, the same TRACG was used for the model we -- limiting steam break -- the confirmatory calculations that have already been discussed.

So, in conclusion, we believe the ESBWR design is acceptable for the GSI-191 concern with considering the commitment of the future Owner's Group.

MEMBER BANERJEE: So, suppose instead of the lower tie plate, the first spacer was 100 percent blocked, would you come to that same conclusion?

MR. GILMER: I believe yes because if the bundle is blocked from the bottom at any location, you will still get cascade flow from the top, from --

MEMBER BANERJEE: Well, the first spacer is 100 percent blocked.

MR. GILMER: Yes.

MEMBER BANERJEE: Would you still think it would be --

MR. GILMER: We have not done a detailed --

model for that specific scenario.

MEMBER BANERJEE: Did you do any confirmatory analysis of this?

MR. GILMER: No, we're relying on the GE calculation. Now our Office of Research did do some Trace confirmatory calculations, and one of the Subcommittee meetings we -- they presented the -- comparison of the -- versus the built-in correlations in Trace. And I didn't bring it, but that was not for a blockage scenario.

MEMBER CORRADINI: Sanjoy.

MEMBER BANERJEE: I feel uneasy about this whole thing.

MEMBER CORRADINI: I sense that.

MEMBER BANERJEE: Yes. I mean, it's not -- I was hoping it would be put to bed.

MEMBER CORRADINI: I want to make sure that first we ask -- make sure the staff, if we ask questions of the staff, and then we can either take the time now or later when we discuss where to go with this. But do we have questions for the staff? John?

MEMBER STETKAR: Not for the staff. I have a clarification from GE.

MEMBER CORRADINI: Well, Wayne. Staff can stay, Wayne get to a mic. Sorry, please get to a mic.

MEMBER STETKAR: Dr. Shack raised the question, and we had some discussion about timing and operator proprieties, and things. And your Slide 5 says "fuel in auxiliary pool cooling system RWCU can provide low-pressure injection from either the suppression pool, or the condensate storage system." I didn't remember an injection suction line from the condensate storage system, and I've been looking for one for the past 10 minutes, and I can't find one. Can you tell me how you can line up low-pressure injection from the condensate storage system through either RWCU or fuel in auxiliary pool coolant?

MR. HAWKINS: Let me look on the --

MEMBER STETKAR: I know CRD. You mentioned CRD, but that's a small capacity --

MEMBER CORRADINI: So, that's a point -- that's a question he's going to have to investigate.

MEMBER STETKAR: That's a question for clarification, only because -- but it could be an issue in terms of looking at how the operators would align things.

MEMBER CORRADINI: Other questions for the staff while Wayne researches John's question?

MEMBER BANERJEE: I actually have a question for Wayne.

MEMBER CORRADINI: Go ahead, Sanjoy.

MEMBER BANERJEE: Wayne, the question I asked, maybe I didn't get a clear answer was, suppose we had 100 percent blockage at the first spacer, then would you be able to meet cooling requirements, or not? Maybe you answered that question.

MR. MARQUINO: It would depend -- well, I didn't give you a yes or no answer. I said it would depend on CCFL breakdown at the -- for the water coming in from the top, and that depends on the timing, also. Because you progress out in time, your power generation in the channel is dropping, and your steam generation is dropping, and it's possible to get that flow back in the top. So, we have not done an evaluation of what time in the LOCA you could tolerate 100 percent blockage somewhere in the bottom of the fuel channel.

MEMBER BANERJEE: So, if this was a very short time, it would set my mind somewhat at rest. If it was a long time, the condition continued, that would be a different matter.

MEMBER CORRADINI: I want to understand your thinking process. You're thinking about if you had a blockage, and then you have counter current flow that would replenish the

MEMBER BANERJEE: Oh, no.

MEMBER CORRADINI: Oh.

MEMBER BANERJEE: He's explained it very well, actually, because there is no exact answer to my question. But after that time when you are in trouble, and when you're out of trouble, how long, is it minutes, is it seconds? That's what I don't know, is it an hour?

MR. MARQUINO: I can't guess at it.

MEMBER BANERJEE: Yes. So, I think that is sort of the issue. It would be different if it was a couple of minutes, instead of three hours, or something. All right. I think you have tried to answer it, but there is no clear answer.

MEMBER CORRADINI: Other questions for staff? And we have a couple of clarifications for John, and I think, Sanjoy, you had one relative to -- I have written it down somewhere, but I think John's clarification we have yet to get. Right?

MEMBER BANERJEE: Well, other than just to know how much would pass through the --

MEMBER CORRADINI: I'm sorry. And there's -- I don't think there's going to be a clear answer for that here. There is no experiment to answer that question.

MEMBER BANERJEE: On these filters.

MEMBER CORRADINI: On these filters.

MEMBER BANERJEE: Yes, but there are answers for other types of filters.

MR. MARQUINO: There was an RAI asked by the staff that I can refer you to with more details on the debris loading on the suction strainer.

MEMBER CORRADINI: Is this RAI 4.4023 as we've gotten some supplements of it, Wayne?

MS. CUBBAGE: 6.2173?

MR. MARQUINO: It was 6.2173, I think. And Part J of it included the suction strainer MPSH pressure drop from debris.

MEMBER BANERJEE: That was based on these old experiments you referred to. Right?

MR. MARQUINO: Yes.

MEMBER BANERJEE: So, at that point, there was no measurements made of what went through, as well.

MR. MARQUINO: Yes, the focus is on blocking the strainer, and the pressure drop caused by that. Yes.

MEMBER BANERJEE: All right.

MEMBER CORRADINI: If you want that, Sanjoy, we have it for you, if you want to look at it,

the RAI which he spoke of.

MEMBER BANERJEE: No, I'm not concerned. I think the pressure losses are not going to be very bad.

MEMBER CORRADINI: Thank you very much to the staff. I'm going to turn it back almost on time to the Chairman.

CHAIRMAN ADBEL-KHALIK: That's okay. Thank you. Well, at this time, we will take a 15-minute break. We will reconvene at 3:15 to go to Item 5 on the agenda.

(Whereupon, the above-entitled matter went off the record at 2:58 p.m., and went back on the record at 3:12 p.m.)

CHAIRMAN ABDEL-KHALIK: We're back in session. At this time we will go to Item No. 5 on the agenda, License Application for the Mixed Oxide (MOX) Fuel Fabrication Facility and the Associated Safety Evaluation Report. And Dr. Powers will lead us through this.

MEMBER POWERS: At this point, we're going to switch gears rather radically to go to a completely different facility licensed under a completely different set of regulations. And that's going to pose a bit of a challenge to the Committee and to our

presenters because whereas some members of the Committee were present when this facility first came to us for the construction from that. Most of the members this is all going to be very new to you.

What we are discussing is the MOX Fuel Fabrication Facility and as many of you undoubtedly know this is a facility to fabricate mixed oxide fuel for use in commercial reactors where the plutonium content of that fuel comes from the nation's weapons grade plutonium stockpile. And the facility is to purify that plutonium and then convert and make the mixed oxide fuel.

It is a relatively small system. It requires -- The process does require that the plutonium be purified but not purified as you would spent fuel. It is purified of a small amount of americium contamination and perhaps some gallium contamination, relatively small, maybe a few other things. It's not a complete fission product load like you would in the case of reproduced fuel and a relatively small amount is going to be processed something along the order of a little over 30 metric tons.

Consequently, it is a relatively simple purification step. The fuel fabrication step is not

wildly different than you are familiar with for most fuel fabrication plants.

The facility is patterned I would say after a facility that has been operational for spent fuel fabrication in France or maybe patterned is not the right word but inspired by the French facility. So it is not like it's an ad hoc sudden appearance of a processing facility out of nothing. It in fact has somewhat of a pedigree.

The waste from the facility will in fact be transmitted and given to the Department of Energy. So our concerns over waste coming from the fuel processing facility is somewhat limited.

The challenges that the facility posed, of course, are like many fuel reprocessing facilities. There are issues of criticality and there are issues of fire. Criticality is, of course, a disciplined field and many of the criticality concerns can be handled in a conventional field. The one exception to that I think is the issue of plutonium hydroxide precipitation in the process.

Fire, the potentials for fire in this facility arise because it's a solvent extraction process so that it has a hydrocarbon that's combustible. Many of you are familiar with the red

oil issue. Some are familiar with hydroxylamine nitrate issues. Ammonium nitrate. There is potential for cladding metal fires. Hydrogen azides.

These and many of the other issues were raised when the Committee first looked at it at the construction permit side and we asked the applicant to address those issues. We held a subcommittee meeting in which the applicant went through in some detail on how he had addressed those issues.

What our objective today is in fact to review the staff's SER of what they're doing for the licensee for this facility. However, the licensing process is a little strange here in that it seems to go on forever and licensing is not immanent here. This is a critical part in the process. I think what we should look for is making a judgment of whether this facility can be constructed and operated with no undue risk to the public health and safety.

Now public health and safety is a complication. The facility is being located on the Savannah River site which means a member of what we generally consider of the public is displaced a substantial distance from the facility. But for the purpose of this I think it's useful to consider the employees at the Savannah River site not directly

involved in this facility to be the public.

Okay. As I've said, this is radically different from a reactor. It's a license under a radically different regime. I have asked the staff and the licensee to come and give us more, a fairly high level of background issue presentation here. I've asked them to cram ten pounds of information into a five pound time slot and given them also no guidance on how to do that.

And so I hope the Committee with bear with them. They've done the best they can under an impossible situation. With that, let me turn to the staff. Is there -- Did you want to make some introductory stuff?

MEMBER RAY: Who's the applicant?

MEMBER POWERS: Well, the applicant is --

MEMBER RAY: I read the logo.

(Laughter.)

MEMBER POWERS: I'll let the applicant explain.

MEMBER RAY: Is it supposed to be a secret or what?

MEMBER POWERS: I will let the applicant explain all this. It is -- The facility is being developed for the Department of Energy under a

consortium of individuals.

Did you want to make some opening comments?

MR. CAMPBELL: I'll make it. This is Larry Campbell. I'm the Branch Chief of the Mixed Oxide and Deconversion Branch and Fuel Cycles. To answer your question, MOX Services is the applicant and MOX Services will be making a presentation today.

First of all, a lot of time, a lot of effort, both by MOX Services and the staff over the last several years. As a matter of fact, I can remember not even being in NMSS and assisting on preparing the review plan about ten years ago when it started.

So today we hope to answer all your questions and at the end of presentations we hope that the Committee has a very warm feeling that our SER and our conclusions we've reached that they are appropriate. And with that I guess MOX Services will make a presentation followed by the staff.

And again we had two days of presentations before the Subcommittee. We addressed several areas. And I feel that was successful and hopefully we will get the Committee's approval to proceed with the issuance of the SER today keeping in mind that the

security portion will not be discussed here in this presentation.

Thank you.

MEMBER POWERS: An additional introduction, the regulations require the ACRS to review the safety issues of that and because of the context of the wording and whatnot I've kind of made a judgment that we're looking not at the security issues, but really the safety, classic safety, issues of that.

With that, I think we can -- Sven, are you going to start us off?

MR. GWYN: I'm going to introduce things and then Sven and Scott and Bill are actually going to do all the real work here.

MEMBER POWERS: All right.

MR. GWYN: My name is --

MR. HENNESSY: Before we get started, MOX Services is an LLC consisting of mostly two-thirds Shaw owned, Shaw Group, the old Stern Webster organization, and one-third AREVA organization.

MEMBER RAY: Thank you. That's what I was looking for. How long has it existed?

MR. HENNESSY: Since the beginning of the project 1999.

MR. GWYN: My name is Deatis Gwyn. I'm the Licensing Manager. For our portion today, we're going to go over an overview of the MOX facility. Sven Bader is going to go over the aqueous polishing part of the facility. Scott Salzman is going to go over the MP. Bill Hennessy is going to give you a very high level overview of the process we use to develop the Integrated Safety Analysis. And as sort of alluded to earlier, there was some issues or questions at the CAR and we're going to provide sort of a capsule summary of some of those at the end. Sven and Scott are going to do that.

With that, I'm going to turn it over to Sven Bader to go over the AP process.

MR. BADER: I'm Sven Bader. I've been on the project since its inception in 1999. Had a lot of hair at the beginning. A little less now.

(Laughter.)

The AP process is probably the most interesting portion of the whole facility, but it takes up a very small fraction. It's represented by the tank blocks. The next slide, Deatis.

The overall outline of the MOX process is basically we start off with the PuO_2 which is from two feet stocks of the PDCF, pit disassembly and

conversion assembly, and the alter feedstock. The pit disassembly and conversion facility --

MEMBER POWERS: You may want to explain that pit facility is a DOE facility that supplies this material and not a part of this application.

MR. BADER: Right. And it's not built yet. So we're working from an alternate feedstock to start with. It's material that DOE has on the shelf that we feel is capable of being processed through our facility.

The PuO --

MEMBER SHACK: Could you handle real MOX? I mean, real MOX. You know a feedstock coming from a light water reactor fuel.

MR. BADER: No, not right now because we don't have any design for fission products.

MEMBER SHACK: Okay. I mean you were -- There's no cooling tanks for fission. There's no chopping unit.

MR. BADER: No.

MEMBER POWERS: This is very substantially simplified relative to handling fission product laden material.

MR. BADER: I believe a shielding though is designed still to maintain the shielding equivalent

that we would need for fission products. But we just don't have the front end of that process that they have at La Hague.

PARTICIPANT: Reactor grade.

MR. BADER: The PuO_2 will then be dissolved --and I'll go through these in a little more detail -- through a nitric acid bath in an electrolyzer. Then we'll purify to remove the americium and gallium principally and then separate the uranium in another step.

Then we'll convert it from P. nitrate to P. oxalate. And then the Pu oxide in a CalSil furnace. From there we'll get powder. And then it goes into the boring MP process which Scott will discuss here in a little bit. We can go to the next one.

This is an overlay. Why don't you go to the next one. We're going to keep that slide up over here. So I'm going to walk through this while Deatis tries to keep up with the process description.

We start up in the upper lefthand block here which is the dechlorination and dissolution and the slides in the middle describe the dechlorination and dissolution. Basically, the feedstock comes in. We pour it into an electrolyzer and depending on the

contents which we've analyzed up front you know we don't let the PuO_2 until it meets our specs into the process.

Once it meets the specs, we know the chlorine content. It dictates what the next steps are. If there's a high chlorine content, we'll put it into the dissolver. Before we add any silver, we will run the electrolyzer to remove the chlorine through the dissolution process.

Then we'll add the silver nitrate, continue the electrolyzer and eventually we're putting the Pu into solution. And it becomes Pu_6 valance state nitrate.

The chlorine that is removed from the process gets treated and in the end comes out as sodium chloride. The plutonium that's been dissolved with the silver gets adjusted with hydrogen peroxide. The hydrogen peroxide will reduce the Pu from six to four valance state and the silver from two to one. And principally the silver reduction is for corrosion reason, to minimize corrosion. All this equipment up to this point is made out of titanium.

The uranium isotopics are then adjusted for criticality reasons for the down process when uranium gets separated from the plutonium.

From there -- again switch slides -- we go to the purification process which is the most interesting portion of the whole facility when the main chemistry occurs. The plutonium and uranium are first extracted in pulse columns. They're what we call raffinates which is the gallium and the americium and the other material that we don't want in the Pu field, the MOX fuel in the end. The plutonium and uranium and I'm following the main blocks here. This is the main plutonium feeds path. The plutonium is in scrub from aluminum nitrate, complexing fluorides that might have been extracted. Plutonium is then stripped. This is where we separate the uranium from the plutonium. We add a hydronium nitrate solution to the process putting the plutonium into the aqueous phase.

The plutonium is then -- and we're changing the valance state there from four to three. We then come to the plutonium stripper column. Sorry. That is the stripper column. Then we go to the uranium scrubbing column which will be used for certain alternate feed that has a lot of uranium in it. This is basically another organic scrubbing here.

We then convert the plutonium from valance state, oxidize it from valance state three back to

valance state four. Still in an aqueous solution. And then subsequently there was the conversion unit. The next slide.

We're first going to check to make sure that we have reduced the plutonium and that we've removed all the reducing agents, the hydrazoic acid, the HAN, and that we don't have Pu(VI).

We then add oxalic acid to the process. We're converting the Pu from Pu nitrate to Pu oxalate. It's then going through a rotating filter with the oxalate itself. It's been described as yogurt type texture. It's now collected by the filter and then dropped into the furnace.

The furnace then as far as the oxalate ion it's got an oxide feed to it and oxidizing plutonium to a Pu oxide. From there, we then go to the canning unit, the homogenizer, where we sample to make sure we have the correct material and make sure the moisture content is correct for criticality reasons in a storage unit downstream from that.

There are some support units as well. Then we'll go to Scott's unit. We'll talk about that in a minute. But I wanted to cover a couple of support units because these are kind of important in some latter discussions we'll have regarding red oil.

We had a solvent recovery unit. We don't use the solvent once. We do recycle in the process. And to do that, we need to remove all the degradation products that have occurred from the radiolytic decomposition.

So we treat this in the solvent recovery unit. It's mixer/settler with several stages. And I should point out the uranium has already been separated as well here. There's a uranium stripping column here. So basically this unit, this display, here is this unit right here. Uranium is removed with a dilute acid solution and put into the aqueous phase and then that's sent off to a waste unit.

The solvent treatment unit goes through mixer/settler -- go back one, Deatis -- where we're going to end up removing these degradation products and those include the aside ions and the dibutyl phosphate and monobutyl phosphate and then everything that falls below that. And the hydrazoic acid itself is treated, converted into sodium azide and then it's treated into the waste unit.

From the conversion unit, we also have a unit that's recovering any excess acid that came out of that unit. And the reason we're talking about this unit is there's an evaporator in this unit. And so

later on when we talk about red oil this is one of the eight areas where there's a concern because this is an elevated temperature unit. The bottom line here is we have sampled up front to make sure the organic doesn't reach her, this change in strategy from what we had in the construction authorization to what we have now in the IC summary.

This unit basically is destroying the oxalic ions. The concentrates where any plutonium that might have leaked through are sent back to the front end of the purification cycle, back to the extraction. The distillates are basically acid and they're sent to the acid recovery unit which I believe is the next slide.

The acid recovery unit is kind of a collect-off of acids from various units in the process. The main feeds though are from the purification process. This is where the raffinates have gone, so the gallium and the americium. And then also the distillates from the oxalic mother liquor recovery unit.

In this unit, what we're doing is we're recovering nitric acid to recycle it back into the process. And we do this through three stages, two evaporators and one rectification column. Excess acid

from this unit would be sent off to the waste unit.

Another important unit related to venting is our offgas unit. This unit is a continuously operating unit supported with diesels. It is very highly instrumented to make sure our pressures are low in the process equipment. You know the philosophy on the confinement is basically wherever we have the plutonium the pressure is the lowest. And that way all the flows are inward and not outward. The KWGs I believe draws the strongest vacuum in the facility and the debate is if the glove box units draw a stronger vacuum.

The unit has got several IROFS. Those are our important items relied on for safety. Sorry. So I think it's different than what you're used to in the reactor world. And as well as providing this low pressure we're also cleaning the off-gases to remove any kind of NOx fumes that are coming off our dissolution units principally. Also describe any kind of plutonium that might have been entrained in the release of the gases.

And then finally we have our waste unit. We have -- It's one main waste unit. It has three main liquid streams: the high alpha waste which is where the americium and the gallium have gone, the stripped

uranium which is basically the uranium that was in the original feed that was diluted in the dissolution unit and then separated in the purification process and then low level waste which is a collection of different waste streams from the labs principally and it's mostly from rinsing areas.

So these terms, low level waste, we don't actually do any classification or categorization of the waste in our facility. They are all sent to the Department of Energy through a waste acceptance criteria.

I think that's --

MEMBER RYAN: Just for clarity, I think it's fair to say that those definitions don't necessarily line up with 10 CFR 61 or other NRC classifications.

MR. BADER: Correct. Correct.

MEMBER RYAN: Okay. Thanks.

MR. BADER: And I think that's it.

MR. SALZMAN: We're on the dry side of the process. My name is Scott Salzman. I work in the Nuclear Safety Group.

A general block diagram here just to give you an idea of our work areas here. We have a receiving, a powder area, a pellet and assembly, rod

assembly areas. So what we do we receive plutonium oxide and depleted uranium dioxide. We down-blow the plutonium to a given percentage. We press out pellets, load them in a rod and assemble that together in assembly, package it up and send it out. And I'll go through each one of these areas as we go along.

As I think somebody already said, our reference facility is a MELOX facility over in France. So we're kind of patterned after the MELOX facility.

Receiving area, we'll start there. We receive depleted uranium dioxide and plutonium dioxide from offsite. We store those. We empty those -- We store those containers, empty those containers, get ready to make powder. 3013 cans, we store those, assay those, get ready in preparation for making powder and go onto the --

Here's a little block diagram of our receiving work unit. Our transportation come in. We receive depleted uranium dioxide in 55 gallon drums. It comes in and stored in our secured warehouse.

We move that as we need it from our secured warehouse over to the main building. It's stored in a buffered storage near the drum emptying unit. Those cans are then opened in the drum opening unit, introduced to flood boxes and are introduced to

powder area.

The plutonium dioxide comes in on SST, safety secured transports. They're in 9975 shipping packages and they're in a DOE 3013 container.

We bring those into the main building. We unload the shipping packages, bring those on in to the PuO_2 receiving area. There we unload the cargo restraint transports. Take these 9975s. We unpackage those, unbolt those and remove the nested containers. Remove the 3013 package. That's put on a conveyor and run into the 3013 storage there. And it's a storage area where we assay those cans, do some calorimetry and some gamma counting. And we get ready to introduce those in the AP process down there in the aqueous polishing.

Bypass the aqueous polishing which we just did we take our polished plutonium oxide powder. That goes into PuO_2 buffer storage. It's in two and a half kilogram reusable cans at this point. It's stored in our buffer storage and then we'll transport -- we'll move those over into the powder area to start making our powder.

Our powder area main functions we see the uranium dioxide and plutonium dioxide powder and produce a mixture of plutonium content suitable for

whatever campaign we're running. We blend that down to 46 percent depending on what we need to do there.

Powder block diagram. From the receiving area, we shuttle the reusable cans. Two and a half kilogram cans of plutonium dioxide go to can emptying. We remove the tops and we put those on a tilter. They get dumped into a dosing hopper into primary dosing.

The primary dosing also received depleted uranium dioxide and some scraps as we recycle those from the facility. We blend those into primary dosing to about a 20 percent plutonium dioxide percentage. That's our master mix.

All these units in the powder area sit outside in big jar storage units. It's a big storage unit where we have 80 kilogram, 60 kilogram, jars. They're criticality safe jars and they run on conveyors in and out of the jar storage of these primary units on each side.

So once we get down-blend to 20 percent, we also add some zinc stearate in the primary dosing for pellet presses. It's a lubricant for pellet presses.

We go to balling milling next. These J60 jars or 60 kilogram jars are attached to the ball

miller and we mill the plutonium to get the proper grade characteristics. It's depleted uranium mill balls. It comes back out of there and into final dosing.

Final dosing we blend more scraps and uranium dioxide to get down to our final plutonium dioxide content, our final plutonium content. At that point, we're back in the jar storage and then onto homogenizing pelletizing. At homogenizing pelletizing we add a pore former. We do a final homogenization of powder and that's fed to the pellet presses where we punch out green pellets. Those are loaded onto molybdenum boats to get ready for centering to pass on the pellet area.

The scraping processing, the scrap milling, the scrap processing box where we process scraps. We can crush rejected pellets. Those will get milled to the proper frame characteristics and then those are added back into the process. Okay.

So once we have our powder, our pellets pressed out, we have several storage areas. We sinter those pellets. We inspect the pellets and store them to get ready to make rods.

Pellet block diagram. It's -- This process area rotates around three storage areas.

Green pellets storage, sintered and then ground and sorted. So coming in from the powder area over here on our left, they go to green pellet storage in molybdenum boats. Those boats are fed into -- We have two lines of sintering.

They're introduced into a sintering furnace where they go into a preheat section about 950 degrees. Basically, removes the organics into a sintering section about 1700 degree where we -- They're in a reducing atmosphere about four to five percent hydrogen and then argon and a cool down section.

We cool down out of the end of the furnace, in the sinter pellet storage, then onto grinding. There's a sinter grinding wheel where the pellets are ground down to their required diameters and on into the ground pellet storage where we do some -- There's inspection and sorting units where we inspect the surface and diameters and lengths. And then there's a quality control where we actually sample some of the pellets for plutonium concentrations and other pellet ceramic characteristics.

Once we have good pellets, ground and sorted pellets, we come out and go to the rodding

area. At any point in this process where we reject pellets, we come back to the scrap pellet storage and those pellets go on back to the powder processing area, that scrap processing, that little box, where they can be crushed and recycled back into the process.

Onto the rod area, we load our pellets into a rod. Their end fittings are attached. We weld them up and evacuate and fill them with helium.

The rod block diagram, from the pellet area, we have rod cladding and decontamination. This is where we bring the trays in and it's all in glove boxes. They introduce the rod blanks. We bring the pellets in the pellet trays and they form a stack and line up the rod. The stack is pushed into the rod. Then we take that rod and we install end fitting and spring and goes to a welding glove box where we weld the end fitting on.

Then we do a seal weld where we evacuate the rod and backfill with helium and a little seal weld is made. It goes onto a decon and contamination checking where we clean up the rod. Once we verify that it's free of contamination, the rods come out of the glove box. This rod tray loading, we load the rods on the rod trays and they go into the storage

area.

Now working in and out of the storage area, we have several test units. We have a helium leak test where we load the rods into a pressure chamber. We evacuate the pressure chamber and check for helium which gives us an indication we have a leak in rod.

Then we go to an x-ray inspection. They basically x-ray the rod and make sure the pellet stack is correct, the spring is in there, the seal welds are good, plume length. Everything is good.

It goes to rod scanning where they scan the rod for plutonium content and make sure that's all squared away. And then it goes to a rod inspection. There are some laser inspections there and some visual inspections.

And once we clear the rods, we're back into the rod storage area. These are all in big rod trays moved around as one tray, 32 rods to a tray.

We're onto the assembly area. The assembly area is where we take all our individual rods and assemble them into a fuel assembly. That's where we receive the rods, put them altogether with assembly components, inspect them, storage them, package them up and ship them out.

Assembly block diagram. From the rod area we go to assembly mockup loading. That's where we based on our run sheet and our campaign we bring in rod trays to make up an assembly. Those rods are pulled into a mockup. It's basically a 17 X 17 grids where we load the rods into a mockup.

The mockup is then moved up to an assembly table where on a big jig we have the grids all locked in place on these assembly table. Fingers go through and pull these individual rods from the mockup in through the grids.

On the assembly table and assembly fabrication unit once all the assemblies are pulled through we pull the keys on the grids, attach the end fittings top and bottom. And we up-end the completed fuel assembly. And they move around on an overhead trolley by this big assembly area.

We up-end that thing and we carry it over to dry cleaning where we lower it into a pit. And high pressure air blows any contamination or any small filings we would have from the pulling process. Those are cleaned out there.

We bring it back out of there. We go to a couple inspection areas. The assembly dimensional inspection we check for verticality, parallelism,

envelope length, water gaps. They have some gauges that they use there. There are some mechanical sensors and some lasers do all the acceptance checks on the assembly.

Then it goes for a visual inspection where an operator with a camera inspects the assembly. There's an IAEA plutonium probe that gets inserted at that point for IAEA accounting purposes.

Once we have the fuel assembly inspected and cleared it goes into an assembly storage and we have areas where we store these rods. And as needed we pull them out of storage.

They're brought in on the same monorail into the assembly packaging area. We have a big turntable that sits vertically and there's a strong back on that turntable and a position for three assemblies. We bring an assembly up to the strong back, lock it in place and turn it and we load three rods that same way. Once the strong back is loaded, we down-end the strong back.

It gets slide horizontally into a shipping package. The shipping package is then bolted up and we install impact limiters and load that onto a truck and onto the reactor.

MEMBER BLEY: You just said something I

didn't remember hearing you talk about in the subcommittee. Although NRC will be issuing you the license, you also have IAEA safeguards on the facility.

MR. SALZMAN: Yes. There's an IAEA representative.

MEMBER POWERS: And we have not -- As you know, we have not explored that aspect at the facilities.

MEMBER BLEY: And other facilities we have don't. I don't know what kind of an agreements exist that don't come under IAEA. We do it ourselves. But here we're doing it.

MEMBER POWERS: Well, we do get inspections from the IAEA for nuclear facilities and process facilities. In fact, I believe Calvert Cliffs is undergoing its IAEA inspection this year or in the next 12 months or something like that. But we don't ordinarily don't get into that.

MEMBER BLEY: But we don't have the safeguards and all of that stuff and on reactors.

MEMBER POWERS: Yes. And on this facility we have not looked at that aspect of the problem.

MR. CAMPBELL: Yes, this is Larry Campbell. Under PART 75 it's not unusual to have IAEA

at more and more facilities. As a matter of fact, I think we're in the process of a PART 50 plant will have an IAEA observation there for a considerable amount of time. So for fuel fab facilities I think the regulation is PART 75.

MEMBER BLEY: Okay. But this -- Well, we haven't looked into it, but just for information. This will be kind of the standard IAEA safeguards monitoring full-time.

MR. CAMPBELL: For MOX I'm not aware. I can't answer that question.

MEMBER BLEY: Okay. That's all right. It's not crucial to what we're doing.

MR. SALZMAN: We have officers and an office. We've provided an office for IAEA.

MR. BELL: My name is Gary Bell. I'm with MOX Services. The IAEA inspection is primarily for validation of the bilateral agreement with the Soviet Union. So it's not their full IAEA service. They do it in a normal MOX plant.

MEMBER BLEY: Okay. So you don't have all instrumentation and the cameras and all that kind of stuff.

MR. BELL: Just to confer our meeting of the bilateral agreement with the Russian Federation.

MEMBER BLEY: Okay. Thank you. Go ahead. I'm sorry.

MR. HENNESSY: Next, integrated safety analysis process. I'm Bill Hennessy, Manager of the Nuclear Safety Group. And we do an integrated safety analysis because that's what's required by the regulation, 10 CFR 70. And that provides a systematic approach to identifying all relevant hazards that could result in unacceptable consequences. And MOX being basically a chemical facility, we use a lot of the chemical industry guidelines and procedures for safety analysis, preliminary hazards analysis, hazops and what ifs.

And the purpose is again to conservatively evaluate the hazards and identify appropriate protective measures. And these are what we call IROFS, items relied on for safety. It could be safety systems or components or could be administrative procedures that are around safety.

The ISA is also as we've done is an also very comprehensive process. Now we started up from bottoms up, a broad based PHA, preliminary hazards analysis, and look at everything we could possibly find as a potential hazard. As the design matured and we had more detailed design documents, say, PNIDs, we

did things like hazops and what ifs to a great extent. These are very intense team efforts. Maybe participate in the hazops -- a dozen guys, experts on the technology and safety, and it lasts for two to three weeks.

And I just want to mention that we've spent over $80 million doing this ISA. Now it's roughly equivalent of say 45 full-time equivalents over ten years, and we still maintain it. We'll maintain it for the life of the facility. So it's a very extensive effort.

We've evaluated hundreds of glove boxes in Scott's area, the MP area, and hundreds of vessels in the AP area, columns and some -- all kinds of things. And we --

MEMBER RYAN: Bill, I'm sorry. I just want to ask you. As you go through on our earlier two-day meeting, you pointed out several choices and decisions you had made along the way based on some of that ISA work, you know, picking this over that and this component over that. If you could maybe just highlight those, I think it would help the Committee understand how you've applied it in this case. So just a thought.

MR. HENNESSY: I think we'll get into that

when Scott talks about their specific issues.

MEMBER RYAN: That's where I remember it.

MR. HENNESSY: Yes.

MEMBER RYAN: I think it's helpful just to have those --

MR. HENNESSY: Right. A list that's set up, a hierarchy, yes.

MEMBER RYAN: -- examples where you pick one over the other.

MR. HENNESSY: Priorities, right.

MEMBER RYAN: Thank you.

MR. HENNESSY: And during the hazop what if process, we looked at many thousands of events scenarios and process deviations is a very extensive, broad-based approach to safety. We really left no stone unturned for doing the hazard analysis for this facility.

The ISA is required by 10 CFR 70.62 to demonstrate compliance with the performance requirements of 70.61. And these are three bullets there, high consequence events are made highly unlikely, intermediate are made unlikely, criticality events are prevented.

Now the consequence definitions or terms here are all defined by the regulations. They're

defined in terms of radiological limits. It's 100 rem to the facility worker for highly unlikely, 25 rem to the public, and also some chemical limits. We use TEEL limits as a criteria. There's a radium intake limit and also an environmental limit where you compare our releases to Part 20 limits, not limits, but the values presented in Part 20.

The frequency terms, a highly unlikely definition is not defined by Part 70. It's left up to the applicant to define that and he can define that in a quantitative manner or qualitative manner. And we define it in a qualitative manner. And we define highly unlikely as event scenarios that have to meet the following set of criteria for a set of IROFS applied to that event scenario.

And these are the criteria that we define for highly likeliness. Now the IROFS have to meet the single failure criteria or double contingency. They have to meet our QA program which is based on Part 50 as well as NQA-1, on an Application of Industry Codes and Standards, ASME and IEEE and a set of management measures. Most importantly to us is the surveillance of the IROFS so we can provide failure detection and repair of an IROFS if it goes down.

Single failure criteria or double

contingency is very important except potentially against single failure vulnerabilities. Implementation of the 18 point criteria in our QA program ensures reliability of IROFS now from the design process through procurement, fabrication, installation and operation.

Application of industry codes and standards ensures that the IROFS will perform its safety function. For example, IEEE 384 protects the power cables from faults. And management measures ensure availability and reliability of IROFS. It's not only surveillance, but also involved procedures and training and so forth that go into that. But it also ensures availability and reliability of IROFS by verifying that the IROFS are operable. You know, going through this regular periodic surveillance process to ensure that your IROFS are functional. And this also reduces the probability or frequency of the event occurring.

ISA methodology major steps, obviously you know you need to determine the hazards. You know internal to the facility we start out like I said with broad base PHA, look at a wide range of IROFS or hazards AICHE checklist approach. This is done on unit by unit basis and we're looking for fissile

material naturally but also other radioactive materials and americium specifically.

You're also looking at chemistry, the chemical limits associated with the regulations. You also want to know where the locations of these hazards are and these energy sources.

As I mentioned as the design matures we went into more detailed design information. So we did more detailed safety analysis using hazops and what-ifs. This is really the heart of our ISA process. Like I said, these are very intense workshops, unit by unit, where we had roughly a dozen design people as well as our safety people and also operation experienced people from MELOX and La Hague just marching through the facility going through thousands of potential process deviations and upset conditions.

MEMBER STETKAR: Bill, I didn't make it to the subcommittee meeting. So I don't know if this came up. You mentioned a systematic process going through unit by unit. How does the ISA look at integrated effects across the whole facility? Your second bullet there mentioned natural phenomena. But I'm think about the effects of storm, seismic events, perhaps fires, perhaps other types of hazards that could affect operations among several constituent

units.

MR. HENNESSY: Right.

MEMBER STETKAR: Simultaneously.

MR. HENNESSY: Right. Well, I'm just talking about internal hazards first there.

MEMBER STETKAR: Okay.

MR. HENNESSY: And I haven't gotten to the next two tick marks yet.

MEMBER STETKAR: I'll let you.

MR. HENNESSY: Obviously, we do look at natural phenomena. We look at seismic. That's an input to not solely for the structure, but also all our IROFS are considered for design earthquake condition. If they had to operate after or during the earthquake, they're designed for the full earthquake condition.

We also look -- We followed the staff reg guides on natural phenomenon hazards and we looked at the wind load, of flooding and so forth just sort of as the standard nuclear facility would look at it as well as external manmade hazards. We look at the potential explosions offsite for example. So it's all worked into the design of the facility and design of the structure as well as the IROFS themselves.

During the hazops, we develop potential --

we develop the event scenarios for the causes of the hazard and this provides us a basis to determined the consequence and assessing or likelihood of potential events. So then we just march through and come up with consequence and likelihood of the event.

If the result is unacceptable, if we see unmitigated circumstances, if the result is unacceptable, if we see 100 rem to the worker, then we apply IROFS to the event to make it highly unlikely. Not only IROFS but there are four criteria that we apply with the IROFS to make the event highly unlikely. To provide also the IROFS safety function for the design people to properly spec out the IROFS.

Then we demonstrate that the IROFS will perform its intended safety function when necessary and we march through the 70.61 performance criteria and we march through those four design criteria of single failureness and double contingency and also ensure the availability and reliability through those other design criteria.

And the ISA is a never-ending process. You know we still have a large team that we look at potential changes to the facility as we go. Look at -- working heavily these days with the operators, develop procedures and develop essentially we don't

call it tech specs but essentially what's called, what is, tech specs. And this will go on for the life of the facility and to the operation and also the decommissioning process.

MEMBER RAY: A comment on inspection and enforcement.

MR. HENNESSY: Say it again.

MEMBER RAY: Could you comment on inspection and enforcement?

MR. HENNESSY: In what respect?

MEMBER RAY: Well, you talked about the requirements that were established and normally when you have requirements there's somewhat of inspection that enforces the requirements on the operator.

MR. HENNESSY: Well, on the operator, do you mean by the staff's inspection?

MEMBER RAY: The licensee. What?

MR. HENNESSY: It's a staff inspection enforcement process. Right now, we have regular inspections but by Region II. They come out and --

MEMBER RAY: Okay. That's all. Just a regular. Same thing as a power reactor.

MR. HENNESSY: Absolutely. We have site -- Two site inspectors, one very experienced, a senior site inspector and Region II comes out it seems like

every other week and does inspections.

MEMBER RAY: When I first asked the question, it sounded like you hadn't experienced that. But that's not the case. You're like anybody else who is a licensee which is inspected and enforced.

MR. HENNESSY: There is something --

MEMBER ARMIJO: But they inspect against what? Your ISA summary or some other. That's all you submit, right? You submit a summary to the staff and they inspect to the --

MR. HENNESSY: The license -- I'll let the staff. This is different.

MR. TIKTINSKY: Dave Tiktinsky with the staff here at Headquarters, the project manager. Region II has got an extensive inspection enforcement program. There is specific procedures that are laid, inspection procedures of what they'll look at during construction and during the life of the facility. It's similar to all other fuel facilities that are subject to an inspection enforcement.

So as they're constructing, we have resident inspectors. There are teams of inspections looking at components, looking at vendors, looking at receipts of items and all of the aspects of quality assurance. So that's been ongoing for multiple years.

It will go through construction, through operator readiness. There will be inspections related to that for they would eventually allow to operate and then during the whole life of the facility.

MEMBER BLEY: But the ISA is not part of the license.

MR. TIKTINSKY: And as of right now they have a construction authorization. So what the inspection is against is against what's in the construction authorization, so the aspects that have to be from that that are in that document as well as the requirements of NQA-1.

MEMBER BLEY: How about when they become operational?

MR. TIKTINSKY: When they receive a license, it will be inspected against whatever conditions are set in the license. So the license application, Part 70 is unique because there is a license application, an ISA summary. The ISA summary although it is required to be submitted is not part of the license application, so the license application itself which contains the commitment.

So if you read the license application, it would say they're going to meet a code, a standard. They're going to do particular things. That would be

the enforceable document after we issue a license.

MEMBER BLEY: And just for others who have said you have a summary, if you haven't read it, the ISA summary is some 4,000 pages long.

MEMBER POWERS: And really, really boring.

MEMBER BLEY: One could say that.

(Laughter.)

MR. GWYN: That wasn't intentional.

They were trying to make your question harder earlier, but if so as Bill mentioned, we have two full-time resident inspectors on site.

MEMBER BLEY: I heard that.

MR. GWYN: And we had 12 other inspection teams during this past year that ranged from three to eight members during those inspections.

MEMBER RAY: You're located in the wrong spot.

MEMBER ARMIJO: Since your -- Just in passing, since your owner or client who is DOE, do they do any kind of inspection or they're just programmatic? Are you on schedule and on budget or do they do anything related to safety at all?

MR. BADER: They do quite regular -- They don't call them inspections. They call them assessments, but they do quite -- they do regular

assessments both for the project and also for our vendors also.

MEMBER ARMIJO: Okay. That's good.

MR. BADER: Dr. Stetkar, sorry if I butchered your name, but I think you asked a question about these global -- We do have fire hazard analysis as well.

MEMBER STETKAR: You do?

MR. BADER: A seismic safe shutdown analysis and --

MEMBER STETKAR: Does the fire hazards analysis -- And forgive me for being completely uninformed. Does the fire hazards -- What I was more concerned about was do those analyses look at the entire facility in some sort of integrated sense such that you look at a fire or a seismic event or a natural phenomenon or something like that would simultaneously perhaps affect process flow streams within multiple units or whatever you call the various --

MR. BADER: Yes.

MEMBER STETKAR: Rather than individually saying "Okay. This unit is fine. It's protected against fire." And not necessarily looking at some sort of integrated sense.

MR. BADER: From a fire standpoint, Scott will be the expert. But we compartmentalize our fires. We have very small fire areas in our facility. But we do have a fire safe shutdown analysis that we've done because we do have IROFS and common areas and we look at the impact of a fire on those.

And then during the hazops another difficult with the -- with doing this on a compartment, unit-by-unit basis is the interface is between the units. And we also have -- You know when we did the evaluations of the hazops, we specifically brought in the next unit people at the end of the hazop to look at the interface issues in that way.

MEMBER STETKAR: Okay.

MR. BADER: We weren't losing those as well. So you'll have events produced one -- You know you'll have a deviation of one unit that will cause an event downstream.

MEMBER STETKAR: Okay.

MR. BADER: A good example of that would be that uranium that we add up in the dissolution unit here which has put a criticality down here. And that's actually a very large gap in the units there.

MEMBER STETKAR: Good. Thanks.

MEMBER BLEY: We had some questions about

fires in the woods that come not too far away from the site and could that lead to any problems with these wind takes and the like? I'm not sure we clarified that completely at the last meeting.

MEMBER STETKAR: I'm thinking also I have no idea how the power distribution network. I'm assuming these are not independent in terms of an electric power supply and that sort of stuff.

MR. BADER: Do you want to address that one?

MEMBER STETKAR: No, keep you on schedule.

MR. BADER: Okay. All right.

MEMBER POWERS: In your absence, we did explore this fairly thoroughly.

MEMBER STETKAR: Good.

MEMBER POWERS: And I mean their fire hazards analysis was reasonably classic in its nature. Their electrical supplies are diverse. I mean there was nothing.

MEMBER STETKAR: It's not a reactor and it's not a reprocessing plant that has all this waste that needs cooling. So mostly if you can turn things off you're home free.

MR. BADER: Yes. It's process flow streams I think is probably more --

MEMBER POWERS: I would say -- I mean one of the aspects of this facility that's really unusual so that they have to account for interruptions in the processing. Interruptions can occur both in the feed in and on the waste receipt end and that probably is the most striking feature about this facility relative to most and I think they've done a pretty good job.

I mean they're not idiots. They recognized that this was going to happen and they've handled it with basically a strategy of clean the system up if they have a protracted shutdown. I mean it's done pretty well I think. I mean it's as good as you can do I think on handling that aspect of a problem.

MR. BADER: And we'll actually address that. That's just two slides we have on that.

MEMBER POWERS: Yes. I mean it's really the unusual feature of this thing and you just have to take into account because stuff happens in this world.

MR. BADER: During the construction authorization, a letter was written to the ACRS and there were several concerns that were shared with them. One of them was red oil. In addition, there was DPOs out there for red oil. And what I've thrown up here is just a real brief synopsis of the things we

had from about 100 odd slides that could get presented if you really want to listen to details about red oil.

But the bottom line is red oil is a result I believe of an organic nitrate acid interaction and it's been characterized as what's left over after you had the explosion. So you clearly do not want to have red oil in our facility. It's not something red that we're pouring into the process.

What we did is we shifted from what we had in the construction authorization to the ISA summary to this strategy here and the shift was really a product of not being able to simulate what we thought we could do during the construction authorization. Basically, modeling a full evaporator, an eight meter tall evaporator full of organic, and then also instrument it as well so that it's reacting for a temperature ramp increase which will happen during start up and shutdown. Start up only. Sorry. Not shutdown.

It was just too difficult to implement effectively. So what we did was we went back, looked at the DNFSB letters, Defense Nuclear Facilities Safety Board letter on red oil, and looked at La Hague and the way they implemented strategies against this event. And what we have here reflects that

essentially.

So there are three principal strategies and fortunately this figure is still up. The areas that are dashed -- I failed to point this out -- are organic. So we do have organic flowing throughout our process. In those areas, what we have applied is known as a heat transfer strategy. Basically, we have organic in here that has a fairly, a relatively low flammability limit and 60 degree C, 55 degree C.

And so if you look at red oil phenomena, it is generally witnessed to be above temperatures of 120 degrees C. One hundred and thirty degrees is what the DNFSB said. We can debate that number later.

So wherever we have organic we're essentially limited in temperature already by existing process controls for this solvent issue of lower flammability limit (LFL). And we have sufficient cooling on the vessels from the geometry of these vessels just from the room air. We make sure we don't ramp up the temperatures in that above 60 or in the neighborhood of 100 degrees C.

In addition, for those areas where I was just talking about this eight meter evaporator, it's in the acid recovery unit. You see we don't have any dashed lines going there and that's intentional. We

don't want to put organic into these evaporators. Now we can't preclude that organic from going there because organic is soluble in the aqueous phase up to about 200 milligram per liter. And if you let it run in this evaporator forever it will start accumulating over time or could accumulate over time depending on how you run the evaporator and you're emptying it and so forth.

So what we have done is we precluding organic from reaching here as best we can by sampling the solution as it's moving from what we call in the purification process to the acid recovery unit as well as in the Pu conversion unit so that we don't have -- There's another evaporator in the oxalic mother liquor unit.

And since we can't eliminate it all, you know, our sampling limit is 50 milligram per liter. La Hague sees about 20 milligram per liter in the aqueous phase maximally. Our safety limit is 50. We will periodically clear out all the equipment that we're precluding any accumulation of the organic in. Right now, it's bi-annually minimally.

MEMBER POWERS: That is really the -- I mean I would have put it on the slide because that really is a crucial step because all indications

historically are it's the accumulation of the material that kills you on this red oil issue. I mean it's another piece of empirical evidence, but it's one I don't think the DNFSB has given enough emphasis to.

MR. BADER: Yes, in the DNFSB to their credit did also emphasize don't put it any concentrated acid in and we heeded their advice. So since this is our acid recovery unit we are getting concentrated acid here. So it really is up to us to make sure that we don't put organic in there.

Now there's also a philosophy that if you have a vent that's of the right size you can put whatever quantity of organic in there. And the problem with that if you do get a runaway reaction you're getting a lot of volatiles that have very low flashpoints and flammability limits, the butanyls for instance. So we are not relying on that strategy at all.

MEMBER BLEY: Well, but you are maintaining the vent capability.

MR. BADER: We are a defense in depth which will be clear on the next slide. Yes, we didn't abandon the philosophy. But from a demonstration standpoint we think it's a lot better to do the prevention process from an IROFS standpoint.

This last strategy, the evaporative cooling is actually -- is probably really the issue as well with the evaporator. We're going to limit this organic quantity to 34 liters maximally in any single vessel. And even with 34 liters you could have a runaway.

So what we have is put in some features to make sure that if the temperature starts rising above a certain level that we have actions either automatic or operator actions to take place. And the reason we have potentially operator actions is because it's a very slow phenomena. We have a model for this. We've done extensive modeling based on a lot of lab data that's out there.

So it's not a new phenomenon. It's been around for quite a long time. In fact, I believe the first event was in the '50s. Every decade they have one of these events. India was the last.

And so we had these operators take action because it's such slow event. And when I say slow we're talking six hours minimal probably up to hundreds of hours potentially.

The last point here is that we really felt that everything we have applied in this facility meets or exceeds anything that the DNFSB had written up for

red oils in the DOE facilities. And we have to remember that the DNFSB was kind of back-fitting. So we had the privilege to be designing a facility so we can put all these back-fits into the front end of this.

What I want to show here and it was kind of hard to condense everything and I apologize for all the wordiness. But we don't rely solely on IROFS here. The process is designed to ensure that IROFS are not challenged. So you really would have to have a normal process deviations and several process deviations in most case occur before you can challenge an IROFS.

We have the philosophy that failure of a normal system is likely. So the way we define likely Bill alluded to and I'm not going to go there.

The three different strategies are listed here. Basically, we have a diluent wash column wherever we are preventing organic from going to a tank that's about to be sampled and then downstream to an evaporator. We have diluent wash columns which are instrumented. They have interface controls. They have flow controls to make sure that the diluent is coming in and removing any kind of entrained organics.

For the heat transfer strategy, we have

numerous normal controls in the process. It's a very heavily instrumented process. And there are also pressure controls to make sure we're not building up any pressure in the process.

For the evaporative cooling, again we have another diluent wash column in front of these evaporators and then in the same type of controls that we have for prevention.

We have redundancy in our IROFS. We put the sample there for prevention. The density is also there for prevention. These are redundant density transmitters located above an intake. So as the tank level is decreasing and you're trying not to send or you're preventing organic from going up the intake line, the density transmitters would trip that flow prior to the level reaching down below. It was also trip once it becomes uncovered.

There are temperature credited throughout. Those are mostly for the LFL issues. And then we have vents and level measurements to ensure that we don't have less than a one-to-one ratio in the organic and aqueous for the evaporative cooling strategy which we didn't really talk about. It's one of the IROFS in that section.

In the event that the normal controls fail

and the IROFS fail then we have a fourth layer of protection here which is dependent on the strategy. But for the prevented units where we're trying to prevent organic from going down to there are one of several factors involved there. There's either no heat source in the vessels or there's no concentrated acid in the vessels and/or you can credit the organic from potentially being steam stripped on the way down to the evaporators.

For the heat transfer and the evaporative cooling, as Dr. Bley alluded to, we still credit venting. So for the creditable quantities, organic that can reach these vessels. We did not assume that they were fully organic though. That if we did get the creditable quantity and it did run away, we are still vessel vented through the vessel a vent line to the off-gases to which I described earlier.

Finally, if all that fails, we have the robust confinement barriers. These tanks are all located in process cells, inaccessible rooms, foot thick walls that have their own separate ventilation system which goes through HEPA filtration unit. And that's all for red oil.

MEMBER POWERS: One of the issues we did not cover that we probably should have covered a

little bit is the issue of ammonium nitrate.

MR. BADER: Yes, I'm trying to -- Paul, do you want to speak to that? We had a separate discussion about this one.

MR. DUVAL: Paul Duval, Chemical Safety. Ammonium nitrate is found as very, very small subcomponent that happens as a result of hydroxylamine nitrate and nitric acid actually bypassing, going through one another in REDOX reaction going all the way to exact extremes on the oxidation states. And so they're an exceeding small part of what you get in normal REDOX reactions.

MEMBER POWERS: The trouble is it goes up and accumulates in the venting lines over a protracted period of time. And so you worry about its accumulation in your vent systems and things like that.

MR. BADER: And the only defenses I have for the vent systems themselves is they're all slopes. So there's no pockets and liquids to gather. And all the gases are drawn out by the ventilation system itself or by the IROFS exhausters which are controlled by the IROFS pressure monitors.

MEMBER POWERS: They're going to accumulate on your HEPAs as particulate.

MR. BADER: It's particulate. Oh, on the HEPA filters?

MEMBER POWERS: Yes.

MR. BADER: And then we -- Okay. So in that case from a HEPA filter standpoint if we do get accumulation there I'm not sure what the event is that we're exactly worried about.

MEMBER POWERS: Ignition.

MR. BADER: Ignition. Yes, we do have redundant HEPA filters in separate fire areas. So you know that would be -- Brian.

MR. STONE: This is Brian Stone. Sven, you might want to mention about the design of the ventilation and the demisters and the decon that we have on that system.

MR. BADER: Okay. Each vented tank before the gases can go to the off-gas system it has to go through a demister. The demisters are periodically cleaned with decon solution to sent anything back into the process that might have been captured by the demister that did not drain immediately from the demister. The demisters are each drained back to the process.

MEMBER RAY: What does a demister do? What does it take out?

MR. BADER: It's basically a -- it depends. They're -- they have odd geometries. But it's a layer of trays and as the gas comes through we're basically looking for the impact on the surface and condensate anything that might have been entrained. And they all slope. So when you get a lot of collection it will start draining down to the bottom of the demister which is -- it's hard to give you a generic description because it's all unique.

MR. FOSTER: This is Bob Foster, MOX Services. A typical demister is like a flat box for criticality reasons. Inside that flat box are veins. I would call them veins and so as the gas is coming up it hits the vein and the intention is to --

MEMBER ARMIJO: Like a steam dryer.

MR. FOSTER: -- separate the --

MR. BADER: A good analogy is to a steam dryer.

MEMBER ARMIJO: Okay.

MR. FOSTER: So it's a separator.

MEMBER ARMIJO: Yes. Got it. And you collect the stuff that comes off and you worry about criticality and --

MR. BADER: Because it could plutonium that might be entrained.

MEMBER POWERS: The trouble with demisters of course is that they're meant for relatively large droplets on the order of 20 to 50 microns. Whereas the ammonium nitrate particles are going to be around 0.1 microns. And they're just going to go right through it.

MR. BADER: And I haven't gotten to the other stuff that's out there.

MEMBER POWERS: Like weight.

MR. BADER: From there the gases then go depending if it's a NOX would go to a NOX scrubbing column which is basically a dilute nitric acid spray on the solution. If there's not NOX which is where the ammonium nitrate is going to be forming, not the NOX areas, those will -- Actually the demister -- Those will go to a gas scrubbing column which is also one of the acid NOX scrubbing columns.

MEMBER POWERS: And that will get your ammonium nitrate.

MR. BADER: And then from -- That all drains down to the KPC unit for reprocessing, recycling. I'll avoid the reprocessing. Sorry. And then from there --

MR. HENNESSY: Let me emphasize it a little bit. I mean we do have two HEPAs in series.

Both IROFS to both --

MEMBER POWERS: You just don't want ammonium nitrate to get there. This gas handling is the stuff that will do it for you.

MR. BADER: And just before I get to the HEPAs, yes, there's another demister and there's a condenser. Sorry, a condenser and then a demister. And then go through a heater and then finally get to the HEPA filters and we have four sets. You know they're in parallel, two sets in parallel, before we get to the stack. So it's actually a long run of pipe that goes to the MP side of the facility where the stack is located at.

MEMBER ARMIJO: Is the MELOX facility have a similar type of gas treatment system?

MR. BADER: I have to distinguish. Scott mentioned that MP was designed after the MELOX. The AP is actually designed after La Hague.

MEMBER ARMIJO: Whatever the French experience.

MR. BADER: Yes, there are a lot of similarities. One thing that's dissimilar is that the French rely on natural convection drawing. I mean they have exhausters, but they're not safety exhausters like we have because they're relying on the

stack and then on natural draw, natural circulation, out of their process.

MEMBER POWERS: This is a better system.

MR. BADER: We hope so.

Okay. All right. Hydroxylamine nitrate. Another exciting explosion. This is an autocatalytic event. Again we shifted the safety strategy here. In this case, we did a very extensive analysis. I think this is where Bill probably wants me to go through example of what you were looking for, Dr. Ryan, with respect to the hazop.

What we do is produce a model here based on the extensive laboratory data that's out there. It's a very elaborate model of all the reaction rates, the kinetics going on in this and actually thermodynamics as well. And during our hazops, we would go through and we would assume everything is unmitigated. So we assumed deviations in the process fluid entries, rates, loss of flows, etc.

And from that if we were to add conditions that were susceptible to an autocatalytic reaction we then made an action item which would go to the model. The model would go, produce the results, come back to us, say this is what you need to limit. And the next slide will show the limits.

But before we go there you know it was an integrated system. So we were making sure that everything we were identifying during the hazops is addressed in the code modeling. And then the code modeling would tell us what are the limits we had at our IROFS. So we had controls on HAN concentration, nitric acid concentration, flow rates and temperatures. Those are the four principal parameters. And then in the areas where we don't expect plutonium we also credited the plutonium separation.

Go ahead to the next one. So for this area the deviation from the construction authorization was in the construction authorization we corrected or credited hydrazine in the process. We had a couple deviations where we could conceivably have used up all our hydrazine. It's never been seen before at La Hague, but it is from our hazop a conservative approach in our hazops. We had certain process deviations that could sit there and eat up our hydrazine. They were mostly static conditions.

If the hydrazine is not removed from the process, you will not have any chance of getting hydroxylamine nitrate autocatalytic reaction because basically what the hydrazine is it's taking any

nitrous acid, an excess nitrous acid in the process and reacting with it and creating hydrogen aside or hydrazoic acid which begets a whole other problem we dealt with separately. So for our first layer now which is non IROFS is where you could credit the hydrazine in the process.

From there you go to the normal process controls. So you're where we have IROFS temperature controls, we have normal process temperature controls before that would trip before the IROFS would trip. So you'd have to a loss of hydrazine and a loss of these normal controls before you can even get to our IROFS.

So the IROFS themselves are redundant. So they provide the third and fourth leg.

And then again the fifth leg is all this equipment is in process cells so that in the highly unlikely case all these -- or it could be probably defined as non credible case -- but in the highly unlikely case if all these controls failed, the process cell barriers would probably confine any explosion. And then we'd be relying on our process cell ventilation system to filter any release.

MEMBER ARMIJO: Is that really a probably confined or have you designed it with the intention to

confine an explosion?

MR. BADER: We have not gone through that demonstration because it's very difficult because of the number of process cells we have. We've done some initial studies. The initial studies all found that this is going to work.

But the problem is you have a very demanding path before you get to these final filters. What we're worried about is blowing out the final filters. We're not worried about blowing out the walls in the room. There's just not enough energy in these rooms because the tanks aren't huge.

MEMBER ARMIJO: Okay.

MR. BADER: But from a criticality standpoint the tanks are pretty small because of the high Pu content.

MEMBER ARMIJO: Okay.

MEMBER POWERS: Your treatment of HAN has looked at HAN runaway reactions in the process stream itself. When I look at the relatively recent history of industrial problems with HAN I find most of the recent issues that have arisen with the HAN feedstock. How are you handling that issue?

MR. BADER: In those areas, we don't have IROFS because we don't have any plutonium in those

areas and we don't have any -- We have the fire barriers which are so robust. But it doesn't mean we don't look at it. I mean we've clearly looked at it. We have the same type of controls there. We have temperature controls. There's no heated actions up there. There are no catalysts up there which is --

MEMBER POWERS: Emits the iron problem.

MR. BADER: You're right. There is the potential for iron from the corrosion of the stainless vessels. Again we've done an assessment of that because the process has the same characteristics, the same material tanks. So I would say that bounds it in that sense.

And then there's -- What else? There's really not any other issue there that I can see.

MEMBER POWERS: I mean temperature and control of the catalysts are the only things you can do there.

MR. BADER: Yes.

MEMBER POWERS: Because that's all that causes the problem. It seems to me that what I would do if I had to worry about this and I would worry about it because some of those events have been fairly specular is that I'd look at the residuals in my tanks every once and a while to see if I was accumulating

any iron.

Temperature control, yes. I mean you've thermometers. I mean what else can you do.

MR. BADER: And we have no heat. You know there's no reason to heat anything in that area.

MEMBER POWERS: That's right. But it's just -- Am I getting corrosion where I didn't expect it and getting iron into the solution there? And if I am --

MR. BADER: Fix it. Right. And we do -- before we send the stuff to the process we do sample it. And part of the sampling I think it's there --

MEMBER POWERS: And that's probably the best thing you can do right there is just simply your process -- on sampling.

MR. BADER: And again, these tanks are not all that large either.

MEMBER POWERS: Right.

MR. BADER: Even the -- and they're located on the fourth or fifth floor in general. So the plutonium is on the first, second and third floors.

MEMBER POWERS: Yes. Well, like you said, it's -- in the storage facilities.

MR. BADER: Yes. We had done hazops on

the reactant units, too. I should have mentioned that. So it's not that we've concentrated only on the plutonium areas. We've also looked at the other areas.

MEMBER POWERS: I mean some of -- I mean I think in many cases they haven't actually figured out why they got blow ups in the storage units.

MR. BADER: Yes. Scott Barney is not here and he's probably be the one to debate that since he's the resident expert.

MEMBER POWERS: Okay.

MR. BADER: I'm not going to even challenge that.

MEMBER POWERS: I'll defer to him because I mean mine is mostly an anecdotal notice of this. But HAN is a real problem.

MR. BADER: Waste streams, okay. There is -- As Dr. Power has alluded to earlier, one of the issues we have is potentially from the process down -- One of the causes for that is losing our ability to remove our waste from our facility and send it to the DOE complex. There is -- The waste streams that we send to the DOE complex are going to a waste solidification building which is getting built right now. And from there they get treated. They will dry

up.

Some of it goes to an effluent building. The low level waste will go to an effluent building that meets certain criteria.

MEMBER BLEY: But that's not part of your facility.

MR. BADER: That's not part of our facility, right.

MEMBER BLEY: Or part of this license.

MR. BADER: Right. And what I really should point out is that because it's out of our control it could be that it's not available to us. And so what we've done is we've done an assessment. This is one of these more global impact assessment of what happens if I'm not capable of removing waste from our facility.

So we did an evaluation of the whole AP process to look at the impacts and the immediate issues that we found were related to high alpha waste. There's three streams I mentioned earlier, the stripped uranium, the low level waste and high alpha stream.

The stripped uranium is uranium for a low dose conversion factor. So you don't get much dose from that. So a significant accumulation at the

facility can be held at our tanks. We have very large tanks in this area relative to the rest of the process that can handle three months worth of backup in our facility.

Low level waste, they're almost seasonal. They depend on what part of the operating phase we're in. If we've finished a campaign, that's probably when we accumulate the most low level waste from deconning glove boxes and so forth.

But in the high alpha waste unit what we're worried about is overfilling our tanks. And this is high alpha waste going to areas that we don't want it. And so this is americium principally. High dose conversion factor. So immediate concerns to mainly the facility worker, the guy inside the facility.

So what we've done is we have gone through, implemented an IROFS to shut down the process once our tanks in the high alpha waste unit reach a critical volume. And this volume is not full. This is a volume that allows us to empty the rest of the process because there's another concern. If I leave the plutonium with the organic for prolonged periods of time there's degradation going on through radiolysis.

And so what we've designed this IROFS for is to allow us to separate the plutonium from the organic just by running the rest of the process through and empty all the process then of all the solution and send all the organic to the solvent recovery unit which I've described earlier as an important unit because it's cleaning up the organic, removing the degradation products, and then it's also cooling the organic. So it's going to go into a tank where it's cool.

MEMBER RYAN: And one other follow-up questions, have you matched up the waste processing solidification I guess you said it is and their acceptance rate on their product efficiency and with your rates of -- at your facility?

MR. BADER: Absolutely. Yes.

MEMBER RYAN: You have some margin there in case they say they can --

MR. BADER: There is margin. I haven't even talked about the margin. We store -- I'm trying to remember the exact number. Brian, can you help me with that one? Do you remember the exact number of months that we can store a high alpha waste when we're running the full blower?

MR. STONE: Assuming we were empty.

MR. BADER: Yes.

MR. STONE: We didn't have anything in the tanks I think it was 29 weeks I believe.

MR. BADER: Twenty-nine weeks.

MR. STONE: Yes.

MR. BADER: So we keep our largest tank empty because that's the tank we're going to end up sampling and make sure we meet the waste acceptance criteria before we actually send it. So we have essentially a whole tank, a 10,000 liter tank. You have to remember the process tanks are all about 100 liters. They're smaller. So there's a lot of volume there.

And we expect about five transfers a year to the waste solidification building. That's about 7,000 liters or 8,000 liters per transfer.

MEMBER RYAN: So they've got everything -- They've got a couple of months to process 7,000 liters or get them somewhere else.

MR. BADER: Right. And we don't know right now if they have excess tank capacity themselves so that they could take more from us.

MEMBER RYAN: Yes. I mean their ultimate ability to do what I guess they have engineered to do is really going to have a potential impact on you if

for whatever reason they say they can have the flow rate out their door compared to what you can do.

MR. BADER: Right. And ultimately if we run into trouble we'll shut our process down in an orderly manner. We're not going to --

MEMBER RYAN: You made that clear in the last meeting.

MR. BADER: The layers of protection here basically the lines themselves, the waste lines that connect our facility to the waste solidification building are double lined. They're IROFS. They're seismically qualified. They're buried under at least three feet of soil. They are stainless steel. If the inner annulus leaks it leaks to the outer annulus which leaks back to our facility to a leak detection pot. So we would be able to identify if there's a leak anywhere in the piping going from our facility to the waste solidification building. And then our process is designed to meet the waste acceptance criteria that the WSB has set up for us.

The next layer is basically we have an extreme amount of excess capacity in this area. Then we have an IROFS admin controls to shut down the process. Surveillance is also listed there and I probably should mention that one as well. We do like

HAN control nitric acid.

Well, we allow HAN to sit in one spot for a prolonged period with nitric acid, there's a potential for (1) the hydrazine to get all used up and (2) for the process solution to start concentrating. So we do surveillance those tank where we had an IROFS sample applied to that tank to ensure its safety.

Then the actual other issues associated with the safety events basically I mentioned this high level that could cause not only overflow into a reagent unit, but also could overpressurize our tanks. These are very robust tanks. You know the steel is -- I can't remember exactly -- about a half inch thick at least and a lot of the tanks are lined with a separate layer for protection.

The reagent tanks themselves where the back flow would be that's usually a 18 foot head that would have to be overcome. So you would probably be backing up in the process as opposed to backing up in the reagents.

The organic itself is sent to KPB unit. Sorry. I left an acronym in there that wasn't defined. That is the solvent treatment unit which will wash the degradation process and be able to store the organic.

And then ultimately we had no ignition sources. We don't credit that. But all our flow rates for organics are meeting limits such that we don't build up any static electricity. All our tanks are grounded so that there's really no ignition sources anywhere in the process.

And then for the events themselves that require the surveillance from concentrations it's not like we're blowing a tremendous air across these tanks. There is some air going through to remove hydrogen from radiolysis. But basically there's not a tremendous amount of entrainment going on to reduce the volume in our tank. And the process temperatures would basically revert to room temperatures. So the evaporation rate is not very high. It's very low.

And then thick robust confinement areas again.

MEMBER ARMIJO: You have electric motors that run pumps and things like that. Are those not --

MR. BADER: Those are on glove boxes. Yes, anything electrical is not in the process cells. In process cells, we do have piping that goes underneath the tanks that allows us to put a probe in there, a radiation probe to look at maybe hold up in the tank or something to that effect.

MEMBER ARMIJO: Yes.

MR. BADER: But the pipe itself is not exposed to the atmosphere and the process cell. There is no electronics in the process cells. You know the pumps themselves are all in glove boxes and that allows us to be able to do maintenance on them as necessary.

MEMBER ARMIJO: Okay. Do you want to move on, Scott?

MR. SALZMAN: Okay. One of the other issues was fire along with explosions, energetic event, potential dispersed material. So you want to take a look at that and its effects on our confinement systems. Unlike some of our DOE counterparts, we don't have a sand filter for our facilities. So we're looking at HEPA filters and we need to make sure --

MEMBER POWERS: Be very happy you don't have sand filters.

(Laughter.)

MR. SALZMAN: They work pretty good in fire.

MEMBER POWERS: They work well for soot.

MR. SALZMAN: So we spent a lot of time and effort evaluating fires and I wanted to go over a fire in one of our process areas. This is an area

where we would have powder or other plutonium and material inside of glove boxes in one of our process rooms. The process rooms are in a separate confinement area, a C3 confinement area. And outside that, we have our hallways and corridors are C2.

These are just definitions on the potential for contamination. They're a classification for our confinement zones. Each one of these confinement zones is on a separate ventilation system.

Okay. As I said, potential for dispersion, unmitigated consequences are high to the public and operator. And our safety strategy was to limit the size of the fire and subsequently limit the size of the soot and associated effects on the final HEPA filters.

Taking a look at the -- Well, in doing that, so we have fire prevention features that including use of noncombustible construction and controls on transient combustibles and ignition sources. That's sort of our prevention look at this fire to prevent the fire from initiating in the first place.

We have IROFS clean agents suppression systems in our areas with dispersible material to suppress a fire. Those are automatic suppression

systems.

We have the ability to isolate these fires. We have over 300 fire areas. So what we've done is we have a lot of small fire areas. The fire areas are bound by fire barriers, concrete construction in the walls, fire penetration seals, fire doors and fire dampers in our ventilation system. So we do have the ability to close up these fire areas to allow post fire cooling.

And in the end we may -- We do have the ability. We have the ability to apply small amounts of water in specific areas by our fire department if the need arises.

So take a look at my layers of protection. It's sort of our defense-in-depth design principle. As I was saying, our first layer of defense there is basically preventive. And so we have non-combustible construction, control of ignition sources at combustible loadings. We do have nitrogen ventilated glove boxes and you have UL listed equipment.

The second layer is fire detection suppression. In these areas where we have dispersible material we have IROFS detection suppression. Clean agents are discharged in these areas to suppress a fire. There is also fire detection in each glove box.

And we have the ability to manually inject CO_2 into any given glove box to suppress a fire. We also have other standard Class A portable fire extinguishers in the process rooms to allow manual firefighting activities.

To contain our fires like I said we have many small fire areas. Our fire barriers and our confinement system make up these fire areas. So VHB is our exhaust system for our glove boxes. It's an independent exhaust system that exhausts the static through redundant heat filters.

The high depressurization exhaust, that's our exhaust system for our process rooms, the C3 confinement areas. It's an independent system. It exhausts through redundant heat filters.

Then our process offgas -- that shouldn't -- Okay. That's our -- For our process cells, that should be process cell exhaust system. I think that's a little typo there. In our process cells, we also have an independent exhaust system that exhausts the process cells to redundant heat filters.

Once we get out of the process room into our C2 areas that would be the corridors, the stairways, and your access to the various process rooms, we have another medium depressurization exhaust

system. That exhausts through redundant HEPA filters.

And our fifth layer, we have the Savannah River site fire department. They're tied right into our fire control panel. An alarm at our facility alarms at the fire department. They can be there and ready to go in about 15 minutes. They're right down the road and they'll be operational at the site. That fire department will be -- We'll have a prefire response plans that will be put in place that dictate how they go through the scrub at the facility and the location of hazardous materials, fission materials, radiological materials. They'll dictate what personnel protection is required, whether it's SCBAs or other clothing. What fire suppression types will be allowed when we go down through the facility and it discusses communications, rally points, so on and so forth to sort of coordinate the Savannah River site fire department.

MEMBER ARMIJO: Do you have in your analysis ever had a situation where you may have to evacuate let's say a chemical process area because of a fire? And is there a time that you can be away from this process where things remain stable and you need to have a lot of margin there where you can basically bail out of those areas and be okay without people

having to do something special?

MR. BADER: For the AP process there is no human interface required.

MEMBER ARMIJO: Okay.

MR. BADER: And so it could continue. But it really depends on where the fire is at. I mean the fire if it damages an IROFS for instance we have buttons to shut down process unit in the control room. I guess my point really is that we really don't have people in there and they might be doing surveillances. Actually, we do have surveillances. So, yes, they would be evacuated.

MEMBER ARMIJO: But they're not really needed there except through a control room.

MR. BADER: From a process safety standpoint, they are not needed there.

MEMBER ARMIJO: Okay.

MR. BADER: An ultimate is a safe shutdown system which is basically a system that puts all IROFS in their fail safe position.

MEMBER ARMIJO: Okay.

MEMBER BLEY: Sven, you mentioned earlier. People are going to hate me, but I have to ask this. You've done a detailed fire hazard analysis. Something that's creating a lot of headaches in the

commercial business, fire analyses these days, is the evaluation of so-called spurious actuations or hot shorts or whatever jargon you have heard them called. In other words, a fire in an instrumentation control system that doesn't cause an open circuit or a failure of something that is operating.

MEMBER BLEY: Immediately.

MEMBER STETKAR: What?

MEMBER BLEY: Immediately.

MEMBER STETKAR: Immediately. Something that might cause a valve to open that's supposed to remain closed or that might maintain a piece of equipment operating or cause unexpected types of control or actuation signals. Have you looked at or thought about those types of fire induced control system faults or could be protection? Could be control?

MR. BADER: I'm going to leave this to Scott. But let me answer in one way because in our hazops we assumed flows from unexpected areas. If there was a pipe connected to a tank we assumed a flow there inadvertently. When the tank is at its worst conditions you suddenly add something else. So from a process standpoint, from a red oil explosion or something, we would have addressed it.

But now you're actually talking --

MEMBER STETKAR: I can tell you. I'm talking about control room and spurious operational.

MEMBER BLEY: Well, there's even -- There's a little nasty niche to this because eventually these will end up as open circuits. So they could get a short long enough to open a valve and then the circuit is open and you can't reclose it.

(Simultaneous speaking.)

MEMBER BANERJEE: Hazop would consider that, wouldn't it?

MR. BADER: The hazop looks at spurious operation. It does --

MEMBER STETKAR: Assuming you can put it back to normal or not.

MR. BADER: No, not necessarily.

MEMBER STETKAR: It just says if this happens.

MR. BADER: The reason I had the qualifier is because it depends if it's an IROFS or not.

MEMBER STETKAR: Okay.

MR. BADER: If it's a normal process we assumed it. If it's an IROFS we have an redundant one and from a hot short standpoint I don't know if you want to bail my butt out a little bit here because I'm

not a hot short expert.

MR. SALZMAN: We have taken a look at hot shorts, fire induced spurious actuations and our main defense against hot shorts is our separation of trains.

MEMBER STETKAR: Okay.

MR. SALZMAN: And so what we're doing as we're taking a look as we identify IROFS we take a look at the effects of a hot short and we'll have these trains separated. We meet the IEEE -- what it is -- 364. Yes, we're meeting the -- We're going to meet the requirements of IEEE 384 for separation.

MR. GWYN: Rex wants to say something.

MR. WESCOTT: Hi, I'm Rex Wescott, Fire Protection Engineer for staff. And, yes, I think what Sven said is it probably has been looked at in hazops analyses, at least, to a point. Looking at spurious actuations is a criteria for the fire hazardous analysis. It's set down in the SAP.

And it think what we're expecting -- Well, when I reviewed the fire hazard analysis, there really -- at least I couldn't see any analysis of spurious actuations in there. Of course, we really didn't expect any because we didn't think there was a potential.

But I think what MOX is going to do and has made a commitment to us to do is to go back and look at what they've probably done so far in their hazops and also where they may find areas where they haven't specifically looked at this and I think carry it forward into the fire hazard analysis or at least that's what we're looking for. We haven't got a specific commitment yet. But I think that's what we're going to finally look for is to see the spurious actuations carried forward in the fire hazard analysis where they can put in the context of combustible loading and suppression and that type of.

MEMBER STETKAR: What I was looking for was to see if -- There's in the commercial nuclear plant licensing process there's a regulatory guide, Reg. Guide 1189, that basically says you have to demonstrate a safe shutdown capability given a fire in any fire location or zone. And the assumption is that that fire can produce any number of spurious actuations. And as long as you have adequate separation, adequate protection, of that safe shutdown capability and whether that same type of thought process had been exercised when you did your fire hazards analysis and set up your fire zones.

MR. BADER: There's a little uniqueness

here because usually in the reactor world I believe if you impact something that's safety related it has an impact over the whole plant. Whereas if you impact something safety related for here it's very compartmentalized. You're only affecting one part of the process.

And just to be clear about what I was saying, if it's a non IROFS, we assume it's failure in the hazops. If it's IROFS, then basically what Scott says is we're relying on the separation of the two trains.

MEMBER STETKAR: And that's exactly -- That's sort of the analogy that I'm talking about is making sure that if it's an IROFS and you're relying on that redundancy and separation that indeed --

MR. BADER: Right. And you don't assume that --

MEMBER STETKAR: You've done that and you've assumed the failure modes in the IROFS that accounted also for spurious signals.

MR. BADER: Yes.

MEMBER STETKAR: You know they protected against those types of --

MR. BADER: I mean that's part of the common mode issue, right.

MR. SALZMAN: We had a slide at the subcommittee and we discussed that. So I mean the example I brought up when it came to those IROFS that we use for isolation we use air operated isolation valves in a lot of places. And basically they are fail close valves. You lose air. You lose power. They go to their isolate position.

But what we did since we realized that a hot short could keep one of those valves open and although that we didn't require IROFS power to those, we went and put them on our trained -- We went and powered those valves up through our trained buses which then put in requirements to the separation requirements and not just threw them on a normal bus that didn't not require any train. So for a lot of those, that's one example of hot shorts.

MEMBER STETKAR: Good. Okay. Thanks.

MEMBER BANERJEE: I'm sorry I missed the first part of your presentation because I had to be somewhere else. But did you mention whether you did a hazops, an operation hazops?

MR. BADER: It essentially was an operations hazops. We don't have operations yet in HAN. So I can't tell you.

MEMBER BANERJEE: So you don't have

everything yet.

MR. BADER: As part of a continuous ISA process.

MEMBER BANERJEE: Right.

MR. BADER: Once the operations become clear. Yes, we have general layout because we have existing facilities in La Hague that our plant is fabricated after. So we had actual knowledgeable operators from La Hague in our hazops that said, "Oh no. That can't happen." And then we'd say, "Okay. What safety system is preventing that?" And then they would say "Well, it's normal process. We failed it right away which usually antagonized the operator." But we did it and that way we could find out what is safety related.

MEMBER BANERJEE: And you will do an operation hazops.

MR. BADER: We had done one with the outlined operations that we have and then as more operations become available, yes. I mean we'll continue to update what we have. It's a vicious cycle. As detailed information becomes more available the process of updating our documents continues.

MR. HENNESSY: We are doing an operations hazops as we go through tech spec type process

currently. We still have the AP units, but we're working through that process right now.

MEMBER BANERJEE: Are aspects of this batch or is it all continuous?

MR. BADER: It depends on the unit. The dissolution process is batch. The purification process is continuous and the rest, the nitric acid, is continuous essentially five days a week. It varies between process unit. The offgas system is continuous 365 days a year.

MEMBER POWERS: Got to close out on this.

MR. GWYN: We're finished.

MEMBER POWERS: Thank you a lot.

MR. BADER: Turn it back over to Larry.

MEMBER POWERS: Larry and his team will tell us about the safety evaluation report here.

MR. CAMPBELL: At this time, we're going to give you an overview of how we reviewed the application, all the interactions we had and Dave Tiktinsky is the Senior Project Manager for the review of the submittal. And I'm going to turn it over to Dave at this time.

MR. TIKTINSKY: Thank you, Larry. I'm going to go over a little bit today just the purpose of what our presentation I'm making to you is, a

little bit of the background, go back through the whole licensing process, where we've been for the MOX facility and where we're going in the future.

And how I've broken this out since if you've looked at their SER it's 600 pages. We spent two full days in subcommittee and we could have spent weeks going over all the details. So in order to kind of give you a flavor of what we did overall in the process and then we're going to go through a couple of examples of how we did some particular reviews so you can get a feel for how the staff made its conclusions on individual items.

The purpose of the presentation is for seeking the ACRS' endorsement of the draft safety evaluation of the LA to actually be able to complete and finalize it. A more planned schedule is to complete it by December. Again it depends upon what the response from the ACRS in terms of the letter.

A little bit of the process. I may as well just go back to where we started from where the ACRS had before. Back in 2005, the staff had prepared a safety evaluation report on the construction authorization request. We issued the construction authorization.

The ACRS had subcommittee meetings, had a

full committee meeting, back in February 2005. A letter was received as MOX Services talked about some of the items that were in the letter. So that was received and the SER was issued.

The license application and ISA summary were initially issued in September of 2006. So there is somewhat of a gap in between there when the document was being developed. The staff accepted that document for review and in December of that year we began our technical review.

So a lot of what you're hearing here is the results of three and a half plus years of staff review. It was a very intensive review. A lot of very good staff and very knowledgeable staff involved with it.

We prepared the draft SER in June. We have no open items in there. And just to clarify one thing that you heard before talking about the commitments related to spurious actuations. The MOX Services even though you won't currently find that commitment of what to do in the LA, they have submitted some information to say that they will include it in the updates. So they will update their license application and ISA summary basically based after the results of this meeting and any changes that

have to be made. So that commitment is made and will be made in the license application.

Additionally on a side note this particular licensing action is in litigation with the Atomic Safety and Licensing Board. It is a two-step process. The first part was the construction authorization. The second part when the license application was submitted there was opportunity for petitioners to send in contentions. One was accepted. And so there will a licensing board hearing on that contention sometime after the completion of the SER. There also is some other contentions that have been submitted that will be dealt with through the ASLB.

Another part I just want to bring up quickly is an interesting part that's unique to only plutonium processing facilities in the regulations, what are called principal structure system and components. Those were identified in the construction authorization. There were 53 of them that you saw in the construction authorization request. And that was the basis of the staff's evaluation when we issued the construction authorization.

The regulations say that we have, the NRC staff has, to verify construction of those PSSCs as determined before we issue a license. So those PSSCs

of which are varied greatly in terms of what they are, but a lot of them are the structure, their parts of it, their ventilation systems, the criticality systems, for example, those as they're being constructed now and as they're continued through construction estimated through around 2014, as those PSSCs are constructed, the staff is in a verification process. And we will complete that verification process after those are done and issue that -- the plant would be issued a license some time after that step is done.

So that's unique. Other facilities do not have that requirement.

After we have that, we'll issue the license to possess and use radioactive material. We'll also still have some conditions in it related to operational readiness. So the PSSC verification relates to construction. And then there will be an operational readiness piece before the facility will be allowed to operate. And then hot start up will be with actual material.

MEMBER STETKAR: Just I know nothing about this process nor do I know what a PSSC is. Are all of the PSSCs also considered IROFS in the --

MR. TIKTINSKY: Well, it's sort of. PSSCs

are a unique breed. They go -- They vary from things like criticality controls is a PSSC. But also the transport package for spent for the fresh fuel is a PSSC. I mean some of them are administrative controls. It kind of varies.

Some of them are. They're designed at the system level. So IROFS are at component levels. So you think there's kind of a hierarchy of them.

MEMBER ARMIJO: Is the building a PSSC?

MR. TIKTINSKY: The building is a PSSC. But also certain pieces of the building are also PSSCs. Process cells are PSSCs.

MR. MORRISSEY: Ventilation.

MR. TIKTINSKY: Yes, the various ventilation systems. The emergency generators.

MR. MORRISSEY: Glove boxes.

MR. TIKTINSKY: Glove boxes. They're PSSCs. So you can say a glove box. Well, glove boxes are IROFS as a category. But you can go to one of the specific glove boxes that are in the design and that is an IROFS. So you also can think of you get PSSCs kind of the IROFS groups which would be things like glove boxes to specific component IROFS which is the actual thing that they order and build.

MR. MORRISSEY: Okay. Thank you. I think

I got it.

MR. TIKTINSKY: Okay. As part of our SER development we have for reviewing MOX our own standard review plan. That was developed prior to the standard review plans for all fuel cycle facilities. It's NUREG 1718. So that was the basis for both the construction authorization request review and the operating license review.

I'll talk a little bit about just kind of in general what the staff did. And as I mentioned I'll get a little more into the details for some specific cases. But we did what we call in-office reviews. As you've heard there was an ISA summary which is 4,000 pages or so. All the detailed documents that back that up that the regulations don't require to be submitted including nuclear safety evaluations, calculations, all kinds of things, the staff needed to look at that to come to its conclusions. So we did what's called in-office reviews. Basically we met with the applicant looking at those documents, reviewing them.

We had other discussions with the applicant. We had initially from kick-off meetings going through to make sure there was a good understanding of the technical aspects of the

facility. For specific issues that we looked at we had meetings for things like you've heard for red oil and HAN. There were numerous meetings related to discussing the technical details of those.

We had a request for additional information after we did our review. And I'll go through a little bit more of the process there for what we did for request for additional information.

Needless to say we had substantial communications between the staff and the applicant. The approach we tried to take is to make sure. We didn't want to just go back and forth and ask questions. We wanted to make sure there was good understanding on all sides of what our issues were, what the applicant's positions were and made sure there was a good meeting of the minds of what we did.

As part of the review in each individual technical discipline where it was needed, some confirmatory calculations were done. Again this is very specific to particular technical disciplines. And what the staff determined they needed to come up with their conclusions.

We also did a vertical slice review. The vertical slice also varied a lot between areas. If you look at the events that the applicant has talked

about there was a varying of events. I recall they were broken up into criticality and non criticality, things like explosions, loss of confinement events, load handling events. The staff looked at all of the non criticality type events to some extent.

But events like red oil and HAN which has been mentioned are vertical slices. We went very deep into looking at those trying to understand exactly what was there, looking at the documents, and doing our review.

The other thing is we looked at as you've heard the applicant has determined events. The staff looked at all the events that the applicant came up with us. But we didn't limit ourselves just to that. We wanted to make sure that there were other events that should have been considered in the ISAs that hadn't. And there's actually a couple events that determined through the three and a half review that were added from the initial submittal and the ISA summary. So you try and emphasize what the applicant has done. But we don't -- It's a trust but verify.

We also considered the items that were in the ACRS letter from the construction authorization as the applicant has gone through. In our SER we have not identified any open items.

Just real quickly this organization of the SER we're following the NUREG 1718. I won't talk about all these different areas. But we covered all the major of the big player. You know, fire, chem, crit. This is basically a chemical facility. So as you'd expect, we emphasize a lot of the activities and review activities related around that. But we've covered everything.

The Chapter 11, Plant Systems, that you see this is a very broad thing varying from the confinement systems, the civil structural design, load handling. So that contains a lot of different things in that chapter. So we've gone through extensively in the review. But like I said, I'll just touch on a little bit of what we've actually done, some specific areas.

To kind of give you an idea of what we did over the last three and a half years, I put this table together which is over the next two pages to kind of lay out each specific discipline, number of meetings. And meetings would be one, two, three day durations between applicant and the staff. The in-office reviews as I explained, you know, the applicant had actually set up a local office where documents were available for the staff to review and RAIs. The next one.

You kind of see the whole thing and then kind of in summary of this over the three and a half year period you know we held about 70 different meetings and all these technical disciplines. There was around 100 different in-office reviews. And there were about 600 RAIs generated. As you can see, just to get a flavor, the staff has done very extensive review of this application.

The RAI process itself, we did it on a discipline specific basis. Each of these areas, even though they're integrated, and we made sure we handled areas that are integrated, looking at things like fire events and explosion events. For specific disciplines like chem safety, we did reviews of chem safety aspects.

After we looked at the actual documents, performed the in-office reviews, did whatever confirmatory calculations, had our different meetings with the applicant to make sure we fully understood what was in there, we developed our request for additional information.

But again the idea of trying to have a good communicative process, we didn't want to just send a bunch of questions out. We wanted to make sure that the applicant fully understood where the staff

was coming from. So the approach we took is we had meetings to discuss what our questions were before we issued them to make sure that the applicant understood what they were. And also when the applicant prepared their responses before they officially sent responses in we had sometimes -- we had at least one but sometimes more than one meeting along the way to make sure they were actually hitting the mark for what the staff had requested.

Following that interaction, the applicant formally responded to the RAI, revised the LA and ISA summaries as appropriate. And one of the keys as was mentioned a little earlier in this process of Part 70 the license application is what contains the commitment. So the staff was very careful to make sure that the things that we needed to make our safety case those commitments were made in the LA. That will be the enforceable document throughout after a license is issued. And as I said we had issued over 600 RAIs.

Just kind of to give you the flavor of the details of the review, the applicant talked about their strategy related to red oil. So I'll talk a little bit about how we came to our conclusions related to the red oil event.

There was numerous in-office reviews. You

know, a lot of staff effort was spent on this. A lot of reviews of documents, multiple meetings trying to make sure there was a full understanding of exactly what the applicant had done before from the construction authorization, what they were planning in the stage, what their strategies were.

The kinds of documents that we looked at, of course, we looked at the LA and the ISA summary. We looked at the commitments in the LA. The nuclear safety evaluations which are the first layer below the ISA summary. You kind of think of these documents. You think of an onion. You know the LA and ISA summary are kind of the skin and the first layers of the onion. But in order to have the true understanding of everything that's in there, you have to peel down and really all these other documents that we looked at were really peeling down into the onion to make sure we have full understanding of that.

We also for red oil looked at the Defense Nuclear Facilities Safety Board recommendations related to red oil. We looked at international reports including other experiences internationally, the French since these facilities are modeled after French facilities. What the French regulator looked at in terms of red oil.

The staff reviewed the previous incidents. As Sven had mentioned, there had been some previous red oil incidents back in the '50s. And there were lessons learned that came out of that. So the staff looked back at those incidents to see what those lessons learned were, to see how they were integrated into the current strategies.

We reviewed the applicant's calculations on various things like the venting and other things that they had in there. Additionally for red oil there was an independent evaluation that was done by Brookhaven National Labs to kind of look at the red oil phenomenon from a different angle. So that was part of what the staff looked at the results of that also.

And how did we come to our conclusion. We looked at the applicant's strategies versus the DNFSB and all the other information of the French and other operating facility experiences. We looked at the safety of origins that they had in there, the redundant IROFS, the numbers of IROFS. As they mentioned, they are layers of protection. Those are the kind of things that we looked at.

We looked at in terms of the ISA structure of the four pillars of how the IROFS were identified,

how they incorporated management measures, QA and codes and standards. And then, of course, we looked at the lessons learned from previous red oil events. And in the case of red oil the staff agreed that after the IROFS are applied and all the other pillars of the ISA process were implemented then the red oil is highly unlikely.

For my second example I tried to use something that was a little bit different. So I chose criticality. If you look at the different events like loss of confinement and explosion, they are all fairly well defined as a relatively small number of event groups even though there are a lot of groups of events there.

For criticality, it's different. There is a lot of events. There is in the 1,000 of events. There is many. I believe where there was I believe nine nuclear safety evaluations there is in the range of 48 nuclear criticality safety evaluations on each process unit. So the staff couldn't look at everything and all of them. So we looked at safety basis documents and we developed a very detailed methodology for how we would do our vertical slice for criticality.

So we looked at the ISA summary. And then

we looked at again, peeled down the onion and looked at the NCSEs, the many calculations, things like the piping instrumentation diagrams, other documents that were available, the different drawings of the facility to make sure we had a good understanding of it, a system design description of the process, the hazard analysis and the technical. So there's a lot of information underlying what you see in the ISA summary related to criticality.

And for our vertical slice, since there is as I mentioned, 53 criticality control units, our reviewers determined that we were going to look at certain ones and the ones we chose were ones based on the highest potential for criticality. So it's the form and quantity and material. So things that were in the aqueous stage we looked at those as being something that was more significant than some of the powder areas that were more understood.

So we tried to break out our vertical slice into areas that we thought basically the more bang for the buck. We looked at the type and complexity of systems, things that were relatively straightforward compared to some things that were fairly complex in terms of what needed to go on, what kind of parameters and strategy the applicant was

using for each of these particular areas, how much redundancy, how much they're counting on administrative controls. Also in terms of integrating, we looked at the significance from one unit to another, you know, particularly areas in tanks where it went from criticality safe geometry to areas that are not criticality safe geometry. So those are areas of particular concern.

We looked at the safety of origins in terms of determining our vertical slice. And also since the French facilities were designed as was based on we looked at deviations from the referenced French facility design. Also the criticality reviewers did an in-office review basically at the French facilities to make sure they understood what actually happened in the operating facilities at La Hague and MELOX.

So we didn't limit ourselves just to looking at documents. We actually looked at the actual facilities that were operating and talked to the individuals that were more involved in that design in France.

And how did the staff come to its conclusion for criticality. We reviewed the applicant's methodology for highly unlikely and compliance with double contingency. We performed some

confirmatory calculations as we determined was appropriate.

Kind of our conclusions here where the staff has in place, that the applicant has in place, the staff qualified to do an NCS program, a criticality safety program. The applicant conduct operations based on technical practices, has established safety limits and controls, the processes are subcritical and under normal and abnormal conditions and adhere to double contingency principle.

The SRP laid out many, many things that the applicant needed to do and part of the details of that is making sure they had met all the ANSI guidance related to criticality, that they actually did it and that they committed to doing all the things that we felt were necessary for a criticality safety program.

One thing that was a little bit different in the criticality write-up. There is some discussions related to things that needed to be done during PSSC verification. It's a little different than the other chapters. As I had mentioned before we can issue a license we have to go through a process of PSSC verifications. Criticality safety is a PSSC. So anything that we talk about verifying that will be done prior to issuance of license. That's why we

didn't consider any of those things open items because that PSSC verification process is something that's going on for all the systems that you see in the SER.

And just kind of a conclusion for criticality, the staff has reasonable assurance that the applicant's implementation of the ISA will meet the requirements of Part 70 and provide and ensure protection of the public health and safety including worker's environment basically agreeing with the applicant's termination of highly likely for various criticality events.

And just kind of in conclusion again the staff is requesting the ACRS endorsement of the SER. The license will not be issued until we've completed our PSSC verification. So there is opportunities to complete what's required in the regulation and make that these items are better related or completed and constructed properly. And the staff in the SER concluded that the license application meets the requirements in Part 70 as we documented in the SER.

MEMBER POWERS: Wonderful. That was really good. I like that. Wanted it at high level and wanted to know exactly what the staff had done and I think you did -- you hit my nail on the head. Let's see if the members' nails were hit on the head. Are

there any questions to staff.

MEMBER BONACA: You have --

MEMBER POWERS: Understand, of course, that you just got a quick tour of the two days of detail and many thousands of pages.

MEMBER BONACA: I have a question.

PARTICIPANT: Five hundred and sixty eight in the SER.

MEMBER BONACA: I had a question on page 14. You have a statement there that says "Deviations for referenced French facility design." Were there many of those? And were they significant?

MR. TIKTINSKY: Chris Tripp who is our criticality reviewer would you like to answer that?

MR. TRIPP: I would say there weren't a lot of changes. There may be a handful. I think half a dozen or so are mentioned specifically in the SER. One particular change is that in France they've basically credited the normal process PLC as a safety control. In the U.S. facility they don't take credit for that. That still exists. That's being used as defense-in-depth. But they credit two redundant safety PLCs instead. So that's one change.

There are other changes concerning in France they have a lot of radiation detectors that are

used basically to indicate that you're starting to have a mass buildup. Whereas in the U.S. facility in some cases they're going to be used to actually correlate to the mass to plants with a mass limit. That was another case. So there are things of that nature, a lot of which has to do with the different isotopics, the reactor grade versus the pure plutonium in the U.S. facility.

MEMBER BONACA: Thank you.

MR. TRIPP: We tried summarize those in the SER because we did put a lot of emphasis on the operating history in making our conclusion.

MEMBER BONACA: Thank you.

MEMBER POWERS: Any other comment?

(No response.)

Well, thank you very much.

MEMBER ARMIJO: Dana, before you go, I just want to say I attended the subcommittee meeting. I didn't participate in the early construction stuff. But it was an impressive amount of work that's been done by the applicant and clearly by the staff. The thing that really bothers me is something that's probably above your pay grade and mine. But I'll speak to it anyway.

(Laughter.)

And that is the vulnerability of this facility to an external threat that apparently is not in the regulations and that is what we're doing for new reactors today in doing aircraft impact assessments. And I know this is not a reactor. I know it's not a high energy facility. But it does have tons of plutonium in a variety of forms, liquid and powder and everything else. And it seems to me there's a lack of consistency in the safety requirements for a threat that's credible enough to apply to new nuclear plants. But why isn't it applied to this facility? And I'll leave it at that just as a comment for the record.

MEMBER POWERS: Now we'll go back to thanking you all for you did what I didn't think was possible. But you gave us a good thumbnail sketch on what the facility is and how you happened things and an excellent summary of all the work that the staff did. It was quite impressive.

And with that, I'll turn it back to you, Mr. Chairman.

CHAIRMAN ABDEL-KHALIK: Thank you. At this time we will take a break, and we will come back in session with this clock at 5:50 p.m.

(Whereupon, the above-entitled matter went

1 off the record at 5:32 p.m.)

GE Hitachi Nuclear Energy

ESBWR Long Term Core Cooling

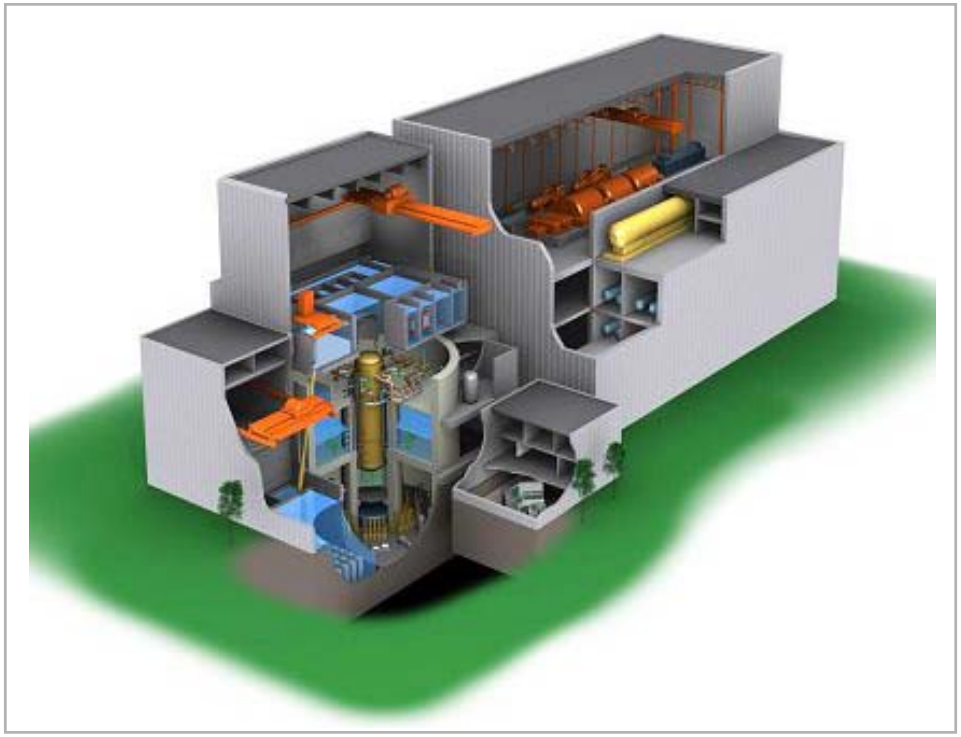

Advisory Committee on Reactor Safeguards

Jesus Diaz-Quiroz

Wayne Marquino

September 9, 2010

HITACHI

Copyright 2010, GE-Hitachi Nuclear Energy Americas LLC

All Rights Reserved

GEH Agenda

- ESBWR Core Cooling
- ESBWR Containment Cooling
- ESBWR Debris

HITACHI

ESBWR Long Term Core Cooling

Core does not uncover in the worst break, considering uncertainties.

- More than 0.5 m margin at time of minimum level

Core does not dryout or heatup in ESBWR

- PCT=Initial temperature

Containment Pressure remains below design pressure for 72 h

- Post 72 h RTNSS system, PCCS vent fans employed to maintain pressure at a reduced level

<u>Conclusion:</u>

Passive systems provide core cooling for 72h, followed by depressurization from RTNSS PCCS vent fan

HITACHI

ECCS

Safety-related core cooling is provided by GDCS Injection Lines and PCCS

- Coolant inventory required for core coverage and cooling inside containment – GDCS pools
- GDCS injection lines drain pools into vessel and boil off is condensed by PCCS and returned via GDCS injection lines

RG 1.82 Rev. 3 Not Applicable to ESBWR

- GDCS and PCCS do not utilize pumps
- Safety-related source for coolant in GDCS pools
- GDCS equalizing lines not required to open for LOCA scenarios as identified in DCD Chapter 6

Short and long term core cooling provided by GDCS Injection Lines and PCCS can be sustained

HITACHI

Defense-in-Depth

Suppression Pool Cooling

- Cooling automatically provided by Fuel & Auxiliary Pool Cooling System (FAPCS) during normal operation to maintain pool temperature
- Reactor Water Clean Up (RWCU)/Shutdown Cooling (SDC) can also be used through a cross-tie with FAPCS

High Pressure Injection

- High Pressure CRD makeup source of coolant comes from the Condensate Storage System (isolates in a LOCA)

Low Pressure Injection

- FAPCS or RWCU/SDC through cross-tie can provide low pressure makeup with source of coolant from the suppression pool or the Condensate Storage System
- Operator action is required to initiate FAPCS or RWCU/SDC in low pressure injection mode

HITACHI

Sources of Debris to FAPCS/SDC

- Insulation
  - Insulation is restricted to reflective metal insulation (RMI) inside containment.
- Coatings
  - Unqualified coatings are not allowed in the containment.
  - The coating systems applied inside containment meet the regulatory positions of RG 1.54 and the standards of ASTM D 5144.
- Other
  - Rust particles are minimized by use of approved coatings.
  - Drywell rust particles, dirt and dust, operational fibrous (e.g. rags) debris
- Sludge (pools)
  - Suppression pool sludge is minimized by the use of stainless steel liners

HITACHI

FAPCS Suppression Pool Suction Strainer

- Designed considering a BWR debris source which bounds ESBWR
- FAPCS suppression pool suction strainer is a Quality Group B and Seismic Category I component.
- It has perforated plate hole sizes of < 2.508 mm (0.0988 inches)
- Both seismic category and hole size are required to be confirmed by ITAAC.

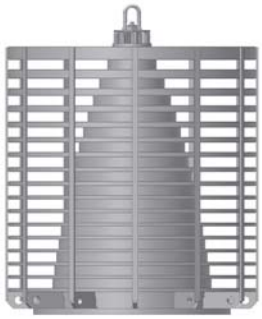

Prototypical BWR Suction Strainer

HITACHI

NPSH Margins

FAPCS in low pressure injection mode with suppression pool as source analyzed

- No credit for Containment Overpressure
- Assumed debris types and amounts expected for a current operating BWR plant
- Analyzed at minimum and maximum pool temperatures
- FAPCS RWCU/SDC pumps are located below the suppression pool floor (both at same level)

Temperature	NPSH Available	NPSH Required	Total Debris Head Loss	NPSH Margin
°F (°C)	ft	ft	ft	ft
110 (43.3)	71.4	16.4	19.26	35.74
169 (76.1)	60.6	16.4	12.27	31.93

NPSH Margin = (NPSH Available) – (NPSH Required) – (Total Debris Head Loss)

HITACHI

Debris Transported to Reactor Vessel

- The earliest possible injection to the RPV is limited by the maximum injection pressure of the FAPCS in LPCI mode.
  - 290 psi is the potential maximum pressure the system can provide (DCD Table 9.1-8, tube side maximum pressure for FAPCS heat exchanger).
- Postulated earliest time for injection after a LOCA is 150 seconds which provides ample time for RMI to settle in suppression pool.
  - The low end settling velocity for RMI is 0.39 ft/s and suppression pool high water level is 18 ft, which results in settling time of about 46 seconds.
- The FAPCS suppression pool suction strainer limits the debris sizes to diameters of less than 0.0988 inches.
- WROG Blockage fractions have been applied to ESBWR
  - GE14E lower bundle geometry included
  - Lower ESBWR debris source, and larger number of bundles.

HITACHI

Postulated Fuel Blockage

- Fuel blockage cannot occur from debris entering top of bundles since debris injection into the RPV can only occur outside the shroud and then path available to enter bundles is through "bottom" of core plate.
  - Route for debris to enter bundles is through fuel support orifices.
- Analyzed fuel blockage for ESBWR using TRACG analysis follows the NRC/BWROG presentation, "BWR LOCA Long Term Cooling Fuel Effects to Debris Blockages".
  - Limiting RPV water level (IC drain line) LOCA was analyzed.
  - No heat up from initial temperature
  - For 100% blockage of lower tie plate, lower tie plate holes provide cooling

ESBWR Fuel Blockage Results

Blockage location	Percent blockage	Peak Clad temperature after blockage, deg. C (deg. F)	10CFR50.46 acceptance criteria, deg. C (deg. F)
Lower tie plate	100% of one channel group (16 fuel bundles)	217 (423)	1204 (2200)
Spacer #1	75% of one channel group	217 (423)	1204 (2200)
Upper tie plate	75% of one channel group	217 (423)	1204 (2200)

HITACHI

Summary

- Passive systems provide core cooling for 72h, followed by depressurization from RTNSS PCCS vent fan
- Debris considered from the backup injection systems
  - Suction strainer designed with bounding source
  - Blockage will not cause fuel over-heating

ESBWR design provides Long Term adequate Core Cooling with margin

HITACHI

Backup Material

HITACHI

Chimney Water Level – IC Drain Line Break LOCA

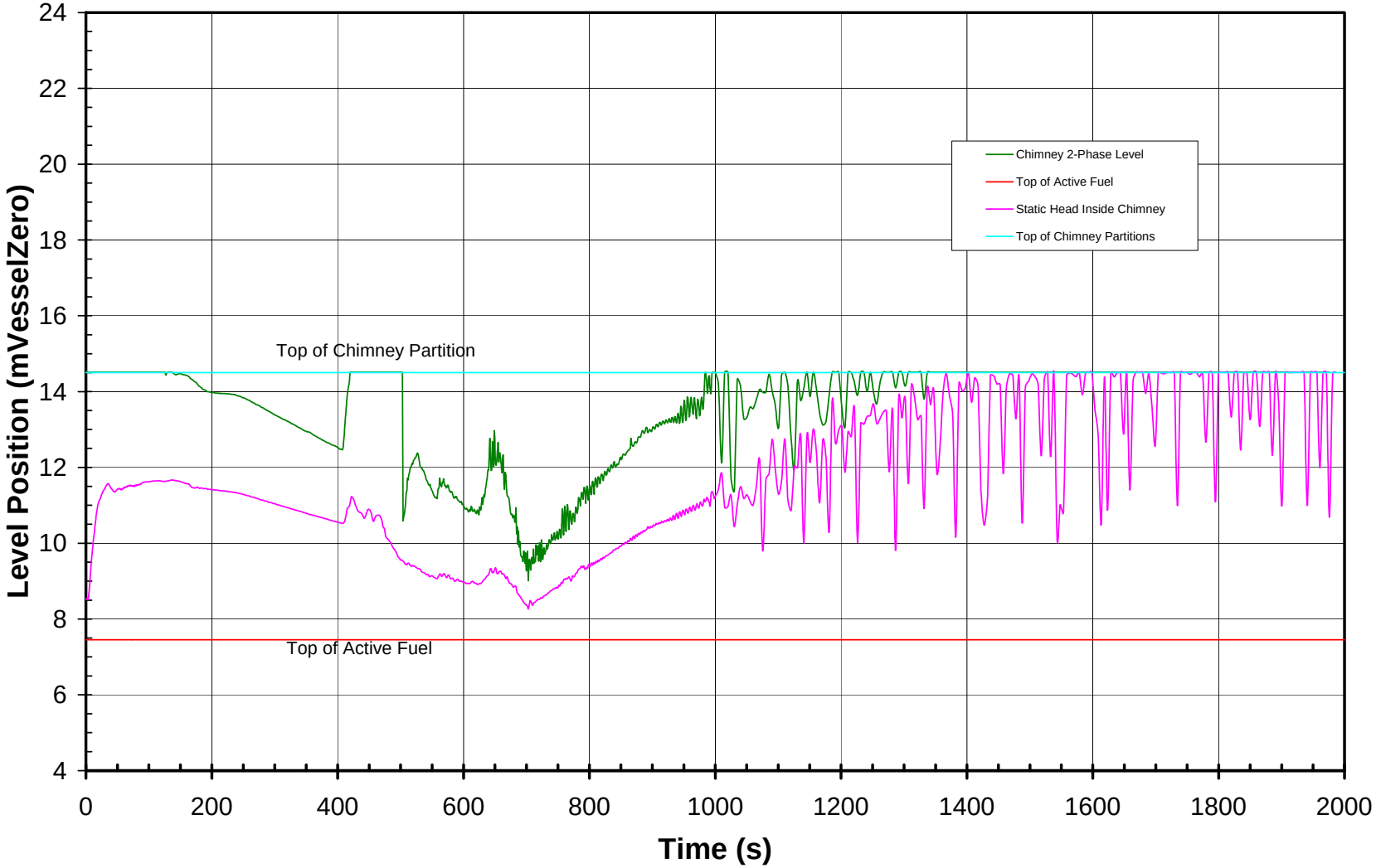

HITACHI

Containment Pressures (30-Day LOCA)

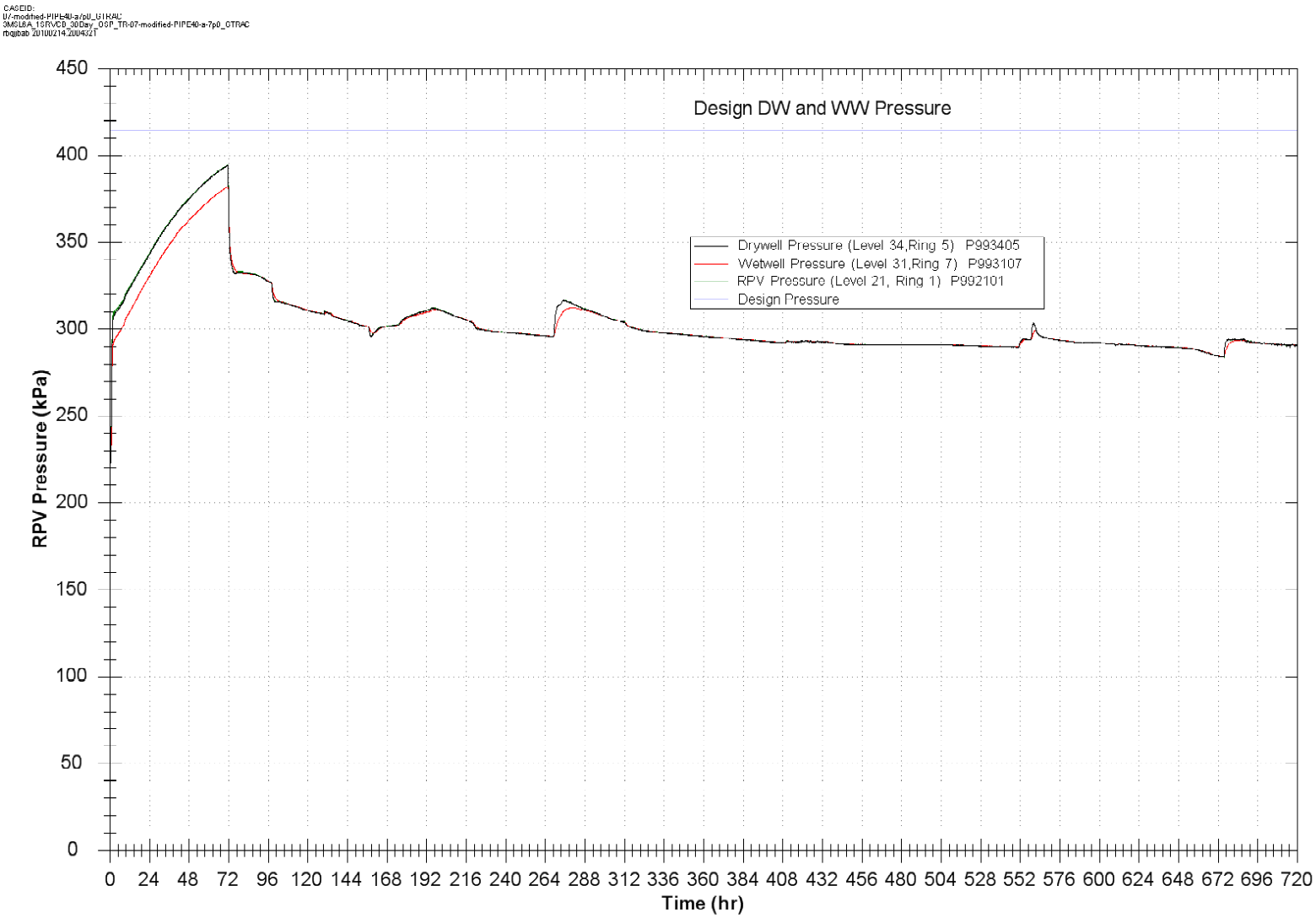

HITACHI

Debris Generation Zone of Influence, Reflective Metal Insulation (RMI)

- High energy line break selection is restricted to systems with piping at or above the containment drywell diaphragm floor.
  - The entrance to the vertical vents (debris transport path to the suppression pool) is located at the same elevation as the diaphragm floor.

Systems	Break Locations
Main Steam Piping, 30" Sch. 80	Pipe end at the RPV nozzles (Outside of the annulus)
Feed Water Piping at Nozzle, 12" Sch. 80	Pipe end at the RPV nozzle located inside the annular space between the RPV and Shield wall
Isolation Condenser Piping (supply to isolation condensers), 18" Sch. 80	Pipe end at the RPV nozzle located inside the annular space between the RPV and Shield wall
Head Vent[1], Sch. 2"	At RPV

- Main steam line break has the highest potential for generating most debris since it has the largest zone of influence.
  - Main steam line break will have the highest water level in the reactor pressure vessel (RPV) when compared to other LOCAs.

HITACHI

Generation and Transport of Debris to Suppression Pool

Latent debris and transported debris is calculated using methodology in NEDO-32686, Revision 0, "Utility Resolution Guidance for ECCS Suction Strainer Blockage," (URG).

Material Expected to be Entrained in Suppression Pool During a LOCA

Debris Type	Source	Amount
Iron Oxide Sludge[2]	Suppression Pool	600 lbm
RMI[4]	Drywell	4244 ft^2
Inorganic Zinc (IOZ)	Drywell	47 lbm
IOZ Top Coated with Epoxy	Drywell	85 lbm
Rust Particles	Drywell	50 lbm
Drywell Dirt and Dust	Drywell	150 lbm
Operational Fibrous Debris[3] (2.4 lbm/ft^3)	Drywell	1 ft^3

1. Debris types and amounts are from topical report NEDO-32686, Revision 0, “Utility Resolution Guidance for ECCS Suction Strainer Blockage,” (URG).

2. Sludge already in suppression pool. The URG specifies 300 lbs/year for plants that do not conduct a plant specific analysis of sludge. ESBWR is expected to operate on 24 month fuel cycles.

3. Operation fiber is based on engineering judgment and is not provided in the URG.

4. Calculated from Main Steam Line break.

HITACHI

Operator Actions

- Emergency Procedures will determine appropriate conditions for FAPCS/SDC operation considering:
  - Core water level
  - Suppression pool temperature
  - Pool and containment levels
  - Radiation levels (FAPCS/SDC vs. FAPCS)
  - Pressure vs. time (debris settling in suppression pool)
- Initiate suppression pool cooling then low pressure injection mode to bring the vessel to cold shut down

HITACHI

Containment/Core cooling Flow paths from containment

Described below, with excerpts from the DCD

5.4.8.2.1 Describes the post LOCA RWCU/SDC function with FAPCS cross tie

Figure 2.6.2-1. Fuel and Auxiliary Pools Cooling System schematic is marked up with flow paths , starting with the suppression pool suction strainer on the lower left the flow path is outlined in magenta. The flow path continues horizontally changes to red on the diagram to the FAPCS pumps and heat exchangers. The red flow path shows return flow to the reactor vessel. Returns flow can also be directed to the suppression pool for pool cooling, that path is shown in green.
The FAPCS pump and heat exchangers are in the fuel building which is outside the reactor building.

HITACHI

Cooling Flow paths (cont'd)

6.3 In the DBA LOCA, there is no fuel heatup or damage, the above flow paths could be used without spreading contamination. If there were fuel damage and contamination the flow would be constrained to the reactor building. From the suppression pool suction strainer, it would leave the FAPCS system (magenta down arrow on diagram) and connect to the RWCU/SDC system.

Figure 5.1-4. Reactor Water Cleanup/Shutdown Cooling System Schematic shows the connection from FAPCS Suppression Pool suction at the center of the schematic, (upward pointing magenta arrow, flow enter ing from the FAPCS system), the flow through the RWCU non-regenerative heat exchanger, and the flow through the RWCU pumps. The flow from the pumps and heat exchangers can be directed to the reactor (red arrow pointing left) Flow can also be directed to the suppression pool (magenta arrow pointing right), returning via the suppression pool flow path shown on Figure 2.6.2-1.

6.2.1.1.3.5.1 describes the use of the FAPCS/RWCU/SDC system in post LOCA cool down (assuming fuel damage) . Figure 6.2-14e11&12. Post-LOCA Containment Cooling and Recovery, shows the containment pressure & temperature Response - operating first in pool cooling mode, then in vessel injection mode.

HITACHI

U.S.NRC
UNITED STATES NUCLEAR REGULATORY COMMISSION
Protecting People and the Environment

NRC STAFF REVIEW OF THE APPLICATION FOR A LICENSE TO POSSESS AND USE RADIOACTIVE MATERIAL AT THE MIXED OXIDE FUEL FABRICATION FACILITY (MFFF)

Presentation to ACRS

September 9, 2010

David Tiktinsky, FCSS/NMSS

OUTLINE FOR DISCUSSION

- Purpose of presentation
- Licensing process and Safety Evaluation Report (SER) development
- Examples of detailed staff review

U.S.NRC
UNITED STATES NUCLEAR REGULATORY COMMISSION
Protecting People and the Environment

Purpose of Presentation

- ACRS review of NRC staff SER
  - Seek ACRS endorsement of the staff's evaluation of the LA for the MFFF
    - Final SER planned to be completed by December 2010

Licensing Process (Background)

- Staff SER on Construction Authorization Request and Construction Authorization issued (March 2005) (previously reviewed by ACRS)
- License Application (LA)/Integrated Safety Analyses Summary (ISAS) submittal (September 2006)
- Staff acceptance of LA for docketing (12/06)
- Technical review (12/2006-2010)
- Draft SER on LA prepared with no open items (6/2010)
- Licensing in litigation with Atomic Safety and Licensing Board (ASLB) (one contention accepted)
  - Hearing after completion of final SER
- Principal Structure System and Component (PSSC)(identified in CAR) verification (2014 estimated completion)
  - License will not be issued until this step is completed
- Issuance of license to possess and use radioactive material
- Operational readiness review
- Hot startup

SER Development

- Staff used Standard Review Plan for MOX (NUREG-1718)
- Staff review included:
  - In-office reviews
  - Discussions with applicant
  - Requests for Additional Information (RAI)
  - Substantial communications between staff and applicant
  - Performing confirmatory calculations (if needed)
  - Detailed vertical slice review
  - Looked at events identified by applicant and verified that other events were adequately considered
  - Considered items identified in ACRS on Construction Authorization Request (CAR) SER letter
- No open items identified

SER Organization

- Outline of SER
  - Chapter 1 - General Information
  - Chapter 2 – Financial Qualifications
  - Chapter 3 – Protection of Classified Matter
  - Chapter 4 – Organization and Administration
  - Chapter 5 – ISA
  - Chapter 6 – Criticality
  - Chapter 7 – Fire Protection
  - Chapter 8 – Chemical Safety
  - Chapter 9 – Radiation Safety
  - Chapter 10 – Environmental Protection
  - Chapter 11 – Plant Systems
  - Chapter 12 – Human Factors
  - Chapter 13 – Safeguards and Security
  - Chapter 14 – Emergency Management
  - Chapter 15 – Management Measures
  - Chapter 16 – Authorizations and Exemptions

Technical Review Summary

REVIEW AREA	MEETINGS HELD	IN-OFFICE REVIEWS	RAIs GENERATED
Civil/Structural	1	3	2
Criticality Safety	5	13	95
Chemical Processing	8	39	125
Classified Matter Handling	2	1	25
Confinement	4	4	39
Fire Protection	5	7	13
ISA	7	1	29
Electrical/ Instrumentation and Control	5	17	38

Review Summary (cont)

REVIEW AREA	MEETINGS HELD	IN-OFFICE REVIEWS	RAIs GENERATED
Radiation Protection	3		24
Emergency Planning	4		5
Environmental Protection	2		1
Mechanical/Fluid	2	5	17
Human Factors	4	2	31
Material Control and Accounting	6	1	142
Management Measures	3	7	59
Physical Protection	4	1	24

RAI Process Used in the Review

- Prepared on discipline specific basis
- Staff performed document reviews, in-office reviews, confirmatory calculations, etc.
- Staff met with applicant to assure understanding of Staffs' concern
- Applicant prepared response and meets with staff prior to officially responding
- Applicant formally responds to RAI and revises LA/ISA summary as appropriate
- Over 600 RAIs were prepared

Detailed Technical Review Example (Red Oil)

- Topic – Red Oil explosion event
  - What the staff did:
    - Performed extensive in-office reviews
    - Held multiple meetings with applicants experts
  - What the staff reviewed
    - LA and ISA Summary
    - Nuclear Safety Evaluations
    - DNFSB/TECH-33 report
    - International reports
    - Previous incident reports
    - Applicants' calculations
    - Independent evaluation reports prepared by Brookhaven National Laboratories

Detailed Technical Review Example (Red Oil)-Continued

- How did the staff come to its conclusion?
  - Compared applicant safety strategies with applicable DNFSB, French, and other operating facility experiences
  - Evaluated safety margins
  - Evaluated applicant's IROFS selected to make red oil event highly unlikely
  - Incorporation of lessons learned from previous red oil events
- Staff agrees that after IROFS are applied, then a red oil explosion event is highly unlikely

Detailed Technical Review Example (criticality)

- Nuclear Criticality Safety
  - Review Strategy
    - Safety Basis Documents Reviewed
    - Vertical Slice Review

Detailed Technical Review Example (criticality) (continued)

- Documents reviewed:
  - ISA Summary
  - ISA Documents
    - Nuclear Criticality Safety Evaluations (NCSEs)
    - Calculation documents
    - Piping & instrumentation diagrams
  - Drawings
  - Other:
    - System description documents (SDDs)
    - Process hazards analyses (PrHAs)
    - Technical notes

Detailed Technical Review Example (criticality) (continued)

- Vertical Slice selection
  - Ranking for detailed vertical slice review (of 53 criticality control units) based on criticality potential based on form and quantity of special nuclear material
  - Type and complexity of control systems
  - Diversity of parameters and strategy
  - Redundancy (especially administrative)
  - Significance to downstream units
  - Safety margin
  - Deviations from reference French facility design

Detailed Technical Review Example (criticality) (continued)

- How did the staff come to its conclusion?
  - Reviewed the applicants implementation of ISA methodology (highly unlikely and compliance with double contingency principal)
  - Performed confirmatory calculations as appropriate
- The staff determined:
  - The applicant has in place a staff qualified for a NCS program
  - The applicant can conduct its operations based on technical practices sufficient to ensure that licensed material will be possessed, stored, and used safely according to the requirements of 10 CFR Part 70;
  - The applicant has established safety limits and controls sufficient to ensure subcriticality, including an appropriate margin of subcriticality for safety for all credible events
  - All processes are subcritical under normal and abnormal conditions and will adhere to the double contingency principle

Detailed Technical Review Example (criticality) (continued)

- The staff has reasonable assurance that the applicant's implementation of its ISA will meet the applicable requirements of 10 CFR 70.66(a) and will ensure protection of public health and safety, including workers and the environment

Conclusion

- Staff is requesting ACRS endorsement of SER
- License will not be granted until after PSSC verification completed
- Staff concluded that the MFFF License application meets the requirements of 10 CFR Part 70 as documented in the SER

United States Nuclear Regulatory Commission

Protecting People and the Environment

Presentation to the Advisory Committee on Reactor Safeguards Full Committee

ESBWR Long-term Cooling

Hanry Wagage
George Thomas
James Gilmer

September 9, 2010

Long-term Cooling

- Previous ACRS interactions
  - December 3, 2009, ACRS Full Committee meeting
  - July 13, 2010, ACRS ESBWR Subcommittee meeting
- Regulatory Criteria: 10 CFR 50.46(b)(5) and GDC 10 and 50 of 10 CFR 50 Appendix A

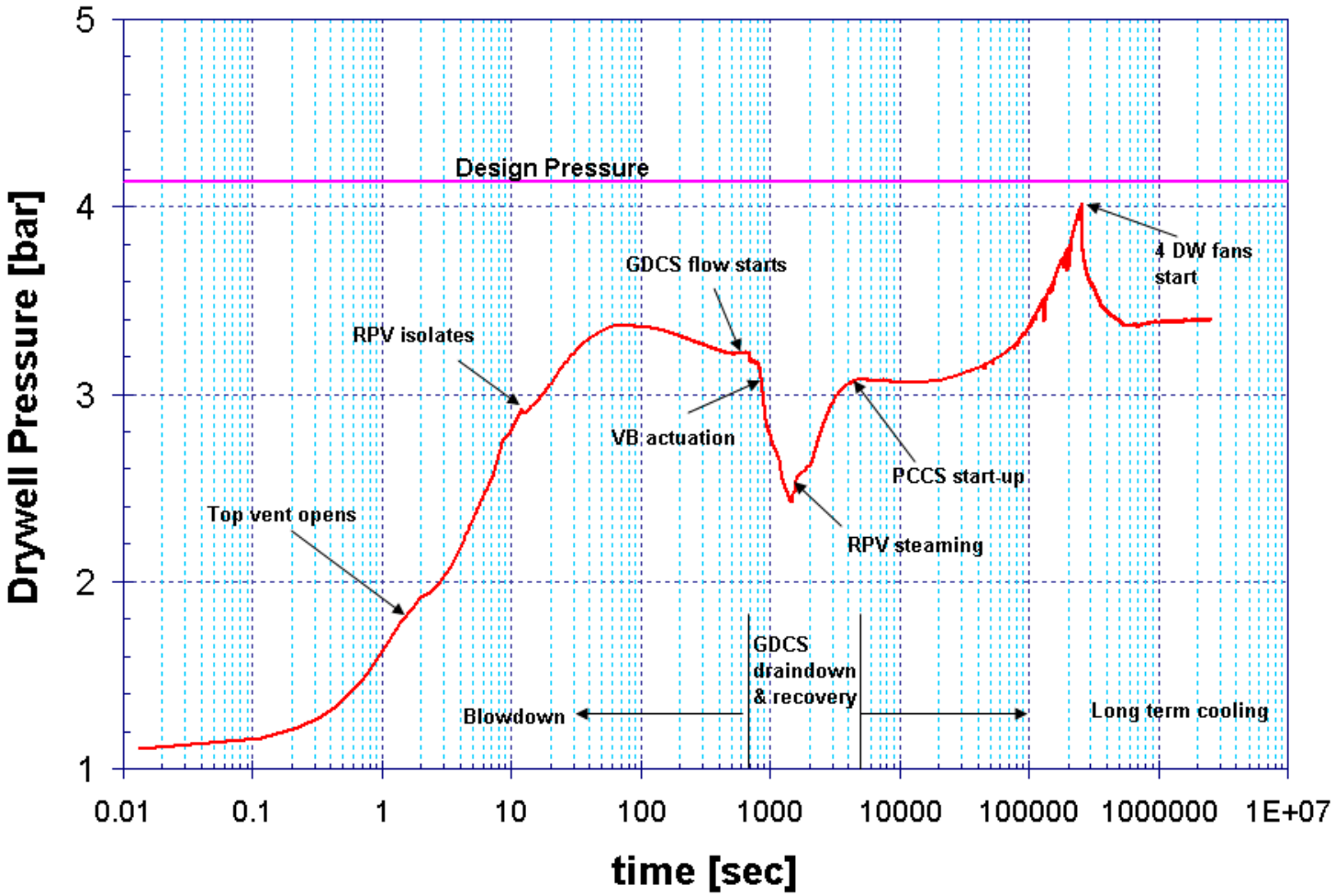

Figure 1. Drywell pressure predicted by MELCOR for MSLB (bounding case)

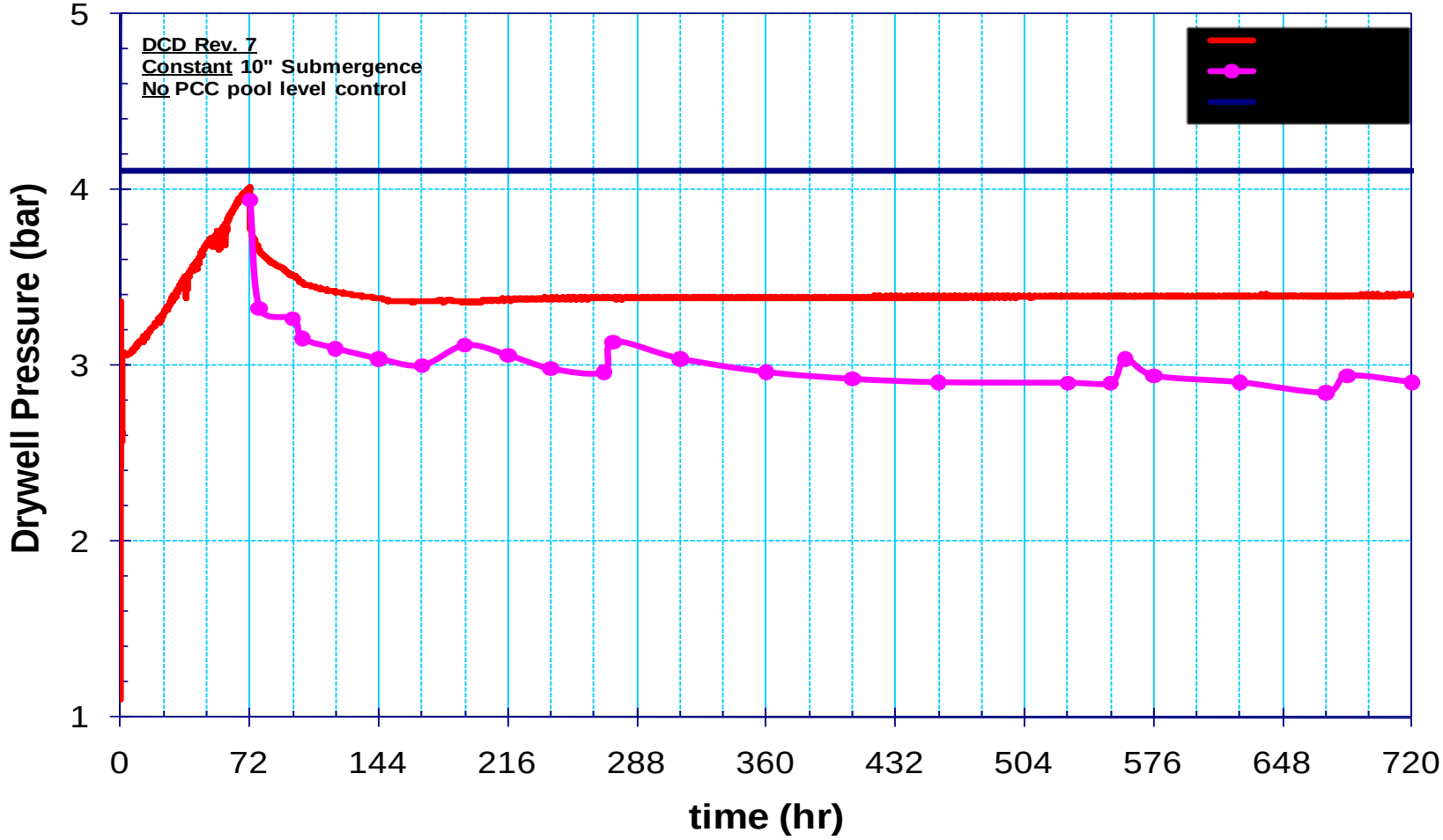

Figure 2. Drywell pressure predicted by MELCOR and TRACG (DCD Rev. 7) for MSLB (bounding case)

Core Cooling Water Sources

- GDCS Pool
  - Stainless steel liner
  - Gap between the top of the wall and the drywell ceiling (0.804 ft) is protected by shield and covered with a perforated plate with holes of diameter of less than 1.5 inches
  - No significant accumulation of debris in GDCS pool
- Suppression Pool (Beyond DBA or manual action)
  - Stainless steel liner
  - Strainer
  - Suppression pool cleanup during normal operations (Mode of FAPCS - Fuel and Auxiliary Pools Cooling System)

Alternate injection sources

- Control Rod Drive pumps taking suction from Condensate Storage Tank
  - Demineralized water
  - Water source outside containment
- Fire Protection System through Fuel and Auxiliary Pools Cooling System (FAPCS) provide cooling from 72 hours to 7 days
  - Water source outside containment

Core Cooling

- Debris is not expected to reach the core for DBA
  - Cooling provided by closed loop
  - No recirculation of water in drywell
- Staff concern regarding possible introduction of debris from non-safety injection sources
  - Down stream effects
- GEH calculations show that boiling transition is not expected even if significant portion of the flow areas in the inlet orifice and lower tie plate are blocked
  - Submitted in response to RAI 4.4-23
- Conclusion – core cooling is maintained

Long-term Cooling: Conclusion

- ESBWR design-basis LOCA containment long-term pressure response calculated by TRACG, which is confirmed by staff's MELCOR analysis, is below the containment design pressure and is acceptable.
- Long term core cooling has been demonstrated

Schematic of ESBWR containment (DCD Figure 6.2-15)

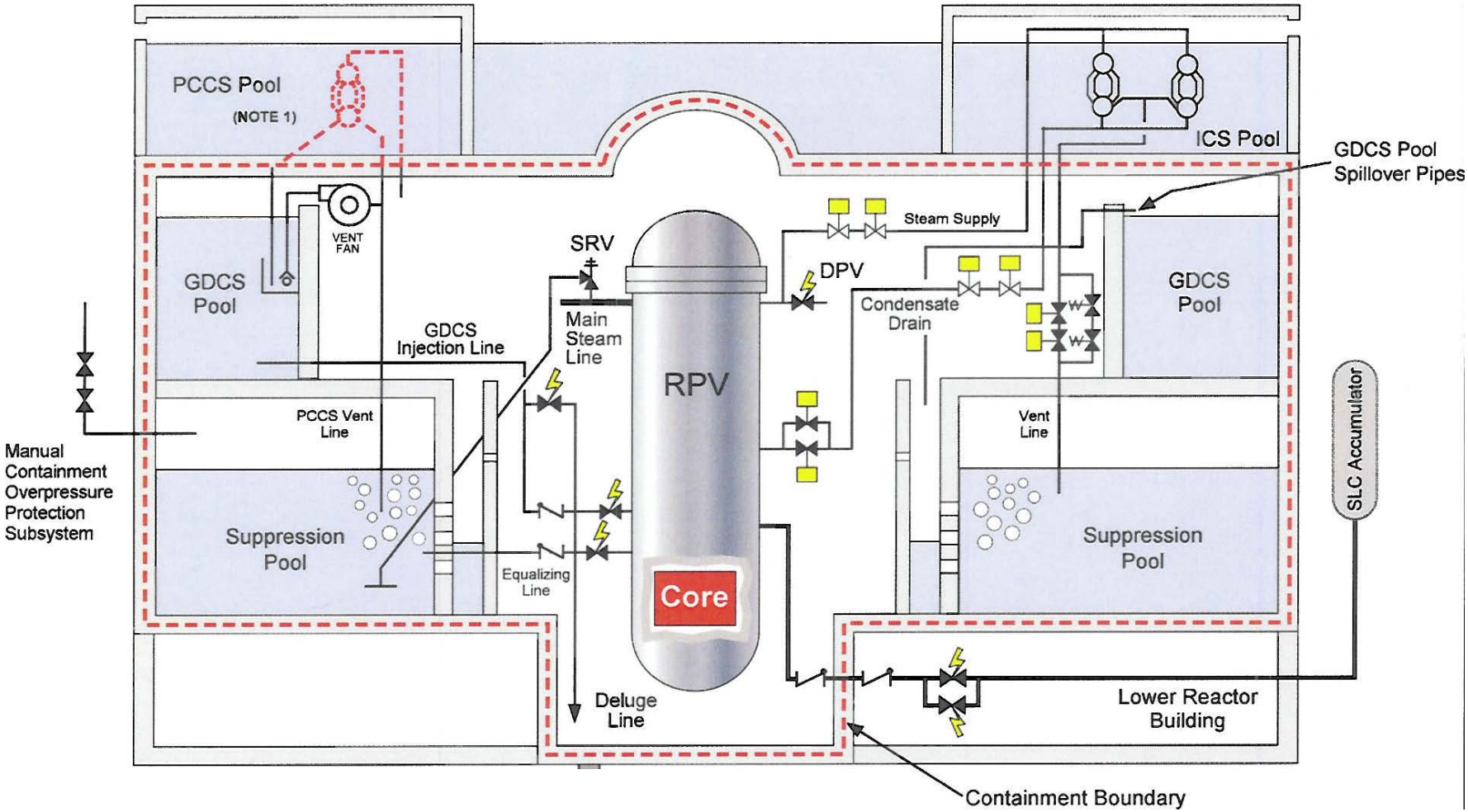

Fuel and Auxiliary Pools Cooling System (FPACS)

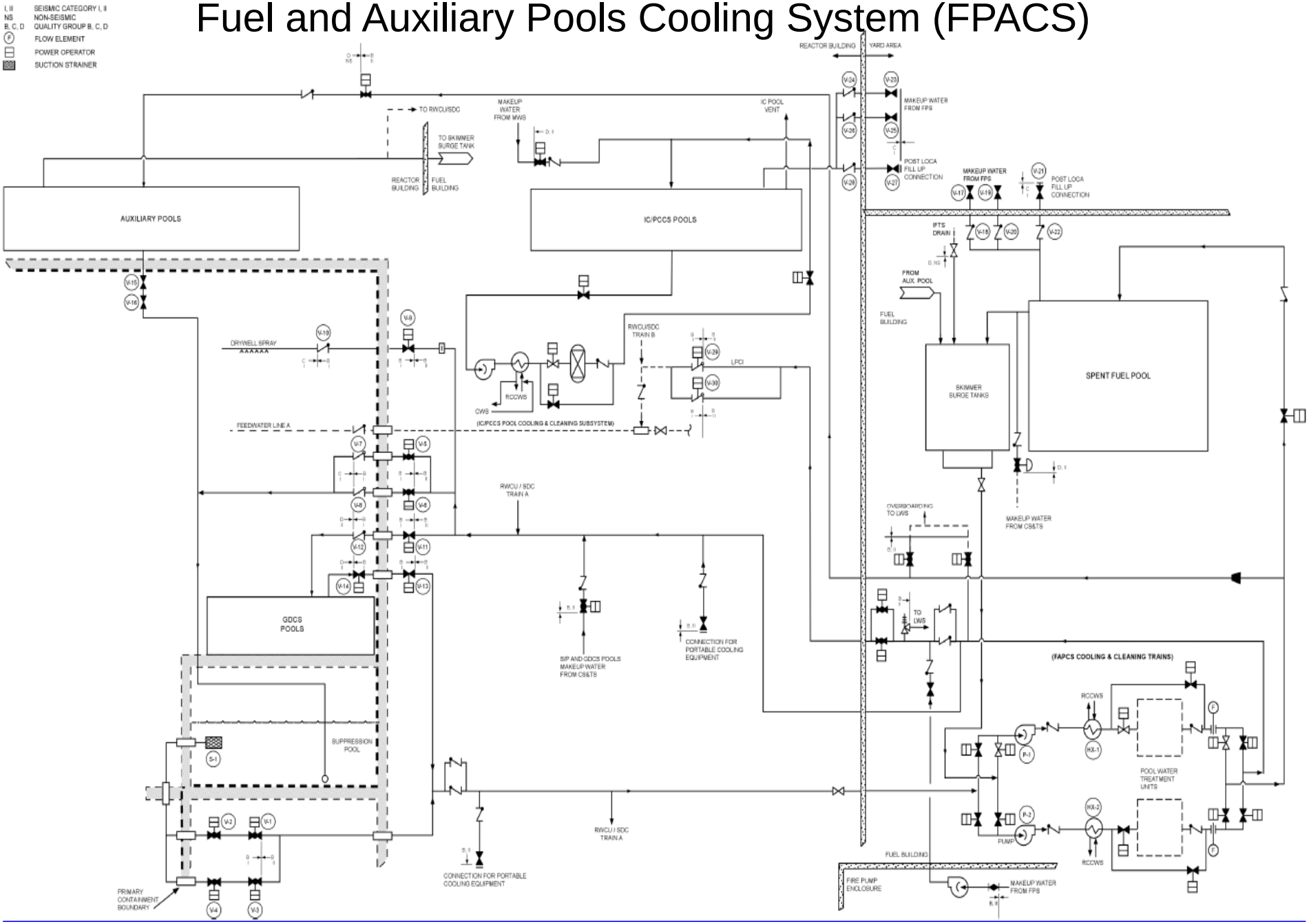

U.S.NRC
UNITED STATES NUCLEAR REGULATORY COMMISSION
Protecting People and the Environment

Closure Options for Generic Safety Issue 191, PWR Sump Performance

Presented by:
Christopher Hott/Michael Scott
Office of Nuclear Reactor Regulation

Presented to:
Advisory Committee on Reactor Safeguards
September 9, 2010

Purpose of Presentation

- Provide background/context for SECY-10-0113
- Discuss current status of resolution of sump performance issue
- Discuss views of stakeholders
- Provide overview of SECY-10-0113
- Discuss staff's recommendations

Background

- Generic Safety Issue (GSI) 191 involves demonstration that emergency core cooling system (ECCS) strainers will perform acceptably after a loss-of-coolant accident (LOCA)
- Early on, NRC staff concluded and ACRS supported that near-term action to make PWR strainers larger was prudent
- Issue has evolved as understanding has improved regarding various aspects of the problem since Generic Letter (GL) 2004-02 was issued
- Each licensee has made a major effort to resolve the issue (strainer sizes increased by 1-2 orders of magnitude), but licensees and staff have been repeatedly challenged by emergent issues

Issue Resolution Status

- 33 of 69 PWRs have already performed analysis and strainer testing using methods acceptable to the NRC staff -13 more plan to do the same
- Most of the 23 remaining plants have relatively large amounts of fibrous insulation
- Attempts to credit test and evaluation refinements have not generally succeeded
  - Debris generation/zone of influence (ZOI) reductions
  - Debris settling credit
- Staff has accepted testing that credits reduced debris erosion
- Industry planning new efforts to credit settling and ZOI reductions – staff will evaluate

Commission Brief April 2010

- Staff planned in early 2010 to push toward final near-term resolution via 10 CFR 50.54(f) letters
- In April 15 Commission brief, industry stakeholders expressed concerns about staff path forward
  - Little safety benefit
  - Large radiation exposure to workers
- Industry-preferred path forward was application of leak-before-break (LBB) to sump evaluations
- Union of Concerned Scientists letters
  - Staff on track to successful issue closeout
  - Could support LBB under specified circumstances

Staff Requirements Memorandum (SRM) May 2010

- Staff should not issue letters under 10 CFR 50.54(f) pending further Commission direction
- Staff should report to Commission by 8/27/2010 on potential approaches to closure, including:
  - Realistic ZOI
  - Application of General Design Criterion (GDC) 4 (LBB)
  - In-vessel effects of different fuels
  - Risk-informed resolution (e.g., proposed 10 CFR 50.46a)
  - Alternative regulatory treatment of in-vessel effects
  - Dose impact of resolution options
  - Consult with the Committee to Review Generic Requirements to ensure closure approaches comply with backfit requirements

GSI-191 – Safety Issue?

- LOCAs of low probability, particularly large breaks
- Inability of sumps to pass adequate flow could lead to core damage and loss of mitigation system (containment spray)
- Uncertainties in sump performance, particularly for “high-fiber” plants, are significant absent a defensible test
- LOCAs as small as 3 inches can challenge sump performance
- Prudent to not allow uncertainties to continue indefinitely

How Much Debris Reaches the Strainers?

- Lack of realistic models in areas critical to sump performance is the source of large uncertainty
- Bounding models are used to determine:
  - How much debris is generated
  - How much debris transports to the strainer
- The staff position is that these models are conservative, though not overly so
- Industry believes models are overly conservative, and some licensees have tried to justify refinements in key areas of debris generation and transport
  - Reduced ZOIs
  - Debris settlement credit

Dose Impacts

- Stakeholders indicated doses of up to 600 Rem and average of 200 Rem to replace all fibrous insulation
- Staff obtained data samples from a limited number of licensees who have replaced some insulation in containment – doses ranged from 5 to 44 Rem with an average of 19 Rem
- Staff data likely not bounding of worst case
- Some plants might not need to remove all fibrous insulation

Dose Impacts (cont'd)

Actual Plant Doses (person-rem)		Scope of Insulation Work Performed
Plant 1	6	411 linear feet replaced on RCS,SG,FW piping
Plant 2	8.9	2,319 linear feet replaced near SGs in loop rooms
Plant 3	35.9	5,799 linear feet replaced/repaired near SGs in loop rooms, basement, annulus areas
Plant 4	4.4	20 linear feet replaced on regen heat exchanger
Plant 5	21	Unknown amount replaced on SGs, PZR head, spray line, PZR valves, SG drains, blowdown lines
Plant 6	4.7	60ft^3 removed/replaced, also added banding to several hundred linear feet small bore piping
Plant 7	19.6	400 linear feet replaced and insulation on 3 SGs
Plant 8	43.9	1300 linear feet replaced and insulation on 3 SGs
Plant 9	23.6	1666ft^3 replaced on SGs, PZR, and Rx head. All SG bay work treated as asbestos area

Options Discussed in SECY-10-0113

- Option 1: Current holistic integrated approach, with or without firm schedules
- Option 2: Develop additional risk-informed guidance
- Option 3: Allow application of LBB to sump evaluations

Staff-Recommended Options

- Combination of Options 1 and 2
- Near-term resolution schedule for smaller LOCAs, and longer-term schedule for the less-likely larger LOCAs
- Revisit risk tools for GSI-191
  - Existing alternate methodology in 2004 safety evaluation
  - Proposed 10 CFR 50.46a
- Option 3 not recommended for reasons discussed in this presentation

GDC-4 Rule: Statement of Considerations

- LBB credit enhances safety through the removal of plant hardware (i.e., the removal of pipe whip restraints and jet impingement barriers) that negatively affects plant performance, while not affecting ECCS, containments, and environmental qualification of mechanical and electrical equipment.
  - LBB enhances safety through the removal of barriers to inspection
- LBB applies to local, not global, dynamic effects
- LBB removes the requirement to consider jet impingement forces on adjacent components, decompression waves within the intact portion of the piping system, and dynamic pressurization in cavities, subcompartments, and compartments

Application of LBB to GSI-191

- If GDC-4 is permitted to be applied to GSI-191
  - Might eliminate the need for additional insulation change-outs at some affected plants – thereby reducing worker radiation exposure
  - Would likely reduce the scope and number of needed insulation change-outs at affected plants
  - Might eliminate need for additional strainer testing for some affected plants
  - Licensees who have already shown satisfactory strainer performance could potentially recover operational margins
  - Could simplify assumptions in GSI analysis and staff review for GSI-191

Disadvantages

- Inconsistent with intent of GDC-4 because there would be no benefit for reactor safety
- Large reduction in defense-in-depth (DID)
  - LBB credit could allow large amounts of potentially problematic materials to remain in containment
  - If an LBB pipe ruptures, despite being a low-probability event, it would cause debris generation that would be unevaluated for impact on ECCS strainer performance
  - Small amounts and combinations of debris have been shown in testing to cause sump failure
  - Sump failure following a LOCA in LBB piping would likely cause loss of the ECCS core cooling (a prevention feature) and also result in loss of the containment spray system (a mitigation feature) without any additional protection system failures

Disadvantages (Cont'd)

- Primary water stress corrosion cracking (PWSCC)
  - LBB piping typically contains welds with Alloy 82/182 material which is susceptible to PWSCC
  - Industry has implemented guidance and programs to minimize the impact of PWSCC such as augmented examination
    - Some mitigation measures such as weld overlays and stress improvement have been implemented by some licensees
  - Additional analyses would be needed prior to applying GDC-4 to GSI-191
  - SRP 3.6.3 does not permit an active degradation mechanism (e.g., PWSCC). Increased inspections are an interim response relating to LBB piping
- LOCAs outside scope of LBB would be unaffected by this credit and could be problematic for some plants
  - LBB has not been approved for less than 6-inch pipe

Policy Considerations

- Approving LBB for GSI-191 would be inconsistent with DID principles
  - Initiating event for accidents included in a plant's licensing analyses should not result in core damage in the absence of additional independent failures
  - Independence of prevention and mitigation – should minimize likelihood that a single cause results in failure of a prevention and mitigation feature
- Approving LBB for GSI-191 would be inconsistent with the proposed 10 CFR 50.46a regarding ECCS performance
  - 10 CFR 50.46a requires ECCS to have capability to mitigate the full spectrum of LOCAs as directed by the Commission in SRM dated July 1, 2004 related to SECY-04-0037
  - Allowing LBB to be used as the basis for not further modifying sump screens or for not removing sources of debris may prevent the ECCS system from performing its design function, which is contrary to licensees being able to "successfully mitigate the full spectrum of LOCAs"

Policy Considerations (Cont'd)

- Policy decision to expand GDC 4 to allow credit for GSI-191 would presumably include a Commission decision that the change:
  - would not result in an unacceptable reduction in DID
  - is appropriate even though there is no perceived safety benefit
  - would not result in unintended consequences (e.g., unacceptable precedent for the use of LBB)
- Technical basis for expanding GDC-4 in the presence of PWSCC would need to be approved by the Commission
- Application of GDC-4 to GSI-191 would require revising the Statement of Considerations for GDC-4, revising the rule, and/or issuing exemptions

Recommendation

- Staff does not recommend that GDC-4 (LBB) be applied to sump evaluations to resolve the GSI-191 issue for the following reasons:
  - Large reduction in DID for ECCS system performance that is inconsistent with DID principles
  - Inconsistent with the intent of GDC-4 because there would be no corresponding safety benefit and the concern of local versus global dynamic effects
  - LBB credit for a global effect might set a precedent for other areas of plant design
  - PWSCC concerns in LBB piping
  - Inconsistent with risk-informed ECCS rulemaking of 10 CFR 50.46a that represents current NRC staff thinking on risk-informing ECCS regulations

Risk-Informed Resolution of GSI-191

- Reg Guide 1.174 guidelines specify that a risk-informed resolution should have
  - Acceptable delta risk
  - Maintenance of sufficient DID
  - Safety margins
  - Monitoring program
- Application of risk-informed methods is complicated by current limitations in phenomenological modeling
  - Key phenomenological models are either simplified and bounding (e.g., debris generation and transport) rather than realistic, or do not exist (e.g., debris bed head loss)

Change in Risk

- Bounding estimates indicate significant risk contribution for plants with high fiber or thin bed potential and unproven strainer capability:
  - Medium (2 – 6 inch) break probability ~ 5×10^{-5}/year
  - Recirculation required
  - Bounding sump clogging probability = 1.0
  - Recovery options limited (backflush, extended injection)
- Current limitations in phenomenological modeling make development of realistic "probability of clogging" model infeasible
- Medium breaks do not satisfy Δrisk criterion

Defense in Depth

- Loss-of-coolant accidents (LOCAs) of all sizes must be mitigated per regulation
- Sufficient DID would not be maintained with unrecoverable sump failure rate of 1.0 even if Δrisk criterion is met
  - Protection would be solely based on initiating event not occurring
  - Loss of systems that prevent core damage and degradation of systems that mitigate consequences (containment spray) would result

10 CFR 50.46a Overview

- Proposed rule represents current staff thinking on risk-informing ECCS regulation
- Single-sided area of largest attached pipe (transition break size) is largest LOCA analyzed as a design basis accident (DBA)
- Mitigation analysis for larger LOCAs up to the double-ended break of the largest pipe is still required but can assume:
  - Offsite power
  - No single failure
  - Non-safety equipment
- Enabled changes to licensing bases must be risk-informed with very small risk impact

Impact on GSI-191

- Affords flexibility of using nonsafety systems (e.g., backflush) for beyond-DBA LOCAs
- Potential (limited) benefit for debris source term
  - Less rigor for analysis beyond DBA
- Refined test approaches (zone of influence, settling credit) and/or insulation replacements still likely needed for some plants
  - Breaks below transition break size unaffected by proposed rule and potentially problematic for some plants
  - Could reduce scope of insulation changeout for plants limited by larger breaks

Implementation of 50.46a for GSI-191 Only

- Final rule due to Commission this December
- Implementing guidance 12 months after Commission approval of rule
- Licensee must demonstrate
  - Applicability of underlying basis for rule
  - Risk-informed criteria must be met (~ RG 1.174)
  - Leak detection system adequacy
- Add technical specifications to identify any non-safety equipment relied upon to mitigate beyond-DBA LOCAs
- Injection phase ECCS models and analyses not impacted by 50.46a application to GSI-191

Summary of 10 CFR 50.46a Option

- Represents current staff thinking on risk-informing ECCS requirements and is consistent with RG 1.174
- Would provide flexibility in resolving larger-break LOCAs but is not an “analysis only” solution
- Implementation for GSI-191 is not overly burdensome and would not affect injection phase analyses
- Schedule for rulemaking supports recommended option for GSI-191 closure but is dependent on Commission approval of 10 CFR 50.46a

In-Vessel Effects

- Industry planning “cross test” for September 2010
- Draft safety evaluation (SE) to be issued by September 2010
- ACRS review October/November 2010
- Final SE early 2011
- Staff view – strainer performance and in-vessel effects closely linked
- Resolving strainer issue in absence of consideration of in-vessel effects could lead to a strainer that would not clog and a core that would

Advantages of Recommended Approach

- Reasonably near-term resolution of an issue the staff sees as significant
- Allows time for additional attempts to refine evaluation methodology
- Maintains sufficient DID
- Incorporates available risk insights into evaluations and resolution schedule
- Continues demonstrably successful issue resolution process
- Contains checks and balances to reduce likelihood of staff requiring excess conservatism
- Implementation schedule is risk-informed and takes into account the amount of planning and effort required for licensee implementation

Conclusion

- Staff-recommended approach for issue resolution
  - Maintain current integrated review process
  - Revisit GSI-191 risk tools for evaluating larger LOCAs
  - Set near-term resolution schedule for smaller LOCAs, and longer-term schedule for the less likely larger LOCAs
  - Resolve in-vessel effects as part of GSI-191
- Staff does not recommend expanding LBB credit to GSI-191

Acronyms

DBA	design basis accident
DID	defense in depth
ECCS	emergency core cooling system
FW	feedwater
GDC	General Design Criterion
GL	Generic Letter
GSI	Generic Safety Issue
LBB	leak before break
LOCA	loss-of-coolant accident
PZR	pressurizer
PWR	pressurized water reactor
PWSCC	primary water stress corrosion cracking
RCS	reactor coolant system
Rx	reactor
SE	safety evaluation
SG	steam generator
ZOI	zone of influence

GSI-191 RESOLUTION OPTIONS

John Butler, NEI
jcb@nei.org

September 9, 2010

NEI
NUCLEAR
ENERGY
INSTITUTE

SECY-10-0113 RESOLUTION OPTIONS

Option 1 - Maintain the current holistic integrated resolution process for remaining plants including evaluating new refinement models

a) Set near-term schedule for licensees to address the full spectrum of LOCAs
b) Set near-term schedule for smaller LOCAs, and set longer term schedule for the less likely LOCAs
c) Do not set a schedule for licensees to address remaining issues

Option 2 - Develop additional risk-informed implementing guidance for GSI-191

a) Expand limited risk-informed guidance in Section 6 of the SE for NEI 04-07
b) Generate new guidance assuming the that proposed 10 CFR 50.46a is approved

Option 3 - Application of the GDC-4 exclusion of jet effects to debris generation

- NRC staff recommends Option 1.b in combination with Option 2
- The industry recommends Option 1.b in combination with Options 2 and 3

NEI

Industry Recommendations

- The industry recommends Option 1.b in combination with Options 2 and 3
- Industry agrees that design basis for more likely breaks should be met using deterministic criteria and methods acceptable to the NRC
  - Schedule should accommodate ongoing efforts to refine ZOI values, settlement credit in strainer testing and in-vessel effects

NEI

Industry Recommendations

- All risk-informed options should be pursued (available) to address low-likelihood breaks
  - Expand risk-informed guidance in current SE on Section 6 of NEI 04-07 (Option 2a)
  - Pursue approval of 10 CFR 50.46a and generate new guidance (Option 2b)
  - Allow application of GDC-4 (Option 3)

NEI

Industry Recommendations

- Option 2a – Expansion of NEI 04-07 Section 6
  - Section 6 in place currently with limited relaxation of known conservatisms
  - Future value dependent on "separation" between guidance applied to small breaks and large breaks
  - Schedule for development and application of expanded guidance unknown

NEI

Industry Recommendations

- Option 2b - Pursue approval of 10 CFR 50.46a and generate new guidance
  - Greatest value in 10 CFR 50.46a comes from risk-informed changes enabled by rule that are not related to GSI-191
  - The perceived value and subsequent plant interest varies by plant
  - Significantly extends schedule for closure

NEI

Industry Recommendations

- Option 3 - Allow application of GDC-4
  - Provide means to address unlikely breaks in manner that is risk-informed and complies with regulatory requirements
  - Application by plants considered closed permits recovery of operational margins
  - Guidance currently available and enables quick staff review and closure

NEI

Option 3
Allow application of GDC-4

- Debris generation is a direct consequence of local dynamic effects excluded from postulated breaks in LBB qualified piping
  - Debris generation is not a global phenomenon as defined by rule
- Safety benefit of GDC-4 rule change addressed worker safety and plant safety benefits associated with removal of pipe whip restraints and jet impingement shields
- The industry and NRC have made significant progress in resolving PWSCC in PWRs
  - Mitigation efforts include installing weld overlays and mechanical stress improvements
  - Utilities implemented PWROG enhanced leakage monitoring methods

NEI

Reasonable Assurance vs. Absolute Assurance

- Safety significance of GSI-191 has been adequately addressed
  - Design modifications (completed)
  - Application of conservative deterministic methods to more likely spectrum of breaks (Option 1b)
- Application of GDC-4 (Option 3) enables closure of GSI-191 in an expedient manner that
  - Acknowledges minimal safety impact
  - Reduces costs and worker impact
  - Credits defense-in-depth measures already taken by plants

NEI

GSI-191 RESOLUTION OPTIONS

John Butler, NEI
jcb@nei.org

September 9, 2010

NEI
NUCLEAR
ENERGY
INSTITUTE

SECY-10-0113 RESOLUTION OPTIONS

Option 1 - Maintain the current holistic integrated resolution process for remaining plants including evaluating new refinement models

a) Set near-term schedule for licensees to address the full spectrum of LOCAs
b) Set near-term schedule for smaller LOCAs, and set longer term schedule for the less likely LOCAs
c) Do not set a schedule for licensees to address remaining issues

Option 2 - Develop additional risk-informed implementing guidance for GSI-191

a) Expand limited risk-informed guidance in Section 6 of the SE for NEI 04-07
b) Generate new guidance assuming the that proposed 10 CFR 50.46a is approved

Option 3 - Application of the GDC-4 exclusion of jet effects to debris generation

- NRC staff recommends Option 1.b in combination with Option 2
- The industry recommends Option 1.b in combination with Options 2 and 3

NEI

Industry Recommendations

- The industry recommends Option 1.b in combination with Options 2 and 3
- Industry agrees that design basis for more likely breaks should be met using deterministic criteria and methods acceptable to the NRC
  - Schedule should accommodate ongoing efforts to refine ZOI values, settlement credit in strainer testing and in-vessel effects

NEI

Industry Recommendations

- All risk-informed options should be pursued (available) to address low-likelihood breaks
  - Expand risk-informed guidance in current SE on Section 6 of NEI 04-07 (Option 2a)
  - Pursue approval of 10 CFR 50.46a and generate new guidance (Option 2b)
  - Allow application of GDC-4 (Option 3)

NEI

Industry Recommendations

- Option 2a – Expansion of NEI 04-07 Section 6
  - Section 6 in place currently with limited relaxation of known conservatisms
  - Future value dependent on "separation" between guidance applied to small breaks and large breaks
  - Schedule for development and application of expanded guidance unknown

NEI

Industry Recommendations

- Option 2b - Pursue approval of 10 CFR 50.46a and generate new guidance
  - Greatest value in 10 CFR 50.46a comes from risk-informed changes enabled by rule that are not related to GSI-191
  - The perceived value and subsequent plant interest varies by plant
  - Significantly extends schedule for closure

NEI

Industry Recommendations

- Option 3 - Allow application of GDC-4
  - Provide means to address unlikely breaks in manner that is risk-informed and complies with regulatory requirements
  - Application by plants considered closed permits recovery of operational margins
  - Guidance currently available and enables quick staff review and closure

NEI

Option 3
Allow application of GDC-4

- Debris generation is a direct consequence of local dynamic effects excluded from postulated breaks in LBB qualified piping
  - Debris generation is not a global phenomenon as defined by rule
- Safety benefit of GDC-4 rule change addressed worker safety and plant safety benefits associated with removal of pipe whip restraints and jet impingement shields
- The industry and NRC have made significant progress in resolving PWSCC in PWRs
  - Mitigation efforts include installing weld overlays and mechanical stress improvements
  - Utilities implemented PWROG enhanced leakage monitoring methods

NEI

Reasonable Assurance vs. Absolute Assurance

- Safety significance of GSI-191 has been adequately addressed
  - Design modifications (completed)
  - Application of conservative deterministic methods to more likely spectrum of breaks (Option 1b)
- Application of GDC-4 (Option 3) enables closure of GSI-191 in an expedient manner that
  - Acknowledges minimal safety impact
  - Reduces costs and worker impact
  - Credits defense-in-depth measures already taken by plants

NEI

Sampling probes are located in the inlet header and in each effluent line of the two demineralizer units. Sample lines from each probe are routed to the sample station.

5.4.8.2 Shutdown Cooling Function

The normal shutdown cooling function is performed by the RWCU/SDC system.

The preferred post-LOCA shutdown cooling function is performed by the FAPCS. In the unlikely event that there is fuel damage, the RWCU/SDC system will perform the post-LOCA shutdown cooling function.

5.4.8.2.1 Design Bases

Safety Design Bases

Refer to Subsection 5.4.8.1.1 for the safety design bases.

Power Generation Bases

The shutdown cooling mode of the RWCU/SDC system is designed to:

- Remove decay heat during normal plant shutdowns;
- Remove the core decay heat, plus overboard the CRD cooling flow after approximately one-half hour following control rod insertion and assuming either the main condenser or ICS is available for initial cooldown; and
- With loss of preferred off-site AC power, bring the plant to cold shutdown in 36 hours in conjunction with the ICS, assuming the most restrictive single active failure.

The RWCU/SDC shutdown cooling function modes are interlocked with reactor power operation to prevent increase in core reactivity (Subsection 5.4.8.1.1).

Post-LOCA Bases

In the unlikely event that fuel damage has occurred, the post-LOCA shutdown cooling mode of the RWCU/SDC system is designed to:

- Bring the plant to cold shutdown, and maintain cold shutdown conditions, through realignment of the intersystem cross connection and the applicable intrasystem cross-connections to the FAPCS;
- Achieve and maintain plant cold shutdown conditions through the suppression pool cooling (with support of portions of the FAPCS), and the mid-vessel injection modes of operation; and
- With the support of portions of the FAPCS, deliver cooled water for drywell spray, GDCS pools makeup, or suppression pool makeup.

The RWCU/SDC system is not intended to satisfy GDC 38 requirements. The GDC 38 functional requirements are met by the containment PCCS heat exchangers for the first 72 hours. After the first 72 hours, refilling of the PCCS pools and the PCCS Vent Fans maintain stable shutdown conditions, indefinitely.

5.4.8.2.2 System Description

In conjunction with the heat removal capacity of either the main condenser and/or the isolation condensers, the RWCU/SDC system can reduce the RPV pressure and temperature during cooldown operation from the rated design pressure and temperature to below boiling at atmospheric pressure in less than one day (see Table 5.4-3). The system is also designed to control the reactor temperature reduction rate.

The system can be connected to nonsafety-related standby AC power (diesel-generators), allowing it to fulfill its reactor cooling functions during conditions when the preferred power is not available.

The shutdown cooling function of the RWCU/SDC system provides decay heat removal capability at normal reactor operating pressure as well as at lower reactor pressures.

The redundant trains of RWCU/SDC permit shutdown cooling even if one train is out of service; however, cooldown time is extended when using only one train.

In the event of loss of preferred power, the RWCU/SDC system, in conjunction with the isolation condensers, is capable of bringing the RPV to the cold shutdown condition in a day and a half, assuming the most limiting single active failure, and with the isolation condensers remove the initial heat load. Refer to Subsection 5.4.8.1.2 for a description of the RWCU/SDC pump motor ASD and its operation for shutdown cooling.

In the event of a severe accident resulting in fuel failure, train A of the RWCU/SDC system can be cross-connected to the FAPCS suppression pool suction and the FAPCS containment cooling line to provide containment cooling capabilities. This will allow containment cooling while maintaining the contaminated water inside the reactor building. In this condition the RWCU/SDC system has the capability to return cooled suppression pool water to the reactor vessel through the RWCU mid-vessel suction to preclude using the feedwater injection flowpath, which exits the reactor building.

System Operation

The modes of operation of the shutdown cooling function are described below:

Normal Plant Shutdown — The operation of the RWCU/SDC system at high reactor pressure reduces the plant reliance on the main condenser or ICS. The entire cooldown is controlled automatically. During the initial phase of reactor shutdown, the RWCU/SDC pumps operate at reduced speed with the pumps and system configuration aligned to provide a moderate system flow rate and control the cooldown rate to less than the maximum RPV cooling rate allowed. One or both trains of RWCU/SDC may be operated during the early phase of reactor shutdown and cooldown. As cooldown proceeds and RWCU/SDC removes a larger portion of the reactor decay heat, , total RWCU/SDC system flow is increased.

In each RWCU/SDC train, the bypass line around the RHX, and the bypass line around the demineralizer are opened to permit increased pump speed and obtain the quantity of system flow required to achieve the process state needed during the shutdown cooling mode. Flow continues through each in-service RWCU/SDC NRHX, with the capability of controlling the RCCWS inlet valve to increase, or decrease cooling water flow as necessary.

A loss of all power generation buses is not the limiting assumption and the effects of continued feedwater injection is more limiting, as it can potentially add water to the wetwell and compress the wetwell air space. The ESBWR design incorporates features that mitigate this challenge by isolating reactor inventory sources outside of containment and provides a method of GDCS initiation based on LOCA condition detection. These features ensure that containment remains within design pressure for the entire 72-hour event duration. These features also ensure acceptable performance for the full spectrum of LOCA events within containment, with or without the assumption of loss of external injection capability. Additionally, although power generation buses are considered available to add feedwater or High Pressure Control Rod Drive (HP CRD) injection, no credit is given for heat removal systems powered by these buses. Table 6.2-7h shows the sequence of events for the Main Steam Line Break with failure of one SRV and with offsite power available. Figures 6.2-14j1 through 6.2-14m3 show the pressure, temperature, DW and GDCS airspace pressure responses and PCCS heat removal for this analysis. The noncondensable mass and the void fraction in the DW and GDCS are presented in Figures 6.2-14n1 through 6.2-14o3. The detailed discussion on the chronology of progression is given in Appendix 6E.5. The cases analyzed without offsite power and water addition assume higher initial pressure, and result in higher pressure as shown in Table 6.2-5. The highest value of Maximum DW Pressure in Table 6.2-5 is the calculated peak containment internal pressure for the design basis loss of coolant accident.

6.2.1.1.3.5.1 Post-LOCA Containment Cooling and Recovery Analysis

For post-LOCA containment cooling and recovery, Main Steam Line Break scenarios selected are one SRV failure and one DPV failure. The analysis with PARs and 4 of the 6 PCCS vent fans uses the failure with one SRV and the analysis with RWCU/SDC in suppression pool cooling mode followed by shutdown cooling mode uses the failure with one DPV. The post 72 hour analysis results are not sensitive to the event selection (failure of one DPV versus one SRV) due to the fact that these two cases are nearly the same in transient responses up to 72 hours and the containment pressure and temperature are rapidly reduced upon the activation of the nonsafety-related Structure, System, or Components (SSC).

After the first 72 hours of the accident, the following nonsafety-related SSCs are utilized to keep the reactor at safe stable shutdown conditions, to rapidly reduce containment pressure and temperature to a level where there is acceptable margin, and then to maintain these conditions indefinitely:

(1) SSCs to refill the IC/PCCS pools;

(2) PCCS Vent Fans;

(3) Passive Autocatalytic Recombiner System (PARS); and

(4) Power supplies to the PCCS Vent Fans and the IC/PCCS pool refill pumps.

Once a state of safe, stable reactor shutdown is reached, containment pressure and temperature are maintained with sufficient margin to containment design limits for a long period of time. Figure 6.2-14e1 through Figure 6.2-14e10a show key parameters for the long term pressure reduction and maintenance phase. PARS function at 72 hrs and 4 of 6 PCCS vent fans are credited in the calculation.

The containment pressure is reduced and is maintained at a reduced pressure after the 72 hour peak. Other non-safety related, non-Regulatory Treatment of Non-safety Systems (RTNSS) SSCs can be placed in service to bring the reactor to cold shutdown conditions and to further reduce the containment pressure and temperature. These SSCs include the FAPCS as the preferred method, and the RWCU/Shutdown Cooling (SDC) system in the unlikely event there is fuel damage (Subsections 9.1.3 and 5.4.8, respectively). The RWCU/SDC and the FAPCS system are not part of the primary success path for post-LOCA containment cooling. Calculations of RWCU/SDC performance are provided here to show its ability to cooldown the reactor and containment. In the unlikely event of fuel damage, where the RWCU/SDC system is used, the Reactor Building HVAC Accident Exhaust Filter Units are a required support system for limiting onsite and offsite dose.

Containment pressure and temperature responses which represent a postulated accident recovery evolution, with RWCU/SDC (fuel damage assumed) providing the cold shutdown function are shown in Figures 6.2-14e11 and 6.2-14e12. These response curves are based on the RWCU/SDC operating in suppression pool cooling mode for 24 hours, beginning seven days after a LOCA, followed by vessel injection via the normal RWCU/SDC midvessel suction line, with suction from the suppression pool. The heat removal for this mode of RWCU/SDC operation is provided by the non-regenerative heat exchanger (NRHX). A conservative heat exchanger capacity was assumed which is well within the capability of the RWCU/SDC NRHX. Table 6.2-48 lists the RWCU/SDC NRHX data used in the analysis. There is no requirement to start the recovery actions at seven days, since the reactor is already in a safe stable shutdown condition, and containment pressure and temperature are in a non-upward trending state, with sufficient margin to containment design limits.

The accident recovery analysis shows that after being in suppression pool cooling for 24 hours and then injecting into the reactor vessel for approximately 10 hours, the suppression pool has equilibrated with the reactor bulk water temperature at cold shutdown conditions.

6.2.1.1.4 Negative Pressure Design Evaluation

During normal plant operation, the inerted WW and the DW volumes remain at a pressure slightly above atmospheric conditions. However, certain events could lead to a depressurization transient that can produce a negative pressure differential in the containment. A DW depressurization results in a negative pressure differential across the DW walls, vent wall, and diaphragm floor. A negative pressure differential across the DW and WW walls means that the RB pressure is greater than the DW and WW pressures, and a negative pressure differential across the diaphragm floor and vent wall means that the WW pressure is greater than the DW pressure. If not mitigated, the negative pressure differential can damage the containment steel liner. The ESBWR design provides the vacuum relief function necessary to limit these negative pressure differentials within design values. The events that may cause containment depressurization are:

- Post-LOCA DW depressurization caused by the ECCS (for example, GDCS) flooding of the RPV and cold water spilling out of the broken pipe or cold water spilling out of broken GDCS line directly into DW.
- The DW sprays are inadvertently actuated during normal operation or during post-LOCA recovery period.

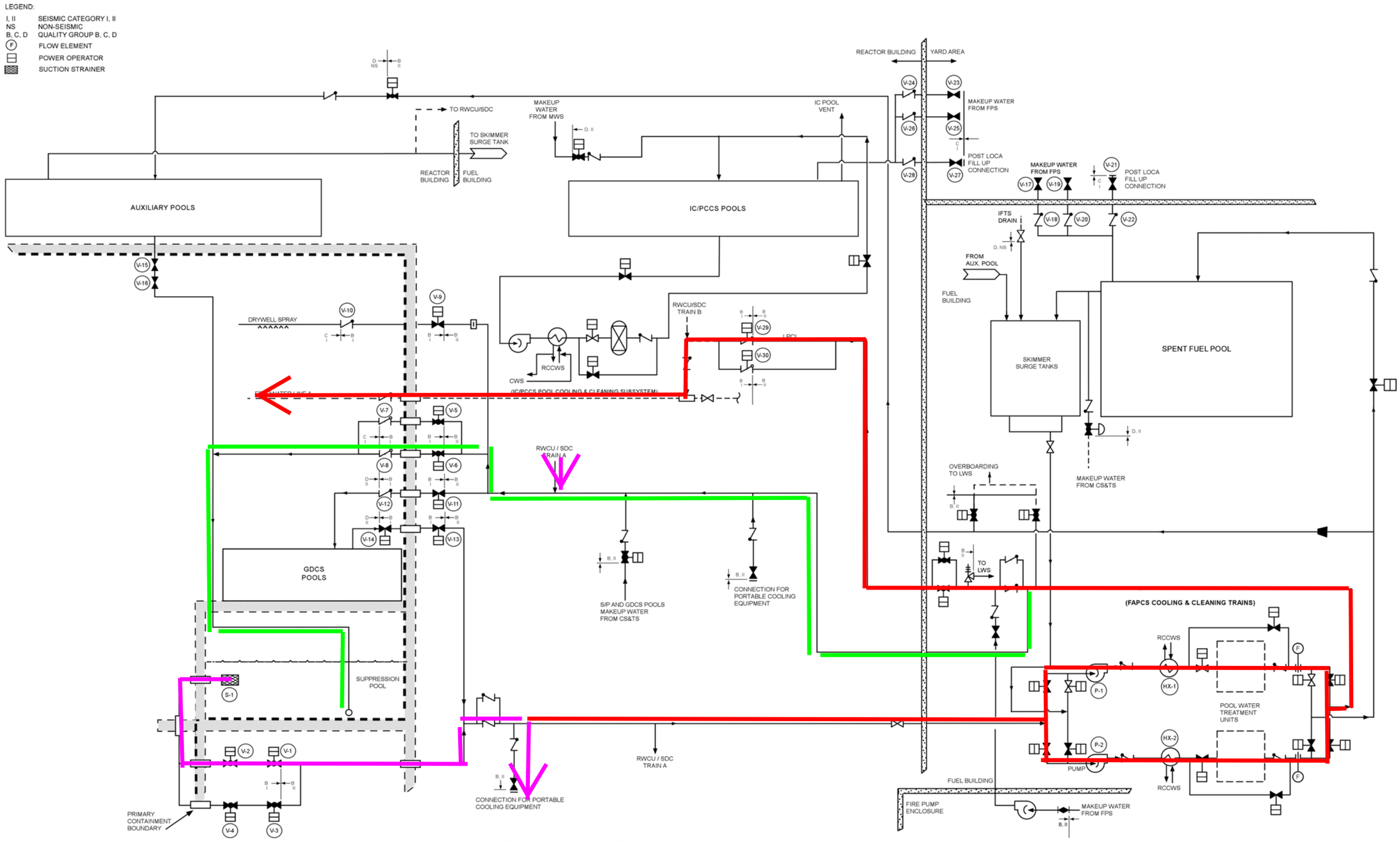

Figure 2.6.2-1. Fuel and Auxiliary Pools Cooling System

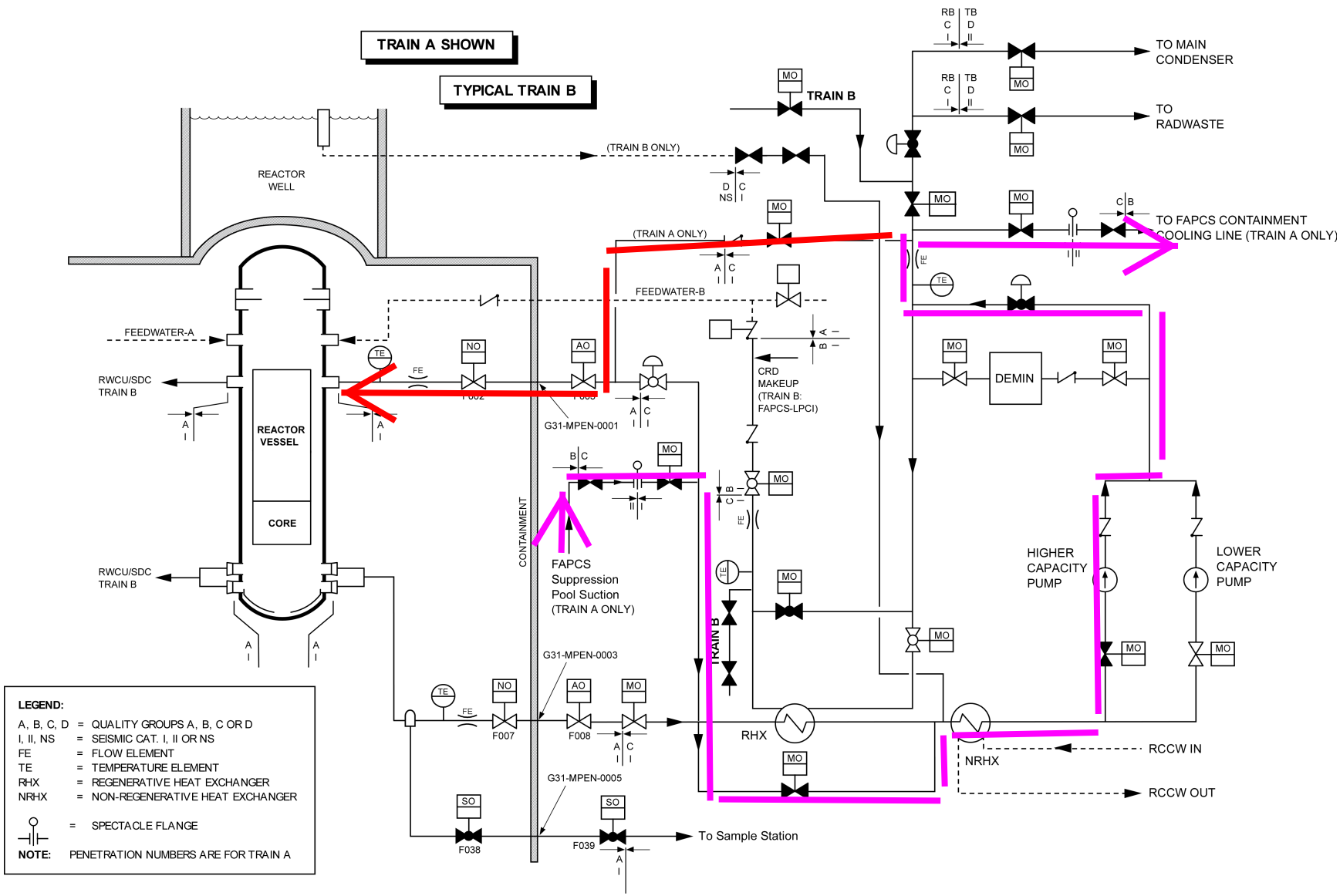

Figure 5.1-4. Reactor Water Cleanup/Shutdown Cooling System Schematic

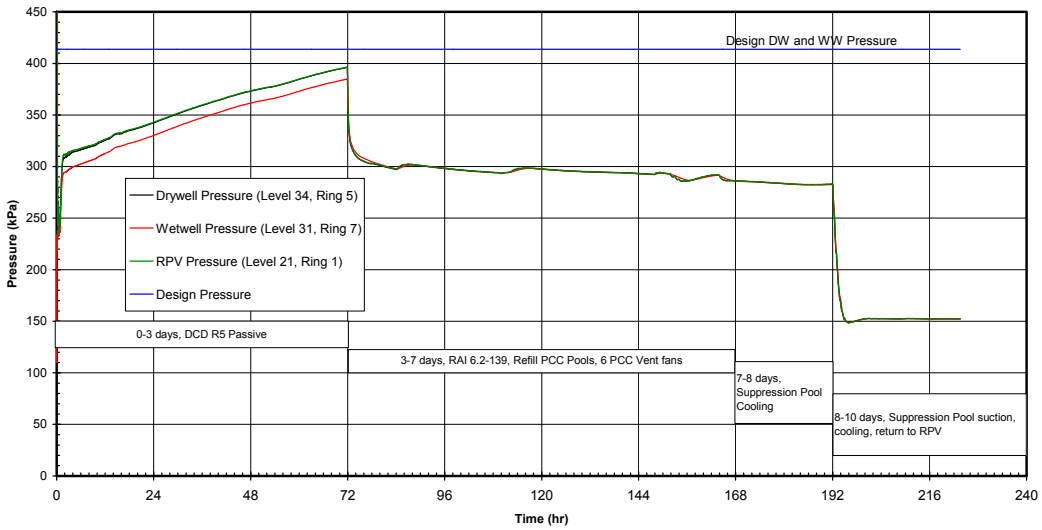

Figure 6.2-14e11. Containment Pressure Response – Post-LOCA Containment Cooling and Recovery

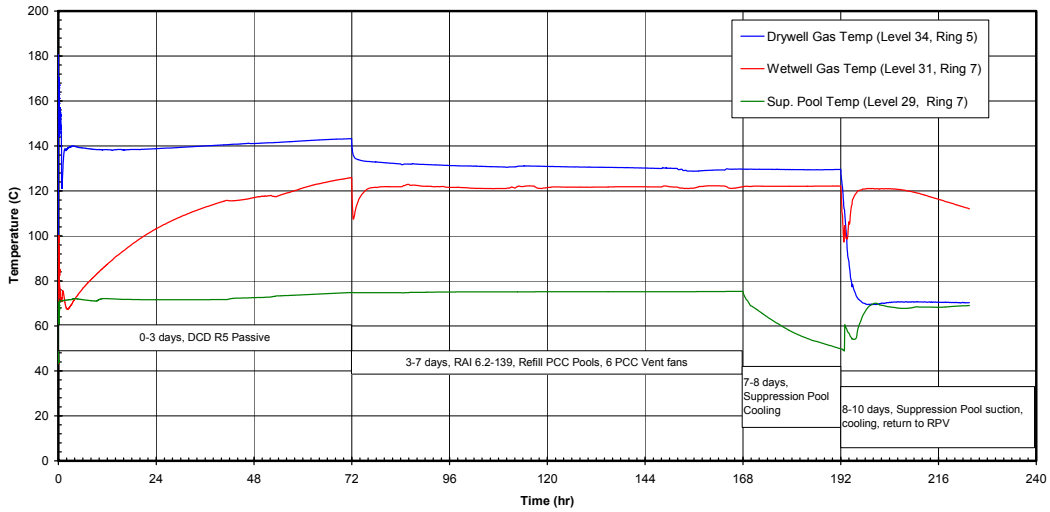

Figure 6.2-14e12. Containment Temperature Response – Post-LOCA Containment Cooling and Recovery