AREVA NP
FUEL SECTOR
Design & Sales Business Unit

AREVA

Mr. Director of industrial activities and transport
ASN/DIT
10 route du Panorama
92266 FONTENAY AUX ROSES CEDEX

Our ref.: D-FDE-09-01452
Your ref.: /
Contact: N. Guibert,
Phone number: 33.4.72.74.88.90
Fax number: 33.4.72.74.81.08
E-mail: nicolas.guibert@areva.com

Lyon, July the 17th 2009

Subject: ***Transport of radioactive materials- Request of approval of content fissile material type A- Package FCC3***

/1/ Approval Certificate F-347-IF-96 (Bf)
/2/ Note FFDC05297 rev.A
/3/ Safety Analysis Report TFXDC2159 revD
/4/ Approval Certificate F-347-IF-96 (Cg)

Dear Sir,

The FCC3 package is currently approved as type IP2 fissile package model /1/ until 31 Januar 2010. This approval is currently being renewed in order to ensure the continuity of the various validations and therefore of transports for 2010.

Transports of fresh fuel produced by the Areva US manufacturing plants are planned for the month of April 2010. To effectuate these transports, an approval validation of type A in USA is necessarily. Therefore, I have the honor to request an approval type A based on the note compliance with the Type A fissile conformity note /2/, and on the safety report of FCC3 container /3/ no later than 1st September 2009.

Attached to this letter, please find our project of certificate. It is the same as the certificate /4/, restricted to the enriched natural uranium (ENU).content.

Best regards,

Signature numérique de Gabriel LEROY
Motif : par intérim

Denis Pachtem
Chief departement
« Fuel Services »

Enclosure:
-FFDC05297 revA, FCC3 shipping container- Compliance to IAEA regulatory TYPE A FISSLE model
-Project license Type A fissile.

Distribution: M-T Lizot, A. Vartanian (ASN), S. Fourgeaud (IRSN), G. Leroy, C Sanders, P. Faye, H. Vaudray, E. Van schel (Areva NP), R Boyle (DOT).

The Competent French Authority,

in view of the application submitted by **AREVA NP** by letter D-FDE-09-01452, Dated July 17th 2009 ;

in view of the safety file TFX/DC/2159 Rev D, completed by AREVA NP report FFDC03125 revision A dated August 23th 2006 and AREVA NP report FFDC03077 revision B dated August 23th 2006;

hereby certifies that the package design consisting of by the FCC-3 cask described in appendix 0 in revision a and loaded with:

:

- a maximum 2 PWR 17 x 17 12 ft fresh fuel assemblies, in version 1 of the cask, as described in appendix 1a ;
- or a maximum of 2 boxes containing PWR 17 x 17 12 ft fresh unassembled fuel rods, in version 1 of the cask, as described in appendix 5a ;
- or a maximum 2 PWR 17 x 17 12 ft fresh fuel assemblies, in version 1 of the cask, as described in appendix 9a ;
- or a maximum of 2 boxes containing PWR 17 x 17 12 ft fresh unassembled fuel rods, in version 1 of the cask, as described in appendix 11a ;

is compliant as a **type A Industrial package design containing fissile materials** with the regulations, agreements or recommendations hereafter:

- Regulations for the safe transport of radioactive material of International Agency of Energy Atomic; Safety requirements No. TS-R-1 (1996 edition revised);
- European Agreement on the International Carriage of Dangerous Goods by Road (ADR);
- regulation concerning international rail transportation of dangerous goods (RID);
- regulation for the transportation of dangerous goods on the Rhine (ADNR);
- International Maritime Code for dangerous goods of the international Maritime Organisation (IMDG IMO's code);
- order of June 1st 2001 amended concerning the shipping of dangerous goods by road (ADR order);
- order of June 5th 2001 amended concerning the shipping of dangerous goods by rail (RID order);
- order of December 5th 2002 (ADNR order) amended concerning the shipping of dangerous goods by internal waterway;
- order of November 23rd 1987 amended concerning the safety of ships (RSN order), division 411.

This certificate does not exempt the shipper from observing the requirements established by the authorities of the countries through or towards the territory of which the package will be transported.

This certificate cancels and replaces since the 11th September 2009 the certificate F/347/AF-96 (Ch) dated from the 31st August 2010.

The validity of this certificate expires on: **December 31st 2010**.

Registration Nr: **ASN/DIT/0542/2009**

PARIS, on the 11th September 2009

for the Minister of the Economy,
Finances and Industry,
and for delegation,

J .L. LACHAUME

for the Minister of Ecology
and Sustainable Development,
and for delegation,

J.L. LACHAUME

SUMMARY OF THE ISSUES OF THE CERTIFICATE

Issue	Expiration date	**Purpose of issue and modifications**	Authority	**Ref. of the certificate**	**Revision**							
					corps	t	0	1	2	3	4	5
31/01/00	31/01/05	First agreement	DGSNR	F/347/IF-85	Aa	-	a	a	a	a	a	-
27/11/02	31/01/05	Extension	DGSNR	F/347/IF-85	Ab	-	b	-	-	b	b	-
12/02/04	31/01/05	Extension	DGSNR	F/347/IF-85	Ac	-	b	c	c	c	c	-
30/12/04	31/01/10	Prorogation	DGSNR	F/347/IF-96	Bd	-	d	d	d	d	d	d
20/07/05	31/01/10	Extension	DGSNR	F/347/IF-96	Be	-	e	e	e	e	e	e
02/10/06	31/01/10	Extension	DGSNR	F/347/IF-96	Bf	-	e	e	e	e	e	e
15/07/09	31/12/10	Administrative prorogation	ASN	F/347/IF-96	Cg	-	e	g	g	g	g	g
31/08/09	31/12/10	Extension	ASN	F/347/AF-96	Ch	-	e	g	g	g	g	g
11/09/09	31/12/10	Extension	ASN	F/347/AF-96	Ci	-	f	h	h	h	h	h

Revision							
corps	6	7	8	9	10	11	12
Aa	-	-	-				
Ab	-	-	-				
Ac	-	-	-				
Bd	d	d	d				
Be	e	e	e				
Bf	e	e	e	f	f	f	f
Cg	g	g	g	g	g	g	g
Ch	g	g	g	g	g	g	g
Ci	h	h	h	h	h	h	h

A FDE_09_01164

RÉPUBLIQUE FRANÇAISE

AUTORITÉ DE SÛRETÉ NUCLÉAIRE

DIRECTION DES ACTIVITES INDUSTRIELLES ET DU TRANSPORT

Fontenay-aux-Roses, le 11 septembre 2009

Réf. : ASN-DIT-0542-2009
Affaire suivie par : Laurence GOZALO
Tél : 01.43.19.70.59
Fax : 01.43.19.70.27
Mel : laurence.gozalo@asn.fr

Monsieur le directeur
AREVA NP
10, rue Juliette Récamier
69456 Lyon Cedex 06

A l'attention de M. Gabriel LEROY

BORDEREAU DE TRANSMISSION

Réf. : Lettre AREVA NP FDE-09-01452 du 17 juillet 2009

DESIGNATION DES PIECES	NOMBRE DE PIECES	OBSERVATIONS
Objet : Transport de matières radioactives *Emballage FCC3* Certificat d'agrément F/347/AF-96 (Ci)	1	Le certificat F/347/AF-96 (Ch) a été émis avec un certain nombre d'erreurs dont certaines (incides des annexes) impactaient les premières pages. La version ci-jointe en est expurgée

Pour le responsable de la direction
des activités industrielles et du transport,
le chargé d'affaires transport

Laurence GOZALO

Copies : *M. Nicolas GUIBERT TN International*
M. François MARVAUDTN International
IRSN/DSU/SSTC/BEST

AUTORITÉ DE SÛRETÉ NUCLÉAIRE

CERTIFICAT D'AGRÉMENT D'UN MODÈLE DE COLIS

F/347/AF-96 (Ci)

L'Autorité Compétente Française,

Vu la demande présentée par la société **AREVA NP** par la lettre FDE-09-01452 du 17 juillet 2009 ;

Vu le dossier de sûreté TFX/DC/2159 rév. D, complété par les notes AREVA NP FFDC03125 indice A du 23 août 2006, AREVA NP FFDC03077 indice B du 23 août 2006, et AREVA NP FFDC05297 indice A,

Certifie que le modèle de colis constitué par l'emballage **FCC3** décrit ci-après dans l'annexe 0 à l'indice f et chargé :

- d'au maximum 2 assemblages combustibles REP 17 x 17 neufs, dans la version 1 de l'emballage, tels que décrits en annexe 1h ;
- ou d'au maximum 2 assemblages combustibles REP 15x15 neufs, dans la version 1 de l'emballage, tels que décrits en annexe 2h ;
- ou d'au maximum 2 assemblages combustibles REP 14x14 8 pieds neufs, dans la version 2 de l'emballage, tels que décrits en annexe 3h ;
- ou d'au maximum 2 assemblages combustibles REP 14x14 10 pieds neufs, dans la version 2 de l'emballage, tels que décrits en annexe 4h ;
- ou d'au maximum 2 boîtes contenant des crayons combustibles REP 17 x 17 neufs et non assemblés, dans la version 1 de l'emballage, tels que décrits en annexe 5h ;
- ou d'au maximum 2 boîtes contenant des crayons combustibles REP 15x15 neufs et non assemblés, dans la version 1 de l'emballage, tels que décrits en annexe 6h ;
- ou d'au maximum 2 boîtes contenant des crayons combustibles REP 14x14 8 pieds neufs et non assemblés, dans la version 1 de l'emballage, tels que décrits en annexe 7h ;
- ou d'au maximum 2 boîtes contenant des crayons combustibles REP 14x14 10 pieds neufs et non assemblés, dans la version 1 de l'emballage, tels que décrits en annexe 8h ;
- ou d'au maximum 2 assemblages combustibles REP 17 x 17 neufs, dans la version 1 de l'emballage, tels que décrits en annexe 9h ;
- ou d'au maximum 2 assemblages combustibles REP 15x15 neufs, dans la version 1 de l'emballage, tels que décrits en annexe 10h ;
- ou d'au maximum 2 boîtes contenant des crayons combustibles REP 17 x 17 neufs et non assemblés, dans la version 1 de l'emballage, tels que décrits en annexe 11h ;
- ou d'au maximum 2 boîtes contenant des crayons combustibles REP 15x15 neufs et non assemblés, dans la version 1 de l'emballage, tels que décrits en annexe 12h,

est conforme en tant que modèle de colis de type **A chargé de matières fissiles** aux prescriptions des règlements, accords ou recommandations ci-après énumérés :

- règlement de transport des matières radioactives de l'Agence Internationale de l'Énergie Atomique, collection normes de sûreté, N°TS-R-1, édition de 1996 (révisée) ;
- accord européen relatif au transport international des marchandises dangereuses par route (ADR) ;
- règlement concernant le transport international ferroviaire des marchandises dangereuses (RID) ;
- règlement pour le transport des matières dangereuses sur le Rhin (ADNR) ;

www.asn.fr
6, place du Colonel Bourgoin · 75572 Paris cedex 12
Téléphone 01 40 19 86 00 · Fax 01 40 19 86 69

- code maritime international des marchandises dangereuses (code IMDG de l'OMI) ;
- arrêté du 29 mai 2009 relatif aux transports de marchandises dangereuses par voies terrestres (arrêté TMD) ;
- arrêté du 5 décembre 2002 modifié relatif au transport des marchandises dangereuses par voie de navigation intérieure (arrêté ADNR) ;
- arrêté du 23 novembre 1987 modifié relatif à la sécurité des navires, règlement annexé, division 411 (arrêté RSN).

Le présent certificat ne dispense pas l'expéditeur d'observer les prescriptions établies par les autorités des pays à travers ou vers le territoire desquels le colis sera transporté.

Le présent certificat **annule et remplace** à la date du 11 septembre 2009 la décision F/347/AF-96 (Ch) du 31 août 2009.

La validité du présent certificat expire le : **31 décembre 2010**

Numéro d'enregistrement : **ASN/DIT/0542/2009**

Paris, le 11 septembre 2009

Pour le Président de l'ASN et par délégation,
le directeur général adjoint

J.-L. Lachaume

RECAPITULATIF DES EMISSIONS DU CERTIFICAT

émission	expiration	type d'émission et modifications apportées	autorité	cote du certificat	indice de révision							
					corps	T	0	1	2	3	4	5
31/01/00	31/01/05	Premier agrément	DGSNR	F/347/IF-85	Aa	-	a	a	a	a	a	-
27/11/02	31/01/05	Extension	DGSNR	F/347/IF-85	Ab	-	b	-	-	b	b	-
12/02/04	31/01/05	Extension	DGSNR	F/347/IF-85	Ac	-	b	c	c	c	c	-
30/12/04	31/01/10	Prorogation	DGSNR	F/347/IF-96	Bd	-	d	d	d	d	d	D
20/07/05	31/01/10	Extension	DGSNR	F/347/IF-96	Be	-	e	e	e	e	e	E
02/10/06	31/01/10	Extension	DGSNR	F/347/IF-96	Bf	-	e	e	e	e	e	E
15/07/09	31/12/10	Prorogation administrative	ASN	F/347/IF-96	Cg	-	e	g	g	g	g	G
31/08/09	31/12/10	Extension	ASN	F/347/AF-96	Ch	-	e	g	g	g	g	G
11/09/09	31/12/10	Extension	ASN	F/347/AF-96	Ci	-	f	h	h	h	h	h

indice de révision							
corps	6	7	8	9	10	11	12
Aa	-	-	-				
Ab	-	-	-				
Ac	-	-	-				
Bd	d	d	d				
Be	e	e	e				
Bf	e	e	e	f	f	f	f
Cg	g	g	g	g	g	g	g
Ch	g	g	g	g	g	g	g
Ci	h	h	h	h	h	h	h

ANNEXE 0

EMBALLAGE FCC3

1. DEFINITION DE L'EMBALLAGE

L'emballage est conçu, fabriqué, inspecté, testé, maintenu et utilisé en conformité avec le dossier de sûreté TFX/DC/2159 rév. D.

L'emballage, de forme générale cylindrique, est présenté sur la figure 0.1.

Le plan de concept de l'emballage est 229K0100 ou 229K0200 pour sa version 1 et 229K0300 pour sa version 2.

Les dimensions extérieures hors tout de l'emballage sont :

- longueur : 4923 +/- 8 mm ;
- diamètre externe : 1048 +/- 4 mm.

La masse maximale admissible de l'emballage chargé en transport est de 4385 kg.

L'emballage est constitué des principaux sous-ensembles suivants :

1.1 Corps

L'emballage FCC3 est constitué d'une enveloppe cylindrique, à axe horizontal, composée de deux demi-coquilles liées comprenant :

- un berceau métallique constitué de deux longerons et suspendu à la coquille inférieure par l'intermédiaire de plots élastiques ;
- un équipement interne reposant sur le berceau et destiné à recevoir l'un des contenus.

Cet équipement interne est composé de :

- un châssis-support dont la structure rigide en forme de "T" inversé est destinée à recevoir le chargement ; la partie chaudronnée du châssis contient de la résine neutrophage ; sur la plaque de pied, un axe de basculement autorise la mise en position verticale du châssis-support pour charger ou décharger les assemblages ;
- deux portes en forme de "L" contenant de la résine neutrophage sont fixées sur le châssis-support et se referment sur le contenu ;
- une plaque de pied supportant les assemblages de combustible au moment des chargements et déchargements - châssis-support en position verticale ;
- une plaque de tête en deux parties permettant de fermer les cavités et de caler les assemblages à l'autre extrémité.

1.2 Système de fermeture

Les deux demi-coquilles sont liées par des brides : une cornière spéciale sur la coquille inférieure permet la pose des 30 boulons qui assurent la liaison des deux cylindres.

Les portes et les plaques de tête sont liées au châssis par des broches à bille. La plaque de pieds est vissée sur le châssis.

1.3 Systèmes amortisseurs

Deux absorbeurs d'énergie axiale sont fixés à l'extrémité de la coquille supérieure. Ils sont constitués de deux boîtes métalliques contenant un bloc de balsa.

1.4 Éléments de manutention et arrimage

La manutention peut être effectuée en conditions normales de sécurité par des engins de levage classiques, à l'aide d'élingues et de manilles ou de crochets. Trois modes de levage sont possibles :

- par les 4 oreilles de levage, soudées sur la coquille supérieure, pour la manutention du colis chargé ou à vide et du couvercle seul lors des opérations d'ouverture : ces boîtes de levage sont constituées d'une tôle pliée portant un orifice permettant le passage d'une manille ou d'un crochet ;
- par des passages de fourches de chariot élévateur situés sous la coquille inférieure.

De plus, l'emballage est conçu de façon à pouvoir être convenablement arrimé pendant le transport par l'intermédiaire des oreilles de levage.

1.5 Fonctions de sûreté

- **Le système d'isolement est composé** des éléments décrits dans les annexes de contenus et, pour la partie emballage, de la structure du conteneur constituée des éléments ci-dessous :
  - l'équipement interne : il est composé du châssis, des portes et des plaques d'extrémité, ainsi que du système de calage radial et axial dans le cas des boîtes à crayons, l'ensemble formant ainsi deux cavités neutroniques,
  - la résine neutrophage contenue dans les portes et le châssis,
  - les coquilles inférieures et supérieures qui assurent la protection de l'équipement interne en CNT et CAT.
- **La protection du combustible contre les chocs** est assurée par les deux demi-coquilles ainsi que par l'équipement interne.
- **La protection contre l'incendie** est assurée par les deux demi-coquilles, l'équipement interne ainsi que par la résine contenue dans les portes et le châssis.

2. MESURES QUE L'EXPEDITEUR DOIT PRENDRE AVANT L'EXPEDITION DU COLIS

L'emballage doit être utilisé suivant des procédures conformes aux instructions d'utilisation des chapitres 4 et 8 du dossier de sûreté.

Avant chaque expédition, l'expéditeur doit vérifier que tous les contrôles suivants ont été correctement effectués conformément à une liste pré-établie à partir des conditions d'utilisation décrites au chapitre 4.2 du dossier de sûreté, que les résultats de ces contrôles satisfont aux critères spécifiés et que la liste à été régulièrement émargée :

- vérifier que l'emballage a été entretenu conformément au paragraphe 3 du présent certificat ;
- vérifier la conformité du contenu au présent certificat d'agrément ;
- vérifier la compatibilité du contenu avec la version de l'emballage ;
- vérifier les couples de serrage des boulons maintenant la liaison entre les deux demi-coquilles : 5 +/- 1 m.daN ;
- contrôler la présence de tous les axes et goupilles nécessaires à la bonne fermeture de l'emballage ;
- contrôler la contamination des surfaces externes du colis ;
- contrôler l'intensité de rayonnement maximale autour du colis, au contact et à 1 m ;
- vérifier la mise en place des scellés condamnant l'accès aux orifices ;
- vérifier la présence des étiquettes et marquages réglementaires (la marque d'identification du colis est « F/347/AF-96 » et le marquage de l'emballage est « TYPE A ») ;
- vérifier que le transport se fait sous utilisation exclusive ;

- vérifier en cas de transport fluvial que le nombre total d'A_2 des contenus des colis disposés dans une même cale ou un même compartiment est inférieur à 100 ;
- le colis doit être arrimé en position horizontale sur son moyen de transport.

3. PROGRAMME D'ENTRETIEN

L'entretien de l'emballage est décrit au chapitre 8 du dossier de sûreté.

En particulier, au maximum tous les 50 cycles ou tous les 5 ans, selon ce qui est le plus limitatif :

- on vérifiera le bon état général de l'emballage et tout composant non conforme sera remplacé ;
- on procédera au contrôle par ressuage des zones de préhension pour levage.

Tout emballage qui ne satisfait pas aux critères spécifiés dans le programme d'entretien doit être mis hors service jusqu'à ce que l'action corrective appropriée ait été effectuée.

4. NOTIFICATION ET ENREGISTREMENT DES NUMÉROS DE SÉRIE

Toute mise hors d'usage ou changement de propriétaire d'un emballage devra être porté à la connaissance des autorités compétentes. A cet effet, le propriétaire qui se dessaisit d'un emballage transmettra le nom du nouvel acquéreur.

5. ASSURANCE DE LA QUALITE

Les principes d'Assurance Qualité à appliquer lors de la conception, la fabrication, l'inspection, les essais, la maintenance et l'utilisation du colis doivent être conformes à ceux décrits dans le chapitre 7 du dossier de sûreté.

DRAWING WITHELD UNDER 10 CFR 2.390

ANNEXE 1

ASSEMBLAGES COMBUSTIBLES REP NEUFS

Le dossier de sûreté justifiant ce contenu est TFX/DC/2159 rév. D.

Ce contenu doit être chargé dans un emballage FCC 3 version 1.

1. DEFINITION DU CONTENU RADIOACTIF AUTORISE

1.1 Caractéristiques des assemblages combustibles

Le contenu radioactif autorisé, décrit au chapitre 2.2 du dossier de sûreté, est constitué d'au maximum deux assemblages combustibles neufs, à destination des réacteurs à eau pressurisée, tels que décrits ci-après :

Caractéristiques des assemblages avant irradiation :	**17x17 12 pieds**
type de réseau	17x17
pas nominal du réseau (mm)	12,6
masse totale maximale de l'assemblage avec ou sans grappe (kg)	751
masse maximale de métal lourd par assemblage (kg)	521
longueur active nominale (mm)	3658
nombre maximal de crayons combustibles	288(1)
Caractéristiques des crayons combustibles avant irradiation :	
Gaine : matériau	Alliage de Zirconium
– épaisseur minimale (mm)	0,52
– diamètre extérieur minimal (mm)	9,46
Pastilles :	UNE
– diamètre maximal (mm)	8,20
– densité maximale de l'oxyde (97,5 % de la densité théorique)	10,69
– enrichissement initial maximal ($^{235}U/U_{total}$) (%)	5
– rapport massique maximal $^{232}U/U_{total}$ (%)	5.10^{-8}
– rapport massique maximal $^{234}U/U_{total}$ (%)	0,055
– rapport massique maximal $^{236}U/U_{total}$ (%)	0,05
Pression interne absolue maximale des crayons à 20 °C (bars)	32,7

(1) Ce nombre de crayons correspond au nombre maximum de crayons susceptibles d'être insérés dans une structure (squelette d'assemblage ou carquois), y compris dans les tubes guides.

Les propriétés de résistance mécanique des matériaux de gainage des crayons doivent respecter l'un des critères suivants:

	1	2	3	4	5
$R_{p0.2}$ (MPa) ≥	520	455	350	250	290
R_m (MPa) ≥	710	590	480	400	440
A_t (%)≥	12	12	15	25	20

1.2 Conditions de chargement

Tous les assemblages d'un chargement doivent vérifier les conditions définies dans le tableau ci-dessous.

type d'assemblage	nombre maximal d'assemblages autorisé au chargement	enrichissement initial maximal par crayon de chaque assemblage du chargement ($^{235}U/U_{total}$)	nombre minimal de crayons de chaque assemblage du chargement (1)
17x17	2	5	264

(1) Les assemblages incomplets peuvent être équipés de barres pleines en acier (ou Zy) contenant éventuellement un poison neutronique. On entend par l'appellation « nombre de crayons par assemblage » le nombre total de crayons combustibles et de barres en acier (ou Zy).

Tous les assemblages du chargement, sauf un, peuvent être remplacés par des squelettes d'assemblages.

La présence de matériaux plus hydrogénés que l'eau dans l'emballage n'est pas autorisée.

Activité maximale par emballage : L'activité maximale de ce contenu doit être inférieure à 1 A_2.

État physique : Assemblages de crayons combustibles constitués par des pastilles frittées placées dans une gaine en alliage de Zirconium respectant un des deux critères donnés au paragraphe 1.1 de la présente annexe.

Forme chimique : Pastilles en oxyde d'uranium (UO_2) et/ou pastilles combustibles composées d'un mélange d'UO_2 dont l'enrichissement en U235 ne dépasse pas 5% et d'un corps jouant le rôle de poison neutronique avec une densité du mélange n'excédant pas 10,69 g/cm³.

Forme spéciale : Les matières transportées ne sont pas sous forme spéciale.

2. ETUDE DE CRITICITE

Elle fait l'objet de la note FFDC00817, donnée en annexe 12 du dossier de sûreté.
Les hypothèses prises en compte sont les suivantes :

- non respect de l'intégrité géométrique des assemblages en CAT ;
- vidange différentielle ;
- pénétration d'eau dans tous les espaces vides.

Indice de Sûreté Criticité (CSI) : 0,63 (Nombre N=80)

Précautions particulières à prendre au moment du chargement au réacteur : Néant

Précautions particulières à prendre au cours du transport : Néant

Le système d'isolement considéré est constitué des éléments décrits en annexe 0 et, pour la partie contenu, des éléments suivants :

- les caractéristiques des assemblages combustibles telles que décrites dans le tableau du paragraphe 1.1 de la présente annexe ;
- les tubes de gainage qui garantissent le confinement de la matière fissile en situation accidentelle ;
- la structure de l'assemblage (grilles, embouts) ;
- le caractère complet des assemblages : les éventuels crayons fissiles manquants sont remplacés par des crayons inertes.

ANNEXE 2

ASSEMBLAGES COMBUSTIBLES REP NEUFS

Le dossier de sûreté justifiant ce contenu est TFX/DC/2159 rév. D.

Ce contenu doit être chargé dans un emballage FCC 3 version 1.

1. DEFINITION DU CONTENU RADIOACTIF AUTORISE

1.1 Caractéristiques des assemblages combustibles

Le contenu radioactif autorisé, décrit au chapitre 2.2 du dossier de sûreté, est constitué d'au maximum deux assemblages combustibles neufs, à destination des réacteurs à eau pressurisée, tels que décrits ci-après :

Caractéristiques des assemblages avant irradiation :	**15x15**
type de réseau	15x15
pas nominal du réseau (mm)	14,3
masse totale maximale de l'assemblage avec ou sans grappe (kg)	739
masse maximale de métal lourd par assemblage (kg)	519
longueur active nominale (mm)	3658
nombre maximal de crayons combustibles	224(1)
Caractéristiques des crayons combustibles avant irradiation :	
Gaine : matériau	Alliage de Zirconium
– épaisseur minimale (mm)	0,57
– diamètre extérieur minimal (mm)	10,68
Pastilles :	UNE
– diamètre maximal (mm)	9,31
– densité maximale de l'oxyde (97,5 % de la densité théorique)	10,69
– enrichissement initial maximal ($^{235}U/U_{total}$) (%)	5
– rapport massique maximal $^{232}U/U_{total}$ (%)	5.10^{-8}
– rapport massique maximal $^{234}U/U_{total}$ (%)	0,055
– rapport massique maximal $^{236}U/U_{total}$ (%)	0,05
Pression interne absolue maximale des crayons à 20 °C (bars)	32,7

(1) Ce nombre de crayons correspond au nombre maximum de crayons susceptibles d'être insérés dans une structure (squelette d'assemblage ou carquois), y compris dans les tubes guides.

Les propriétés de résistance mécanique des matériaux de gainage des crayons doivent respecter l'un des critères suivants:

	1	2	3	4	5
$R_{p0.2}$ (MPa) ≥	520	455	350	250	290
R_m (MPa) ≥	710	590	480	400	440
A_t (%)≥	12	12	15	25	20

1.2 Conditions de chargement

Tous les assemblages d'un chargement doivent vérifier les conditions définies dans le tableau ci-dessous.

type d'assemblage	nombre maximal d'assemblages autorisé au chargement	enrichissement initial maximal par crayon de chaque assemblage du chargement ($^{235}U/U_{total}$)	nombre minimal de crayons de chaque assemblage du chargement (1)
15x15	2	5	204

(1) Les assemblages incomplets peuvent être équipés de barres pleines en acier (ou Zy) contenant éventuellement un poison neutronique. On entend par l'appellation « nombre de crayons par assemblage » le nombre total de crayons combustibles et de barres en acier (ou Zy).

Tous les assemblages du chargement, sauf un, peuvent être remplacés par des squelettes d'assemblages.

La présence de matériaux plus hydrogénés que l'eau dans l'emballage n'est pas autorisée.

Activité maximale par emballage : L'activité maximale de ce contenu doit être inférieure à 1 A_2.

État physique : Assemblages de crayons combustibles constitués par des pastilles frittées placées dans une gaine en alliage de Zirconium respectant un des deux critères donnés au paragraphe 1.1 de la présente annexe.

Forme chimique : Pastilles en oxyde d'uranium (UO_2) et/ou pastilles combustibles composées d'un mélange d'UO_2 dont l'enrichissement en U235 ne dépasse pas 5% et d'un corps jouant le rôle de poison neutronique avec une densité du mélange n'excédant pas 10,69 g/cm³.

Forme spéciale : Les matières transportées ne sont pas sous forme spéciale.

2. ETUDE DE CRITICITE

Elle fait l'objet de la note FFDC00817, donnée en annexe 12 du dossier de sûreté.
Les hypothèses prises en compte sont les suivantes :

- non respect de l'intégrité géométrique des assemblages en CAT ;
- vidange différentielle ;
- Pénétration d'eau dans tous les espaces vides.

Indice de Sûreté Criticité (CSI) : 0,63 (Nombre N=80)

Précautions particulières à prendre au moment du chargement au réacteur : Néant

Précautions particulières à prendre au cours du transport : Néant

Le système d'isolement considéré est constitué des éléments décrits en annexe 0 et, pour la partie contenu, des éléments suivants :

- les caractéristiques des assemblages combustibles telles que décrites dans le tableau du paragraphe 1.1 de la présente annexe ;
- les tubes de gainage qui garantissent le confinement de la matière fissile en situation accidentelle ;
- la structure de l'assemblage (grilles, embouts) ;
- le caractère complet des assemblages : les éventuels crayons fissiles manquants sont remplacés par des crayons inertes.

ANNEXE 3

ASSEMBLAGES COMBUSTIBLES REP NEUFS

Le dossier de sûreté justifiant ce contenu est TFX/DC/2159 rév. D.

Ce contenu doit être chargé dans un emballage FCC 3 version 2.

1. DEFINITION DU CONTENU RADIOACTIF AUTORISE

1.1 Caractéristiques des assemblages combustibles

Le contenu radioactif autorisé, décrit au chapitre 2.2 du dossier de sûreté, est constitué d'au maximum deux assemblages combustibles neufs, à destination des réacteurs à eau pressurisée, tels que décrits ci-après :

Caractéristiques des assemblages avant irradiation :	**14x14 8 pieds**
type de réseau	14x14
pas nominal du réseau (mm)	14,1
masse totale maximale de l'assemblage avec ou sans grappe (kg)	448
masse maximale de métal lourd par assemblage (kg)	305
longueur active nominale (mm)	2413
nombre maximal de crayons combustibles	195(1)
Caractéristiques des crayons combustibles avant irradiation :	
Gaine : matériau	Alliage de Zirconium
– épaisseur minimale (mm)	0,57
– diamètre extérieur minimal (mm)	10,68
Pastilles :	UNE
– diamètre maximal (mm)	9,40
– densité maximale de l'oxyde (97,5 % de la densité théorique)	10,69
– enrichissement initial maximal ($^{235}U/U_{total}$) (%)	5
– rapport massique maximal $^{232}U/U_{total}$ (%)	5.10^{-8}
– rapport massique maximal $^{234}U/U_{total}$ (%)	0,055
– rapport massique maximal $^{236}U/U_{total}$ (%)	0,05
Pression interne absolue maximale des crayons à 20 °C (bars)	32,7

(1) Ce nombre de crayons correspond au nombre maximum de crayons susceptibles d'être insérés dans une structure (squelette d'assemblage ou carquois), y compris dans les tubes guides.

Les propriétés de résistance mécanique des matériaux de gainage des crayons doivent respecter l'un des critères suivants:

	1	2	3	4	5
$R_{p0.2}$ (MPa) ≥	520	455	350	250	290
R_m (MPa) ≥	710	590	480	400	440
A_t (%)≥	12	12	15	25	20

1.2 Conditions de chargement

Tous les assemblages d'un chargement doivent vérifier les conditions définies dans le tableau ci-dessous.

type d'assemblage	nombre maximal d'assemblages autorisé au chargement	enrichissement initial maximal par crayon de chaque assemblage du chargement ($^{235}U/U_{total}$)	nombre minimal de crayons de chaque assemblage du chargement (1)
14x14	2	5	179

(1) Les assemblages incomplets peuvent être équipés de barres pleines en acier (ou Zy) contenant éventuellement un poison neutronique. On entend par l'appellation « nombre de crayons par assemblage » le nombre total de crayons combustibles et de barres en acier (ou Zy).

Tous les assemblages du chargement, sauf un, peuvent être remplacés par des squelettes d'assemblages.

La présence de matériaux plus hydrogénés que l'eau dans l'emballage n'est pas autorisée.

Activité maximale par emballage : L'activité maximale de ce contenu doit être inférieure à 1 A_2.

État physique : Assemblages de crayons combustibles constitués par des pastilles frittées placées dans une gaine en alliage de Zirconium respectant un des deux critères donnés au paragraphe 1.1 de la présente annexe.

Forme chimique : Pastilles en oxyde d'uranium (UO_2) et/ou pastilles combustibles composées d'un mélange d'UO_2 dont l'enrichissement en U235 ne dépasse pas 5% et d'un corps jouant le rôle de poison neutronique avec une densité du mélange n'excédant pas 10,69 g/cm³.

Forme spéciale : Les matières transportées ne sont pas sous forme spéciale.

2. ETUDE DE CRITICITE

Elle fait l'objet de la note FFDC01106, donnée en annexe 12 du dossier de sûreté.

Les hypothèses prises en compte sont les suivantes :

- non respect de l'intégrité géométrique des assemblages en CAT ;
- vidange différentielle ;
- pénétration d'eau dans tous les espaces vides.

Indice de Sûreté Criticité (CSI) : 0 (Nombre N infini)

Précautions particulières à prendre au moment du chargement au réacteur : Néant

Précautions particulières à prendre au cours du transport : Néant

Le système d'isolement considéré est constitué des éléments décrits en annexe 0 et, pour la partie contenu, des éléments suivants :

- les caractéristiques des assemblages combustibles telles que décrites dans le tableau du paragraphe 1.1 de la présente annexe ;
- les tubes de gainage qui garantissent le confinement de la matière fissile en situation accidentelle ;

- la structure de l'assemblage (grilles, embouts) ;
- le caractère complet des assemblages : les éventuels crayons fissiles manquants sont remplacés par des crayons inertes.

ANNEXE 4

ASSEMBLAGES COMBUSTIBLES REP NEUFS

Le dossier de sûreté justifiant ce contenu est TFX/DC/2159 rév. D.

Ce contenu doit être chargé dans un emballage FCC 3 version 2.

1. DEFINITION DU CONTENU RADIOACTIF AUTORISE

1.1 Caractéristiques des assemblages combustibles

Le contenu radioactif autorisé, décrit au chapitre 2.2 du dossier de sûreté, est constitué d'au maximum deux assemblages combustibles neufs, à destination des réacteurs à eau pressurisée, tels que décrits ci-après :

Caractéristiques des assemblages avant irradiation :	**14x14 10 pieds**
type de réseau	14x14
pas nominal du réseau (mm)	14,1
masse totale maximale de l'assemblage avec ou sans grappe (kg)	557
masse maximale de métal lourd par assemblage (kg)	385
longueur active nominale (mm)	3048
nombre maximal de crayons combustibles	195(1)
Caractéristiques des crayons combustibles avant irradiation :	
Gaine : matériau	Alliage de Zirconium
– épaisseur minimale (mm)	0,57
– diamètre extérieur minimal (mm)	10,68
Pastilles :	UNE
– diamètre maximal (mm)	9,40
– densité maximale de l'oxyde (97,5 % de la densité théorique)	10,69
– enrichissement initial maximal ($^{235}U/U_{total}$) (%)	5
– rapport massique maximal $^{232}U/U_{total}$ (%)	5.10^{-8}
– rapport massique maximal $^{234}U/U_{total}$ (%)	0,055
– rapport massique maximal $^{236}U/U_{total}$ (%)	0,05
Pression interne absolue maximale des crayons à 20 °C (bars)	32,7

(1) Ce nombre de crayons correspond au nombre maximum de crayons susceptibles d'être insérés dans une structure (squelette d'assemblage ou carquois), y compris dans les tubes guides.

Les propriétés de résistance mécanique des matériaux de gainage des crayons doivent respecter l'un des critères suivants:

	1	2	3	4	5
$R_{p0.2}$ (MPa) ≥	520	455	350	250	290
R_m (MPa) ≥	710	590	480	400	440
A_t (%)≥	12	12	15	25	20

1.2 Conditions de chargement

Tous les assemblages d'un chargement doivent vérifier les conditions définies dans le tableau ci-dessous.

type d'assemblage	nombre maximal d'assemblages autorisé au chargement	enrichissement initial maximal par crayon de chaque assemblage du chargement ($^{235}U/U_{total}$)	nombre minimal de crayons de chaque assemblage du chargement (1)
14x14	2	5	179

(1) Les assemblages incomplets peuvent être équipés de barres pleines en acier (ou Zy) contenant éventuellement un poison neutronique. On entend par l'appellation « nombre de crayons par assemblage » le nombre total de crayons combustibles et de barres en acier (ou Zy).

Tous les assemblages du chargement, sauf un, peuvent être remplacés par des squelettes d'assemblages.

La présence de matériaux plus hydrogénés que l'eau dans l'emballage n'est pas autorisée.

Activité maximale par emballage : L'activité maximale de ce contenu doit être inférieure à 1 A_2

État physique : Assemblages de crayons combustibles constitués par des pastilles frittées placées dans une gaine en alliage de Zirconium respectant un des deux critères donnés au paragraphe 1.1 de la présente annexe.

Forme chimique : Pastilles en oxyde d'uranium (UO_2) et/ou pastilles combustibles composées d'un mélange d'UO_2 dont l'enrichissement en U235 ne dépasse pas 5% et d'un corps jouant le rôle de poison neutronique avec une densité du mélange n'excédant pas 10,69 g/cm³.

Forme spéciale : Les matières transportées ne sont pas sous forme spéciale.

2. ETUDE DE CRITICITE

Elle fait l'objet de la note FFDC01106, donnée en annexe 12 du dossier de sûreté.

Les hypothèses prises en compte sont les suivantes :

- non respect de l'intégrité géométrique des assemblages en CAT ;
- vidange différentielle ;
- pénétration d'eau dans tous les espaces vides.

Indice de Sûreté Criticité (CSI) : 0 (Nombre N infini)

Précautions particulières à prendre au moment du chargement au réacteur : Néant

Précautions particulières à prendre au cours du transport : Néant

Le système d'isolement considéré est constitué des éléments décrits en annexe 0 et, pour la partie contenu, des éléments suivants :

- les caractéristiques des assemblages combustibles telles que décrites dans le tableau du paragraphe 1.1 de la présente annexe ;
- les tubes de gainage qui garantissent le confinement de la matière fissile en situation accidentelle ;

- la structure de l'assemblage (grilles, embouts) ;
- le caractère complet des assemblages : les éventuels crayons fissiles manquants sont remplacés par des crayons inertes.

ANNEXE 5

CRAYONS COMBUSTIBLES REP NEUFS

Le dossier de sûreté justifiant ce contenu est TFX/DC/2159 rév. D.

Ce contenu doit être chargé dans un emballage FCC 3 version 1.

1. DEFINITION DU CONTENU RADIOACTIF AUTORISE

1.1 Caractéristiques des crayons combustibles

Le contenu radioactif autorisé, décrit au chapitre 2.3 du dossier de sûreté, est constitué de crayons combustibles neufs, à destination des réacteurs à eau pressurisée, tels que décrits ci-après :

Caractéristiques des crayons combustibles avant irradiation :	**17x17 12 pieds**
masse totale maximale par cavité (kg)	751
masse totale maximale des crayons par boîte (kg)	665
masse maximale de métal lourd par boîte (kg)	483(1)
longueur active nominale (mm)	3658
nombre maximal de crayons combustibles par boîte	267
Gaine : matériau	Alliage de Zirconium
– épaisseur minimale (mm)	0,52
– diamètre extérieur minimal (mm)	9,46
Pastilles :	UNE
– diamètre maximal (mm)	8,20
– densité maximale de l'oxyde (97,5 % de la densité théorique)	10,69
– enrichissement initial maximal ($^{235}U/U_{total}$) (%)	5
– rapport massique maximal $^{232}U/U_{total}$ (%)	5.10^{-8}
– rapport massique maximal $^{234}U/U_{total}$ (%)	0,055
– rapport massique maximal $^{236}U/U_{total}$ (%)	0,05
– teneur massique minimale en Gd_2O_3 des crayons gadoliniés (%)	2
Pression interne absolue maximale des crayons à 20 °C (bars)	32,7

(1) Cette masse maximale ne concerne que les contenus avec calage et les contenus gadoliniés.

Les propriétés de résistance mécanique des matériaux de gainage des crayons doivent respecter l'un des critères suivants:

	1	**2**	**3**	**4**	**5**
$R_{p0.2}$ (MPa) ≥	520	455	350	250	290
R_m (MPa) ≥	710	590	480	400	440
A_t (%)≥	12	12	15	25	20

1.2 Conditions de chargement

Tous les crayons d'un chargement doivent vérifier les conditions définies dans le tableau ci-dessous.

type de réseau	nombre maximal de crayons autorisé au chargement, par boîte	enrichissement initial maximal de chaque crayon du chargement ($^{235}U/U_{total}$)	nombre minimal de crayons du chargement (1)
17x17	267	5	Rangée complète de crayons combustibles ou inertes

(1) Les rangées incomplètes de crayons combustibles doivent être complétées par des barres en acier (ou Zy) contenant éventuellement un poison neutronique. On entend par l'appellation « nombre de crayons par boîte » le nombre total de crayons combustibles et de barres en acier (ou Zy).

La présence de matériaux plus hydrogénés que l'eau dans l'emballage n'est pas autorisée.

Activité maximale par emballage : L'activité maximale de ce contenu doit être inférieure à 1 A_2.

État physique : Crayons combustibles constitués par des pastilles frittées placées dans une gaine en alliage de Zirconium respectant un des deux critères donnés au paragraphe 1.1 de la présente annexe.

Forme chimique : Pastilles en oxyde d'uranium (UO_2) et/ou pastilles combustibles composées d'un mélange d'UO_2 dont l'enrichissement en U235 ne dépasse pas 5% et d'un corps jouant le rôle de poison neutronique avec une densité du mélange n'excédant pas 10,69 g/cm³.

Forme spéciale : Les matières transportées ne sont pas sous forme spéciale.

2. AMÉNAGEMENTS INTERNES

L'aménagement interne est une boîte à crayons, décrite au chapitre 2.3 du dossier de sûreté.

2.1 Boîtes à crayons

Les crayons non assemblés sont regroupés dans des boîtes à crayons versions FCC3 qui viennent s'insérer en lieu et place des assemblages à l'intérieur des FCC3 version 1.

La boîte est constituée d'une tôle pliée en U, fermée aux extrémités et renforcée par deux longerons soudés en partie supérieure de la tôle. Elle constitue un logement de section carrée, de section utile 214 x 214 mm².

Un système de calage axial et radial permet de s'adapter à la longueur des crayons et de les maintenir en position. Un schéma de principe est donné à la figure 5.1. Une description détaillée accompagnée de plans est fournie en annexe 1 du dossier de sûreté (note FFDC01038).

2.2 Cales

Un jeu de 2 cales assure le maintien longitudinal de la boîte dans la cavité (une cale de tête et une cale de pieds). La description détaillée des cales est donnée en annexe 1 du dossier de sûreté, dans la note FFDC01038.

3. ETUDE DE CRITICITE

Elle fait l'objet de la note FFDC01046, donnée en annexe 12 du dossier de sûreté.
Les hypothèses prises en compte sont les suivantes :

- vidange différentielle ;
- pénétration d'eau dans tous les espaces vides.

Indice de Sûreté Criticité (CSI) :

- cas du transport des crayons UO_2 avec calage radial et axial :
  - indice de sûreté-criticité : 0 (Nombre N infini),
  - précautions particulières à prendre au cours du transport : Néant
- cas du transport des crayons UO_2-Gd_2O_3 avec ou sans calage radial ni axial :
  - indice de sûreté-criticité : 0 (Nombre N infini),
  - précautions particulières à prendre au cours du transport : Néant ;
- cas du transport des crayons UO_2 en faible nombre, sans calage radial ni axial :
  - indice de sûreté-criticité : 50 (Nombre N = 1),
  - précautions particulières à prendre au cours du transport : respecter une masse maximale d'UO_2 de 20 kg par colis.

Le système d'isolement considéré est constitué des éléments décrits en annexe 0 et, pour la partie contenu, des éléments suivants :

- les caractéristiques des crayons combustibles telles que décrites dans le tableau du paragraphe 1.1 de la présente annexe ;
- les tubes de gainage qui garantissent le confinement de la matière fissile en situation accidentelle.

FIGURE 5.1
SCHEMA DE LA BOÎTE A CRAYONS

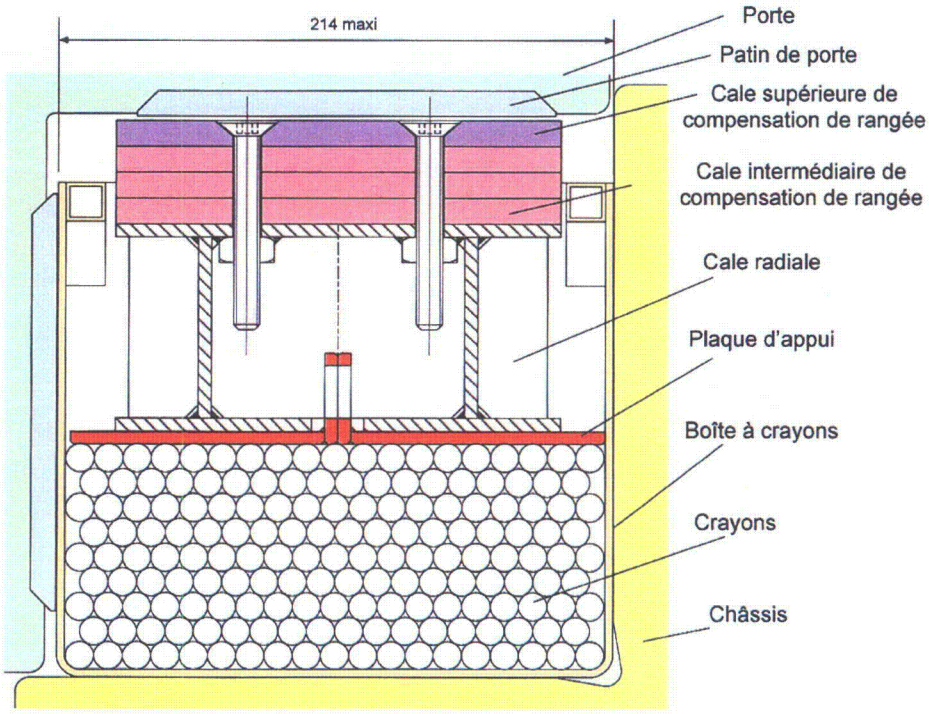

ANNEXE 6

CRAYONS COMBUSTIBLES REP NEUFS

Le dossier de sûreté justifiant ce contenu est TFX/DC/2159 rév. D.

Ce contenu doit être chargé dans un emballage FCC 3 version 1.

1. DEFINITION DU CONTENU RADIOACTIF AUTORISE

1.1 Caractéristiques des crayons combustibles

Le contenu radioactif autorisé, décrit au chapitre 2.3 du dossier de sûreté, est constitué de crayons combustibles neufs, à destination des réacteurs à eau pressurisée, tels que décrits ci-après :

Caractéristiques des crayons combustibles avant irradiation :	**15x15**
masse totale maximale par cavité (kg)	751
masse totale maximale des crayons par boîte(kg)	765
masse maximale de métal lourd par boîte (kg)	560(1)
longueur active nominale (mm)	3658
nombre maximal de crayons combustibles par boîte	241
Gaine : matériau	Alliage de Zirconium
– épaisseur minimale (mm)	0,57
– diamètre extérieur minimal (mm)	10,68
Pastilles :	UNE
– diamètre maximal (mm)	9,31
– densité maximale de l'oxyde (97,5 % de la densité théorique)	10,69
– enrichissement initial maximal ($^{235}U/U_{total}$) (%)	5
– rapport massique maximal $^{232}U/U_{total}$ (%)	5.10^{-8}
– rapport massique maximal $^{234}U/U_{total}$ (%)	0,055
– rapport massique maximal $^{236}U/U_{total}$ (%)	0,05
– teneur massique minimale en Gd_2O_3 des crayons gadoliniés (%)	2
Pression interne absolue maximale des crayons à 20 °C (bars)	32,7

(1) Cette masse maximale ne concerne que les contenus avec calage et les contenus gadoliniés.

Les propriétés de résistance mécanique des matériaux de gainage des crayons doivent respecter l'un des critères suivants:

	1	**2**	**3**	**4**	**5**
$R_{p0.2}$ (MPa) ≥	520	455	350	250	290
R_m (MPa) ≥	710	590	480	400	440
A_t (%)≥	12	12	15	25	20

1.2 Conditions de chargement

Tous les crayons d'un chargement doivent vérifier les conditions définies dans le tableau ci-dessous.

type de réseau	nombre maximal de crayons autorisé au chargement, par boîte	enrichissement initial maximal de chaque crayon du chargement ($^{235}U/U_{total}$)	nombre minimal de crayons du chargement (1)
15x15	241	5	Rangée complète de crayons combustibles ou inertes

(1) Les rangées incomplètes de crayons combustibles doivent être complétées par des barres en acier (ou Zy) contenant éventuellement un poison neutronique. On entend par l'appellation « nombre de crayons par boîte » le nombre total de crayons combustibles et de barres en acier (ou Zy).

La présence de matériaux plus hydrogénés que l'eau dans l'emballage n'est pas autorisée.

Activité maximale par emballage : L'activité maximale de ce contenu doit être inférieure à 1 A_2

État physique : Crayons combustibles constitués par des pastilles frittées placées dans une gaine en alliage de Zirconium respectant un des deux critères donnés au paragraphe 1.1 de la présente annexe.

Forme chimique : Pastilles en oxyde d'uranium (UO_2) et/ou pastilles combustibles composées d'un mélange d'UO_2 dont l'enrichissement en U235 ne dépasse pas 5% et d'un corps jouant le rôle de poison neutronique avec une densité du mélange n'excédant pas 10,69 g/cm³.

Forme spéciale : Les matières transportées ne sont pas sous forme spéciale.

2. AMÉNAGEMENTS INTERNES

L'aménagement interne est une boîte à crayons, décrite au chapitre 2.3 du dossier de sûreté.

2.1 Boîtes à crayons

Les crayons non assemblés sont regroupés dans des boîtes à crayons versions FCC3 qui viennent s'insérer en lieu et place des assemblages à l'intérieur des FCC3 version 1.

La boîte est constituée d'une tôle pliée en U, fermée aux extrémités et renforcée par deux longerons soudés en partie supérieure de la tôle. Elle constitue un logement de section carrée, de section utile 214 x 214 mm².

Un système de calage axial et radial permet de s'adapter à la longueur des crayons et de les maintenir en position. Un schéma de principe est donné à la figure 6.1. Une description détaillée accompagnée de plans est fournie en annexe 1 du dossier de sûreté (note FFDC01038).

2.2 Cales

Un jeu de 2 cales assure le maintien longitudinal de la boîte dans la cavité (une cale de tête et une cale de pieds). La description détaillée des cales est donnée en annexe 1 du dossier de sûreté, dans la note FFDC01038.

3. ETUDE DE CRITICITE

Elle fait l'objet de la note FFDC01046, donnée en annexe 12 du dossier de sûreté.
Les hypothèses prises en compte sont les suivantes :

- vidange différentielle ;
- pénétration d'eau dans tous les espaces vides.

Indice de Sûreté Criticité (CSI) :

- cas du transport des crayons UO_2 avec calage radial et axial :
  - indice de sûreté-criticité : 0 (Nombre N infini),
  - précautions particulières à prendre au cours du transport : Néant
- cas du transport des crayons UO_2-Gd_2O_3 avec ou sans calage radial ni axial :
  - indice de sûreté-criticité : 0 (Nombre N infini),
  - précautions particulières à prendre au cours du transport : Néant ;
- cas du transport des crayons UO_2 en faible nombre, sans calage radial ni axial :
  - indice de sûreté-criticité : 50 (Nombre N = 1),
  - précautions particulières à prendre au cours du transport : respecter une masse maximale d'UO_2 de 21,1 kg par colis.

Le système d'isolement considéré est constitué des éléments décrits en annexe 0 et, pour la partie contenu, des éléments suivants :

- les caractéristiques des crayons combustibles telles que décrites dans le tableau du paragraphe 1.1 de la présente annexe ;
- les tubes de gainage qui garantissent le confinement de la matière fissile en situation accidentelle.

FIGURE 6.1
SCHEMA DE LA BOÎTE A CRAYONS

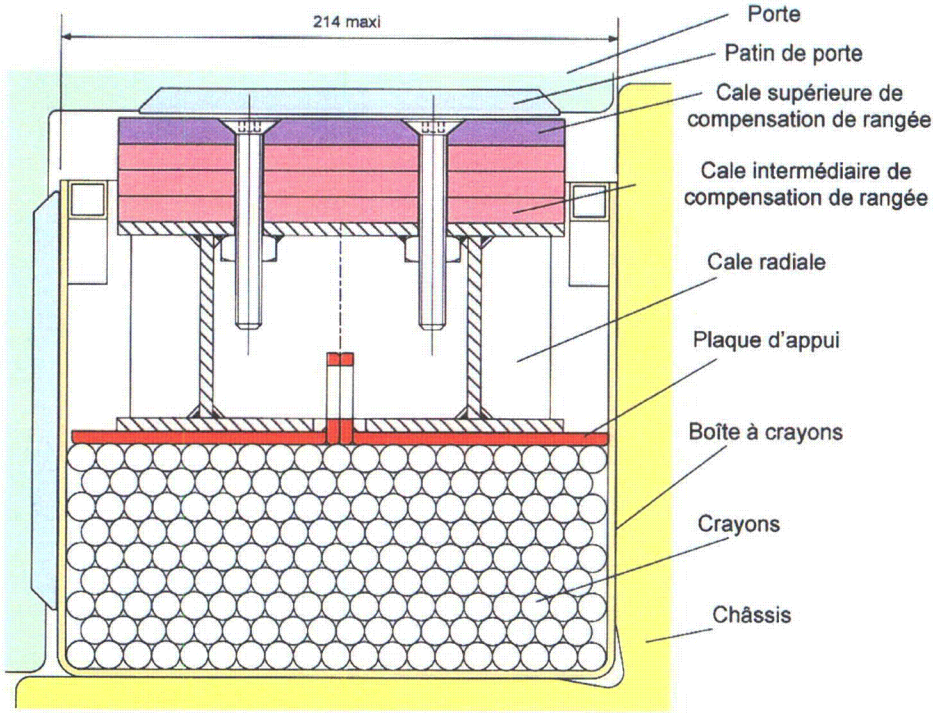

ANNEXE 7

CRAYONS COMBUSTIBLES REP NEUFS

Le dossier de sûreté justifiant ce contenu est TFX/DC/2159 rév. D.

Ce contenu doit être chargé dans un emballage FCC 3 version 1.

1. DEFINITION DU CONTENU RADIOACTIF AUTORISE

1.1 Caractéristiques des crayons combustibles

Le contenu radioactif autorisé, décrit au chapitre 2.3 du dossier de sûreté, est constitué de crayons combustibles neufs, à destination des réacteurs à eau pressurisée, tels que décrits ci-après :

Caractéristiques des crayons combustibles avant irradiation :	**14x14 8 pieds**
masse totale maximale par cavité (kg)	751
masse totale maximale des crayons par boîte (kg)	511
masse maximale de métal lourd par boîte (kg)	377(1)
longueur active nominale (mm)	2413
nombre maximal de crayons combustibles par boîte	241
Gaine : matériau	Alliage de Zirconium
– épaisseur minimale (mm)	0,57
– diamètre extérieur minimal (mm)	10,68
Pastilles :	UNE
– diamètre maximal (mm)	9,40
– densité maximale de l'oxyde (97,5 % de la densité théorique)	10,69
– enrichissement initial maximal ($^{235}U/U_{total}$) (%)	5
– rapport massique maximal $^{232}U/U_{total}$ (%)	5.10^{-8}
– rapport massique maximal $^{234}U/U_{total}$ (%)	0,055
– rapport massique maximal $^{236}U/U_{total}$ (%)	0,05
– teneur massique minimale en Gd_2O_3 des crayons gadoliniés (%)	2
Pression interne absolue maximale des crayons à 20 °C (bars)	32,7

(1) Cette masse maximale ne concerne que les contenus avec calage et les contenus gadoliniés.

Les propriétés de résistance mécanique des matériaux de gainage des crayons doivent respecter l'un des critères suivants:

	1	**2**	**3**	**4**	**5**
$R_{p0.2}$ (MPa) ≥	520	455	350	250	290
R_m (MPa) ≥	710	590	480	400	440
A_t (%)≥	12	12	15	25	20

1.2 Conditions de chargement

Tous les crayons d'un chargement doivent vérifier les conditions définies dans le tableau ci-dessous.

type de réseau	nombre maximal de crayons autorisé au chargement, par boîte	enrichissement initial maximal de chaque crayon du chargement ($^{235}U/U_{total}$)	nombre minimal de crayons du chargement (1)
14x14	241	5	Rangée complète de crayons combustibles ou inertes

(1) Les rangées incomplètes de crayons combustibles doivent être complétées par des barres en acier (ou Zy) contenant éventuellement un poison neutronique. On entend par l'appellation « nombre de crayons par boîte » le nombre total de crayons combustibles et de barres en acier (ou Zy).

La présence de matériaux plus hydrogénés que l'eau dans l'emballage n'est pas autorisée.

Activité maximale par emballage : L'activité maximale de ce contenu doit être inférieure à 1 A_2

État physique : Assemblages de crayons combustibles constitués par des pastilles frittées placées dans une gaine en alliage de Zirconium respectant un des deux critères donnés au paragraphe 1.1 de la présente annexe.

Forme chimique : Pastilles en oxyde d'uranium (UO_2) et/ou pastilles combustibles composées d'un mélange d'UO_2 dont l'enrichissement en U235 ne dépasse pas 5% et d'un corps jouant le rôle de poison neutronique avec une densité du mélange n'excédant pas 10,69 g/cm³.

Forme spéciale : Les matières transportées ne sont pas sous forme spéciale.

2. AMÉNAGEMENTS INTERNES

L'aménagement interne est une boîte à crayons, décrite au chapitre 2.3 du dossier de sûreté.

2.1 Boîtes à crayons

Les crayons non assemblés sont regroupés dans des boîtes à crayons versions FCC3 qui viennent s'insérer en lieu et place des assemblages à l'intérieur des FCC3 version 1.

La boîte est constituée d'une tôle pliée en U, fermée aux extrémités et renforcée par deux longerons soudés en partie supérieure de la tôle. Elle constitue un logement de section carrée, de section utile 214 x 214 mm².

Un système de calage axial et radial permet de s'adapter à la longueur des crayons et de les maintenir en position. Un schéma de principe est donné à la figure 7.1. Une description détaillée accompagnée de plans est fournie en annexe 1 du dossier de sûreté (FFDC01038).

2.2 Cales

Un jeu de 2 cales assure le maintien longitudinal de la boîte dans la cavité (une cale de tête et une cale de pieds). La description détaillée des cales est donnée en annexe 1 du dossier de sûreté, dans la note FFDC01038.

3. ETUDE DE CRITICITE

Elle fait l'objet de la note FFDC01046, donnée en annexe 12 du dossier de sûreté.

Les hypothèses prises en compte sont les suivantes :

- vidange différentielle ;

- pénétration d'eau dans tous les espaces vides.

Indice de Sûreté Criticité (CSI) :

- cas du transport des crayons UO_2 avec calage radial et axial :
  - indice de sûreté-criticité : 0 (Nombre N infini),
  - précautions particulières à prendre au cours du transport : Néant
- cas du transport des crayons UO_2-Gd_2O_3 avec ou sans calage radial ni axial :
  - indice de sûreté-criticité : 0 (Nombre N infini),
  - précautions particulières à prendre au cours du transport : Néant ;
- cas du transport des crayons UO_2 en faible nombre, sans calage radial ni axial :
  - indice de sûreté-criticité : 50 (Nombre N = 1),
  - précautions particulières à prendre au cours du transport : respecter une masse maximale d'UO_2 de 21,1 kg par colis.

Le système d'isolement considéré est constitué des éléments décrits en annexe 0 et, pour la partie contenu, des éléments suivants :

- les caractéristiques des crayons combustibles telles que décrites dans le tableau du paragraphe 1.1 de la présente annexe ;
- les tubes de gainage qui garantissent le confinement de la matière fissile en situation accidentelle.

FIGURE 7.1
SCHEMA DE LA BOÎTE A CRAYONS

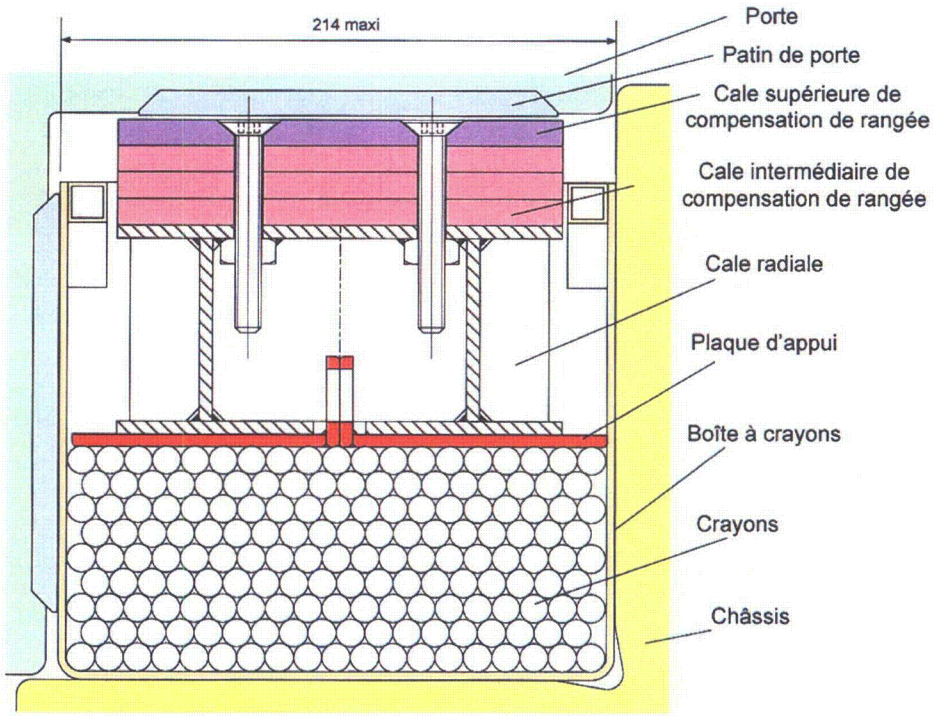

ANNEXE 8

CRAYONS COMBUSTIBLES REP NEUFS

Le dossier de sûreté justifiant ce contenu est TFX/DC/2159 rév. D.

Ce contenu doit être chargé dans un emballage FCC 3 version 1.

1. DEFINITION DU CONTENU RADIOACTIF AUTORISE

1.1 Caractéristiques des crayons combustibles

Le contenu radioactif autorisé, décrit au chapitre 2.3 du dossier de sûreté, est constitué de crayons combustibles neufs, à destination des réacteurs à eau pressurisée, tels que décrits ci-après :

Caractéristiques des crayons combustibles avant irradiation :	**14x14 10 pieds**
masse totale maximale par cavité (kg)	751
masse totale maximale des crayons par boîte (kg)	639
masse maximale de métal lourd par boîte (kg)	476(1)
longueur active nominale (mm)	3048
nombre maximal de crayons combustibles par boîte	241
Gaine : matériau	Alliage de Zirconium
– épaisseur minimale (mm)	0,57
– diamètre extérieur minimal (mm)	10,68
Pastilles :	UNE
– diamètre maximal (mm)	9,40
– densité maximale de l'oxyde (97,5 % de la densité théorique)	10,69
– enrichissement initial maximal ($^{235}U/U_{total}$) (%)	5
– rapport massique maximal $^{232}U/U_{total}$ (%)	5.10^{-8}
– rapport massique maximal $^{234}U/U_{total}$ (%)	0,055
– rapport massique maximal $^{236}U/U_{total}$ (%)	0,05
– teneur massique minimale en Gd_2O_3 des crayons gadoliniés (%)	2
Pression interne absolue maximale des crayons à 20 °C (bars)	32,7

(1) Cette masse maximale ne concerne que les contenus avec calage et les contenus gadoliniés.

Les propriétés de résistance mécanique des matériaux de gainage des crayons doivent respecter l'un des critères suivants:

	1	**2**	**3**	**4**	**5**
$R_{p0.2}$ (MPa) ≥	520	455	350	250	290
R_m (MPa) ≥	710	590	480	400	440
A_t (%)≥	12	12	15	25	20

1.2 Conditions de chargement

Tous les crayons d'un chargement doivent vérifier les conditions définies dans le tableau ci-dessous.

type de réseau	nombre maximal de crayons autorisé au chargement, par boîte	enrichissement initial maximal de chaque crayon du chargement ($^{235}U/U_{total}$)	nombre minimal de crayons du chargement (2)
14x14	241	5	Rangée complète de crayons combustibles ou inertes

(1) Les rangées incomplètes de crayons combustibles doivent être complétées par des barres en acier (ou Zy) contenant éventuellement un poison neutronique. On entend par l'appellation « nombre de crayons par boîte » le nombre total de crayons combustibles et de barres en acier (ou Zy).

La présence de matériaux plus hydrogénés que l'eau dans l'emballage n'est pas autorisée.

Activité maximale par emballage : L'activité maximale de ce contenu doit être inférieure à 1 A_2

État physique : Crayons combustibles constitués par des pastilles frittées placées dans une gaine en alliage de Zirconium respectant un des deux critères donnés au paragraphe 1.1 de la présente annexe.

Forme chimique : Pastilles en oxyde d'uranium (UO_2) et/ou pastilles combustibles composées d'un mélange d'UO_2 dont l'enrichissement en U235 ne dépasse pas 5% et d'un corps jouant le rôle de poison neutronique avec une densité du mélange n'excédant pas 10,69 g/cm³.

Forme spéciale : Les matières transportées ne sont pas sous forme spéciale.

2. AMÉNAGEMENTS INTERNES

L'aménagement interne est une boîte à crayons, décrite au chapitre 2.3 du dossier de sûreté.

2.1 Boîtes à crayons

Les crayons non assemblés sont regroupés dans des boîtes à crayons versions FCC3 qui viennent s'insérer en lieu et place des assemblages à l'intérieur des FCC3 version 1.

La boîte est constituée d'une tôle pliée en U, fermée aux extrémités et renforcée par deux longerons soudés en partie supérieure de la tôle. Elle constitue un logement de section carrée, de section utile 214 x 214 mm².

Un système de calage axial et radial permet de s'adapter à la longueur des crayons et de les maintenir en position. Un schéma de principe est donné à la figure 8.1. Une description détaillée accompagnée de plans est fournie en annexe 1 du dossier de sûreté (FFDC01038).

2.2 Cales

Un jeu de 2 cales assure le maintien longitudinal de la boîte dans la cavité (une cale de tête et une cale de pieds). La description détaillée des cales est donnée en annexe 1 du dossier de sûreté, dans la note FFDC01038.

3. ETUDE DE CRITICITE

Elle fait l'objet de la note FFDC01046, donnée en annexe 12 du dossier de sûreté.
Les hypothèses prises en compte sont les suivantes :

- vidange différentielle ;
- pénétration d'eau dans tous les espaces vides.

Indice de Sûreté Criticité (CSI) :

- cas du transport des crayons UO_2 avec calage radial et axial :
  - indice de sûreté-criticité : 0 (Nombre N infini),
  - précautions particulières à prendre au cours du transport : Néant
- cas du transport des crayons UO_2-Gd_2O_3 avec ou sans calage radial ni axial :
  - indice de sûreté-criticité : 0 (Nombre N infini),
  - précautions particulières à prendre au cours du transport : Néant ;
- cas du transport des crayons UO_2 en faible nombre, sans calage radial ni axial :
  - indice de sûreté-criticité : 50 (Nombre N = 1),
  - précautions particulières à prendre au cours du transport : respecter une masse maximale d'UO_2 de 21,1 kg par colis.

Le système d'isolement considéré est constitué des éléments décrits en annexe 0 et, pour la partie contenu, des éléments suivants :

- les caractéristiques des crayons combustibles telles que décrites dans le tableau du paragraphe 1.1 de la présente annexe ;
- les tubes de gainage qui garantissent le confinement de la matière fissile en situation accidentelle.

FIGURE 8.1
SCHEMA DE LA BOÎTE A CRAYONS

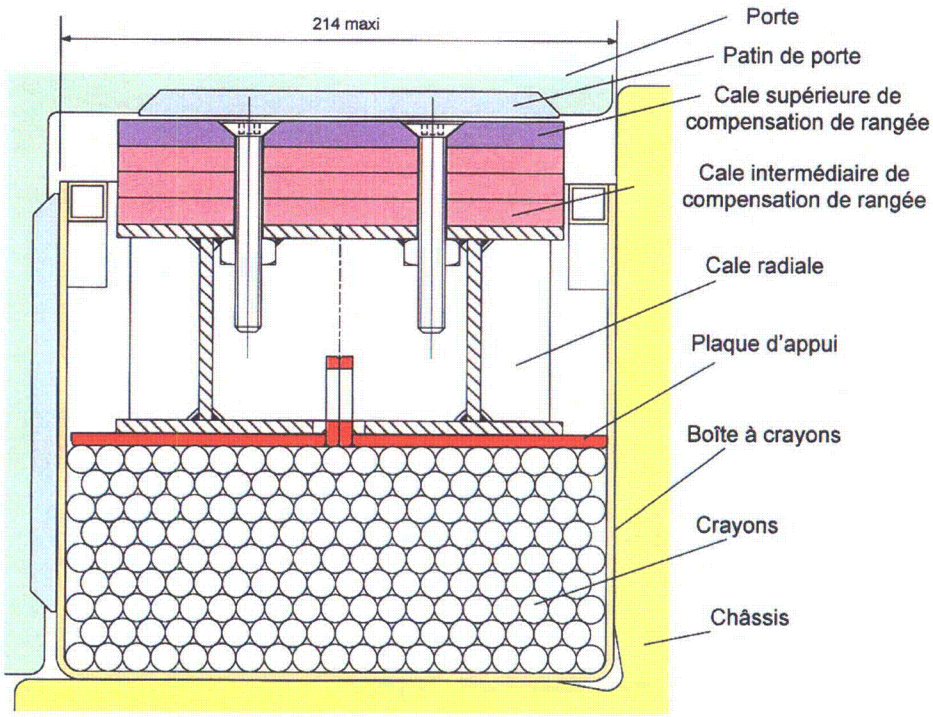

ANNEXE 9

ASSEMBLAGES COMBUSTIBLES REP NEUFS

Le dossier de sûreté justifiant ce contenu est TFX/DC/2159 rév. D.

Ce contenu doit être chargé dans un emballage FCC 3 version 1.

1. DEFINITION DU CONTENU RADIOACTIF AUTORISE

1.1 Caractéristiques des assemblages combustibles

Le contenu radioactif autorisé, décrit au chapitre 2.2 du dossier de sûreté, est constitué d'au maximum deux assemblages combustibles neufs, à destination des réacteurs à eau pressurisée, tels que décrits ci-après :

Caractéristiques des assemblages avant irradiation :	**17x17 12 pieds**
type de réseau	17x17
pas nominal du réseau (mm)	12,6
masse totale maximale de l'assemblage avec ou sans grappe (kg)	751
masse maximale de métal lourd par assemblage (kg)	521
longueur active nominale (mm)	3658
nombre maximal de crayons combustibles	288(1)
Caractéristiques des crayons combustibles avant irradiation :	
Gaine : matériau	Alliage de Zirconium
– épaisseur minimale (mm)	0,52
– diamètre extérieur minimal (mm)	9,40
Pastilles :	UNE
– diamètre maximal (mm)	8,30
– densité maximale de l'oxyde (97,5 % de la densité théorique)	10,69
– enrichissement initial maximal $^{235}U/U_{total}$ (%)	4,9
– rapport massique maximal $^{232}U/U_{total}$ (%)	5.10^{-8}
– rapport massique maximal $^{234}U/U_{total}$ (%)	0,055
– rapport massique maximal $^{236}U/U_{total}$ (%)	0,05
Pression interne absolue maximale des crayons à 20 °C (bars)	32,7

(2) Ce nombre de crayons correspond au nombre maximum de crayons susceptibles d'être insérés dans une structure (squelette d'assemblage ou carquois), y compris dans les tubes guides.

Les propriétés de résistance mécanique des matériaux de gainage des crayons doivent respecter l'un des critères suivants:

	1	2	3	4	5
$R_{p0.2}$ (MPa) ≥	520	455	350	250	290
R_m (MPa) ≥	710	590	480	400	440
A_t (%)≥	12	12	15	25	20

1.2 Conditions de chargement

Tous les assemblages d'un chargement doivent vérifier les conditions définies dans le tableau ci-dessous :

type d'assemblage	nombre maximal d'assemblages autorisé au chargement	enrichissement initial maximal par crayon de chaque assemblage du chargement $^{235}U/U_{total}$ (%)	nombre minimal de crayons de chaque assemblage du chargement (1)
17x17	2	4,9	264

(2) Les assemblages incomplets peuvent être équipés de barres pleines en acier (ou Zy) contenant éventuellement un poison neutronique. On entend par l'appellation « nombre de crayons par assemblage » le nombre total de crayons combustibles et de barres en acier (ou Zy).

Tous les assemblages du chargement, sauf un, peuvent être remplacés par des squelettes d'assemblages.

La présence de matériaux plus hydrogénés que l'eau dans l'emballage n'est pas autorisée.

Activité maximale par emballage : L'activité maximale de ce contenu doit être inférieure à 1 A_2

État physique : Assemblages de crayons combustibles constitués par des pastilles frittées placées dans une gaine en alliage de Zirconium respectant un des deux critères donnés au paragraphe 1.1 de la présente annexe.

Forme chimique : Pastilles en oxyde d'uranium (UO_2) et/ou pastilles combustibles composées d'un mélange d'UO_2 dont l'enrichissement en U235 ne dépasse pas 4,9 % et d'un corps jouant le rôle de poison neutronique avec une densité du mélange n'excédant pas 10,69 g/cm³.

Forme spéciale : Les matières transportées ne sont pas sous forme spéciale.

2. ETUDE DE CRITICITE

Elle fait l'objet de la note FFDC00817, donnée en annexe 12 du dossier de sûreté et de la note FFDC03125

Les hypothèses prises en compte sont les suivantes :

- non respect de l'intégrité géométrique des assemblages en CAT ;
- vidange différentielle ;
- pénétration d'eau dans tous les espaces vides.

Indice de Sûreté Criticité (CSI) : 0,63 (Nombre N=80)

Précautions particulières à prendre au moment du chargement au réacteur : Néant

Précautions particulières à prendre au cours du transport : Néant

Le système d'isolement considéré est constitué des éléments décrits en annexe 0 et, pour la partie contenu, des éléments suivants :

- les caractéristiques des assemblages combustibles telles que décrites dans le tableau du paragraphe 1.1 de la présente annexe ;
- les tubes de gainage qui garantissent le confinement de la matière fissile en situation accidentelle ;
- la structure de l'assemblage (grilles, embouts) ;
- le caractère complet des assemblages : les éventuels crayons fissiles manquants sont remplacés par des crayons inertes.

ANNEXE 10

ASSEMBLAGES COMBUSTIBLES REP NEUFS

Le dossier de sûreté justifiant ce contenu est TFX/DC/2159 rév. D.

Ce contenu doit être chargé dans un emballage FCC 3 version 1.

1. DEFINITION DU CONTENU RADIOACTIF AUTORISE

1.1 Caractéristiques des assemblages combustibles

Le contenu radioactif autorisé, décrit au chapitre 2.2 du dossier de sûreté, est constitué d'au maximum deux assemblages combustibles neufs, à destination des réacteurs à eau pressurisée, tels que décrits ci-après :

Caractéristiques des assemblages avant irradiation :	**15x15**
type de réseau	15x15
pas nominal du réseau (mm)	14,3
masse totale maximale de l'assemblage avec ou sans grappe (kg)	739
masse maximale de métal lourd par assemblage (kg)	519
longueur active nominale (mm)	3658
nombre maximal de crayons combustibles	224(1)
Caractéristiques des crayons combustibles avant irradiation :	
Gaine : matériau	Alliage de Zirconium
– épaisseur minimale (mm)	0,57
– diamètre extérieur minimal (mm)	10,68
Pastilles :	UNE
– diamètre maximal (mm)	9,40
– densité maximale de l'oxyde (97,5 % de la densité théorique)	10,69
– enrichissement initial maximal $^{235}U/U_{total}$ (%)	4,8
– rapport massique maximal $^{232}U/U_{total}$ (%)	5.10^{-8}
– rapport massique maximal $^{234}U/U_{total}$ (%)	0,055
– rapport massique maximal $^{236}U/U_{total}$ (%)	0,05
Pression interne absolue maximale des crayons à 20 °C (bars)	32,7

(2) Ce nombre de crayons correspond au nombre maximum de crayons susceptibles d'être insérés dans une structure (squelette d'assemblage ou carquois), y compris dans les tubes guides.

Les propriétés de résistance mécanique des matériaux de gainage des crayons doivent respecter l'un des critères suivants:

	1	2	3	4	5
$R_{p0.2}$ (MPa) ≥	520	455	350	250	290
R_m (MPa) ≥	710	590	480	400	440
A_t (%)≥	12	12	15	25	20

1.2 Conditions de chargement

Tous les assemblages d'un chargement doivent vérifier les conditions définies dans le tableau ci-dessous :

type d'assemblage	nombre maximal d'assemblages autorisé au chargement	enrichissement initial maximal par crayon de chaque assemblage du chargement $^{235}U/U_{total}$ (%)	nombre minimal de crayons de chaque assemblage du chargement (1)
15x15	2	4,8	204

(2) Les assemblages incomplets peuvent être équipés de barres pleines en acier (ou Zy) contenant éventuellement un poison neutronique. On entend par l'appellation « nombre de crayons par assemblage » le nombre total de crayons combustibles et de barres en acier (ou Zy).

Tous les assemblages du chargement, sauf un, peuvent être remplacés par des squelettes d'assemblages.

La présence de matériaux plus hydrogénés que l'eau dans l'emballage n'est pas autorisée.

Activité maximale par emballage : L'activité maximale de ce contenu doit être inférieure à 1 A_2

État physique : Assemblages de crayons combustibles constitués par des pastilles frittées placées dans une gaine en alliage de Zirconium respectant un des deux critères donnés au paragraphe 1.1 de la présente annexe.

Forme chimique : Pastilles en oxyde d'uranium (UO_2) et/ou pastilles combustibles composées d'un mélange d'UO_2 dont l'enrichissement en U235 ne dépasse pas 4,8 % et d'un corps jouant le rôle de poison neutronique avec une densité du mélange n'excédant pas 10,69 g/cm³.

Forme spéciale : Les matières transportées ne sont pas sous forme spéciale.

2. ETUDE DE CRITICITE

Elle fait l'objet de la note FFDC00817, donnée en annexe 12 du dossier de sûreté et de la note FFDC03077

Les hypothèses prises en compte sont les suivantes :

- non respect de l'intégrité géométrique des assemblages en CAT ;
- vidange différentielle ;
- Pénétration d'eau dans tous les espaces vides.

Indice de Sûreté Criticité (CSI) : 0,63 (Nombre N=80)

Précautions particulières à prendre au moment du chargement au réacteur : Néant

Précautions particulières à prendre au cours du transport : Néant

Le système d'isolement considéré est constitué des éléments décrits en annexe 0 et, pour la partie contenu, des éléments suivants :

- les caractéristiques des assemblages combustibles telles que décrites dans le tableau du paragraphe 1.1 de la présente annexe ;
- les tubes de gainage qui garantissent le confinement de la matière fissile en situation accidentelle ;
- la structure de l'assemblage (grilles, embouts) ;
- le caractère complet des assemblages : les éventuels crayons fissiles manquants sont remplacés par des crayons inertes.

ANNEXE 11

CRAYONS COMBUSTIBLES REP NEUFS

Le dossier de sûreté justifiant ce contenu est TFX/DC/2159 rév. D.

Ce contenu doit être chargé dans un emballage FCC 3 version 1.

1. DEFINITION DU CONTENU RADIOACTIF AUTORISE

1.1 Caractéristiques des crayons combustibles

Le contenu radioactif autorisé, décrit au chapitre 2.3 du dossier de sûreté, est constitué de crayons combustibles neufs, à destination des réacteurs à eau pressurisée, tels que décrits ci-après :

Caractéristiques des crayons combustibles avant irradiation :	**17x17 12 pieds**
masse totale maximale par cavité (kg)	751
masse totale maximale des crayons par boîte (kg)	665
masse maximale de métal lourd par boîte (kg)	483(1)
longueur active nominale (mm)	3658
nombre maximal de crayons combustibles par boîte	267
Gaine : matériau	Alliage de Zirconium
– épaisseur minimale (mm)	0,52
– diamètre extérieur minimal (mm)	9,40
Pastilles :	UNE
– diamètre maximal (mm)	8,30
– densité maximale de l'oxyde (97,5 % de la densité théorique)	10,69
– enrichissement initial maximal ($^{235}U/U_{total}$) (%)	4,9
– rapport massique maximal $^{232}U/U_{total}$ (%)	5.10^{-8}
– rapport massique maximal $^{234}U/U_{total}$ (%)	0,055
– rapport massique maximal $^{236}U/U_{total}$ (%)	0,05
– teneur massique minimale en Gd_2O_3 des crayons gadoliniés (%)	2
Pression interne absolue maximale des crayons à 20 °C (bars)	32,7

(2) Cette masse maximale ne concerne que les contenus avec calage et les contenus gadoliniés.

Les propriétés de résistance mécanique des matériaux de gainage des crayons doivent respecter l'un des critères suivants:

	1	**2**	**3**	**4**	**5**
$R_{p0.2}$ (MPa) ≥	520	455	350	250	290
R_m (MPa) ≥	710	590	480	400	440
A_t (%)≥	12	12	15	25	20

1.2 Conditions de chargement

Tous les crayons d'un chargement doivent vérifier les conditions définies dans le tableau ci-dessous.

type de réseau	nombre maximal de crayons autorisé au chargement, par boîte	enrichissement initial maximal de chaque crayon du chargement ($^{235}U/U_{total}$)	nombre minimal de crayons du chargement (1)
17x17	267	4,9	Rangée complète de crayons combustibles ou inertes

(2) Les rangées incomplètes de crayons combustibles doivent être complétées par des barres en acier (ou Zy) contenant éventuellement un poison neutronique. On entend par l'appellation « nombre de crayons par boîte » le nombre total de crayons combustibles et de barres en acier (ou Zy).

La présence de matériaux plus hydrogénés que l'eau dans l'emballage n'est pas autorisée.

Activité maximale par emballage : L'activité maximale de ce contenu doit être inférieure à 1 A_2

État physique : Crayons combustibles constitués par des pastilles frittées placées dans une gaine en alliage de Zirconium respectant un des deux critères donnés au paragraphe 1.1 de la présente annexe.

Forme chimique : Pastilles en oxyde d'uranium (UO_2) et/ou pastilles combustibles composées d'un mélange d'UO_2 dont l'enrichissement en U235 ne dépasse pas 4,9 % et d'un corps jouant le rôle de poison neutronique avec une densité du mélange n'excédant pas 10,69 g/cm³.

Forme spéciale : Les matières transportées ne sont pas sous forme spéciale.

2. AMÉNAGEMENTS INTERNES

L'aménagement interne est une boîte à crayons, décrite au chapitre 2.3 du dossier de sûreté.

2.1 Boîtes à crayons

Les crayons non assemblés sont regroupés dans des boîtes à crayons versions FCC3 qui viennent s'insérer en lieu et place des assemblages à l'intérieur des FCC3 version 1.

La boîte est constituée d'une tôle pliée en U, fermée aux extrémités et renforcée par deux longerons soudés en partie supérieure de la tôle. Elle constitue un logement de section carrée, de section utile 214 x 214 mm².

Un système de calage axial et radial permet de s'adapter à la longueur des crayons et de les maintenir en position. Un schéma de principe est donné à la figure 5.1. Une description détaillée accompagnée de plans est fournie en annexe 1 du dossier de sûreté (note FFDC01038).

2.2 Cales

Un jeu de 2 cales assure le maintien longitudinal de la boîte dans la cavité (une cale de tête et une cale de pieds). La description détaillée des cales est donnée en annexe 1 du dossier de sûreté, dans la note FFDC01038.

3. ETUDE DE CRITICITE

Elle fait l'objet de la note FFDC01046, donnée en annexe 12 du dossier de sûreté et de la note FFDC03125.
Les hypothèses prises en compte sont les suivantes :

- vidange différentielle ;
- pénétration d'eau dans tous les espaces vides.

Indice de Sûreté Criticité (CSI) :

- cas du transport des crayons UO_2 avec calage radial et axial :
  indice de sûreté-criticité : 0 (Nombre N infini),
  précautions particulières à prendre au cours du transport : Néant
- cas du transport des crayons UO_2-Gd_2O_3 avec ou sans calage radial ni axial :
  indice de sûreté-criticité : 0 (Nombre N infini),
  précautions particulières à prendre au cours du transport : Néant ;
- cas du transport des crayons UO_2 en faible nombre, sans calage radial ni axial :
  indice de sûreté-criticité : 50 (Nombre N = 1),
  précautions particulières à prendre au cours du transport : respecter une masse maximale d'UO_2 de 20 kg par colis.

Le système d'isolement considéré est constitué des éléments décrits en annexe 0 et, pour la partie contenu, des éléments suivants :

- les caractéristiques des crayons combustibles telles que décrites dans le tableau du paragraphe 1.1 de la présente annexe ;
- les tubes de gainage qui garantissent le confinement de la matière fissile en situation accidentelle.

FIGURE 11.1
SCHEMA DE LA BOÎTE A CRAYONS

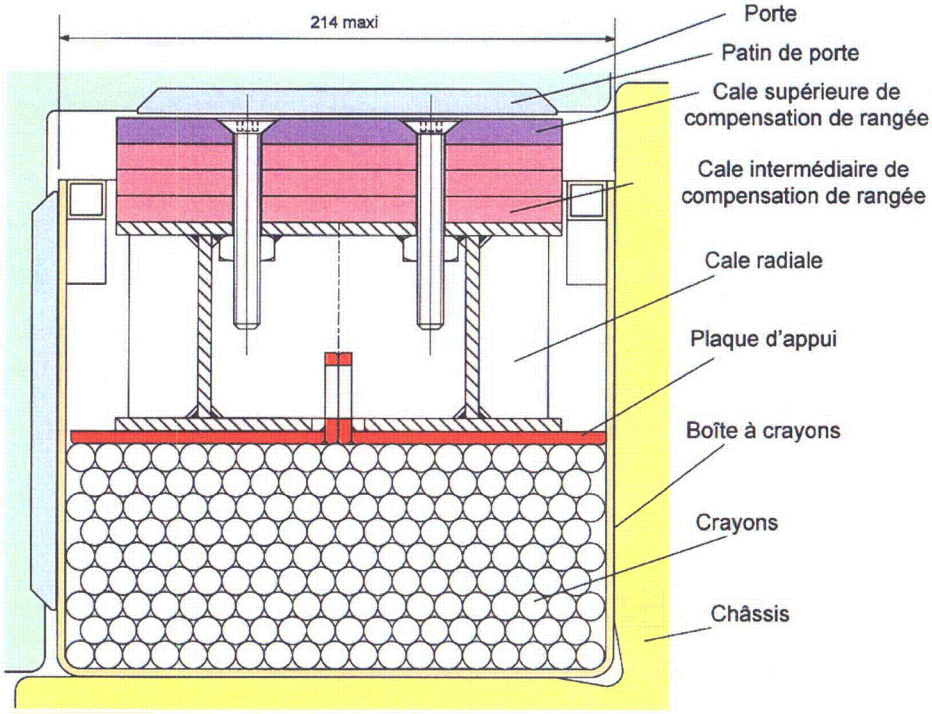

ANNEXE 12

CRAYONS COMBUSTIBLES REP NEUFS

Le dossier de sûreté justifiant ce contenu est TFX/DC/2159 rév. D.

Ce contenu doit être chargé dans un emballage FCC 3 version 1.

1. DEFINITION DU CONTENU RADIOACTIF AUTORISE

1.1 Caractéristiques des crayons combustibles

Le contenu radioactif autorisé, décrit au chapitre 2.3 du dossier de sûreté, est constitué de crayons combustibles neufs, à destination des réacteurs à eau pressurisée, tels que décrits ci-après :

Caractéristiques des crayons combustibles avant irradiation :	**15x15**
masse totale maximale par cavité (kg)	751
masse totale maximale des crayons par boîte(kg)	765
masse maximale de métal lourd par boîte (kg)	560(1)
longueur active nominale (mm)	3658
nombre maximal de crayons combustibles par boîte	241
Gaine : matériau	Alliage de Zirconium
– épaisseur minimale (mm)	0,57
– diamètre extérieur minimal (mm)	10,68
Pastilles :	UNE
– diamètre maximal (mm)	9,40
– densité maximale de l'oxyde (97,5 % de la densité théorique)	10,69
– enrichissement initial maximal ($^{235}U/U_{total}$) (%)	4,8
– rapport massique maximal $^{232}U/U_{total}$ (%)	5.10^{-8}
– rapport massique maximal $^{234}U/U_{total}$ (%)	0,055
– rapport massique maximal $^{236}U/U_{total}$ (%)	0,05
– teneur massique minimale en Gd_2O_3 des crayons gadoliniés (%)	2
Pression interne absolue maximale des crayons à 20 °C (bars)	32,7

(2) Cette masse maximale ne concerne que les contenus avec calage et les contenus gadoliniés.

Les propriétés de résistance mécanique des matériaux de gainage des crayons doivent respecter l'un des critères suivants:

	1	**2**	**3**	**4**	**5**
$R_{p0.2}$ (MPa) ≥	520	455	350	250	290
R_m (MPa) ≥	710	590	480	400	440
A_t (%)≥	12	12	15	25	20

1.2 Conditions de chargement

Tous les crayons d'un chargement doivent vérifier les conditions définies dans le tableau ci-dessous.

type de réseau	nombre maximal de crayons autorisé au chargement, par boîte	enrichissement initial maximal de chaque crayon du chargement ($^{235}U/U_{total}$)	nombre minimal de crayons du chargement (1)
15x15	241	4,8	Rangée complète de crayons combustibles ou inertes

(2) Les rangées incomplètes de crayons combustibles doivent être complétées par des barres en acier (ou Zy) contenant éventuellement un poison neutronique. On entend par l'appellation « nombre de crayons par boîte » le nombre total de crayons combustibles et de barres en acier (ou Zy).

La présence de matériaux plus hydrogénés que l'eau dans l'emballage n'est pas autorisée.

Activité maximale par emballage : L'activité maximale de ce contenu doit être inférieure à 1 A_2

État physique : Crayons combustibles constitués par des pastilles frittées placées dans une gaine en alliage de Zirconium respectant un des deux critères donnés au paragraphe 1.1 de la présente annexe.

Forme chimique : Pastilles en oxyde d'uranium (UO_2) et/ou pastilles combustibles composées d'un mélange d'UO_2 dont l'enrichissement en U235 ne dépasse pas 4,8 % et d'un corps jouant le rôle de poison neutronique avec une densité du mélange n'excédant pas 10,69 g/cm³.

Forme spéciale : Les matières transportées ne sont pas sous forme spéciale.

2. AMÉNAGEMENTS INTERNES

L'aménagement interne est une boîte à crayons, décrite au chapitre 2.3 du dossier de sûreté.

2.1 Boîtes à crayons

Les crayons non assemblés sont regroupés dans des boîtes à crayons versions FCC3 qui viennent s'insérer en lieu et place des assemblages à l'intérieur des FCC3 version 1.

La boîte est constituée d'une tôle pliée en U, fermée aux extrémités et renforcée par deux longerons soudés en partie supérieure de la tôle. Elle constitue un logement de section carrée, de section utile 214 x 214 mm².

Un système de calage axial et radial permet de s'adapter à la longueur des crayons et de les maintenir en position. Un schéma de principe est donné à la figure 6.1. Une description détaillée accompagnée de plans est fournie en annexe 1 du dossier de sûreté (note FFDC01038).

2.2 Cales

Un jeu de 2 cales assure le maintien longitudinal de la boîte dans la cavité (une cale de tête et une cale de pieds). La description détaillée des cales est donnée en annexe 1 du dossier de sûreté, dans la note FFDC01038.

3. ETUDE DE CRITICITE

Elle fait l'objet de la note FFDC01046, donnée en annexe 12 du dossier de sûreté et de la note FFDC03077.
Les hypothèses prises en compte sont les suivantes :

- vidange différentielle ;
- pénétration d'eau dans tous les espaces vides.

Indice de Sûreté Criticité (CSI) :

- cas du transport des crayons UO_2 avec calage radial et axial :
  indice de sûreté-criticité : 0 (Nombre N infini),
  précautions particulières à prendre au cours du transport : Néant
- cas du transport des crayons UO_2-Gd_2O_3 avec ou sans calage radial ni axial :
  indice de sûreté-criticité : 0 (Nombre N infini),
  précautions particulières à prendre au cours du transport : Néant ;
- cas du transport des crayons UO_2 en faible nombre, sans calage radial ni axial :
  indice de sûreté-criticité : 50 (Nombre N = 1),
  précautions particulières à prendre au cours du transport : respecter une masse maximale d'UO_2 de 21,1 kg par colis.

Le système d'isolement considéré est constitué des éléments décrits en annexe 0 et, pour la partie contenu, des éléments suivants :

- les caractéristiques des crayons combustibles telles que décrites dans le tableau du paragraphe 1.1 de la présente annexe ;
- les tubes de gainage qui garantissent le confinement de la matière fissile en situation accidentelle.

FIGURE 12.1
SCHEMA DE LA BOÎTE A CRAYONS

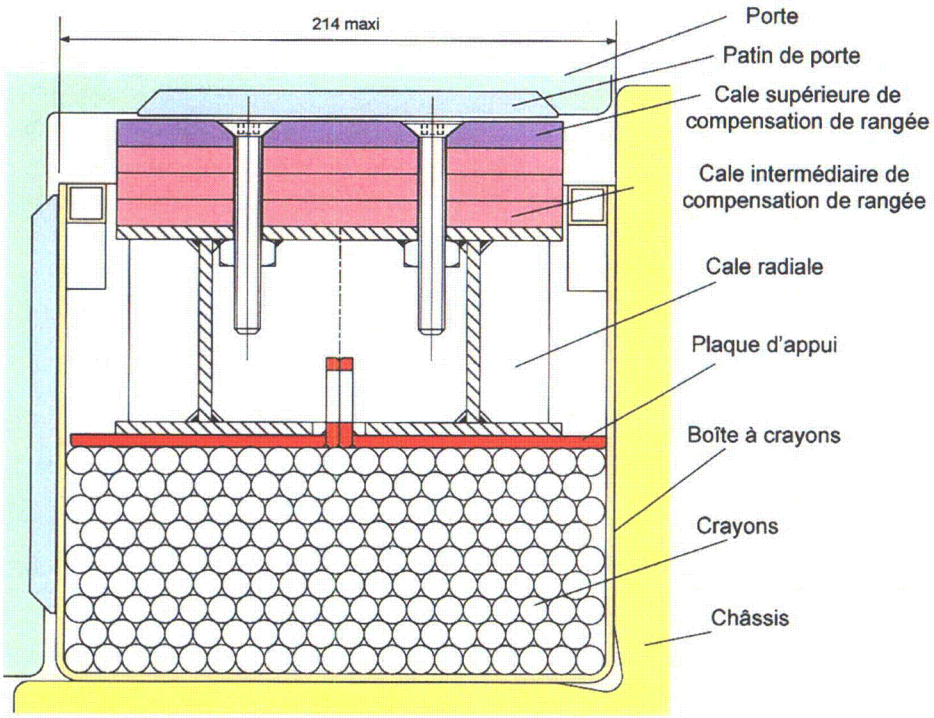

APPENDIX 0

FCC3 PACKAGE

1. DESCRIPTION OF THE PACKAGING

The packaging is designed, inspected, maintained, tested and used in accordance with safety file TFX/DC/2159 rev D.

The packaging, in cylindrical shape, is shown in figure 0.1.

The concept drawing is 229K0100 or 229K0200 for version 1 and 229K0300 for version 2.

The overall nominal outside dimensions are:
- length: 4923 + - 8 mm
- outside diameter: 1048 +/- 4 mm.

The maximum permissible mass of the loaded container during transportation is 4385 kg.

The container consists of the following main sub-assemblies.

1.1 Body

The FCC3 packaging is composed of a cylindrical horizontally aligned enclosure made up of two linked half-shells comprising:
- a steel cradle made up of two stringers and suspended, by means of shock mountings, from the lower shell;
- an internal device resting on the cradle and designed to accommodate one of the contents.

This internal device is made up of:
- a support frame whose rigid reverse "T"-shaped structure is intended to accommodate the consignment. The fabricated portion of the frame contains neutron-absorbing resin. On the bottom plate, a swing bolt authorises the vertical positioning of the support frame for loading or unloading the assemblies;
- two "L"-shaped doors containing neutron-absorbing resin are fixed to the support frame and seal off the contents;
- a bottom plate supporting the fuel assemblies at the time of the loadings and unloading with the support frame in vertical position;
- a top plate in two parts for sealing off the cavities and wedging the fuel assemblies at the other end.

1.2 Closing system

The two half-shells are linked by flanges; a special angle bar on the lower shell enables the fitting of 30 bolts which link up the two cylinders.
The doors and top plates are joined to the frame by ball pins. The bottom plate is screwed to the frame.

1.3 Damping system

Two axial shock absorbers are fixed to the end of the upper shell. They are made up of two metal boxes containing a balsa wood block.

1.4 Handling and lashing features

Handling can be performed in normal safety conditions by standard lifting machinery, with the aid of slings and levers or hooks. Three lifting modes are possible:

- by the 4 lifting lugs, welded to the top shell, for handling the empty or loaded package and the lid on its own during the opening operations; these lifting boxes are made up of a bent plate with a port for passing a hook through;
- by sockets for fork lift trucks, under the lower shell.

The packaging is designed to be suitably lashed during transportation by means of lifting lugs.

1.5 Safety functions

The confinement system is made up of the features described in the appendices and, for the container portion, of the container structure featuring the following items:

- the internal device: it is formed of the frame, the doors and end plates, together with the radial and axial wedging system for the rod boxes, together forming two neutronic cavities
- the neutron-poisoning resin contained in the doors and frame
- the lower and upper shells which protect the internals in NTC and ATC.

- the shock protection provided by the two half-shells and by the internal device

- the fire protection afforded by the two half-shells, the internals and the resin in the doors and frame.

2. MEASURES WHICH THE SHIPPER MUST TAKE BEFORE DISPATCHING THE PACKAGE

The container must be used by following the procedures in accordance with the instructions in chapters 4 and 8 of the safety file.

Before each shipment, the shipper must ensure that the following checks have been made, according to a list drawn up on the basis of the service conditions described in chapter 4.2 of the safety file, that the results of these checks meet the specified criteria and that the list has been regularly signed:

- check that the package has been maintained as per section 3;
- check the compliance of the content with this certificate;
- check the compatibility of the contents with the packaging version;
- check the torques of the bolts joining together the two half-shells: 5 +/- 1 mdaN;
- check the presence of all the pins needed to tightly close the container;
- check the contamination of the outer surfaces of the package;
- check the maximum radiation intensity around the package, in contact and at 1 m;
- check the tamper-proof seals are in place preventing access to the ports;

- check the presence of the labels and markings (the package identification is " « F/347/AF-96 » and the packaging identification is « TYPE A »);
- check that the transportation is for exclusive use;
- check in case of river transport that the total number of A2, of the contents in the packages arranged in the same hold or another compartment is less than 100;
- the package must be lashed in horizontal position on its means of transport

3. MAINTENANCE PROGRAMME

Maintenance is described in chapter 8 of the safety file.

In particular, no less than every 50 cycles or every 5 years, whichever is most limiting:

- the good overall condition of the packaging will be checked and any non-compliant component will be replaced,
- liquid penetrant examination of the gripping zones for lifting will be performed.

Any packaging not meeting the criteria specified in the maintenance programme must be taken out of service until the appropriate corrective action has been taken.

4. NOTIFICATION AND RECORDING OF SERIAL NUMBERS

Any taking out of use or change of owner of a packaging shall be made known to the competent authorities. To this effect, the owner relinquishing a packaging shall transmit the name of its purchaser.

5. QUALITY ASSURANCE

The QA principles to be applied during the design, fabrication, inspection, testing, maintenance and use of the packaging shall conform to those described in chapter 7 of the safety file.

DRAWING WITHELD UNDER 10 CFR 2.390

APPENDIX 1

FRESH PWR FUEL ASSEMBLIES

The safety file justifying this content is TFX/DC/2159 rev. D.

This content must be loaded into an FCC 3 version 1 container

1. DEFINITION OF THE AUTHORIZED RADIOACTIVE CONTENT

1.1 Fuel assembly characteristics

The authorized radioactive content, as described in chapter 2.2 of the safety file, is made up of no more than two fresh fuel assemblies, destined for PWR, as described below:

Fuel assembly characteristics before irradiation:	**17x17 12 ft**
type of array	17x17
Nominal pitch of array (mm)	12,6
Max totale mass of the assembly with or without control component (kg)	751
Max mass of heavy metal per assembly (kg)	521
Nominal active length (mm)	3658
Max number of fuel rods	288(1)
Fuel rod characteristics before irradiation:	
Cladding material	Zirconium alloy
– Min thickness (mm)	0,52
– Min Outside Diameter (mm)	9,46
Pellets:	UNE
– Max diameter (mm)	8,20
– Max oxide density (97.5 % of theoretical density)	10,69
– Max initial enrichment $^{235}U/U_{total}$ (%)	5
– Max mass ratio $^{232}U/U_{total}$ (%)	5.10^{-8}
– Max mass ratio $^{234}U/U_{total}$l (%)	0,055
– Max mass ratio $^{236}U/U_{total}$ (%)	0,05
Max absolute internal pressure at 20 °C (bars)	32,7

(1) This number of rods corresponds to the maximum number of rods liable to be inserted into a structure (skeleton or canister), including the guide thimbles.

The mechanical strength properties of the cladding materials must meet either of the following criteria:

	1	2	3	4	5
$R_{p0.2}$ (MPa) ≥	520	455	350	250	290
R_m (MPa) ≥	710	590	480	400	440
A_t (%)≥	12	12	15	25	20

1.2 Consignment conditions

All the assemblies in a consignment must meet the conditions below.

type of assembly	max number of assemblies authorized per consignment	max initial enrichment per rod of each assembly in the consignment $^{235}U/U_{total}$ (%)	min number of rods in each assembly of the consignment (1)
17x17	2	5	264

(1) Incomplete assemblies may be equipped with solid steel (or Zy) bars possibly containing a neutron poison. The term « number of rods per assembly » means the total number of fuel rods and steel (Zy) bars.

All the assemblies in the consignment, except one, may be replaced by assembly skeletons.

The presence of materials more hydrogen-containing than water in the packaging is forbidden.

Max activity per packaging: The maximum activity of the content must be lower than 1 A2.
Physical state: Fuel rod assemblies consisting of sintered pellets placed in a Zirconium alloy cladding meeting either of the criteria given in paragraph 1.1 of this appendix.
Chemical form: Uranium oxide pellets (UO_2) and/or fuel pellets composed of a UO_2 blend whose enrichment in U235 is no more than 5% and of a substance acting as neutron poison with a blend density of no more than 10,69 g/cm^3.
Special form: Transported materials are not in special form.

2. CRITTICITY STUDY

It is described in report FFDC00817, given in appendix 12 of the safety file.
The hypotheses taken into account are as follows:
- Failure to comply with the geometrical integrity of the assemblies;
- Partial flooding;
- Waterlogging of all empty spaces.

Criticality Safety Index (CSI): 0,63 (Number N=80)
Special precautions when loading into reactor: None

Special precautions in transportation: None

The confinement system is made up of the features described in appendix 0 and, for the content section, of the following features:

- The Fuel Assembly characteristics as described in the table in paragraph 1.1;
- The cladding tubes which guarantee the containment of the fissile material in accident condition;
- The Fuel Assembly structure (grids, nozzles);
- The completeness of the assembly: any missing fuel rods are replaced by inert rods.

APPENDIX 5
FRESH PWR FUEL RODS

The safety file justifying this content is TFX/DC/2159 rev. D.

This content must be loaded into an FCC 3 version 1 container.

1. DÉFINITION OF THE AUTHORIZED RADIOACTIVE CONTENT

1.1 Fuel rod characteristics

The authorized radioactive content, as described in chapter 2.3 of the safety file, is made up of fresh fuel rods, destined for PWRs, as described below:

Fuel rod characteristics before irradiation:	**17x17 12 ft**
Max total mass per cavity (kg)	751
Max total mass of rods per box (kg)	665
Max mass of heavy metal per box (kg)	483(1)
Nominal active length (mm)	3658
Max number of fuel rods per box	267
Cladding material	Zirconium alloy
– Min thickness (mm)	0,52
– Min Outside Diameter (mm)	9,46
Pellets	UNE
– Max diameter (mm)	8,20
– Max oxide density (97.5 % theoretical density)	10,69
– Max initial enrichment $235U/U_{total}$ (%)	5
– Max mass ratio $^{232}U/U_{total}$ (%)	5.10^{-8}
– Max mass ratio $^{234}U/U_{total}$ (%)	0,055
– Max mass ratio $^{236}U/U_{total}$ (%)	0,05
– Min gadolinium oxide content by weight of gadolinia rods (%)	2
Max absolute internal pressure at 20 °C (bars)	32,7

(1) This maximum mass only covers contents with wedging and gadolinia contents.

The mechanical strength properties of the cladding materials must meet either of the following criteria:

	1	**2**	**3**	**4**	**5**
$R_{p0.2}$ (MPa) ≥	520	455	350	250	290
R_m (MPa) ≥	710	590	480	400	440
A_t (%)≥	12	12	15	25	20

1.2 Consignment Conditions

All the assemblies in a consignment must meet the conditions below.

Type of assembly	Max number of rods authorized per consignment	Max initial enrichment of each rod in the consignment ($^{235}U/U_{total}$)	Min number of rods in the consignment (1)
17x17	267	5	Full row of fuel or inert rods

(1) Incomplete fuel rod rows may be equipped with solid steel (or Zy) bars possibly containing a neutron poison. The term « number of rods per box » means the total number of fuel rods and steel (Zy) bars.

The presence of materials more hydrogen-containing than water in the packaging is forbidden.

Max activity per packaging: The maximum activity of the content must be lower than 1 A2.

Physical state: Fuel rod assemblies consisting of sintered pellets placed in a Zirconium alloy cladding meeting either of the criteria given in paragraph 1.1 of this appendix.

Chemical form: Uranium oxide pellets (UO_2) and/or fuel pellets composed of a UO_2 blend whose enrichment in U235 is no more than 5% and of a substance acting as neutron poison with a blend density of no more than 10,69 g/cm^3.

Special form: Transported materials are not in special form

2. INTERNAL LAYOUT

The internal layout consists of a rod box, as described in chapter 2.3 of the safety file.

2.1 Rod boxes

Non-assembled rods are grouped in rod boxes versions FCC3 which are inserted in place of the assemblies inside the FCC3 version 1.

The box consists of a U-shaped plate, closed at the ends and strengthened by two stringers welded to the upper part of the plate. It forms a square housing of section 214 x 214 mm^2.

An axial and radial wedging system makes it possible to adapt to the length of the rods and to hold them in place. A schematic is given in figure 5.1. A detailed description accompanied by drawings is supplied in appendix 1 of the safety file (note FFDC01038).

2.2 Wedges

A set of 2 wedges provides longitudinal restraint of the box in the cavity (a top wedge and a bottom wedge). A detailed description accompanied by drawings is supplied in appendix 1 of the safety file (note FFDC01038).

3. CRITICALITY STUDY

It is described in report FFDC01046, given in appendix 12 of the safety file.
The hypotheses taken into account are as follows:
- Partial flooding;
- Waterlogging of all empty spaces.

Criticality Safety Index (CSI):
- case of shipment of UO_2 rods with radial and axial wedging:
  - Criticality safety index: 0 (Number N infinite)
  - Special precautions when loading into reactor: None

- case of shipment of UO_2-Gd_2O_2 rods with or without radial and axial wedging:
  - Criticality safety index: 0 (Number N infinite)
  - Special precautions when loading into reactor: None

- case of shipment of UO_2 rods in small numbers, with or without radial and axial wedging
  - Criticality safety index: 50 (Number N = 1)
  - Special precautions when loading into reactor: respect a maximum UO_2 mass of 20 kg per package.

The confinement system is made up of the features described in appendix 0 and, for the content section, of the following features:
- The Fuel rod characteristics as described in the table in paragraph 1.1;
- The cladding tubes which guarantee the containment of the fissile material in accident condition.

FIGURE 5.1
ROD BOX DIAGRAM

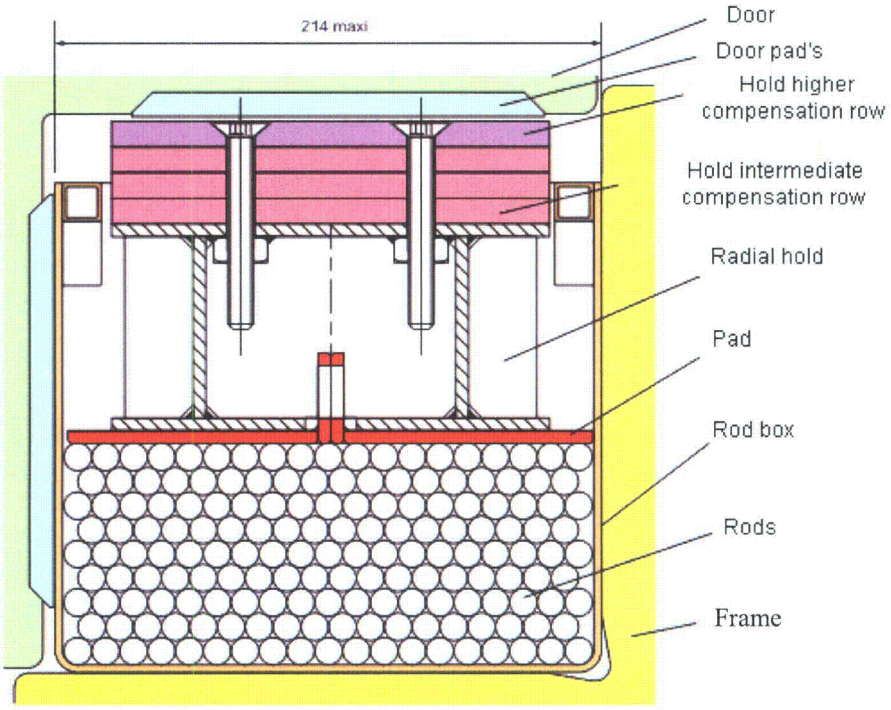

APPENDIX 9
FRESH PWR FUEL ASSEMBLIES

The safety file justifying this content is TFX/DC/2159 rev. D.

This content must be loaded into an FCC 3 version 1 container.

1. DEFINITION OF THE AUTHORIZED RADIOACTIVE CONTENT

1.1 Fuel assembly characteristics

The authorized radioactive content, as described in chapter 2.2 of the safety file, is made up of two fresh fuel rods, destined for PWRs, as described below:

Fuel assembly characteristics before irradiation:	**17x17 12 ft**
Type of array	17x17
Nominal pitch of array (mm)	12,6
Max total mass of the assembly with or without control component (kg)	751
Max mass of heavy metal per assembly (kg)	521
Nominal active length (mm)	3658
Max number of fuel rods	288(1)
Fuel rod characteristics before irradiation:	
Cladding material	Zirconium alloy
- Min thickness (mm)	0,52
- Min outside diameter (mm)	9,40
Pellets:	UNE
- Max diameter (mm)	8,30
- Max oxide density (97.5 % theoretical density)	10,69
- Max initial enrichment $^{235}U/U_{total}$ (%)	4,9
- Max mass ratio $^{232}U/U_{total}$ (%)	5.10^{-8}
- Max mass ratio $^{234}U/U_{total}$l (%)	0,055
- Max mass ratio $^{236}U/U_{total}$ (%)	0,05
Max absolute internal pressure at 20 °C (bars)	32,7

(1) This number of rods corresponds to the maximum number of rods liable to be inserted into a structure (skeleton or canister), including the guide thimbles..

The mechanical strength properties of the cladding materials must meet either of the following criteria:

	1	2	3	4	5
$R_{p0.2}$ (MPa) ≥	520	455	350	250	290
R_m (MPa) ≥	710	590	480	400	440
A_t (%)≥	12	12	15	25	20

1.2 Consignment conditions

All the assemblies in a consignment must meet the conditions below.

type of assembly	max number of assemblies authorized per consignment	max initial enrichment per rod of each assembly in the consignment $^{235}U/U_{total}$ (%)	min number of rods in each assembly of the consignment (1)
17x17	2	4,9	264

(1) Incomplete assemblies may be equipped with solid steel (or Zy) bars possibly containing a neutron poison. The term « number of rods per assembly » means the total number of fuel rods and steel (Zy) bars.

All the assemblies in the consignment, except one, may be replaced by assembly skeletons.

The presence of materials more hydrogen-containing than water in the packaging is forbidden.

Max activity per packaging: The maximum activity of the content must be lower than 1 A2.

Physical state: Fuel rod assemblies consisting of sintered pellets placed in a Zirconium alloy cladding meeting either of the criteria given in paragraph 1.1 of this appendix.

Chemical form: Uranium oxide pellets (UO_2) and/or fuel pellets composed of a UO_2 blend whose enrichment in U235 is no more than 4,9% and of a substance acting as neutron poison with a blend density of no more than 10,69 g/cm^3.

Special form: Transported materials are not in special form.

2. CRITICALITY STUDY

It is described in report FFDC00817, given in appendix 12 of the safety file and in report FFDC03125.

The hypotheses taken into account are as follows:

- Failure to comply with the geometrical integrity of the assemblies in accidental condition of transport;

- Partial flooding;
- Waterlogging of all empty spaces.

Criticality Safety Index (CSI): 0,63 (Number N=80)
Special precautions when loading into reactor: None
Special precautions in transportation: None
The confinement system is made up of the features described in appendix 0 and, for the content section, of the following features:

- The Fuel Assembly characteristics as described in the table in paragraph 1.1;
- The cladding tubes which guarantee the containment of the fissile material in accident condition;
- The Fuel Assembly structure (grids, nozzles);
- The completeness of the assembly: any missing fuel rods are replaced by inert rods.

APPENDIX 11
FRESH PWR FUEL RODS

The safety file justifying this content is TFX/DC/2159 rev. D.

This content must be loaded into an FCC 3 version 1 container.

1. DEFINITION OF THE AUTHORIZED RADIOACTIVE CONTENT

1.1. Fuel rod characteristics

The authorized radioactive content, as described in chapter 2.3 of the safety file, is made up of fresh fuel rods, destined for PWRs, as described below:

Fuel rod characteristics before irradiation:	**17x17 12 ft**
Max total mass per cavity (kg)	751
Max total mass of rods per box (kg)	665
Max mass of heavy metal per box (kg)	483(1)
Nominal active length (mm)	3658
Max number of fuel rods per box	267
Cladding material	Zirconium alloy
- Min thickness (mm)	0,52
- Min outside diameter (mm)	9,40
Pellets:	UNE
- Max diameter (mm)	8,30
- Max oxide density (97.5 % theoretical density)	10,69
- Max initial enrichment $235U/U_{total}$ (%)	4,9
- Max mass ratio $^{232}U/U_{total}$ (%)	5.10^{-8}
- Max mass ratio $^{234}U/U_{total}$ (%)	0,055
- Max mass ratio $^{236}U/U_{total}$ (%)	0,05
- Min gadolinium oxide content by weight of gadolinia rods (%)	2
Max absolute internal pressure at 20 °C (bars)	32,7

(1) This maximum mass only covers contents with wedging and gadolinia contents..

The mechanical strength properties of the cladding materials must meet either of the following criteria:

	1	2	3	4	5
$R_{p0.2}$ (MPa) ≥	520	455	350	250	290
R_m (MPa) ≥	710	590	480	400	440
A_t (%)≥	12	12	15	25	20

1.2 Consignment conditions

All the assemblies in a consignment must meet the conditions below.

Type of assembly	Max number of rods authorized per consignment	Max initial enrichment of each rod in the consignment ($^{235}U/U_{total}$)	Min number of rods in the consignment (1)
17x17	267	4,9	Full row of fuel or inert rods

(1) Incomplete fuel rod rows may be equipped with solid steel (or Zy) bars possibly containing a neutron poison. The term « number of rods per box » means the total number of fuel rods and steel (Zy) bars.

The presence of materials more hydrogen-containing than water in the packaging is forbidden.

Max activity per packaging: The maximum activity of the content must be lower than 1 A2.

Physical state: Fuel rod assemblies consisting of sintered pellets placed in a Zirconium alloy cladding meeting either of the criteria given in paragraph 1.1 of this appendix.

Chemical form: Uranium oxide pellets (UO_2) and/or fuel pellets composed of a UO_2 blend whose enrichment in U235 is no more than 4,9% and of a substance acting as neutron poison with a blend density of no more than 10,69 g/cm^3.

Special form: Transported materials are not in special form.

2. INTERNAL LAYOUT

The internal layout consists of a rod box, as described in chapter 2.3 of the safety file.

2.1 Rod boxes

Non-assembled rods are grouped in rod boxes versions FCC3 which are inserted in place of the assemblies inside the FCC3 version 1.

The box consists of a U-shaped plate, closed at the ends and strengthened by two stringers welded to the upper part of the plate. It forms a square housing of section 214 x 214 mm^2.

An axial and radial wedging system makes it possible to adapt to the length of the rods and to hold them in place. A schematic is given in figure 5.1. A detailed description accompanied by drawings is supplied in appendix 1 of the safety file (note FFDC01038).

2.2 Wedges

A set of 2 wedges provides longitudinal restraint of the box in the cavity (a top wedge and a bottom wedge). A detailed description accompanied by drawings is supplied in appendix 1 of the safety file (note FFDC01038).

3. CRITICALITY STUDY

It is described in report FFDC01046, given in appendix 12 of the safety file and in report FFDC03125.

The hypotheses taken into account are as follows:

- Partial flooding;
- Waterlogging of all empty spaces.

Criticality Safety Index (CSI):

- case of shipment of UO_2 rods with radial and axial wedging:
  - Criticality safety index: 0 (Number N infinite)
  - Special precautions when loading into reactor: None

- case of shipment of UO_2-Gd_2O_2 rods with or without radial and axial wedging:
  - Criticality safety index: 0 (Number N infinite)
  - Special precautions when loading into reactor: None

- case of shipment of UO_2 rods in small numbers, with or without radial and axial wedging
  - Criticality safety index: 50 (Number N = 1)
  - Special precautions when loading into reactor: respect a maximum UO_2 mass of 20 kg per package.

The confinement system is made up of the features described in appendix 0 and, for the content section, of the following features:

- The Fuel rod characteristics as described in the table in paragraph 1.1;
- The cladding tubes which guarantee the containment of the fissile material in accident condition.

FIGURE 11.1
ROD BOX DIAGRAM

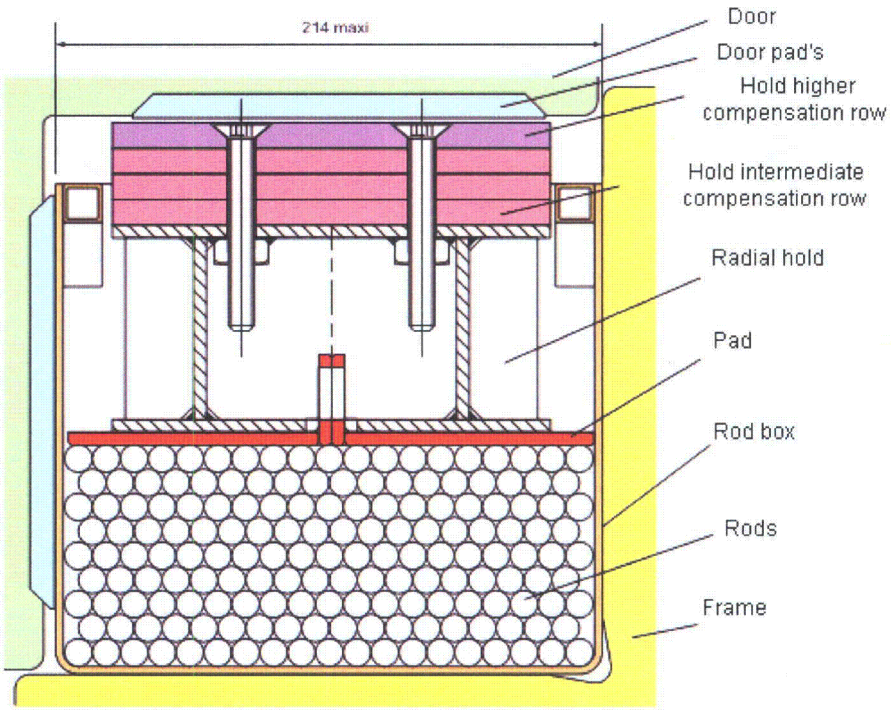

FRAMATOME ANP 10, Rue Juliette Récamier 69456 LYON CEDEX 06 **NUCLEAR FUEL** **DESIGN AND SALES DIVISION**	**Type of document:** Safety report (fuel packaging)	
	Class F	**Nb pages:** 79 **Nb appendices:** 16

Title of document

FCC 3 SHIPPING CONTAINER

Compliance with IAEA regulations on transportation of radioactive materials

KEYWORDS: CONTAINER - SAFETY - IAEA

Distribution	FF	FFXE	FFRC (LDR, OTM)	FFX	FFX	FFAF	NFPVED/ WEE	
Purpose of distribution	GED Document base	Circul.	For info.	For info	For info	DMN	For info	
Number	1	8	2	2	1	1	1	

D	04/06/2004	Caupenne&Co	E Faye		CFC	
REV	**DATE**	**AUTHOR**	**CHECK**	**MODIFICATIONS – OBSERVATIONS**	**VALIDITY**	**STATUS**

APPROVAL	229 K
U.D.:	C 963

CLASSIF: INTERNAL IDENTIFICATION NUMBER

T F X | | D C | 2 1 5 9 | E0

This document is the property of FRAMATOME NUCLEAR FUELS – Design & Sales Direction. It may not be used or communicated to any third parties without its prior written authorisation ; all precautions shall be taken to prevent its disclosure, law n° 67298 of 11/03/1957.

REVISIONS

DATE	INDICE	OBSERVATIONS
07/01/1999	A	First issue
28/06/1999	B	Document rewrite with inclusion of IPSN/DSIN comments made during progress meeting of 18/06/99 and fax SSTR/JYR/99.760 and 762 of 28/06/99
26/10/1999	C	Inclusion of comments made during preparatory meetings of 27/09/99 and 05/10/99 and plenary meeting of the Shipment Permanent Group of 11/10/99.
04/06/2004	D	Answer to comments in letter DSIN/SD1/n°0156/2002 of 18/02 2002 and inclusion of comments from FANC

FRAMATOME ANP – Nuclear Fuel – Design and Sales Division

FRAMATOME ANP – Nuclear Fuel – Design and Sales Division

CONTENTS

1. INTRODUCTION **10**

2. DESCRIPTION OF PACKAGING CONTENTS **12**

2.1 DESCRIPTION OF RADIOACTIVE MATERIALS **12**
2.2 DESCRIPTION OF FUEL ASSEMBLIES **13**
2.3 DESCRIPTION OF NON-ASSEMBLED RODS **19**
2.4 CALCULATION OF MAXIMUM ACTIVITY AND MATERIAL CLASSIFICATION **22**
2.4.1 Shipment of enriched natural uranium (ENU) 22
2.4.2 Shipment of reprocessed uranium (REPU) 23

3. PACKAGING DESCRIPTION **29**

3.1 GENERAL CHARACTERISTICS **29**
3.2 OUTLINE DIMENSIONS AND WEIGHT **29**
3.3 DESCRIPTION OF THE SUB-ASSEMBLIES **30**
3.3.1 Lower shell 30
3.3.2 Upper shell 30
3.3.3 Cradle 30
3.3.4 Internal system – frame and doors 31
3.4 WEIGHTS SPECIFICATION **35**
3.5 MATERIAL SPECIFICATIONS **35**

4. PROVISIONS AND INSPECTIONS FOR TRANSPORT **37**

4.1 ARTICLE 501: REQUIREMENTS APPLICABLE BEFORE FIRST SHIPMENT **37**
4.1.1 Definition of the containment envelope 37
4.1.2 Definition of the isolation system 37
4.1.3 Neutronic and thermal protection 38
4.1.4 Inspection prior to first shipment 38
4.2 ARTICLE 502: REQUIREMENTS APPLICABLE BEFORE EACH SHIPMENT **39**
4.2.1 Content inspection 39
4.2.2 Packaging inspection 39
4.2.3 Inspections during loading 39
4.3 REQUIREMENTS AND INSPECTIONS FOR CONTAMINATION AND LEAKAGE **39**
4.4 REQUIREMENTS FOR THE TRANSPORTATION OF LSA MATERIALS IN INDUSTRIAL PACKAGES **39**
4.5 DETERMINATION OF TRANSPORT INDICES **40**
4.5.1 Transport index for inspection of radiation exposure 40
4.5.2 Determination of the Criticality Safety Index 40
4.6 DETERMINATION OF THE PACKAGE CATEGORY **41**
4.7 MARKING AND LABELLING **42**
4.7.1 Marking 42
4.7.2 Labelling 43
4.8 LASHING **44**
4.10 FCC3 PACKAGING CONFIGURATIONS PER CONTENT **45**

5. ANALYSIS OF COMPLIANCE WITH REGULATORY REQUIREMENTS 46

5.1 GENERAL REMARKS 46
5.2 GENERAL REQUIREMENTS FOR PACKAGINGS AND PACKAGES 46
5.2.1 Article 606 46
5.2.2 Article 607 46
5.2.3 Article 608 47
5.2.4 Article 609 47
5.2.5 Article 610 47
5.2.6 Article 611 47
5.2.7 Article 612 47
5.2.8 Article 613 47
5.2.9 Article 614 48
5.2.10 Article 616 48
5.3 REQUIREMENTS FOR TYPE 2 INDUSTRIAL PACKAGES 48
5.3.1 Article621 48
5.3.2 Article 622 48
5.4 REQUIREMENTS FOR PACKAGES TRANSPORTING FISSILE MATERIALS 49
5.4.1 Article 672 49
5.4.2 Article 671 49
5.4.3 Article 675 49
5.4.4 Article 676 49
5.4.5 Articles 677, 678 and 679 50
5.4.6 Articles 681 and 682 51
5.4.7 Article 568 51
5.5 BEHAVIOUR OF THE PACKAGE DESIGN SUBJECTED TO REGULATORY TESTS 52
5.5.1 Introduction 52
5.5.2 Effects of the tests for proving capacity to withstand normal transport conditions 52
5.5.3 Cumulative effect of the tests for proving capacity to withstand accident transport conditions 56
5.5.4 Water leakage test for packages containing fissile materials 61
5.5.5 Conclusions of the regulatory tests 61

6. ANALYSIS OF THE COMPONENTS IMPORTANT FOR SAFETY 65

7. QUALITY ASSURANCE 68

7.1 GENERAL REMARKS 68
7.2 MANUFACTURING INSPECTIONS 68
7.2.1 Procurement inspection 68
7.2.2 In-process inspections 68
7.2.3 End of manufacturing inspections 68

8. OPERATION 77

8.1 INSTRUCTIONS FOR USE 77
8.2 CHECKING AND MAINTENANCE INSTRUCTIONS 77
8.3 MONITORING OPERATIONS AND MAINTENANCE 78

9. CONCLUSION 79

FRAMATOME ANP – Nuclear Fuel – Design and Sales Division

APPENDIX

APPENDIX 1: Drawing of the FCC3 packaging 12 ft - 17 × 17 design Version 1

- General assembly drawing - 229 K 0100 and associated lists
- Operating drawing - 229 K 0101
- Safety-related characteristics – Drawing 229 K 0102
- Assembly drawing "lower shell" – Drawing 229 K 0105
- Assembly drawing "upper shell" – Drawing 229 K 0110
- Sub-assembly drawing "cradle" – Drawing 229 K 0130
- Sub-assembly drawing "support frame" – Drawing 229 K 0145
- Sub-assembly drawing "left door" – Drawing 229 K 0170
- Rod channel - FCC packaging - FF DC 01038

APPENDIX 2: Drawing of the FCC3 packaging 12 ft - 15 x 15 design Version 1

- General assembly drawing 229 K 0200 and associated lists
- Operating drawing 229 K 0201
- Safety-related characteristics – Drawing 229 K 0202
- Sub-assembly drawing "left door" – Drawing 229 K 0270

APPENDIX 3: Drawing of the FCC3 packaging 12 ft - 14 x 14 – 8 and 10 ft design Version 2

- Assembly drawing 229 K 0300
- Operating drawing 229 K 0301
- Safety-related characteristics - Drawing 229 K 0302
- Sub-assembly "left door" 229 K 0370

APPENDIX 4: Photographs of the FCC3 packaging

APPENDIX 5: Calculation of the maximum thermal power of the transported fuel

- Calculation of the maximum thermal power – TFJN 99.0449

APPENDIX 6: Calculation of the lifting points - FCC3 packaging

- Verification of the sizing of the lifting points NVPM DC 990663 /EMA/CPA

APPENDIX 7: Calculation of the lashing points

- FCC3 packaging - Calculation of loads in welded joints of lashing boxes – FFDC01039

APPENDIX 8: Stacking test - FCC3 packaging

- Stacking test – FCC3 packaging
- FFXD – Packaging for fresh fuel assemblies 12 ft. – Verification of stacking resistance - PEVEDDC030222

APPENDIX 9: Chain lashing 1 to 8 FCC3 containers onto railers

- Transnucléaire drawing 9236-05

FRAMATOME ANP – Nuclear Fuel – Design and Sales Division

APPENDIX 10: Temperature resistance – 40°C

- Summary of impact tests - FFDC01079

APPENDIX 11: Mechanical tests in relation to accident transport conditions FCC3 packaging

- Selection of drop test configurations – TFXE/DC/2104
- Justification of mechanical strength of shell connection components during a 9 m straight drop - TFXE/DC/2214
- Drop tests program – TFX/DC/2108
- Drop tests report – TFX/DC/2132
- Rod channels for FCC packaging. Justification of mechanical strength of channel equipment – FFDC01074
- Transportation in FCC. Mechanical aspects related to the evolution of assembly constituent materials - FFDC00924

APPENDIX 12: Criticality study FCC3 packaging

- Safety analysis – FCC3 and FCC4 packaging criticality
  - Fuel assemblies 15 x 15 and 17 x 17,
  - Fuel assemblies 17 x 17 XL, 16 x 16 and 18 x 18 – FFDC00817
- Safety analysis – FCC3 and FCC4 packaging criticality – Rod channels transportation - FFDC01046
- Safety analysis – FCC3 version 2 packaging criticality – Fuel assemblies 14x14, 8" and 10" - FFDC01106

APPENDIX 13: REPU shipment – Leaching test – FCC3 packaging

- Test report – SQ/95/602Pbo/CC

APPENDIX 14: Thermal test relating to accident shipment conditions

- Thermal behaviour of FCC during regulatory thermal test – PVED DC 04055 WEE/WEE
- Rod behaviour during IAEA thermal test in FCC packaging – FFDC01091

APPENDIX 15: Procedures for loading/unloading of the contents in the FCC3 packaging

APPENDIX 16: Certificate for biological shielding tests on the FCC3 and FCC4 containers

- Radiological inspection report n°99374

FRAMATOME ANP – Nuclear Fuel – Design and Sales Division

FRAMATOME ANP – Nuclear Fuel – Design and Sales Division

LIST OF TABLES

- **Table 1**
  Correspondence between chapters and IAEA articles - 1996 Edition
- **Table 2.2**
  Characteristics of the fuel assemblies and rods transported in FCC3 packagings
- **Table 2.3.1**
  Characteristics of the non-assembled fuel rods transported in the FCC3 packagings
- **Table 2.3.2** Rod channels
- **Table 2.4.2.1**
  Activity of fuel assemblies containing REPU
- **Table 2.4.2.2**
  Material classification for 17x17 - 12 ft fuel assemblies containing REPU
- **Table 2.4.2.3**
  Material classification for 17x17 - 12 ft fuel assemblies containing REPU+ 24 fuel rods
- **Table 2.4.2.4**
  Material classification for 15x15 fuel assemblies containing REPU
- **Table 2.4.2.5**
  Material classification for 15x15 fuel assemblies containing REPU + 20 fuel rods
- **Table 2.4.2.6**
  Material classification for 14x14 fuel - 8 ft fuel assemblies containing REPU
- **Table 2.4.2.7**
  Material classification for 14x14 - 8 ft fuel assemblies containing REPU + 16 fuel rods
- **Table 2.4.2.8**
  Material classification for 14x14 – 10 ft fuel assemblies containing REPU
- **Table 2.4.2.9**
  Material classification for 14x14 – 10 ft fuel assemblies containing REPU + 16 fuel rods
- **Table 3.5**
  Properties of the FCC3 packaging
- **Table 4.5.2**
  Criticality Safety Index of the FCC3 packaging
- **Table 4.6**
  Package category

- **Table 4.9**
  FCC3 packaging configurations

- **Tableau 5.5.3.1**
  Representativity of prototype container n°2

- **Table 6.1**
  General analysis of the functions important for safety

- **Table 6.2**
  Analysis of components important for safety during regulatory tests

- **Table 7.2.3**
  Classification of safety-related components

FRAMATOME ANP – Nuclear Fuel – Design and Sales Division

LISTE OF FIGURES

- **Figure 2.2.1**
  17x17 - 12 ft fuel assembly
- **Figure 2.2.2**
  15x15 fuel assembly
- **Figure 2.2.3**
  14x14 - 8 ft fuel assembly
- **Figure 2.2.4**
  14x14 - 10 ft fuel assembly
- **Figure 2.3.1**
  Rod channels
- **Figure 3.1.1**
  FCC3 packaging - Overview with container closed
- **Figure 3.1.2**
  FCC3 packaging – Arrangement of fuel assemblies
- **Figure 3.1.3**
  FCC3 packaging - Overview of opened container, support frame in vertical position
- **Figure 5.5.2.3**
  Containers stacking possibilities (storage and transportation)
- **Figure 5.5.3.1.1a**
  Drop test - Accident transport conditions - Drop on bar N°1
- **Figure 5.5.3.1.1b**
  Drop test - Accident transport conditions - Drop on bar N°2
- **Figure 5.5.3.1.2**
  Drop test - Accident transport conditions - 9 m flat drop

FRAMATOME ANP – Nuclear Fuel – Design and Sales Division

FRAMATOME ANP – Nuclear Fuel – Design and Sales Division

LIST OF REFERENCES

[1]		"Regulations regarding the Transportation of Radioactive Materials" 1996 Edition - Instructions - N° TS-R1 - Collation of IAEA Safety Standards
[2]	**NF EN 10025**	Structural Steel hot-rolled products Technical Conditions - Delivery - (Classification Index: A 35-501)
[3]	**NF EN 20898-1**	Mechanical Characteristics - Fixings (Classification Index: E 25-100-1)
[4]		"Specifications Manual for the qualification of welding operation methods" AQUAP (Association for the Quality of HP Equipment) SADAVE (Publishers for the APAVE Group)
[5]	**NF EN 288**	Description and qualification of the methods used in welding metallic materials - (Classification Index : A 89-010) Section 1 : General Rules – Fusion Welding Section 2 : Description of welding methods – Arc Welding Section 3 : Qualification testing for steel arc welding methods
[6]	**NF EN 287-1**	Welder Qualification Tests – Fusion Welding Section 1 : Steels - (Classification Index : A 88-110-1)
[7]	**NF A 36-010**	Selection of steel quality for use in metallic boiler works or constructions towards brittle fracture hazards
[8]	**NF A 35-557**	Metallurgical Products – Special Steels suitable for thermal processing for high-performance external thread fixing components used in mechanical constructions -
[9]	**TFX/DC/2116**	Materials Specifications – Neutron-absorbent Resin for Assembly Transport Containers
[10]	**RCC - MR**	Mechanical Equipment Design & Construction Regulations regarding RNR Nuclear Islands – May 1993
[11]	**TFXE/96/0084**	RCC3 - RCC4 : Evaluation of the behaviour of fuel rods during fire testing – Pellet Ejection Test
[12]	**NF EN 10088-3**	Stainless Steels - (Classification Index: A 35-574) Section 3 : Technical Conditions relating to the delivery of part-finished products, bars, machined wires and profiles for general purpose use.
[13]	**NF EN 10113-1**	Hot-rolled, weldable products in fine-grain structural steel Section 1 : General Delivery Conditions - (Classification Index: A 36-201)
[14]	**TFX/DC/2251**	Container for 2 x New UO2 Fuel Assemblies – Verification of opening pressures for vent holes on doors and frame.

FRAMATOME ANP – Nuclear Fuel – Design and Sales Division

1. INTRODUCTION

The fresh nuclear fuel for use in powering PWR nuclear power plants is made up of fuel rods assembled to form an array. These products need to be transported between their place of production (factories) and the nuclear power plants either in the form of fuel assemblies, or in the form of non-assembled rods.

This report addresses the transportation of the following content:

- fuel assemblies with a nominal length of 8, 10 and 12 feet,
- non-assembled rods for assemblies with a nominal length of 8, 10 and 12 feet,

in packagings (containers) designated throughout this document by the term "FCC3"(*).

This "FCC3" packaging re-uses the shells formerly used by the "RCC3", but incorporates a new internal equipment system which comes in two versions, depending on the content:

- Version 1: for fuel assemblies composed of a 17x17 or 15x15 square fuel rod array or for non-assembled fuel rods pre-packed in channels,
- Version 2: for fuel assemblies composed of a 14x14 (8 and 10 ft) square fuel rod array.

The rods in either of these versions can be made from Enriched Natural Uranium (ENU) or from Enriched Reprocessed Uranium (REPU).

The packaging/content combination takes the regulatory name of "package". These packages must meet regulatory shipping requirements. For the "FCC3", the modes of transport envisaged are: by road, rail and sea, but exclude shipment by air. The "FCC3" packages must therefore comply with the following applicable Regulations:

- European Agreement on the International Carriage of Dangerous Goods by Road (ADR),
- Regulation governing International Rail Transportation of Dangerous Goods (RID),
- International Maritime Code for Dangerous Goods (IMDG).

However, the aforementioned Regulations simply repeat, in their entirety, the requirements laid down in the IAEA transportation regulation (a 1996 edition) governing radioactive materials, packagings, packages and testing.

Evidence of package compliance is presented with reference to the IAEA Regulation.

(*) The FCC3 packaging is very similar to the FCC4, excepted for its length, 4923 mm instead of 5740 mm, and the absence of any lifting points on the lower shell. Considering the similarity of the two designs, their individual safety reports also have the same structure.

Note:
This document refers to current IAEA regulations - 1996 edition [1].

Table 1 gives the correspondence between the chapters of this document and the articles of the 1996 edition.

Table 1
Correspondence between chapters and IAEA articles - edition 1996

Chapters	1996 edition
Quality Assurance	310
Activity limit and fissile material limits	401 to 419
General requirements for all packagings and packages	606 to 616
Requirements for type A packages	633 to 649
Requirements for packages containing fissile materials	671 to 682
Package tests	713 to 733
Tests for demonstrating ability to withstand normal shipment conditions	719 to 724
Tests for demonstrating ability to withstand accident shipment conditions	726 to 729
Water leakage tests for packages containing fissile materials	731 to 733

FRAMATOME ANP – Nuclear Fuel – Design and Sales Division

FRAMATOME ANP – Nuclear Fuel – Design and Sales Division

2. DESCRIPTION OF PACKAGING CONTENTS

2.1 Description of radioactive materials

The following table presents the various radioactive materials transported in FCC3 packagings.

Characteristics of contained radioactive materials	
Maximum thermal power released	0.44 W (Appendix 5)
Emitted radiation	α, β for fuel containing ENU α, β, γ, (the latter being the main contributor) for fuel containing REPU
ENU isotopic vector for 1g of uranium	U 234 ≤ 4.10^{-4} (g/gU) U 235 ≤ 5.10^{-2} (g/gU) U 236 ≤ 3.10^{-4} (g/gU) U 238 > 0.94 (g/gU)
REPU isotopic vector for 1g of uranium See Appendix 5	U 232 ≤ 2.10^{-8} (g/gU) U 234 ≤ 2.10^{-3} (g/gU) U 235 ≤ 5.10^{-2} (g/gU) U 236 ≤ 2.10^{-2} (g/gU) U 238 > 0.92 (g/gU)
Physical state and chemical form	sintered UO_2 pellets and/or mix of UO_2 + material acting as neutron poison.
Maximum U 235 enrichment	5 %
Density	97.5 % of UO_2 theoretical density: 10.69
Special form	No

FRAMATOME ANP – Nuclear Fuel – Design and Sales Division

2.2 Description of fuel assemblies

The various types of fuel assembly to be transported differ either in the number and diameter of the fuel rods they contain, or in their length.

The detailed characteristics of the transported fuel assemblies, together with the corresponding masses, are given in Table 2.2 below.

The general composition of the assemblies, common to all the types, is illustrated in Figures 2.2.1, 2.2.2, 2.2.3 and 2.2.4. It comprises:

- *an inert supporting structure (skeleton)* composed of zirconium alloy guide thimbles (and an instrumentation tube for 15x15 and 17x17 type assemblies) fixed at their ends to 2 stainless steel nozzles. Zirconium alloy grids, with a square-shaped honeycombed structure, are arranged at regular intervals along the tubes. They act both as spacers for the tubes and as a restraining structure for the fuel rods. Some assemblies may be equipped with mid-span mixing grids (MSMG) which are added to the support grids.
- *fuel rods*, consisting of zirconium alloy claddings (with end plugs), filled with sintered UO_2 pellets and/or a mixture of UO_2 + neutron poison material. This stack of pellets held in place by a compression spring constitutes the fissile column. The rods are pressurized with helium up to a maximum absolute pressure of 32.7 bars at room temperature. They are held in place by spacer grids within the fuel assembly.

During transportation, the fuel assemblies may contain accessories referred to as "core components"; designed to facilitate the control of the nuclear reactions or of the heat exchanges in the reactor. These core components are made up of rods which insert into the guide thimbles and are of 3 types:

- *RCCAs* consisting either of absorber rods whose stainless steel claddings are filled with Ag-In-Cd (silver - indium - cadmium) or B4C (boron carbide), or absorber rods containing Ag-In-Cd and inert rods (stainless steel claddings containing stainless steel).
- *"poison" rod clusters* which are "thimble plug" assemblies in which steel bars have been replaced by stainless steel claddings containing borosilicate glass.
- *"inert"* so-called "thimble plug" assemblies whose rods are stainless steel bars.

For incomplete fuel assemblies, the missing UO2 rods will be replaced by cylinders of the same outer diameter, displacing an identical volume. These may be either rods containing depleted uranium and / or neutron poison or a metallic material, or bars filled with metallic material (note: "metallic material" is understood to mean any material commonly used in PWRs).

FRAMATOME ANP – Nuclear Fuel – Design and Sales Division

Table 2.2
Characteristics of the fuel assemblies and rods transported in FCC3 packagings

	17x17 - 12 ft	15x15	14x14 - 8 ft	14x14 - 10 ft
Assembly				
Top nozzle section (mm)	214	214	197	197
Bottom nozzle section (mm)	214	214	197	197
Nominal length (mm)	4058	4097	2898	3506
Mass max tolerances(kg)	691	675	405	503
Mass with nom tolerances (kg)	678	667	398	493
Max core component mass (kg)	66	74	-	-
Grid				
Number	8	7	6	7
Envelope (mm)	214	214	196	196
Guide thimbles				
Number	24	20	16	16
Material	Zirconium alloy	Zirconium alloy	Zirconium alloy	Zirconium alloy
Nominal OD (mm)	12	14	14	14
Nominal ID (mm)	11.2	13	13	13
Instrumentation tube				
Material	Zirconium alloy	Zirconium alloy	no instrumentation tube	no instrumentation tube
Nominal OD (mm)	12.45	14	-	-
Nominal ID (mm)	11.45	13	-	-
Fuel rods				
Number per assembly	264	204	179	179
Pitch (mm)	12.6	14.3	14.1	14.1
Cladding material	Zirconium alloy	Zirconium alloy	Zirconium alloy	Zirconium alloy
Min OD (mm)	9.46	10.68	10.68	10.68
Min thickness (mm)	0.52	0.57	0.57	0.57
Fissile material (*)				
Type of fuel	ENU or REPU	ENU or REPU	ENU or REPU	ENU or REPU
Max pellet diameter (mm)	8.20	9.31	9.4	9.4
Rod active length (mm)	3658	3658	2413	3048
Max UO2 mass per assembly (kg)	541	535	317	401
U235 enrichment (%)	5	5	5	5
Max density of UO2 pellets (97,5%)	10.69	10.69	10.69	10.69
Fissile cross-section (mm)	214x214	214x214	197x197	197x197

(*) Note: Here zirconium alloy is understood to mean any non-irradiated zirconium alloy used as a constituent of a PWR fuel assembly. When used for the rod cladding, this alloy must also meet the conditions specified in paragraphs 5.5.3.1 and 5.5.3.2 of this document.

(*) The pellet height is not a safety feature. In all the criticality studies, it is the fissile column height which is modelled.

Figure 2.2.1 17x17 - 12 ft fuel assembly

DRAWING WITHELD UNDER 10 CFR 2.390

Figure 2.2.2
15x15 fuel assembly

DRAWING WITHELD UNDER 10 CFR 2.390

Figure 2.2.3
14x14 - 8 ft fuel assembly

DRAWING WITHELD UNDER 10 CFR 2.390

Figure 2.2.4

DRAWING WITHELD UNDER 10 CFR 2.390

DRAWING WITHELD UNDER 10

FRAMATOME ANP – Nuclear Fuel – Design and Sales Division

2.3 Description of non-assembled rods

Fuel rods are constituted of zirconium alloy tubular cladding (with a plug at both ends), filled with sintered UO_2 uranium oxide pellets and/or sintered fuel pellets constituted by a mixture of UO_2 and a neutron poison material. This stack of pellets held in place by a compression spring forms the fissile column (active length). The rods are filled with helium up to an absolute pressure of 32.7 bars maximum at room temperature

Table 2.3.1
Characteristics of the non-assembled fuel rods transported in the FCC3 packagings

Type of rods	17x17 « 12 ft »	15x15	14x14 « 8 ft »	14x14 « 10 ft »
Cladding Material:	Zirconium alloy	Zirconium alloy	Zirconium alloy	Zirconium alloy
. minimum OD (mm)	9.46	10.68	10.68	10.68
. minimum thickness (mm)	0.52	0.57	0.57	0.57
Nominal active length (mm)	3658	3658	2413	3048
Maximum uranium 235 enrichment per rod (%):	5	5	5	5
Maximum pellet diameter (mm)	8.20	9.31	9.40	9.40
Total nominal rod length (mm)	3867	3874	2629	3209
Rod mass at maximum tolerances (kg)	2.49	3.17	2.12	2.65
Rod mass at nominal tolerances (kg)	2.45	3.11	2.08	2.60
Maximum density of UO_2 pellets (97.5%)	10.69	10.69	10.69	10.69

Note: Here, zirconium alloy is understood to mean any non-irradiated zirconium alloy used as a constituent of a PWR fuel assembly. When used for the rod cladding, this alloy must also meet the conditions specified in paragraphs 5.5.3.1 and 5.5.3.2 of the present document.

These non-assembled rods are grouped in FCC3 fuel rod channels, which are inserted in place of fuel assemblies in the FCC3 version 1.

These FCC 3 rod channels are designed for the transportation of all types of rods 12, 10 and 8 ft.

The channel is made of a U-shaped plate closed at the ends and reinforced with two stringers welded on the upper part of the plate.

A radial and axial wedging system adapts to the length of the rods and ensures their positioning. A set of 2 wedges ensures the longitudinal positioning of the channel inside the cavity.

The wedging system ensures the safe position of the rods within the channel and of the channel inside the cavity, both in transport conditions and in the event of an accident.

The channel is filled with successive full rows of rods. If a row of fuel rods is incomplete, it will be completed with inert rods (replacement rods).

The basic diagram is shown on Figure 2.3.1. A detailed description with drawings is given in Appendix 1.

Note: The maximum number of loaded rods is not based on criticality concerns, only on the available stacking space and compliance with the maximum weight content.

Figure 2.3.1
Rod channel

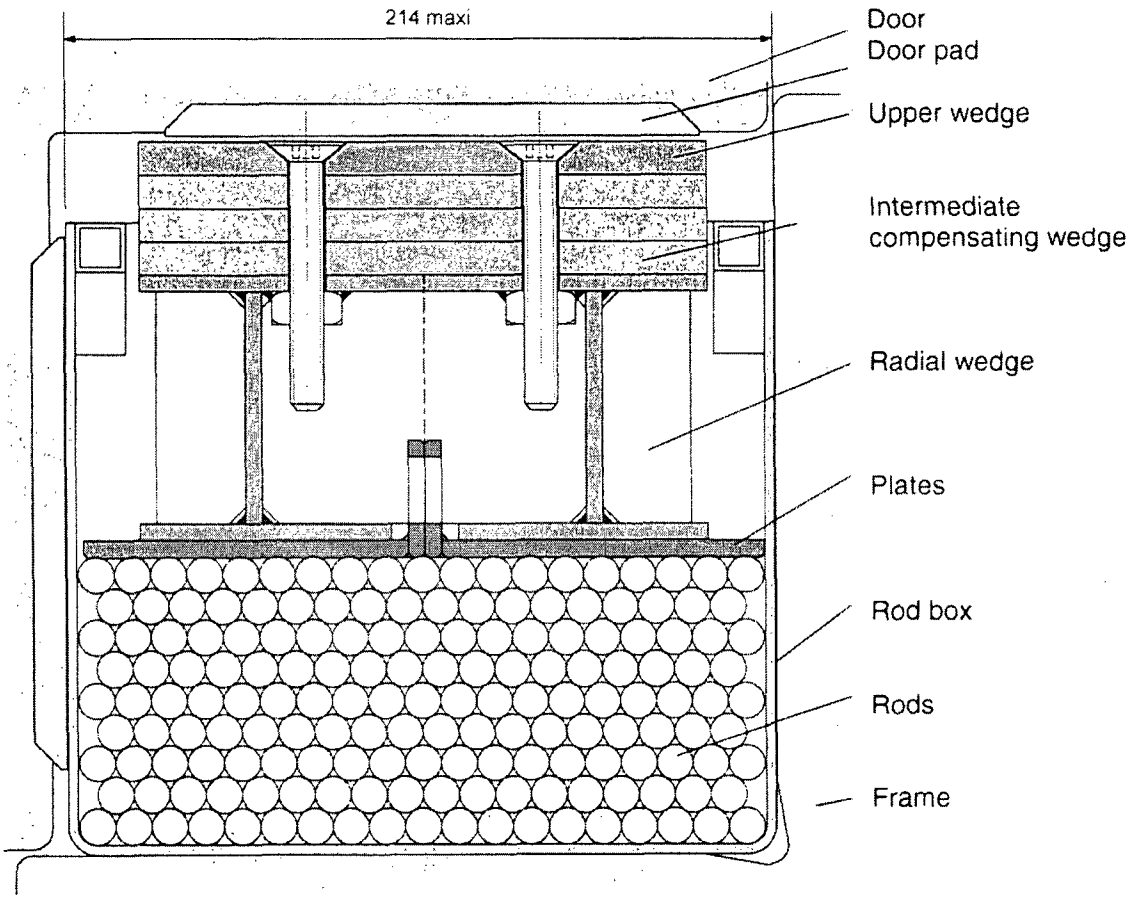

FRAMATOME ANP – Nuclear Fuel – Design and Sales Division

FRAMATOME ANP – Nuclear Fuel – Design and Sales Division

Table 2.3.2
Rod channels

Type of rods	17x17 « 12 ft »	15x15	14x14 « 8 and 10 ft »
Maximum number of rods per channel	267	241	241
Maximum UO2 mass per channel (kg)	548	635	465/586
Rod mass, max tolerances (kg)	665	765	566/708
Rod mass, nom tolerances (kg)	655	750	557/695
masse totale maximale (kg)	751	751	751

FRAMATOME ANP – Nuclear Fuel – Design and Sales Division

2.4 Calculation of maximum activity and material classification

2.4.1 Shipment of enriched natural uranium (ENU)

For ENU shipment, the A2 value is unlimited (cf. Table I of [1]). Therefore there is no activity restriction for ENU shipment.

Maximum total activity per assembly type:

	17x17 12 ft	**15x15**	**14x14 8 ft**	**14x14 10 ft**
Max UO_2 mass (kg)	541	535	317	401
Max activity per assembly (TBq)	5.20×10^{-2}	5.14×10^{-2}	3.05×10^{-2}	3.86×10^{-2}
Max activity per container (TBq)	0.104	0.103	0.061	0.771

	17x17 12 ft + 24 rods	**15x15 + 20 rods**	**14x14 8 ft + 16 rods**	**14x14 10 ft + 16 rods**
Max UO_2 mass (kg)	591	588	346	437
Max activity per assembly (TBq)	5.67×10^{-2}	5.65×10^{-2}	3.33×10^{-2}	4.21×10^{-2}
Max activity per container (TBq)	0.113	0.113	0.066	0.084

Maximum total activity per channel:

	17x17 12 ft	**15x15**	**14x14 8 ft**	**14x14 10 ft**
Max number of rods per channel	267	241	241	241
Max UO_2 mass (kg)	548	632	436	552
Max activity per assembly (TBq)	5.26×10^{-2}	6.07×10^{-2}	4.20×10^{-2}	5.31×10^{-2}
Max activity per container (TBq)	0.105	0.122	0.084	0.111

These radioactive materials contain fissile materials. They must therefore be classified LSA II as per article 226 of the Regulations [1].

The material is classified fissile and Low Specific Activity:

- **LSA II as per the IAEA 96 regulations**

2.4.2 Shipment of reprocessed uranium (REPU)

For REPU shipment, a *blend* is involved. The A2 value of the blend is calculated from the following formula (articles 304 and 404):

$$A2\,of\,blend = \frac{1}{\sum \frac{f(i)}{A2(i)}} = \frac{Blend\,activity}{\frac{Activity(U232)}{A2(U232)} + \frac{Activity(U234)}{A2(U234)} + \frac{Activity(U235)}{A2(U235)} + \frac{Activity(U236)}{A2(U236)} + \frac{Activity(U238)}{A2(U238)}}$$

Tables 2.4.2.1 to 2.4.2.9 collect and present:

A) input data for the calculations:

- The specific activity of each of the radioisotopes (taken from Table AI-1 of [1]) in Bq/g
- The max. mass of Uranium in each assembly type (see § 2.4.1).

B) Results of calculations:

- The A2 value of the blend (TBq) for the various radioactive contents of the FCC3 packaging.

  The A2 of the blend is calculated by taking into consideration the uranium in the rods and does not take into account the fission products, giving a conservative result.
- The total activity of an assembly (TBq), taking into account only the uranium. The uranium mass is assumed equal to the uranium oxide maximum mass, including tolerances, multiplied by the ratio 238/270.
- The total activity of an assembly (TBq) after integration of the fission products (average specific activity ($\gamma+\alpha$) assumed conservatively to be equal to 5000 Bq/g U - Appendix 5).
- The average specific activity of the UO_2 material (Tbq/g) and the comparison with the criteria given in article 404 of Regulation [1]: LSA II material: 10^{-4} A2/g and LSA III material: 2.10^{-3} A2/g.

Maximum total activity per assembly type:

	17x17 12 ft	**15x15**	**14x14 8 ft**	**14x14 10 ft**
Max UO_2 mass (kg)	541	535	317	401
Max activity per assembly (TBq)	0.261	0.258	0.153	0.193
Max activity per container (TBq)	0.522	0.516	0.306	0.387

FRAMATOME ANP – Nuclear Fuel – Design and Sales Division

	17x17 12 ft + 24 rods	15x15 + 20 rods	14x14 8 ft + 16 rods	14x14 10 ft + 16 rods
Max UO_2 mass (kg)	591	588	345	437
Max activity per assembly (TBq)	0.284	0.283	0.166	0.209
Max activity per container (TBq)	0.569	0.566	0.333	0.421

Maximum total activity per channel:

	17x17 12 ft	15x15	14x14 8 ft	14x14 10 ft
Max number of rods per channel	267	241	241	241
Max UO_2 mass (kg)	548	632	426	539
Max activity per assembly (TBq)	0.264	0.305	0.204	0.258
Max activity per container (TBq)	0.528	0.610	0.411	0.520

C) Classification scheme:

- The maximum total activity of two assemblies is greater than the value A2 of the maximum activity of radioactive materials authorised in a type A package,
- The material (uranium oxide) is in solid form and uniformly distributed in the solid,
- The material is fissile.
- The average specific activity of the material is less than 10^{-4} A2/g – criterion for type II low-specific activity material (article 226 of [1]).
- On the basis of the test in Appendix 13, the value of the maximum activity lost by leaching in agitated water is set at a value less than 100 Bq for a UO_2 mass of 10.86 g. This value as a proportion of the masses of the various contents at no time leads to a released activity in excess of 0.1A2, which is in line with the criterion in article 703 of the Regulation [1].

The material is classified fissile and Low Specific Activity:

. **LSA III as per the IAEA 96 regulation**

FRAMATOME ANP – Nuclear Fuel – Design and Sales Division

Table 2.4.2.1
Activity of fuel assemblies containing REPU

Isotope	Quantity (g/g uranium)	specific activity Bq/g	Activity for 1g uranium (Bq)	Activity 1g uranium (TBq)	A2 (TBq) **IAEA 96**
U232	2.00E-08	8.28E+11	1.66E+04	1.66E-08	1.00E-03
U234	2.00E-03	2.31E+08	4.62E+05	4.62E-07	6.00E-03
U235	5.00E-02	8.00E+04	4.00E+03	4.00E-09	unlimited
U236	2.00E-02	2.40E+06	4.79E+04	4.79E-08	6.00E-03
U238	9.28E-01	1.24E+04	1.15E+04	1.15E-08	unlimited
Total (g)	1		5.42E+05	5.42E-07	

Table 2.4.2.2
Material classification for 17x17 - 12 ft fuel assemblies containing REPU

	IAEA 96
A2 : Max activity of radioactive materials authorised in a package A (TBq)	**5.34E-03**
Total activity of an assembly (only U included) (TBq)	2.58E-01
Total activity of an assembly (integration of fission product activity) (TBq)	2.61E-01
Total activity of a packaging (TBq)	**5.22E-01**
Total activity of a packaging expressed in A2	**98 A2**
Activity lost by leaching of 2 assemblies (TBq)	9.96E-06
Leaching criterion : 0.1 A2 (TBq)	**5.34E-04**
Compliance with leaching criterion	**YES**
Specific activity of REPU material (Bq/g)	5.42E+05
Average specific activity of the REPU material (UO2 mass) (A2/g)	**8.95E-05 A2/g**
Average specific activity criterion for an LSA II material (TBq/g)	1E-04 A2/g
Average specific activity for an LSA III material (TBq/g)	2E-03 A2/g
Material classification	**LSA II**

Table 2.4.2.3
Material classification for 17x17 - 12 ft fuel assemblies containing REPU+ 24 fuel rods

	IAEA 96
A2: max activity of radioactive materials contained in package A (TBq)	**5.34E-03**
Total activity of an assembly (only U included) (TBq)	2.82E-01
Total activity of an assembly (integration of fission product activity) (TBq)	2.84E-01
Total activity of a packaging (TBq)	**5.69E-01**
Total activity of a packaging expressed in A2	**107 A2**
Activity lost by leaching of 2 assemblies (TBq)	1.09E-05
Leaching criterion : 0.1 A2 (TBq)	**5.34E-04**
Compliance with leaching criterion	**YES**
Specific activity of REPU material (Bq/g)	5.42E+05
Average specific activity of the material (UO2 mass) (A2/g)	**8.95E-05 A2/g**
Average specific activity criterion for an LSA II material (TBq/g)	1E-04 A2/g
Average specific activity criterion for an LSA III material (TBq/g)	2E-03 A2/g
Material classification	**LSA II**

FRAMATOME ANP – Nuclear Fuel – Design and Sales Division

Table 2.4.2.4
Material classification for
15x15 fuel assemblies containing REPU

	IAEA 96
A2: max activity of radioactive materials contained in package A (TBq)	**5.34E-03**
Total activity of an assembly (only U included) (TBq)	2.56E-01
Total activity of an assembly (integration of fission product activity) (TBq)	2.58E-01
Total activity of a packaging (TBq)	**5.16E-01**
Total activity of a packaging expressed in A2	**97 A2**
Activity lost by leaching of 2 assemblies (TBq)	9.85E-06
Leaching criterion : 0.1 A2 (TBq)	**5.34E-04**
Compliance with leaching criterion	**YES**
Specific activity of REPU material (Bq/g)	5.42E+05
Average specific activity of the material (UO2 mass) (A2/g)	**8.95E-05 A2/g**
Average specific activity criterion for an LSA II material (TBq/g)	1E-04 A2/g
Average specific activity criterion for an LSA III material (TBq/g)	2E-03 A2/g
Material classification	**LSA II**

Table 2.4.2.5
Material classification for
15x15 fuel assemblies containing REPU + 20 fuel rods

	IAEA 96
A2: max activity of radioactive materials contained in package A (TBq)	**5.34E-03**
Total activity of an assembly (only U included) (TBq)	2.81E-01
Total activity of an assembly (integration of fission product activity) (TBq)	2.83E-01
Total activityh of a packaging (TBq)	**5.66E-01**
Total activity of a packaging expressed in A2	**106 A2**
Activity lost by leaching of 2 assemblies (TBq)	1.08E-05
Leaching criterion : 0.1 A2 (TBq)	**5.34E-04**
Compliance with leaching criterion	**YES**
Specific activity of REPU material (Bq/g)	5.42E+05
Average specific activity of the material (UO2 mass) (A2/g)	**8.95E-05 A2/g**
Average specific activity criterion for an LSA II material (TBq/g)	1E-04 A2/g
Average specific activity criterion for an LSA III material (TBq/g)	2E-03 A2/g
Material classification	**LSA II**

FRAMATOME ANP – Nuclear Fuel – Design and Sales Division

Table 2.4.2.6
Material classification for
14x14 fuel - 8 ft fuel assemblies containing REPU

	IAEA 96
A2: max activity of radioactive materials contained in package A (TBq)	**5.34E-03**
Total activity of an assembly (only U included) (TBq)	1.51E-01
Total activity of an assembly (integration of fission product activity) (TBq)	1.53E-01
Total activityh of a packaging (TBq)	**3.06E-01**
Total activity of a packaging expressed in A2	**57 A2**
Activity lost by leaching of 2 assemblies (TBq)	5.84E-06
Leaching criterion : 0.1 A2 (TBq)	**5.34E-04**
Compliance with leaching criterion	**YES**
Specific activity of REPU material (Bq/g)	5.42E+05
Average specific activity of the material (UO2 mass) (A2/g)	**8.95E-05 A2/g**
Average specific activity criterion for an LSA II material (TBq/g)	1E-04 A2/g
Average specific activity criterion for an LSA III material (TBq/g)	2E-03 A2/g
Material classification	**LSA II**

Table 2.4.2.7
Material classification for
14x14 - 8 ft fuel assemblies containing REPU + 16 fuel rods

	IAEA 96
A2: max activity of radioactive materials contained in package A (TBq)	**5.34E-03**
Total activity of an assembly (only U included) (TBq)	1.65E-01
Total activity of an assembly (integration of fission product activity) (TBq)	1.66E-01
Total activityh of a packaging (TBq)	**3.33E-01**
Total activity of a packaging expressed in A2	**62 A2**
Activity lost by leaching of 2 assemblies (TBq)	6.35E-06
Leaching criterion : 0.1 A2 (TBq)	**5.34E-04**
Compliance with leaching criterion	**YES**
Specific activity of REPU material (Bq/g)	5.42E+05
Average specific activity of the material (UO2 mass) (A2/g)	**8.95E-05 A2/g**
Average specific activity criterion for an LSA II material (TBq/g)	1E-04 A2/g
Average specific activity criterion for an LSA III material (TBq/g)	2E-03 A2/g
Material classification	**LSA II**

Table 2.4.2.8
Material classification for
14x14 – 10 ft fuel assemblies containing REPU

	IAEA 96
A2: max activity of radioactive materials contained in package A (TBq)	**5.34E-03**
Total activity of an assembly (only U included) (TBq)	1.92E-01
Total activity of an assembly (integration of fission product activity) (TBq)	1.93E-01
Total activityh of a packaging (TBq)	**3.87E-01**
Total activity of a packaging expressed in A2	**72 A2**
Activity lost by leaching of 2 assemblies (TBq)	7.38E-06
Leaching criterion : 0.1 A2 (TBq)	**5.34E-04**
Compliance with leaching criterion	**YES**
Specific activity of REPU material (Bq/g)	5.42E+05
Average specific activity of the material (UO2 mass) (A2/g)	**8.95E-05 A2/g**
Average specific activity criterion for an LSA II material (TBq/g)	1E-04 A2/g
Average specific activity criterion for an LSA III material (TBq/g)	2E-03 A2/g
Material classification	**LSA II**

Table 2.4.2.9
Material classification for
14x14 – 10 ft fuel assemblies containing REPU + 16 fuel rods

	IAEA 96
A2: max activity of radioactive materials contained in package A (TBq)	**5.34E-03**
Total activity of an assembly (only U included) (TBq)	2.09E-01
Total activity of an assembly (integration of fission product activity) (TBq)	2.11E-01
Total activityh of a packaging (TBq)	**4.21E-01**
Total activity of a packaging expressed in A2	**79 A2**
Activity lost by leaching of 2 assemblies (TBq)	8.05E-06
Leaching criterion : 0.1 A2 (TBq)	**5.34E-04**
Compliance with leaching criterion	**YES**
Specific activity of REPU material (Bq/g)	5.42E+05
Average specific activity of the material (UO2 mass) (A2/g)	**8.95E-05 A2/g**
Average specific activity criterion for an LSA II material (TBq/g)	1E-04 A2/g
Average specific activity criterion for an LSA III material (TBq/g)	2E-03 A2/g
Material classification	**LSA II**

FRAMATOME ANP – Nuclear Fuel – Design and Sales Division

3. PACKAGING DESCRIPTION

The FCC3 packaging only differs from the FCC4 packaging in its geometrical characteristics (length, weight, number of cradle cross-pieces and number of shock mounts). Its design remains the same as for the FCC4, excepting the absence of handling points on the lower shell. The weight of the FCC3 is less than for the FCC4.

3.1 General characteristics

The FCC3 packaging is generally made up of:

- *An horizontal cylinder* comprising two half-shells, linked by flanges in a diametric plane;
- *a steel cradle* consisting of two stringers suspended, by means of shock mounts, from the lower half-shell;
- *An internal equipment system* resting on the cradle and designed to accommodate one of the contents described in Section 2. For easier loading, it can swivel relative to the cradle to reach vertical position (Figure 3.1.3).

This packaging is shown schematically in Figures 3.1.1 and 3.1.2.

The FCC3 packaging design comes in 2 versions, so that its internal geometry can be adapted to the geometry of the contents.

- Version 1: FCC3 for 15x15, 17x17 assemblies and for 12 ft rod channels (Appendix 1 and 2),
- Version 2: FCC3 for 14x14 assemblies (Appendix 3).

These differences do not significantly affect the above description nor, under any circumstances, the Components classified Important for Safety (see chapter 6).

3.2 Outline dimensions and weight

Overall dimensions:

Length : 4923 ± 8 mm
Width : 1141 ± 4 mm [1]
Height : 1213 ± 4 mm [1]

Weights (indicative values):

Empty packaging : 2800 ± 100,150 daN
Loaded packaging : 4200 ± 100 daN [2] [3]

[1] outer diameter of the bare cylinder (without reinforcements or accessories other than the linings) : 1049mm.

[2] loading weight bounding all types of assembly and fuel rod transportation channels

[3] In calculations demonstrating the compliance of the model with the regulatory requirements, a maximum loading weight of 4400 daN shall be considered..

FRAMATOME ANP – Nuclear Fuel – Design and Sales Division

3.3 Description of the sub-assemblies

Details of the sub-assemblies and associated parts lists are given in appendices 1, 2 and 3. For each assembly, these parts lists give all the packaging components, some of which have been identified as Important for Safety in chapter 6. The important components are grouped together in drawings specific to each of the packagings, called "Safety Drawings".

3.3.1 Lower shell

It forms the base of the packaging and is made up of the following components:

- 2 steel plates, 3 mm thick, in the shape of a half-cylinder and butt-welded,
- 2 steel plate ends, 4 mm thick,
- Reinforcements in the form of 6 radial angle bars joined to 8 vertical gusset plates and flats 6 mm thick,
- 2 stringers braced by "U" sections and angle bars which enable the cylinder to rest on the ground on 4 metal skids and to be handleable by fork lift truck,
- 2 folded plates, 5 mm thick, forming the supports of the shock mounts which link the internal equipment system to the shell,
- A special angle bar (flange) joining the lower shell to the upper shell by means of 30 bolts,
- Stabilizing pads increasing the shell stability when the frame is in a vertical position (Figure 3.1.3).

3.3.2 Upper shell

It forms the packaging cover and is made up of the following components:

- 2 steel plates, 3 mm thick, in the shape of a half-cylinder and butt-welded,
- 2 steel plate ends, 4 mm thick, to which two axial shock absorbers are attached,
- Reinforcements in the form of radial angle bars joined to plates 5 mm thick,
- An angle bar acting as a connecting flange between the lower shell and the upper shell.

This shell is equipped with 4 storage stands each fitted with an upper shell and packaging handling point. The upper faces of these stands are equipped with centring pins for stacking.

3.3.3 Cradle

It supports the frame when the latter is in horizontal position. It is made up of the following components:

- 2 stringers and 7 cross-pieces connected to the lower shell by 22 shock mounts,
- A pivoting support leg locking the frame in its vertical position.
- A bottom side end featuring 2 bearing supports designed to accommodate the pivots for tilting the frame,
- 14 yokes for the clevis pins of the eye swing bolts for securing the frame to the cradle.

FRAMATOME ANP – Nuclear Fuel – Design and Sales Division

3.3.4 Internal system – frame and doors

It is made up of the following components:

- A rigid reverse "T" structure for accommodating the assemblies. The boiler works part of the frame contains neutron-absorbing resin.
- A bottom plate screwed to the frame and supporting the fuel assemblies at the time of the loadings and unloadings when the frame is in vertical position,
- A two-part top plate for closing off the cavities and wedging the assemblies at the other end,
- 2 "L"-shaped doors containing neutron-absorbing resin. These doors swivel on hinge pins joined to the frame and close to seal off the fuel assemblies.

The internal equipment system therefore leaves space for two cavities for housing the assemblies and/or fuel rod channels. These cavities, referred to as the **"neutronic cavity"**, have a section exactly fitting the contents.

Note: these cavities are protected from bursting due to possible temperature rise by the presence of vent holes, positioned in accordance with the safety drawings 229 K 0102, 229 K 0202 and 229 K 0302, and whose operating guarantee is furnished in the document reference [14].

A distinction is drawn between two cavity sections which determine the two FCC3 packaging versions mentioned in the introduction:

- **219x219 section for 15x15, 17x17 assemblies and 12 ft rod channels: Version 1,**
- **202x202 section for 14x14 - 8 et 10 ft assemblies: Version 2.**

Each internal equipment system bears an indication allowing the type of version to be identified.

Through this design, the internal equipment system fulfils the following functions:

- **confinement** of the fuel rods within a volume whose section is maintained. This is achieved by means of the frame, doors and end plates and enables the package to be kept in sub-critical state,
- **limitation of neutronic interactions** between the two assemblies or between packages, through the absorbing action of the resin contained in the doors and frame.

Figure 3.1.1
FCC3 packaging – Overview with container closed

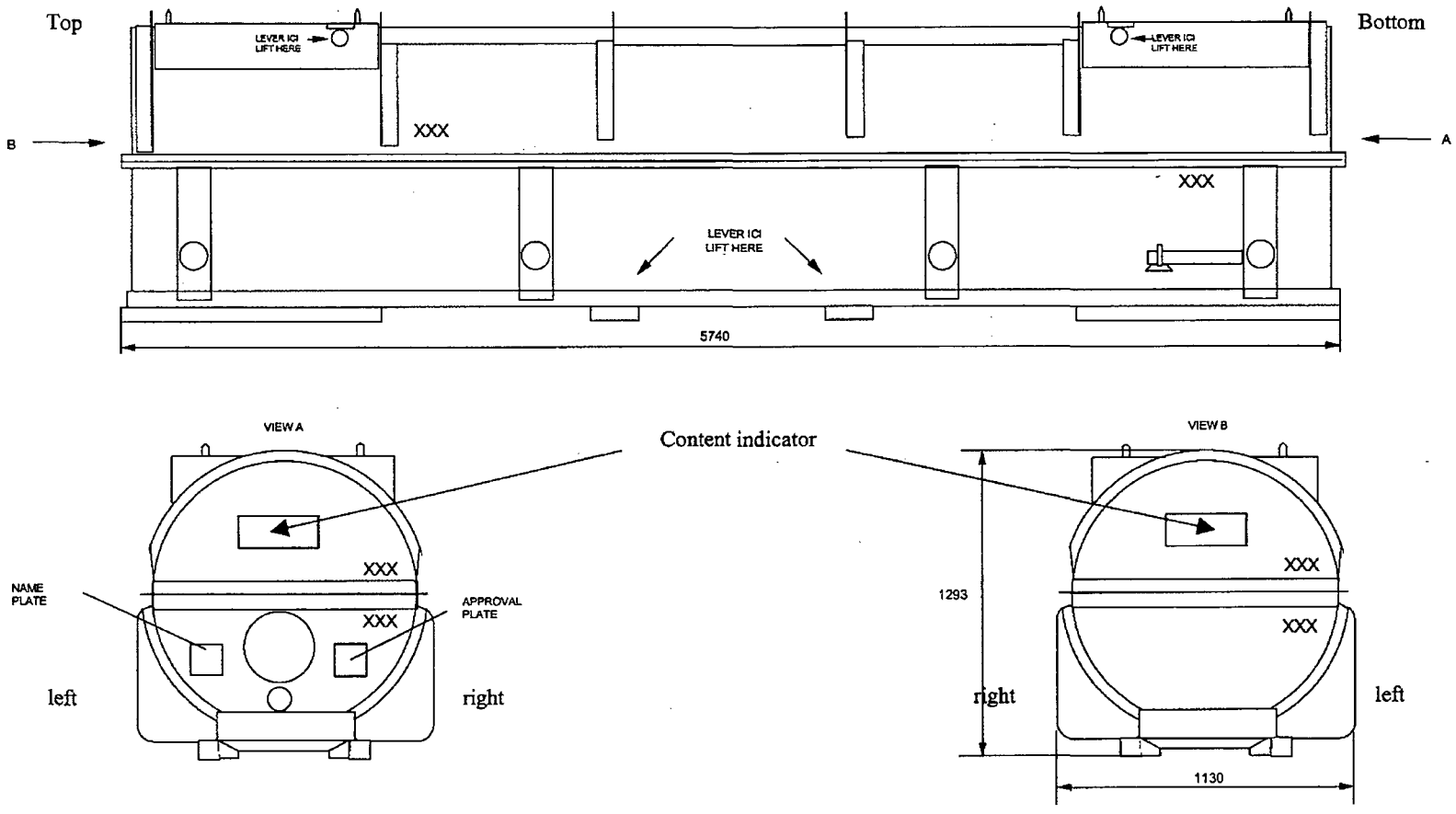

Figure 3.1.2
FCC3 packaging – Arrangement of assemblies

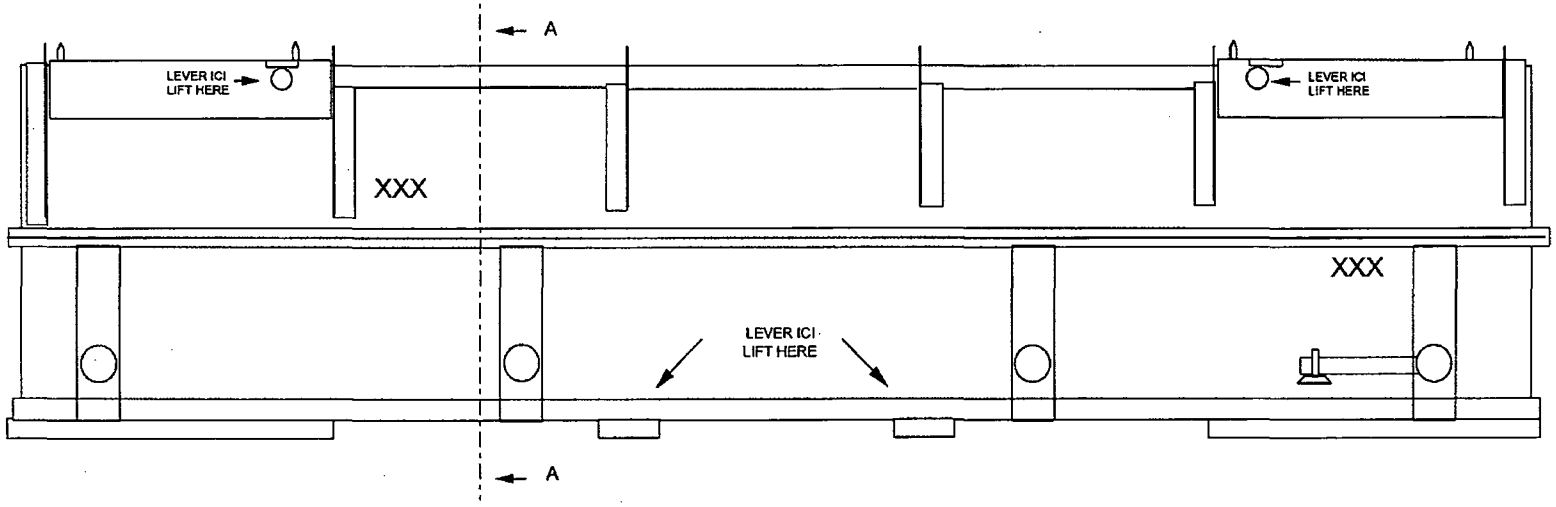

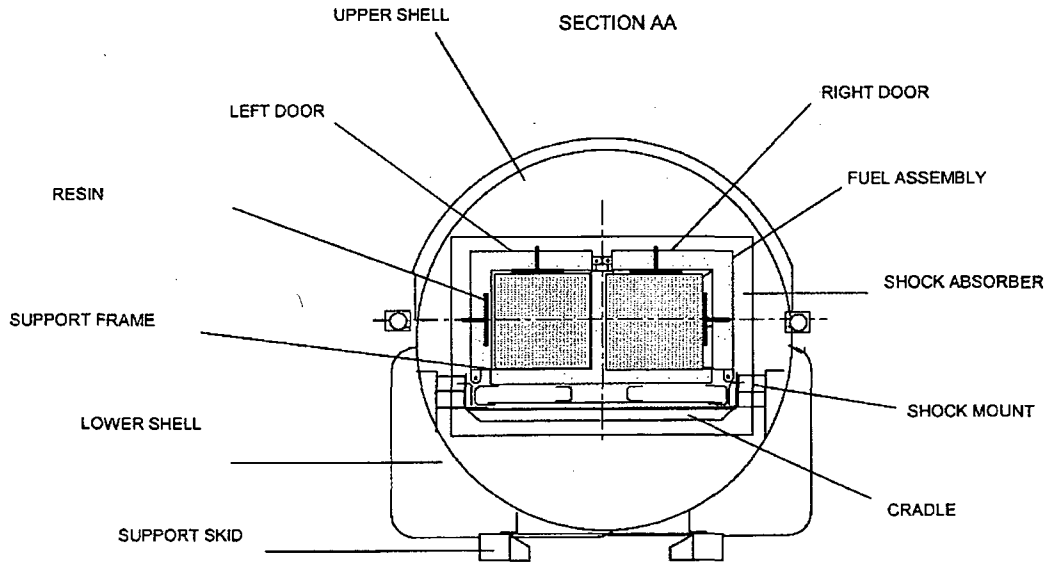

Figure 3.1.3 FCC3 packaging – General view with container open, support frame in vertical position

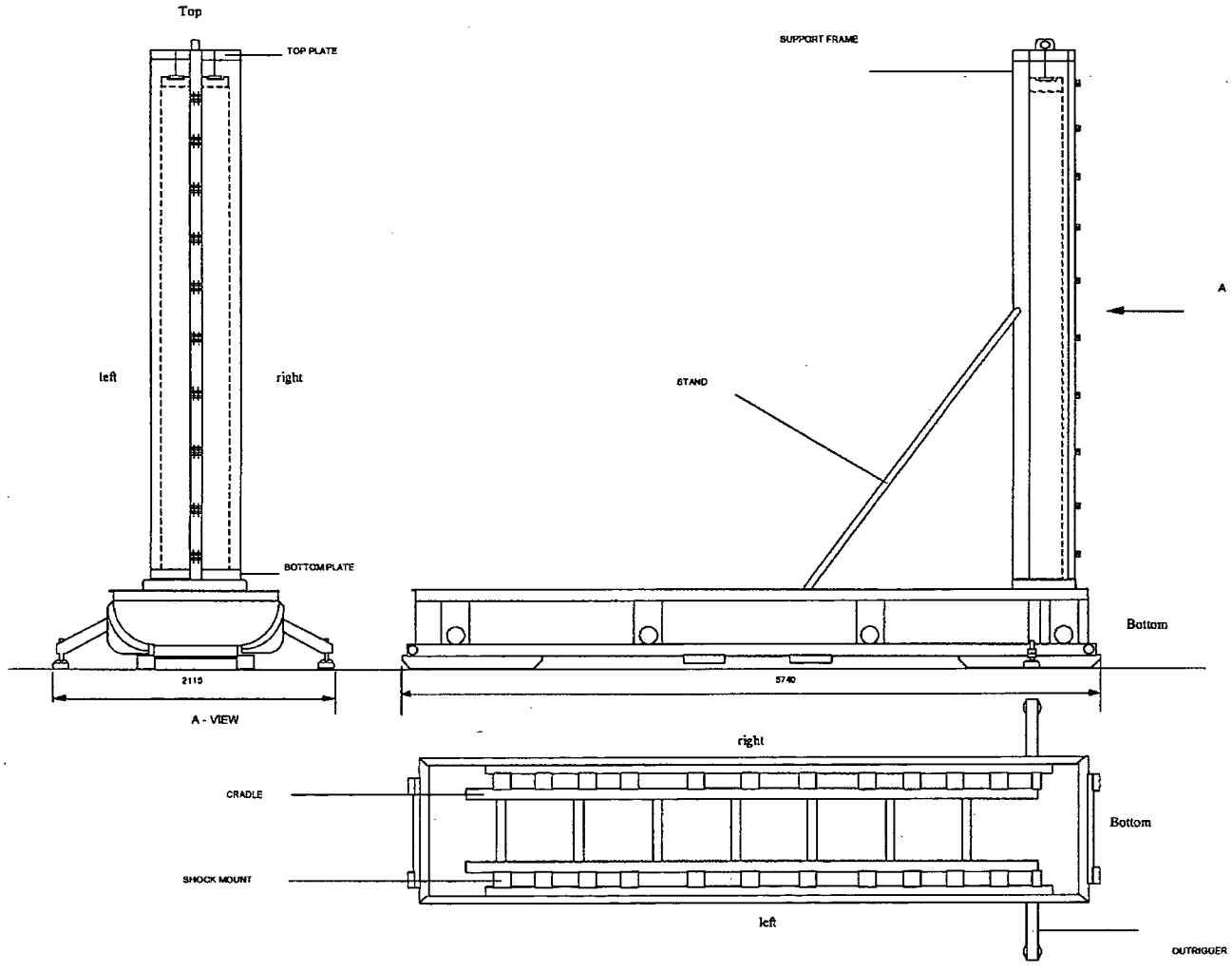

FRAMATOME ANP – Nuclear Fuel – Design and Sales Division

3.4 Weights specification

When calculating the compliance of the model with regulatory requirements, a conservative margin is added to the weight values given to the packaging and its components.

In order to comply with the regulatory requirements demonstrated in this report, the maximum full weight of the loaded packaging shall not exceed 4300 daN.

3.5 Material specifications

The numerical values in Table 3.5 are the values guaranteed by the AFNOR standards in force. The containers will be built in accordance with the standards in force at the time of their fabrication.

Note also that the specified AFNOR grades may be replaced by grades with mechanical properties at least equivalent. For each steel grade used in the fabrication of the Components Important for Safety, it is verified that there is no brittle fracture at -40 °C.

The whole of the door-frame assembly is made of austenitic stainless steel. Toughness at low temperature is an intrinsic characteristic of this material. No further guarantee is needed for this structure.

For screws of quality grade 10.9, the material grade is chosen from those proposed in standard NF A 35.557 [8].

Further, the bolting procurement requirements will include the guarantee of a toughness value at -40°C through specific product tests, as per NF EN 10113-1 [13].

The main building materials for the packaging components are listed in Table 3.4. Unless otherwise stated, characteristics are given for a temperature range of [-40 °C; +38 °C].

FRAMATOME ANP – Nuclear Fuel – Design and Sales Division

Table 3.5
Properties of the FCC3 packaging

Materials	Components and properties			
Steels S355 J0 and S355 K2G3 (E36.3 and 4.)	Thickness (mm)	3 ≤ e ≤ 16	16 ≤ e ≤ 40	40 ≤ e ≤ 60
	Rm MPa	490 to 630		
	Re MPa	355	345	335
	A %	22		21
	Rupture energy KV (J):	27 J in quality grade 3 40 J in quality grade 4 No brittle fracture at -40 °C		
	Young's modulus Poisson's ratio	204 000 MPa 0.28		
	It is used in grade 3 for most of the plates and structures of the upper and lower shells, together with the stringers and cross-pieces of the cradle. It is also used in grade 4 for the closure flanges of the lower shell. It complies with NF EN 10025 [2]			
Stainless steels or similar grade X2 CrNi 1809 (austenitic type) (Z3 CN 19-09) X4 CrNiMo 16-5-1 (Z6 CND 16-05-01)	They comply with NF EN 10088-3 [12]. This steel grade is used for the internal equipment system structure Rm = 490 MPa and Re = 205 MPa This steel is unaffected by low temperatures. This steel grade is used for the connecting pins Rm = 900 MPa, Re = 700 MPa and KV > 28 J at – 40°C. and for ball locking pins Rm = 1200 MPa et Re = 900 MPa and KV > 28 J at – 40°C.			
Bolting (type) 42 CD 4 STAINLESS STEEL A 4-80	The screws used are at least class 10.9 for: - all the internal equipment system screws, including the attachment of the bottom cross-pieces to the support frame, - The nuts of the "special head" screws joining together the two shells are class 10. These screws are made non-corrodible by various surface treatments. They comply with NF A 35-557 [8]. Rp 0.2 = 950 MPa A % = 8 % KCV = 3.5 daJ/cm^2 at -40 °C - For the frame-bottom plate connection , Rm = 800 Mpa, M20			
Resin	The neutron-absorbing resin contained in the doors and frame is a polymer resin [9] Density: between 1.6 and 1.79 Thermal conductivity: < 0.75 W/mK at 160 °C Heat capacity: > 1.45 J/g°C at 160°C Chemical composition: H: 4.65% O: 45.5% C: 27.9% Al: 15.5% B: 2.1% Zn: 4.25% Si: 0.05% Mg: 0.05%			
Shock absorbers	The axial shock absorbers consist of a stainless steel enclosure containing balsa wood. Density: 150 g/l Moisture rate: 10 % Crush stress: 12 MPa			
Coating	A "corrosion inhibitor + paint" coating is applied to all the upper and lower shells (inside and outside).			
Rubber	Shock mounts and gasket between the two shells			

FRAMATOME ANP – Nuclear Fuel – Design and Sales Division

4. PROVISIONS AND INSPECTIONS FOR TRANSPORT

4.1 Article 501: requirements applicable before first shipment

4.1.1 Definition of the containment envelope

In the FCC3 packaging design, the fissile material confinement is provided by the fuel rod cladding and the zirconium alloy welded end plugs.

The internal equipment system provides mechanical protection under normal and accident conditions. The mechanical tests on the package have shown that no rod in the assembly can break under accident transport conditions.

The checks carried out after fabrication and before the first dispatch aim to guarantee that fissile material confinement is ensured.

4.1.2 Definition of the isolation system

The isolation system of the packaging is provided by the frame, itself made up of the following components:

- Internal system: frame, doors and end plates, along with the longitudinal and axial wedging system for rod channels, forming together two neutron cavities. Regulatory drop tests and thermal tests (cf Appendix 11 and 15) show no modification of its geometry in TAC. The internal equipment system ensures the following functions:
    - limitation of neutron interaction between fuel assemblies or rod channels and between packages.
    - control of fissile material moderation contained in the neutronic cavity through its limited volume
- The neutron-absorbing resin placed in the doors and frame. Its characteristics are given in Table 3.5. Following the regulatory thermal test the resin still retains its absorbent quality and its thickness to guarantee the subcriticality of the array of packages in accident conditions (Appendix 12)
- The lower and upper shells: ensure the internal equipment system protection in TAC and TNC. Following regulatory drop tests (Appendix 11), both half-shells remain attached together and show only a very slight deformation. They help limit interactions between the packages by maintaining the neutronic cavities within their given volume.

Detailed drawings of these components are given in Appendix 1 and 2, and their minimum characteristics are listed in Appendix 12.

The isolation system of the fissile material is ensured by:

- a maximum ^{235}U enrichment limited to 5% (4.5% for 16x16 and 18x18 ft.),
- the cladding tubes: ensuring the fissile material containment in accident conditions,
- for transportation of fuel assemblies:
  - the fuel assembly structure (grids and nozzles) which outlines and limits the volume occupied by the fissile material. Regulatory drop tests results show a general compaction of the array following a drop, with the exception of a possible expansion at the top level of the grid (if vertical drop).
  - The fully structured assemblies: missing fissile rods are replaced with inert rods.

The minimal characteristics of fissile material constituents are given in Appendix 11.

Last, the isolation system is also defined by the number of packages N to be shipped together. This number N, varying in accordance with the content of the packages, is given in Appendix 12.

4.1.3 Neutronic and thermal protection

The internal equipment system is designed to limit neutron interaction between assemblies. This is provided mainly by the use of a polymer resin.

This resin also makes it possible to protect the containment system from the effects of the temperatures prevailing under accident shipment conditions.

4.1.4 Inspection prior to first shipment

The checks carried out during fabrication ensure that the packaging structural components making up the isolation system comply with those of the approved model (cf. 7.2).

The required resin performance characteristics are obtained:

- During fabrication, by checking the application of qualified processes,
- At end of fabrication, by analyses on test samples taken simultaneously.

Before the first shipment, (and before each subsequent shipment, cf. § 5.2), a final check of the conformance of shipped products with the approved content, with special attention to the fuel rod claddings and their welded nozzles, ensures that the containment envelope complies with the approved package type.

The rod claddings internal protection system in shipment accident conditions, along with the checks made during the fabrication process of the packaging, also guarantee the safe containment of the fissile material during transportation.

FRAMATOME ANP – Nuclear Fuel – Design and Sales Division

FRAMATOME ANP – Nuclear Fuel – Design and Sales Division

4.2 Article 502: requirements applicable before each shipment

The FCC3 packaging allows the transportation of fresh fuel assemblies or non-assembled fuel rods under regulatory security conditions. It was designed so that it can be easily used.

A broad outline of the operations is given in the following paragraphs. In operation, they are covered by precise, detailed operating procedures. These instructions oblige the operators to report any difficulty encountered in their enforcement.

4.2.1 Content inspection

Compliance of shipped products:

- Product inspection (type of assembly or non-assembled rods, enrichment).
- Suitability of the packaging and the content to be transported.

4.2.2 Packaging inspection

- Check packaging validity date with respect to the periodic inspections referred to in § 8.2.

4.2.3 Inspections during loading

During and after loading of the assemblies or rod channels:

- Check on the set-up and locking of all the ball locking pins (Components Important for Safety).
- Check on the wedging of the rods in the channel.
- Check on the wedging of the assemblies and/or channels.
- Check on internal contamination.

On the closed package:

- Check on proper lid positioning and tightening of all the bolts (Components Important for Safety).
- Check that the "Radioactive" and "Fissile" labels are affixed.
- Check on radiation intensity at contact and 1 m away, and on surface contamination.

Loading of packages:

- Position of the packages on the platform, as per the drawings.
- Stowing and lashing of the packages (Appendix 9).

4.3 Requirements and inspections for contamination and leakage

Compliance is with the requirements in articles 512 and 513.

For the case where loose or fixed radioactive contamination exceeds the maximum acceptable values as specified in article 508 of the Rules [1], the packaging will be handed over for decontamination to the specialized department.

4.4 Requirements for the transportation of LSA materials in industrial packages

Radioactive fissile materials are classified as LSA II according to [1] for the transportation of ENU (§ 2.4.1) and REPU (§ 2.4.2) assemblies.

FRAMATOME ANP – Nuclear Fuel – Design and Sales Division

The transportation of the FCC3 packagings is performed subject to "exclusive use", as defined in article 221 of the Regulation [1].

The package is defined as a Type 2 fissile Industrial Package (CI-2).

4.5 Determination of Transport Indices

4.5.1 Transport index for inspection of radiation exposure

Radiological inspection measurements are taken prior to any shipment to enable the transport index to be calculated.

As an example, radiation measurements on an FCC3 container equipped with a door placed in front of a 14x14 REPU assembly enriched 4.25% in U235 give at a distance of 50 cm a maximum radiation value of 12 µSv/h (Appendix 16). A radiation intensity at 1 m of 12/2 µSv/h (6 µSv/h) is deduced, in other words a transport index for the radiation exposure inspection TI = 0.6 (as per article 526).

These values are very conservative, keeping in mind the high enrichment of the assembly and the test conditions (measurements taken in the fuel assembly storage bay). They nevertheless remain well within the thresholds indicated in article 566 [1] for transportation.

4.5.2 Determination of the Criticality Safety Index

The criticality safety index is calculated as per articles 528 and 529 of Regulation [1], in the criticality notes in Appendix 12.

Depending on the type of assembly, the number N of packages taken into account pursuant to articles 681 and 682 varies. From this number N of packages calculated in the criticality studies, the value of the criticality safety index (CSI) is determined by the formula CSI = 50 / N.

Table 4.5.2
Criticality Safety Index of the FCC3 packaging

Content		Nb of packages	CSI
Non-assembled rods all types		infinite	0
Assembly(*)	14x14 (8 and 10 ft)	Infinite	0
	15x15	80	0,63
	17x17	80	0,63

(*) In the case of a mixed rod/17x17 XL/XLR assembly loading, the assemblies are considered to be non-assembled rods for the purposes of determining the criticality safety index.

FRAMATOME ANP – Nuclear Fuel – Design and Sales Division

4.6 Determination of the package category

As determined in § 2.4, the FCC3 packaging is designed and fabricated for the exclusive shipment of LSA radioactive fissile materials (LSA II according to [1] for ENU and REPU).

Radiological inspection measurements are taken prior to any shipment to enable the transport index to be calculated.

When a package is loaded to its capacity, the maximum radiation intensity at any point on its outer surface is in the order of:

- 20 µSv/h for ENU-based assemblies (5%),
- 28 µSv/h for REPU-based assemblies (4.25%) - Appendix 16.

The package category is determined from the Transport Index (TI - § 4.5.1) and the measured maximum radiation intensity. The tables in article 533, reproduced in Table 4.6, indicate the package categories according to these parameters.

Table 4.6
Package category

Transport Index	Maximum radiation intensity at any point on the outer surface	Category
0[1]	Not more than 0.005 mSV/h	**I-WHITE**
More than 0 but not more than 1	More than 0.005 mSV/h but not more than 0.5 mSV/h	**II-YELLOW**
More than 1 but no more than 10	More than 0.5 mSV/h but not more than 2 mSV/h	**III-YELLOW**
More than 10	More than 2 mSV/h but less than 10 mSV/h	**III-YELLOW**[2]

[1] If the measured TI is no greater than 0.05, its value may be reduced to zero in accordance with line c) of article 526.

[2] The packages belonging to this category must be transported under "exclusive use".

FRAMATOME ANP – Nuclear Fuel – Design and Sales Division

4.7 Marking and labelling

Marking and labelling meet AIEA Regulation requirements - 1996 [1].

4.7.1 Marking

In accordance with article 536 of the Regulation [1], the container bears on the outer face of the lower shell, on the bottom side, a stainless steel plate fixed to the packaging. This "approval plate" bears legibly and durably the following markings:

CONTENEUR POUR COMBUSTIBLE NUCLEAIRE NEUF UO_2

FRESH UO_2 NUCLEAR FUEL SHIPPING CONTAINER

N° d'agrément :
Approval N°

N° de série :
Serial N°

Masse brute :
Gross weight

A second plate named "manufacturer plate", not required by [2], bears the following markings:

Masse à vide :
Tare weight

Masse brute :
Gross weight

Dimensions hors tout :
Overall dimensions

Propriétaire :
Owner

Constructeur :
Manufacturer

Année de construction :
Year of construction

N° de série :
Serial N°

FRAMATOME ANP – Nuclear Fuel – Design and Sales Division

4.7.2 Labelling

4.7.2.1 Loaded container

In accordance with article 543 [1], the loaded container bears a stainless steel plate at each end. The following wording is engraved on this plate:

- LOW SPECIFIC ACTIVITY RADIOACTIVE MATERIALS (LSA-II / LSA-III), FISSILE (article 535),
- N° ONU 3324 / (FAS-II) (article 535),
- EXPEDITEUR: FBFC ROMANS or DESSEL (Article 534),
- RADIOACTIVE MATERIALS OF LIMITED SPECIFIC ACTIVITY (LSA II) FISSILES,
- N° UN 3324
- SENDER: FBFC ROMANS or DESSEL.

The same plate bears the labels in Figures 2, 3 or 4 (categories I-WHITE, II-YELLOW and III-YELLOW) and 5 (label for the criticality safety index) as required by articles 541 and 544 [1]. These labels are filled in as follows:

Category label:

Content designation

- UO2 ENU solid X% U235, LSA II
- UO2 ENU solid X% U235, LSA II

Activity definition

The activity marked on the label is the activity measured prior to any transportation.

Transport index definition

It is noted down following the radiological inspection prior to any transportation.

As an example, this index would be 0.6 (see § 4.5.1) for the assembly in Appendix 16.

Label for the criticality safety index:

Definition of the criticality safety index

The CSI value as defined in the criticality study (Appendix 12) according to content is displayed on this label (see § 4.5.2).

4.7.2.2 Container empty

The container can be transported either:

As an excepted package:

If the conditions of article 520 [1] are met.

By conventional transportation:

If it is established that the internal and external contamination levels do not exceed the thresholds stated in article 214 [1].

In both cases, the container bears the single indication "EMPTY CONTAINER" at both ends. This wording appears by turning over the plate described in § 4.7.2.1, which guarantees compliance with article 554 [1].

In the case of transportation as an excepted package, the plate also bears the number ONU 2908 in accordance with [1].

4.8 Lashing

Lashing shall be performed in total security (article 564 of [1]). The calculations described in Appendix 6 show that the forces exerted at the package lashing points do not prevent it from meeting the regulatory requirements and that these points withstand the applied stresses.

The purpose of this calculation is not to demonstrate the performance of the lashing system, but to check the performance of the container lashing points. Accordingly, the calculation of the lashing points takes into account the ultimate tensile strength of the lashing systems, which is 5000 daN.

Results show that the maximum stress (function of the tensile force F exerted), taking friction into account, amounts to 19.1 daN/mm^2. If conservative calculations are made omitting friction stress, the maximum value is 25.0 daN/mm^2, which remains significantly lower than the yield strength of the material (35.5 daN/mm^2). This means the lashing system will break before the lashing point.

FRAMATOME ANP – Nuclear Fuel – Design and Sales Division

FRAMATOME ANP – Nuclear Fuel – Design and Sales Division

4.10 FCC3 packaging configurations per content

Table 4.9 groups the packaging layout variants per content.

Table 4.9
FCC3 packaging configurations

Content		Packaging
Assemblies	14x14 - 8 and 10 ft 14x14 - 8 and 10 ft + 16 rods maximum	FCC3 "Version 2"
	15x15 15x15 + 20 rods maximum	FCC3 "Version 1"
	17x17 - 12 ft 17x17 – 12 ft + 24 rods maximum	FCC3 "Version 1"
Rods	14x14 - 8 ft	FCC3 "Version 1" in "12 ft" type rod channels
	14x14 - 10 ft	
	15x15	
	17x17 - 12 ft	

FRAMATOME ANP – Nuclear Fuel – Design and Sales Division

5. ANALYSIS OF COMPLIANCE WITH REGULATORY REQUIREMENTS

5.1 General remarks

In accordance with articles 622 and 671 of the IAEA Regulation for shipment of radioactive materials, [1], the type 2 fissile industrial packages (CI-2) must be designed to meet the packaging requirements in the following articles of the said Regulation. These requirements are recalled hereunder:

Requirements	1996 edition
General requirements for packagings and packages	**606 to 616**
Particular requirements for type 2 industrial packages (CI-2)	**621 and 622**
Particular requirements for packages containing fissile materials	**671 to 682**

This chapter will demonstrate article by article the compliance with these requirements of the package design, made up of the FCC3 packaging and its radioactive content.

5.2 General requirements for packagings and packages

5.2.1 Article 606

The packaging shall be so designed that the package can be manipulated and transported easily and safely. Handling can be performed in normal security conditions by standard lifting machinery, by means of slings and hooks. Two lifting modes are possible:

- By means of the 4 lifting points welded on the upper shell, for the handling of the loaded or empty package and the lid alone during opening operations,
- By means of the truck fork openings provided under the lower shell.

The packaging is also designed to be suitably lashed during shipment by means of lifting points.

5.2.2 Article 607

The package shall be raised by the lifting points on the upper shell (Appendix 6).

The results of the lifting calculations demonstrate that the FCC3 packaging has been so designed that no lifting attachment fails when used in the intended manner. The package thus conforms to article 607 of Regulation [1].

FRAMATOME ANP – Nuclear Fuel – Design and Sales Division

5.2.3 Article 608

The package is raised by the lifting points on the upper shell.

The packaging does not have any other features on the outer surface liable to be used for lifting.

5.2.4 Article 609

The packaging is so designed and finished that its outer surface does not exhibit protuberances other than those formed by the lifting points, the reinforcing angle bars, the vessel flanges and the support skids.

The outer surfaces of the packaging are designed and finished so as to be easily decontaminated. They are simple in shape and painted with an enamel type coating. The FCC3 containers are also subjected to a programme of regular inspections and maintenance which ensures that the paint coating is in good condition.

5.2.5 Article 610

The outer enclosure of the packaging is cylindrical: its shape prevents water from collecting and being retained on the surface.

5.2.6 Article 611

No feature is added to the package at the time of transport.

5.2.7 Article 612

The effects of an acceleration, vibration or resonance which may arise under conditions which should be those of routine transport cannot detract from the effectiveness of the closing devices nor degrade the package as a whole.

Effectiveness of the closing devices:

- Hinge pins and locking pins are held axially by locking devices (balls, retaining rings).
- The torque of the bolts guarantees that they will not loosen during transport. They were sized to maintain a permanent tightening force.

Package integrity:

- The materials of the packaging and the quality of the welds shall be such as to withstand the loadings encountered during transport.

The experience built up with the RCCs confirms the effectiveness of this design.

5.2.8 Article 613

The materials of the packaging and all the internal components or structures were chosen to be physically and chemically compatible with each other and with the intended radioactive contents of the package.

The packaging materials (see. § 3.4) are not degraded by the radiation reaching them.

Furthermore, the materials which the packaging may contain are not susceptible to radiolytic decomposition. No corrosion phenomena are expected to occur.

The internal equipment system is exclusively stainless steel, which protects this section from the risks of corrosion. For the carbon steel parts (shell and cradle), the periodic inspection programme includes monitoring of the condition of the paint-coating, so as to detect and remedy incipient corrosion.

5.2.9 Article 614

The valve fixed on the lower shell is a pressure-relieving valve. It is protected by a bolted plate which prohibits any unauthorised manipulation.

5.2.10 Article 616

This article concerns radioactive materials having other dangerous properties, such as susceptibility to explosion, inflammability, pyrophoricity, chemical toxicity and corrosivity. It therefore does not apply to the package design constituted by the FCC3 and its contents.

5.3 Requirements for type 2 industrial packages

5.3.1 Article621

Article 621 renders applicable articles 606 to 616 and 634. Articles 606 to 616 were addressed here-above.

Regarding article 634, the smallest overall external dimension of the package is well above 10 cm (113 cm).

5.3.2 Article 622

In addition to compliance with article 621, Article 622 calls for evidence that if the package was subjected to the free drop and stacking tests alone (722 and 723), the result would not be:

- Loss or dispersal of the radioactive contents,
- Loss of shielding integrity leading to a 20 % increase in the radiation level at any point on the external surface.

As shown in § 5.5.3 below, in comparison with the FCC4 package, which adequately withstood the tests corresponding to the accident transport conditions (9 m drop and 1 m drop on bar), we can predict that the FCC3 package could undergo the tests corresponding to normal transport conditions without significant damage. These tests are much more conservative than the test corresponding to normal transport conditions (1.2 m free fall drop test).

The stacking case dealt with in § 5.5.2.3 shows that the package is not sensitive to this test.

The FCC3 package could therefore undergo these two tests without significant damage.

FRAMATOME ANP – Nuclear Fuel – Design and Sales Division

5.4 Requirements for packages transporting fissile materials

The FRAMATOME 12 ft "FCC3" package design is very similar to the 14 ft design or "FCC4". Their difference in terms of geometrical characteristics induces a lower mass for the FCC3. No additional tests were therefore run on the FCC3. Its presumed behaviour during the regulatory tests will be analysed by comparison with the results of the tests run in 1998 on the FCC4 package. For the criticality studies, the condition of the FCC3 package in normal and accident conditions will be considered the same as the condition of the FCC4 package on completion of these regulatory tests, with the exception of the geometrical characteristics, which will be those of the FCC3.

5.4.1 Article 672

The FCC3 packaging loaded with the content described in chapter 2 does not meet the requirements in article 672 of Regulation [1]. It is therefore subject to the requirements in articles 671 to 682 of Regulation [1] which apply expressly to fissile materials.

5.4.2 Article 671

The fissile materials are packaged and shipped so that sub-criticality is maintained in all the circumstances most frequently encountered in normal transport conditions and in case of accident.

The contingencies taken into consideration are indicated in the corresponding criticality studies given in Appendix 12 and below.

5.4.3 Article 675

The analysis in § 5.5.2 shows that the condition of the package upon completion of the regulatory tests for normal transport conditions (spray, free drop, stacking and penetration) is as follows:

- The package enclosure only sustains local deformations which do not modify the spacing conditions between packages,
- The condition and distribution of the contents inside the enclosure are unchanged,
- The packaging construction would prevent the entry of a 10 cm cube,
- The presence of water is not a critical parameter for the FCC3 packaging, since this is a hypothesis in the criticality studies.

The design of the FCC3 packaging is therefore such that the configuration of the contents and the vessel geometry have not undergone, following the tests for normal transport conditions, any modifications which could significantly raise reactivity.

This is why, in normal conditions, in the criticality studies (Appendix 12), the packaging is considered as a cylindrical shell whose internal length is determined from the length of the neutronic cavity. The enclosure keeps its internal diameter of 1,048 mm, the packaging length and the position of the assemblies in the neutronic cavity are also kept.

5.4.4 Article 676

The upper temperature limit (+38 °C) is acceptable for all the packaging materials (steels for the vessel and structural components, rubber for the shock mounts).

FRAMATOME ANP – Nuclear Fuel – Design and Sales Division

For the lower temperature limit (-40 °C), the internal equipment system features defined as safety components (see chapter 6) are all made from austenitic stainless steel. Only a few of the components are made from S355 J0 and S355 K2G3 Steels (E 36.3 or .4) (shells and cradle) for existing packaging series. The adoption of components with small thicknesses made of a grade of minimum quality 3 provides a decrease in the brittle failure risks at low temperatures. New shells for the package design will be built with structural materials performing satisfactorily at –40°C in terms of toughness.

It must also be noted that impact tests were performed at a temperature of -40° C on S355 J0 (E 36.3) steel specimens, sampled from « 12 ft » packagings. These tests showed that there was no brittle fracture (Appendix 10).

Further, partial degradation of the outer vessel can be considered as permissible, as it is the internal equipment system made of austenitic stainless steel, a material insensitive by design to low temperatures, which protects the fuel rods in normal and accident conditions. In addition, the containment enclosure is ensured by the fuel rods cladding made from zirconium alloy, whose properties are not altered at the maximum low temperature of -40°C (Appendix 10)

Regarding the bolts, standard NF A 25-100 [3] states that the fixings used in the FCC4 can be used in the temperature range -50 °C / +300 °C. Fixings of class 10.9, have been selected from those proposed in standard NF A 35-557 [8]. This standard [8] guarantees a KCV toughness value of 3.5 daJ/cm^2 at -20 °C. The toughness value at -40 °C shall be measured by tests. Procured materials will therefore be inspected to check the absence of brittle fracture at -40 °C.

5.4.5 :Articles 677, 678 and 679

The isolated package, damaged or undamaged, shall be sub-critical with total reflection by a 20 cm water layer around the confinement enclosure.

The modelling taken into account for normal and accident conditions is described in Appendix 12. More generally, the criticality studies show that the FCC3 packaging considered in isolation and loaded with the content described in chapter 2, is such that a critical state cannot be reached in any possible or foreseeable transport contingency (package damaged or undamaged).

FRAMATOME ANP – Nuclear Fuel – Design and Sales Division

5.4.6 Articles 681 and 682

Clustered packages shall be sub-critical, with the package array surrounded on all sides by a 20 cm layer of water.

In normal conditions, the configuration studied in the criticality studies is an infinite array (cylindrical model) of undamaged packages filled with water and with a void space between packages. In accident conditions, the array is composed of damaged packages (parallepiped model) whose modelling is described in Appendix 12.

The results of these calculations show that an infinite array of undamaged packages is always sub-critical. However, an array of damaged packages respects the sub-criticality margin, for a number N of packages dependent on the type of assembly transported (Appendix 12).

5.4.7 Article 568

The hypotheses for evaluating the sub-criticality in article 568 concern packages for which the transported fissile materials are either irradiated fissile materials or unspecified fissile materials (whose characteristics -composition, mass, concentration, ...- are unknown).

They are not therefore applicable to the package made up of an FCC3 packaging and the content defined in chapter 2.

FRAMATOME ANP – Nuclear Fuel – Design and Sales Division

FRAMATOME ANP – Nuclear Fuel – Design and Sales Division

5.5 Behaviour of the package design subjected to regulatory tests

5.5.1 Introduction

The specified regulatory tests are listed in the following table.

Regulatory tests	IAEA 1996 edition
Tests for proving capacity to withstand normal transport conditions	Articles 719 to 724
Tests for proving capacity to withstand accident transport conditions	Articles 726 to 729
Tests for proving the water tightness of the packages containing fissile materials	Articles 731 to 733

The packaging was designed to guarantee the sub-criticality of the package on completion of the regulatory tests, by maintaining confinement as defined in the criticality studies (see § 5.4 and Appendix 12). For the criticality studies, the condition of the FCC3 package in normal and accident conditions will be considered identical to the condition of the FCC4 package on completion of these regulatory tests.

5.5.2 Effects of the tests for proving capacity to withstand normal transport conditions

5.5.2.1 Article 721: Water spray test

The water tightness criterion is not applicable to the FCC3 packaging, as the model used for the criticality studies takes into account the presence of water around the assembly.

This test therefore has no effect on the later behaviour of the FCC3 packaging.

5.5.2.2 Article 722: Freefall drop test (1.2 m)

The packaging loaded with an assembly and test weight (of the same mass) underwent a test more severe than the one imposed in this article: 9 m drop see § 5.5.3.1.2. The packaging could therefore undergo the free drop test without significant damage.

FRAMATOME ANP – Nuclear Fuel – Design and Sales Division

5.5.2.3 Article 723: Stacking test

The package must be subjected for a minimum of 24 hours to a compression force equal to the higher of the two following values:

- Equivalent to 5 times the mass of the actual package,
- Equivalent of the product of 13 kPa by the vertical projection area of the package

The compression force to be considered is therefore F1 = 21600 daN (equivalent of 5 times the mass of the package), applied uniformly to the 4 bearing points of packages stacked for storage (support boxes).

The calculations describing the mechanical strength of the package are described in Appendix 8.

The loadings which would arise due to the stacking test may under no circumstances cause stresses higher than the yield strength in the package structures. It is therefore deduced that this FCC3 packaging withstands the stacking test without any problem.

Figure 5.5.2.3
Container stacking possibilities (storage and transportation)

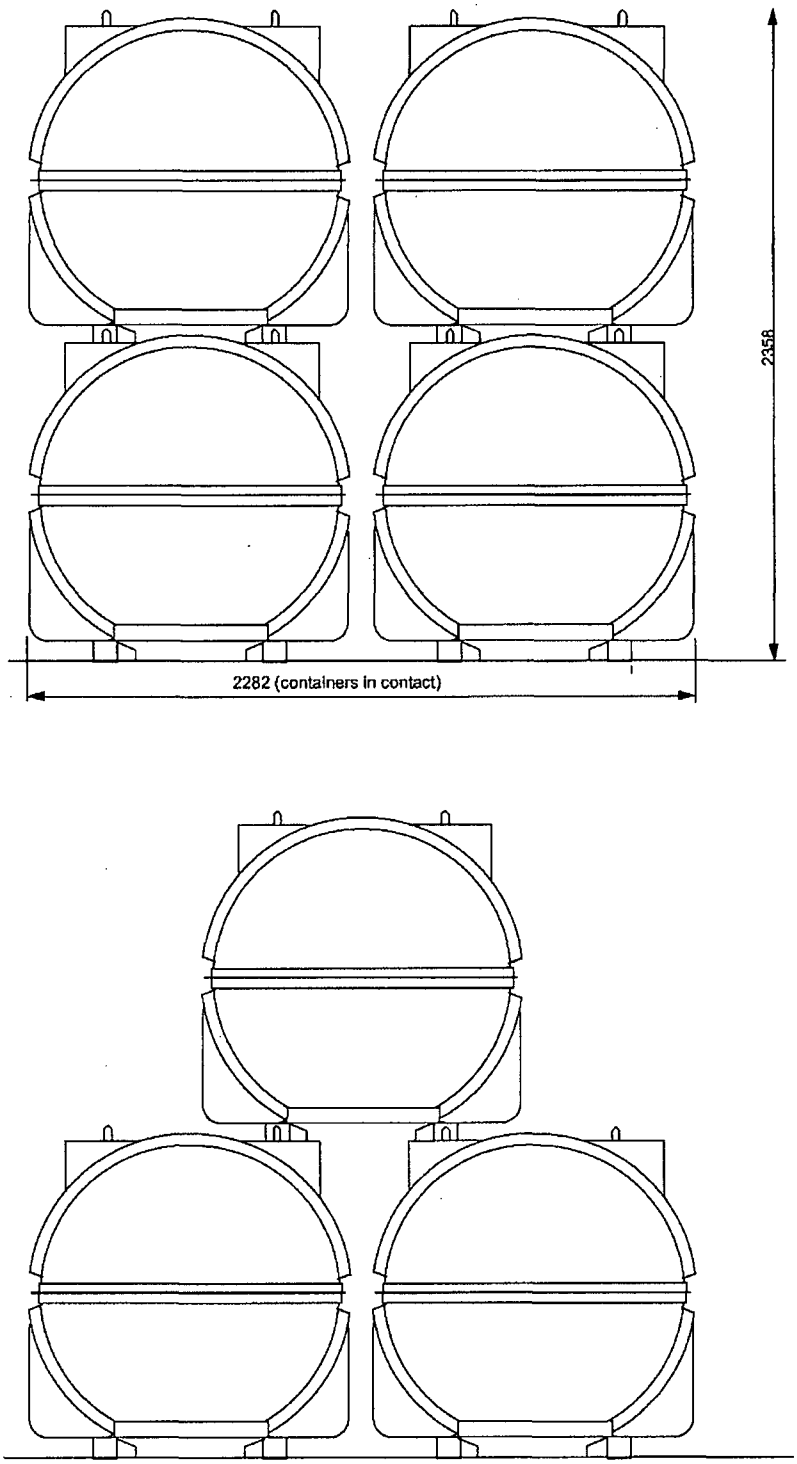

FRAMATOME ANP – Nuclear Fuel – Design and Sales Division

FRAMATOME ANP – Nuclear Fuel – Design and Sales Division

5.5.2.4 Article 724: Penetration test

The most fragile part of the package is the enclosure whose thickness is 3 mm. Dropping, from a height of 1 m, a bar 3.2 cm in diameter with a hemispherical end and a mass of 6 kg can leave only a shallow imprint. Under no circumstances should it perforate the enclosure, as shown by the following calculation:

The drop height is 1 m. As the bar weighs 6 daN, an energy of 6 daN.m must be absorbed at the moment of impact. The aim is therefore to evaluate the rupture energy of this wall.

The steel breaks in a circular line of length $\Pi.D$ bounding the bar of diameter D.

To cut a plate of thickness e, the force exerted on the cut edges of area $\Pi.D.e$ must move its point of application by a distance e.

So, if τ is the shear rupture stress of the steel, the rupture energy is given by: $E = \tau.\Pi.D.e^2$

With the following values:

P = 6 daN
h = 1 m drop height
D = 32 mm bar diameter
e = 3 mm min enclosure thickness
τ = 0.8.Rm = 39.2 daN/mm^2
(for a steel of grade S355 J0 (E 36.3): Rm mini = 49 daN/mm^2)

This gives a rupture energy E

$$E = \tau.\Pi.D.e^2 = 39.2 \times \Pi \times 32 \times 3^2 = 35.5.10^3 \text{ daN.mm} = 35.5 \text{ daN.m}$$

The energy to be absorbed at the moment of impact is only 6 daN.m, so there is no perforation of the enclosure.

Lastly, the package was designed to withstand the drop on bar test (see § 5.5.3.1.1), a test which is much more severe for the latter, which clearly demonstrates that the package can withstand this test without significant damage.

FRAMATOME ANP – Nuclear Fuel – Design and Sales Division

5.5.3 Cumulative effect of the tests for proving capacity to withstand accident transport conditions

5.5.3.1 Article 727: Mechanical tests

The compliance of the FCC3 packaging with the IAEA requirements [1] is demonstrated by subjecting a full-scale test specimen to the regulatory mechanical tests (article 701). This specimen shall, in all respects, conform with the series design and only differ from the latter in the components (considered insignificant) mentioned in Table 5.5.3.1.

The test was performed with a fuel assembly. The skeleton (inert supporting structure) and cladding of this assembly are made of zirconium alloy Zr4. Other zirconium alloy grades may be used. Report FF/DC/00924 (see Appendix 11), specifies the conditions in which the results obtained in the mechanical tests of this steel grade may be extended to any other zirconium alloy. It shows that the skeleton material is not significant and that regarding the cladding material:

Is deemed acceptable any material which meets the three criteria below:

- $Rp_{0.2\%} \geq 520$ MPa
- $\sigma_m \geq 710$ MPa
- total strain $\geq 8.3\%$

Is also deemed acceptable any material which meets the three criteria below:

- $Rp_{0.2\%} \geq 250$ MPa
- $\sigma_m \geq 400$ MPa
- total strain ≥ 9.5 %

Subject to verification of the conditions attached to cladding material, **Prototype n°2 is therefore representative of the package designs for which the approval is requested.**

FRAMATOME ANP – Nuclear Fuel – Design and Sales Division

Table 5.5.3.1: Representativity of the prototype n°2 container

Container prototype n°2	Series containers	Justification of representativity
Type of container: 14' - 17x17 XL/XLR + assembly 17x17XL	12' et 14' arrays and rod channels	Report TFX/DC/2104 and § 5.5.3.1.3
Position of grid pads adapted to 17x17 14'	Pad position adapted to each type of assemblies	On prototype n°2 pads 5 and 6 were deliberately off-centred from door frame for test purposes. The mechanical tests results prove that the rib/grid relative position has no effect on package behaviour.
Pad housing size 54x146	Pad housing size 17x17 XL and XLR : 93x146 16x16 and 18x18 : 54x162 17x17andt 15x15 x 12': 54x146 14x14 : continuous x129(width.)	The criticality analysis models the full scale housing and concludes that their filling with water is acceptable.
2 lateral outriggers	1 central support leg	No impact on safety related components
The assembly occupies the whole cavity	For assemblies 14x14, an adaptable length wedge must be placed on the bottom side	Differential slippage of rods covered in report TFJN/DC/1671 - Appendix 12
Frame handing lug welded on top rid	Handing lug inserted in rib and welded	No impact on safety related components
Door plates connection weld: edge-to-edge angle weld	Overlapping of plates as reinforcement to doors at this level	20 kg weight increase accounted for in safety margins used for specimens and calculations
Shell E 36 thickness 3 mm	Packaging 501 à 515: shell thickness2.4 mm	Report TFX/DC/2104
Blocking of swivelling pin by Mecanindus locking pin	Beta locking pin for16x16 and 18x18 designs	No impact on safety related components
End supports for assembly 17x17	16x16 eand18x18 - different top and bottom supports	No impact on safety related components
No spring-loaded ejector on connecting pins between doors and bottom plates	4 spring-loaded ejectors M8 to hold swivelling hinges in open position	No impact on safety related components
Grid and head clamping system - stainless steel Z2 pads and Z6 screws	Change of material to improve long-term performance	No impact on safety related components
Closure of doors by 10 locking pins	Closure of doors by 9 locking pins for 16x16 and 18x18	Report TFX/DC/2104
Ball locking pin for door closure length 100 mm	Ball locking pin length 60 mm	A length allowance (40 mm) beyond the ball had been provided to prevent large frame bowing from causing the pins to drop out ; tests showed that 60 mm lock pins are sufficient to hold doors in place.

FRAMATOME ANP – Nuclear Fuel – Design and Sales Division

The regulatory test was run in September 1998 on an FCC4 package design. The test report in Appendix 11 describes the configurations and results of these mechanical tests, whose main results are discussed below.

5.5.3.1.1 Drops on bar

The FCC4 packaging loaded with depleted uranium and a test weight underwent two successive drops from a height of 1 m onto a solid vertical steel bar of circular section 15 cm in diameter and 1.2 m in length.

For the first drop, as indicated in Figure 5.5.3.1.1a, the packaging axis made an angle of 0° with horizontal and the angle between the mating surface of the shells and vertical was 29° in order to impact one of the locking devices of the door containing the assembly.

Perforation of the upper enclosure 150 mm in width and 200 mm in height was observed on the top side.

Through the openings in the shell, the main observations were as follows:

- Depression on the door plate, but no tearing,
- The lock pins of the doors closest to the doors were intact.

The neutronic cavity remained undamaged.

For the second drop, as shown in Figure 5.5.3.1.1b, the packaging axis made an angle of 15° with horizontal and the angle between the mating surface of the shells and vertical was 49° in order to impact the top side of the door containing the assembly.

On the other side of the upper shell, the second drop caused a perforation of 450 mm in height on an opening 335 mm by 150 mm.

Through the openings in the shell, the following were observed:

- Depression on the upper door plate over a zone of 500 mm,
- Tearing of the door upper plate along two axes,
- The cradle-frame connection damaged but still in place.

This combination of the two drops on bar at the same point of impact represents a very severe test for the packaging. Expert assessment of the assembly after opening up the container did not reveal any rod rupture, but did show settling of the array and permanent deformation of the assembly between grids 5 and 6 to a depth of 12 mm. The presence of resin between the two walls dampened the shock and spread the load transmitted by the bar to the whole door width.

5.5.3.1.2 9 m drop

After these two drops, the package was dropped from a height of 9 m (Figure 5.5.3.1.2). The configuration selected was a flat drop with a longitudinal incidence 15.2° and an azimuthal angle of 180° (upper enclosure directed towards the target).

After turning the packaging over, it could be seen that:

- the container was no longer cylindrical at the two ends,
- all the bolts joining the 2 half-shells were still in place.

FRAMATOME ANP – Nuclear Fuel – Design and Sales Division

Expert assessment of the packaging yielded the following results:

- Indentation of the upper shell,
- The shock absorbers were undamaged and in place,
- The support frame and cradle were completely pulled apart, but the internal equipment system still supported the neutronic cavity,
- 30 mm bowing of the frame-door assembly with respect to the horizontal plane, no vertical bowing,
- Depression on the upper face of both doors was observable on the top side. This 19 mm depression corresponds to the impact of the stiffening angle bar of the higher-rigidity upper shell. In this zone, cracking of the weld of the connection between the upper and lower plates could be observed on the door containing the test weight.

5.5.3.1.3 Conclusion from the mechanical tests

The condition of the FCC4 packaging on completion of these three drops was as follows:

- The two shells were still connected,
- The shock absorbers were still in place and undamaged,
- The relative positions and spacing of the assemblies within the packaging were unchanged,
- No rod failure was observed on completion of these mechanical tests,
- The two successive drop on bar tests at the same point of impact caused perforation of the enclosure and tears in the doors, but the door bolts stood up very well to the shocks imposed by these two drops and continue to fulfil their restraining function,
- The internal equipment system continued to ensure a nuclear safe configuration and ensured the housing geometry was preserved,
- The section of the cavity was reduced overall and the locally observed maximum values nowhere exceeded the values of the criticality studies,
- The resin thickness and characteristics were unchanged.

The presence of a rod channel in place of a fuel assembly makes no visible change to the behaviour for two reasons:

- the weight of the loaded channel is, at most, equal to that of the assembly,
- The rigidity of a door is higher than that of a channel.

The second point is demonstrated by comparing the rigidity of one of the components in the cavity with that of the channel.

The channel is made of a U -shaped sheet 5 mm thick reinforced with two square tubes 15x15x1.5. The channel bending inertia is lower than 10^7 mm^4.

For comparison purposes, the bending inertia of the frame alone is 116×10^6 mm^4. The calculation considers neither the resin within the frame nor the presence of other components such as doors which will provide some structural rigidity and displace the neutral fibre close to the channel neutral fibre.

It is shown that the replacement of a fuel assembly by a rod channel does not modify the neutron cavity behaviour whatsoever.

FRAMATOME ANP – Nuclear Fuel – Design and Sales Division

The combination of the tests for normal transport conditions and the mechanical tests corresponding to accident transport conditions therefore causes modifications in the package geometry and in the position of its content inside the enclosure. These modifications are compatible with the hypotheses taken in the criticality studies (refer to § 5.4 and Appendix 12).

5.5.3.2 Article 728: Thermal test

The thermal performance of the packaging is evaluated by calculation (Appendix 14).

On completion of the fire test phase, the assessment of the thermo mechanical behaviour of the fuel rods shows that in the grid-to-grid section, no rod seems liable to a cladding failure. In the void volume, temperatures are higher, and two rods are susceptible to cladding failure.

However, a possible cladding failure in a void volume would not occur opposite the pellet stack. Furthermore, it would lead to a release of the internal pressure, therefore reducing even more the risk of pellets being ejected.

Lastly, fuel pellets ejection tests [11] show that even in the grid-to-grid section, cladding failures do not lead to the ejection of fuel pellets. Cladding failure is ductile and therefore very localized.

All the above confirm that there is no risk of fuel pellet ejection.

Remark: among the zirconium alloy grades available, the most conservative case is that of claddings made from Zr4. Therefore these conclusions may be considered as applicable to any zirconium alloy with burst strength characteristics higher than those of Zr4 (presented in Appendix 14).

In conclusion, when reviewing the consequences of the failure of two rods on the overall reactivity of a package in accident transport conditions, we can confirm that:

- The two rods at risk are positioned side by side in the upper corner of the neutron cavity. The assumed ejection of their pellets content does not improve the moderation of the whole assembly.
- Considering from a very conservative aspect the increased moderation ratio of the whole assembly corresponding to the ejection of the fuel pellets from 2 rods, the resulting reactivity variation will not have any significant impact on the package safety (Appendix 12)

On completion of the thermal test, the results show no criticality risk for the package.

5.5.3.3 Article 729: Water immersion test

The water tightness criterion is not applicable to the FCC3 packaging, as the model used for the criticality studies takes into account the presence of water around the assembly.

Water tightness is also provided by the containment system formed by the fuel rod cladding and the welded end plugs. The pressure on the internal equipment system could under no circumstances inflict damage on the rods, in comparison with the effects of the two drops on bar.

This test is therefore not applicable for the FCC3 packaging.

5.5.4 Water leakage test for packages containing fissile materials

This test relates to articles 731 to 733.

Judging by the results of § 5.5.3, the water tightness of the enclosure will be affected by the tests simulating accidents during transportation. Water inleakage during immersion is therefore expected. The presence of water will therefore be considered for the criticality study of § 5.4 and Appendix 12.

In accordance with article 631 of the Regulation, the FCC3 packaging will be excepted from this test as the in-leakage or out-leakage causing the largest reactivity is assumed for criticality evaluation purposes.

5.5.5 Conclusions of the regulatory tests

The tests for accident transport conditions led to modifications in package geometry. These modifications are easily covered by the hypotheses taken into account in the criticality studies (see § 5.4 and Appendix 12).

FRAMATOME ANP – Nuclear Fuel – Design and Sales Division

Figure 5.5.3.1.1a
Drop test – Accident conditions of transport – Drop on bar N°1

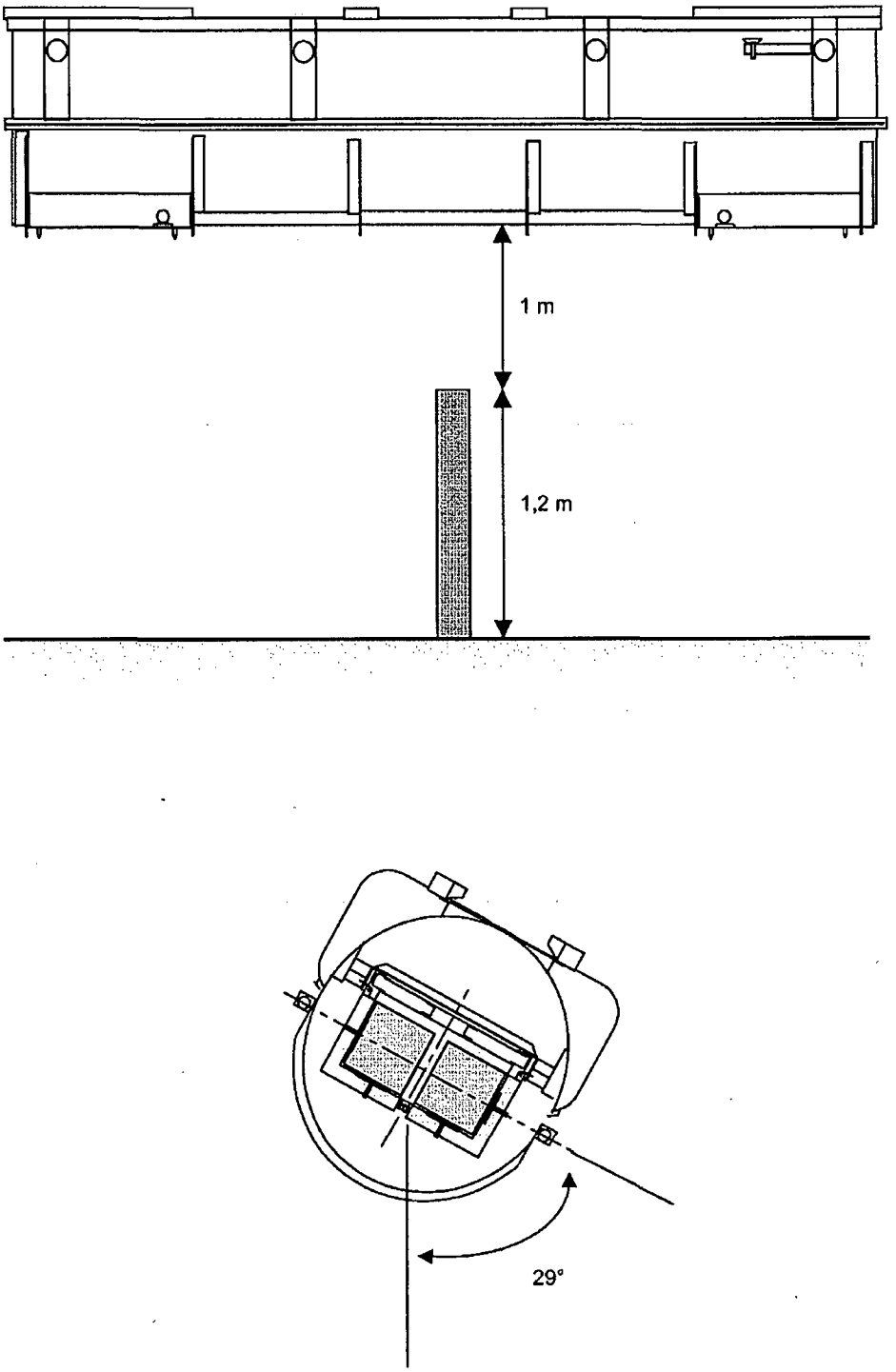

FRAMATOME ANP – Nuclear Fuel – Design and Sales Division

Figure 5.5.3.1.1b
Drop test – Accident conditions of transport – Drop on bar N°2

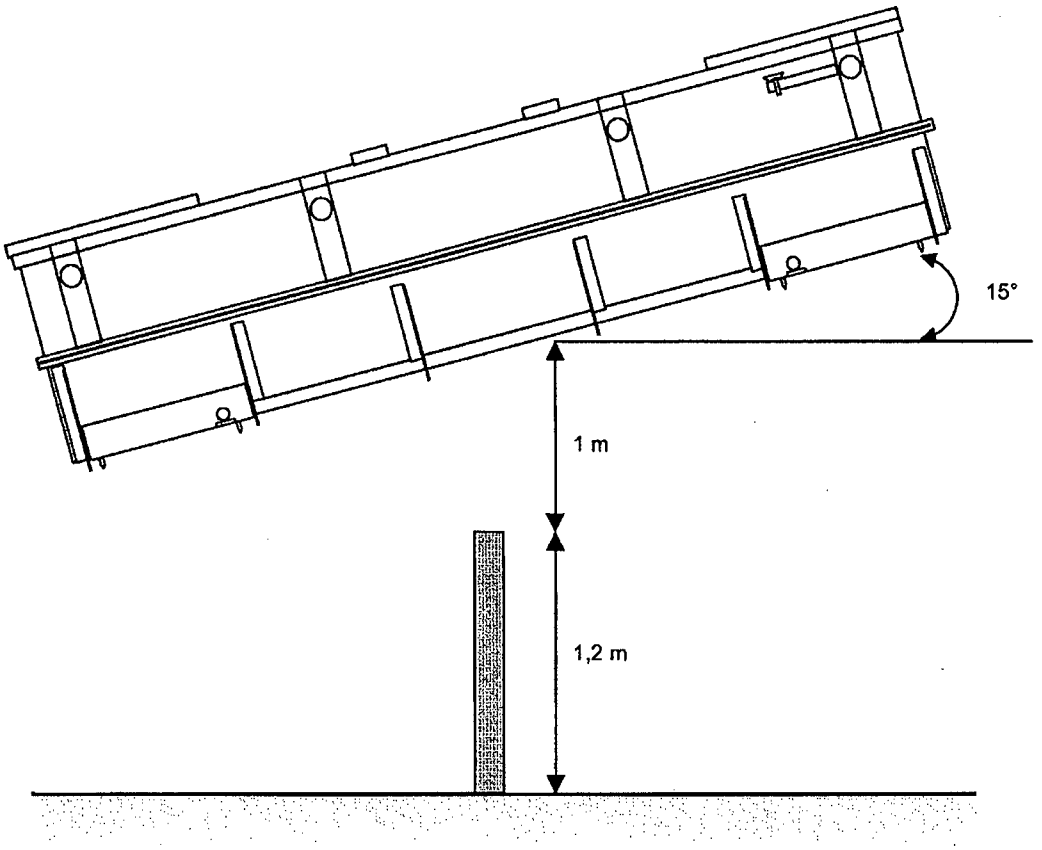

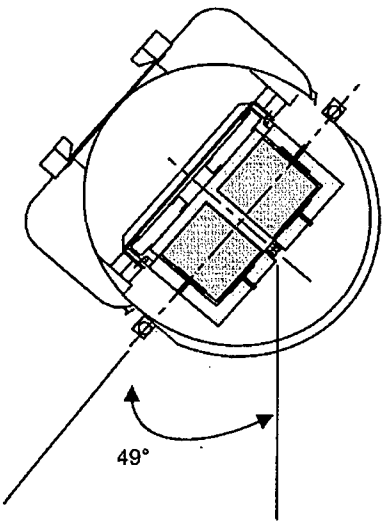

FRAMATOME ANP – Nuclear Fuel – Design and Sales Division

Figure 5.5.3.1.2
Drop test – Accident transport conditions - 9 m flat drop

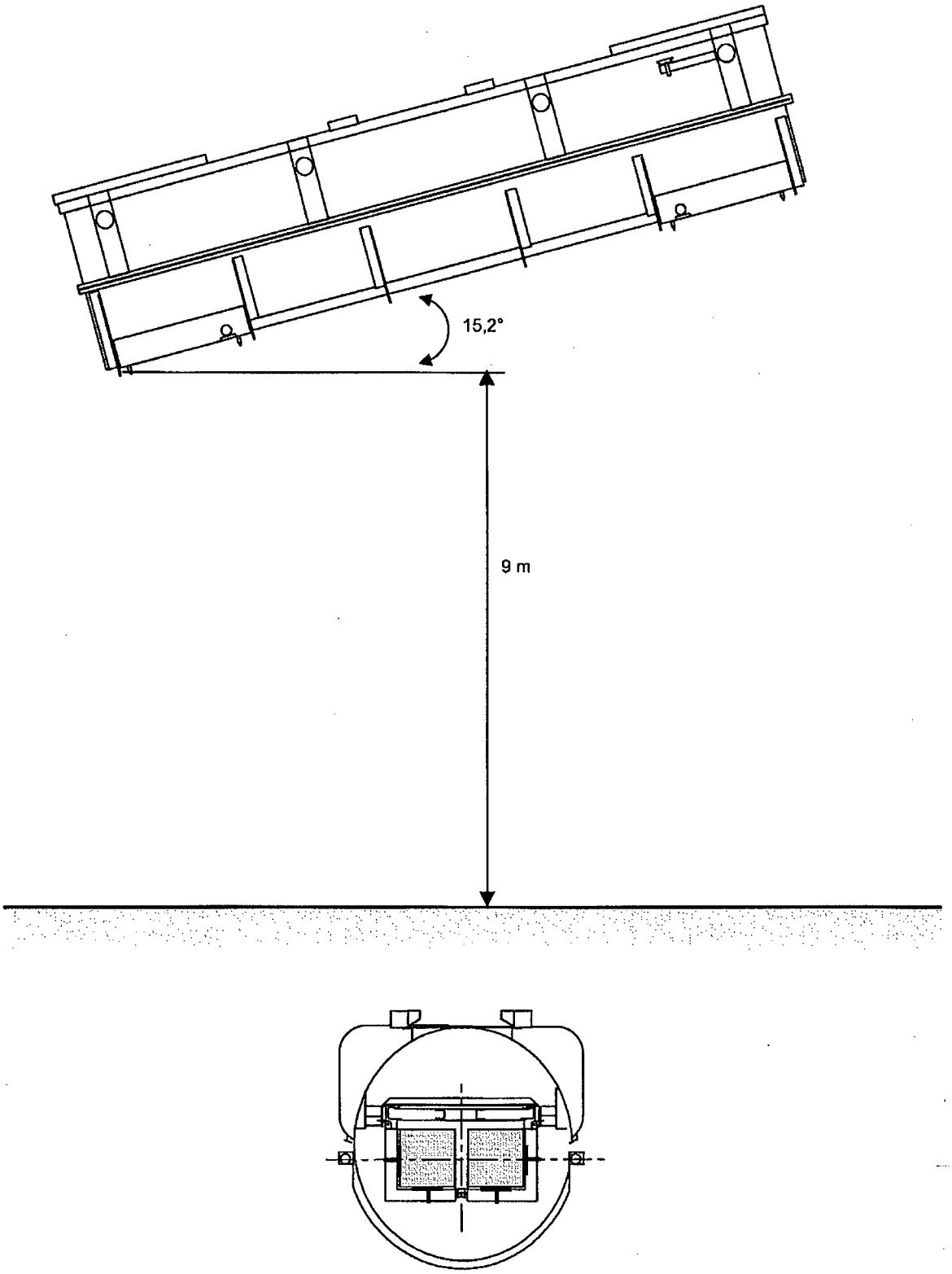

FRAMATOME ANP – Nuclear Fuel – Design and Sales Division

FRAMATOME ANP – Nuclear Fuel – Design and Sales Division

6. ANALYSIS OF THE COMPONENTS IMPORTANT FOR SAFETY

The Components Important for Safety (CIS) for the FCC3 packaging are as follows:

- The top and bottom plate connection with the frame-door assembly,
- The links between the doors and the frame,
- The doors,
- The support frame,
- The resin,
- The axial shock absorbers,
- The half shell connector bolts.

The analysis in Tables 6.1 and 6.2 shows that all the Components Important for Safety continue to fulfil their functions after the three drops (two drops on bar and one 9 m flat drop). Table 6.1 describes the main failure modes of the CIS, prior to the regulatory tests, and their effects on the assembly and package. Table 6.2 draws a parallel between the package condition on completion of the regulatory tests and the hypotheses taken into account in the criticality studies for the CIS.

The frame-door assembly sustained degradation during the mechanical tests, but the successive drops led overall to shrinking of the cavity, which is a favourable factor for criticality. The door tears are the result of the combination of the two drops on bar, which targeted the same impact point on the door containing the assembly. However, the resin thickness was unaffected and the neutronic protection function was still fulfilled.

On completion of these mechanical tests, no fuel rods were broken, the confinements formed by the rod claddings and the top end plugs were undamaged and continued to fulfil their confinement function. Likewise, the internal equipment system, despite the impacts of the drops, still afforded protection to the assemblies as all the door/frame/top and bottom plate connections remained intact during the drops.

These initial results show that the drop configurations chosen in the document "Choice of drop configurations" - TFXE/DC/2104 in Appendix 11 proved highly conservative for the FCC4 packaging, but the latter performed very well mechanically, validating the hypotheses in the criticality studies. This overall analysis is applicable to the FCC3 packaging.

Table 6.1
General analysis of the functions important for safety

GENERAL ANALYSIS OF THE FUNCTIONS IMPORTANT FOR SAFETY				
COMPONENTS IMPORTANT FOR SAFETY	FUNCTIONS IMPORTANT FOR SAFETY	FAILURE MODE	POTENTIAL FAILURE EFFECTS	
			ON THE ASSEMBLY	ON THE PACKAGE
Connection between the top and bottom plates and the frame and doors	• mechanically protect the assembly axially • maintain housing geometry	• rupture of the plate fasteners	• axial deformation of the assembly • assembly slipping in the container	• none
Connection between the doors and frame	• maintain housing geometry • limit temperature rise in the cavity	• rupture of the connections	• risk of assembly damage	• doors wide-open • risk of temperature rise in the cavity
Doors and frame	• contain the resin • maintain housing geometry • mechanically protect the assembly laterally • limit temperature rise in the cavity	• door tearing • door deformation • frame deformation	• lateral deformation of the assembly • risk of rod rupture	• loss of resin • deformation of housing geometry • risk of temperature rise in the cavity
Resin	• ensure loss of neutronic interaction • limit temperature rise in the cavity	• resin degradation • thickness reduction • loss of resin	• risk of assembly damage	• damage of the neutron-absorbing shield • risk of temperature rise in the cavity
Bolted connection between half-shells	• provide connection between the upper and lower shells • hold the shock absorbers in place	• shearing of some connecting bolts	• risk of assembly damage	• pulling apart of the shock absorbers
Axial energy absorbers	• dampen the loads applied to the assembly during axial shocks	• loss of shock absorber characteristics • slipping of the shock absorbers	• axial deformation of the assembly	• crushing of the shell and door-frame assembly
Lower and upper half shells	• Dampen loads applied to content during regulatory drops. • Spacing of fissile materials in array of packages	• Tearing • Bowing	• risk of assembly damage	• modification of package array geometry • deformation of housing geometry

Table 6.2: Analysis of components important for safety during regulatory tests

ANALYSIS OF THE BEHAVIOUR OF THE COMPONENTS IMPORTANT FOR SAFETY DURING REGULATORY TESTS AND COMPARISON WITH THE CRITICALITY STUDY MODEL				
COMPONENTS IMPORTANT FOR SAFETY	MOST DEMANDING MECHANICAL TESTS	PACKAGE CONDITION AFTER THE MECHANICAL TESTS	CRITICALITY STUDY MODEL	EVALUATION OF CRITICALITY RISK
Connection between the top and bottom plates and the frame and doors	• 9 m axial drop (justification by calculation)	• **good performance of the top and bottom plate connection**	• no change in geometry between normal and accident conditions for the top and bottom plates	• **no risk**
Connection between the doors and frame	• Drops on bar • 9 m flat drop	• **5 mm maximum gap between doors and frame**	• zero-gap model as worst-case configurations are taken into account (differential drainage, mist)	• no risk more conservative criticality model
Doors and frame	• Drops on bar • 9 m flat drop	• **2 door tears (70 mm and 30 mm) due to combination of 2 drops on bar** • **impacts on door** • **30 mm bowing of frame** • **Shrinking of cavity** • **F/A deformation** • **No rod rupture**	• Accident configuration: - parallepiped shell of thickness 100 mm around the cavity, - filled with water or empty. • Section of cavity at max of construction value • Section of assembly expanded to cavity section	• No risk Criticality study model more severe because of expansion
Resin	• Drops on bar • Thermal test	• **Constant resin thickness (44mm) except at the impact point (42 mm min and 46 mm max)** • **Damaged resin**	• Modification of resin thickness in the outer surfaces and of its characteristics: - 7 mm empty outside - 7 mm without hydrogen - 30 mm where resin intact	• No risk More conservative criticality model
Bolted connection between half-shells	• Drops on bar • 9 m flat drop • 9 m axial drop (justification by calculation)	• **one bolt sheared during drop on bar n°1** • **good performance of the connection after the drop tests**	• Accident configuration: - parallepiped shell of thickness 100 mm around the cavity, - filled with water or empty.	• **No risk**
Axial energy absorbers	• 9 m axial drop (justification by calculation)	• **the final calculated thickness of the absorbers following the axial drop is 89 mm**	• absorber s replaced by void or water • longitudinal gap between shell and cavity reduced to minimum remaining thickness of absorber after axial drop: 80 mm	• **no risk** conservative criticality model
Upper and lower half shells	• 9-meter axial drop, • Drop on bar	• **Perforation of upper shell** • **Indentation of shells**	• Accident configuration: - parallepiped shell of thickness 100 mm around the cavity, - filled with water or empty.	• **no risk (conservative criticality model)**

FRAMATOME ANP – Nuclear Fuel – Design and Sales Division

7. QUALITY ASSURANCE

7.1 General remarks

The design and regulatory qualification of the FCC3 packaging are in accordance with the FRAMATOME Quality Assurance programme. Through its workmanship, the FCC3 packaging meets the regulatory requirements as stated in this report.

Likewise, the procurement of the raw materials and components and the manufacturing of the packaging are performed by companies applying a quality assurance programme, in accordance with article 310 of regulation [1] and certified ISO 9001.

7.2 Manufacturing inspections

7.2.1 Procurement inspection

The procurement inspection is conducted by the manufacturer. For each sub-order, a certificate is issued.

Material certificates or certificates of compliance with the applicable standards (AFNOR or equivalent) are supplied for metal components, (chemical composition and mechanical properties)

7.2.2 In-process inspections

In-process inspections are systematically conducted by the manufacturer, in accordance with a list previously approved by FRAMATOME. These inspections centre on the dimensional characteristics and workmanship.

The welds of load-bearing parts are executed as per processes approved in compliance with the General Requirements of the AQUAP [4] for the parts recovered from the RCC and with the AFNOR NF EN 288 [5] standards for new portions.

These welds are executed by qualified welders in accordance with Standard NFEN 287-1 [6], and are liquid penetrant examined.

The welds are all identified (Sxx) and shown on the drawings in line with the standardised symbols for engineering drawings (ISO 2553). They are noted in a welding record in accordance with the above-mentioned standards guaranteeing the strength levels aimed for and/or taken into account during the design phase.

7.2.3 End of manufacturing inspections

Visual and dimensional inspections are conducted at end of manufacturing as part of the packaging acceptance process. Table 7.2.3 lists the design and manufacturing criteria for the Components Important for Safety referred to in chapter 6.

Table 7.2.3: Classification of safety - related components

Components	Safety Functions	Functions important for safety	Safety components	Criteria	Inspections/checks	Inspection criteria
Frame	containment	Maintain container geometry	- connection door/frame	- mechanical strength of intermediate ribs	• dimensional check of ribs	Rib thickness: 14,4 mm mini Ligament thickness: 5 mm mini
					• rib material	Material report: Re mini: 205 MPa Rm mini: 490 MPa
			- connection frame/top plate	- mechanical strength of upper rib	• no dimensional check of the upper rib: largely oversized	
					• Upper rib material	Material report: Re mini: 205 MPa Rm mini: 490 MPa
				- mechanical strength of welds S2 and S14	• visual on welds	No fault indication
					• Welds dimensions	Apothem: 3 mm for S2 2 mm for S14
			- connection frame/bottom plate	- mechanical strength of bottom rib	• no dimensional check on bottom rib: largely oversized	
					• bottom rib material	Material report: Re mini: 205 MPa Rm mini: 490 MPa
				- mechanical strength of S1 and S13 welds	• visual on welds	No fault indication
					• Welds dimensions	Apothem: 3 mm for S1 2 mm for S13
		Mechanical protection of assembly	- half-cavity (frame side)	- mechanical strength of plates	• Plates material	Material report: Re mini: 205 MPa Rm mini: 490 MPa
					• Plates dimensions	Upper plate thickness: 4.6 mm mini

Components	Safety Functions	Functions important for safety	Safety components	Criteria	Inspection/checks	Inspection criteria
Frame	Thermal protection and sub-criticality	contain the resin	- adequate resin containment volume	- mechanical strength of plates	• plate material	Material report: Re mini: 205 MPa Rm mini: 490 MPa
					• Plates dimensions	Thickness Upper plate: 4.6 mm mini lower plate: 2.6 mm mini
				- mechanical strength of S3, S5, S9 and S10 welds	• visual of S3, S5, S9 and S10 welds	No fault indication
					• weld passivation check	No ferritic elements
				- resin thickness	• Intermediate ribs dimensions	Height of rib fins: 43.8 mini Rib core width: 66 mini

Components	Safety functions	Functions important for safety	Safety components	Criteria	Inspections/checks	Inspection criteria
Door	Containment	Maintain container geometry	- Door/frame connection	- Mechanical strength of intermediate ribs	• Rib dimensions	Rib thickness: 24.2 mm mini Ligament thickness: 5 mm mini
					• Rib material	Material report: Re mini: 205 MPa Rm mini: 490 MPa
			- Door/upper plate connection	- Mechanical strength of upper rib	• no dimensional check on the upper rib: largely oversized.	
					• Upper rib material	Material report: Re mini: 205 MPa Rm mini: 490 MPa
				- Mechanical strength of S3 weld	• Visual of S3 weld	No fault indication
					• S3 weld dimensions	Apothem: 2 mm
			- Door/bottom plate connection	-Mechanical strength of bottom rib	• No dimensional check of bottom rib: largely oversized	
					• Bottom rib material	Material report: Re mini: 205 MPa Rm mini: 490 MPa
				- Mechanical strength of S5 weld	• Visual of S5 weld	No fault indication
					• S5 weld dimensions	Apothem: 2 mm
		Mechanical protection of assembly	- Half cavity (door side)	- Mechanical strength of plates	• Plate material	Material report: Re mini: 205 MPa Rm mini: 490 MPa
					• Plate dimensions	Plate thickness: 2.6 mm mini
	Thermal protection and sub-criticality	Resin containment	- Adequate resin volumes	- Mechanical strength of plates	• Plate material	Material report: Re mini: 205 MPa Rm mini: 490 MPa
					• Plates dimensions	Plate thickness: 2.6 mm mini
				- Mechanical strength of S1, S2, S9, S12 et S13 welds	• Visual check	No fault indication
					• weld passivation check	No ferritic elements
				- adequate geometry	• Intermediate rib dimensions	Rib fin width: 43.6 mm

Components	Safety functions	Functions important for safety	Safety components	Criteria	Inspections/ checks	Inspection criteria
Pins	Containment	Maintain container geometry	- Door/frame connection	- Mechanical strength of pins	• Pin material	Double shear strength: 22000 daN (ø16) 28000 daN (ø18)
			- Frame/upper plate connection			
			- Door/upper plate connection			Resilience KV at –40°C > 28 J/cm^2
			- Door/bottom plate connection			Tensile strength Rm = 1200 MPa
Hinge pins	Containment	Maintain container geometry	- Door / frame connection	- Mechanical strength of hinge pins	• Hinge pin dimensions	Min diameter hinge pin: 17.95 mm
					• Hinge pin materials	Material report: Re mini: 700 MPa Rm mini: 900 MPa
						Resilience KV at –40°C > 28 J/cm^2
			- Door / tenon connection	- Mechanical strength hinge pins	• Hinge pin dimensions	Min diameter hinge pin: 16,00 mm
					• Hinge pin materials	Material report: Re mini: 700 MPa Rm mini: 900 MPa
						Resilience KV at –40°C > 28 J/cm^2
			- Frame / upper plate connection	- Mechanical strength of hinge pins	• Hinge pin dimensions	Min diameter hinge pin: 16.00 mm
					• Hinge pin materials	Material report: Re mini: 700 MPa Rm mini: 900 MPa
						Resilience KV at –40°C > 28 J/cm^2
Scr ew	Containment	Maintain container geometry	- Frame/bottom plate connection	- Mechanical strength of screws	• Tearing strength	Dimension: M20 Rm mini: 800 MPa
Tenons	Containment	Maintain container geometry	- Frame/upper plate connection	- Mechanical strength of tenons	• Tenons dimensions	Tenon thickness: 33 mm mini Ligament thickness: 5 mm mini
			- - Frame/bottom plate connection		• Tenons material	Material report: Re mini: 205 MPa Rm mini: 490 MPa

Components	Safety functions	Functions important for safety	Safety components	Criteria	Inspections / checks	Inspection criteria
Upper plate	Containment	Mechanical protection of assembly	- Cavity closure plate	- Mechanical strength of plate	• Plate material	Material report: Re mini: 205 MPa Rm mini: 490 MPa
					• Plate dimensions	Plate thickness: 29.2 mm mini.
					• Material ligament dimensions	Minimum thickness 6.16 mm mini 6.01 mm mini 5.46 mm mini 8.12 mm mini 5.16 mm mini
Bottom Plate	Containment	Mechanical protection of assembly	- Cavity closure plate	- Mechanical strength of plate	• Plate material	Material report: Re mini: 205 MPa Rm mini: 490 MPa
					• Plate dimensions	Plate thickness: 29.2 mm mini.
					• Dimensions under spot facing	Material thickness: 13.7 mm mini.
					• Material ligament dimensions	Thickness: 6.16 mm mini.
Frame/doors set	Thermal protection	Limitation of temperature rise in container	- Doors/frame gap	- Compliance with max gap	Frame / door (hinge side) gap	Max. gap: 5 mm
					• Frame/door (locking side) gap	Max. gap: 5 mm
					• Bottom plate /door (lower side) gap	Max. gap: 5 mm
					• Upper plate/ door (upper side) gap	Max. gap: 5 mm
				- Mechanical strength of connections	See above	
	Sub-criticality	Limitation of neutron cavity volume	- Dimensions of internal faces of frame/doors set	- Maximum cavity section	- Per sampled cavity section, measurement of height H and width L.	Per sampled section, $H_{mean} \times L_{mean} \leq S_{maxi}$ with S_{maxi} depending on series: - FCC3 V1 and FCC4 V1 $S_{maxi} = 219^2$ mm^2, - FCC3 V2 $S_{maxi} = 213^2$ mm^2 inbottom housing of pad - FCC4 V2 $S_{maxi} = 235^2$ mm^2

Components	Safety functions	Functions important for safety	Safety components	Criteria	Inspection / checks	Inspection criteria
Resin	Sub-criticality	Neutron decoupling	- Injected resin	- Neutron-absorbing characteristics	• Batch chemical analysis	Hydrogen content: %H ≥4.65 Boron content: %B ≥2.1 Density > 1.6 g/cm^3
				- Fill-up of cavity	• Process qualification	Qualification report
					• Controlled injection procedure	Injection report
	Thermal protection	Limitation of temperature rise in the cavity		- Chemical composition (specially aluminium)	• Qualified resin injection process	Aluminium content: %Al = 15,5
				- Thermal strength		Thermal conductivity ≤0.75 W/(m.K) at 160°C Heat Capacity ≥1.45 J/(g.°C) at 160°C
Energy absorber	Containment	Load damping	- Balsa fibre characteristics	- Crush resistance	• Average measured stress between 0 and 70% crushing	Check report per batch: crush resistance 12 MPa (± 2) between –40°C and +38°C
				- Fibre orientation	• Visual check	Fibre direction as specified in drawing
				- Moisture	• Moisture content	Moisture content: 10% $^{\pm 2}$
					• Weld dye penetrant test	No fault indication
			- Adequate absorber thickness	- Absorbers dimensions	• Absorber thickness	FCC 3: thickness: 163 mm mini FCC 4: thickness: 170 mm mini

Components	Safety functions	Functions important for safety	Safety components	Criteria	Inspections/checks	Inspection criteria
Upper shell	Containment	Ensure connection with lower shell	- shell connection	- Flange mechanical strength	• Issued for RCC packaging and validated by FCC packaging drop tests	
		Strength of lifting points	- Lifting boxes and welds on boxes	- Mechanical strength of lashing points	• Load test with slinging	No visible bowing or cracking on plates and welds following a 15 min. test at nominal load with diagonal slinging
		Load damping	- Shell	- mechanical strength	• Regulatory drop tests	RCC shell
Lower shell	Sub-criticality	Spacing of fissile content in array of packages	- Shell	- Shell dimensions	• Shell dimensions	RCC shell
	Containment	Ensure connection with upper shell	- Shell connection	- Flange mechanical strength	• Compliance with FCC drop tests	RCC shell
				- No brittle fracture at – 40°C	• Resilience at – 40°C	At -40°C , Kv ≥40.J/cm^2
		Load damping	- Shell	- Mechanical strength	• Regulatory drop tests	RCC shell
	Sub-criticality	Spacing of fissile content in array of packages	- Shell	- Shell dimensions	• Shell dimensions	RCC shell

Components	Safety functions	Functions important for safety	Safety components	Criteria	Inspections/checks	Inspection criteria
Shell connection bolts	Containment	Ensure shell connections	- Shell connections	- respect of required number	• Number check	Number for FCC3: 30 bolts Number for FCC4: 50 bolts
				- Mechanical strength of bolts	• Material	Material report: 42 DC 4 checked class 10.9 for the screw class 10 for the nut 120 daN/mm^2 for washer
					• Special bolts dimensions	Dimension of the design drawing for the special bolt
				- No brittle fracture at – 40°C	• Resilience at -40°C	At -40°C , Kv ≥35.J/cm^2

FRAMATOME ANP – Nuclear Fuel – Design and Sales Division

8. OPERATION

8.1 Instructions for use

Before beginning to load content into a packaging, the checks in § 4.2.1 and 4.2.2 of this document are made.

Preparation for Transport operations are performed to enforce the duly validated procedures whose outline is given in Appendix 15.

During and after these operations, the checks given in § 4.2.3 of this document are made.

The operating procedures prevent the shipment of packages deviating from the stated criteria.

8.2 Checking and maintenance instructions

When the first of the limits is reached - 5 years or 50 rotations(*) – the packaging is subjected to the following checks and maintenance:

- Replacement of all half-shell connecting bolts,
- Examination of the gripping zones for lifting (search for excess deformation and/or cracks by visual and liquid penetrant examination),
- Check on the working of the safety check valve,
- Check on the tightening of all the bolted connections,
- Check on the wear of the door hinge pins and hinges, of the top and bottom plates and of the frame pivots with replacement if necessary,
- Check on the frame condition,
- Check on the presence and good condition of the pin retainers (retaining rings, lock pin, set screw),
- Check on the condition of the ball locking pins and on the efficiency of locking in the yokes,
- Sand-blasting and paint-coating of the outer face of the shells (inner face every 10 years).

(*) A rotation represents the route taken by the packaging during shipment and delivery of fuel assemblies :

- FGFC plant where assemblies are loaded into packagings
- The site location where assemblies are delivered and unloaded
- FBFC plant where the packaging is returned.

The shock absorbers are subjected to the following inspections and maintenance:

- Visual check on the good appearance of the shock absorber (no dents, welds) every 5 years,
- Liquid penetrant examination of the shock absorber welds every 10 years.

8.3 Monitoring Operations and Maintenance

Each packaging has an accompanying file with information on:

- The actual use made of the container,
- The unscheduled incidents encountered and/or minor maintenance performed,
- The scheduled maintenance dates (every 5 years and/or 50 rotations),
- The results of the inspections and the parts replaced during scheduled inspections.

FRAMATOME ANP – Nuclear Fuel – Design and Sales Division

FRAMATOME ANP – Nuclear Fuel – Design and Sales Division

9. CONCLUSION

The FCC3 packaging, as defined in this report, is used to transport fissile radioactive materials (ENU or REPU) either in the form of assemblies with a nominal length 8, 10 and 12 ft., or in the form of non-assembled rods with a nominal length 8, 10 and 12 ft. grouped in rod channels.

The internal equipment system of the packaging is tailored to the transported contents and therefore comes in two versions: version 1 for 17x17 and 15x15 assemblies and the 12 ft rod channels and version 2 for the 14x14 assemblies with a length of 8 and 10 feet.

For compliance with the regulatory requirements for transport by road, rail and sea, the packaging and its contents (package) meet the demands of the IAEA Regulation (96 edition) which covers each of the regulations for the intended conveyances.

Considering the radioactive materials being shipped, the fissile materials are classified as LSA II according to [1] for the transportation of ENU and the transportation of REPU. The package is then defined as a type 2 fissile Industrial Package (IP-2).

The safety file furnishes the necessary proofs (calculations and tests) to demonstrate the sub-criticality of the package on completion of the normal and accident transport regulatory tests.

The design and the regulatory qualification of the FCC3 packaging are performed in accordance with FRAMATOME's Quality Assurance programme. The procurement of the raw materials and components, and the manufacturing of the packaging, are performed by companies enforcing a quality assurance programme and certified ISO 9001.

The FCC3 packaging meets the requirements of IAEA 1996 regulations on transportation of radioactive materials.

FRAMATOME ANP – Nuclear Fuel – Design and Sales Division

Drawing of the FCC3 packaging
12 ft - 17 × 17 design
Version 1

- **General assembly drawing - 229 K 0100 and associated lists**
- **Operating drawing 229 K 0101**
- **Safety-related characteristics - Drawing 229 K 0102**
- **Assembly drawing « lower shell » 229K0105**
- **Assembly drawing « upper shell » 229K0110**
- **Sub-assembly drawing « Cradle » 229K0130**
- **Sub-assembly « support frame » 229K0145**
- **Sub-assembly drawing « left door » 229K0170**
- **Rod channel – FCC packaging - FF DC 01038**

DRAWING WITHELD UNDER 10 CFR 2.390

DRAWING WITHELD UNDER 10 CFR 2.390

DRAWING WITHELD UNDER 10 CFR 2.390

DRAWING WITHELD UNDER 10 CFR 2.390

DRAWING WITHELD UNDER 10 CFR 2.390

DRAWING WITHELD UNDER 10 CFR 2.390

DRAWING WITHELD UNDER 10 CFR 2.390

FRAMATOME ANP 10, Rue Juliette Récamier 69456 LYON CEDEX 06 FRANCE	Type of document : Design, calculation, analysis, summary and method report	
NUCLEAR FUEL	Class	Pages : 7
DESIGN AND SALES DIVISION	N	Appendices : 1

Document title

FCC container rod box

******

Specification of requirements for supply

KEY-WORDS :

Distribution	FFTC	FBFC	FFX	FFR	FFF			
Purpose of distribution	GED Patrimoine	For application	For information purposes	For information purposes	For information purposes			
Number	.pdf	2	1	1	1			

REV	DATE	AUTHOR	VERIFIED BY	MODIFICATIONS – COMMENTS	STATUS	APPROVED BY
A	17.05.2004	Caupenne&Co	E. ROUX		CFC	

CLASSIFICATION : 229 K

U.D. :

INTERNAL IDENTIFICATION NUMBER

FF DC 01038 E0

This document is the property of FRAMATOME ANP SAS . No information contained herein may be divulged to a third party without the prior written approval of FRAMATOME ANP NUCLEAR FUEL – Design and Sales Division, under the terms of french law n° 57298 dated 11.03.1957.

REVISIONS

DATE	INDEX	OBSERVATIONS
17.05.2004	A	First issue

FRAMATOME ANP – Nuclear Fuel – Design and Sales Division

CONTENTS

1. PURPOSE 3

2. SCOPE AND LIMIT OF THE SUPPLIES 3

2.1 General description 3

2.2 Scope and limit to the equipment to be supplied 5

2.3 Scope and limit of services 6

3. DESIGN CONDITIONS 6

4. MATERIALS 6

5. MANUFACTURING AND CORRESPONDING CHECKS 7

6. DOCUMENTS TO BE DRAFTED BY THE SUPPLIER 7

FRAMATOME ANP – Nuclear Fuel – Design and Sales Division

LIST OF APPENDICES

Appendix 1 Rod box project diagram (12 pages)

FRAMATOME ANP – Nuclear Fuel – Design and Sales Division

1. PURPOSE

This document defines the requirements to manufacture rod boxes that will be transported in FCC containers.

The purpose of this document is to specify to FBFC the framework allowing to define the material's equipment specification.

2. SCOPE AND LIMIT OF THE SUPPLIES

2.1 General description

The transport of new fuel rods is performed in FCC packaging by placing the rods in a box arranged in one of the container cavities.

The design defines two rod box versions:

- ✓ version adapted to the FCC3 container,
- ✓ version adapted to the FCC4 container.

The box is made up of a U-formed sheet, closed at both ends and reinforced by means of 2 welded stringers at the upper part of the sheet (see Appendix, page 4 and 5).

When the rods are shorter than the box length, the remaining space is filled with blocks whose length is adapted to that of the rods. Therefore, axial blocks are defined for 12-foot, 10-foot, or 8-foot assembly rods.

In order to limit displacement of the centre of gravity, loading is performed at the centre of the box; 2 similar axial blocks are placed at the box ends. They are secured at the bottom of the box by a bolt & nut system so as not to rest on the rods in case of axial drop. Taking into account the fact that, according to the rod designs, their nominal lengths and their tolerance intervals vary, the bolt/nut linking system is adjustable by means of a lock nut so as to reduce axial play.

Taking into account the presence of stringers on the box, the width of axial blocks cannot be equal to that occupied by the rods. That is the reason why a wider rod end seating plate is positioned between the rods and the block (see Appendix, page 3).

The box is held longitudinally in position in the cavity thanks to 2 box blocks. The block positioned on the foot side between the container's footplate and the rod box is used to accommodate the adjustable system supporting the axial block. The block on the head side between the container's head plate and the rod box also supports the head plate pad, thus reducing the axial play between the box and the cavity.

The box is filled with complete row of rods (if required, complete the number of rods in the row with inert rods).

The cavity space above the rods is filled thanks to a block system. This arrangement is composed of a main radial block corresponding to the space above 13 rows of 10.75 mm Ø rods.

Taking into account the presence of stringers on the box, the radial block width cannot be equal to that occupied by the rods. That is the reason why installation of 2 plates side by side, placed between the rods and the radial block, allows to cover the rod bundle width (see Appendix, page 2).

When filling with 9.5 mm Ø rods or with a lower number of rows, the space is filled with a set of row compensating blocks.

FRAMATOME ANP – Nuclear Fuel – Design and Sales Division

This set is comprised of an upper block whose length is equal to the radial block, and short intermediate blocks positioned regularly between the upper block and the radial block. The assembly is maintained with bolts whose heads are housed in the thickness of the upper block and screwed into the radial block. The vertical play between the cavity and the block system is filled by resting the vertical pads of the container door.

In case of a reduced number of rows, 2 radial blocks are stacked in replacement of the excessive number of intermediate compensating blocks.

The horizontal play between the cavity and the rod box is filled by resting the container door horizontal pads on the box side.

FRAMATOME ANP – Nuclear Fuel – Design and Sales Division

2.2 Scope and limit to the equipment to be supplied

The minimum supply for each configuration is defined in the following table:

	FCC4 container					FCC3 container		
	14 foot 17x17 rods	14 foot 16x16 or 18x18 rods	12 foot 17x17 or 15x15 rods	10 foot 14x14 rods	8 foot 14x14 rods	12 foot 17x17 or 15x15 rods	10 foot 14x14 rods	8 foot 14x14 rods
FCC4 rod box	**1**	**1**	**1**	**1**	**1**	0	0	0
FCC3 rod box	0	0	0	0	0	**1**	**1**	**1**
2,460 mm radial block	**1**	**1**	0	0	**1**	0	0	**1**
1,900 mm radial block	**1**	**1**	**2**	**1**	0	**2**	**1**	0
1,260 mm radial block	0	0	0	**1**	0	0	**1**	0
2,460 mm seating plate	**1**	**1**	0	0	**1**	0	0	**1**
1,900 mm seating plate	**1**	**1**	**2**	**1**	0	**2**	**1**	0
1,260 mm seating plate	0	0	0	**1**	0	0	**1**	0
2,460 mm compensating block	**1**	**1**	0	0	**1**	0	0	**1**
1,900 mm compensating block	**1**	**1**	**2**	**1**	0	**2**	**1**	0
1,260 mm compensating block	0	0	0	**1**	0	0	**1**	0
Intermediate compensating block	**48**	**48**	**48**	**42**	**24**	**48**	**42**	**24**
75 mm axial block	0	**1**	0	0	0	0	0	0
310 mm axial block	0	0	**2**	0	0	0	0	0
645 mm axial block	0	0	0	**2**	0	0	0	0
935 mm axial block	0	0	0	0	**2**	0	0	0
330 mm axial block	0	0	0	0	0	0	**2**	0
620 mm axial block	0	0	0	0	0	0	0	**2**
140 mm box block	**1**	**1**	**1**	**1**	**1**	0	0	0
45 mm box block	**1**	**1**	**1**	**1**	**1**	**2**	**2**	**2**
Rod end seating plate	**2**	**2**	**2**	**2**	**2**	**2**	**2**	**2**
Handling lug	**2**	**2**	**2**	**2**	**2**	**2**	**2**	**2**

FRAMATOME ANP – Nuclear Fuel – Design and Sales Division

2.3 Scope and limit of services

The supply consists of:

- ✓ drafting the engineering drawing file
- ✓ manufacturing the components specified upon the order
- ✓ performing inspections
- ✓ carrying out acceptance
- ✓ drafting the manufacturing file.

3. DESIGN CONDITIONS

The design consists of defining the engineering file in adequacy with the supplier's industrial tool from the diagram provided in the Appendix:

Toleranced dimensions are to be complied with. Non-toleranced dimensions on the diagrams are to be defined with the tolerance allowed by the supplier's industrial tool.

The design also consists of lightening the assembly by defining recesses in some components without modifying their main mechanical features. Replacement of the block material with an aluminium alloy whose mechanical features are similar to those of 304 L stainless steel, features which are maintained on a range from -40°C to +500°C, is to be studied. The component manufacturing file will be redefined according to the alloy features (weldability, machinability, ...). Should tests be required, they will be proposed to the client via a procedure and will result in the drafting of a report.

The substantiation of the geometrical integrity of the blocks under a heavy load is performed in theory by calculation or by test with a press.

- axial block: strength to a 750,000 daN axial stress
- radial block: strength to a distributed radial stress proportional to its length
  - 425,000 daN for a 2,460 mm long block
  - 325,000 daN for a 1,900 mm long block
  - 220,000 daN for a 1,260 mm long block.

4. MATERIALS

Supply must be accompanied by a material report:

Selection of the aluminium alloy will be substantiated by a supplier's documentation or test results proving that the mechanical features are maintained up to 500°C.

FRAMATOME ANP – Nuclear Fuel – Design and Sales Division

5. MANUFACTURING AND CORRESPONDING CHECKS

The rod boxes are manufactured from a single-piece sheet. Should a solution with 2 butted sheets be proposed, flatness along 250 mm each side of the weld must not exceed 0.3 mm.

Stainless steel components must be stripped and passivated.

Aluminium components must be anodised.

Each similar component must be identified with an engraved number (order number according to the number specified on the order).

Traceability of the components must be ensured throughout manufacturing.

The parts must be checked by means of calibrated devices. The check will result in the issuance of a check report.

Each component must be weighed.

The client must be notified of any deviation with respect to the requirements by means of a report issued by the supplier as soon as said deviation is noticed. The client will decide on the way to process the deviation.

Manufacturing will be subject to acceptance in the presence of the client to demonstrate the functionalities of the assembly and compliance with the functional dimensions. Acceptance will be subject to a procedure submitted to the client for approval and a report completed upon carrying out acceptance.

6. DOCUMENTS TO BE DRAFTED BY THE SUPPLIER

The supplier will draft:

- a manufacturing schedule
- an engineering drawing file
- a quality plan
- a welding book
- a test procedure (in case of test)
- a test report (in case of test) or a theoretical justification
- a final check procedure
- an end-of-manufacturing inspection report
- a manufacturer file.

FRAMATOME ANP – Nuclear Fuel – Design and Sales Division

Appendix 1

Rod box project diagram

(12 pages)

FRAMATOME ANP – Nuclear Fuel – Design and Sales Division

DRAWING WITHELD UNDER 10 CFR 2.390

DRAWING WITHELD UNDER 10 CFR 2.390

DRAWING WITHELD UNDER 10 CFR 2.390

DRAWING WITHELD UNDER 10 CFR 2.390

DRAWING WITHELD UNDER 10 CFR 2.390

DRAWING WITHELD UNDER 10 CFR 2.390

DRAWING WITHELD UNDER 10 CFR 2.390

DRAWING WITHELD UNDER 10 CFR 2.390

DRAWING WITHELD UNDER 10 CFR 2.390

DRAWING WITHELD UNDER 10 CFR 2.390

DRAWING WITHELD UNDER 10 CFR 2.390

FRAMATOME ANP – Nuclear Fuel – Design and Sales Division

Drawing of the FCC3 packaging
12 ft - 15 x 15 design
Version 1

- **General assembly drawing 229 K 0200 and associated lists**
- **Operating drawing 229 K 0201**
- **Safety-related characteristics - Drawing - Plan 229 K 0202**
- **Sub-assembly drawing « left door » 229 K 0270**

DRAWING WITHELD UNDER 10 CFR 2.390

DRAWING WITHELD UNDER 10 CFR 2.390

DRAWING WITHELD UNDER 10 CFR 2.390

DRAWING WITHELD UNDER 10 CFR 2.390

DRAWING WITHELD UNDER 10 CFR 2.390

DRAWING WITHELD UNDER 10 CFR 2.390

DRAWING WITHELD UNDER 10 CFR 2.390

DRAWING WITHELD UNDER 10 CFR 2.390

DRAWING WITHELD UNDER 10 CFR 2.390

DRAWING WITHELD UNDER 10 CFR 2.390

DRAWING WITHELD UNDER 10 CFR 2.390

DRAWING WITHELD UNDER 10 CFR 2.390

FRAMATOME ANP – Nuclear Fuel – Design and Sales Division

Drawing of the FCC3 packaging
12 ft - 14 x 14 – 8 and 10 ft design
Version 2

- **Assembly drawing 229 K 0300**
- **Operating drawing 229 K 0301**
- **Safety-related characteristics - Drawing 229 K 0302**
- **Sub-assembly « left door » 229 K 0370**

DRAWING WITHELD UNDER 10 CFR 2.390

DRAWING WITHELD UNDER 10 CFR 2.390

DRAWING WITHELD UNDER 10 CFR 2.390

DRAWING WITHELD UNDER 10 CFR 2.390

DRAWING WITHELD UNDER 10 CFR 2.390

DRAWING WITHELD UNDER 10 CFR 2.390

DRAWING WITHELD UNDER 10 CFR 2.390

FRAMATOME ANP – Nuclear Fuel – Design and Sales Division

Photographs of the FCC3 packaging

- **Photographs of the FCC3 packaging**

Appendix 4 - Photographs of the FCC3 packaging

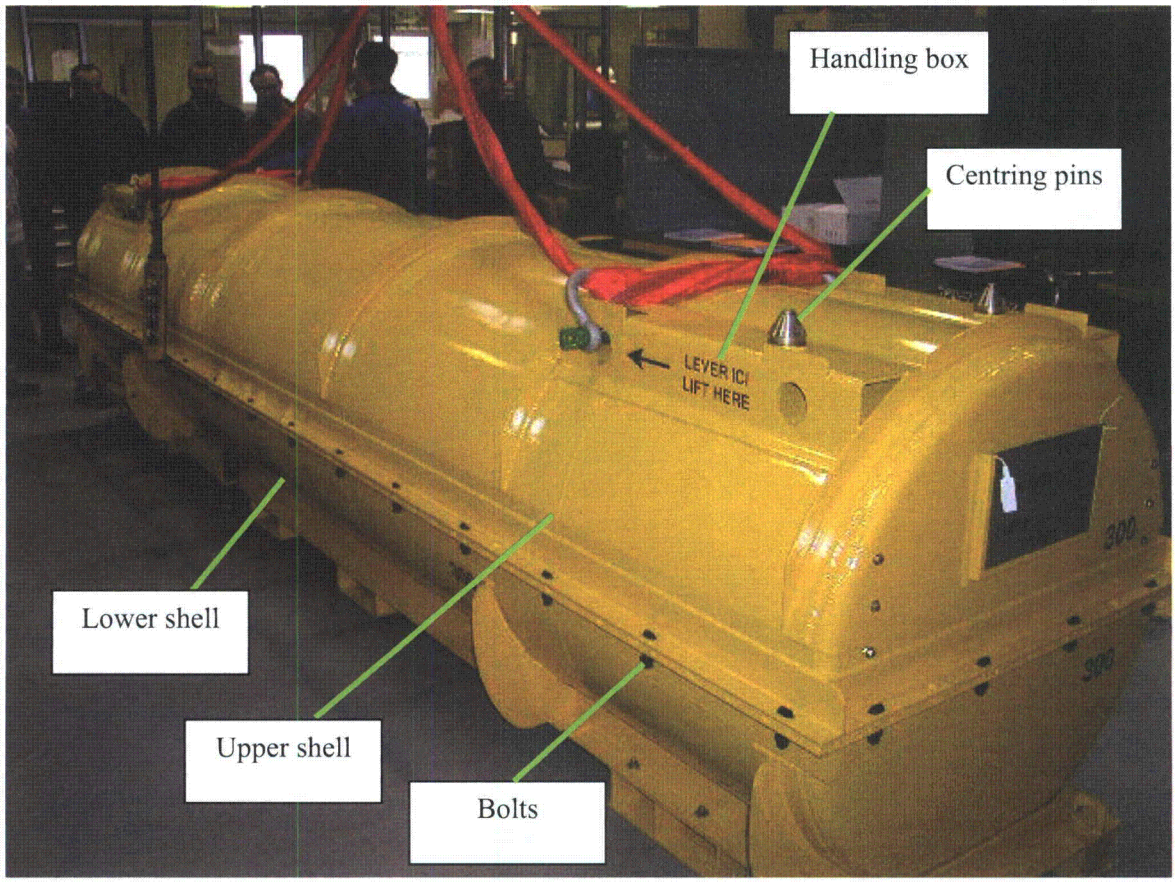

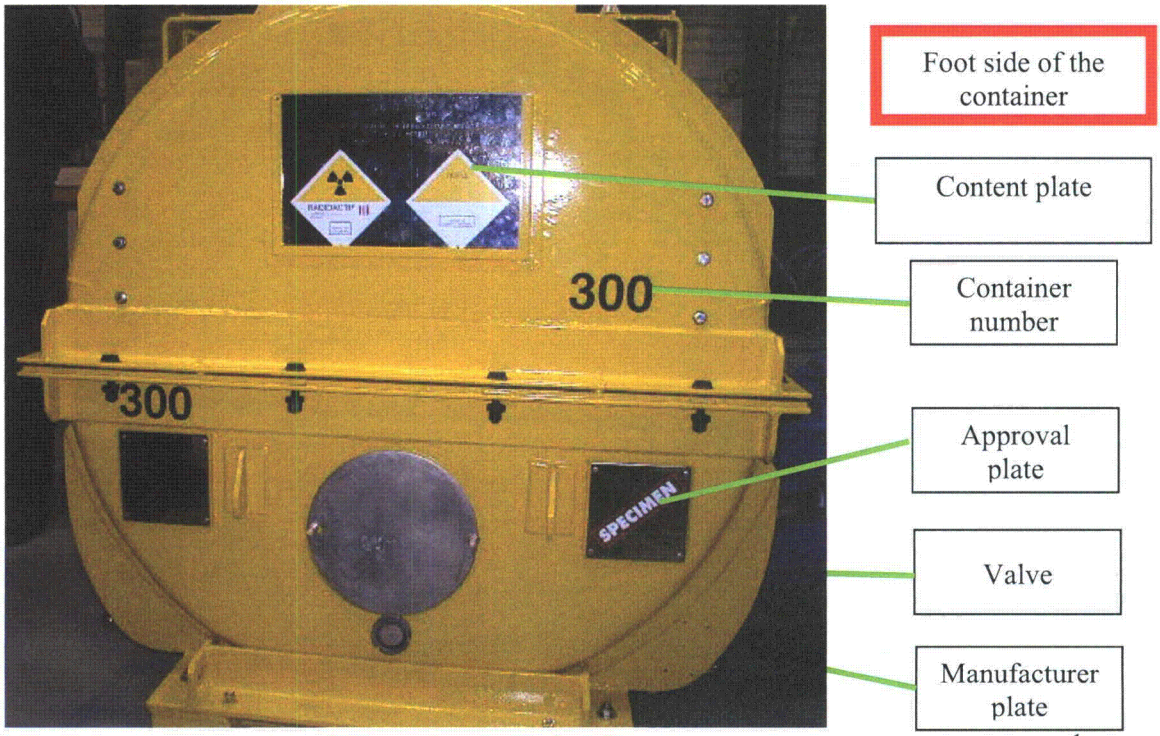

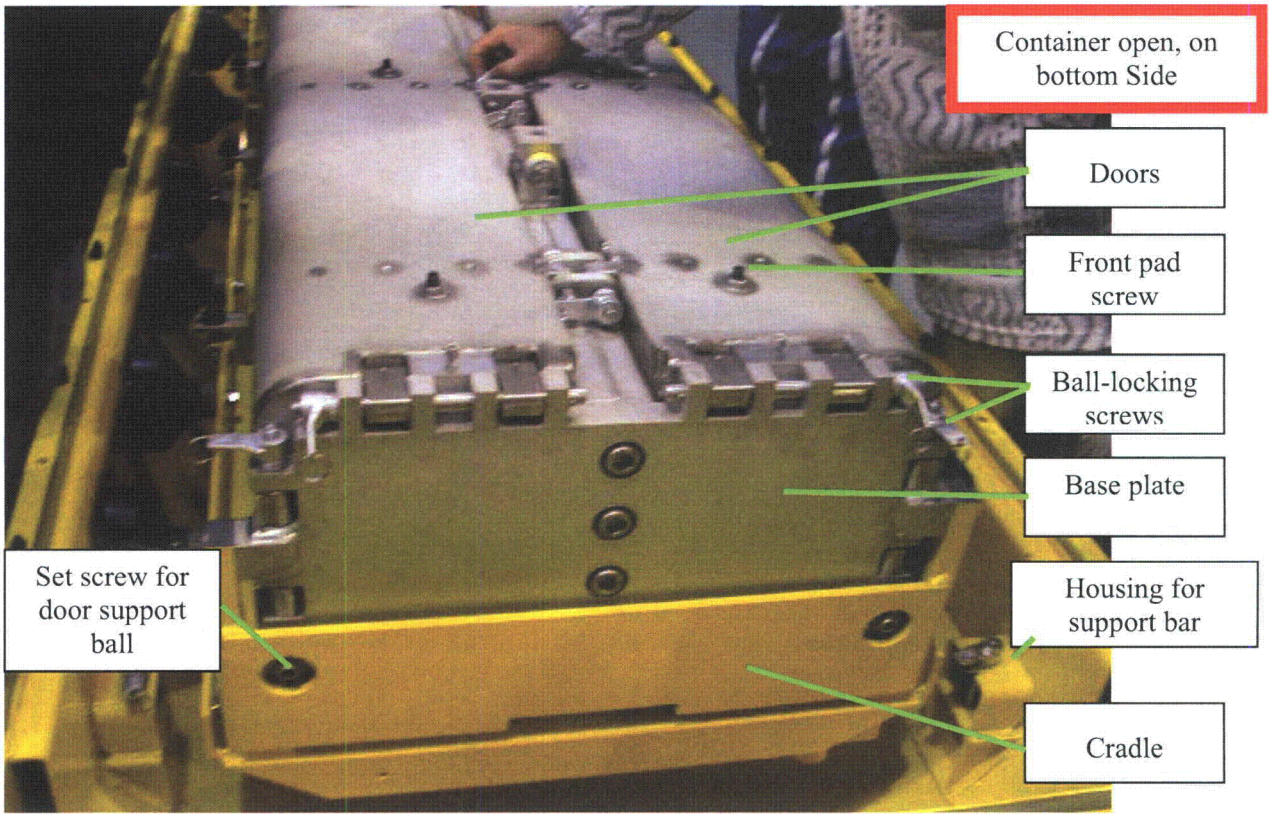
Container open, on bottom Side
Doors
Front pad screw
Ball-locking screws
Base plate
Housing for support bar
Cradle
Set screw for door support ball

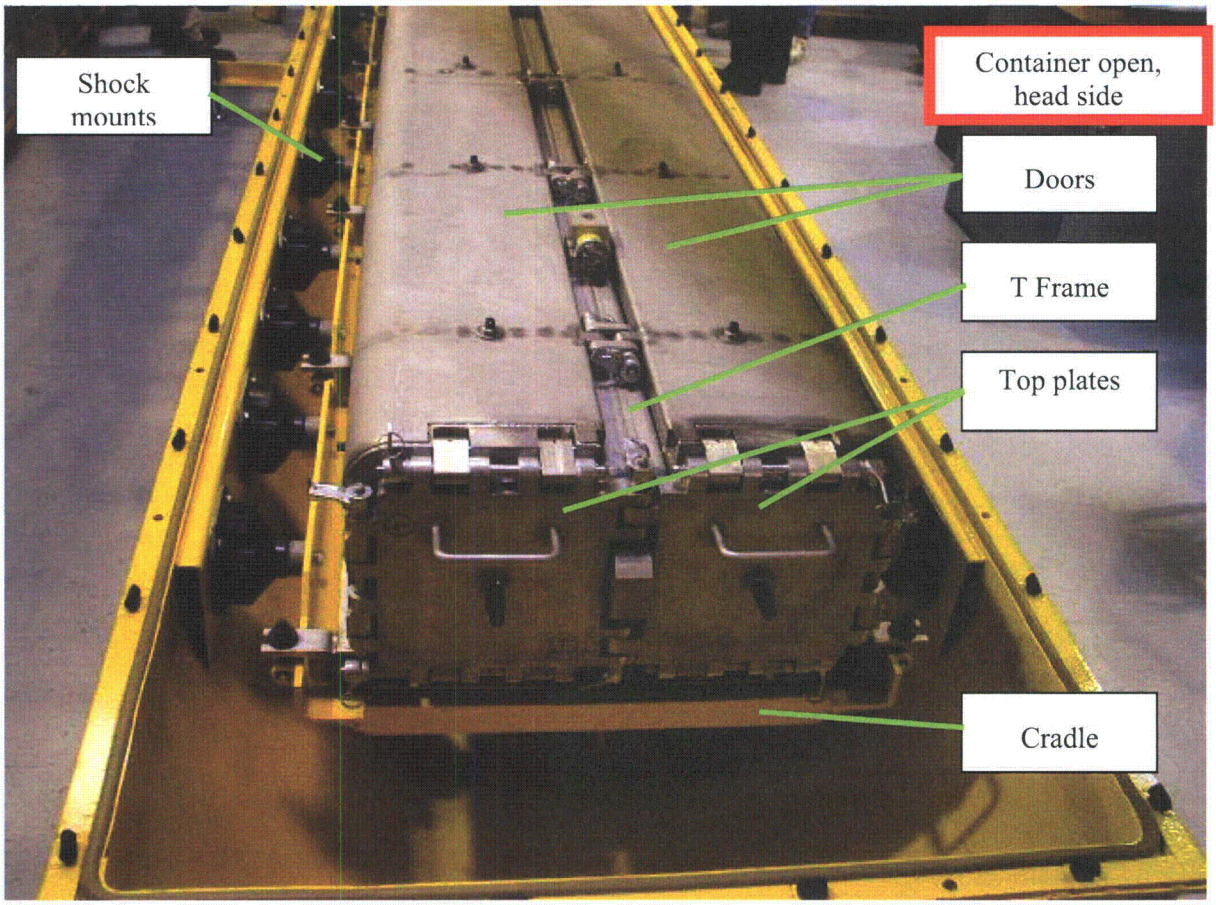
Shock mounts
Container open, head side
Doors
T Frame
Top plates
Cradle

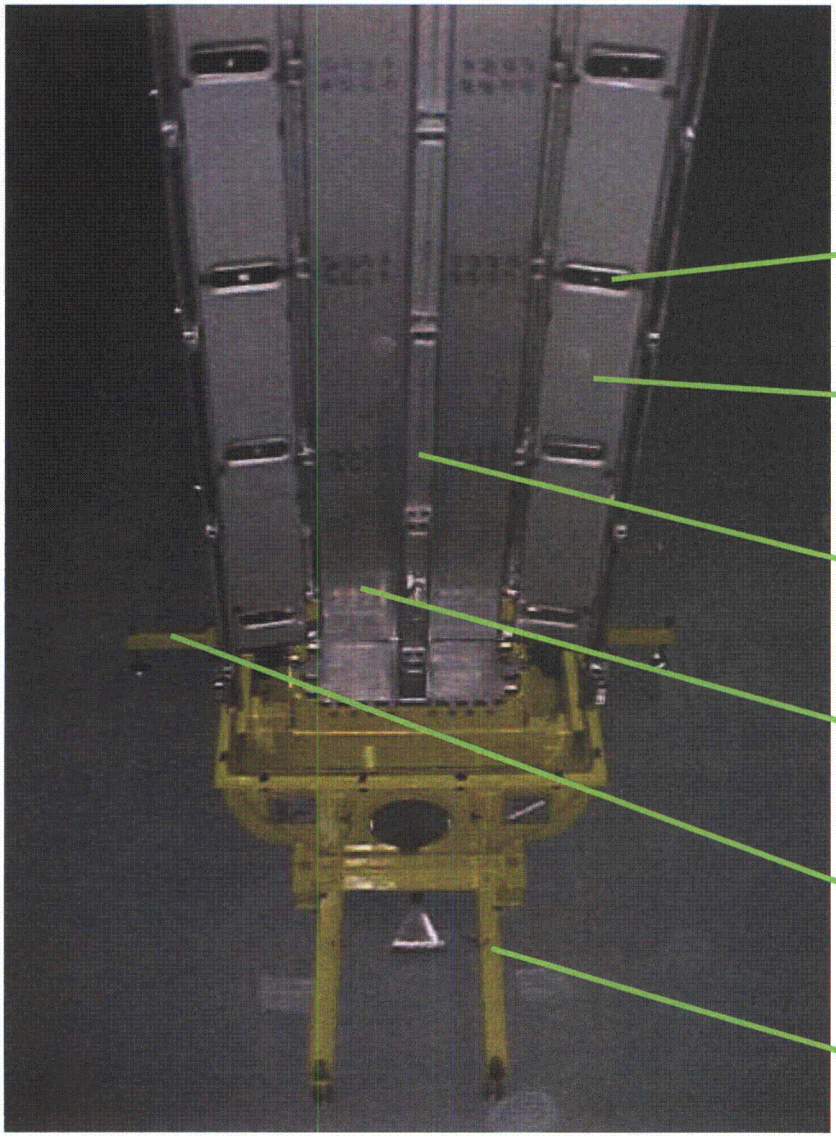
Internal system on vertical position
Grids clamping pads
Opened doors
Frame
Assemblies housing
Lateral stabilizing pads
Axial stabilizing pads

FRAMATOME ANP – Nuclear Fuel – Design and Sales Division

Calculation of the maximum thermal power of the transported fuel

- **Calculation of the maximum thermal power – TFJN 99.0449**

CALCULATION OF THE MAXIMUM THERMAL POWER OF THE TRANSPORTED FUEL

Thermal power released by the rods and/or REPU fresh fuel assemblies transported in the FCC and activity

1. Thermal power

To simply determine this parameter, irrespective of the FCC contents (assembly or box), the table below gives a generic value in W/KgU calculated with the ORIGEN-S code.

Isotopic composition (% by weight):

This isotopic composition is not that of the ASTM but it bounds the one used for the design of our products and to calculate the package activity.

Thermal power released for 1 KgU = 4.2F-4W.

2. Activity

Standard ASTM C996 specifies that the total gamma activity must be less than 440 BqMeV/gU and 3.3 Bq/gU for alpha activity. The average energy of the gamma-emitting fission products (Pm 147, Ce144, Cs137, Cs134, Sb125, Ru106, Tc99 and Sr90) ranges from 0.1 to 2 MeV, which corresponds to activity values extending from 220 to 4400 Bq/gU.

If we consider a single fictitious fission product with an activity level (alpha + gamma) of 5000 Bq/gU(very pessimistic hypothesis), the total activity will be 5000 x = 500 kg, or 2.5 10^9 Bq which remains under 3.0 10^9, the rounded value.

FRAMATOME ANP – Nuclear Fuel – Design and Sales Division

Calculation of the lifting points - FCC3 packaging

- **Verification of the sizing of the lifting points**
  NVPM DC 990663/EMA/CPA

AREVA

Lyon, le 11/10/2004

BORDEREAU DE DIFFUSION INTERNE No NOV-F2 40 INV

AFFAIRE : TFX – 12' FUEL ASSEMBLY CONTAINER–LIFTING POINT MECH

DOCUMENT(S) DIFFUSE(S)

Immatriculation	Indice	Titre	N? Interne
NVPMDC990663E0	B		F2 P 366

TFX 12' FUEL ASSEMBLY CONTAINER LIFTING POINT MECHANICAL VERIFICATION

DESTINATAIRES		***Objet***	***Nb exemplaires*** Document(s)	Bordereau(x)
PVED	C.BORAZZO – E.MESSINA	ATT	2	2
FFX	P.FAYE – P.FOSSARD	ATT	2	2
BCGD	.	ATT	1	1

10, rue Juliette Recamier 69456 LYON CEDEX 06 – Telephone : 04.72.74.82.21 – Telecopie : 04.72.74.84.90

FRAMATOME ANP

NOVATOME

OTP OR EOTP NUMBER	NUMBER OF PAGES : 35	CORPORATE NAME OF SUPPLIER :	
	NUMBER OFAPPENDICES : 1		
61X.C032AP1	CONFIDENTIALITY : N	ORDER NUMBER	REGISTRATION NUMBER OF SUPPLIER

CODE		DESIGNATION
CONCERN	F 2	**OPI FRAMATOME ANP**
TYPE	D A	**CALCULATION NOTE**
SUBJECT		
EQUIPMENT		

TITLE: **TFX - CONTAINER FOR 12' FUEL ASSEMBLIES - MECHANICAL VERIFICATION OF LIFTING POINTS**

SHORTENED TITLE: **TFX-12' FUEL ASSEMBLY CONTAINER-LIFTING POINT MECH.VERIFICATION**

INDEX	DATE	STATUS	WRITTEN BY NAME-SIGNATURE	VERIFIED BY NAME-SIGNATURE	APPROVED BY NAME-SIGNATURE	REVISIONS – OBSERVATIONS – AGREEMENTS REFERENCES AND DATES
B	01/10/2004	FINAL	BORAZZO	MESSINA	SPERANDIO	This document is the English version of the note NVPM DC 99.0663/B.
A	26/07/1999	FINAL	E. MESSINA	B. RIOU	M. SPERANDIO	First issue.

This document is the property of FRAMATOME ANP. It must not be reproduced, transmitted or disclosed without the prior written authorization of FRAMATOME ANP.

REGISTRATION NO. OF CLIENT:

INTERNAL REGISTRATION NO.: NVPM | DC | 99 | 0663 | E0 /

UNIT | TYPE | YEAR | CHRONO | THREE-LETTER CODE

10, rue Juliette Récamier 69456 LYON CEDEX 06 - Téléphone : 04.72.74.82.21 - Télécopie : 04.72.74.84.90

Modifications

Revision	Date	Modifications
A	26/07/1999	First issue.
B	04/06/2003	Modification of weld stress calculation, suppression of stacking analysis (matter of a separate note), and updating according to the 14 foot file.
B_E0	01/10/2004	This document is the English version of the note NVPM DC 99.0663/B.

Summary

The purpose of this study is to verify the acceptability of lifting of the containers intended for transporting FCC3, 12 foot UO_2 fuel assemblies, by the lifting points located on the upper shell while taking into consideration the increase in mass due to the modification of these containers.

The lifting calculations are made firstly by considering that the loads are taken up by two of the four lifting points which are diagonally-aligned, through a device which does not guarantee a uniform distribution of the load across the four strands.

Further calculations are made by taking into consideration a share of forces among the four lifting points, using strand angles of between 45° and 90°. For the study to be valid, an installation such as a lifting beam, making it possible to effectively distribute the load between the four legs, must be made available.

The study of the various design codes and rules considered for the lifting process, previously developed for 14 foot containers, fully re-applies to the 12 foot containers. The rules used are those of Code RCC-MR.

As regards the use of two lifting points, the excessive deformation and plastic instability criteria are fulfilled, due to the increased thickness of weld beads S8 and S14 (formerly identified as S7). This lifting method, however, is not recommended. Using a four lifting point device gives a minimum structural safety margin of 51%. For the bolts, the margins are smaller, 13%, mainly due to the preload (applied torque of 6 daN·m).

As far as fatigue is concerned, when using four lifting points, the margins, for both structure and welds, are wide, with damage equal to 0.11. For the bolts, an allowable number of 1362 tightening-lifting-loosening cycles is obtained.

A procedure for monitoring the weld beads and bolts should be set up, together with the replacing of the latter upon completion of 1300 tightening-lifting-loosening cycles, i. e. after 8 years of operation.

Contents

1. PURPOSE 10

2. INPUT DATA 10

2.1 Geometrical data 10

2.2 Materials 11

2.3 Loads 11

2.4 Regulations 12

3. CALCULATIONS 13

3.1 Method 13

3.2 Modelling 13

3.3 Boundary conditions 14

3.4 Modelling of the loads 15

4. RESULTS 15

4.1 Displacements 15

4.2 Stresses 15

4.2.1 Stresses in the shells 15

4.2.2 Stresses in the weld beads 16

4.2.3 Loads in the bolts 16

5. ANALYSIS 17

5.1 Choice of a code 17

5.2 Analysis programme 17

5.3 Excessive deformation and plastic instability 17

5.4 Fatigue 19

6. CONCLUSION 20

List of tables

Table 1 Comparative analysis of design methods

List of figures

Figure 1 Complete model - 2 lifting points

Figure 2 One-quarter model - 4 lifting points

Figure 3 Identification, length, and thickness of weld beads throat section

Figure 4 Resultant displacements

Figure 5 Lower surface iso-stresses – 2 lifting points

Figure 6 Mid thickness iso-stresses – 2 lifting points

Figure 7 Upper surface iso-stresses – 2 lifting points

Figure 8 Lower surface iso-stresses – 4 lifting points at 45°

Figure 9 Mid thickness iso-stresses – 4 lifting points at 45°

Figure 10 Upper surface iso-stresses – 4 lifting points at 45°

Figure 11 Lower surface iso-stresses – 4 lifting points at 90°

Figure 12 Mid thickness iso-stresses – 4 lifting points at 90°

Figure 13 Upper surface iso-stresses – 4 lifting points at 90°

Figure 14 Positions of the most loaded weld beads

List of appendices

Appendix 1 ANALYSIS OF WELDED JOINTS

List of references

(1) Note NVPM DC 99.0150/C
TFX – Conteneur pour assemblages 14 pieds – Vérification du dimensionnement des prises de levage (TFX - Container for 14' fuel assemblies – Mechanical verification of lifting points).

(2) Note TFX DC 2213/A
Conteneur de transport des assemblages de combustible UO_2 FCC3 – Vérification du dimensionnement des oreilles de levage et gerbage (FCC3, UO_2 fuel assembly transportation containers – Verification of lifting points and stacking).

(3) Plan 229 K 100/D
Container for 2 UO_2 fuel assemblies – 12 foot model – 17 x 17 – Closed assembly.

(4) Plan 229 K 105/D
Container for 2 UO_2 fuel assemblies – 12 foot model – 17 x 17 – Lower shell.

(5) Plan 229 K 110/F
Container for 2 UO_2 fuel assemblies – 12 foot model – 17 x 17 – Upper shell.

(6) Plan 229 K 106/B
Container for 2 UO_2 fuel assemblies – 12 foot model – 17 x 17 – Skid frame.

(7) Plan 229 K 4021/B
Fresh fuel transportation container – 12 foot or 14 foot uranium assembly – Special-purpose bolt.

(8) French Standard NF EN 10025
Produits laminés à chaud en aciers de construction non alliés (Hot rolled products in non-alloyed construction steels).

(9) French Standard NF EN 20898-1
Caractéristiques mécaniques des elements de fixation (Mechanical characteristics of fasteners).

(10) Document FS.046/DC/01
Material certificates.

(11) Document 229 CSY 7613 – Sheets 35 to 47
Cellier's Welding data collection.

(12) Regulations regarding transportation of radioactive material -1996 Edition – Requirement n° ST1-IAEA.

(13) French design code CM66
Règles de calcul des constructions en acier (Rules for the design of construction steels).

(14) NFP 22-470 Standard
Metallic construction – Welded assemblies.

(15) FEM-1001 Regulations
3rd Edition – European Handling Federation – Section 1 – Heavy lifting and handling apparatus.

(16) KTA 3905 Regulations
Nuclear Commission Safety Regulations – Lifting points for loads in nuclear power plants.

(17) RCC-MR Code. May 1993 Edition
Design and construction rules for the mechanical components of RNR nuclear islands.

(18) Code 10 CFR 71
Code of Federal Regulation - Packaging and transportation of radioactive material.

(19) SYSTUS programme, version SPK 233F
User manual – Revision B.

(20) Roark's Formulas for stress and strain, Vol. I, 6th Edition.

(21) UDD 856 film
Listing archives.

1. PURPOSE

The purpose of this study is to verify the acceptability of lifting of the containers intended for transporting FCC3, 12 foot UO_2 fuel assemblies, by the lifting points located on the upper shell while taking into consideration the increase in mass due to the modification of these containers.

The lifting calculations are made firstly by considering that the loads are taken up by two of the four lifting points which are diagonally-aligned, through a device which does not guarantee a uniform distribution of the load across the four strands.

Further calculations are made by taking into consideration a share of forces among the four lifting points, using strand angles of between 45° and 90°. For the study to be valid, an installation such as a lifting beam, making it possible to effectively distribute the load among the four legs, must be made available.

The present version of the note takes into account the new minimum thickness values of the weld beads between the lifting boxes and the upper half-shell of the container, as shown in reference 3 drawing.

The study of the various design codes and rules considered for the lifting process, previously developed for 14 foot containers (reference 1), fully re-applies to the 12 foot containers.

Reference 2 sets out the specifications of this study.

Remark: in the event that the lifting points break, the safety of the transported material is not covered by this study, but is matter of separate analyses in other studies.

2. INPUT DATA

2.1 Geometrical data

This is defined on reference 3 to 7 drawings.

The container is made of two, lower and upper, half-shells, bolt-assembled at flanges mounted in the horizontal diametric plane of the container.

The overall dimensions of the 12 foot container are as follows:

- length : 4923 mm,
- diameter of shells : 1054 mm,
- total height : 1213 mm,
- total width : 1141 mm.

2.2 Materials

The containers are made out of E36 steel. Its properties are given in reference 8 standard.

The mounting bolts on the two half-shells are class 10.9 treated 42 CD4 steel. Its properties are given in reference 9 standard.

The other properties, not covered by references 8 and 9, are taken from Appendix A3 of RCC-MR code (reference 17), 12S and 11B for E36 steel and 42 CD4 steels respectively. The values of the properties at 20°C are presented in the table below.

Steel properties at an ambient temperature of 20°C

		E 36	42 CD4
Young's modulus	(MPa)	209000	209000
Poisson's coefficient		0.3	0.3
Density	(kg/m^3)	7850	7850
Min. yield strength, R_e	(MPa)	355	940
Min. tensile strength, R_m	(MPa)	490 (510 for e < 3 mm)	1040

In terms of weld beads, references 10 and 11 show that the mechanical properties of the welding material are at least equal to those of the base metal.

Operating temperature ranges between –20°C and +70°C. The changes in properties over this range, in relation to 20°C, are negligible, thus we make use of the properties at 20°C.

2.3 Loads

The container is FCC version:

- total mass : 4500 kg,
- upper shell mass : 500 kg,
- lower shell mass : 750 kg,
- internal equipment mass : 3250 kg.

3 cases, outlined below, have been considered for lifting analysis.

Case 1

The loads are taken up by 2 of the 4 lifting points on the upper shell, which are diagonally aligned. The resultants forces are at a 45° angle, in a vertical plane parallel to the longitudinal axis of the container and at a 10° angle in a plane perpendicular to the aforementioned axis. These conditions also apply when lifting the container with a 4-strand sling where only 2 of the strands are supposed to bear the load. This case envelopes the lifting by a system to distribute the forces over the 4 lifting points.

Case 2.1

The container is lifted using 4 strands. The loads are supported by the 4 lifting points. The resultant force is in the vertical plane parallel to the longitudinal axis of the container and forms an angle of 45° with the vertical.

Case 2.2

The container is lifted with 4 strands. The loads are supported by the 4 lifting points. The resultant force is vertical.

In order to account for the dynamic amplification effects of the lifting, FEM rules, reference 15, are used. The maximum lifting speed of 6 m/min gives rise to an amplification factor of 1.15 on the weight.

Regarding the bolted connection, the study covered by reference 1 note shows that the stresses in the bolts caused by the weight are small compared to the stresses resulting from the preloading. As a result, only one situation, with a preload of 6 daN·m per bolt, has been considered; the two flanges can not rotate in relation to each other.

2.4 Regulations

The regulations used are those applicable to the transportation of radioactive materials (reference 12) and specify the general requirements concerning packages.

The container analysis carried out in this study focuses, in particular, on the strength of the hooking points, the lifting box welded joints, and the half-shell connecting bolts.

The following types of failure have been studied:

- excessive deformation and plastic instability,
- fatigue.

The study of the various design codes and rules that could be applied to the lifting process, previously used for the 14 foot containers (reference 1) has been fully re-applied and incorporated into this study.

The codes reviewed were:

- CM66 , reference 13,
- NFP 22-470 , reference 14,
- F.E.M. , reference 15,
- KTA 3905 , reference 16,
- RCC-MR , reference 17,
- 10CFR , reference 18.

3. CALCULATIONS

3.1 Method

The calculations are made using the SYSTUS finite-element programme (reference 19) assuming a linear elastic behaviour of materials.

3.2 Modelling

Two three-dimensional models are used, made of 3 or 4 node, thin shell elements. The first mesh, as the use of just two lifting points leads to a lack of symmetry, represents the whole container. The second, models just one-quarter of the container and is used where four, symmetrical lifting points are used. Actually, the container is not perfectly symmetrical, as the lifting boxes are of different lengths (850 mm on the one side of the container and 760 mm on the other). However, the local geometry of the hooking points is strictly identical and as the loads are applied just within these areas, thus asymmetry has no effect on the results. A representative length of 850 mm is selected.

The 1st mesh is made up of 17058 nodes and 16778 elements and the 2nd of 4363 nodes and 4194 elements. They are shown in Figures 1 and 2.

They take into account the modelling of the hooking points, the effective lengths of all the lifting box weld beads and stiffening L-beams of the upper shell and the representation of the bolted connections. Bead lengths are given in Figure 3

The lower skid frames, given their rigidity, are not represented.

3.3 Boundary conditions

For the complete model, at the diagonally-aligned box holes, we assume a restrain in the Z' axis, 45° to the horizontal and 10° to the vertical plane, parallel to the longitudinal axis of the container. To prevent tilting around the Y axis the displacements UX and UY of the 2 nodes located in the vertical axis of symmetry of the container are blocked. To prevent global rotation around Z, the displacement UY of a flange node located in the plane (XOZ) is blocked.

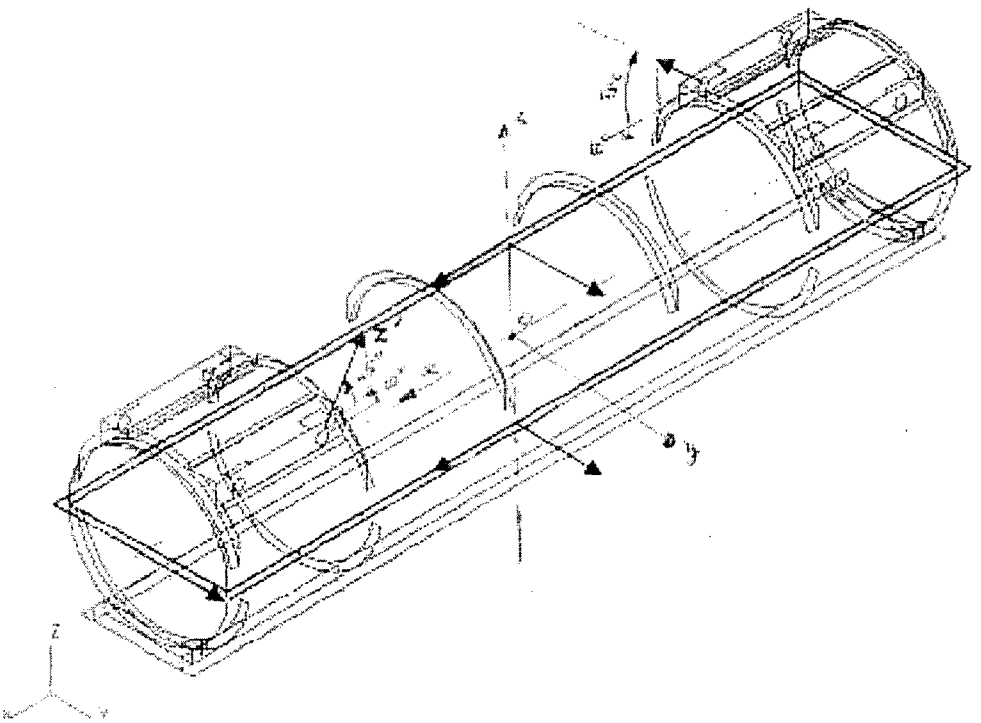

For the one-quarter model version, the symmetry conditions are considered in relation to the planes (XOZ) and (YOZ).

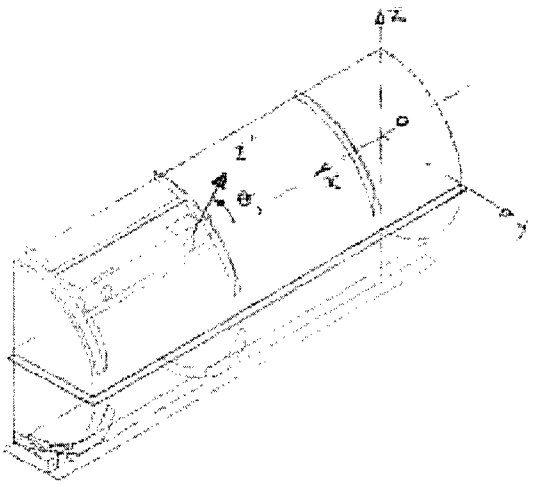

Therefore for plane (XOZ) the displacements and rotations are blocked : UY = 0, and $\theta_x = \theta_z = 0$,
and for plane (YOZ) the displacements and rotations are blocked : UX = 0 and $\theta_y = \theta_z = 0$.

At the lifting point, we take a restraint, in direction Z' making an angle of either 45° or 90° with the horizontal line, where $\vec{Z'}$ lies in a plane parallel to (XOZ).

3.4 Modelling of the loads

The loads to be taken into consideration are presented in § 2.3.

In the calculations, the acceleration due to gravity g = - 9.81 m/s^2 is introduced in order to get the weight. The densities of the various structural components are corrected in order to obtain the exact masses.

4. RESULTS

As regards the use of 4 lifting points, there is little difference between the results obtained for the two sling angles. The stresses in the welded joints are at their greatest in the 90° case. The two examined situations should therefore cover all angles between 45° and 90°.

4.1 Displacements

The maximum displacements obtained are presented in Figure 4. These are small: the maximum bow obtained in the bottom central section of the container is equal to 0.6 mm when using 4 lifting points and 0.8 mm when using just 2 lifting points.

Remark: these values are given without dynamic amplification.

4.2 Stresses

4.2.1 Stresses in the shells

By way of example, Figures 5 to 13 present, in the form of iso-values, the von Mises equivalent stresses obtained in the shell elements (without dynamic amplification of 1.15). It should be noted that these are mean values, averaged at the nodes of the elements, and that the maximum stresses obtained in the elements can be slightly higher. The maximum values obtained (without dynamic amplification) are:

		2 lifting points	4 lifting points
♦ in membrane	:	σ = 118 MPa	σ = 67.5 MPa
♦ in membrane plus bending	:	σ = 176 MPa	σ = 70.0 MPa

They are located at the lifting point and the stiffening L-beam at its connection with the lifting box.

4.2.2 Stresses in the weld beads

The weld beads in the lifting area are partial-penetration fillet welds. The stresses are computed at the throat cross-sectional plane, based on the element forces.

The method used is explained in Appendix 1.

The minimum throat dimensions of the three types of beading concerned are as follows (according to reference 3 drawing):

- circumferential welds on the L-beam, S14 (previously S7): a = 3 mm,
- longitudinal welds on the box, S8: a = 3 mm,
- inclined welds between box and L-beam, S9: a = 3.5 mm,

The maximum equivalent stresses obtained (without dynamic amplification) are:

	Location	Membrane	Membrane + bending
2 lifting points	Weld S14	58.1 MPa	58.1 MPa
	Weld S8	24.1 MPa	65.0 MPa
	Weld S9	45.4 MPa	74.7 MPa
4 lifting points	Weld S14	34.7 MPa	34.7 MPa
	Weld S8	33.5 MPa	50.5 MPa
	Weld S9	33.7 MPa	41.3 MPa

The locations are identified in Figure 14.

4.2.3 Loads in the bolts

The tensile forces in the bolts resulting from external forces (lifting only) are minor. The maximum values, for the most heavily loaded bolts (without dynamic amplification) are:

- 2 lifting points : F = 3091 N,
- 4 lifting points : F = 2107 N.

The force resulting from the preload alone is 25200 N. It is calculated as a function of the torque (6 daN·m) according to Appendix A6 of RCC-MR.

5. ANALYSIS

5.1 Choice of a code

The analyses carried out in reference 1 are fully applicable to this case.

The weld beads are the most sensitive to the analyse results. We have examined the various design code methods likely to suit the container analysis (see list in § 2.4).

A comparative analysis of the methods is presented in Table 1. Code RCC-MR has been chosen, for the following reasons:

- the formula for the equivalent stress in the welded joints is the most severe,
- the welded joint factor, n = 0.5 (< 0.8 of KTA) is envelope,
- it is a detailed nuclear code that also offers the possibility of analysing the shells and bolted assemblies,
- it takes into account plastic instability in the allowable stresses.

Remark: Code 10 CFR71, reference 17, is not a design code. However, as far as the lifting points are concerned, it stipulates that a minimum safety coefficient of 3 must be used with respect to yield stress. This value is covered by the RCC-MR analysis. The same conclusion would apply when using an American code such as the ASME, which contains the same safety coefficients.

5.2 Analysis programme

The shells and weld beads are analysed in accordance with article RB 3800 which refers to RB 3200:

- RB 3851 : excessive deformation and plastic instability,
- RB 3861 : fatigue.

The bolted connections are analysed in accordance with article RB 3280 and Appendix A6.

5.3 Excessive deformation and plastic instability

The analysis results are shown for the maximum stresses obtained in the various cases examined, using a dynamic amplification of 1.15 (see § 2.3).

- For the shells, we must limit primary membrane stresses $P_m < S_m$ and primary membrane plus bending stress $P_L + P_b < 1.5 \cdot S_m$.

  We obtain $S_m = \text{Min}\{2/3\ R_e;\ 1/3\ R_m\} = 163$ MPa.

The comparisons are:

	2 lifting points	4 lifting points	Allowable stress (MPa)	Margin (%)
P_m (MPa)	136	77.6	163	17 / 52
$P_L + P_b$ (MPa)	202	80.5	244.5	17 / 67

- For the weld beads, $P_m < n \cdot J_m \cdot S_m$ and $P_L + P_b < 1.5 \cdot n \cdot J_m \cdot S_m$ with:
  - n = 0.5: fillet weld coefficient,
  - J_m = 1: properties of the welding metal at least equal to those of the base metal (see reference 9).

The comparisons are:

		P_m (MPa)	Allowable stress (MPa)	Margin (%)	$P_L + P_b$ (MPa)	Allowable stress (MPa)	Margin (%)
2	Weld S14	66.8	81.5	18	66.8	122.3	45
lifting	Weld S8	27.8	81.5	66	74.8	122.3	39
points	Weld S9	52.2	81.5	36	86.0	122.3	30
4	Weld S14	40.0	81.5	51	40.0	122.3	67
lifting	Weld S8	38.5	81.5	53	58.0	122.3	53
points	Weld S9	38.8	81.5	52	47.5	122.3	61

In terms of using 2 lifting points, the stresses are still acceptable once the welds have been strengthened, but the margins are much smaller than when using 4 lifting points: therefore, this type of lift is not recommended. Equipment that guarantees the uniform distribution of the loads among the 4 lifting points is required.

- Analysis of the bolted connection.

  A bolt preload with torque of 6 daN·m is taken into consideration. The M12 bolts are class 10.9 treated, 42CD4 steel.

  We obtain S^B_m = Min {1/4 R_e; 1/5 R_m} = Min {235 MPa; 208 MPa}.

  We consider that the force is the result of the combination of the force obtained by the preload and the force resulting from the lift.

  We obtain, with 2 lifting points, at the most tensioned bolt F_{lift} = 3555 N, i.e. stress σ_n = 46.7 MPa (dynamic amplification included), to which we add the preload F_0 = 25200 N. A global stress of 377.4 MPa is obtained.

  In the case of 4 lifting points we obtain, for the most tensioned bolt, F_{lift} = 2423 N, i.e. stress σ_n = 31.8 MPa (dynamic amplification included), to which we add the preload. A global stress of 362.5 MPa is obtained.

Comparisons with allowable stresses:

	$(\sigma_m)_{fictitious}$ (MPa)	Allowable stress S^B_m (MPa)	Margin (%)	σ_m (MPa)	Allowable stress $2 \cdot S^B_m$ (MPa)	Margin (%)
2 lifting points	46.7	208	77	377.4	416	9
4 lifting points	31.8	208	85	362.5	416	13

The limits are observed with small margins.

5.4 Fatigue

Given that it is not recommended that lifting operations be carried out using just 2 lifting points, the verification of fatigue is solely focused on the use of 4 lifting points.

The number of lifting cycles is based on 20 years of usage of the container at a rate of 80 deliveries per year. We consider that a delivery corresponds to 12 cycles, amounting to 20000 cycles in total.

For the bolts we consider the tightening-lifting-loosening cycles and lifting only sub-cycles.

The loading cycles are represented in the following diagram.

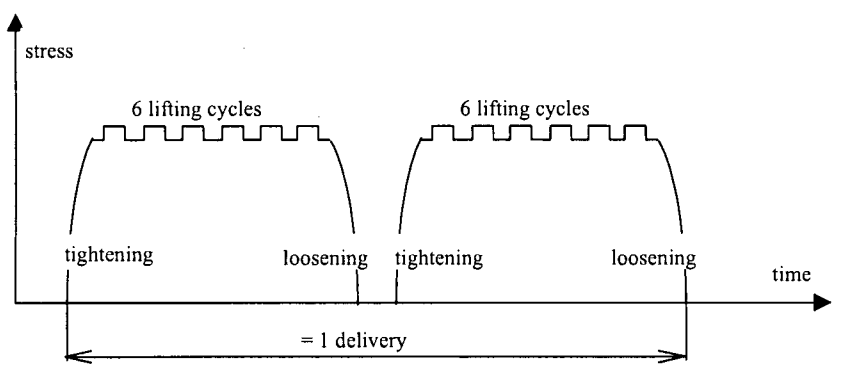

- For the weld beads we consider, in line with article RB 3861.12 a factor of 4 for the stress, i.e., a maximum stress of 232 MPa. In the absence of fatigue curves for E36 steel in RCC-MR, Appendix A3, we use those of A48 steel (group 12S), the latter supposedly less resistant than E36 steel. The enforcement of the rules leads to the following fatigue damage:

  N_{adm} = 190000 cycles $\Rightarrow$ V = 0.11.

  The maximum damage is therefore slight and well below 1.

- For the bolts we consider a stress concentration factor of 3.77, calculated according to reference 20 document. The fatigue curves are defined in Appendix A3-11B (bolting steel).

  The application of the rules leads to the following fatigue damage:

  - lifting sub-cycle: $\Delta\sigma = 120$ MPa $\Rightarrow N_{adm} = 46 \cdot 10^6$ cycles $\Rightarrow V_1 = \dfrac{20000}{46 \cdot 10^6} = 0.0004$,
  - full cycle: $\Delta\sigma = 1367$ MPa $\Rightarrow N_{adm} = 1362$ cycles.

  It should be noted that most of the fatigue damage is due to the tightening-lifting-loosening cycles. It is therefore necessary to replace the bolts at fixed intervals of at least 1300 tightening-lifting-loosening cycles.

  Remark:
  - the calculated damages do not take into consideration the accumulated damage of the old containers,
  - we assume that the bolts are new.

6. CONCLUSION

An examination of the acceptability of lifting for 12 foot assembly containers was carried out, in accordance with Code RCC-MR.

The rules of this code envelope those of the other codes examined.

The current version of this note takes into account the new minimum weld bead thickness values applicable to the joints between the lifting boxes and the upper half-shell of the container.

Regarding the use of 2 lifting points, the excessive deformation and plastic instability criteria are fulfilled after increasing the thickness of welds S8 and S14 (formerly S7). This lifting method is, however, not recommended. When using a device with four lifting points, the structure observes the criteria with a minimum margin of 51%.

With regard to the bolts, the margins are smaller, 13%. This is mainly the result of the preload (torque of 6 daN·m).

In terms of fatigue, when using 4 lifting points, the margins are relevant for both the structures and the weld beads, with a damage of 0.11. For the bolts, an acceptable number of 1362 tightening-lifting-loosening cycles is obtained.

A procedure for monitoring the weld beads and bolts should be established, together with a means of replacing the latter every 1300 tightening-lifting-loosening cycles, i.e. after 8 years of operation.

Table 1

Comparative analysis of design methods

Code	Calculation of stress in the beads	Loading and safety coefficient	Allowable stress	Field of application
CM66	$\sigma^2 = \sigma_\perp^2 + 1.8(\tau_\perp^2 + \tau_{//}^2)$	Dead loads (weight) p = 1.33. Live loads or dynamic amplification p = 1.5. Dynamic amplification: such as FEM ψ = 1.15. In total : $c=1.33 \cdot P_0+1.5 \cdot 0.15 \cdot P_0 = 1.56 \cdot P_0$.	$\alpha^2.\sigma_e^2$, with: σ_e= yield strength, α : welding coefficient: = 1, for a ≤ 4 mm, = 0.8(1+1/a), for a > 4 mm.	Steel frame construction.
NFP 22-470 (corresponds to Addendum 80 of CM66)	$\sigma = \sqrt{\sigma_\perp^2 + 3(\tau_\perp^2 + \tau_{//}^2)}$	Idem CM66.	k σ_e, with welding coefficient: k = 0.7 for E24, k = 0.85 for E28, k = 1 for E36.	Steel frame construction.
FEM	$\sigma = \sqrt{\sigma_\perp^2 + 2(\tau_\perp^2 + \tau_{//}^2)}$	Case I of FEM. $C= \gamma_c \cdot \psi \cdot S_L$, with: γ_c = 1.2 (lifting device), ψ (dynamic amplification) = 1.15 for a lifting speed of 6 m/min, S_L = stress resulting from the load.	$\sigma_a = \sigma_e / 1.5$	Lifting devices.
KTA 3905, according to DIN 18800	$\sigma = \sqrt{\sigma_\perp^2 + \tau_\perp^2 + \tau_{//}^2}$	Reinforced requirements: $C= 1.25 \cdot \psi \cdot P_0$, with: dynamic amplification ψ = 1.8 (for lesser values justification is required).	k σ_e / ν_M, with welding coefficient k = 0.8 for fillet weld, ν_M = material strength parameter.	Load lifting points in nuclear power plants.
RCC-MR RB 3851.12	$\sigma = \sqrt{\sigma_\perp^2 + 3(\tau_\perp^2 + \tau_{//}^2)}$ In the area of the welded joint, the membrane and membrane + bending stress are to be determined	$C= \psi \cdot P_0$, with: dynamic amplification ψ = 1.15 (as for FEM).	S_m=min(2/3·R_e ; 1/3·R_m), $\sigma_m \leq n \cdot J_m \cdot S_m$, $\sigma_{m+b} \leq 1.5 \cdot n \cdot J_m \cdot S_m$, with n = 0.5 (fillet weld) and J_m = 1 (welding metal properties at least equal to those of the base metal).	Mechanical components of RNR nuclear islands.
10 CFR § 71.45			$\sigma_a = \sigma_e / 3$	Transportation of radioactive materials.

Figure 1

Complete model - 2 lifting points

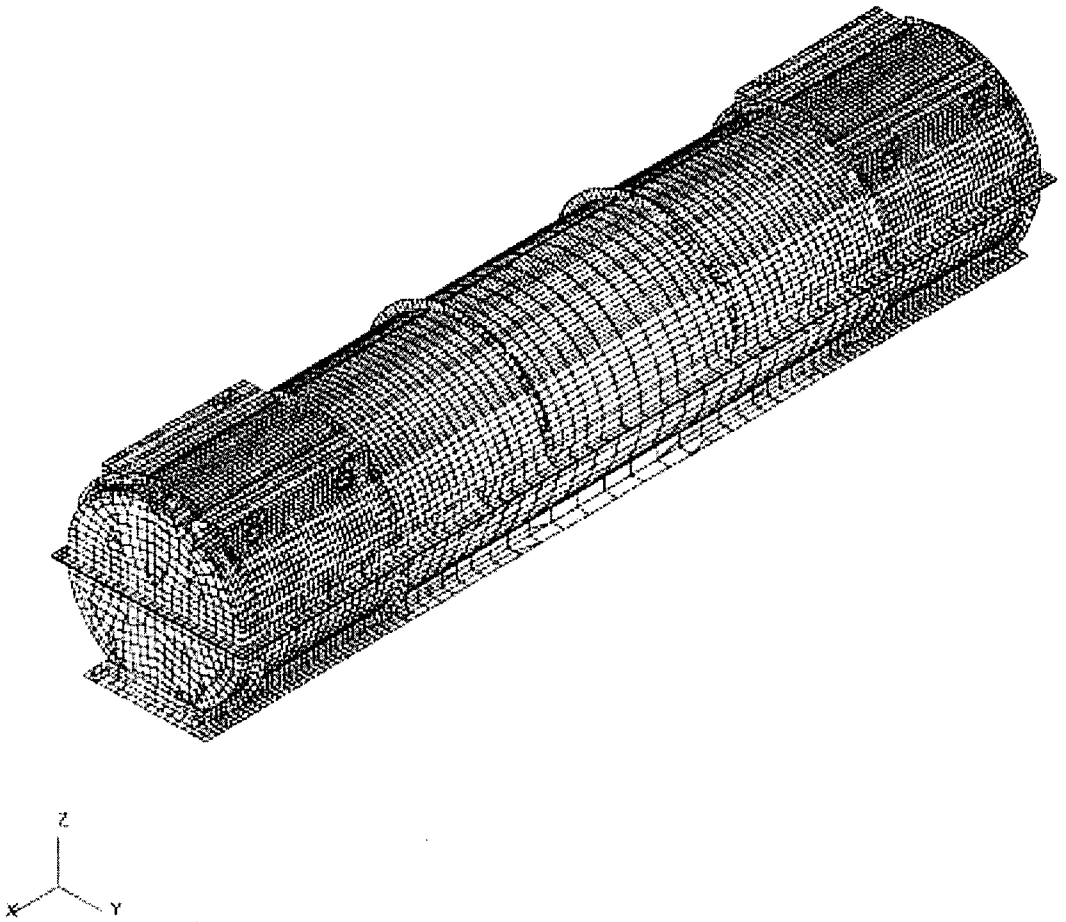

Figure 2

One-quarter model - 4 lifting points

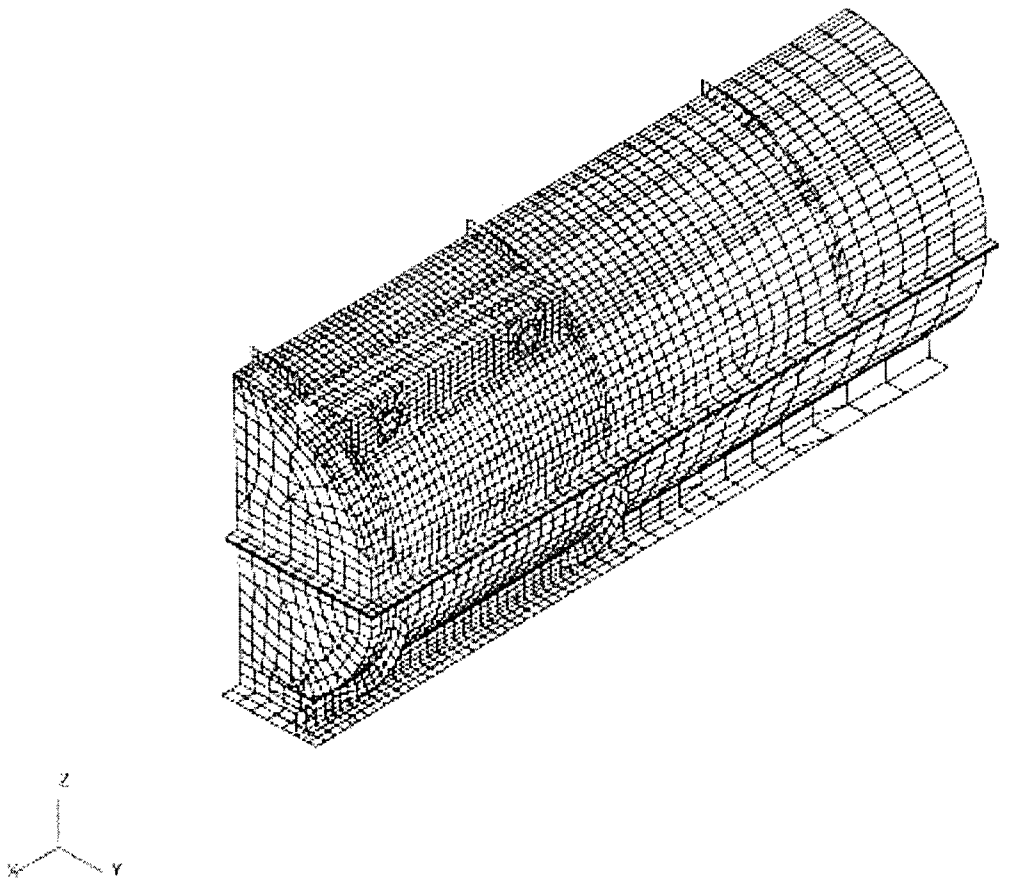

Figure 3

Identification, length, and thickness of weld beads throat section

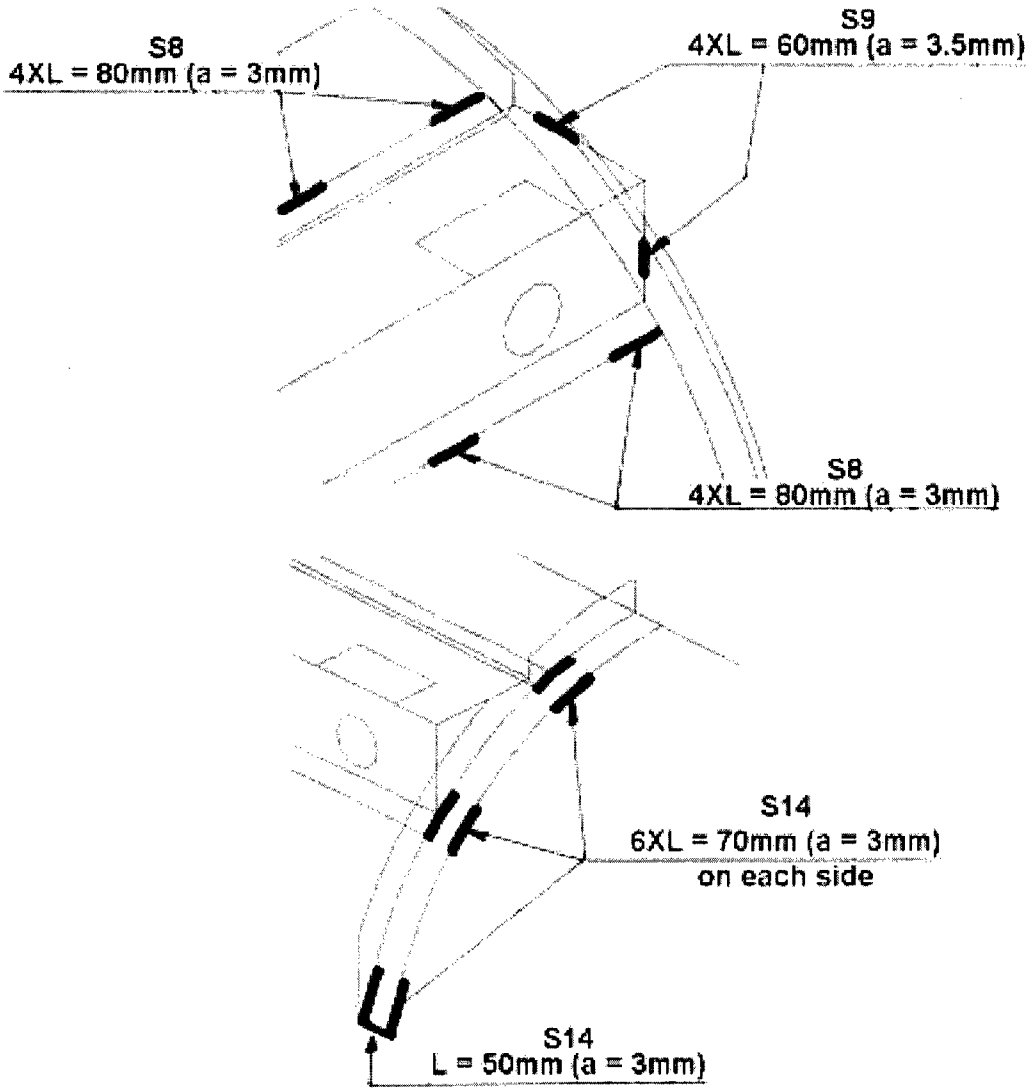

Figure 4
Resultant displacements

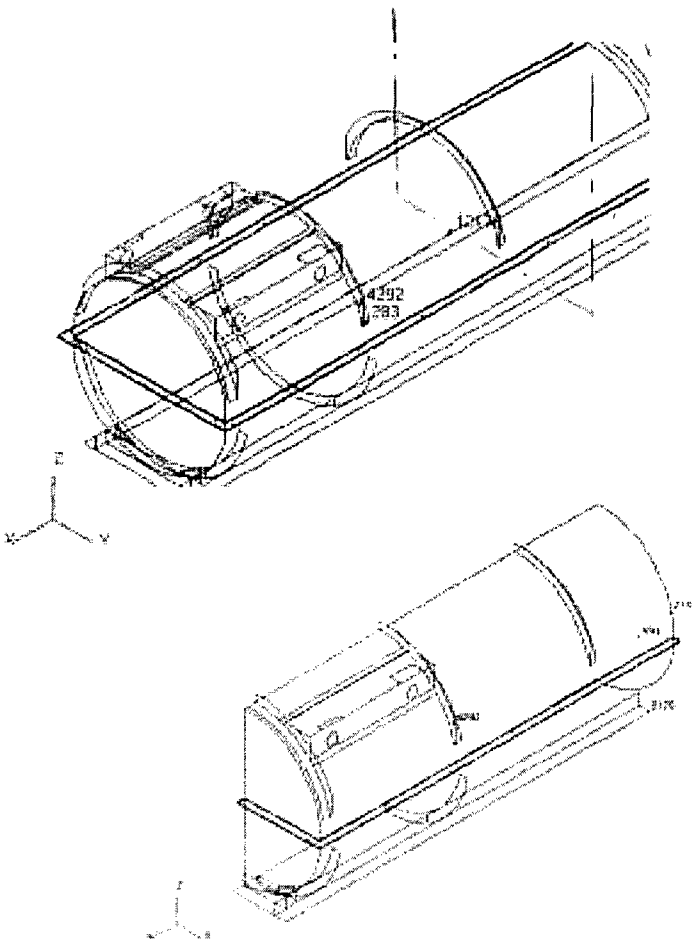

		Node	Direction	mm
4 lifting points	45° lifting force	4292	X	-0.07
		215	Y	-0.45
		2170	Z	-0.56
	90° vertical force	4292	X	-0.05
		490	Y	-0.52
		2170	Z	-0.56
	2 lifting points	4292	X	-0.08
		283	Y	-0.62
		12170	Z	-0.83

Figure 5

Lower surface iso-stresses – 2 lifting points

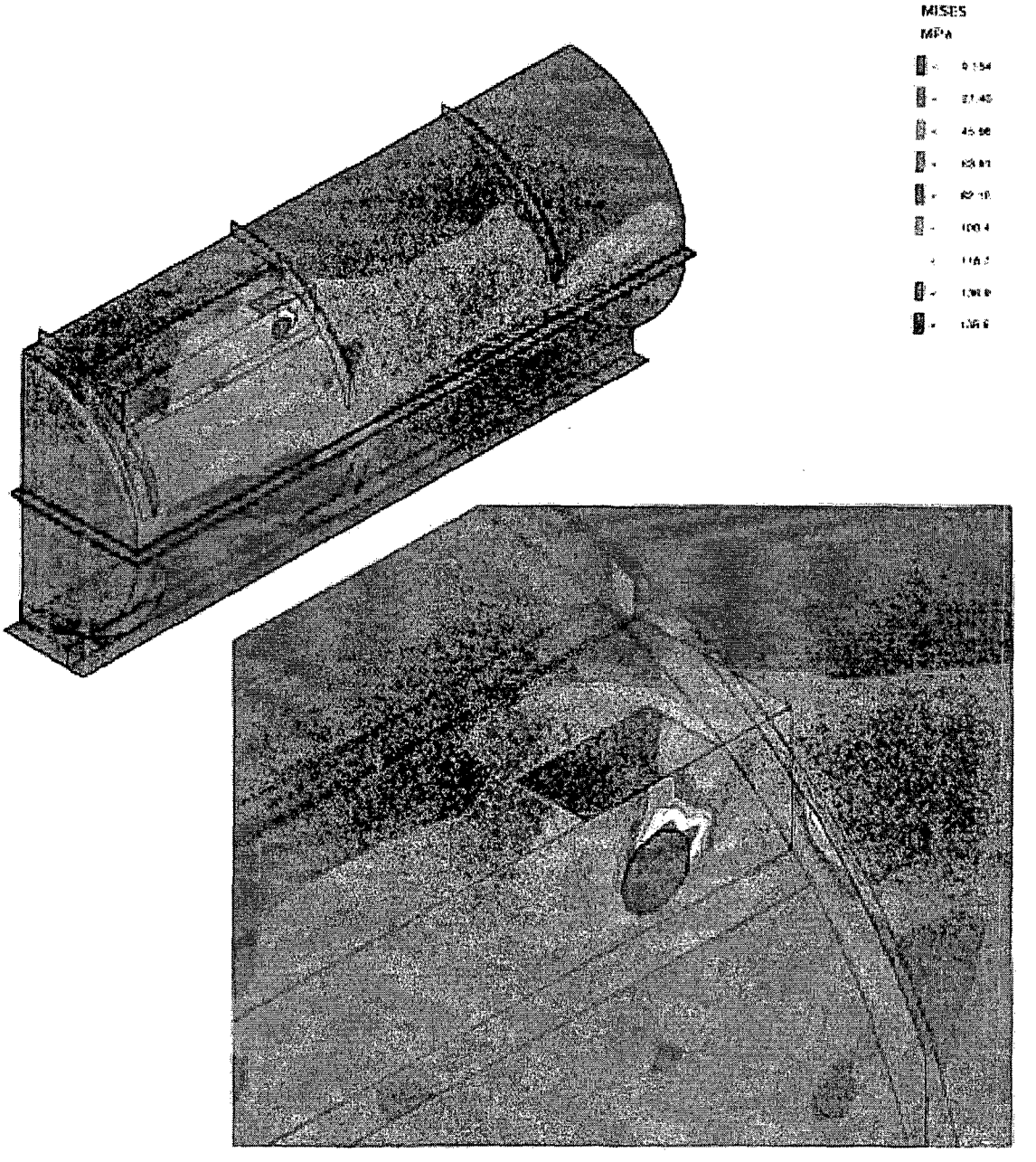

LOWER SURFACE ISO-STRESSES -
2 STRANDS AT 45° - DEADWEIGHT – MASS 4500 KG

Figure 6

Mid thickness iso-stresses – 2 lifting points

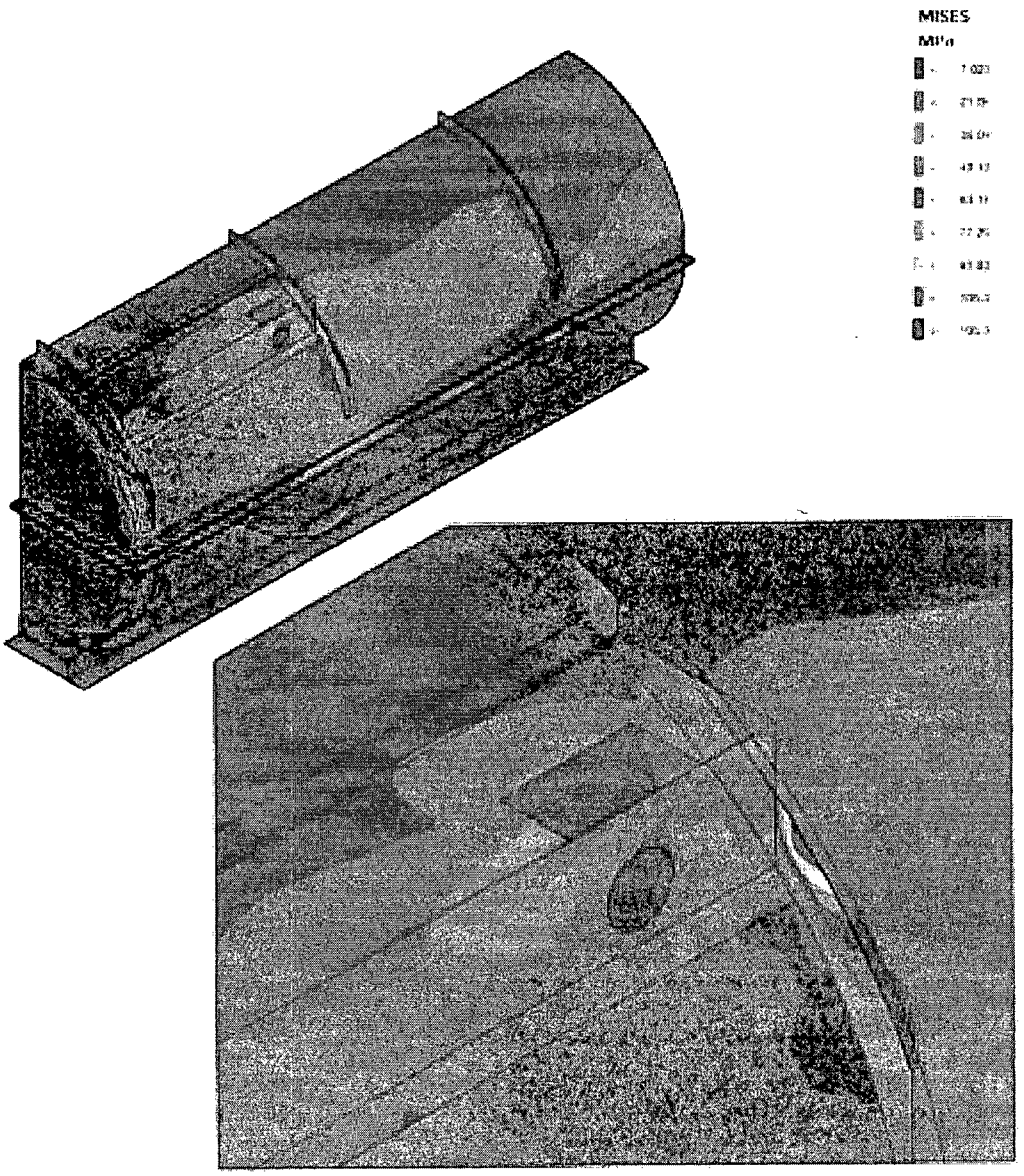

MID THICKNESS ISO-STRESSES -
2 STRANDS AT 45° - DEADWEIGHT – MASS 4500 KG

Figure 7

Upper surface iso-stresses – 2 lifting points

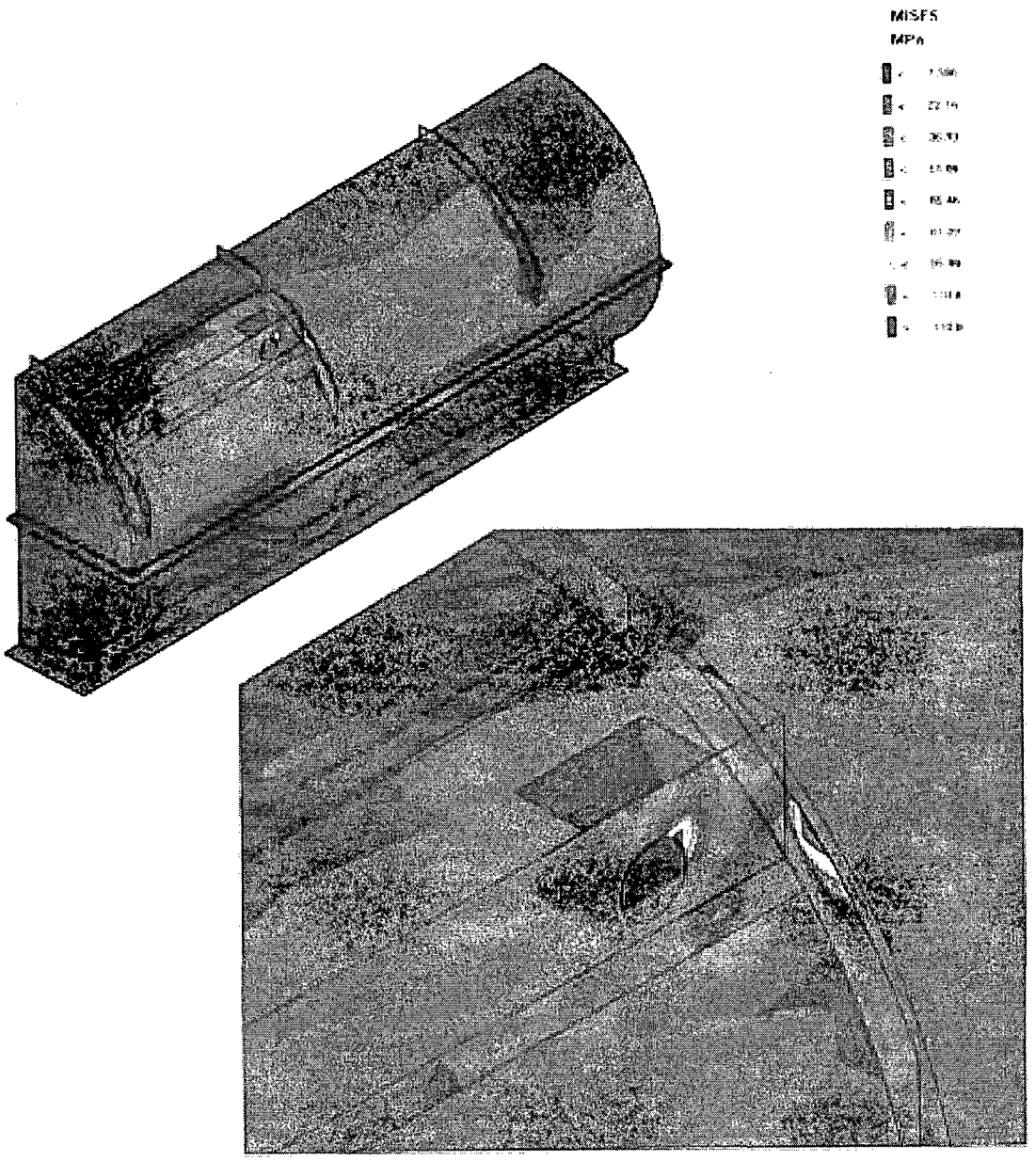

UPPER SURFACE ISO-STRESSES -
2 STRANDS AT 45° - DEADWEIGHT – MASS 4500 KG

Figure 8

Lower surface iso-stresses – 4 lifting points at 45°

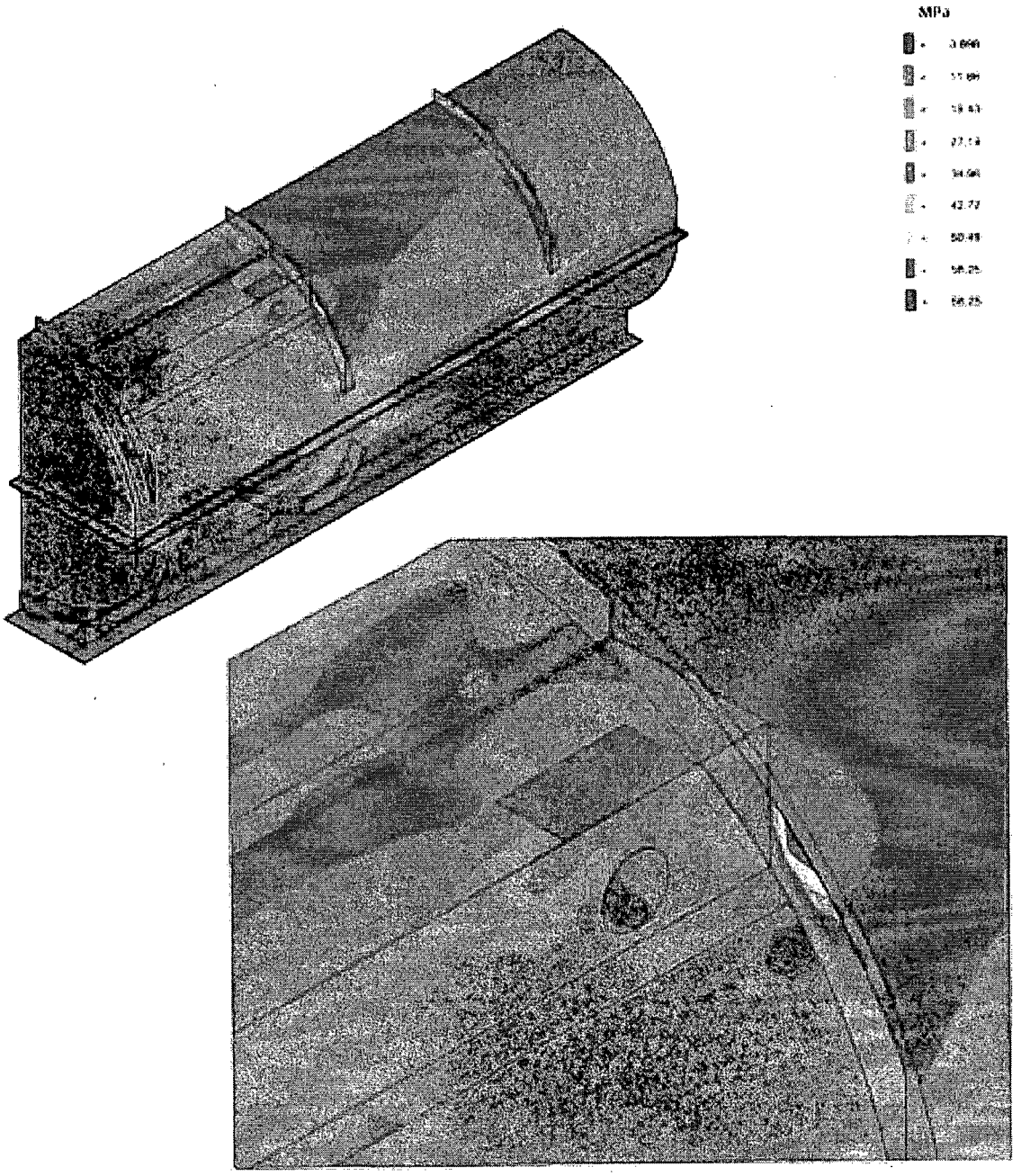

LOWER SURFACE ISO-STRESSES -
4 STRANDS AT 45° - DEADWEIGHT – MASS 4500 KG

Figure 9

Mid thickness iso-stresses – 4 lifting points at 45°

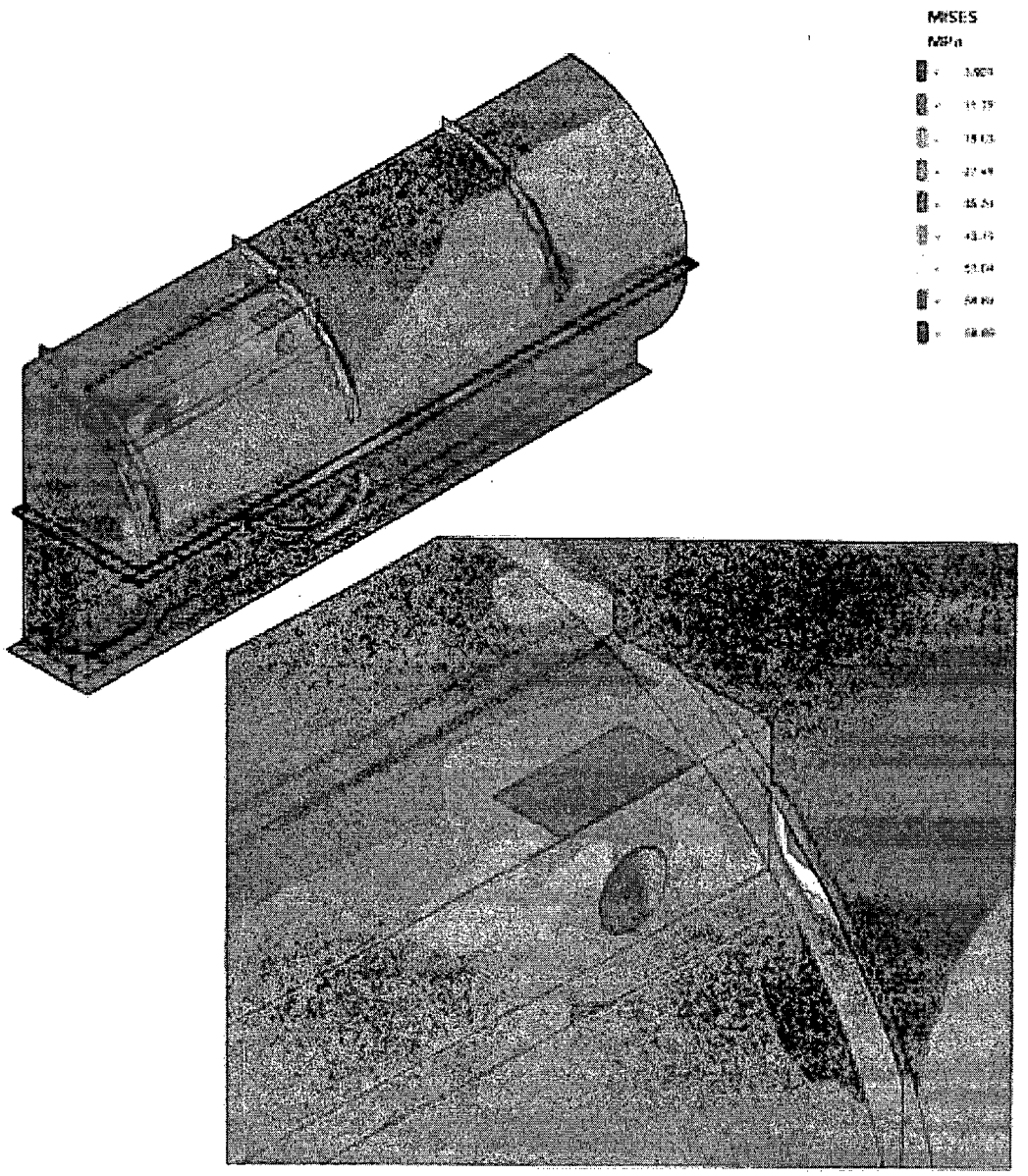

MID THICKNESS ISO-STRESSES -
4 STRANDS AT 45° - DEADWEIGHT – MASS 4500 KG

Figure 10

Upper surface iso-stresses – 4 lifting points at 45°

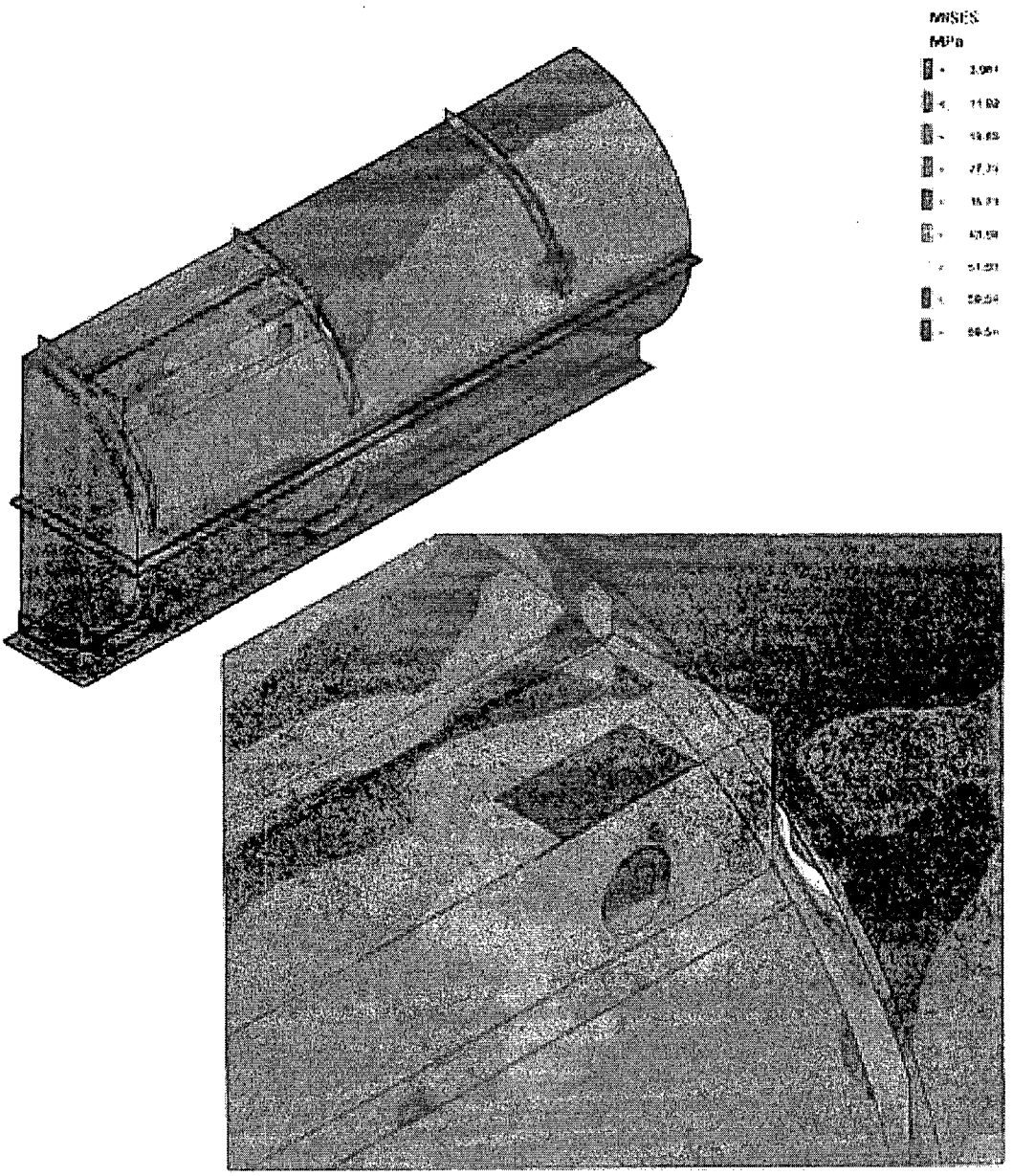

UPPER SURFACE ISO-STRESSES -
4 STRANDS AT 45° - DEADWEIGHT – MASS 4500 KG

Figure 11

Lower surface iso-stresses – 4 lifting points at 90°

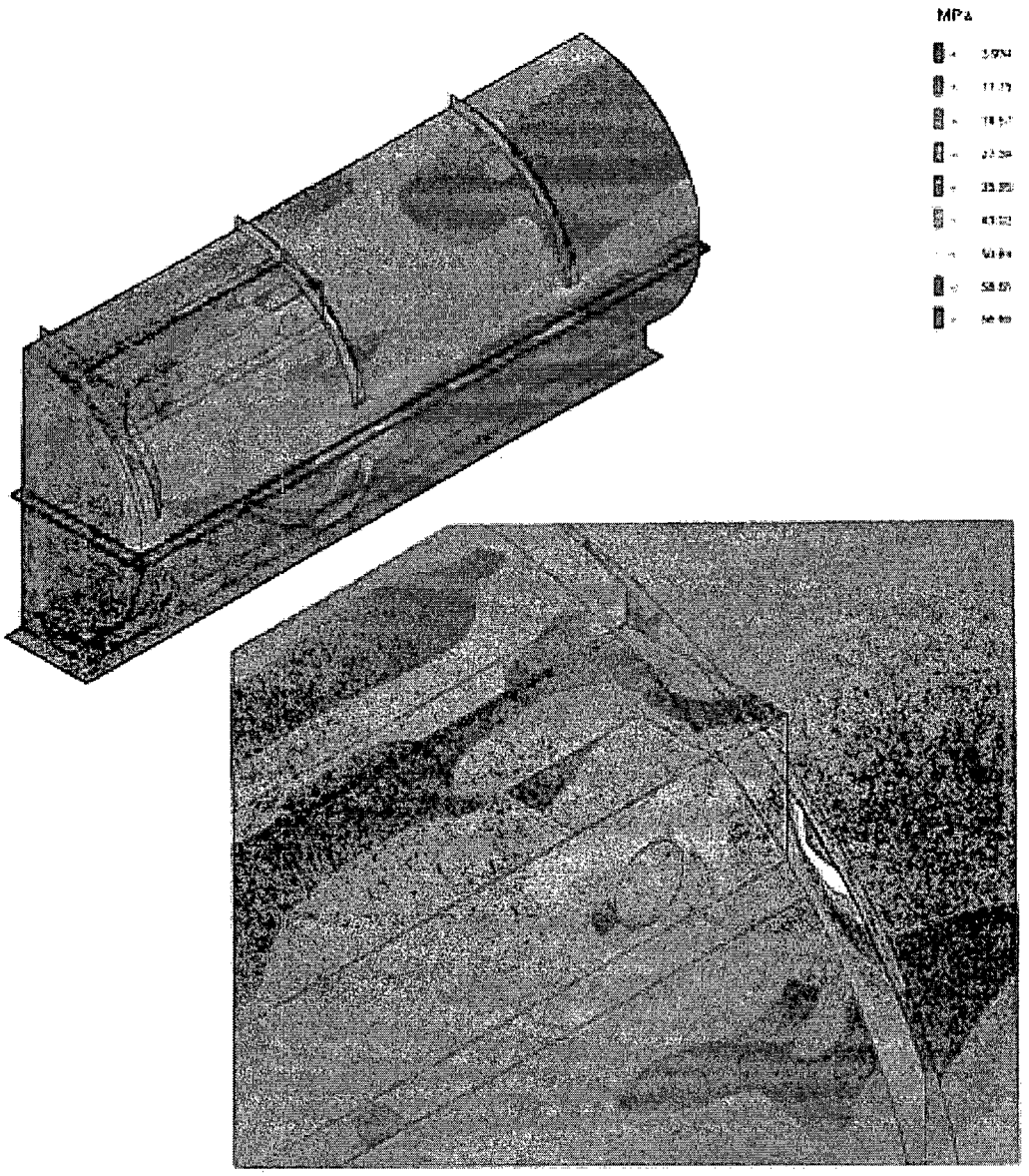

LOWER SURFACE ISO-STRESSES -
4 STRANDS AT 90° - DEADWEIGHT – MASS 4500 KG

Figure 12

Mid thickness iso-stresses – 4 lifting points at 90°

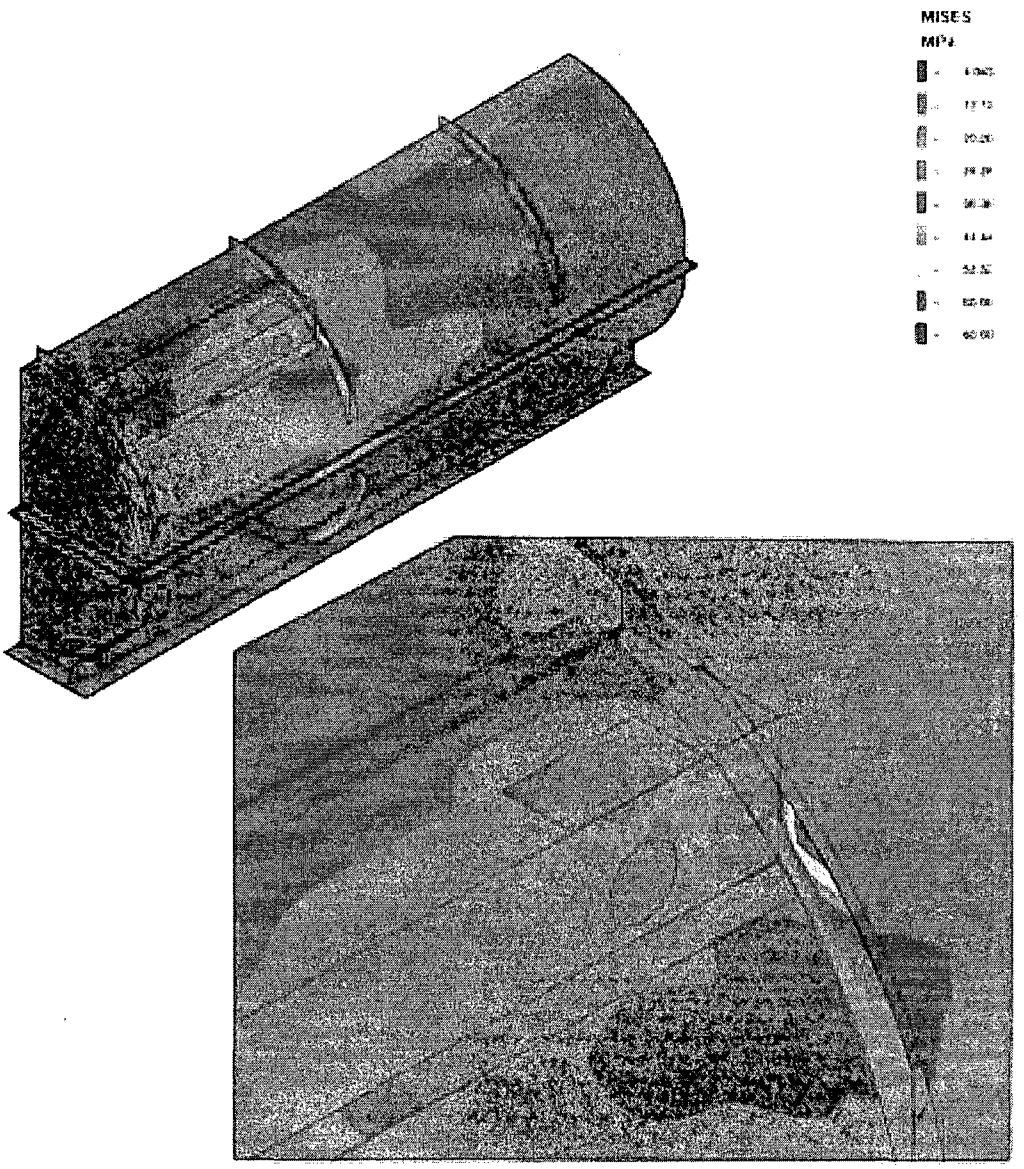

MID THICKNESS ISO-STRESSES -
4 STRANDS AT 90° - DEADWEIGHT – MASS 4500 KG

Figure 13

Upper surface iso-stresses – 4 lifting points at 90°

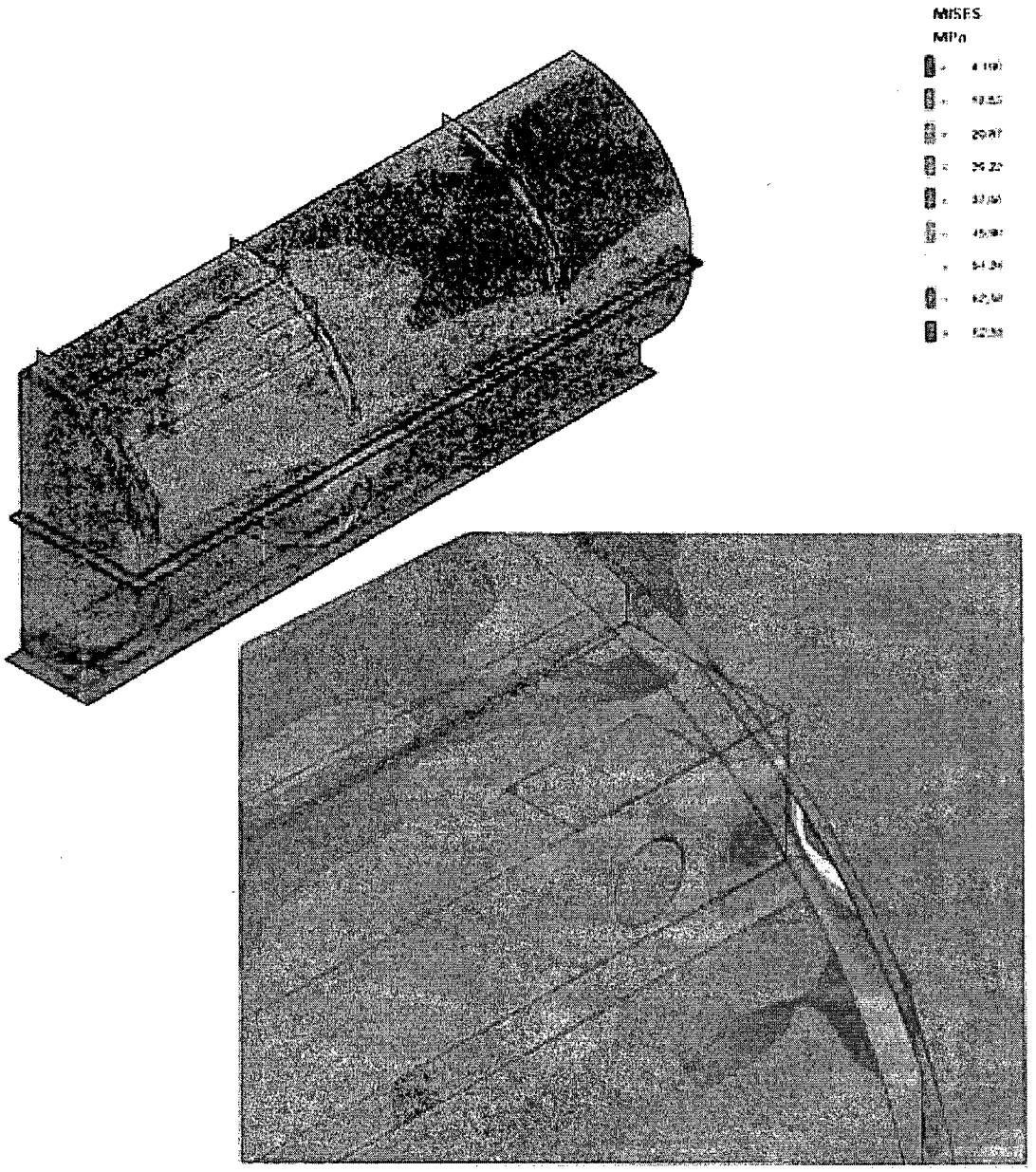

UPPER SURFACE ISO-STRESSES -
4 STRANDS AT 90° - DEADWEIGHT – MASS 4500 KG

Figure 14
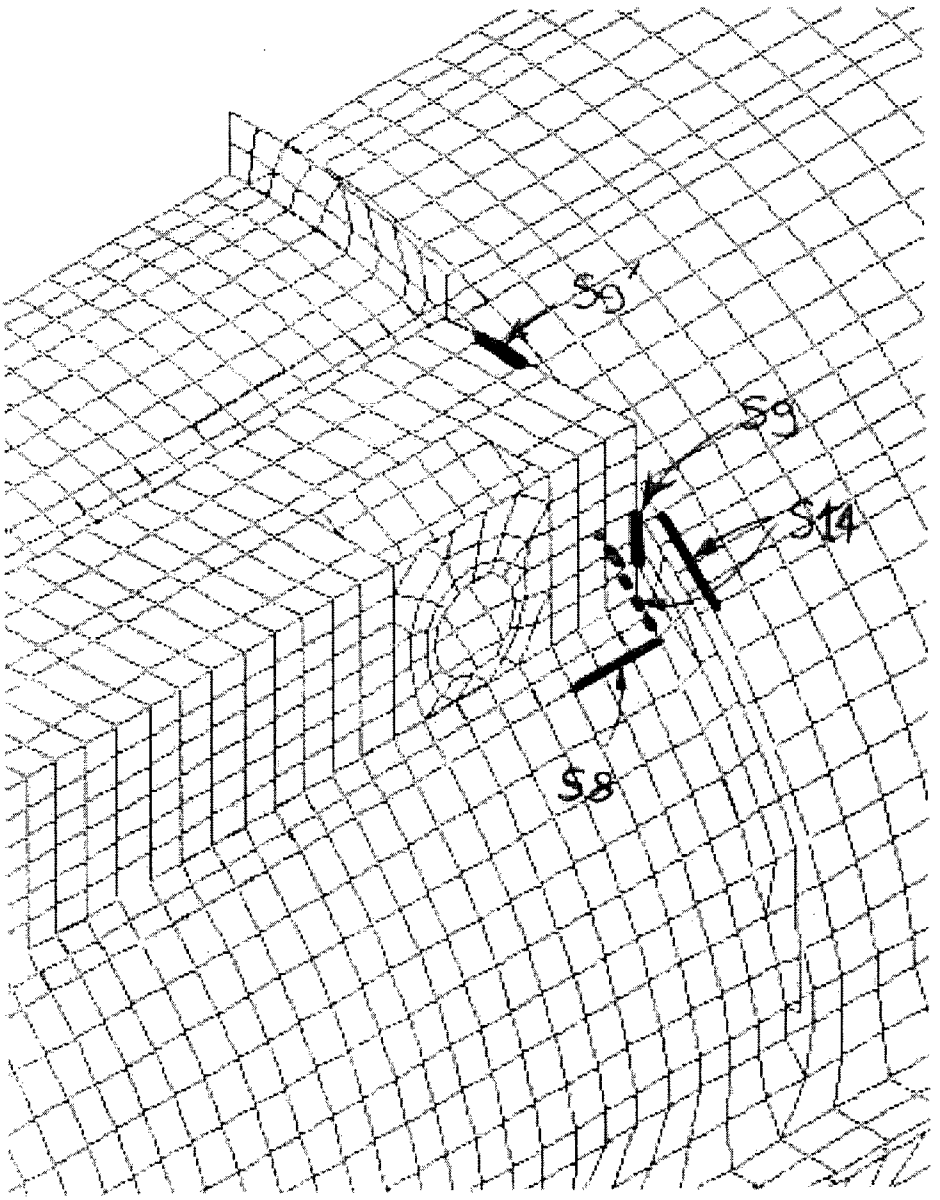
Positions of the most loaded weld beads