HNF-EP-0649

Characterization of the 618-11 Solid Waste Burial Ground, Disposed Waste, and Description of the Waste-Generating Facilities

Prepared by

J. A. Demiter
W. O. Greenhalgh
SESC

Date Published
October 1997

Prepared for Waste Management Federal Services, Inc.

Project Hanford Management Contractor for the
U.S. Department of Energy under Contract DE-AC06-96RL13200

Approved for public release; distribution is unlimited

RELEASE AUTHORIZATION

Document Number:	HNF-EP-0649, Revision 0
Document Title:	Characterization of the 618-11 Solid Waste Burial Ground, Disposed Wastes, and Description of the Waste Generating Facilities

This document, reviewed in accordance with DOE Order 1430.1D, "Scientific and Technical Information Management," and DOE G 1430.1D-1, "Guide to the Management of Scientific and Technical Information," does not contain classified or sensitive unclassified information and is:

APPROVED FOR PUBLIC RELEASE

V. L. Birkland 10/7/97

V. L. Birkland
Lockheed Martin Services, Inc.
Document Control/Information Clearance

Reviewed for Applied Technology, Business Sensitive, Classified, Copyrighted, Export Controlled, Patent, Personal/Private, Proprietary, Protected CRADA, Trademark, Unclassified Controlled Nuclear Information.

Trademark Disclaimer. Reference herein to any specific commercial product, process, or service by trade name, trademark, manufacturer, or otherwise, does not necessarily constitute or imply its endorsement, recommendation, or favoring by the United States Government or any agency thereof or its contractors or subcontractors. The views and opinions of authors expressed herein do not necessarily state or reflect those of the United States Government or any agency thereof. This report has been reproduced from the best available copy.

Printed in the United States of America.

Available to the U.S. Department of Energy and its contractors from the U.S. Department of Energy Office of Scientific and Technical Information, P.O. Box 62, Oak Ridge, TN 37831; Telephone: 423/576-8401.

Available to the public from the U.S. Department of Commerce National Technical Information Service, 5285 Port Royal Road, Springfield, VA 22161; Telephone: 703/487-4650.

CHARACTERIZATION OF THE 618-11 SOLID WASTE BURIAL GROUND, DISPOSED WASTES, AND DESCRIPTION OF THE WASTE GENERATING FACILITIES

J. A. Demiter
W. O. Greenhalgh

EXECUTIVE SUMMARY

The 618-11 (Wye or 318-11) burial ground received transuranic (TRU) and mixed fission solid waste from March 9, 1962, through October 2, 1962. It was then closed for 11 months so additional burial facilities could be added. The burial ground was reopened on September 16, 1963, and continued operating until it was closed permanently on December 31, 1967. The burial ground received wastes from all of the 300 Area radioactive material handling facilities.

The purpose of this document is to characterize the 618-11 solid waste burial ground by describing the site, burial practices, the disposed wastes, and the waste generating facilities. This document provides information showing that kilogram quantities of plutonium were disposed to the drum storage units and caissons, making them transuranic (TRU). Also, kilogram quantities of plutonium and other TRU wastes were disposed to the three trenches, which were previously thought to contain non-TRU wastes. The site burial facilities (trenches, caissons, and drum storage units) should be classified as TRU and the site plutonium inventory maintained at five kilograms. Other fissile wastes were also disposed to the site.

Additionally, thousands of curies of mixed fission products (Sr^{90}, Cs^{137}, Pm^{147}, Cm^{244}, Ru^{103}, Ce^{144} , and others) were also disposed to the trenches, caissons, and drum storage units. Most of the fission products have decayed over several half-lives, and are at more tolerable levels. Of greater concern, because of their release potential, are TRU radionuclides Am^{241}, Pu^{238}, Pu^{240}, and Np^{237}. TRU radionuclides also included slightly enriched 0.95 and 1.25% U^{235} from N-Reactor fuel, which add to the fissile content.

The 618-11 burial ground is located approximately 100 meters due west of Washington Nuclear Plant - No. 2. The burial ground consists of three trenches, approximately 900 feet long, 25 feet deep, and 50 feet wide, running east-west. The trenches constitute 75% of the site area. There are 50 drum storage units (five 55-gallon steel drums welded together) buried in three rows in the northeast corner. In addition, five eight-foot diameter caissons are located at the west end of the center row of the drum storage units. Initially, wastes disposed to the caissons and drum storage units were from the 325 and 327 building hot cells. Later, a small amount of remote-handled (RH) waste from the 309 building Plutonium Recycle Test Reactor (PRTR) cells, and the newly built 324 building hot cells, was disposed at the site.

The radionuclide beta/gamma activity of solid waste disposed at the burial ground was generally divided into three categories: <10 nCi/g (low-activity), 10 to1,000 nCi/g (moderate-activity), and above 1,000 nCi/g (high-activity). The low-activity wastes were primarily disposed in trenches, while the moderate and high-activity wastes were disposed in drum storage units and caissons. Exceptions to this general rule do exist. Much of the moderate and high-activity wastes were disposed to the trenches from 1962 to 1964 in concrete/lead-shielded drums. Also, some of the highly radioactive carton wastes had to be shielded or specially packed to minimize personnel exposure during transit, making it similar to waste later designated as RH. The balance of low-activity waste exhibited little or no beta/gamma activity, or dose rate.

The discrepancy in the number of waste disposal facilities (caissons) does exist at the site. Recent geophysical investigations of the site indicated there are five anomalies, presumed caissons, but the grid of exploration was too large to confirm the exact size of the units. It is recommended that additional site investigations be conducted to confirm the sizes of the detected anomalies.

Wastes disposed at the burial ground also contained hazardous chemical components. These wastes will have to be handled as a mixed waste (MW) as the site is remediated. Several contamination spreads occurred at the burial ground over the course of its operation. Stabilization techniques conducted in the 1980's have eliminated any detectable chemical or radiological contamination to the environment. Based upon subsurface monitoring- well measurements near the burial ground, no radiocontaminants or chemicals attributed to the 618-11 burial ground have been detected. The ground water monitoring surveillance has been operating for two decades. The present environmental status of the burial site will not hinder future site remediation activities.

TABLE OF CONTENTS

1.0 INTRODUCTION 1-1
1.1 SCOPE 1-1

2.0 SITE 2-1
2.1 618-11 BURIAL GROUND SITE LOCATION 2-1
2.2 SITE DESCRIPTION 2-1
2.2.1 Description of Drum Storage Units 2-8
2.2.2 Description of Caissons 2-8
2.2.3 Historical Timeline 2-17
2.2.4 Site Description Based on Hanford Drawings 2-17
2.3 OPERATIONAL HISTORY 2-25

2.4 DISPOSAL ACTIVITIES 2-27
2.4.1 Disposal Containers 2-41
2.5 WASTE SITE DATA DISCREPANCIES 2-54

3.0 WASTES AND WASTE GENERATORS 3-2
3.1 HISTORY OF 300 AREA WASTE GENERATORS DISPOSING OF WASTE TO 618-11 3-2
3.1.1 History of the PRTR and Fuels Fabrication Facility 3-11
3.1.2 History of the 325 Building from 1962 to 1968 3-14
3.2 WASTES GENERATED 3-55
3.3 LOW-ACTIVITY CONTAMINATED WASTE 3-62
3.4 INTERMEDIATE-ACTIVITY CELL WASTE 3-62
3.5 HIGH-ACTIVITY WASTE 3-66
3.6 TRANSURANIC CONTENT 3-66
3.7 TRU CONTENT COMPARISONS 3-70
3.8 SOURCE MATERIAL AND BY-PRODUCT CONTENT 3-72

4.0 RADIOACTIVE RELEASES 4-1

5.0 BURIAL GROUND CLOSURE 5-1
5.1 JUSTIFICATION 5-1
5.2 STABILIZATION 5-2

TABLE OF CONTENTS continued

6.0 MONITORING AND SURVEILLANCE 6-1
6.1 WATER TABLE DATA 6-1
6.2 WELL MONITORING 6-1
6.3 SITE MONITORING 6-8

7.0 INTERVIEWS 7-1

8.0 RECOMMENDATIONS 8-1

9.0 REFERENCES 9-1

APPENDIX A
APPENDIX B
APPENDIX C
APPENDIX D
APPENDIX E
APPENDIX F
APPENDIX G
APPENDIX H
APPENDIX I

LIST OF TABLES

Table 2-1: Data Sheet on the 618-11 Burial Ground 2-6
Taken from PNL - 7008 (1991)
Table 2-2: 618-11 Burial Ground Historical Timeline 2-22
Table 2-3: 618-11 Burial Ground Drawing Revisions Examination 2-23

Table 3-1: The Major PRTR Operational Activities Chart 3-12
Table 3-2: 325-A Hot Cells - Work Activities 3-18
Table 3-3: 325A Hot Cells Disposal Record, 1961-1967 3-20
Table 3-4: Directory of 327 Building Cells (Autumn 1962) 3-45
Table 3-5: 327 Building History 3-48
Table 3-6: The Representative Contents of Simulated 327 3-49
Remote Handled Transuranic Waste
Table 3-7: 618-10 and 618-11 Burial Ground Shipping Records 3-57
Table 3-8: Solid Waste Disposal Summary 1962 to 1964 3-58
from Monthly Activity Reports
Table 3-9a: Radiological Survey Records (PNL, 1965) 3-59
Table 3-9b: Radiological Survey Records (PNL, 1965) 3-60
Table 3-9c: Radiological Survey Records (PNL, 1967) 3-61
Table 3-10: Metallurgical (327 Building)Waste Materials 3-64
Table 3-11: Number of Milkpails from 327 Building 3-65
Table 3-12: 300 Area Waste Shipment volumes Generated 3-69
by Hanford Engineering Development Laboratory
Table 3-13: Plutonium in 300 Area Waste 3-69
Table 3-14: The Average Hanford Site Soild Waste Fissile Density 3-71
Table 3-15: Fissile Density of Commercial Waste Buried 3-72
During 1966-67

Table 6-1: HEIS Monitoring Well Data 6-8

LIST OF FIGURES

Figure 2-1: Hanford Site Map 2-2
Figure 2-2: Stabilized 618-11 Burial Ground 2-3
Figure 2-3: Drawing H-6-930 2-4
Figure 2-4: Burial Ground Perimeter Marker 2-5
Figure 2-5: Aerial View of the 618-11 Burial Site 2-9
Figure 2-6: Aerial View of the 618-11 Burial Ground, First Enlargement 2-10
Figure 2-7: Aerial View of the 618-11 Burial Ground, Second Enlargement 2-11
Figure 2-8: Drum Storage Unit Figure 2-12
Figure 2-9: 325-A Cask Hauling Truck 2-13
Figure 2-10: Eight Foot Caisson 2-14
Figure 2-11: Possible Caisson Location Options at the 618-11 Burial 2-15
Ground Along N12,428.24 Between W2,939.17 and W2,906.67 2-16
Figure 2-12: Concrete Shield Being Placed Atop Caisson 2-16
Figure 2-13: Caisson Off-set Dump Chutes 2-18
Figure 2-14: 618-11 Final Enlargement of Aerial View 2-19
Figure 2-15: Ground Conductivity, 618-11 Burial Ground 2-20
Figure 2-16: Aerial View of Caisson/Drum Storage Units 2-21
EMI Overlay Positions
Figure 2-17: Present Contour of 618-11 Burial Ground 2-28
Figure 2-18: Cardboard Boxes in Trench #2 2-30
Figure 2-19: Covering and Driving Over Filled Trench 2-31
Figure 2-20: Dumping Waste at a 200 Area Trench 2-32
Figure 2-21: 325-A Cask-Hauling Truck in Dump Position 2-35
Figure 2-22: Cask Dump Operation 2-36
Figure 2-23: Waste Disposed to 200 Area Caisson 2-37
Figure 2-24: Condition of Waste Containers in Caissons (200 Area) 2-38
Figure 2-25: Condition of Waste Containers in Caissons (200 Area) 2-39
Figure 2-26: Condition of Waste Containers in Caissons (200 Area) 2-40
Figure 2-27: Typical Load Lugger 2-42
Figure 2-28: 325-A Hot Cells High Activity Waste Disposal 2-44
Method 1960-1964
Figure 2-29: 325-A Waste Disposal Containers 2-45
Figure 2-30: Resin Disposal Canister 2-46
Figure 2-31: Radioactive Dry Waste Disposal 2-48
Figure 2-32: 5-Ton Gatling Gun Cask Isometric 2-49
Figure 2-33: 5-Ton Gatling Gun Cask 2-50
Figure 2-34: 3/4-Ton Milk Pail Cask 2-51
Figure 2-35: 3/4-Ton Milk Pail Cask Isometric 2-52
Figure 2-36: Tilt-Bed Truck for Cask Waste Disposal 2-55
Figure 3-1: 300 Area 3-2
Figure 3-2: Southern Portion of 300 Area 3-3
Figure 3-3: Plutonium Recycle Test Reactor (PRTR) 3-4
Figure 3-4: View of Schematic (PRTR) 3-5
Figure 3-5: 308 Building 3-6

LIST OF FIGURES continued

Figure 3-6: 325 Building 3-7
Figure 3-7: 340 Complex 3-9
Figure 3-8: Schematic View of Plutonium Fuels Pilot Plant 3-13
Figure 3-9: 325 Radiochemistry Building 3-15
Figure 3-10: 325 Building - First Floor 3-16
Figure 3-11: Salt Cycle Process 3-24
Figure 3-12: Approximate Composition of PUREX 1WW 3-25
Figure 3-13: PUREX Plant Strontium Discovery Flowsheet 3-26
Figure 3-14: "A" Cell Spray Calciner Mock-up 3-27
Figure 3-15: Spray Calciner in "A" Cell (1962-1964) 3-28
Figure 3-16: Spray Calciner in "A" Cell 3-29
Figure 3-17: 325-A "A" Cell Pm^{147} Ion Exchange (1960-1962) 3-30
Figure 3-18: "A" Cell Spray Calciner Removal 3-31
Figure 3-19: "A" Cell" Pm^{147} Ion Exchange Pilot Plant (1960-1962) 3-32
Figure 3-20: 325-A "B" Cell 3-33
Figure 3-21: "C" Cell Pm^{147} Purification 3-34
Figure 3-22: 325-A "C" Cell Salt Cycle Process (1960-1962) 3-35
Figure 3-23: "C" Cell Salt Cycle Process Graphite Electrode 3-36
Figure 3-24: Aerial View of 327 Building 3-38
Figure 3-25: Building 327 3-39
Figure 3-26: 327 Radiometallurgy Building Floor Plan 3-40
Figure 3-27: Hot Cells in 327 3-42
Figure 3-28: 327 Hot Cell Load Out 3-43
Figure 3-29: 327 Building Cask Collection 3-44
Figure 3-30: Postirradiation Testing Laboratory 3-46
Figure 3-31: Typical Isometric View of 327 Hot Cell 3-47
Figure 3-32: Radiometallurgy Flow-Chart 3-51
Figure 3-33: Radiometallurgy Gatling Gun Cask 3-53
Figure 3-34: Radiometallurgy Milk Pail Cask 3-54

Figure 5-1: Stabilization Success at 618-11 5-4

Figure 6-1: Hanford Site Map Well Locations 6-2
Figure 6-2: 618-11 Burial Site Tritium Concentration 6-3
Figure 6-3: 618-11 Burial Site Nitrate Concentration 6-4
Figure 6-4: 618-11 Burial Site Beta Concentration 6-5
Figure 6-5: 618-11 Burial Site Alpha Concentration 6-6
Figure 6-6: 618-11 USRADS Survey Radiological Profile Dose Rate 6-9
Figure 6-7: 618-11 USRADS Survey Radiological Profile Count Rate 6-10

ACKNOWLEDGEMENT

The authors would like to thank Robert B. Hall (retired) for his invaluable assistance in preparing this document. Bob had the insight to preserve valuable record and file data, which has been incorporated into this document. His knowledge of the Hanford Site history, and the Site philosophy of operations during the 1960s was also greatly appreciated.

ABBREVIATIONS

AEC	Atomic Energy Commission
BNWL	Battelle Northwest Laboratory
CRBR	Clinch River Breeder Reactor
CWS	control waste system
DOT	U.S. Department of Transportation
EDE	effective dose equivalent
EMI	elecromagnetic induction
FFTF	Fast Flux Test Facility
GPR	ground-penetrating radar
HEDL	Hanford Engineering and Development Laboratory
HEIS	Hanford Environmental Information System
HEPA	high-efficiency particulate air
MFP	mixed fission products
MW	mega watt
NDT	non-destructive testing
NDE	non-destructive examination
O.D.	outside diameter
PFL	Plutonium Fuel Laboratory
PIT	postirradiation Testing
PNL	Pacific Northwest Laboratory
PRTR	Plutonium Recycle Test Reactor
PUREX	Plutonium/Uranium Extraction (facility)
PWR	pressurized water reactor
REDOX	Reduction Oxidation Plant
RH	remote handling
R&D	Research and Development
RLWS	Radioactive Liquid Waste System
ROD	Record of Decision
SNM	special nuclear material
SWITS	Solid Waste Information Tracking System
USRADS	Ultrasonic Ranging and Data System
TRU	transuranic
WHC	Westinghouse Hanford Company
WIPP	Waste Isolation Pilot Plant
WNP-2	Washington Nuclear Plant - No. 2

CHARACTERIZATION OF THE 618-11 SOLID WASTE BURIAL GROUND, DISPOSED WASTES, AND DESCRIPTION OF THE WASTE GENERATING FACILITIES

1.0 INTRODUCTION

This document characterizes the 618-11 solid waste burial ground, the waste disposed at the site, and describes the facilities and activities that generated the wastes. Waste and site characterization data, including photographs, drawings, records research, and interviews were used to evaluate the site (to the extent possible). New data is presented, which was discovered during research for this document. These additional documents, files, photographs, and recently conducted site geophysical investigations provide the most complete, and up-to-date characterization of the 618-11 burial ground.

The 618-11 burial ground is the only pre-1970, buried, suspect transuranic (TRU) contaminated, solid waste not located on the 200 Area plateau to be remediated (DOE 1987). The associated Record of Decision (ROD) implementation plan calls for removal of the solid TRU waste from the 618-11 site (McGuire 1988).

1.1 SCOPE

This document presents records, documents, and photographs of site, facility, and waste characterization data. This was done to develop a description of the buried materials; physical, chemical, and radiological characterization; location; classification; and an accurate layout of the 618-11 solid waste burial ground features.

The information contained in this report will be used as a key element in planning for remediation of the 618-11 burial ground.

2.0 SITE

2.1 618-11 BURIAL GROUND SITE LOCATION

The 618-11 burial ground site, known originally as the 300 Wye or later as the 318-11 burial ground, is located approximately 11 miles northwest of Richland, Washington, directly west of WNP-2. The site is in Section 5, T11N, R28E Willamette Meridian (Voiland 1970). The Hanford grid coordinates for the 618-11 site are:

East - W 2561 (Elevation at Northeast Corner 443 feet, Southeast Corner 448 feet)
South - N 12103
West - W 3561 (Elevation at Northwest Corner 445 feet, Southwest Corner 450 feet)
North - N 12478

Figure 2-1 shows the location of the 618-11 burial ground on the Hanford Site Map. A 1987 aerial photograph, Figure 2-2, gives a more graphic picture of the stabilized 618-11 site. (The boundary of the burial ground is shown by the dashed line.) The burial ground plot plan is shown in Figure 2-3, a reduced figure of drawing H-6-930 found in Appendix B.

2.2 SITE DESCRIPTION

The 618-11 burial ground site is a 375 x 1000 foot rectangle oriented east-west. The site is flat and has a total area of 8.6 acres. The burial ground perimeter is marked with identification markers 2-68-1 through 2-68-28. Marker 2-68-1 is located at the northeast corner (Figure 2-4).

The 618-11 site elevation is approximately 450 feet above mean sea level, with the water table approximately 60 feet below that (Brown 1977). A data sheet on the 618-11 site is given in Table 2-1 (PNNL 1991).

The burial ground consists of three backfilled trenches, 50 underground drum storage units, and five eight-foot diameter bottomless metal caissons. (Data supports two options for the number of caissons at the site, which will be discussed later and in detail in Section 2.5). The trenches are 900 feet long by 50 feet wide (surface dimensions) occupying all of the site except a 100 by 1000 foot section on the north side. The trenches are spaced 50 feet apart (edge to edge) and maintained 50 feet from the perimeter fence, except at the south side, where the trench edge is 25 feet from the fence (Figure 2-3).

The 618-11 burial ground was opened on March 9, 1962 and accepted wastes to Trench #1(the first trench constructed) until October 3, 1962 (Backman 1963a). The burial ground was then taken out of service pending an Atomic Energy Commission (AEC) review and approval of the 618-11 burial ground location. During the closure period, a second trench and 40 vertical drum storage units were added (Berreth 1963, GE 1962-1964, Backman 1963a, and Appendix B).

Figure 2-1: **Hanford Site Map**

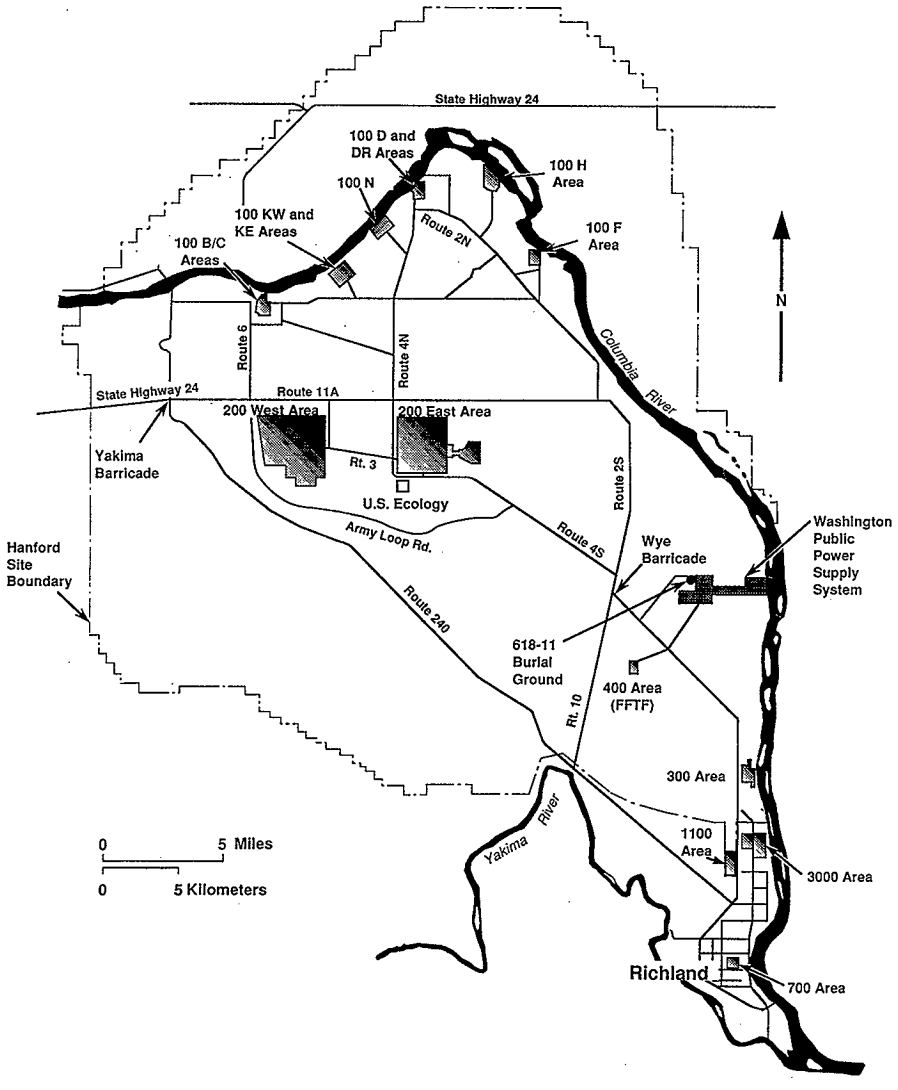

Figure 2-2: Stabilized 618-11 Burial Ground

8701242-41CN

Photograph Taken 1987

Stabilized 618-11 Burial Ground

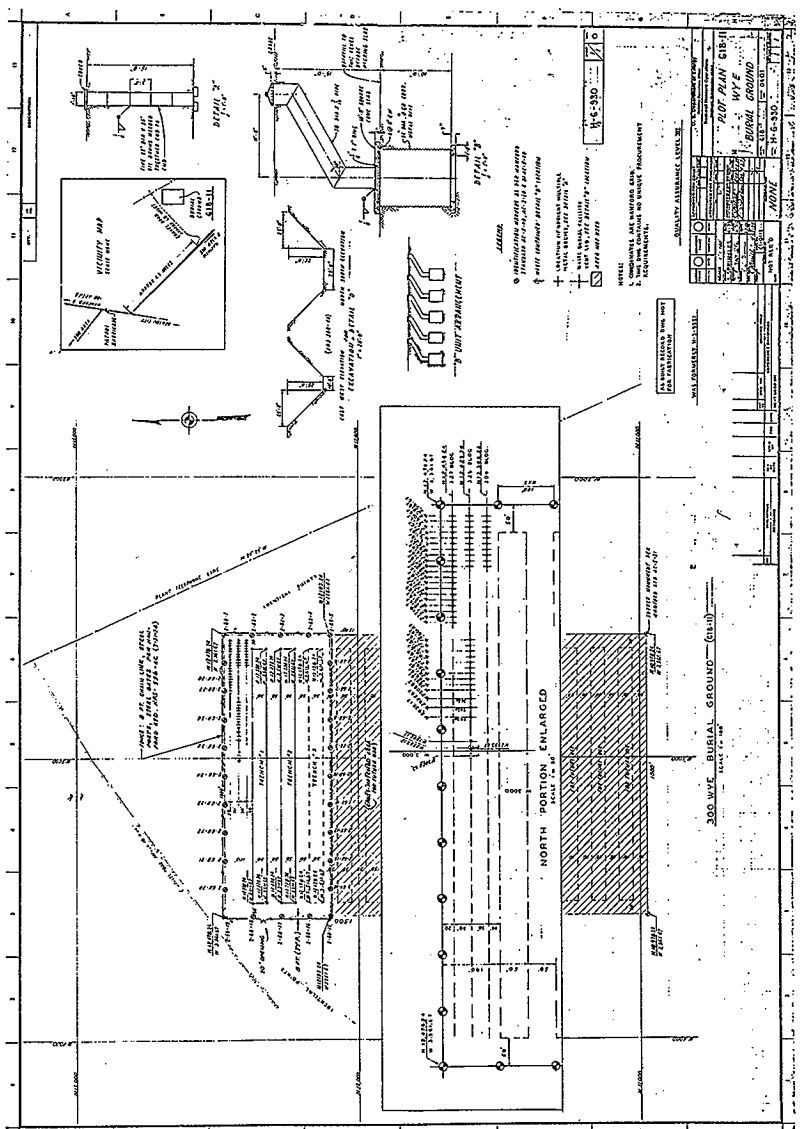

Figure 2-3: Drawing H-6-930

Figure 2-4: Burial und Perimeter Marker

Table 2-1: Data Sheet on the 618-11 Burial Ground Taken from PNL - 7008 (1991)

Name/Type of Facility Burial Ground	Past Designation 300 WYE Burial Ground "Y" Burial Ground	Number 318-11
Location About 1-1/2 miles northeast of the Richland-Hanford Highway (Route 4 South), from a point 7-1/3 miles northwest of the 300 Area. (Figure C.1.1)	Service Dates 3/62 - 12/67	Status Retired
Site Coordinates Hanford Grid: W-2561, N-12103, W-3561, N-12478	Reference Drawings H-3-9951 M-6000	Elevations Ground ~430 ft. Water Table ~370 ft. (1973) Site Depth 15 ft.

Source and Description of Waste

The site is a repository for a broad spectrum of low-to-high-level dry radioactive wastes, primarily fission products, and plutonium. Cartoned low-level wastes were buried in the trenches and medium-to-high-level beta-gamma wastes in the pipe facilities and caissons. Quantities probably amount to thousands of curies of beta-gamma wastes and 10's to 100's of grams of plutonium.

Description of Facility

The site consists of a 375 x 1000-ft. rectangle oriented east-west. Total area is 8.6 acres. Burial facilities include three backfilled trenches, 900 x 50-ft., occupying all of the site, except a 100 x 1000-ft. strip on the north side. In the eastern half of this northern portion are located 50 vertical pipe storage units made by welding five each 55-gal. drum sections together. Just west of the pipe installations are four caisson storage facilities, consisting of 8-ft. diameter by 10-ft. high 8-gauge corrugated metal pipe, buried 15-ft. Below grade, and connected to the surface by offset 36-in. pipe. All pipe and caisson disposal facilities have been backfilled, capped off with concrete, and covered with dirt.

The burial ground perimeter is marked with Identification Markers 2-68-1 through 2-68-28.

Radionuclide Content

Total Beta, Gamma <2000 g
Pu <100 g

The AEC had also requested closure of the 618-10 burial ground. Construction of the second trench, along with installation of the 40 drum storage units, and several contamination spreads at 618-10 (300 North) burial ground, prompted reopening of the 618-11 burial ground on September 16, 1963. It was operated continuously until its permanent closure on December 31, 1967 (Cadwell 1971). The closure period of October 1962 to September 1963 is supported by:

(1) General Electric Reference (1962), detailing
- 618-11 closure
- The AEC review process
- Construction of Trench #2 at the site
- Construction of 30 or more drum storage units
- Continued operation at the 618-10 burial ground

(2) Appendix B, drawing H-3-9951, Revision 4
- Showing the 40 drum storage units installed, dated 9/25/63

(3) Appendix E, summation of 618-11 and 618-10 burial ground shipments January 1962 to December 1967

(4) Appendix F, summation of General Electric, 1962-1964 entries

(5) Appendix H, Battelle Northwest Laboratory (BNW) contamination incidents at Hanford 1956-1971 (See Section 4.0 for further details).

Over the life time of the burial ground, three trenches were constructed. At closure of the burial ground in December 1967, Trench #3 had not been completely used (Voiland 1970). The EMI/GPR data presented in Section 6.3 (Bergstrom 1997) supports this conclusion. Figure 2-3 indicates the trenches were 25 feet deep. The angle of repose is 1.0 vertical to 1.0 horizontal, or 45 degrees. Photographs indicate there was not a 10 feet. flat bottom as shown in Figure 2-3.

Figures 2-5 and 2-6 show aerial photographs of the 618-11 burial ground taken August 19, 1964. Only the three caissons located on N12,428.24 between W2,939.17 and W2,906.67 had been installed at the 618-11 burial ground by this date. This is supported by the several entries (GE 1962-1964) from June through September 1964. Clearly, the two caissons located along N12,428.24 between W3,008.67 and W2,982.17 had not been installed at the burial ground at this time (Figure 2-7). Figure 2-5 is taken looking due west while Figure 2-6 is taken at a west-southwest orientation. The trench being filled from the west is Trench #2, based on measurements given in Figure 2-3, H-3-9951 drawing as-built information, and the date given on drawing H-3-9951, Revision 4, which shows Trench #3 was not added until 1965.

2.2.1 Description of Drum Storage Units

The vertical underground drum storage units were made by welding five 55-gallon steel drum sections together. The drum storage units are 22 inches in diameter, 15 feet long, with open tops and bottoms (Figure 2-8). The drum storage units are located in three rows at the northeast section of the burial ground (Figure 2-3).

Drum storage units were emplaced by trenching the area 15 feet. deep, then placing the units in the trench and backfilling (Phillips 1980). The drum storage units were emplaced on an as-needed basis. The first group of 40 was placed along N12,456.24, the eastern portion of N12,428.24, and N12,398.24 (Berreth 1963 and Appendix B, H-3-9951, Revision 3). A later group of 10 drum storage units was added on N12,428.24 between W2,801.67 and W2,891.67 between October 1963 and August 1964. It is probable that these last 10 units were installed between June 1964 and August 1964 with the three caissons located between W2,906.67 and W2,939.17 (GE, 1962-1964). The March 6, 1964 contamination event reported in Appendices H and I, and supported by Figure 2-9 and Appendix A data, suggest the drum storage units were filled, starting at the east. Spacing on the drum units is shown as 10 feet in Figure 2-3, which seems accurate based on aerial and ground photographs, and Electromagnetic induction (EMI) and Ground-penetrating radar (GPR) (Bergstrom 1997).

2.2.2 Description of Caissons

The caisson area is located just west of the center row of the drum storage units along N12,428.24. The caisson design selected appears to be eight-foot in diameter by 10 feet high, 8-gauge corrugated culvert-style metal pipe. The caissons are buried 15 feet below grade and are connected to the surface through an offset pipe (Figure 2-10). The eight-foot diameter caissons were spaced between 15 and 16.5 feet apart (Figure 2-11 and Figure 2-3). The centerline of the off-set dump chute was spaced 11.5 feet from the center of the caisson (Figure 2-3). A concrete slab was placed atop the caisson during construction to provide additional shielding. Figure 2-12 shows a similar concrete shield being placed atop a caisson during placement at the 200 West Area in 1978. After the placement of the concrete shield and

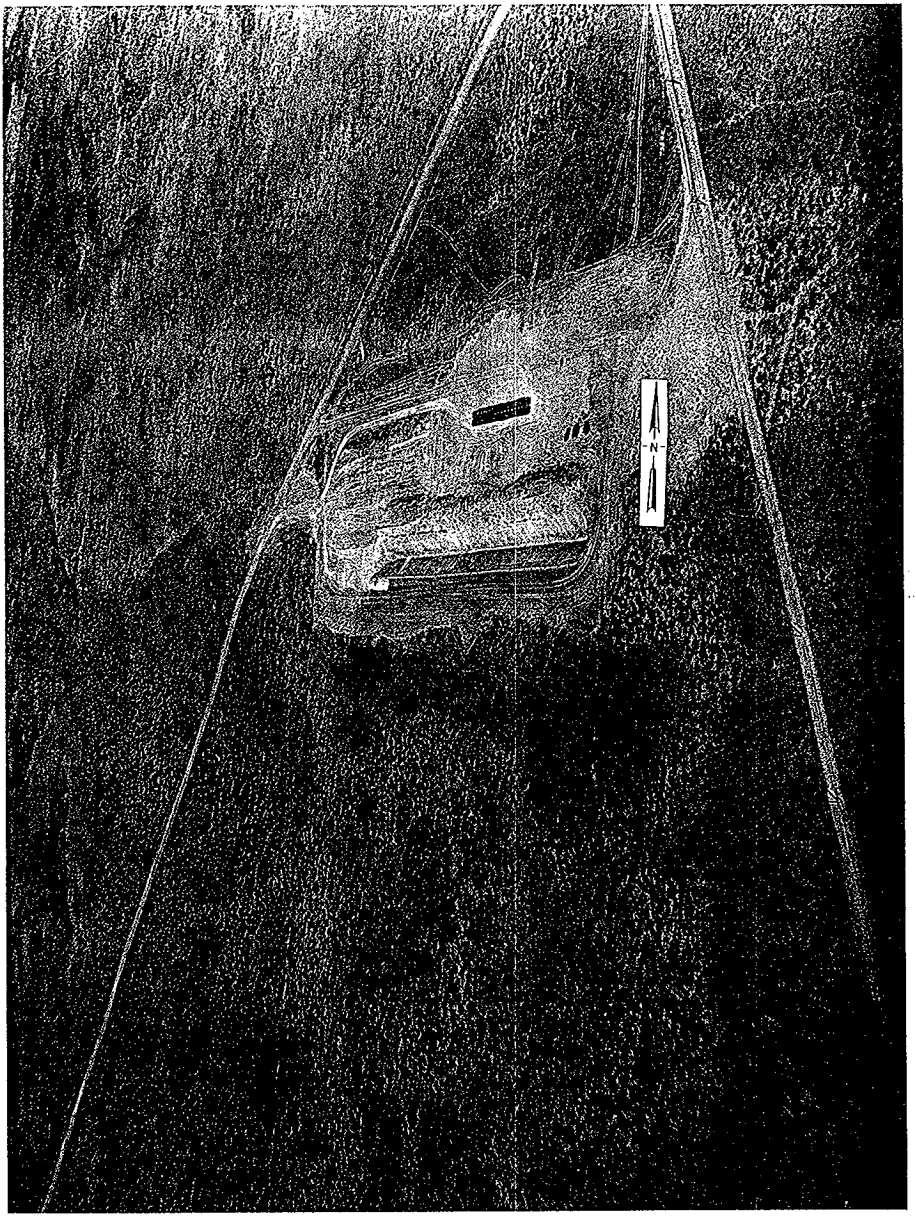

Figure 2-5: Aerial View of the 618-11 Burial Site

Figure 2-6: Aerial View of the 618-11 Burial Ground, First Enlargement

Figure 2-7: Aerial View of the 218-11 Burial Ground, Second Enlargement

Figure 2-8: # Drum Storage Unit

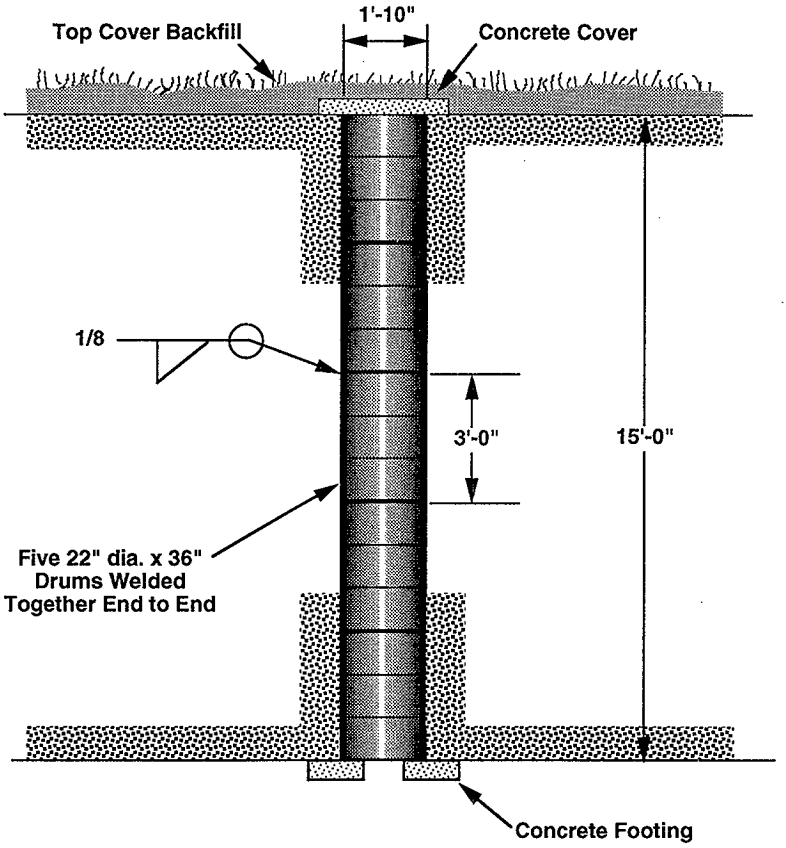

Figure 2-9: [illegible]5-A Cask Hauling Truck

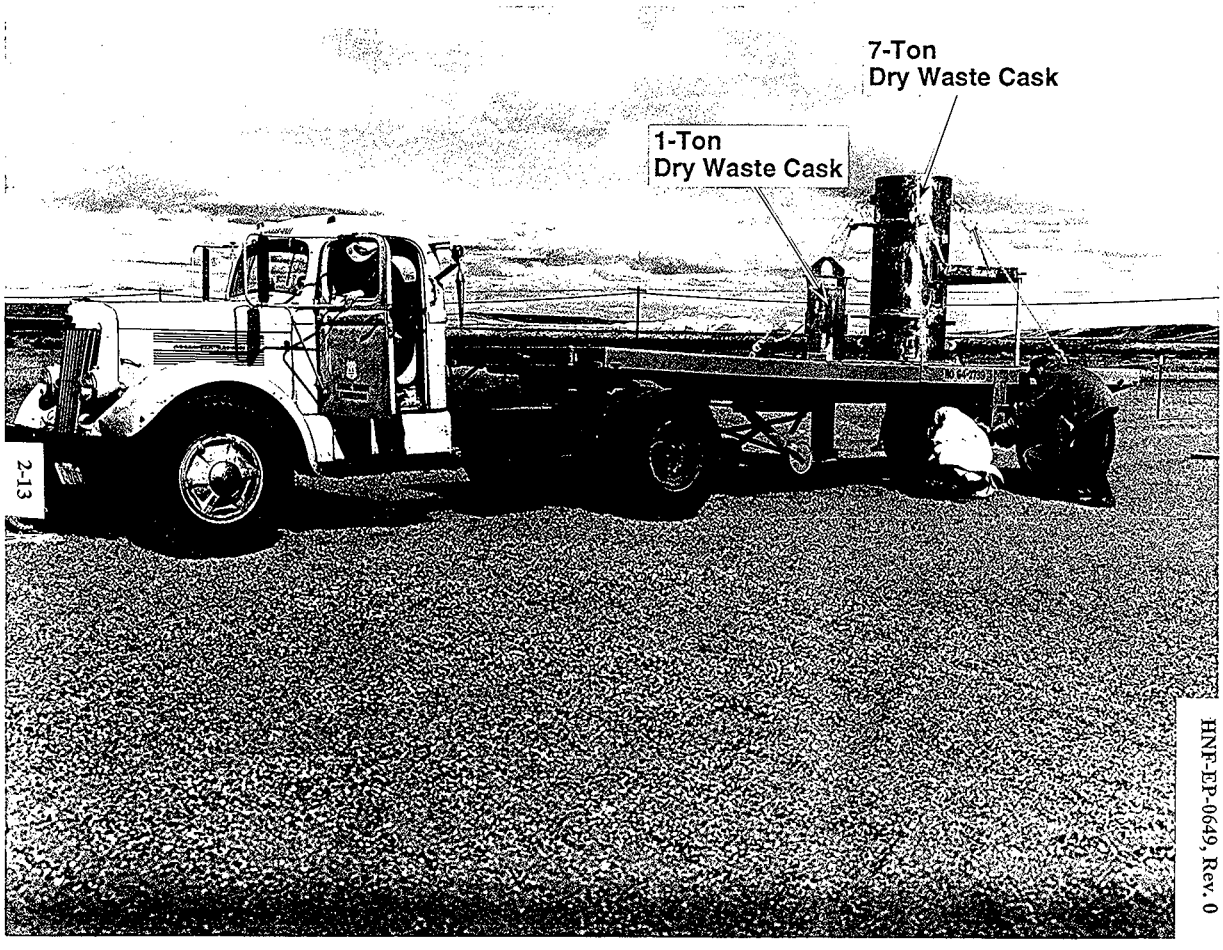

Figure 2-10:

8 Foot Caisson

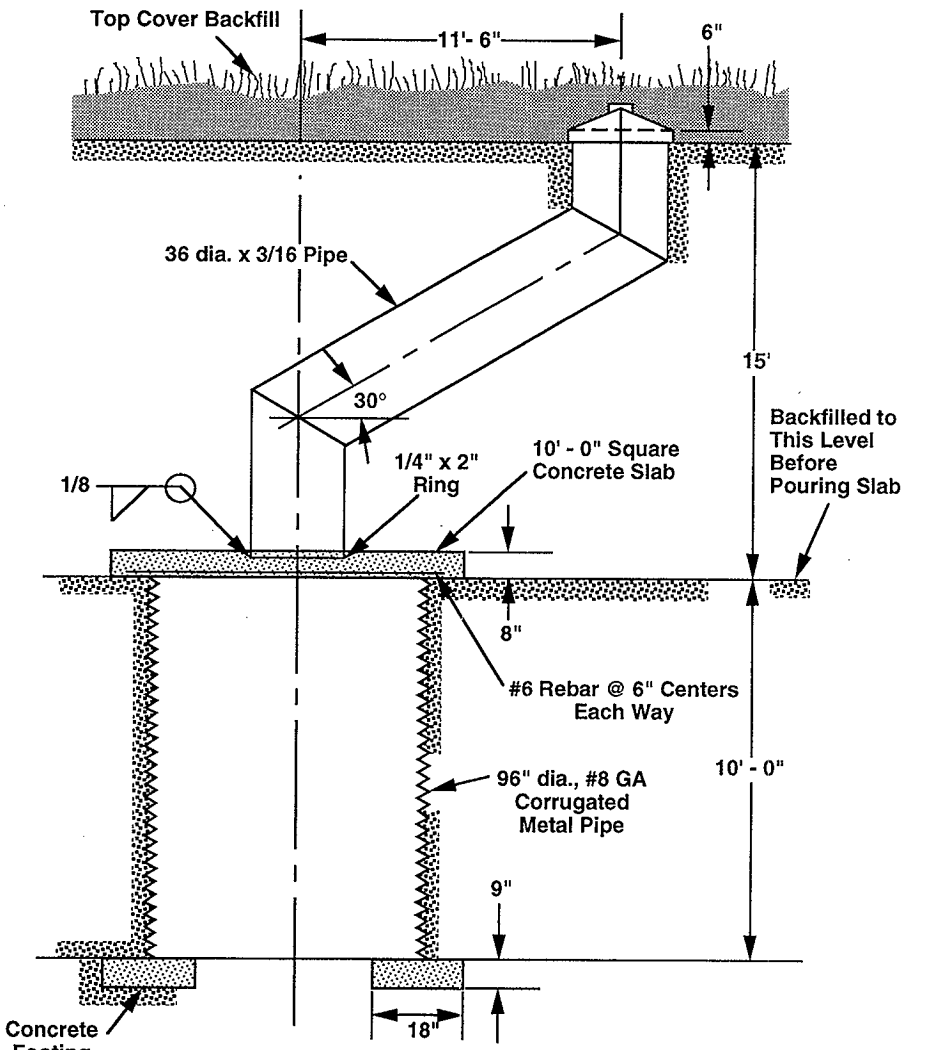

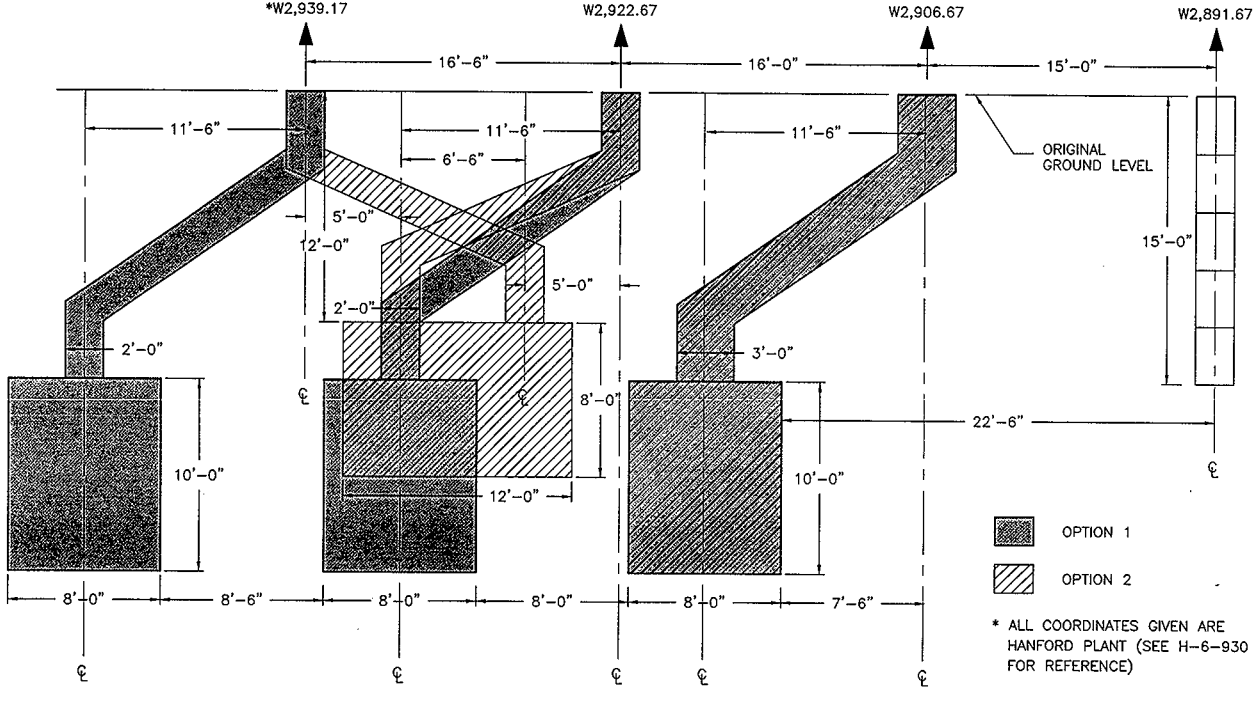

FIGURE 2-11: POSSIBLE CAISSON LOCATION OPTIONS AT THE 618-11 BURIAL GROUND ALONG N12,428.24 BETWEEN W2,939.17 AND W2,906.67

Figure 2-12: Concrete Shield Being Placed Atop Caisson

earth backfilling to the top of the caisson, the offset dump chute was installed. A similar 200 Area caisson placement is shown on Figure 2-13. The final 15 feet of earth fill was placed over the caisson to meet ground level. No bottom (except dirt) existed in the caisson units (Phillips 1980 and Graybeal 1964).

The first caissons installed at the burial ground, from June 1964 to August 1964, had 24 inch and 36 inch waste drop chutes. This is supported by: (1) the Backman (1964) reference, which states that they have had no problem in getting the waste boxes to travel to the bottom of the tanks; (2) Figure 2-3, showing two 24 inch outside diameter (O.D.) caisson pipe openings at W2,939.17 and W2,922.67, next to the three foot diameter caisson pipe opening at W2,906.67; (3) the enlarged photograph (Figure 2-14), which clearly shows the two most westerly caisson waste pipe openings at a substantially smaller diameter than the adjacent three foot caisson opening; and (4) the EMI done, (Phillips 1982 Bergstrom 1997) clearly shows three anomalies to the west of the drum storage units at W2,906.67 to W2,939.17 (Figures 2-15 and 2-16).

A discrepancy exists in the number of caissons at the W2,906.67 to W2,939.17 location. Although this document reports three caissons at that location, the number of caissons cannot be verified with complete confidence without further non-intrusive site evaluations that will be recommended in Section 8. Site drawings and EMI/GPR data (Bergstrom 1997) support three eight-foot diameter caissons at these coordinates, while the written information from monthly reports (GE 1962-1964) suggest one eight-foot diameter caisson and one double-chute twelve-foot caisson (Graybeal 1964). Interviews with Bob Hall and George Backman support the fact that all caissons were eight foot diameter. The caisson options located at these coordinates are shown in Figure 2-11. Section 2.5 will discuss in detail the discrepancies contained in drawings and data concerning the site.

2.2.3 Historical Timeline

A historical timeline of the 618-11 site is given in Table 2-2. The timeline provides key dates in understanding the activities that transpired during the development of the burial ground. These documented activities provide a simple chronology of the burial ground which will aid in characterization. Each burial ground activity cited is supported by reference(s). Not all activities known to have occurred at the burial ground are given, i.e., not all contamination incidents are listed. Only activities that establish dates of operation, major construction start/completion, or understandings of operation philosophy are cited.

2.2.4 Site Description Based on Hanford Drawings

Drawing H-3-9951 (later renumbered H-6-930) is the only known Hanford drawing of the 618-11 burial ground. The drawing revisions were examined to determine the burial ground construction and operation sequence presented in Section 2.3. Only aperture cards for Revisions 2 through 7 of H-3-9951 and Revision 0 of H-6-930 could be located. The results of the examination of all available revisions of the drawings is given in Table 2-3. Copies of all revisions of the two drawings are provided in Appendix B.

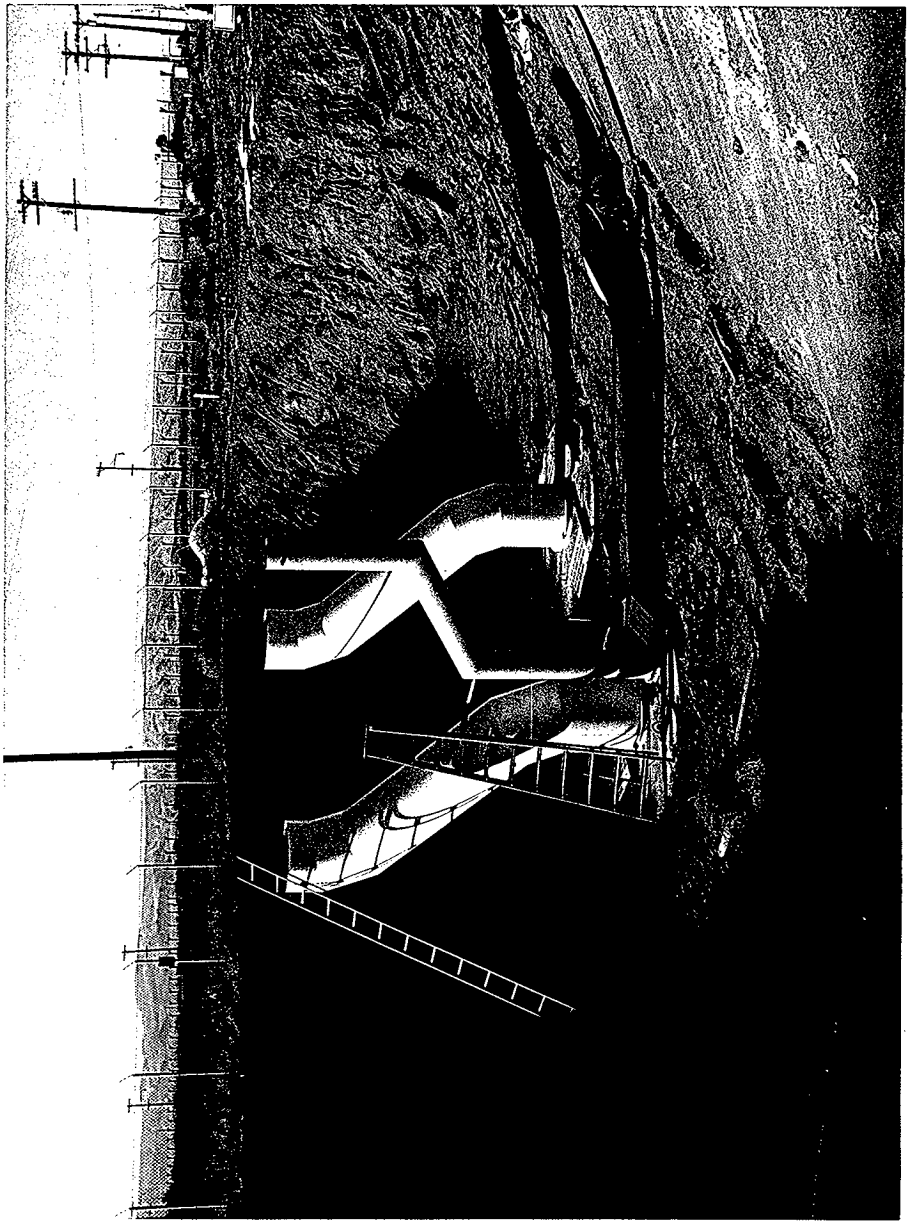

Figure 2-13: Caisson [illegible]f-set Dump Chutes

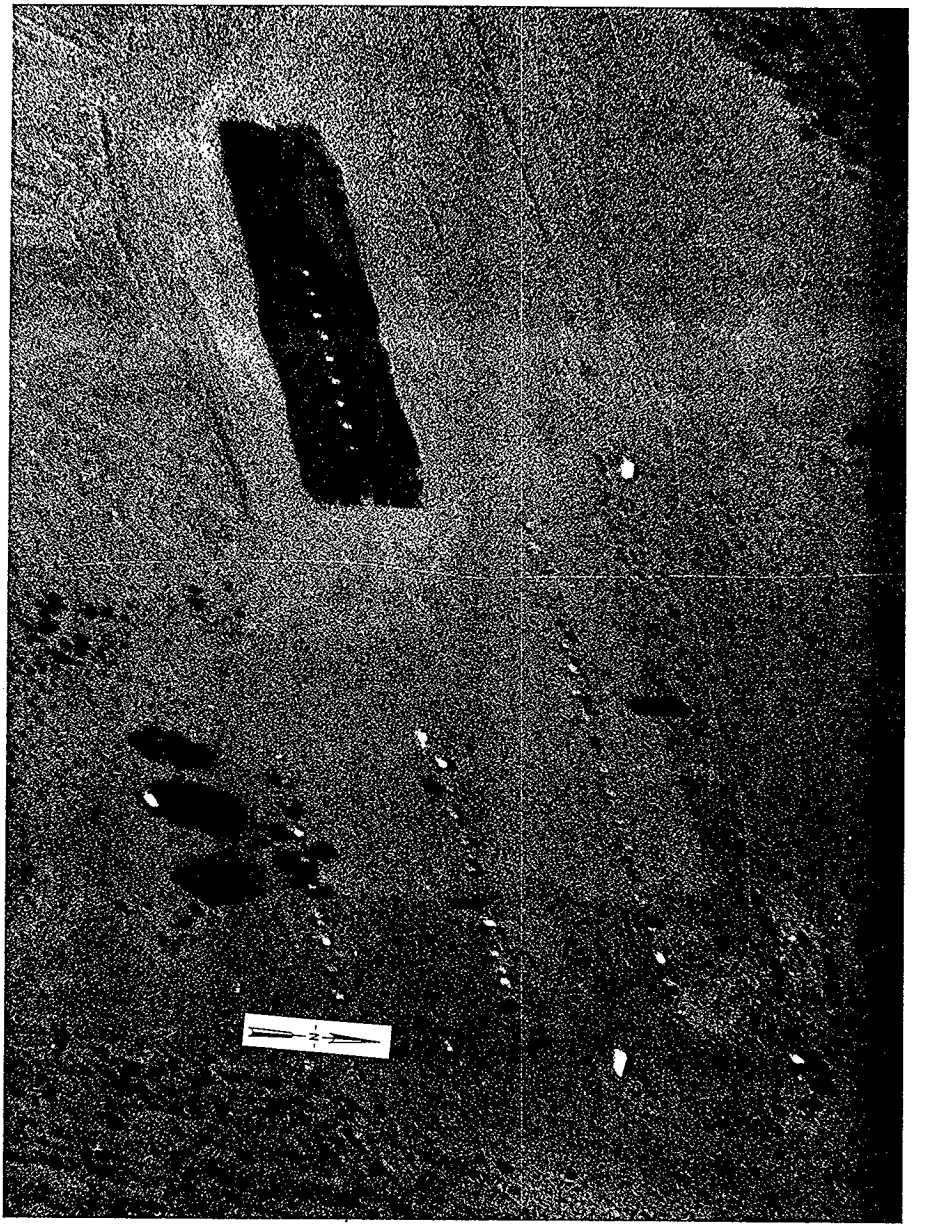

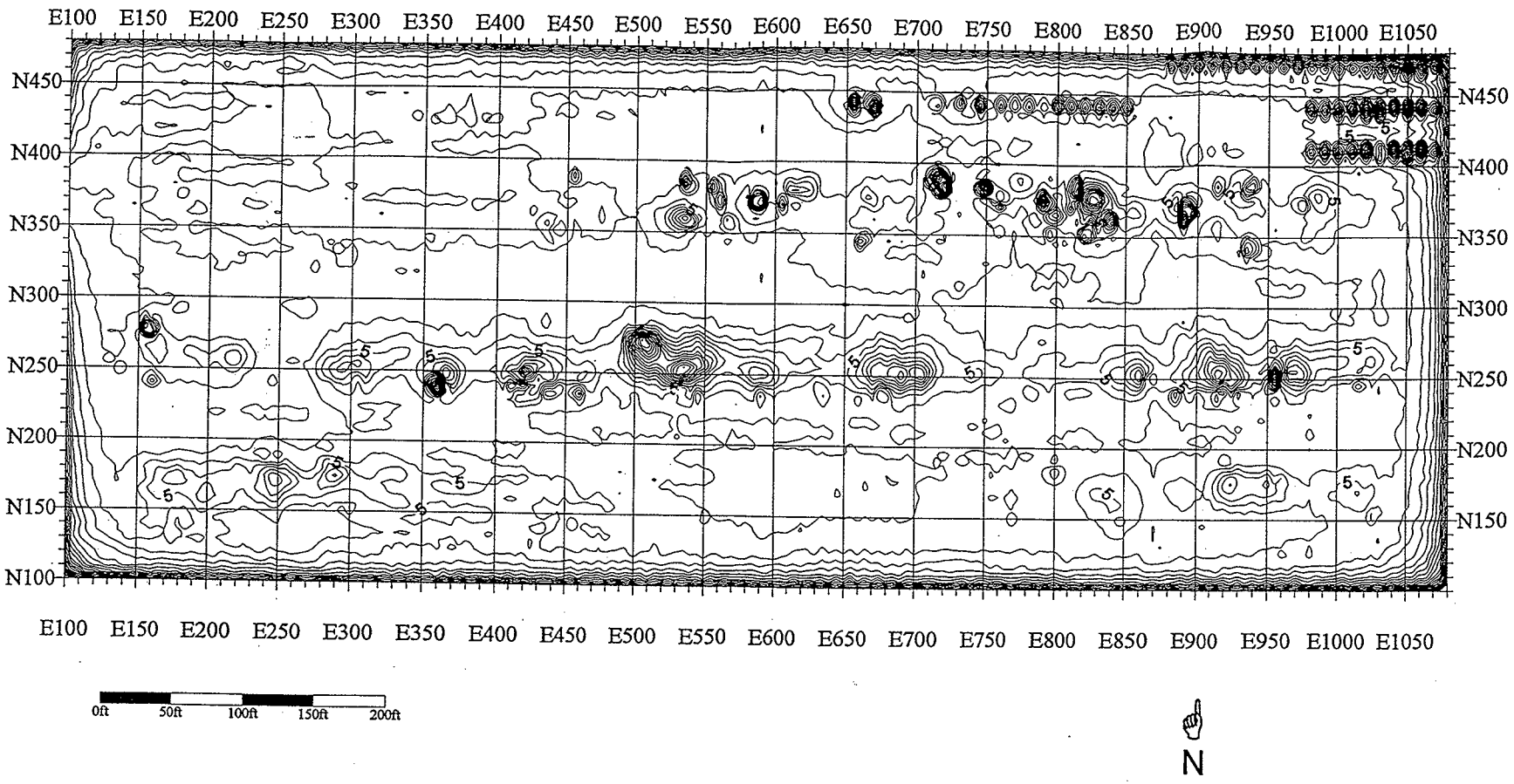

Figure 2-15:

Ground Conductivity, 618-11 Burial Ground Contour Interval (1 mS/m).

Figure 2-16 Aerial View of Caisson/Drum Storage Units EMI Overlay Positions

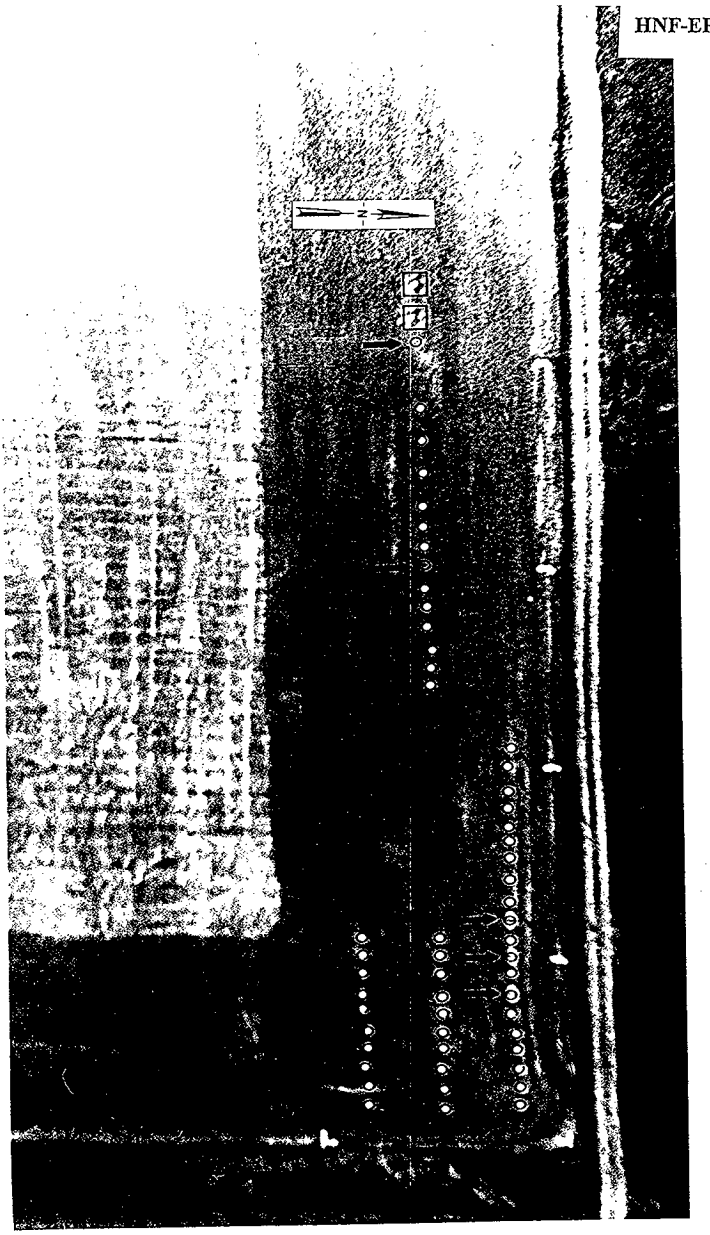

Table 2-2: 618-11 Burial Ground Historical Timeline

Date	Activity	Reference
03/09/62	618-11 trenches open	Appendix F
10/03/62	618-11 closed pending AEC Review	HW-75376 (GE 1962-64)
04/15/63	1962 summary: 618-11 first trench being filled; 1 yr left @ 618-10	HW-77274 (Backman 1963a)
09/02/63	Contamination spread at 618-10	Appendix H
09/16/63	618-10 closed	HW-79046 (GE 1962-64)
09/16/63	618-11 receiving waste	HW-79046 (GE 1962-64)
09/24/63	Approximately 30 pipe units installed @ 618-11	EA Berreth 1963
09/30/63	Contamination spread at 618-10	Appendix H
01/10/64	Draft caisson drawings submitted	RG Graybeal 1964
02/64	Designs for 618-11 caissons being reviewed	HW-81019 (GE 1962-64)
03/06/64	325 Bldg. 7-ton cask first run to drum units	Photo #0640606, Appendix A
03/06/64	Contamination spread at 618-11	Appendices A, H, I
06/64	Two dry waste disposal tanks are being installed at 300 Wye BG	HW-83000 (GE 1962-64)
07/64	Installation of the two large waste disposal tanks at the 300 Wye BG will be completed 8/64.	HW-83445 (GE 1962-64)
08/19/64	Shows 50 pipe unit tops & caisson openings	Photo #37273-11
09/64	The large waste disposal tanks are in use at the 300 Wye BG. To date, we have had no problems in getting the waste boxes to travel to the bottom of the tanks.	HW-84291 (GE 1962-64)
10/14/64	The large disposal tanks at the 300 Wye are now in use.	GE Backman 1964
1965	3rd Trench added at 618-11	H-3-9951, Rev. 4
06/19/67	Waste silos at 618-11 will soon be filled	Corley 1967
07/31/67	AEC seeking closure of 618-11	Hall 1967
12/31/67	618-11 Closed	Appendix E (Cadwell 1971)
03/12/68	Trenches have been backfilled	Corley 1968
09/16/68	Site inspection to meet AEC closure requirements.	Hall 1968
02/11/74	Request for fence and gate	ARCO 1974
07/25/74	Fence/gate work completion and acceptance	JA Jones 1974
04/82	Site surface stabilization	Conklin 1982, WHC 1983, Bracken 1982

Table 2-3: 618-11 Burial Ground Drawing Revisions Examination

Revision Number	Dates and Data
Revision 2, H-3-9951, Sheet 1 of 1	▸ Revision Date 7/31/63 ▸ Issued 7/31/63 ▸ Released for construction 7/31/63 ▸ Shows trenches only; #1 and #2 are labeled & another 12 are phantomed in.
Revision 3, H-3-9951, Sheet 1 of 1	▸ Revision date 9/25/63 ▸ Signed and approved 10/10/63 ▸ Shows the addition of 40 drum storage units, none to the west end.
Revision 4, H-3-9951, Sheet 1 of 3	▸ Revision date 1965 only ▸ Signed and approved 4/21/66 ▸ Entitled: "Burials to date" ▸ Shows 10 more drum storage units to the west (50 total) and the three "waste burial facility vent lid' caissons added to the west of the last drum storage units. The "waste burial facility" is the same title RG Graybeal used in his 1/10/drawins (Ref. 26). The three "vent lids" show 24" OD, 24" OD, and 36" OD respectively. ▸ Trench 3 is added.
Revision 5, H-3-9951, Sheet 1 of 1	▸ Rev. 5 & 6 are different than Rev. 7. Rev. 7 appears to be older with additional data not shown, or changed on Rev. 5 & 6. ▸ The microfilmed Rev. 5 bears a 2/16/68 date (after 618-11 closure), but on Rev. 7 (H-3-9951, Sheet 2 of 3), the Rev. 5 bears a 5/17/65 date. It was signed off and approved 8/3/66. Rev. 7 appears to be the reliable source for correct history of the 618-11. ▸ Nothing was really done other than combining the three sheets from Rev. 4 into one sheet (although Rev. 7 states that Rev. 5 expanded the drawings to three sheets).
Revision 6, H-3-9951, Sheet 1 of 1	▸ Nothing is stated but gate & fence added, with a 3/9/74 date (after closure). ▸ But using the Rev. 7 entry, a revision date of 8/24/65 is given, with the wording "additional containers." As in this revision, both large caisssons are shown between W3008.67 and W2997.17.
Revision 7, H-3-9951, Sheet 2 of 3	▸ Shows a revision date 8/3/66, and an approval date of 8/3/66, with the statement, "checked for as-builts." ▸ This revision will be used as the standard for Rev. 5 & 6 data and dates
Revision 0, H-6-930, Sheet 1 of 1	▸ Was a redraw of H-3-9951, Rev. 6, which gives it the "6" designation for facilities outside the 100, 200, 300, and 400 Areas.

The original drawing was made, checked, and classified November 10, 1961. Seven revisions were made to Drawing H-3-9951. The first recorded revision is dated July 31, 1963 (Revision 2). It is identified as the only sheet, and gives a general layout of 14 trenches. The two northern most trenches are numbered as Trenches #1 and #2, and site coordinates are listed. Revision 1, which apparently changed site coordinates for the burial ground, was signed off November 29, 1961, but no copy was found.

Revision 3, dated September 25, 1963, has the locations of 40 "upright multiple metal drums," in three rows with the rows designated for the 327, 325, and 309 buildings. The north row (N12,456.24) containing 20 units was assigned to the 327 building. The middle row (N12,428.24) containing 10 units was assigned to the 325 building. The south row (N12,398.24) containing 10 units was assigned to the 309 building. These drum storage units are in the northeast corner of the burial ground, as shown on the current H-6-930 drawing. The first errors were introduced into the drawings at this revision (Section 2.5). The installation of the 40 drum storage units is supported by the September 23, 1963 Berreth reference (Berreth 1963) and the drawn locations of the drum storage units are supported by the site EMI characterization (Figure 2-15).

Revision 4, dated simply "65" at the revision block, split the drawing into three sheets, labeled Trench #3, added 10 more drum storage units, and added three caissons . It is believed that the 10 drum storage units and the three caissons were installed at the same time between June 1964 and August 1964, prior to the August 16, 1964 site aerial photograph (Figure 2-5). These additional drum storage units started at 130 feet west (W2,801.67) of the last drum storage units in the center row (N12,428.24). The revision addition of three "waste burial facility vent lids" (later shown as offset drop chute caissons, Revision 5) were installed west of the 10 drum storage units from W2,906.67 to W2,939.17.

The microfilmed versions of Revisions 5 and 6 show revision dates after the closure of the burial ground. Revision 7, however, has different revision dates and descriptions for Revisions 5 and 6. The revision dates and descriptions of 5/17/65 for Revision 5 and 8/24/65 for Revision 6 contained on Revision 7 coincide with known events of the burial ground during its operation. The revision descriptions and dates contained on the microfilmed Revisions 5 and 6 coincide with known event after the burial ground closure. Revisions, 5, 6 and 7, contain supportive burial ground data but Revision 7 provides the needed descriptive data to support characterization. For example, Revision 7 description title of Revision 6 shows "additional containers" and is dated 8/24/65. This is the only date found that provides information concerning the installation of the last two caisson units between W2,993.67 and W3,008.67.

This drawing evaluation clearly shows that Trench #1 and Trench #2 were the first burial facilities built at the 618-11 burial ground. The two trenches were followed by construction of 40 drum storage units in September 1963 (Berreth 1963). The construction of an additional 10 drum storage units, and three caissons were added prior to August 1964 (Figures 2-7 and 2-14), and is supported by the 1965 date on Revision 4. In 1965 Trench #3 and the final two caissons were added, as detailed in Revisions 4 and 7. The final two caissons are shown straddling the north-south centerline (W3,000.00) of the burial ground.

There are several errors contained in the drawings (discussed in detail in Section 2.5). However, the Hanford drawings do provide a valuable resource to the burial ground characterization. Combining the data in the Hanford drawings with written references and photographic data, provide a credible burial ground characterization package.

2.3 OPERATIONAL HISTORY

The 618-11 burial ground operated from March 9, 1962 until October 3, 1962, and again from September 16, 1963 until it was closed permanently on December 31, 1967.

The site contains a broad spectrum of low-level dry waste including fission products, by-product material (thorium and uranium), and plutonium. The site was used for the disposal of 300 Area laboratory solid wastes. Low-activity wastes were received from the following facilities: 303, 305, 306, 309, 313, 321, 324, 325, 325-A, 325-B, 326, 327, 329, 333, 340-Complex, 3706, 3707-C, 3718, 3730, and 3732. Some 1100 Area waste material was also received. These facilities all handled radioactively contaminated, or potentially contaminated, waste from operations or laboratory areas, including the hot cell areas. Moderate and high-activity (remote-handled) wastes were received from the 327 radiometallurgy hot cells, 325-A hot cells, the 325-B (analytical) hot cells, occasionally from the PRTR - 309 building, and later from the 324 hot cells. The low to moderate activity dry solid wastes were disposed to trenches and moderate to high-activity wastes were disposed to drum storage units and caissons. Some exceptions to this general rule did exist. The 325-A hot cells disposed of moderate and high-activity wastes to the trenches in concrete/lead-shielded drums (Keene 1961). The 325-B hot cells also used concrete shielded drums to dispose of hot cell waste (including cleanup debris), used laboratory containers and glassware, and spent instruments and equipment. In addition, plutonium residues were encapsulated in concrete, and placed in lead and concrete shielded drums at the 325 building by the 340 building operators servicing various organizations and facilities, including the 308 building.

Trench #1 was the first waste burial structure constructed at the site. Backman (1964) states that "In accordance with instructions from the AEC, use of the "Wye" burial ground will be continued only until the capacity of the trench is exhausted." This is interpreted to mean the northern most trench, labeled Trench #1 (Figure 2-6). It was not until September 24, 1963 that any mention of placing drum storage units in the burial ground was made (Berreth 1963). Backman (1963) cautions that more 300 Area facilities are now working with plutonium, in addition to mixed fission product (MFP) type radionuclides. Backman proposed plutonium segregation, and caution in using the new WYE burial ground facility for its disposal.

Backman also suggested following the AEC recommendation to close the 300-N burial ground as a "contamination control measure" (Backman 1963a). The AEC was beginning to recognize the importance of public perception of AEC's operation and control of government installations around the United States. If a large contamination spread was to occur at the 300-N burial ground, the only Hanford Site access road may be closed. At this same time a new

highway, State Highway 240 (the McCormack highway) was being constructed through the southwest quadrant of the Hanford Site. The AEC believed the agency would be found negligent if it made no effort to control radioactive contamination releases to the general public. It was under this scrutiny that the decision was made to close the 300-N burial ground. Evaluations were also began to consider the future of the 618-11 burial ground.

Trench wastes included concrete and lead shielded 55-gallon drums, nonshielded 55, 30, and 15-gallon drums or cans, spent control waste system (CWS, later called high efficiency particulate air HEPA) filters, wooden boxes, cardboard cartons, and failed equipment. Highly penetrating beta/gamma waste, including TRU radionuclides, was buried in the shielded drums. Cardboard carton wastes were typically small items contaminated with MFP, by-product, and TRU radionuclides such as rubber gloves, cloth and paper wipes, plastic sheeting and liners, masking tape, and failed or used equipment. Steel drums or cans were often used for large, heavy, or sharp tools or failed equipment, and for contaminated lead bricks or shielding. Some wooden boxes were used to dispose of contaminated lead bricks and shielding pieces, broken non-irradiated fuel pieces, and other metal waste. The CWS were typically wrapped or lined with plastic and placed in the original cardboard container used by the manufacturer. Items including both CWS and laboratory waste, typically read from a few mR/hr to 500 R/hr at contact (Appendix A). The cartons with high dose rates were typically placed in the middle of the carton stack to reduce worker exposure.

Caissons were the last burial structures placed at the 618-11 burial ground. Because of high radiation doses (beta/gamma shine) from vertical drum storage units, offset chute designs were conceived. The recorded caisson design drawings are dated January 10, 1964 (Graybeal 1964).

Caisson wastes included much of the same waste materials, but radiation readings were in the thousands, to tens of thousands, R/hr at contact. The caisson wastes were typically sectioned in hot cells using master slave manipulators so the waste components could fit into smaller waste disposal canisters. Canisters used included metal paint cans, five-gallon buckets, and slip-lid metal cans with tape seals; etc. The cans were sealed, crimped, or closed and loaded into casks for shipment to the burial ground.

The radioactive and other hazardous materials known, or suspected to have been buried at the site included solid metallic sodium; beryllium residues; contaminated metallic lead shielding; technetium oxide; promethium oxide (very soft energy beta, hard to detect); zirconium cladding material; potentially ignitable metal turnings; thorium oxide; other thorium compounds; enriched, normal, and depleted uranium compounds; and MFP materials. Radionuclides known, or suspected to be present include C^{14}, Co^{60}, Zn^{65}, Sr^{90}, Ru^{103}, I^{131}, Cs^{137}, Ce^{144}, Pm^{147}, Ra^{226}, Th^{232}, U^{233}, U^{235}, Np^{237}, U^{238}, Pu^{238}, Pu^{239}, Pu^{240}, Am^{241}, and Cm^{244}. The Pu^{240} content was typically 6% (weapons grade), but later PRTR test fuel was produced with up to 12% Pu^{240}. Residues of that fuel were thought to be disposed at 618-11. Numerous other fission products are present as well as salt residues from salt cycle work (KCl, NaCl, etc.). Fuel residues would be mostly oxides, but could include metals and metal alloys, carbides, nitrides, carbonitrides, and halides from the salt cycle work.

The 618-11 burial ground was permanently closed on December 31, 1967. The entire burial ground was backfilled and covered with four feet of soil. Perimeter radiation concrete posts (1.5 m high and 0.3 m in diameter) were fitted with stamped brass radiation hazard markers that included topographical coordinates. These markers installed in 1968 are shown in Figure 2-4 (Cadwell 1971, Corley 1968 and Hall 1967). Radiation surveys taken in the early 1980s showed continual ground contamination at the site. The 1983 Site Assessment indicated the site was stabilized by grading and backfilling with two more feet of soil (WHC 1983) Stabilization was completed June 9, 1982. Immediately following stabilization, the site was seeded with crested wheat grass and irrigated for six weeks. The present contour of the site varies from about one to four feet above the surrounding grade (Figure 2-17).

2.4 DISPOSAL ACTIVITIES

Appendix C describes some of the standard low-activity containers that were used to dispose of the 300 Area wastes to the 618-11 burial ground. Cardboard cartons and other low-level activity wastes were collected and placed in load luggers. The containers (boxes, load luggers, and drums) were loaded on a flatbed truck trailers and transported to the burial ground for disposal. Containers with higher dose readings were loaded near the tail of the trailer so they were further from the driver and the first to be offloaded. Drivers transporting high-activity radioactive shipments sometimes switched at a mid-point to control the personnel dose of the driver. The load lugger contents were dumped into the trenches using a lift/dump mechanism on the flatbed. Wooden boxes and drums were off-loaded using a motor crane or similar device.

Appendix A addresses several cardboard cartons that read up to 500 R/hr at contact. Some of these high-activity cartons contained CWS filters used for cleaning the hot cell discharge air. Later, concrete filter burial boxes were procured as shielded container packages for high-activity CWS filter waste.

Figure 2-17: Present Contour of 618-11 Burial Ground

During this same time period, unshielded cartons were removed from the hot cells using a leaded cave. The four-sided cave (front and bottom removed) was set on the forks of a forklift and an empty carton slid inside the lead cave. The forklift was driven up to the hot cell where a port covering had been removed. The carton was then filled with waste items or the CWS filter from the cell. The fork lift was moved away from the cell and the cell port covering was reinstalled. The carton was closed and taped shut. The employee closing and taping the carton received a high dose rate. The box was then transported to the load lugger and shoved off the forks.

Figure 2-18 clearly shows a load of cardboard boxes disposed at the west end of Trench #2. A bulldozer shoved the spoil pile into the trench and drove over it as the trench filled, similar to Figure 2-19. Trench waste was covered with a minimum of four feet of soil.

Trucks, unloading waste, and other heavy equipment drove over filled trenches (Figures 2-19 and 2-20). Activities at the 618-11 burial ground seemed to parallel these early trench waste-fill activities. The cardboard boxes and wooden boxes would have been badly damaged. Subsequent failures of the containers could cause trench subsidence to be a problem.

Reducing the volume of the waste void by various methods was suggested to control subsidence following burial ground closure. It was feared subsidence might cause wastes to be exposed (Backman 1963a). It appears that subsidence was a primary issue in the design of caissons (Gerber 1992). However, it should be noted that without accurate container type, exact location, and waste records, conclusions or corrective measures to subsidence issues are difficult (Kibbe 1992). Caisson and burial container static and live-load stresses were more carefully considered in the design of waste containers after several subsidence problems occurred in other burial grounds (Shirley 1980). This occurred, however, after drum storage units and trenches were filled at the 618-11 burial ground. No drum failure analyses, whether caused by corrosion or static soil loading, have been found for 618-11 storage containers.

Hanford Site soil corrosion rates of steel drums in direct soil contact show a general corrosion rate of two to six mil/year (Duncan 1992). New-condition, well-painted drums exhibit the minimal corrosion rate while reconditioned or surface-damaged drums exhibit the maximum corrosion. Pitting corrosion rates are more aggressive, ranging from 3.5 to 9 mil/year. The 53 mil (0.053 inches) nominal walls of the typical U.S. Department of Transportation (DOT) 17H or 17C drums are expected to have lost integrity. Since these are the drums used to build the drum storage units, the structure of the unit itself is considered lost.

Figure 2-18: Cardboard Boxes in Trench #2

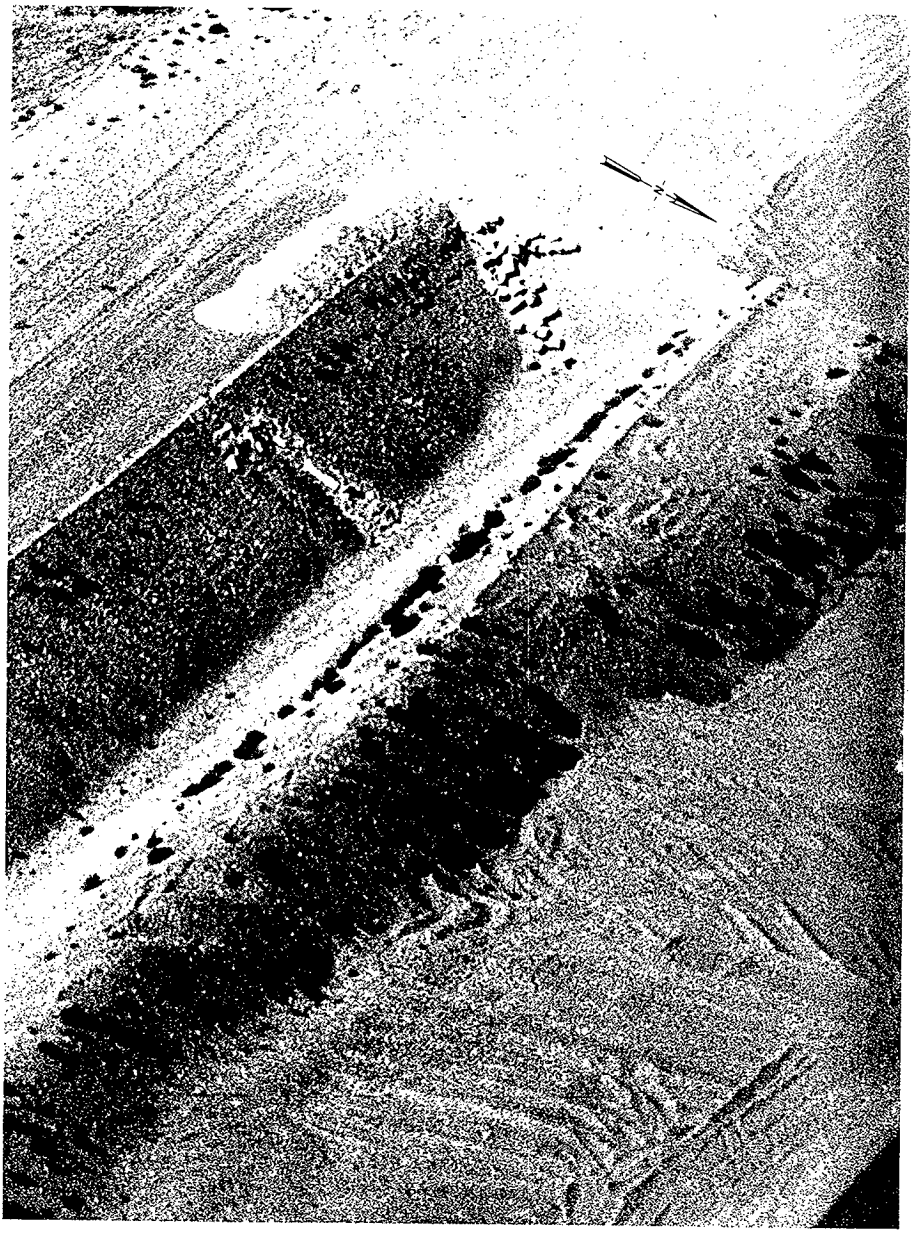

Figure 2-19: Covering and Leveling Over Filled Trench

Figure 2-20: Dumping Waste at a 200 Area Trench

Before September 1963, all high and moderate-activity waste that could not be trench disposed was sent to the 618-10 burial ground for disposal in the drum storage units. This minimized radiation exposure to drivers and other waste workers. Milk pail and gatling gun cask wastes were first disposed in the 618-11 drum storage units from the 327 radiometallurgy building in September 1963 (Appendix E and Berreth 1963). Casks wastes from the 325-A building radiochemistry hot cells were disposed to the 618-11 drum storage units in one-ton and seven-ton casks beginning in January and March 1964, respectively (Appendices A and E).

The intermediate and high-activity wastes were transported to the 618-11 burial ground on specifically designed flatbed trucks. Casks were mounted on the bed with dump chutes installed through the bed as waste discharge channels. The drum storage units and caissons were filled beginning at the east and proceeding west. (This was opposite of trench fill). Figures 2-9 and 2-21 depict the initial cold run of the 325-A cask hauling truck. The truck was to go through the "standard run" with the new seven-ton and one-ton casks to check mounting elevation, clearance, and operability. After these photographs were taken on March 6, 1964, a15-gallon black iron can was shipped to the 618-11 burial ground in the seven-ton cask. The disposal of the 15-gallon can in a drum storage unit caused a contamination spread (Appendices A, H and I and GE 1962-1964).

Once the truck was positioned over the correct drum storage unit, the waste could be discharged. Figure 2-22 shows the standard waste dump operation. The operator and the radiation monitor removed the drum storage unit lid by pulling the center ring strap pin up to release the four hooks that held the lid on, and opened the cask bottom waste chute door. The operator would then pull the cask locking lever mechanism back and the waste containers would be discharged into the drum storage unit.

The radiation monitor would stand with his instrumentation to monitor radiation "shine" as the waste discharged, as shown in Figure 2-22. Typical shine or flash beta/gamma discharge doses would be one to five R/hr out of the drum storage unit. Discharge doses from the offset caisson chutes were significantly less. Otherwise, the only difference between waste discharges into caissons versus drum storage units was that caissons had hinged lids instead of removable ones.

Repeated discharge of moderate and high-activity waste into drum storage units continued until the following conditions were reached:

- Dose at ground level reached a predetermined operational level, usually 15 R/hr.
- The drum storage unit was full.
- Particulate contaminants were found outside the top of the unit being filled as a result of container integrity problems, or from dispersal of previously disposed waste caused by blowback or mishandling.

When one of the fill-completion criteria was met, the drum storage unit was capped with a concrete plug. The next waste discharges would occur at the drum storage unit to the west of the completed unit. Waste spills at discharge did happen. Figure 2-23 shows lids jarred off

five-gallon paint cans as they hit the concrete bottom of the eight-foot diameter corrugated steel caisson. The waste caisson shown is a typical beta/gamma type unit located in the 200 West Area. The waste container fall distance is about the same as for the 618-11 caissons (25 ft.), but the caisson in Figure 2-23 has a concrete floor; 618-11 caissons had earthen floors.

Figures 2-24, 2-25, and 2-26, as well as Figure 2-23 show containerized high-activity wastes disposed to caissons in the 200 West Area. The photographs were taken over 13 years. The photographs demonstrate the relatively intact condition of the waste containers in caissons. The 618-11 caissons differ from those shown in these figures in that they have a dirt bottom instead of concrete, so localized container corrosion may occur. After 33 years of corrosion to the drum storage units, it is surmised the units no longer have integrity. Therefore, waste canisters disposed to the drum storage units can not be expected to appear as those shown in the four figures. The concrete cap placed in and on top the drum storage unit at closure will add stability to the top of the unit, keep water intrusion low from the six weeks of watering the site at stabilization, but did introduce moisture to accelerate internal corrosion. Corrosion is expected to accelerate at each weld joint, perhaps breaking the unit apart. No subsidence has been reported at the drum storage unit areas (See Section 6.2).

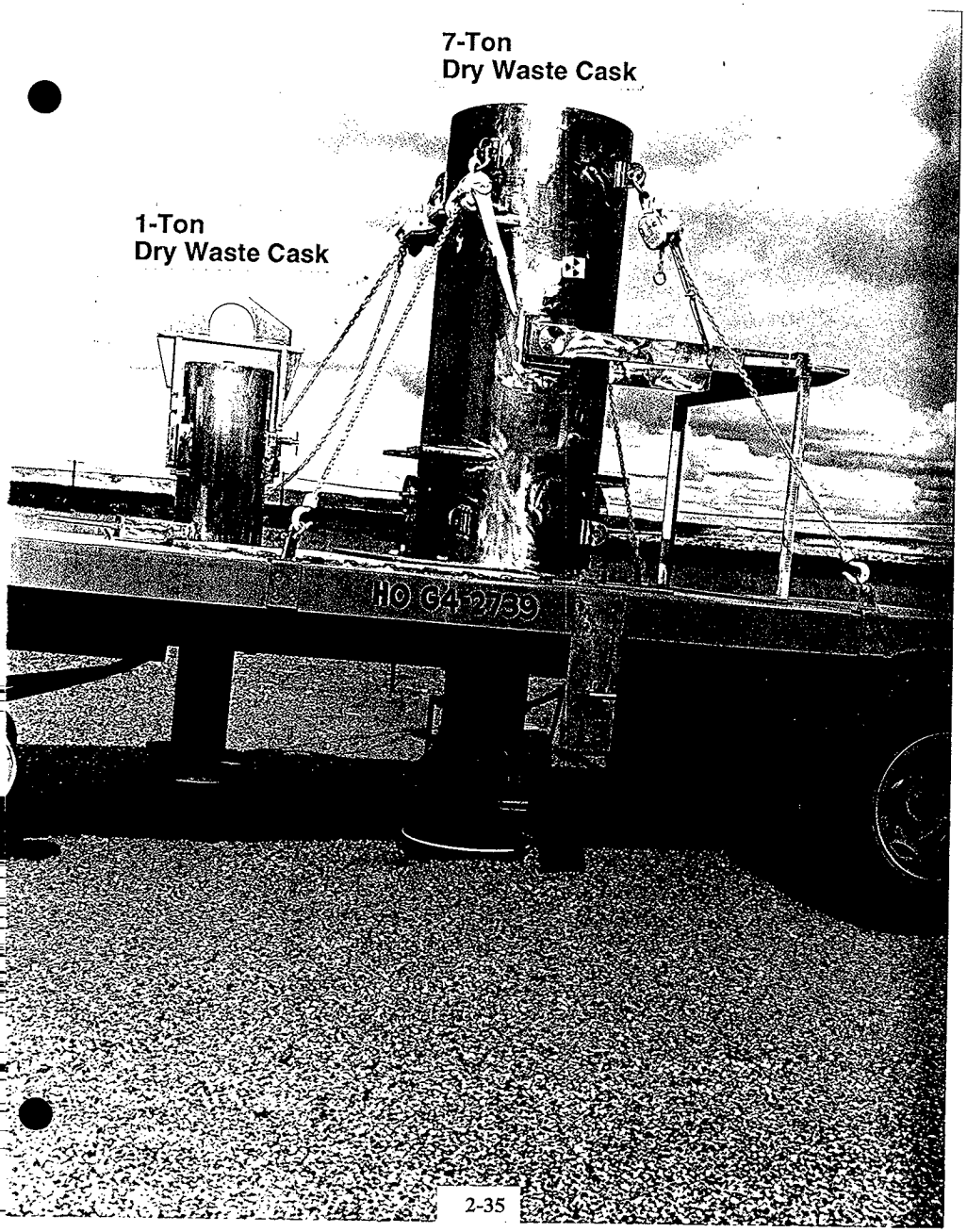
7-Ton
Dry Waste Cask
1-Ton
Dry Waste Cask
HO G4 2739

Figure 2-22: Cask Dump Operation

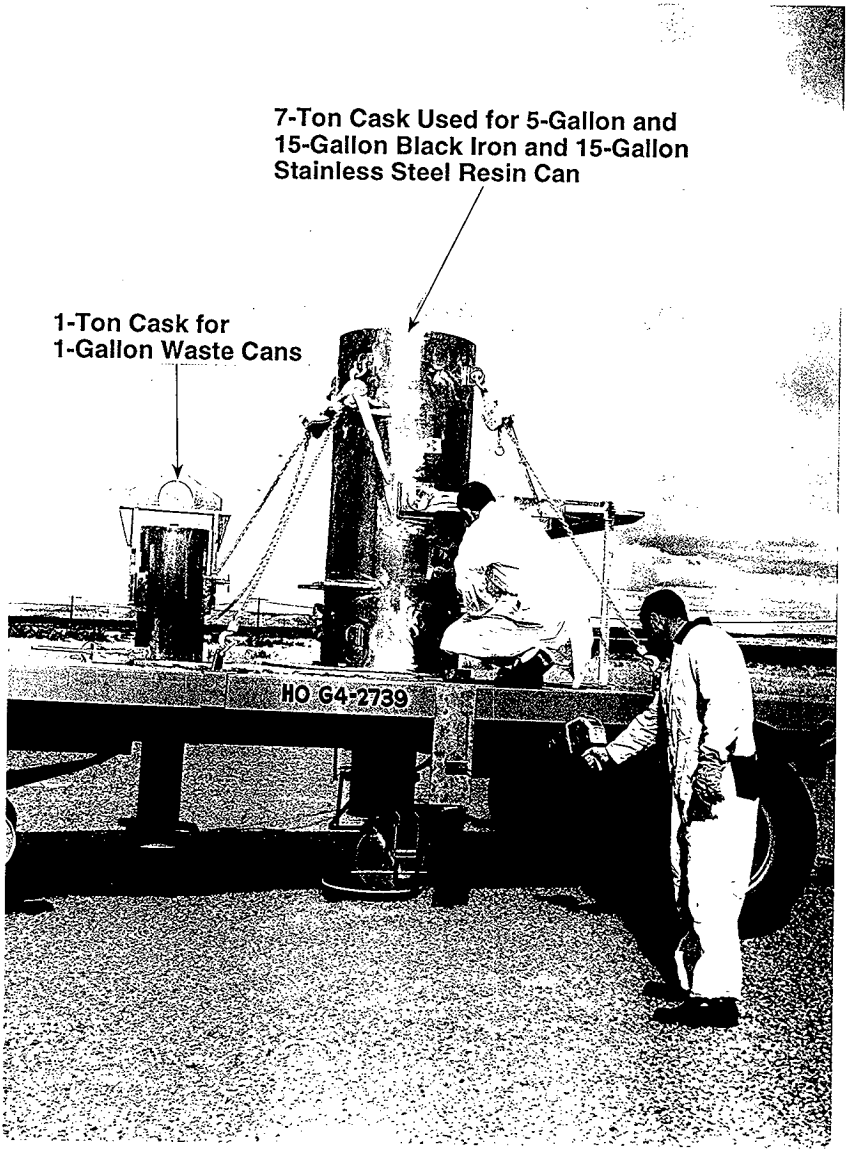

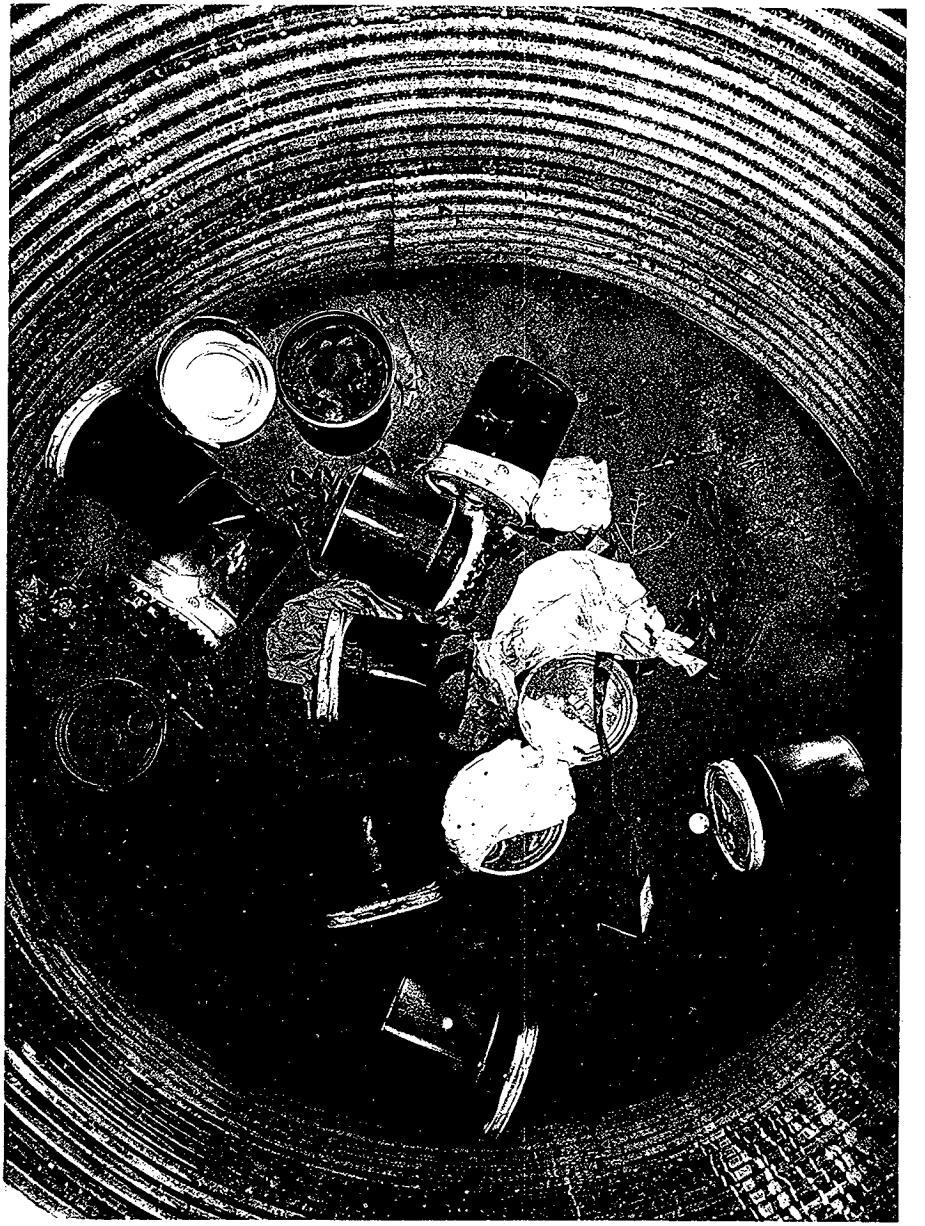

Figure 2-24: Condition of Waste Containers in Caissons (200 Area)

Figure 2-25: Condition of Waste Containers in Caissons (200 Area)

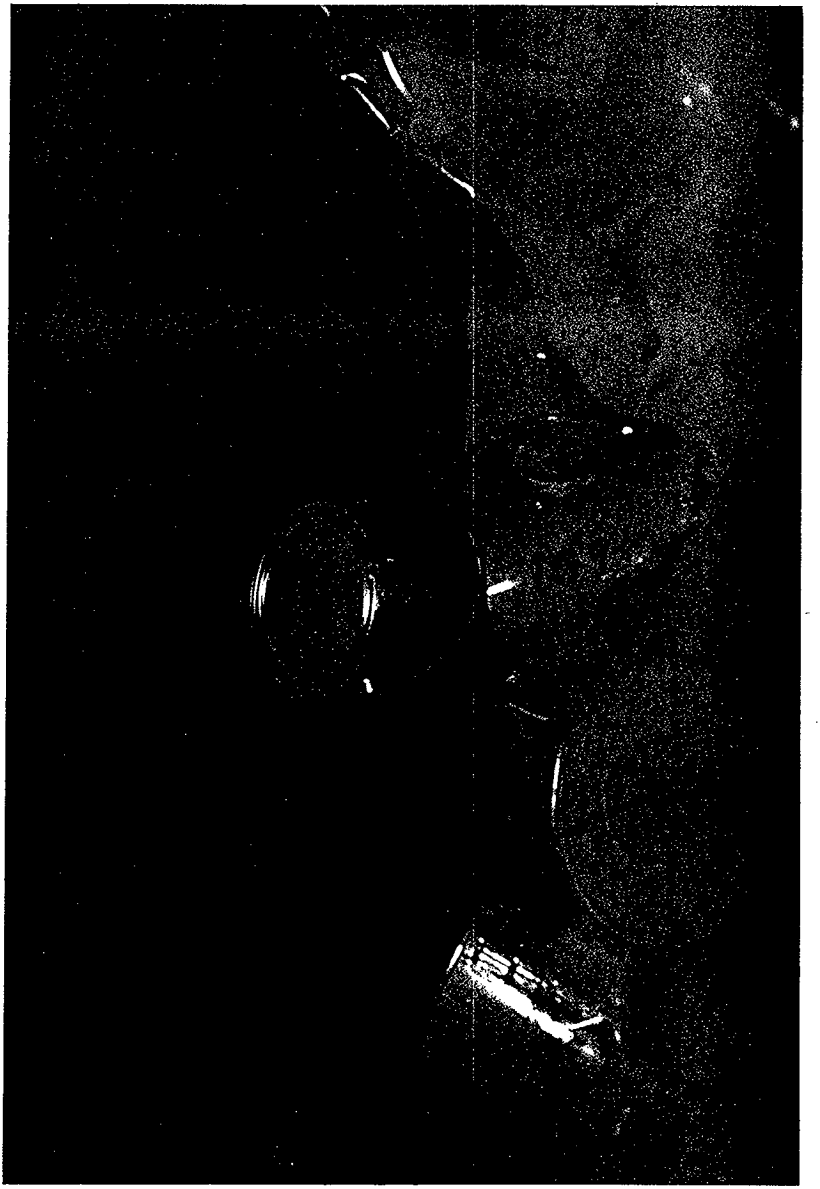

Figure 2-26. Condition of Waste Containers in Caissons (200 Area)

2.4.1 Disposal Containers

Low-activity wastes were disposed to the trenches using a variety of containers, including: cardboard cartons, steel drums (barrels), metal buckets, wooden boxes, self-contained equipment items, and plastic wrap. The weight and size of the disposed item typically dictated the type of container used. Appendix C shows some of the most commonly available standard containers used to dispose of low-level waste during the 1960s. A commonly used container or technique not shown in Appendix C is plastic wrap. Disposal items too large or cumbersome to fit in more typical containers were wrapped in four to 10 mil plastic sheeting and taped to seal the item from the environment. This method provided limited contamination protection and was only used for low-activity items too difficult to package otherwise. Plastic wrapped items were either loaded directly on a flatbed truck or, if limited to just a few items, were placed in load luggers for subsequent disposal. Load luggers, such as the one shown in Figure 2-27, were primarily used for cartoned waste. For record keeping purposes, they were estimated to hold approximately 100 $feet^3$ of waste (Backman 1964). Actual load lugger volumes could be up to 250 $feet^3$ if packed tightly and heaped to the top. Load luggers were available in several different sizes and shapes. Luggers used to hold waste cartons were typically equipped with a cover to protect the cartons from adverse weather.

Figure 2-27: Typical Load Lugger

Intermediate and high-activity wastes were generated exclusively in hot cell activities in the 325-A, 325-B, and 327 facilities. Before March 1964, the 325-A hot cell disposed its intermediate and high-activity wastes to the trenches in lead-lined concrete drums (Keene 1961, Appendix B). These drums had an eight-inch diameter culvert centered in the 55-gallon drum, surrounded by concrete on the bottom and sides (Figure 2-28). In addition, the culvert might also be surrounded by one or two inches of lead, depending on shielding requirements. The culvert was typically filled with three 0.15 feet^3 paint cans that were approximately seven inches high by 7.5 inches in diameter. The culvert was capped with a lead plate; then concrete was poured over the cap and into the remaining void space to fill the drum. The drums were made up and topped with concrete in a simple walk-in hot cell facility located in Room 530 of the 325 building. Nearby gloveboxes and open face hood areas were used as a support area for these wastes. Many radioactive liquids, including plutonium contaminated liquids, were solidified in concrete in this facility. The facility has been decommissioned and the walk-in concrete hot cell removed.

In January and March of 1964, 325-A hot cells began using the one-ton and seven-ton dry waste casks (Figure 2-22) to ship intermediate and high-activity wastes to the 618-11 burial ground. The casks were loaded horizontally with waste containers from the hot cells (Appendix C) and the wastes shipped to the burial ground in a vertical position. The one-ton waste cask transported one-gallon waste cans (three per shipment) to the burial ground, while the seven-ton waste cask transported the 15-gallon black iron cans, the five-gallon paint cans or buckets, and the 15-gallon stainless steel resin cans (Figures 2-29 and 2-30). The 15-gallon black iron cans and the five-gallon paint cans had lids held on by a screw-dog that was forced under the lip or into the can side. The 15-gallon resin cans had lids welded on. The one-gallon cans initially used a press-fit lid, but were later changed to lids held on with metal clips, because some lids came off during discharge, resulting in contamination at the burial ground.

The 15-gallon containers from 325-A hot cells were disposed to the drum storage units; the one and five-gallon cans were disposed to both drum storage units and caissons (Section 3.2). All dry waste disposal casks that transported intermediate or high-activity wastes to the 618-11 caissons or drum storage units were single lever, single dump casks, except for the 327 building gatling gun cask.

The 327 gatling gun cask held 12 one-quart sealed cans. The cask was transported to the hot cell in a horizontal position and mounted to the exterior of the cell at the loadout position. High-activity wastes were loaded into one-quart industrial cans that had lids sealed in the cell using a commercial canner. Two sealed cans were loaded into each barrel of the cask. The turret was rotated, via the ex-cell cask handle, and each barrel was loaded. After loading, the cask was detached from the cell exterior wall, removed to the cask load-out area, and loaded onto the flatbed truck for transport to the burial ground.

Figure 2-28:

325-A Hot Cells High Activity Waste Disposal Method 1960 to 1964

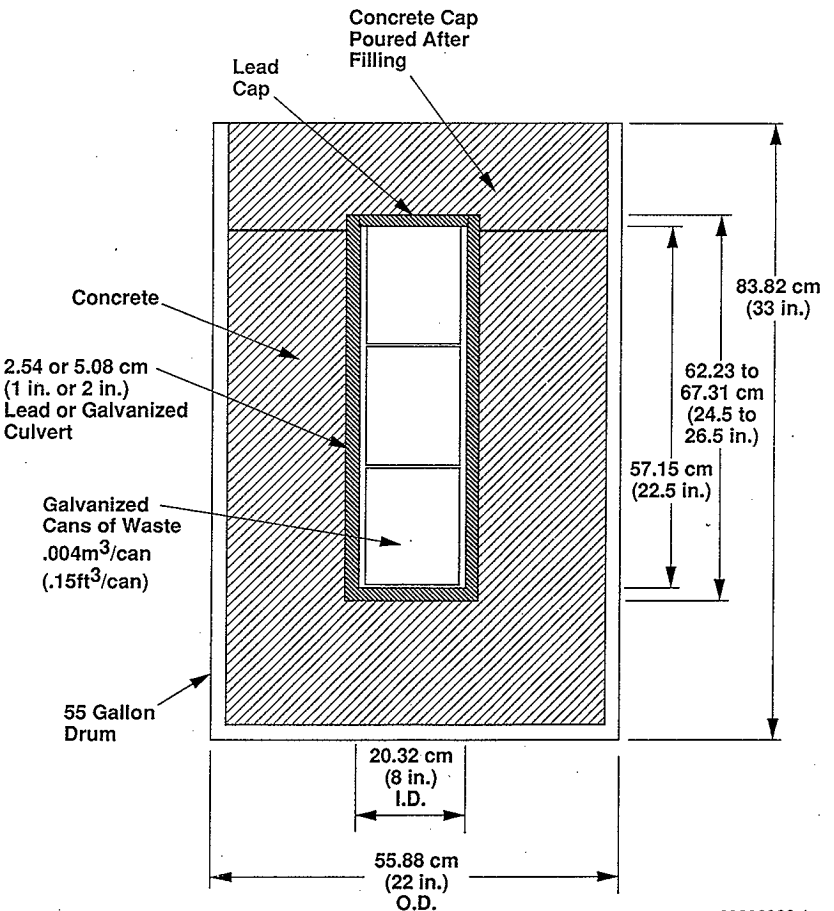

Figure 2-29: 325-A Waste Disposal Containers

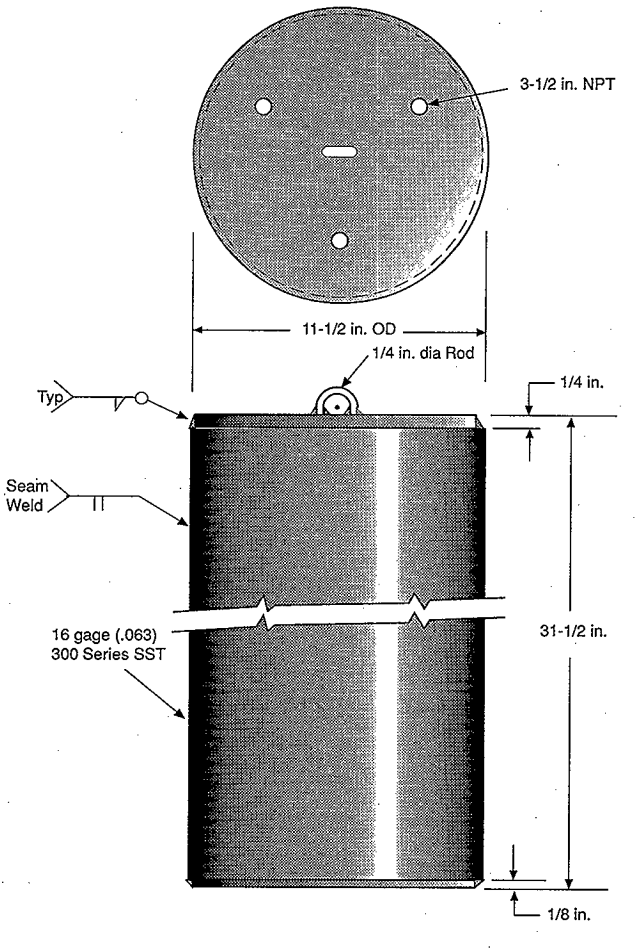

Figure 2-30: Resin Disposal Canister

The cask was transported in a vertical position to the 618-11 burial ground. The gatling gun cask was centered over a caisson or drum storage unit and the cans discharged, barrel by barrel, through the discharge port on the bottom (Figure 2-31). The cans were discharged as the turret was turned by an operator on the truck bed (Figures 2-32 and 2-33). The discharge operation appeared very much as Figure 2-22 depicts the 325-A hot cell waste disposal.

The gatling gun cask was used only to dispose of high-activity waste. The waste was first disposed to the drum storage units and later to the caissons. The records show that 80 gatling gun cans were disposed to the 618-11 burial ground between July 1, 1963 and December 31, 1963. Another 150 cans were disposed to the burial ground between January 1, 1964, and June 30, 1964.

Only one gatling gun cask was built. It was first used on May 25, 1959 (Gift HW-76192). A technical data sheet on the cask is included in Appendix C. The gatling gun cask was first used at 618-10 burial ground. After 618-10 was closed on September 16, 1963, the cask was used exclusively for high-activity disposals at the 618-11 burial ground. Records indicate the gatling gun disposal at the 618-11 burial ground ended before June 30, 1966.

The use of milk pail casks was the other method used to dispose of 327 building hot cell wastes to the 618-11 burial ground (Figures 2-34 and 2-35). An information sheet on the milk pail cask is provided in Appendix C. Milk pail containers were six liter aluminum cans that were loaded with dry waste in the cell. The pails were seven inches in diameter, 10 inches high, with a bail-type lifting handle riveted to the pail. The milk pails were made of extruded or spun aluminum approximately 0.025 inches thick. They were inserted into a plastic bag, that was held in place by a rubber band, before being placed into the cell to provide relative contamination protection to the outside of the pails. The seven inch diameter container allowed the waste cans to be inserted through a standard cell roof, and be large enough to accept about 20 grinding and polishing discs stacked horizontally (McCormack 1962). The cans were pulled up into the milk pail cask from the inside of the hot cell, using the wire bail handle.

After filling with waste, the milk pail was sealed before removal from the cell into the cask. The seal was made by adding a 20 wt% gelatin in water solution to the milk pail. The gelatin and water were mixed together and the gelatin completely dissolved outside the hot cell. Hot water had to be used to dissolve the gelatin. While still warm, the gelatin was transferred into the cell through a liquid transfer line. The gelatin was placed over the waste and allowed to cool and set up for 16 hours before the milk pail could be removed from the cell. The gelatin set could be checked either mechanically with the manipulators or visually.

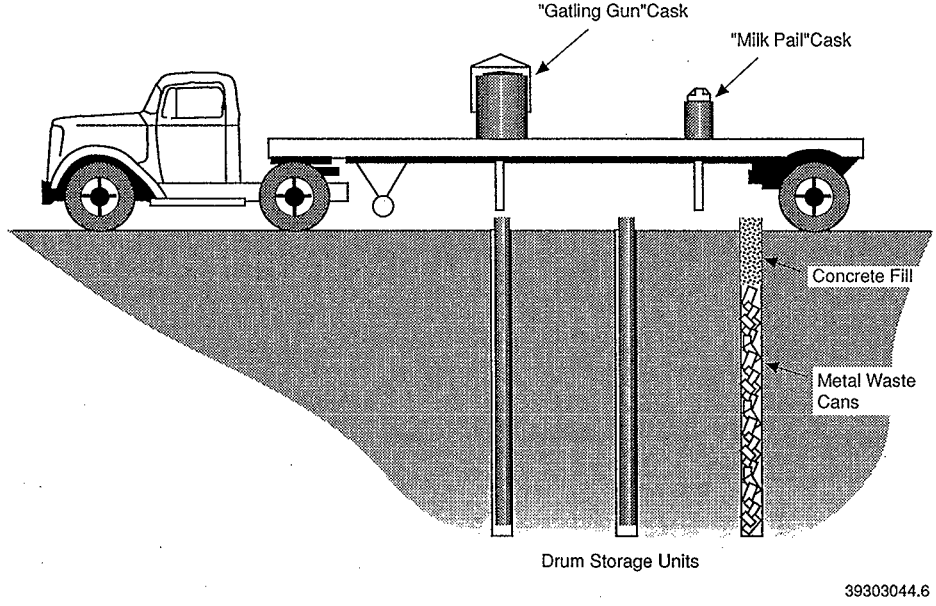

Figure 2-31: Radioactive Dry Waste Disposal

Figure 2-32: 5-Ton Gatling Gun Cask Isometric

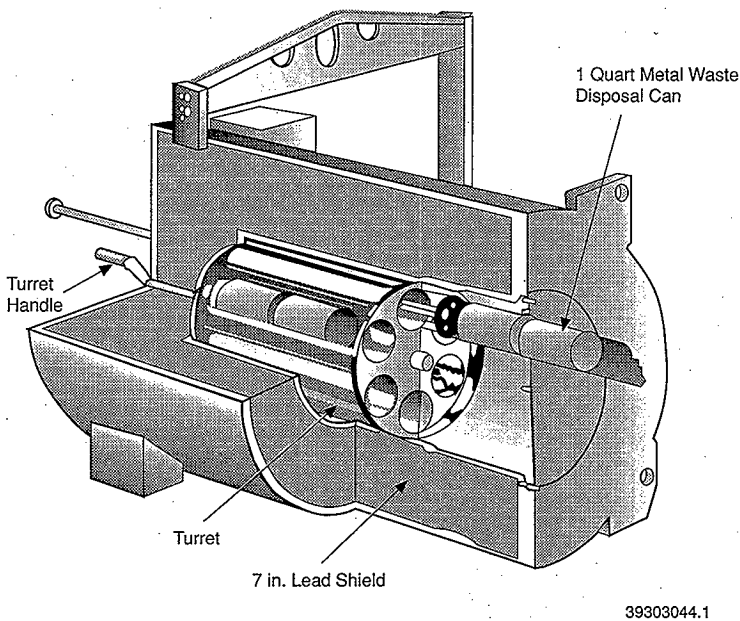

5 Ton "Gattling Gun" Cask
(Held 12 - 1 Quart Cans)

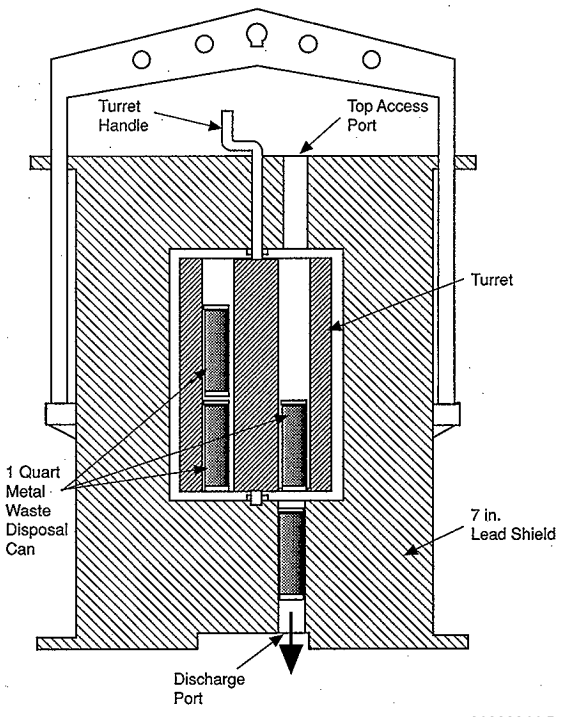

Figure 2-33: 5 Ton "Gatling Gun" Cask (Held 12 - 1 Quart Cans)

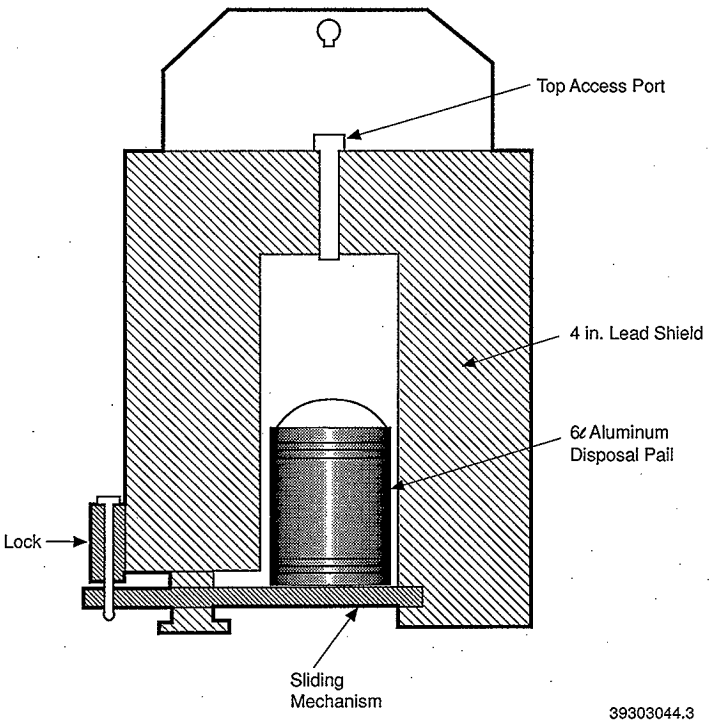

Figure 2-34: 3/4 Ton "Milk Pail" Cask

Figure 2-35: 3/4-Ton Milk Pail Cask Isometric

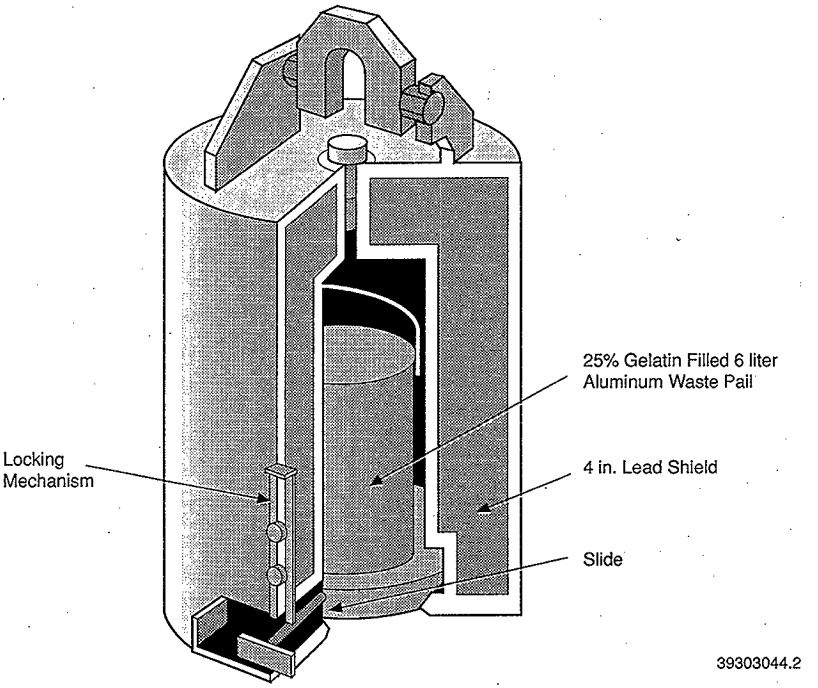

3/4 Ton "Milk Pail" Cask

When set, the gelatin solution was strong enough to hold a 10-pound lead brick rigidly in place. The gelatin also would effectively trap small particles and dust. No other lid or seal was considered to be required for disposal of the milk pail waste (Gift HW-76192). The 20 wt% gelatin was less expensive and was considered to be more efficient for sealing milk pails than a mechanical lid. It was also considered more satisfactory to work with in-cell than other encapsulating or sealing materials such as concrete or plaster of paris. However, the gelatin may have been jarred from the milk pails when the waste was dropped into the storage drums or caisson chutes. The gelatin may have also deteriorated over the years of storage. Gelatin is also degradable through biological action and other means, while concrete, grout, or plaster of paris are much more resistant. However, at that time, disposal was considered complete once the waste was disposed to the trench, drum storage unit, or caisson.

The milk pails had a 30 pound weight limit, including gelatin. That meant the each milk pail was limited to 17 pounds of waste, because the gelatin seal weighed 13 pounds. The maximum density of waste was restricted to <10.7 pounds/gallon. Once the gelatin was set and the 16 hour waiting period ended, the milk pail was removed into the cask through the roof of the hot cell by a wire hooked to the pail handle.

The milk pail cask was suspended over the hot cell on the crane with the bottom slide mechanism open and the cell top access port removed. A wire was run through the top access port of the cask into the cell where it hooked onto the handle of the milk pail. The pail was pulled up into the milk pail cask, and the bottom slide of the cask was closed and locked. A milk pail operating procedure written in the late 1950's is included in Appendix D.

The milk pail cask was loaded vertically onto a flat-bed truck specially designed for the cask and transported to the burial ground. At the 618-11 burial ground, the truck was positioned over the active drum storage unit or caisson. The milk pail was discharged by removing the cask locking pin and pulling the discharge lever. After discharge, the cask lever was pushed back and the lock secured. The area and cask were surveyed, any contamination cleaned up, and the unit was returned to the 300 Area.

Two milk pail casks were constructed for the 327 building. They were completed June 18, 1959, and July 20, 1961 (Gift, HW-76192). Records indicate that from January 1, 1962, until June 30, 1962, 198 milk pails were disposed of in the 618-10 burial ground, since no drum storage units existed at the 618-11 burial ground during this period (Berreth 1963). After the 618-11 burial ground was modified in August 1963 to provide drum storage units, the majority of the 151 milk pails disposed to burial grounds between July 1, 1963 and December 31, 1963 went to the 618-11 drum storage units. All milk pails disposed to burial grounds from September 30, 1963 to December 31, 1967 went to the 618-11 burial ground drum storage units or caissons.

Operations at the 618-11 facility were closed after new caissons were constructed in the 200 West Area. All waste from the 300 Area after December 31, 1967 was shipped to the 200 West Area for disposal in either the waste trenches or the newly constructed caissons.

After 1965, milk pail waste generation in the 327 facility was listed, in part, by 327 building radiation surveys, and also in building operational logs. The survey summaries are given in Appendix G. The radiation surveys and the milk pail operations listed in building logs will be discussed in Section 3.5.

Another disposal cask was used in the 325-B analytical hot cells. The cask held two one-gallon cans, and was sealed by a friction fit lid. The cask was loaded by backing it horizontally against the cell wall, sliding open the door, and pushing the cask chute into the cell for loading. The chute with the two cans was then withdrawn into the cask and the door slid shut.

A similar chute disposal system was used to dispose of the one gallon waste cans shown in Figure 2-25. However, the chute fell from the cask and lies at the bottom of the caisson with the waste. This particular chute would hold about 7 one-gallon paint cans.

The cask was then hauled to a drum storage unit or caisson in a modified pickup truck. The truck was designed to tip the cask up over the back of the bed in line with the drum storage unit or caisson as shown in Figure 2-36. The cask lid was opened and the cans dropped into the disposal unit. The truck became contaminated and is thought to have been buried at the 618-11 burial ground when it couldn't be sufficiently decontaminated.

2.5 WASTE SITE DATA DISCREPANCIES

Much of the characterization information previously written on the 618-11 burial ground does nothing more than discuss physical characteristics of the Hanford Site geology, climatology, hydrology, etc. Much of the information reviewed for this document was incorrect. Several documents contained or reprinted incorrect or unfounded information. Few documents written contain 618-11 burial ground and waste characterization information. The many personal interviews conducted during the course of this document research did little to help in resolving

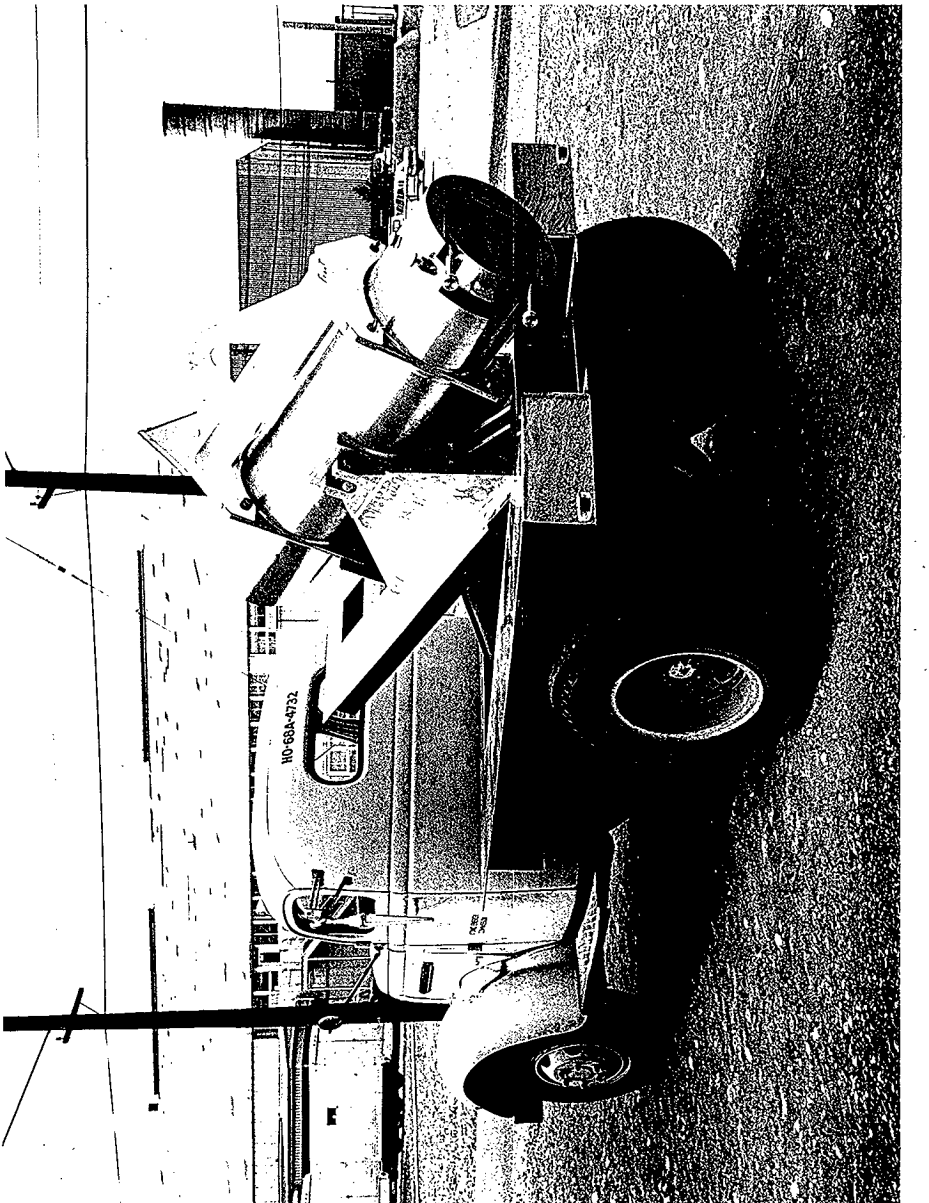

Figure 2-36: Tilt-Bed Truck for Cask Waste Disposal

these inconsistent issues. It should also be noted that many characterization documents, generated during the burial ground operation, were destroyed just a few years ago. However, several data pieces were found that provide characterization data. These data were made into record form, and can be found in Appendices A, E, F, G, and H of this document.

As an aid in evaluating inconsistences discovered during research for this document of existing 618-11 burial ground information, this Section, in conjunction with Sections 2.2.1 to 2.2.4, have been written. New information and documentation have been discovered and are presented for the first time in this document.

Several discrepancies exist in the data of the 618-11 burial site. These discrepancies show up in the documentation written during the past three decades to describe and characterize the site. Foremost, are the inaccuracies in the number of caissons and drum storage units at the site. Documents differ on the total number of drum storage units and caissons. The range varies from 12 trenches and 54 caissons (Pauly 1990) to three trenches, one large buried culvert, and three large underground tanks (Phillips 1977). This document reports three trenches, 50 drum storage units, and five eight-foot diameter caissons.

The most reliable reference for the number of drum storage units and caissons should be from the 300 Area Support Services Operations (Caldwell 1971). The letter indicates 53 drum storage units, one three-foot diameter culvert and three eight-foot diameter underground tanks (caissons) for dry storage. The recent EMI completed in 1995 (Figure 2-15), and the August 1964 aerial photograph of the site refute this count. It is clear there are 50 drum storage units. The caisson count is either five eight-foot diameter caissons or three eight-foot diameter caissons and one 12-foot long by eight foot diameter double chute caisson (Figure 2-11). To have installed a three foot diameter culvert during June to August 1964 is inconceivable, after so many contamination spread problems with drum storage units (Appendix H), contamination concerns by the AEC (Backman 1963a), and new caisson designs being evaluated (Graybeal 1964 and GE, 1962-1964).

In addition, the installation of a three foot culvert seems unlikely based on the Graybeal 1964 caisson drawings, which cites that two dry waste disposal tanks were installed (GE 1962-1964), and the survey spacing measurements (Figure 2-11). If the two Graybeal caisson designs were installed, the entire area between W2,939.17 and W2,906.67 would have been taken up, leaving no room for a culvert.

Several discrepancies exist in the site engineering drawing. The first burial ground layouts shown in H-3-9951 were done for 14 trenches, running east/west, to be contained in a plot 1,000 feet east/west by 1,500 feet north/south. That plot layout was never changed, and is still shown incorrectly on the current H-6-930, Revision 0, drawing issued April 3, 1979.

The drawing also shows a scale of one inch = 100 feet in the sign-off block, but labels the base plot layout at one foot = 100 inches and the "north portion enlarged" as

one foot = 50 inches. The north portion enlarged area shows 20 drum storage units in the northern row (N12,458.24) while the base scale view shows 21 units. The count of caissons and drum storage units in the other two rows is identical. Westerly grid coordinates are incorrect for the caisson and vent lid, located between W3,000 and W2,993.67. The caisson centerline shown at W 2997.17 and the neighboring caisson vent centerline shown at W2,993.67 should be revised.

The EMI of the site done in 1982 depicts three scattered drum storage unit images in the north row, one missing drum storage unit in the center row, and denotes another caisson at the western end of the center row (Phillips 1982). These discrepancies can be voided by enlargements of site photographs (Figures 2-7 and 2-14) and the EMI/GPR done in 1994 (Bergstrom 1997). The photographic enlargements clearly show three rows of drum storage units. A northern-most row shows 20 drum storage units and the southern-most row shows 10 units. The middle row is split into two segments, with an easterly segment of 10 drum storage units and a westerly segment of 10 units. All drum storage units are evenly spaced so as to match the Hanford drawing H-6-930. Three additional units at W2,939.17 to W2,906.67 appear as the "vent lid" waste burial facility storage units depicted in Detail "B" of drawing H-3-930. Figure 2-14 even shows the larger-diameter unit, shown as 36 inches O.D. at W2,906.67 on H-6-930. These photos, however, do not show the other caissons located between W3,008.67 and W2,982.17. The EMI done in 1995 clearly shows that only two caissons exist at the west, along N12,428.24 (Figure 2-15).

3.0 WASTES AND WASTE GENERATORS

3.1 HISTORY OF 300 AREA WASTE GENERATORS DISPOSING OF WASTE TO 618-11

When the 618-11 burial ground was opened in 1962, The General Electric Company (GE) was prime contractor for the Atomic Energy Commission (AEC) responsible for operating the Hanford Site. The burial site was constructed to dispose of 300 Area wastes. A map of the 300 Area facilities is shown in Figure 3-1. The major radioactive waste generating facilities during the 1960s are shaded. Figure 3-2 is a 1960s aerial view of the southern portion of the 300 Area showing the 309 building (PRTR), 308, 325, 324, 309 and other 300 Area facilities.

Several 300 area facilities supported reactor design and fuel development, and in so doing became radioactive waste generators. The PRTR first reached criticality in October, 1960. The PRTR facilities are shown in Figures 3-3 and 3-4. Test fuels were prepared and fuels were examined in the 308 building (Figure 3-5). Chemical Research and Development (R&D) for the PRTR activities, as well as other fuel fabrication and reprocessing studies, were conducted in the 325 building (Figure 3-6). Low-activity metallography work supporting the PRTR fuel was performed in the 326 building, along with general laboratory work and testing. Buildings 306 and 313 were used for fuel work, which occasionally generated uranium or other fuel-type waste. The 327 building activities were directed primarily at radioactive metallurgy, and post-fuel irradiation studies supporting those conducted in the 325 and 326 buildings. The 329 building was used for low-level counting work. In addition to counting radioactive materials, checking for residual radioactivity on apparently non-radioactive materials such as fruits and vegetables was also conducted. Most waste from the 329 building was designated non-radioactive. Plutonium-uranium extraction (PUREX) reprocessing studies took place in the 321 building, with support from laboratories in the 3706 building and other locations. Radioactive laboratories were still operating in the 3706 building until the mid-1960s. Operations for the 340 building included decontamination and waste handling activities in support of the other 300 area facilities.

Most reactor type work in the 1960s was conducted in PRTR studies or was preparatory work for fast-flux and high-temperature reactors like the Fast Flux Test Facility (FFTF) Reactor. The 308 building was used primarily for PRTR work and later changed to accommodate FFTF work. The 308 facility undoubtedly had the largest plutonium inventory of any 300 Area facility during this time period. The 308, 309, 325, 327, and 326 buildings were the largest solid-waste generators in the 300 Area. Initially, however, only the 325 and 327 facilities generated medium and high-activity wastes. The PRTR reactor operations also generated some medium and high-activity wastes. Later, remote handled wastes were generated from the 324 hot cells.

General Electric Company transportation organization handled the carton radioactive waste. Load luggers similar to the one shown in Figure 2-27 were placed outside each waste

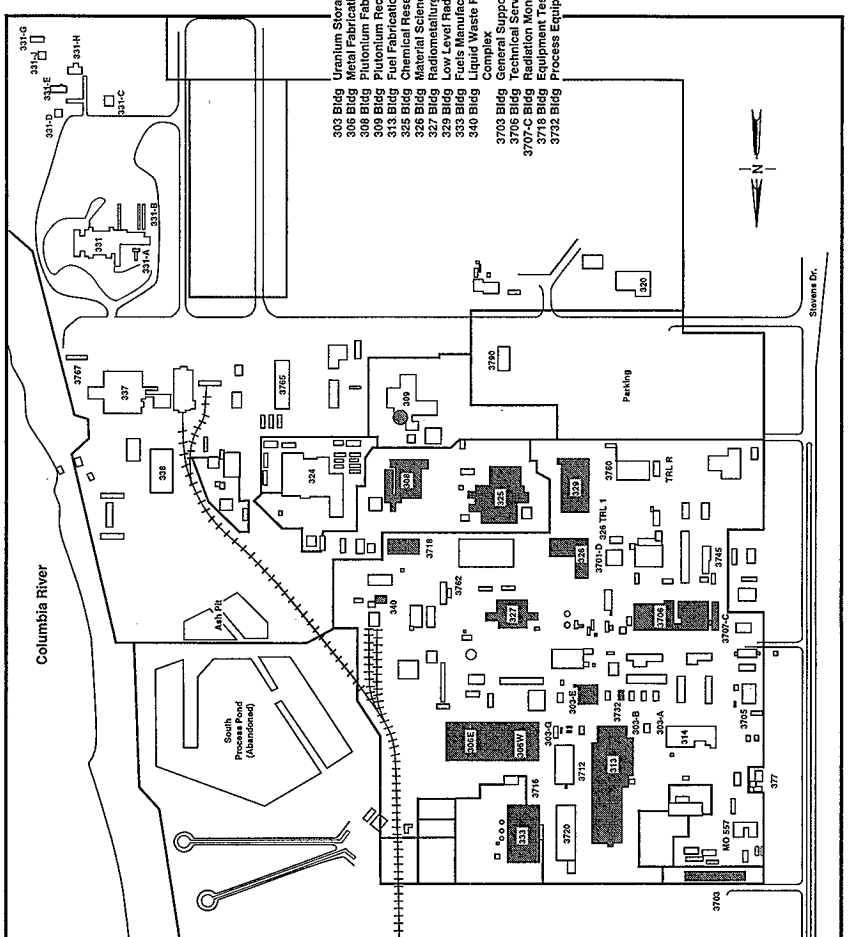

Figure 3-1: 300 Area

Figure 3-2: Southern ...tion of 300 Area

Figure 3-3: Plutonium Recycle Test Reactor (PRTR)

Figure 3-4: View of Schematic (PRTR)

Plutonium Recycle Test Reactor and Building

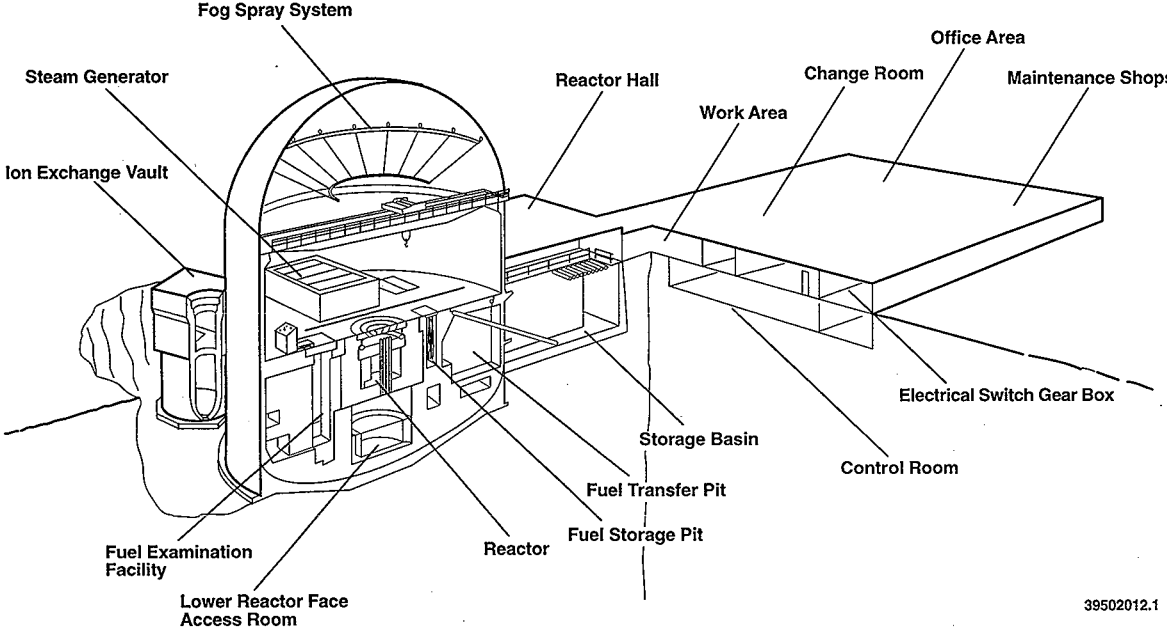

Figure 3-3. 308 Building

Figure 3-325 Building

generating building and the luggers were checked on a routine basis, usually weekly or twice a week for more active facilities like the 325 building. Luggers of carton waste at such buildings always appeared full and overflowing. Less active facilities called for service when the lugger approached being full. The system continued to operate in a similar manner when Battelle Laboratories (PNL]) took over most 300 Area operations on January 1, 1965.

The carton waste was dumped or otherwise unloaded into the burial ground trenches (Figure 2-20). A lugger delivered to the 618-11 burial ground was considered to contain 100 $feet^3$ of waste, although luggers varied in size and often varied in how they were packed. Many luggers were packed beyond their normal capacity. However, 100 $feet^3$ was convenient for accountability (Backman 1964). Transportation workers estimated about 10 luggers were transported weekly to the burial site. This average is supported by Backman for July and August of 1964 (Backman 1964). The PNL radiation monitoring records from 1965 and 1966 (conservative values) indicate that waste was buried from 133 luggers in 1965 and 101 luggers in 1966. This accounted for a total of 23,400 $feet^3$ of waste.

Much of the drum storage and caisson disposal work was conducted, or at least coordinated, by employees from the 340 complex (Figure 3-7). Site transportation employees handled waste shipping, but the 340 workers performed most of the actual disposal work activities. Radiation monitoring technicians also accompanied the shipments, or met them at the burial site. As cited in the previous paragraph, some of the few records still available today are radiation survey records. The survey records provide some information on waste movements, shipments, and disposal activities. The records provide good information on the radiation status of the activity, but often contain incomplete shipment and disposal data. It is hoped that the survey records and other related information will help fill gaps in the burial records.

Figure 3-7: 340 Complex

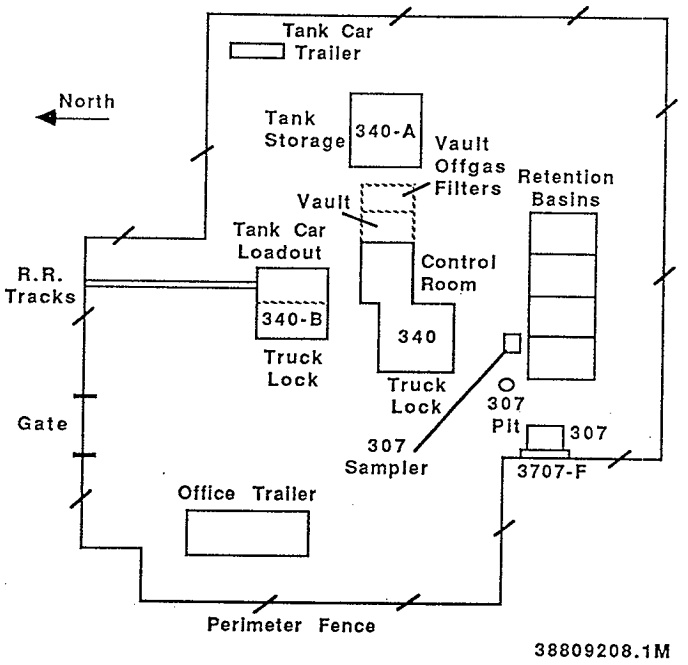

Some activities conducted in 300 Area facilities that would have affected the types and form of waste materials generated are given below:

- Development and fabrication of test reactor fuels
  - Determine compositions
  - Perform quality control
  - Determine physical characteristics
  - Determine chemical characteristics
  - Measure temperature
  - Measure oxygen effects
  - Prepare test pins and assemblies
  - Conduct fuel tests.
- Cladding and fabrication alloy development
- Work on control rods and reflectors
  - Boron carbide
  - Cadmium compounds
  - Beryllium work
- Radiation damage analyses
- General materials technology improvement
- Special reactor targets
- Radiography
- Metallography
- PUREX reprocessing development
- PUREX waste studies
- Radionuclide separations
- Neptunium recovery
- Cesium and strontium separations
- General analytical support
- Plutonium Recycle Test Reactor (PRTR) operations and support services
- 340 Complex decontamination and waste support services

3.1.1 History of the PRTR and Fuels Fabrication Facility

The PRTR started reactor operations in 1960. The Plutonium Fuel Laboratory (PFL) in the 308 building providing the fuel for PRTR. By 1967, more than 326 kg of plutonium had been fabricated into PRTR fuel (Wittenbrock 1967). All but the first core was mixed-oxide fuel with the percent plutonium increasing from 0.48 wt% initially to 5 wt% and higher (Gerber 1992) before the PRTR was shut down in 1969. Major PRTR facility operation activities are given in Table 3-1.

The PRTR reactor was a vertical pressure tube reactor, moderated and cooled by heavy water. Fuel elements were charged and discharged from the reactor top face through 85 pressure tubes made of Zircaloy-2. The reactor itself was housed in the protective, reinforced-concrete dome that became a 300 Area landmark. A complete description of the facility can be found in the *Final Safeguards Analysis* (Wittenbrock 1959). The PRTR schematic (Figure 3-4) shows the major reactor areas and the office area that together make up the 309 building.

Initially, the reactor was fueled with plutonium-aluminum alloy elements with sintered uranium dioxide cores. Later, plutonium-uranium dioxide material replaced the metal alloy elements. The oxide material was pressurized water reactor (PWR) grade sintered to 94 percent theoretical density and jacketed with Zircaloy-2. The fuel rods were 0.5 inches in diameter with a 30-or 60-mil jacket, and 7 feet 4 inches long (Wittenbrock 1959). Each succeeding reactor load was fitted with higher plutonium driver amounts.

Solid wastes generated during these operations were primarily disposed to the 618-11 burial ground as laboratory cardboard cartons and an occasional cask. It is calculated that the direct operations at PRTR, the fuel fabrication operations at PFL, and other support services would have incurred at least a 1-to 2-wt% plutonium operations loss. This generally agrees with fabrication records of the Babcock and Wilcox Plant which incurred about a 2-wt% process loss on the fabrication of FFTF fuel from Cores 1 and 2. The 2 percent total was reduced to about 1.5 percent (25 percent reduction) because part of the waste material was designated as scrap and reprocessed for recovery (Bradley 1978). This means that at least 4,875 grams of PRTR plutonium were lost to waste during the fabrication process, assuming a 1.5 wt% plutonium loss.

Table 3-1: The Major PRTR Operational Activities Chart.

Date	Activity
1956	PRTR Activities Initiated
1958	PRTR design completed PRTR construction started PRTR start-up tests began
October 1960	Initial criticality reached
May 1961	Full 70 Mw power reached Reactor fuel tests started
Sept. 1963	Rupture loop begins operation Gas loop tested
Sept. 1965	Major radiation contamination incident (Type A Event - fuel release, clean-up, and decontamination.)
July 1966	Tests resume on batch core experiments
Mid-1968	P-4 Valve problem identified and repairs started.
Mid-1969	AEC stopped repairs, repairs later completed, and PRTR was shutdown.
1971-1972	Fuel shipped to PUREX.
1974	Fuel basin clean-out Dome as a clean shop

The fuel fabrication process for PRTR included converting the material to oxide or another fuel form, making pellets, encapsulating the pellets, analyzing the fuel, performing physical tests and measurements, and doing metallography. Figure 3-8 shows a schematic of the first floor of the 308 building where the PRTR fuel was fabricated.

Figure 3-8: Schematic View of Plutonium Fuels Pilot Plant

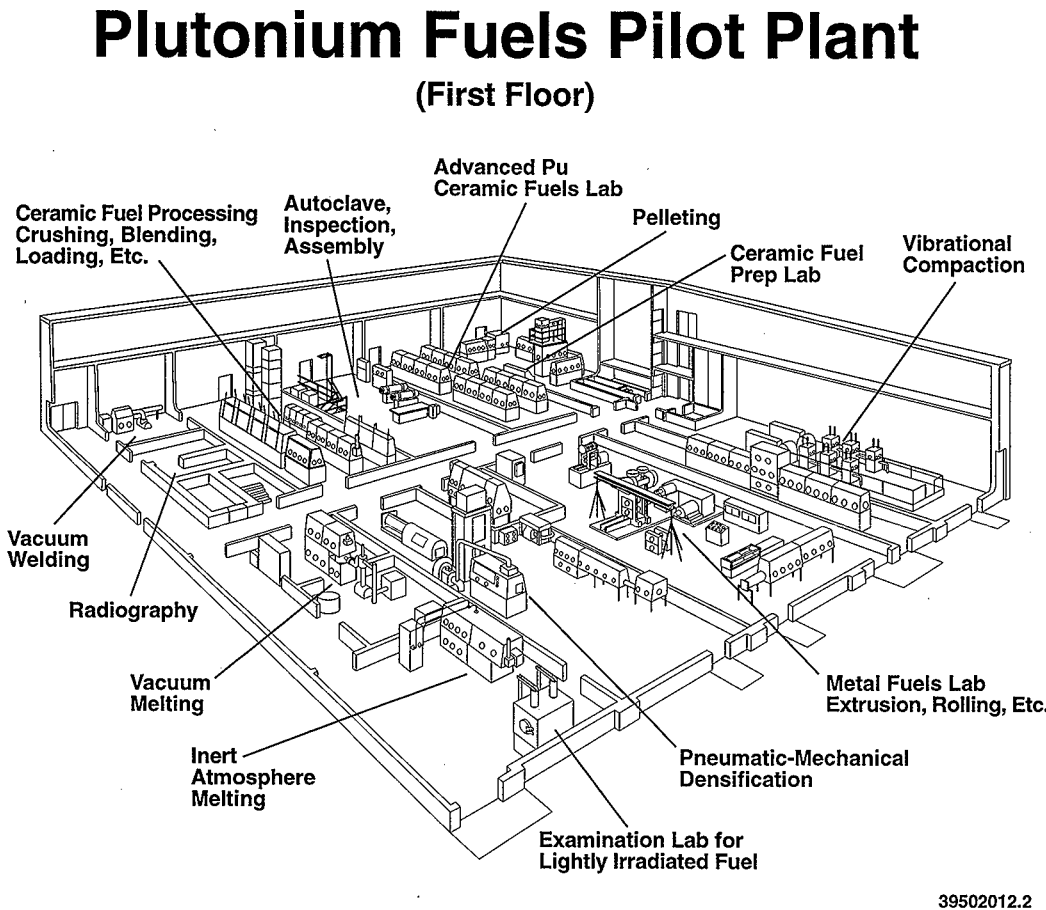

Most of the recognized plutonium waste generated from the 308 building went to the 200 West disposal areas, particularly in the later years. Non-fabrication and support service waste went primarily to the 618-11 burial ground. The 308 building shipped about half the waste carton material to the 200 West Area for disposal. The remaining waste was shipped to either the 618-10 or 618-11 burial ground. Other buildings and facilities including 327, 326, PRTR (309), 3706, 340, 321, and 324, shipped their waste to the 618-10 or 618-11 burial ground. The 325 building shipped carton waste primarily to the 618-11 or 618-10 burial grounds, but a small fraction of the waste cartons and a sizeable fraction of the concreted drums went to the 200 West Area burial grounds. (see Section 3.1.2) It was primarily the fuel fabrication operation, located in 308 and the basement of the 325 building, which sent waste to the 200-West Area.

The balance of the PRTR support organizations, including reactor operations, sent waste materials to the 618-11 burial site for disposal. Therefore, it is estimated that at least half of the projected plutonium in PRTR wastes, about 2,400 grams, was disposed to the 618-11 facility. The balance of the PRTR plutonium is at the 200 West burial trenches, or the 618-10 burial facility. Very little 300 Area waste went to the 200-West burial ground until late 1963 or early 1964.

3.1.2 History of the 325 Building from 1962 to 1968

The 325 building was constructed in 1953. A large addition, known as the high-level radiochemistry (325-A hot cells), was constructed on the east end from 1959 to 1960. The 325 building was one of the 300 Area facilities transitioned to PNL from General Electric at the beginning of 1965. A simple schematic of the hot cell and waste handling areas is shown in Figure 3-9. A detailed map of the main floor area is shown in Figure 3-10.

Activities in the 325 building consisted primarily of R&D, fuel reprocessing studies, isotope separations, analytical support, and ceramic fuels work. The R&D and related work was carried out primarily on the main floor in the middle and the east portions of the building. The analytical support work was conducted at the west end of the main floor. The ceramic fuels work and fuel material storage were in the basement. Some R&D and related work was associated with the 325-A hot cell. The 325-A hot cells consisted of A-cell, B-cell, and C-cell. The timeline and general activities carried out in these hot cells are listed in Table 3-2. A series of gloveboxes in the northeast corner of the building were used to conduct work in support of the hot cell operation. In addition, another series of hot cells known as the Analytical hot cells, or 325-B hot cells, were located at the far west end of the building. These hot cells supported the operation of the 325-A cells, and analyzed samples, primarily from 325-A cells.

The operations in the 325-A hot cells consisted primarily of pilot-scale and small plant-size production tests. Fuel reprocessing or radionuclide separation campaigns were also typical work

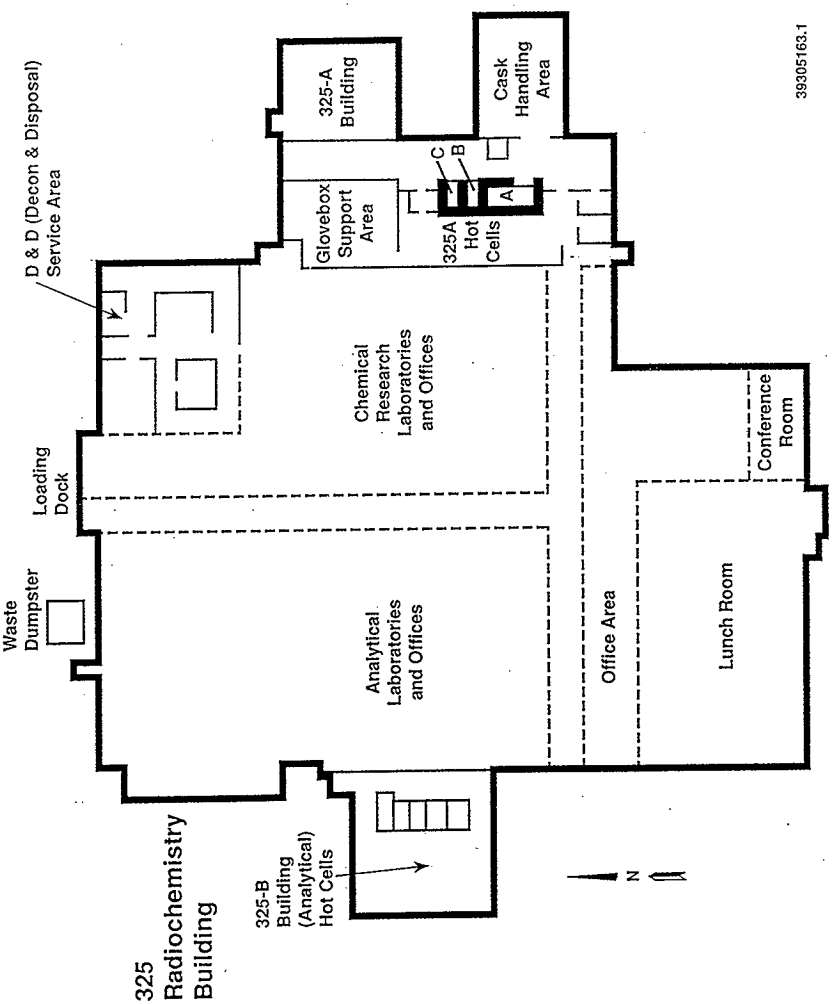

Figure 3-9: 325 Radiochemistry Building

Figure 3-10: 325 Building - First Floor

325 Building - First Floor

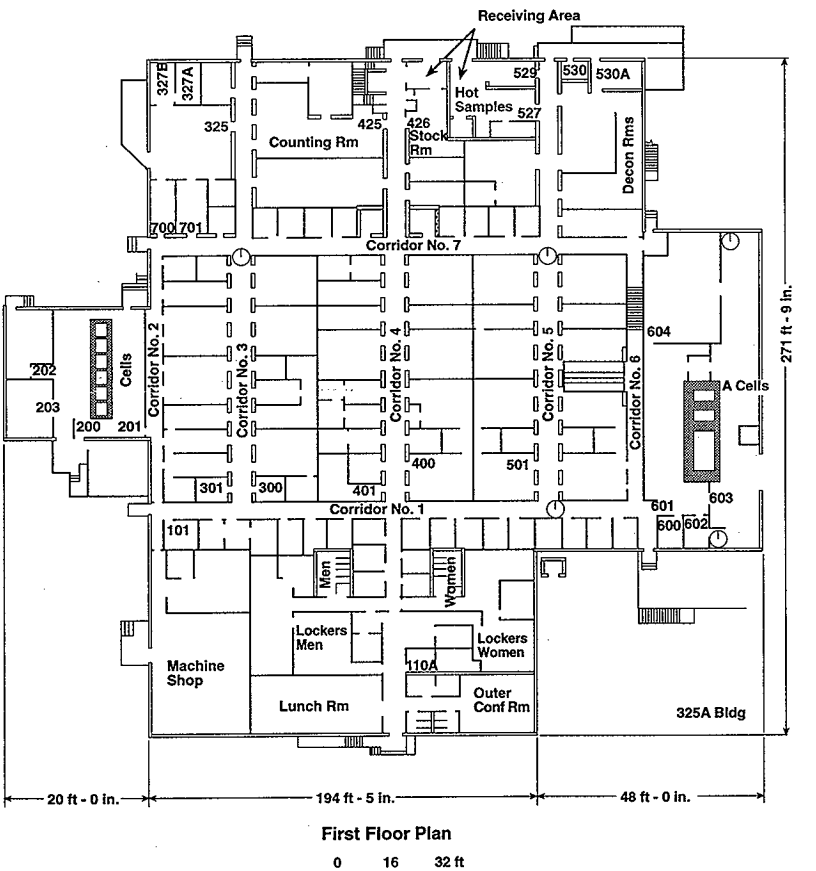

39502012.3

activities (Table 3-2). A substantial fraction of the caisson waste disposed at the 618-11 burial ground was generated in the 325-A hot cell operations. Most of the concrete-shielded waste drums disposed in the 618-11 trenches were also generated in the 325-A hot cells. About 10 percent of the 325 building remote-handled waste was generated in the analytical hot-cells, including both caisson and concreted drum waste.

Table 3-2: 325-A Hot Cells - Work Activities

A-Cell Special Projects	B-Cell General Purpose Lab Work	C-Cell Special Projects
1. Ion-Exchange Pilot Plant (1960-1962) Purified 1st 75,000 Ci ^{90}Sr for RTGs · 1st Macro-Scale ^{147}Pm Purification	1. B-Plant Flowsheet Development · Cs Precipitation · Cs Ion Exchange · Sr Recovery by Pb Sulfate Carrier Precipitation	1. Demonstration Molten Salt Electro-deposition of UO_2-PuO_2 (1960-1963)
2. Waste Solidification (1962-1964) · 1st Spray Calcination (200 gal) of PUREX 1WW · Demonstration of Phosphate Glass Melter	2. High-Level Waste Behavior During Thermal Concentration	2. Recovery of ^{237}Np and ^{238}Pu from Special Target Material (1964-1966)
3. Ion-Exchange Pilot Plant (1964-1977) · Recovered and Purified 14 Million Curies ^{147}Pm · Purified 1 kg ^{90}Sr · Purified 65 gm ^{244}Cm from Shippingport Waste · Purified 3 kg ^{241}Am	3. LWR Fuel Dissolution Tests for Waste Partitioning	3. Solvent Degradation Tests for LMFBR Processing (1966-1970)
4. Nuclear Waste Vitrification Project (1977-1980)	4. SrF_2 Capsule Development	4. Recovery of Medical-Grade ^{238}Pu From Special Targets (1972-1973)
	5. CsCl Capsule Development	5. Preparation of Capsules for SrF_2 Compatibility Testing (1973-1977)
		6. Nuclear Waste Vitrification Project (1977-1980)

NWVP equipment placed on standby by DOE Order in 1980. The limited available space has been used since that date for the following programs:

1. **MCC Leach Tests of Waste Glass**
2. **MCC Leach Tests of Spent Fuel**
3. **Post Irradiation Examination of N-Reactor Boron Thermal Shield**
4. **Characterization of NCRW**
5. **Tests on RHO Flowsheet for Converting NCRW to Non-TRU**
6. **Characterization of Tank Farm Double-Shell Slurry**
7. **N-Reactor Fuel Iodine Control Tests**
8. **N-Reactor Fuel Uranium Dissolution Tests**
9. **Recovery of Sr Using Antimonic Acid**

Appendix A contains detailed information of all 325-A hot cell wastes disposed between April 1961 and December 1967. The information was taken from PNL 325-A operations shift log books by an employee who worked in the 325-A hot cells during the entire period. A summary of Appendix A data is given in Table 3-3, delineating wastes that went to 618-10 or 618-11 burial grounds. Approximately 167 m^3 of waste was deposited in the 618-11 burial ground facility from the 325-A hot cells.

The radioactive solid wastes typically generated in the 325 building laboratories were discarded into polyethylene plastic-lined cardboard cartons (see Appendix C). The typical size of the cartons were 18 inches by 18 inches by 24 inches with a computed volume of 4.5 $feet^3$. Cardboard cartons of other sizes were sometimes used for spent CWS filters and similar wastes. This type of package represents some of the more common pre-1970 TRU waste.

During this time, radioactive wastes such as TRU, byproduct, or fission-product material were not segregated. However, plutonium and byproduct materials were classified as special nuclear material (SNM), and therefore were accountable. Plutonium, U^{235}, and U^{233} are fissile materials and are accountable to the nearest gram. Byproduct material included natural uranium, depleted uranium, and thorium. These materials were accountable to the nearest pound. Waste cartons and other waste containers having appreciable gram quantities of plutonium, and fissile materials were to be labeled with the value of fissile material being disposed. Fissile values were also to be written off respective SNM inventory records. Likewise, waste packages containing pound quantities of byproduct material were to be labeled with SNM content. SNM inventories of byproduct materials were to be adjusted appropriately. Burial records were expected to contain this information, but lack of this type of information indicates that many SNM contents were not reported or not recorded. SNM inventory writeoff values were estimates at best, and probably were more closely related to SNM accountability than to actual waste contents. Safeguard accountability records for the 300 Area would have provided a good estimate of the amount of plutonium disposed in the waste, but the records have been destroyed.

The cartons and other waste packages were taken to the back of the building and loaded in a labeled load lugger (Figure 2-27). These were routinely emptied once a week and sometimes more often if there was a scheduled cleanup. It was sometimes difficult to make efficient use of the lugger space. However, disposal of spent CWS filters in cartons of varying size helped in packing the load lugger. Spent CWS filter cartons were approximately 12 inches by 24 inches by 24 inches and occupied about 4.0 $feet^3$.

Table 3-3 - 325A Hot Cells Disposal Record, 1961-1967

YEAR	CULVERT 55-GAL DRUM	1" LEAD 55-GAL DRUM	2" LEAD 55-GAL DRUM	1-GAL PAINT CAN	5-GAL PAINT CAN	15-GAL BLACK IRON	15-GAL RESIN SST CAN	C.W.S. FILTER	4' X 4' X 8' WOOD BOX	8" X 20" X 28" WOOD BOX	WOOD BOX	55-GAL DRUM	WASTE CARTONS	MISCELLANEOUS	
1961 A	[2]	[3]	[1]	[2]									[7]		
B	[6]	[8]	[5]					[9]	[1]			[2]			
1962 A	[7] (3)	[5]			(3)	[1]		[1] (1)	(1)	(25) - LEAD BRICKS	(6) - GLASS PIPES 4" OD X 9 ft			(Box 30" x 30" x 35") (30 gal drums - 2 each) (20 gal steel tanks - 4 each)	
B	[6]	[5] (1)			[3]			[9] (14)	[2]			[3]	[4]		
1963 A	[15]	[11]	[4]					[11]	[3]					[Box 3' x 3' x 6'] [3" lead drum]	
B	[2] (6)	[3] (4)	[1] (2)					[1] (16)							
1964 A				(98)	(2)	(22)		(35)							
B				(32)	(36)	(2)		(37)					(4)		
1965 A				(5)	(12)	(42)		(29)	(17)					(2 Boxes - 2' x 3' x 4')	
B					(10)	(50)		(8)	(8)						
1966 A					(19)	(10)	(2)	(6)	(1)						
B					(24)	(2)	(8)	--						(14) - 40 gal tanks	
1967 A					(58)	(4)	(9)	(17)				(1)	(5)	(2) Wood boxes - glass pipe 16" OD x 9 ft 8" OD x 9 ft	
B					(84)		(19)	(12)	(5)						
TOTAL	[38] (9)	[35] (5)	[11] (2)	[2] (135)	[3] (248)	[1] (132)	(38)	[31] (175)	[6] (32)	(25)	(6)	[5] (1)	[11] (9)	[2] (15)	Totals
Volume (ft^3)	[285] (67.5)	[262.5] (37.5)	[82.5] (15.0)	[0.3] (18.4)	[2.0] (168.6)	[2.0] (269.3)	(77.5)	[124] (700)	[768] (4096)	(64.8)	(4.7)	[37.5] (7.5)	[49.5] (40.5)	[61.5] (126)	
Volume (m^3)	[8.07] (1.91)	[7.43] (1.06)	[2.33] (0.42)	[0.01] (0.52)	[0.057] (4.77)	[0.057] (7.62)	(2.19)	[3.51] (19.81)	[21.73] (115.92)	(1.83)	(0.13)	[1.06] (0.21)	[1.40] (1.15)	[1.74] (3.57)	[47.39] (161.11)

A = First half of year
B = Second half of year
Brackets [ ] refer to 618-10 Burial ground
Parentheses ( ) refer to 618-11 Burial ground

Radioactive laboratory liquid wastes were routinely discharged to the contaminated sewer system now known as the radioactive liquid waste system (RLWS) and went to the 340 building. Any significant discharge of plutonium material to the liquid waste steam was prohibited unless approved ahead of time. Criticality limitations restricted the waste in the RLWS system to less than 15 g fissile per tanker truck (8,000 gallons maximum) or rail tanker load (20,000 gallons maximum).

The liquid waste was collected in holding tanks located in the 340 building where it was neutralized and the pH adjusted to basic levels in a large mixing tank. The neutralized waste was then loaded into tanker trucks (later rail tankers) for shipment to the 200 Area for concentration by evaporative processing. The liquid concentrate was stored in underground tanks now known as single-shell tanks. Buildings that were serviced by the RLWS system included 327, 326, 325 (including both hot cell areas), 324, 309, and 308, and the decontamination area of 340 (Lust 1976). Potential (but normally non-radioactive) liquid waste was discharged to the retention waste system (BNWL 1967). The retention waste was monitored for radioactivity and if non-radioactive, was discharged to the process sewer system. If the retention waste was found to be radioactive, it was retained and processed in the RLWS system. No appreciable plutonium-contaminated waste would have been discharged in this manner.

The other solid and liquid radioactive waste generated in the building comprised moderate and high-activity wastes. This specialized waste was generated primarily from the hot cell areas, either the 325-A hot cell or the 325-B hot cells. Initially, the typical hot cell waste was cut up and placed in one gallon cans, which were placed in a concrete and/or concrete/lead shielded drum. Wastes in these shielded 55-gallon drums were disposed of to the 618-10 or 618-11 trenches. Later, casks were designed that held larger waste containers; five gallon cans for high-activity wastes and 15-gallon cans for lower activity waste and spent equipment. Beginning January 1964, the one gallon cans were disposed using the new one ton cask. The use of the cask made it possible to use fewer shielded drums. However, concrete-shielded drums continued to be used for some cell waste through the 1960s and 1970s. March 1964 began the shipment of five and 15-gallon containers to the burial grounds using the new seven-ton cask (Figures 2-9 and 2-21). The wastes were loaded out the side of the cells into the horizontally positioned cask, and shipped vertically on a flatbed truck trailer to the 618-11 burial ground. One 15-gallon drum disposed of spent resin while the other disposed of larger equipment and hardware.

The concrete drums were also used to dispose of small volume liquid wastes that were either highly radioactive, had a high plutonium content (>15 g), or contained contaminated oil or organics. Sealed liquid bottles were placed in the center of a concrete drum, and concrete was poured on top to seal them (Lust 1976). The concrete was mixed in Room 530, and the drums filled in an open hot cell facility with a portable commercial cement mixer. Weights, volumes, and quantities of waste generated at the 325 building are discussed in Section 3.2. Some

325-A hot cell wastes. Much of the equipment is stainless steel with tubing, glass, tanks, wiring, insulation, valves, pumps, and motors. The rest is miscellaneous pressure, vacuum, flow, and temperature support equipment. Much of the waste is contaminated and may harbor significant SNM material. Hundreds of thousands of curies of various radionuclides have been disposed of, but with several half-lives completed, the activity is down to only thousands of curies.

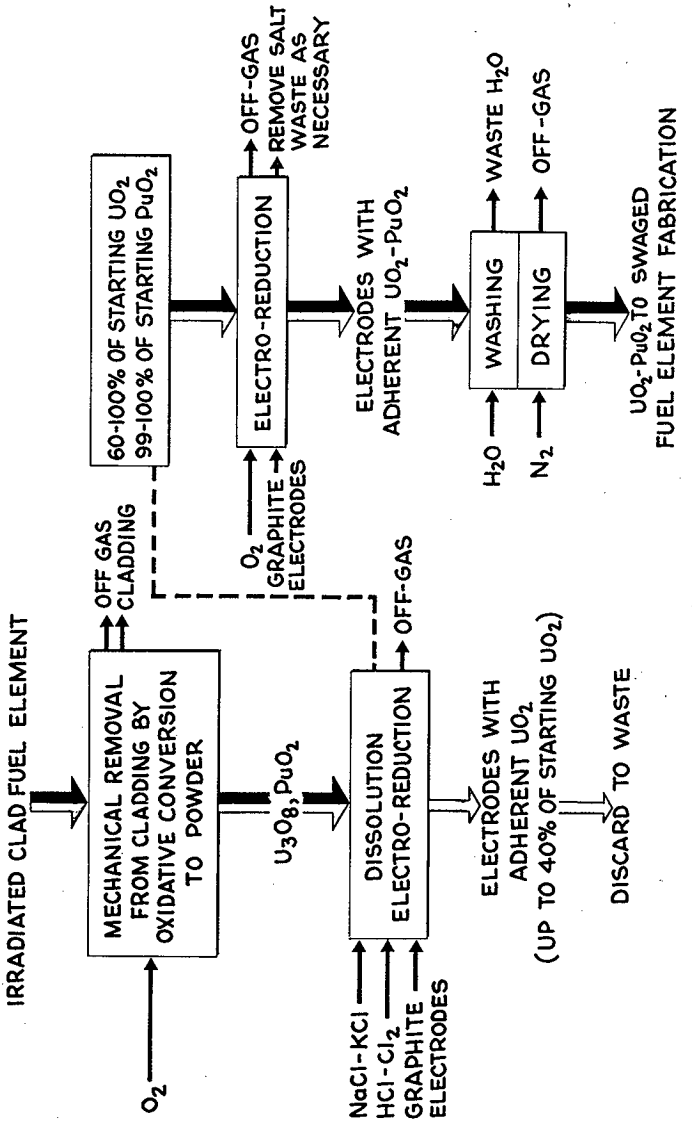

Figure 3-11: Salt Cycle Process

Figure 3-12: Approximate Composition of PUREX 1WW

APPROXIMATE COMPOSITION OF PUREX 1WW

CONSTITUENT	CONCENTRATION, MOLES/LITER
H^+	4.0
Na^+	0.6
Fe^{+3}	0.5
Al^{+3}	0.05
Cr^{+3}	0.04
Ni^{+2}	0.02
UO_2^{+2}	0.005
NO_3^-	4.5
$SO_4^=$	1.0
$Po_4^=$	0.005
TOTAL FISSION PRODUCTS	0.04
SOLIDS*	10 VOLUME PERCENT
RADIATION LEVEL	10^6 r/hr/l at ONE FOOT

*Silicic Acid, Silicates, Phosphates, Sulfates, & Noble metal

Figure 3-13: PUREX Plant Strontium Discovery Flowsheet

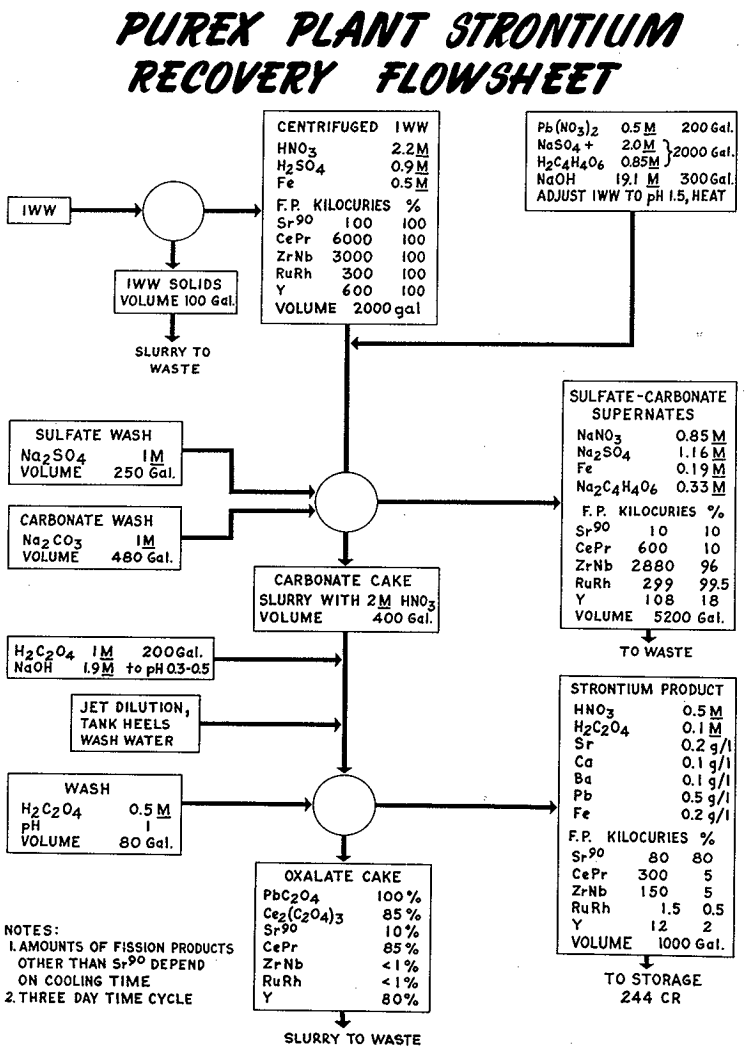

Figure 3-14: "A" Cell Spray Calciner Mock Up

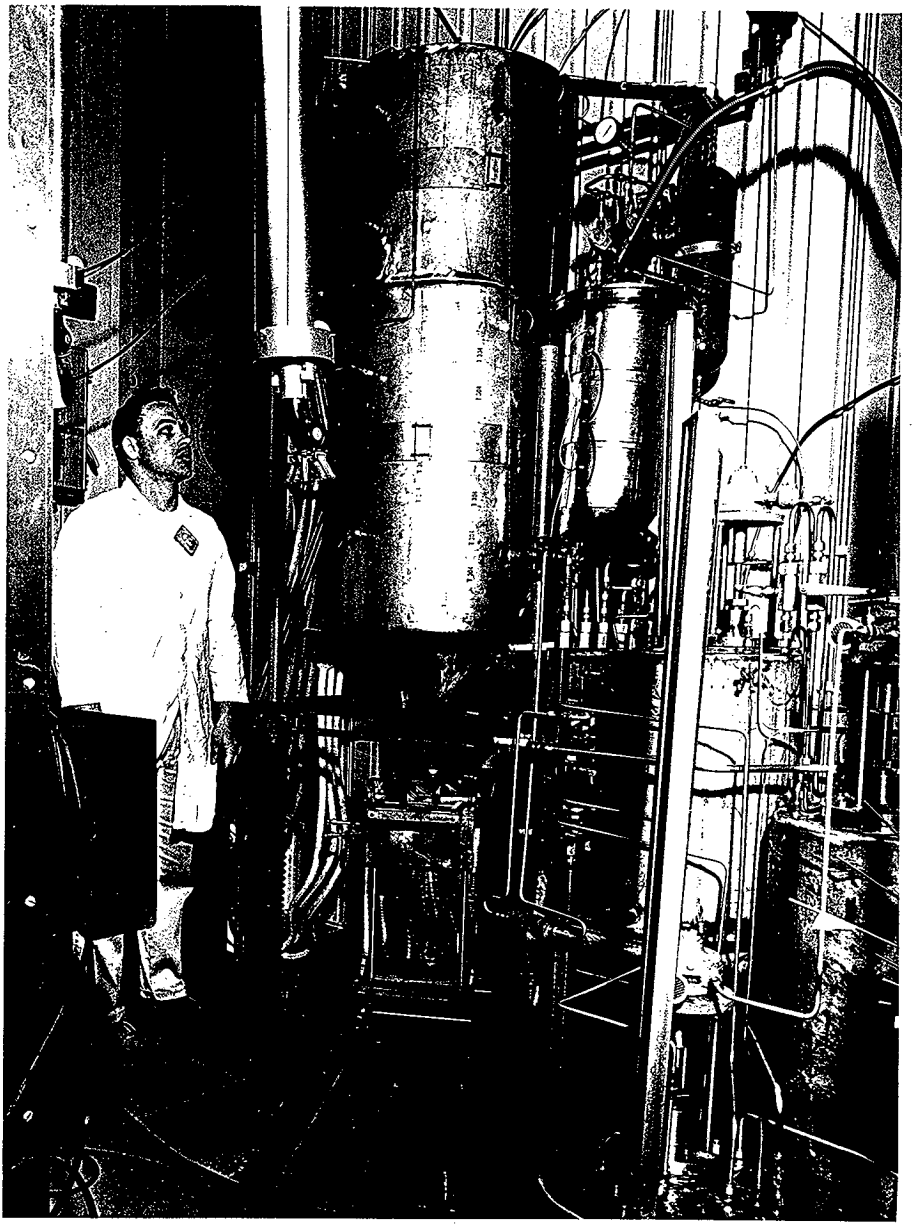

Figure 3-15: **Spray Calciner in "A" Cell (1962-1964)**
Equipment Buried in 1965

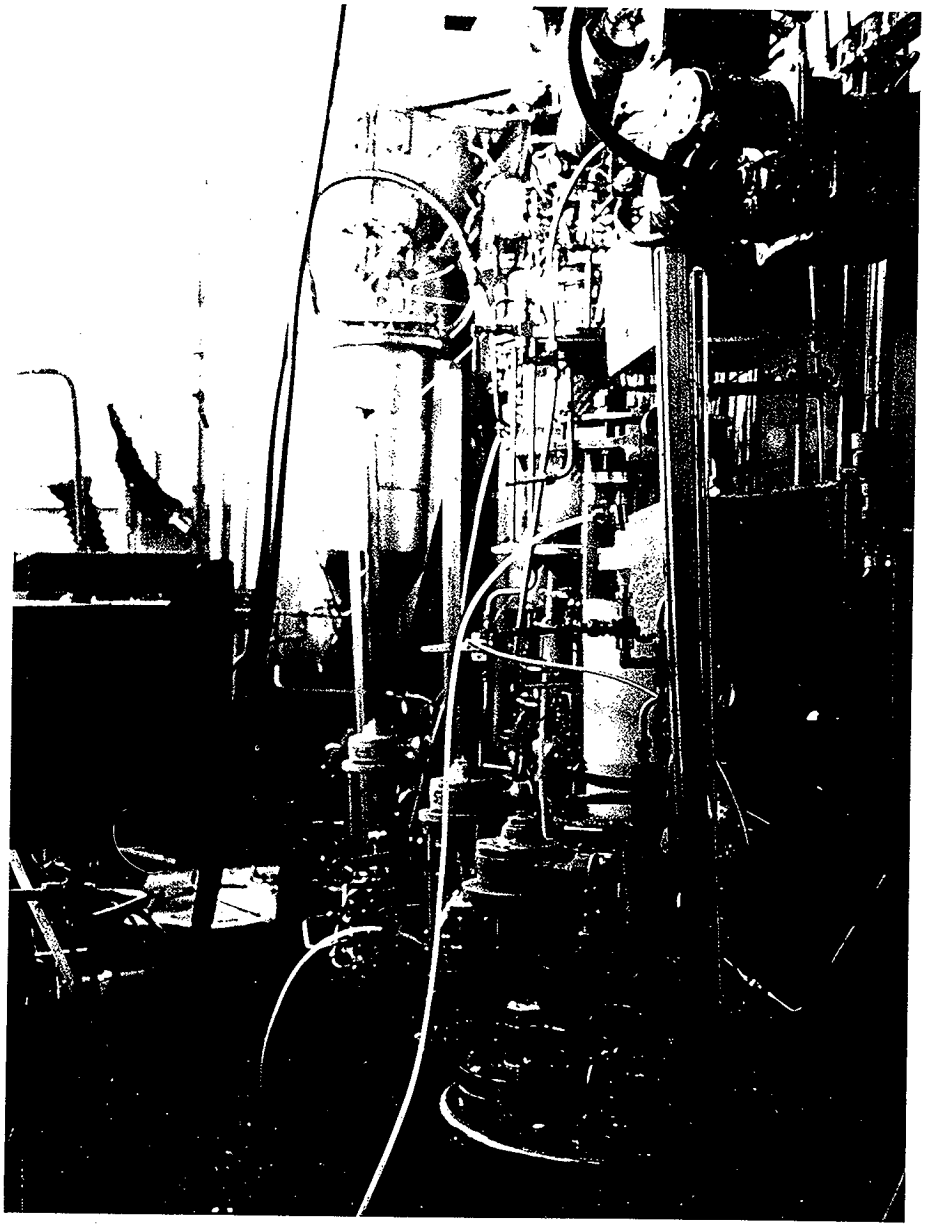

Figure 3-16: Spray Calciner "A" Cell Cut Up Buried in 15-Gallon Cans in 1965

Figure 3-17: 325-A "A" Cell ^{147}Pm Ion Exchange (1960-1962)
Equipment Sent to Burial in 1963

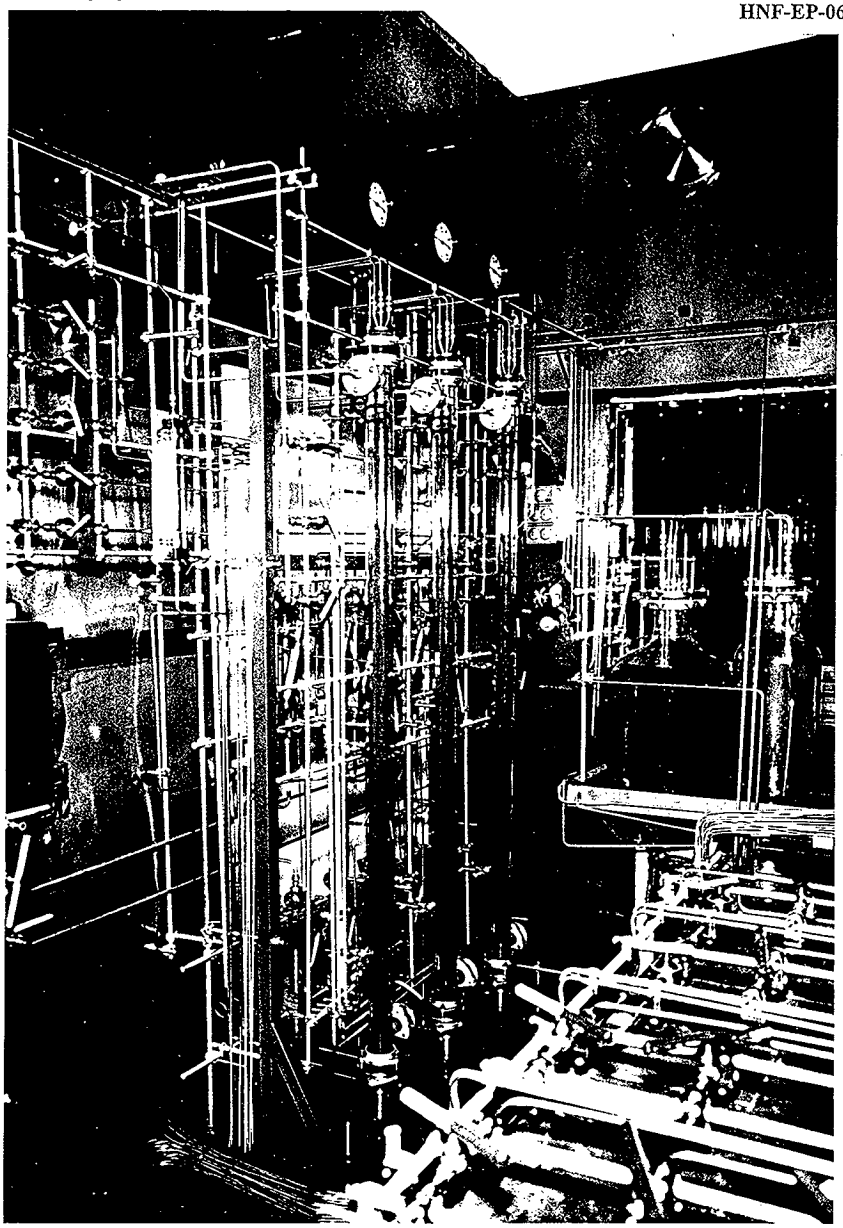

Figure 3-18: "A" Cell Spray Scrubber Removal Equipment Buried in 1965

Figure 3-19: "A" Cell ^{147}Pm Ion Exchange Pilot Plant (1960-1962)
Equipment Sent to Burial 1963

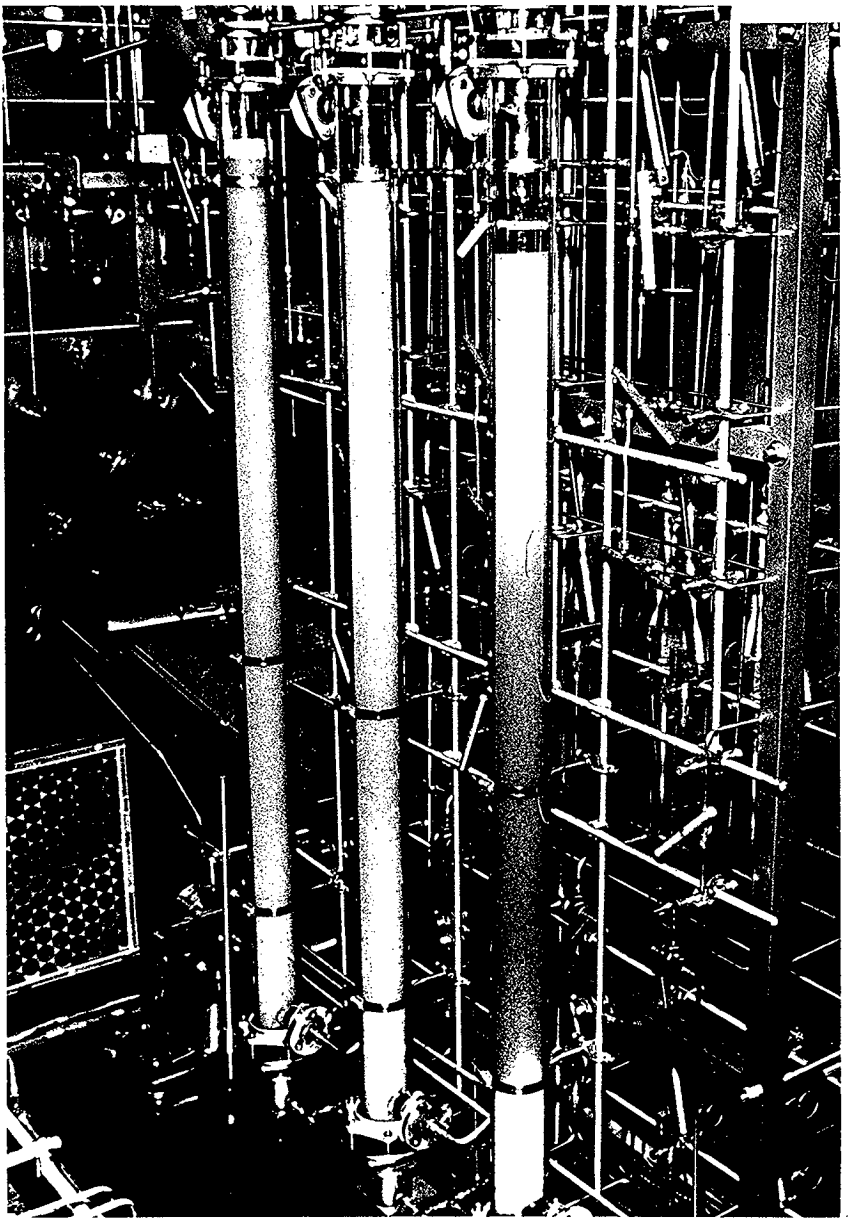

Figure 3-20: **325-A "B" Cell**
Equipment Removed to Burial in 1965

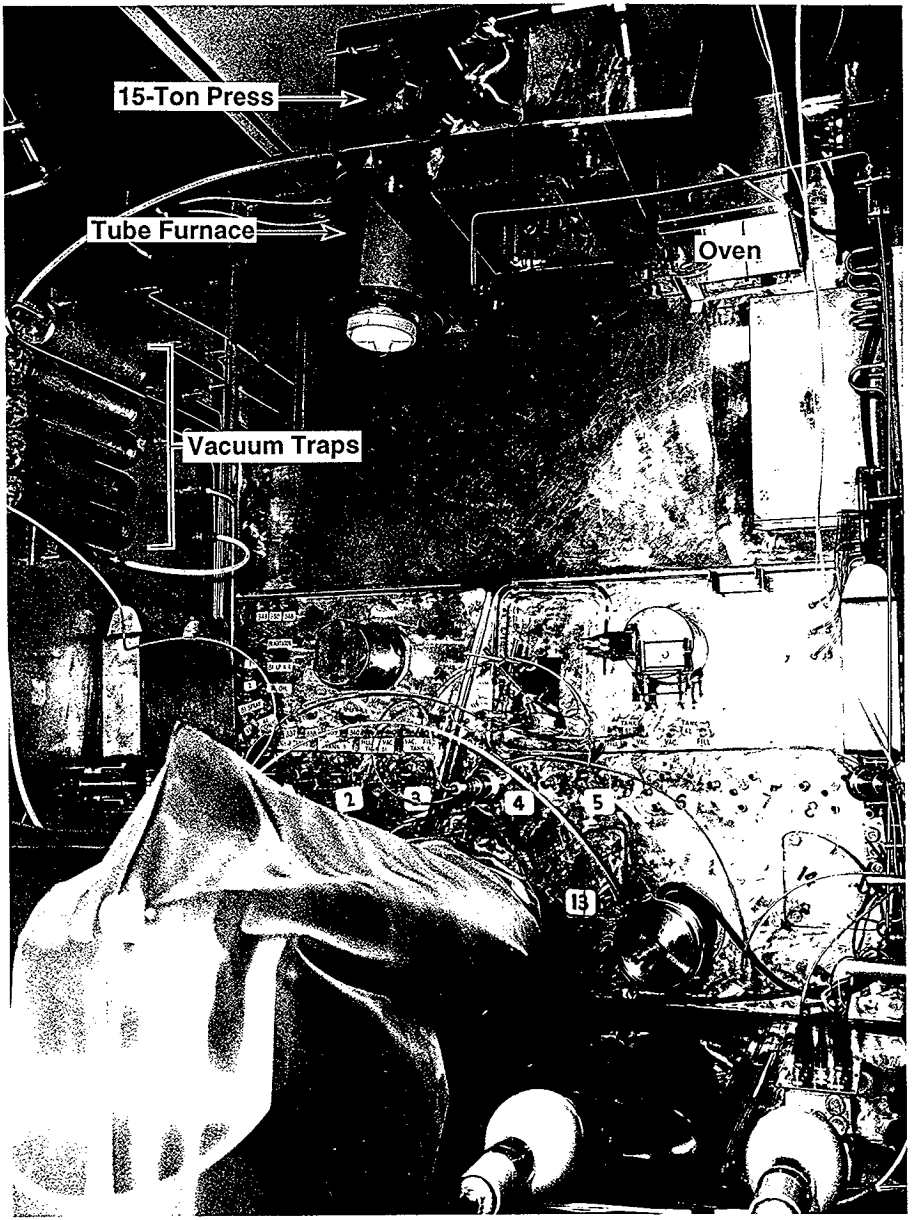

Figure 3-21: "C" Cell ^{147}Pm Purification Equipment Sent to Burial 1963

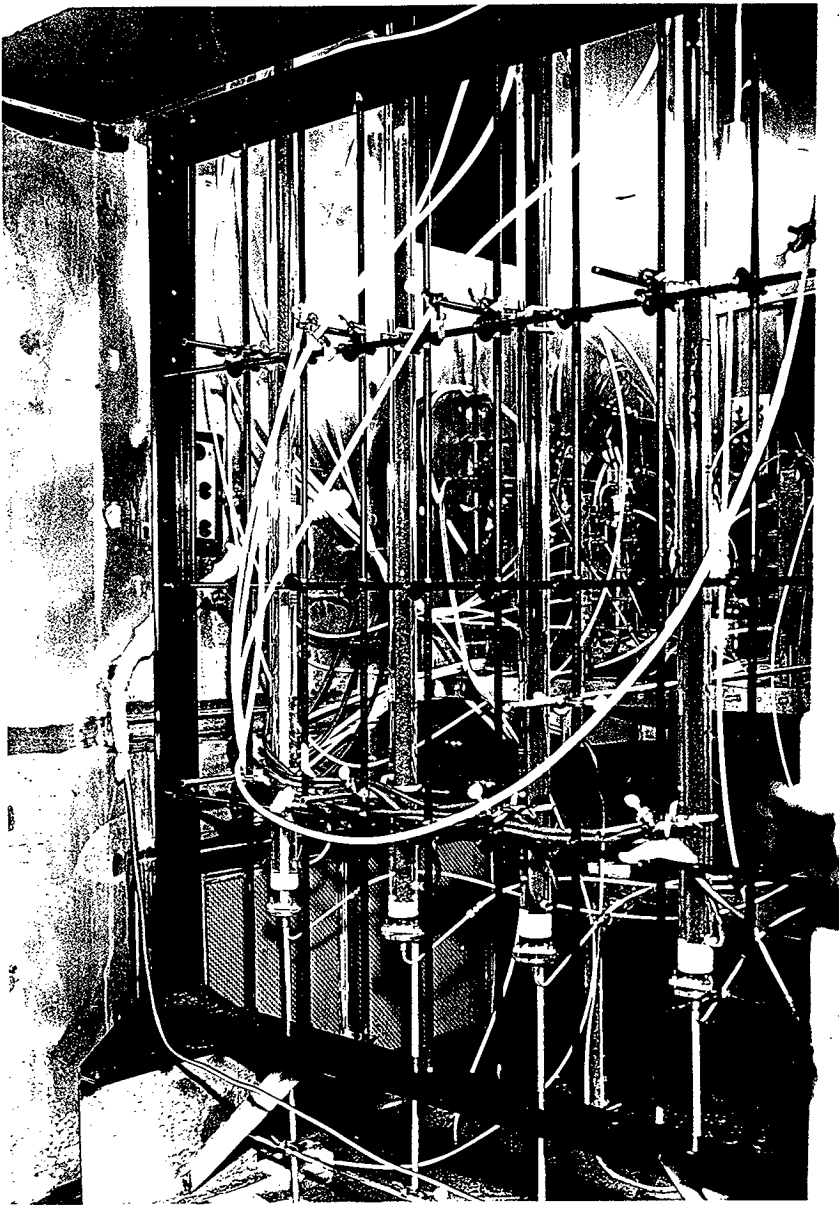

Figure 3-22: 325-A "C" Cell Salt Cycle Process (1960-1963)
Equipment Sent to Burial in 1964

Figure 3-23: **"C" Cell Salt Cycle Process Graphite Electrode Sent to Burial in 1964**

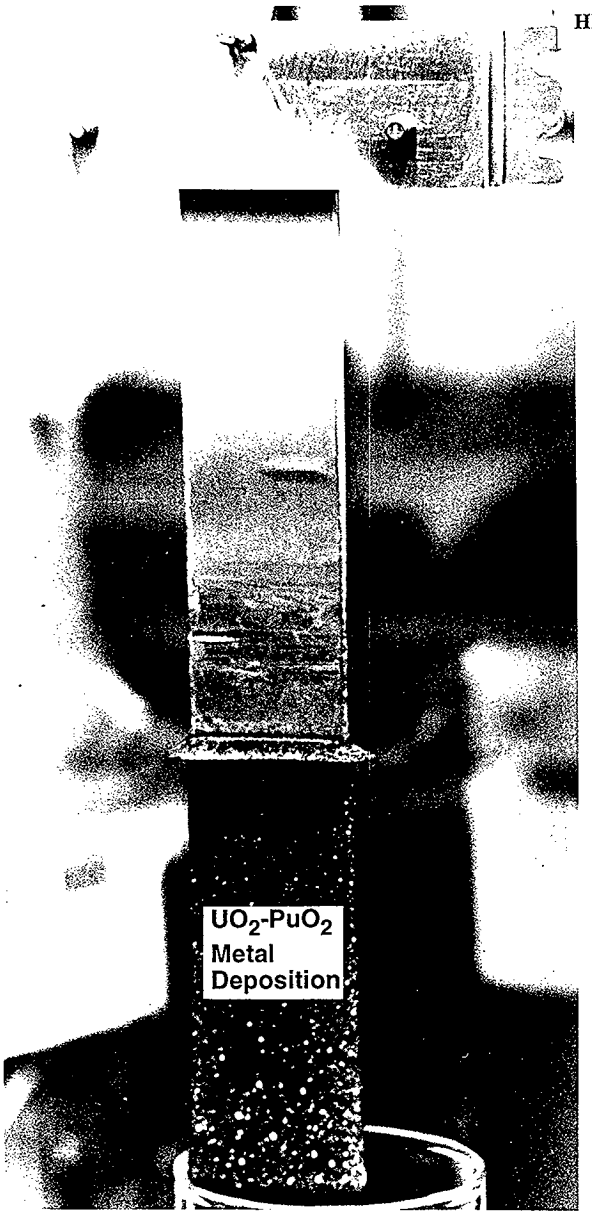

Assuming a 2 percent radionuclide content loss in the waste, the following will have transpired:

- 75,000 Ci of Sr^{90} in A-cell (1960-62) produced 1,500 Ci to waste that has decayed to 750 Ci today.
- 14,000,000 Ci of Pm^{147} purified in A-cell (1964-1977) produced 280,000 Ci of waste that has decayed to 100 Ci today.
- 1 kg of Sr^{90} (131,000 Ci) purified in A-cell (1964-70) produced 2,600 Ci of waste that has decayed to 1,300 Ci today.
- 60 g of Am^{241} waste generated in A-cell

Other R&D projects conducted in the 325-A hot cells produced, through purification or separation, the following radionuclide volumes:

- Np^{237} recovery in C-cell (1964-1966) - 4.3 kg plus 1 to 2 kg special dissolver test Np material.
- Pu^{238} recovery in C-cell (1964-1966) - 0.3 to 0.5 kg Pu^{238}.
- PuO_2 production in C-cell (1960-1966) - 13.75 kg UO_2, 2% PuO_2

The above three volumes are production, not waste, values. However, substantial quantities of radioactive materials, including TRU and alpha materials, were processed in the cells and added significantly to the waste volumes generated. One waste of particular concern is the 185 spent CWS filters that went into the 618-11 trenches. Multi-gram quantities of short-lived beta/gamma radionuclides, as well as long-lived TRU radionuclides, were entrapped in the CWS filters.

3.1.3 History of the 327 Building From 1962 to 1968

The 327 building is located in the middle of the 300 Area (Figure 3-24). The facility was completed and occupied in 1953. The 327 building is shown as it appears today in Figure 3-25. It was constructed to replace the temporary 111-B metallurgy building and was designated the Radiometallurgical Building. Later, the name was changed to the Postirradiation Testing (PIT) Laboratory. Since operations started in 1953, two additions and two major modifications have occurred. The floor plan, after the addition of F, G, H, and I cells, is shown in Figure 3-26. The 327 building played an important role in the metallurgical and fuel research programs conducted on the Hanford Site (Briggs 1982, Gerber 1992).

Figure 3-24: Aerial View of 327 Building

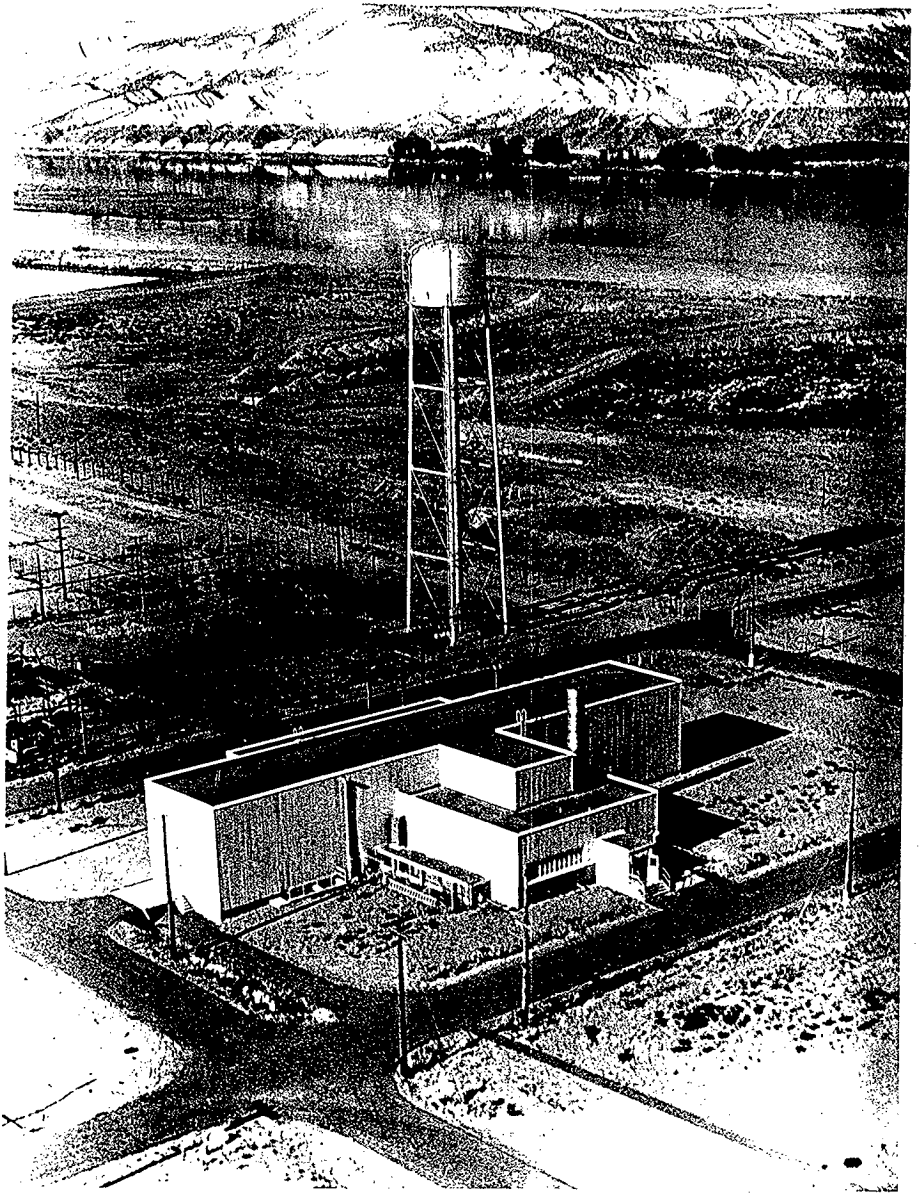

Figure 3-2. Building 327

Figure 3-26: 327 Radiometallurgy Building Floor Plan

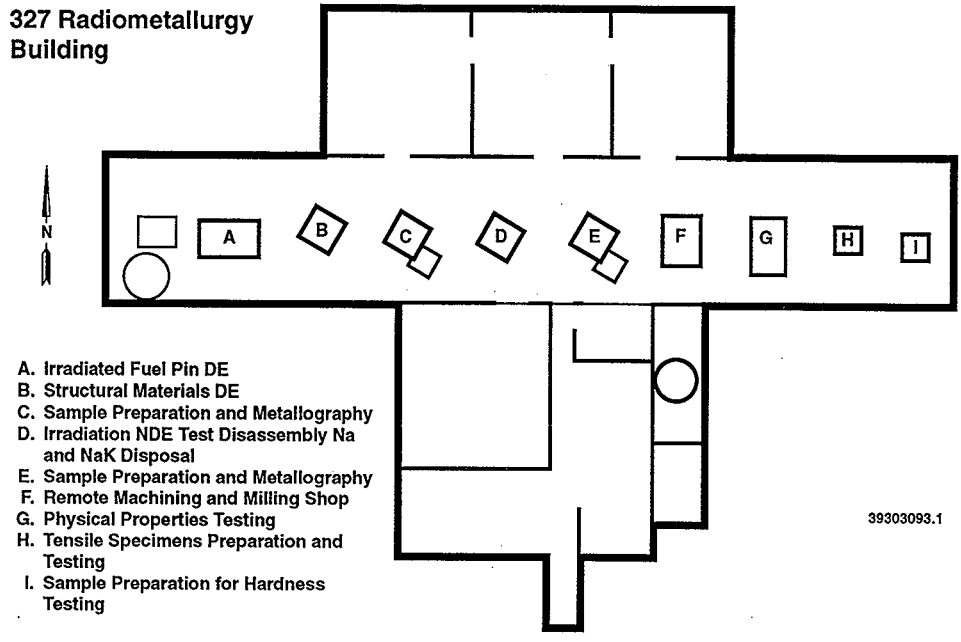

After the addition of the four cells, the facility included 10 shielded hot cells, a water-filled fuel basin, and dry sample storage facilities. Figure 3-27 shows the main canyon floor of the building looking east. The circular ports on the cells were designed to be removed to load out waste into one of several loading casks (Figure 3-28). Aluminum milk cans or buckets were used in the early 1960s as moderate and high-activity waste disposal containers. Casks, such as the one shown in Figure 3-28, replaced the milk pail and gatling-gun casks in the later 1960s. These casks could be loaded with several one gallon cans. Figure 3-29 shows the relative sizes, shapes, and characteristics of the different casks used to ship wastes from the 327 building.

The 327 building offered a wide range of capabilities including irradiated fuel pin destructive and non-destructive analyses, metallographic examinations, irradiation test assembly fabrication, and structural material testings (HEDL 1983). The laboratory is 215 feet long by 140 feet wide by 32 feet high. The main operating canyon had 10 alpha qualified steel shielded cells. A directory of the cells and the operations conducted in each cell is given in Table 3-4. Adjacent auxiliary areas include a photography laboratory, machine shop, manipulator repair area, a semi-radioactive metallography facility, and the storage and loading area for casks using bridge cranes (Figure 3-30). A typical isometric view of a 327 hot cell unit is given in Figure 3-31. The basement area contained storage space and stored equipment, hot cell exhaust systems, RLWS lines, air conditioning, utility, and power services.

The 327 building was used to perform physical and metallurgical examinations of irradiated nuclear materials. These included nuclear fuels such as natural or enriched uranium in the metal or the oxide (dioxide) form, plutonium in the metal alloy or oxide form mixed with uranium, and thorium oxide (dioxide) mixed with the oxides of uranium or plutonium. Fuel cladding materials including aluminum, stainless steel, and zirconium alloys were examined as were reactor structural materials, including graphite, aluminum, stainless or mild steel, and zirconium alloys. Examination specimens could range from 3/8 inch diameter spheres to fuel element assemblies which were eight feet long and more than three inches in diameter. The 327 building activities conducted during the 1950s and 1960s are summarized in Table 3-5.

Hot cell operations in the 327 building differed from those in 325-A. The materials testing campaigns involved examination of different fuels and materials not stripping hot cells of equipment and refurbishing with new equipment as was done in 325-A hot cells. Failed equipment was removed and new equipment was installed infrequently. The 327 wastes were metal and fuel grindings; fuel pieces; specimen-cleaning solutions on wipes; small laboratory equipment; hardware used in the metallographic preparations; and residues from sampling, storing, mounting, and examination of specimens. A survey of four different one-gallon cans of 327 waste from typical fuel sampling and testing operations produced the results listed in Table 3-6. The survey was carried out in the 1980s. 327 building operations had not changed much from the 1960s and this waste is expected to be characteristic of the 327 hot cell wastes that went to the 618-11 burial ground (Greenhalgh 1986).

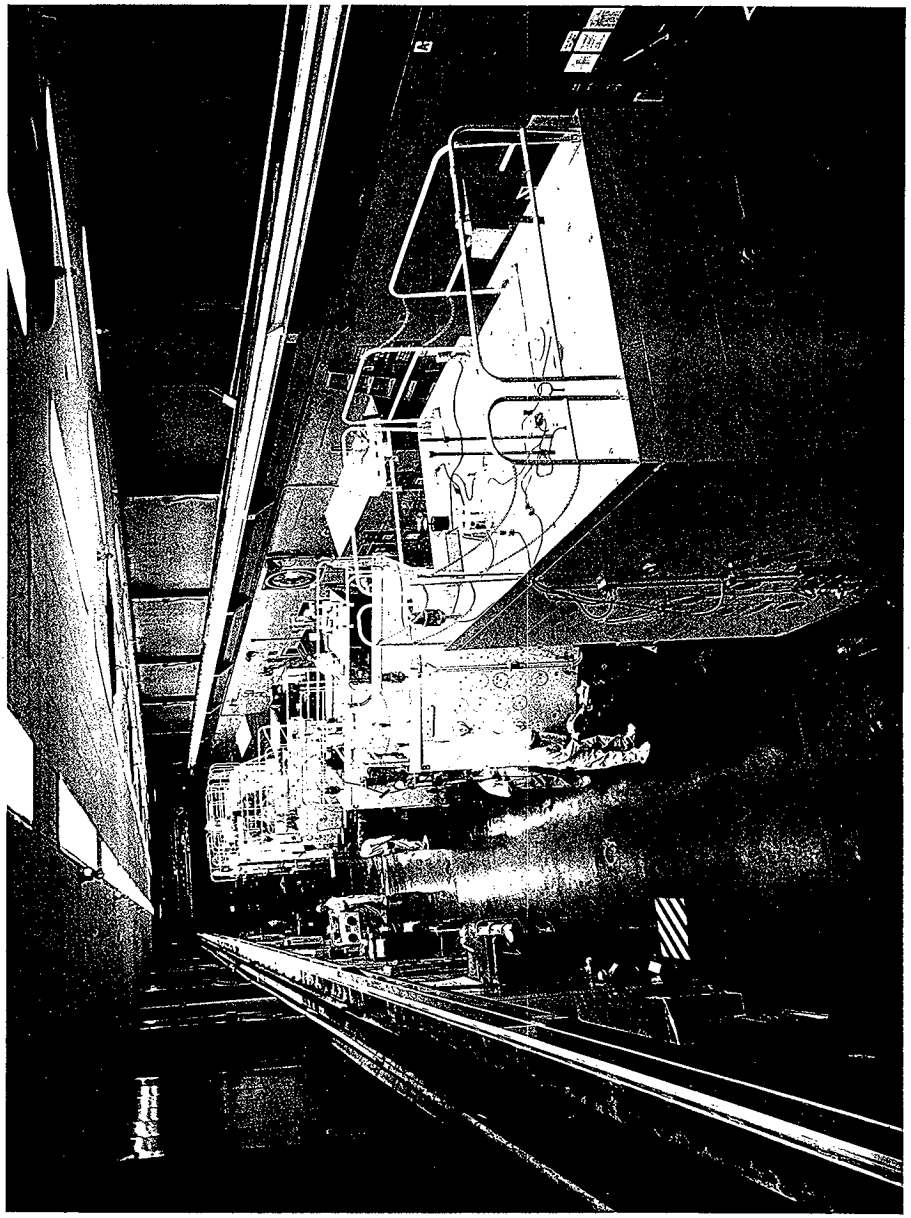

Figure 3-27: H ells in 327

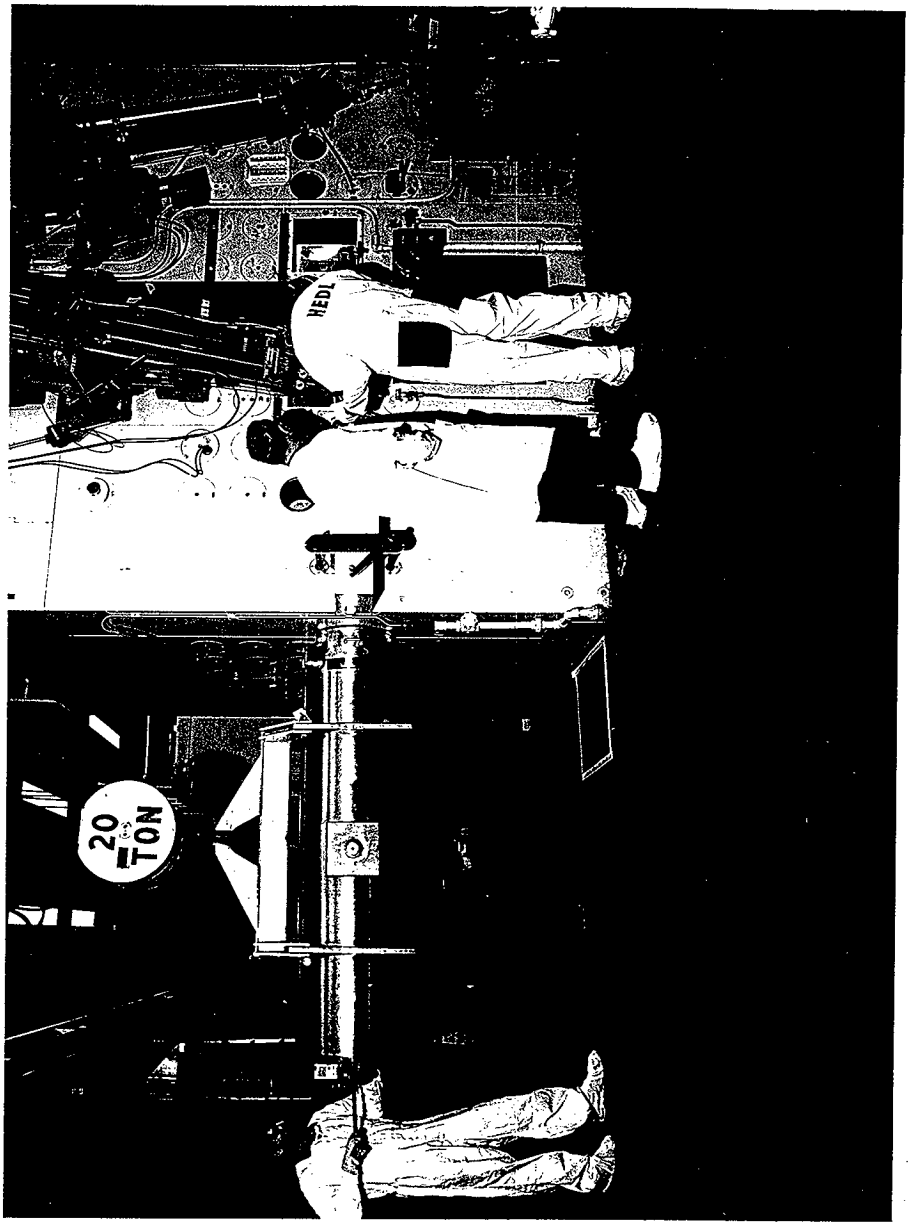

Figure 3-28: 327 Hot Cell Load out

Figure 3-29: 327 Building Cask Collection

CASK COLLECTION

Table 3-4: Directory of 327 Building Cells (Autumn 1962)

	Title	Shielding	Operation
A Cell	Examination	18" Cast Iron (Meehanite)	Initial examination and photography. Length, diameter and wrap measurements. Sample cutting.
B Cell	Chemistry	15" Cast Iron	Sample dissolution for burn-up analysis. Chemical decladding. Fission product gas collection and measurement. Auxiliary sample cutting.
C Cell	Metallography	10-1/2" Cast Iron	Sample grinding, polishing and etching. Metallography. Replication for electro microscopy.
D Cell	Materials Testing	10-1/2" Cast Iron	Micro hardness testing. Micro sampling. Pulse annealing. Scintillation scanning.
E Cell	Utility Cell	10-1/2" Cast Iron	Hardness testing. Annealing. Equipment mockup.
F Cell	High Level Utility	18" Cast Iron	Sample forming, mechanical decladding, and capsule opening.
G Cell	Physical & Mechanical Testing	10-1/2" Cast Iron	Tensile, fatigue, and impact testing. Dilatometry and electrical resistivity. Annealing.
H Cell	High Temperature Tensile Testing	10-1/2" Cast Iron	Tensile testing at room and high temperatures (1000°C). Micro-photography.
I Cell	Tensile Testing	10-1/2" Cast Iron	Tensile and compression testing at room temperature.
	Density Cell	8" Lead	Density determination.
	X-Ray Cell	6" Lead	X-Ray diffraction studies.

Figure 3-30:

Post-Irradiation Testing Laboratory

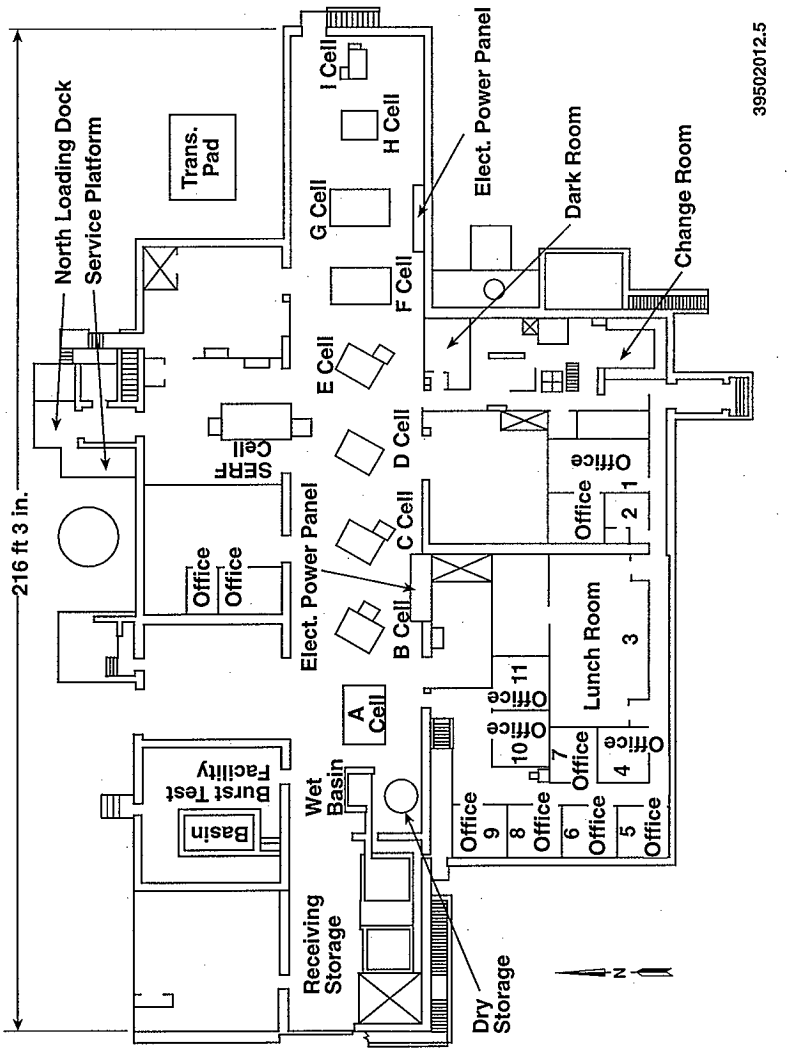

Figure 3-31: Typical Isometric View of 327 Hot Cell

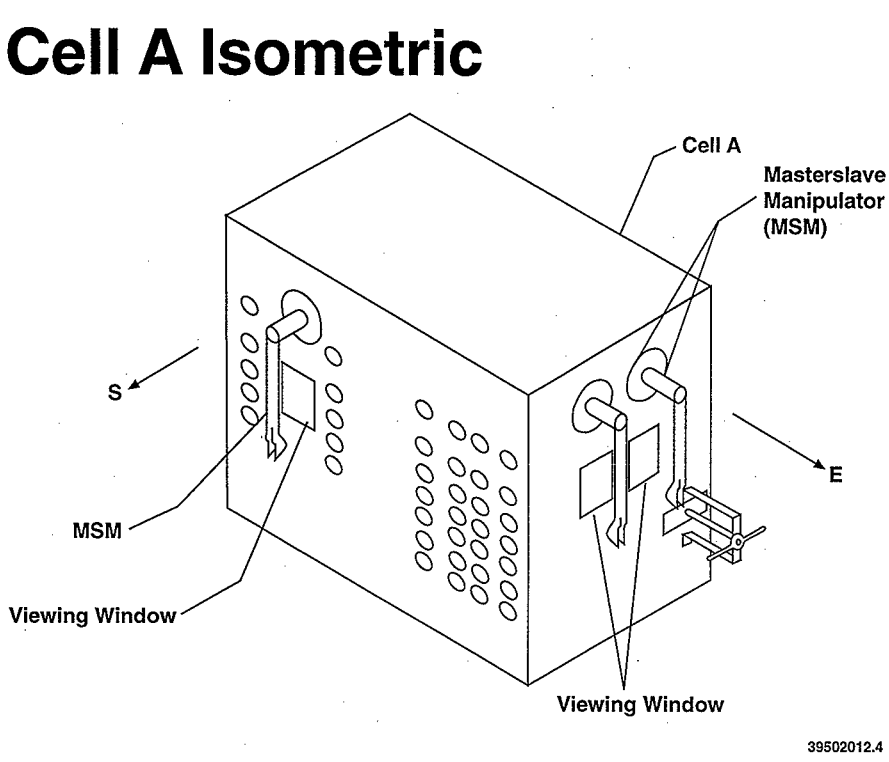

Table 3-5: 327 Building History

1953-1970	Provide surveillance and rupture/failure analysis for fuel elements and materials for the Hanford Production Reactors.
1958	Evolution from aluminum to zirconium clad metal fuels, zirconium ll environment with NaK, Ni plating of cladding, etc.
1958-1968	Provide surveillance and rupture/failure analysis for fuel elements and materials for the Plutonium Recycle Test Reactor.
1959-1965	Examination PuO_2-UO_2 fuels and the introduction of higher enrichment fuels, use of stainless steel cladding, etc..
1960	Facility was expanded to eleven Hot cells to provide additional examination capabilities.
1960-1988	Provide surveillance and rupture/failure analysis for fuel elements and materials for N-Reactor. Pressure tube safety enhancement project.
1961	Plutonium impregnated graphite, GEH series prototypic fuel pins, etc..
1962	PRTR pressure tube burst testing, examination of prototypic fuel materials, e.g., magnesium oxide and PuO_2, etc..
1963	Waste tanks sludge examination, SNC cermet fuel examination, etc.
1964	Aluminum/aluminum lithium examination, waste glass concentrate examination, British fuel and material examination, etc..
1965	First series of ruptured N-Reactor fuel element examinations, thorium oxide examinations, etc..
1965-1972	Examination of fuels and materials for NASA.
1967	Heat source examinations, e.g., cesium chloride, promethium oxide, strontium.

Table 3-6: The Representative Contents of Simulated 327 Remote Handled Transuranic Waste

	Quantity	Contents and Description
Can No. 1	25	180 grit grinding discs
	10	240 grit grinding discs
	10	400 grit grinding discs
	5	600 grit grinding discs
	5	Pellon polishing discs
	5	Micro-cloth polishing discs
	60	Aluminum brads
	5	Cotton sample swabs
	5	Nylon sample grinding caps
	2	#8-1/2 rubber stoppers
	5	#1-1/4 plasic pipe caps
	2	13 Dram plastic vials and caps
	2	Kotex napkins
Can No. 2	1	Mod. "G" manipulator boot
	1	4" ice cream carton
	4	#1-3/8 rubber tube caps
	12	1/2" rubber tube caps
	5	#1/2 x 3 snap cap vials
	5	Nylon sample grinding caps
	2	Kotex napkins
	2	WypAll paper towels
Can No. 3	9	#1-1/4 plastic pipe caps
	7	1-1/3 x 2-1/8 plastic vials and caps
	5	½ x 1 tapered corks
	10	Nylon sample grinding caps
	1	#5-1/2 rubber stopper
	4	7/8 x 2 plastic vials and caps
	14	#1/4 rubber tube caps
	14	#1/4 threaded steel pipe plugs
	1	2 x 4 glass dish
	1	Ink Marker
	1	1" nylon paint brush
	1	#105 rigid tubing cutter
	1	#10-099 Stanley utility knife
	2	Kotex napkins
	2	WypAll paper towels
	1	12 x 14 plastic bag
Can No. 4	2	Kotex napkins
	1	2¾ x 3 aluminum weight (round)
	1	1½ 1-1/8 x 3 aluminum block
	1	7/8 x 1 x 2½ SS block
	1	¼ x 1 x 1 x 7 aluminum angle metal
	1	Krylon spray paoint can (punctured)
	1	24 x 24 cloth rag
	1	2 x 4 plastic bottle
	1	½ x 2 x 3 aluminum block
	2	rubber canner's gloves
	2	WypAll paper towels

Figure 3-32 is a typical fuel sample flow chart for the 327 building main floor. A test fuel element entering the 327 building generally arrived in a large, lead-filled stainless steel cask and was loaded either into a water-filled storage basin or directly into one of the cells. Examination steps that may then be performed include photography; length, diameter, and warp measurement; and metallography. In this operation, metal samples are cut with a silicon carbide saw and ground, polished, etched, and photographed at high magnifications.

Figure 3-32: Radiometallurgy Flow-Chart

Radio - Metallurgy Flow Chart

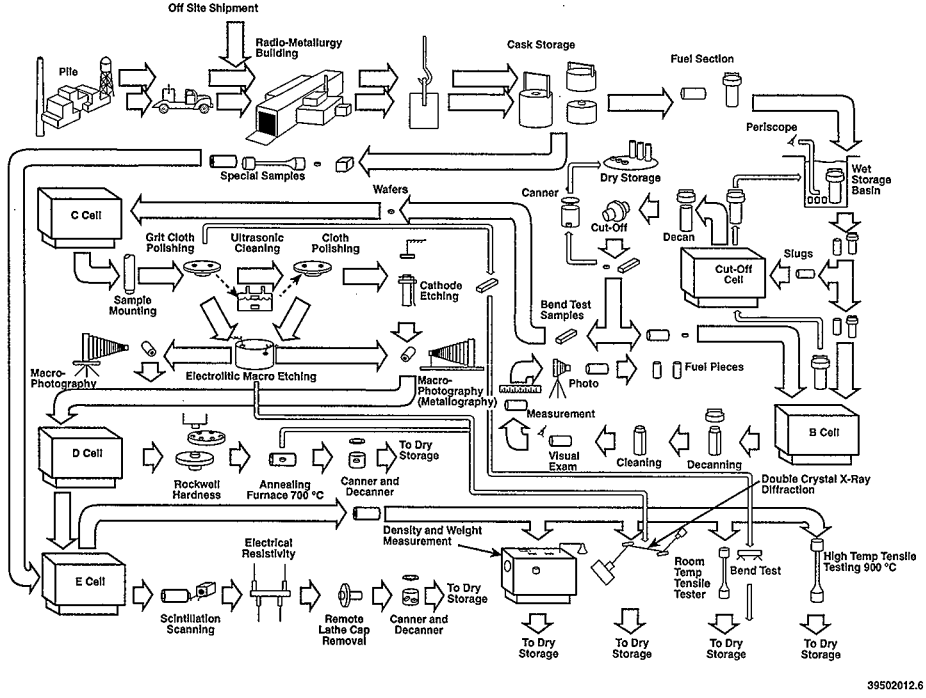

Numerous additional examinations were carried out, including hardness testing, tensile testing at room and elevated temperatures, dilatometry, density, annealing studies, and X-ray diffraction studies. Fission product gas was collected and measured from experimental ceramic fuel elements. Samples from various elements were dissolved for chemical analysis to determine the amount of irradiation each sample had received.

The 327 facility was used to examine, test, and analyze irradiated fuel specimens. Work activities included the following:

- Visual and photographic examinations
- Density and balance point measurements
- Tests on irradiated capsule assemblies and disassemblies
- Remote sample forming
- Irradiated fuel pin modification
- Assembly of irradiated fuel components
- Welding of fuel components and other hardware
- Component inspection/qualification
- Fission gas collection
- Fuel burn-up examinations
- Microstructural studies
  - Metallography
  - Ceramography
  - Microprobe sample preparations
  - Replication
- Fuel pin/capsule assembly
- Fuel cladding transient tests
- Post test recovery and examination work.

These operations produced much of the waste listed in Table 3-6, plus spent and failed equipment items. Most of this waste was contaminated with irradiated fuel specimens and is therefore of moderate or high-activity. The moderate and high-activity wastes disposed to the 618-11 burial ground were shipped from the 327 building using either the gatling-gun cask or the milk-pail cask (Gift HW-76192). The data sheets for 327 building casks used for 618-11 disposal are shown in Figures 3-33 and 3-34. A copy of the milk pail cask loading procedure is given in Appendix D.

Figure 3-33: Radiometallurgy Gatling Gun Cask

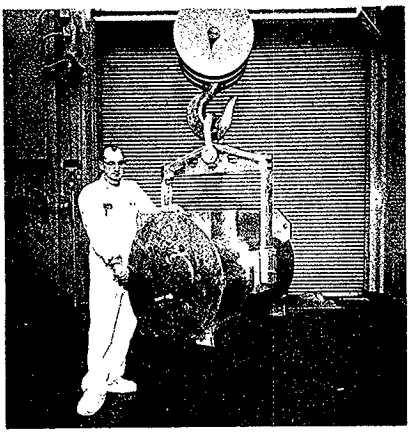

Radioactive Waste Disposal Cask

Radiomet Cask # 19 **B. of E. #** None **Dwg. #** H-3-5996 3 **Sheets**

Commonly Known As: Gatling gun cask

Dimensions: 30" **O.D. By:** 37" long

Cavity: Type: Rotating cylinder **Size, Closed:** 5-bores (1) 3.750" **Dia. By:** 17" long

Closure(s): Loading plug 3-5/8" x 10"; end plug 10" x 14"; both flanged

Approximate Weight of Removable Plug(s): 25 and 200 lbs.
Alternate Plug Length: None

Shell: 30" Sch. 30 stainless steel pipe **Cavity Liner:** Stainless steel w/stainless steel cylinder

Shielding: 7" Pb **Total Weight:** 7400 lbs.

Yoke: Attached - positionable

Normal Positions: **Loading:** Horizontal **Unloading:** Vertical*

Hauling: Vertical* **Storing:** Horizontal

* Special trailer required.
(1) Sixth bore plugged for safety factor.

Figure 3-34: Radiometallurgy Milk Pail Cask

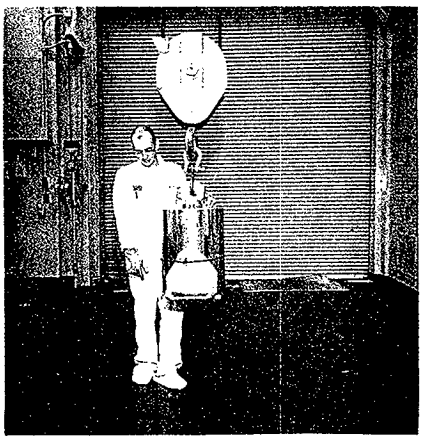

Radioactive Waste Disposal Cask

Radiomet Cask # 18 and 23 B. of E. # None Dwg. # H-3-13077 Sheets

Commonly Known As: Milk pail cask

Dimensions: 16" O.D. By: 26-1/2" high, including hitch

Cavity: Type: Inverted well Size, Closed: 7.264" Dia. By: 13-1/8" hig

Closure(s): 2" thick slide at bottom, 3/4" plug at top

Approximate Weight of Removable Plug(s): --
Alternate Plug Length: --

Shell: 16" Sch. 20 stainless steel pipe Cavity Liner: Stainless steel

Shielding: 4" Pb Total Weight: 1200 lbs.

Yoke: Attached swing

Normal Positions: Loading: Vertical* Unloading: Vertical*

Hauling: Vertical Storing: Vertical

* Bottom loading and unloading No. 18 and No. 23 have identical specifications.

Smith (1965) provided nuclear safety specifications for controlling plutonium amounts in the 327 building dry storage. The specification indicated the amount of plutonium that could have potentially been processed through the 327 building. This waste characteristic will be discussed in detail in Section 3.2.

In addition to the mixed fission products work at the 325-A hot cells, the 327 building administration had a concern about the higher enrichment Pu^{240} fuels. Fuel specimens with up to 22 percent Pu^{240} were tested for the Clinch River Breeder Reactor (CRBR) and FFTF programs, although the standard was approximately 11 to 12 percent. This markedly increased radiation exposure rates. These higher Pu^{240} enrichment values from the 327 building coupled with the Pu^{238} and Np^{237} values from the 325-A facility will be used to determine the estimated dose equivalent (EDE) onsite and offsite for remediation activities.

3.2 WASTES GENERATED

Individual waste shipment records for all wastes shipped to the 618-11 burial ground were maintained onsite until 1988 and SNM records were kept onsite until 1992. Unfortunately, both sets of records were destroyed. The loss of these two sets of records have made this work difficult and caused uncertainty about some of the information. The SNM records contained fissile assay data that are partly recorded on the SWITS database. Despite the loss of this primary records data, some burial records data were maintained and delivered to the authors of this document. PNL and WHC radiation survey records are available from record storage. Some facility shipping records have also been obtained. In addition, information has been obtained from old photographs, scientific surveys, published documents, letters, memos, and logbook data. These sources have been brought together in this document to yield characterization data of the wastes disposed of at the 618-11 burial ground. Most of the records data discovered has been tabulated and appears in the appendix or in tables throughout the text. The characterization of the waste is considered as complete as possible without the official individual waste shipment records and the corresponding fissile (plutonium) contents. This data is also intended to support development of accident scenarios, EDE release calculations, site sampling and investigation needs, safety assessment development, and other site remediation activities

Segregation of TRU wastes from non-TRU wastes was not conducted during the operational time frame of the 618-11 burial ground. Even though many understood the land use withdrawal ramifications of burying long-lived radionuclides with other radioactive wastes (Corley 1967), segregation of TRU wastes from non-TRU wastes was not mandated by the AEC until 1970. Even after mandating, segregation of TRU wastes from non-TRU wastes took several years to implement in some facilities (Craddock 1975). It should also be noted that entire disposed waste volumes became TRU through non-segregation. Craddock (1975) reports that the TRU volumes from the postirradiation facilities (327 and 324 buildings) could have been reduced by 90% if they had been segregated.

Estimated plutonium values of waste disposed to the three trenches are discussed in Section 3.6. Calculations indicate that the trenches are TRU and are significantly above the TRU limit of 100 nCi/g with an estimated 0.043 g/feet^3 plutonium density in the disposed trench waste. Characterization information and references indicate that the drum storage units and caissons are also TRU. Corley (1967) indicates that significant amounts of Pu^{239} have been disposed of to the 618-11 burial ground caissons.

The 618-10 and 618-11 burial ground shipping records that are available are given in Appendix E. The records are summarized in Table 3-7. According to this information approximately 4420 m^3 (156,201 feet^3) were disposed to the three 618-11 trenches, 50 m^3 (1,766 feet^3) to the 618-11drum storage units, and 1.0 m^3 (34.5 feet^3) to the 618-11 caissons.

Hazardous materials disposed of to 618-11 include the following:

- Cleaning solvents
- Ppainting materials
- Strip coat
- Small amounts of mercury
- Sample vials with acids (HNO_3, HCL, HF, and $H2SO_4$)
- Metallic sodium; metal alloys of chromium and nickel
- Nitrides and halides from molten salt, lead, beryllium residues, zirconium, thorium metal turnings, and uranium metal turning

Appendix F contains a list of general waste shipments made from 1962 through 1964 compiled from monthly activities reports (GE 1962-1964). Waste was sent to either the 618-10, 618-11, or the 200 W sites. The 618-10 site was used only when the 618-11 burial ground was not available. The 200-W burial ground was to be used for the high plutonium, but low beta/gamma dose rate waste. Appendix F data are summarized in Table 3-8:

Table 3-7: 618-10 and 618-11 Burial Ground Shipping Records

Trench						Drum Storage Units						Caisson	
Radioactivity Levels of <10 Ci/ft³						Radioactivity Levels of 10 - 1000 Ci/ft³						Radioactivity Levels of >1000 Ci/ft³	
Generator	All 300	325-A	325	327	Total Volume	325-A	327	325-A	325-A	325/327	Total Volume	327	Total Volume
Year	Cardboard Cartons/#	Wooden Crates	55-gal Drums/#	Other ****		55-gal Drums/#	Milk pails/#	5-gal Waste Pails/#	1-gal Waste Pails/#	CWS Filters/#		Gatlin g-gun Cans/#	
1962 a.	1962	1	0	1		68 Concreted	198	0	0	0		75	
1962 b.	1642	0	0	0		40 Concreted	0	0	0	0		0	
1963 a.	Closed	Closed	Closed	Closed		Closed	Closed	Closed	Closed	Closed		Closed	
1963 b.	1660	0	0	0		20	151	0	0	0		80	
1964 a.	3750	0	25	0		0	425	0	0	0		150	
1964 b.	4875	0	16	0		0	384	23	0	0		56	
1965 a.	4225	10	400	0		0	420	6	48	0		135	
1965 b.	3953	8	0	0		0	369	0	47	6		146	
1966 a.	3132	0	0	0		0	313	4	19	0		123	
1966 b.	2113	0	0	0		0	230	8	17	0		0	
1967 a.	2800	0	0	0		0	438	6	5	0		0	
1967 b.	3311	0	0	0		0	370	40	38	0		0	
Total	33,423	19	441	1		128	3298	7	174	6		765	
Vol. Per cont. (ft^3)	4.5	128	7.5	-	N/A	7.5	0.212	0.681	0.136	4	N/A	0.034	
Vvolume (ft^3)	150,404	2,432	3,308	-	156,144	960	699	59.2	23.7	24	1766	26	26
Volume (m^3)	4,256	69	93	-	4418	27	20	2	1	2,221	51	0.7	0.7

Table 3-8: Solid Waste Disposal Summary 1962 to 1964 from Monthly Activity Reports

Burial Site	No. of Luggers	Vol. of Luggers (m^3)	No. of Remote Containers	No. of Concrete Barrels	Vol. of Concrete Barrels (m^3)
300-N	326	923	24	154	33
WYE	573	1622	719	294	62
200-W	81	229	0	81	17

At the end of 1964, PNL assumed the site operations contract from the General Electric Company. The monthly activity reports published by General Electric were replaced by monthly and quarterly operation reports published by PNL. The latter reports did not carry any information on solid waste generation or disposal. Therefore, a careful review was made of the 1965-66 radiation survey records of waste material shipments. These survey records are given in Appendix G. Table 3-9 summarizes the items shipped to the 618-11 burial ground in 1965 through 1967 from available shipping records. The table also summarizes the items and volume of waste materials shipped, as interpreted from the records. Some container volumes had to be estimated from the container description. Also, it appears that at least part of the 1967 records are missing.

Baker (1968) reported on the solid waste generated throughout the Hanford Site for the latter half of calender year 1967. He reported that 422 m^3 (14,900 $feet^3$) of low-activity waste (0-10 $Ci/feet^3$) had been disposed to the 618-11 burial ground. In addition, the report said 13,358 $feet^3$ of PNL waste had gone to the 200 West burial ground. Only some of the PNL facilities are in the 300 Area. Using this facility base and earlier waste projections (Parks 1966), approximately 246 m^3 (8700 ft^3) of that material came from the 300 Area. Therefore, the 300 Area generated approximately 668 m^3 of low-activity waste during the last half of 1967 according to these records. About 63 percent of the waste, by volume, had been disposed to the 618-11 burial ground. The 422 m^3 six-month disposal rate at the 618-11 burial ground compares with 420 m^3 per six months based on burial records.

Table 3-9a: Radiological Survey Records (PNL, 1965)

Containers	Number of Containers	Container Volume (m^3)	Total Volume (m^3)
Boxes - plywood	5	3.62	18.1
Boxes - wooden	4	1.81	7.24
Concrete radiation boxes	28	0.76	21.28
Dump-truck loads	3	7.64	22.92
Gatling-gun casks*	33	0.0113	0.37
Small hot cell casks*	64	0.0047	0.3
Large hot cell casks*	70	0.0189	1.32
Large can casks*	16	0.0566	0.91
Lead glass window	1	0.566	0.57
Luggers	195	2.83	551.85
Milk pail casks*	235	0.006	1.41
Filters	1	0.0113	0.11
Pumps	2	0.09	0.18
Drums	13	0.208	2.7
Truck loaded with drums and/or equipment	17	8.32	141.44
Total	687	--	771 (27200 ft^3)
*Remote Containers	418	--	4.31 (152 ft^3)

Table 3-9b: Radiological Survey Records (PNL, 1966)

Containers	Number of Containers	Container Volume (m^3)	Total Volume (m^3)
Boxes - plywood	6	3.62	21.72
Drums	49	0.208	10.19
Dump-truck loads	3	7.64	22.92
Gatling-gun casks*	10	0.0113	0.11
Glove boxes	2	2.72	5.44
Small hot cell casks*	26	0.0047	0.12
Large hot cell casks*	44	0.0489	0.83
Large can casks*	14	0.0566	0.79
Luggers	156	2.83	441.48
Milk pail casks	128	0.006	0.77
Truck load (55-gal drums or equipment)	40	8.32	332.8
Truck load (35-gal drums)	1	5.29	5.29
Truck load (15-gal drums)	2	2.27	4.54
Miscellaneous:			
Filters	5	0.113	0.57
Concrete anchor	1	~0.2	0.2
Furnace and controllers	3	~0.2	0.6
Bird cages	12	0.208	2.5
Ballast	1	~0.2	0.2
Total	503	--	851 (30070 ft^3)
*Remote containers	222	--	2.62 (92.6 ft^3)

Table 3-9c: Radiological Survey Records (PNL, 1967)

Containers	Number of Containers	Container Volume (m^3)	Total Volume (m^3)
Boxes - plywood	16	3.62	57.92
Drums	5	0.208	1.04
Filters	2	0.113	0.23
Gas bottles	2	~0.1	0.2
Large hot cell casks	1	0.0047	0.005
Large can casks	2	0.0566	0.11
Luggers	7	2.83	19.81
Truck-loads (Drums)	2	8.32	16.64
Total	37		96 (3390 ft^3)

3.3 LOW-ACTIVITY CONTAMINATED WASTE

Low-activity wastes include any contaminated or potentially contaminated material from general operations, laboratory, and other working areas outside of gloveboxes, hot-cell, and reactor core work. These wastes were generally classified as containing <10 Ci/feet^3. Such waste is collected in the standard 18 inch square by 24 inch high cardboard carton that have a large radiation symbol painted on each side. Filled cartons were stored outside the main buildings in load luggers. The cartons were typically disposed of at the 618-11 burial ground in an open trench. Waste additions to the trench were covered weekly or sooner if required. Waste in steel drums, concreted and lead-lined steel drums, wooden boxes, and plastic wrapped spent equipment were also buried in the trenches. These packages contained cut-up equipment that was too heavy or too difficult to package or contaminated items that exceeded the radiation limit of a carton. Cartons only had a 65 pound weight limit.

The normal waste output for the 327 building was about 50 cartons per week (12 shift operation). The 325 building generated approximately a truck load, or 25 cartons per week. Radiation levels generally varied from about 5 to 200 mr/hr at one foot from a sealed carton. However, much higher readings were encountered on occasion, and drivers sometimes had to trade off driving chores on the burial ground run to keep from exceeding personal radiation exposure levels.

Other buildings in the 300 Area that generated cardboard carton wastes disposed at 618-11 burial ground included 324, 3706, 321, 340, and occasionally the 306, 308, 309, and 329.

3.4 INTERMEDIATE-ACTIVITY CELL WASTE

Intermediate-activity waste was classified as containing 10 to 1000 Ci/feet3. This waste was produced in large quantities in five of the 327 building hot cells. Intermediate activity waste was disposed in expendable waste cans, and milk pails during the 1960s. The intermediate waste was generated primarily from the 327 building hot cells, although some came from either the 325-A or 325-B hot cell. Table 3-10 gives a reasonable representation of the waste from the 327 building. Waste from the 325-A hot cells would contain more equipment and hardware. The 325-B hot cells would contain small vials, bottles, and both solid and liquid analytical samples and sample residues. Most liquid samples were acid solutions or slurries. These intermediate waste forms from the 325 building hot cells represent moderately radioactive materials, but exclude most irradiated materials. These wastes were primarily disposed to the drum storage units.

Radiation levels for loaded intermediate waste casks were generally the same, or slightly higher than those of radioactive waste cartons. The radiation levels were typically 200 mR/hr at one foot, with occasional higher readings. Table 3-11 is a list, obtained from 327 operations log

books, of the milk pails shipped from the 327 building hot cells from January 1965 through June 1966. During that 18 month period, 346 pails were generated giving an average rate of 19 pails per month. The table also shows which cells generated the milk pails.

Table 3-10: Metallurgical (327 Building) Waste Materials

Tampon wipes
Paper towels
Tissues
Plastic sheeting
Paper or cardboard sheeting
Plastic pipe caps
Plastic vials and caps
Corks
Nylon sample grinding caps
Rubber stoppers
Rubber tube caps
Steel pipe plugs
Glass dishes
Nylon paint brushes
Tubing cutters
Stanley utility knives
Plastic bags
Grinding discs
Polishing discs
Aluminum brads
Cotton swabs
Manipulator boots and bands
Ice cream cartons
Aluminum weights and blocks
Stainless blacks
Paint spray cans (punctured)
Cloth rags
Plastic bottles
Rubber canner gloves
Other varieties of gloves
Small tools
Small or cut-up equipment items
Small or cut-up instrument items

Table 3-11: Number of Milkpails from 327 Building

	Cell										
Date	A	B	C	D	E	F	G	B-NORTH	B-SOUTH	Total	Total Volume (M^3)
Jan-65			2			5				7	0.05
Feb-65	10	6	19							35	0.23
Mar-65			2	2	1	2				7	0.05
Apr-65	9	3	18	2	12	6			1	51	0.34
Jul-65		6	1							7	0.05
Aug-65	5		1	1			1			8	0.05
Sep-65	5					5				10	0.07
Oct-65	3		1		3					7	0.05
Nov-65	2					3				5	0.03
Jan-66	6	2	11	2	6	7	4			38	0.25
Feb-66	8	4			12	10				34	0.22
Mar-66	7	2	5	5	12	8	4	7	1	51	0.34
Apr-66	5	1	4	1	6	8	3			28	0.19
May-66	10	1	7	4	7	5	1			35	0.23
Jun-66	1	2	4	4	6	3		3		23	0.15
Total	71	27	75	21	65	62	13	10	2	346	
Total Volume (M^3)	0.47	0.18	0.5	0.14	0.43	0.41	0.09	0.07	0.01	2.29	

3.5 HIGH-ACTIVITY WASTE

High-activity wastes were primarily irradiated nuclear fuels and materials upon which tests, assays, or lab studies were performed. It also included materials used in fission product recovery, and purification studies from either irradiated fuel or liquid waste streams. The work activity generating these wastes was separate from the plutonium production process. High-activity waste is classified as containing greater than 1,000 Ci/feet^3.

High-activity waste generated in the 325-A hot cells was packaged in one-gallon paint cans with crimp-on lids. These cans were filled with various types of wipes, samples, tools, and cut up equipment. The cans were typically loaded on a push through trough that was loaded in the cell, then pulled back into the cask. The cask lid was closed and the cask was removed from the hot cell. General radiation exposure levels of high-activity waste were determined to be about 1,000 R/hr at the surface of the waste with occasioned hot spots up to 10,000 R/hr. Table 3-3 summarizes the hot cell waste generated from 1961 through 1967 at the 325-A cell facility obtained from the operating logs (Appendix A). The high-activity waste is limited primarily to the one and five-gallon can material transported in the shielded one and seven-ton casks. The 15-gallon black iron cans and similar materials were generally regarded as intermediate level wastes (significantly reduced dose rate) and were generally disposed of to the drum storage units. The high-activity one and five-gallon cans were disposed to the caisson units.

The volume of high-activity waste that went to the 618-11 burial ground from the 325-A hot cells was approximately 164 m^3 of trench waste, 9.6 m^3 of drum storage unit waste, and 5.6 m^3 of caisson waste, based on the information in Table 3-3.

High-activity waste from the 327 building was canned in a commercial one-quart juice can that was disposed using the gatling-gun cask. The cask provided seven inches of lead shielding and handled 12 cans in a rotating six barreled chamber.

3.6 TRANSURANIC CONTENT

References vary widely on waste plutonium contents disposed to the 618-11 burial ground. Some inconsistencies even occur within the same record. However, a number of references provide the approximate plutonium content for the 618-11 burial ground. Voiland (1970) says <100 grams of plutonium were disposed at 618-11, <1,000 Ci beta/gamma, and approximately 120,000 feet^3 of buried waste. Then Voiland (1970) states tens to hundreds of grams of plutonium and thousands of curies of beta/gamma were disposed of there. Speaking in general about plutonium content at the 618-11 burial ground, Voiland states: "Recognized plutonium wastes were either contained in concrete, confined to the caissons or shipped to 200 West burial sites." Berreth (1963) says some of the wastes will contain plutonium in fractional grams or greater. Backman (1964) reports that 3.51 g of plutonium went out in the liquid waste for

July 1964 and 1.15 g in August. However, no plutonium values were listed for the 10 concrete drums, 94 load luggers of waste cartons, and 171 containers of high level dry waste that were disposed during those two months to the 618-11 burial ground. During the same two month period nine concrete drums and 13 load luggers of waste cartons were disposed to the 200 West Area (Backman 1964). An effort was made from the fall of 1963 through 1967 (Berreth 1963) to ship recognized plutonium waste from the 308 and 325 buildings to 200 West for disposal. However, there were exceptions. Building 325 generated hot cell wastes and other high dose rate plutonium wastes that were shipped to the 618-11 burial ground. Therefore, by the fall of 1963, low-activity plutonium waste from 308 and some from 325 building went primarily to the 200 West Area rather than the 618-11 burial ground. Essentially all other 300 Area buildings and facilities, including 321, 327, 3706, 340, 306, 324, 3718, and 326 sent waste only to the 618-11 burial ground. The PRTR (309 building) sent waste to the 618-11, but a small portion also was sent to 200 West.

Stevens (1963) indicates that multi-curie content plutonium waste with Sr^{90}, and other isotopes have been encased in concrete prior to disposal at the 618-10 and 618-11 burial grounds. Geiger (1977) indicates that 100 g of known plutonium were disposed to the 618-11 burial ground, but indicates that records were not certain. The plutonium value might be on the order of five kg. Coony (1985) lists the 618-11 site as having 10,000 grams of plutonium or about 960 curies. That is the value also listed on the most recent reference (DOE 1987), 10,000 g of plutonium and 960 Ci of TRU waste. The document also listed the disposed waste volume at 7,900 m^3 and overburden volume at 18,000 m^3. If credit is taken for the overburden soil in determining the plutonium density, the 618-11 burial ground exhibits a TRU density of 68 nCi/g. The waste would then be considered non-TRU if the overburden soil is accepted as contributing to the weight of the waste. If the overburden soil is not considered as contributing to the waste weight, the waste is TRU.

An overwhelming number of references agree that the drum storage units and caissons are TRU waste. Corley (1967) states that waste packages with significant amounts of Pu^{239} have been disposed in the silos (drum storage units and caissons) at the 618-11 burial grounds. .

More in-depth discussions about the plutonium content of the trenches revealed that both TRU and non-TRU waste was buried in the standard waste carton. In addition, the concrete drums buried in the trench often contained TRU solid and liquid waste. No data are available, nor is there an easy way to estimate, the plutonium content of the concrete drums. However, an estimate of the balance of the trench content can be made from available data on 300 Area laboratory waste generated in 1968 and also assay data from the 1970s (Cooley 1975).

Hall (1969) listed the burial volumes and plutonium contents of waste from the various Hanford Site sectors. PNL is listed as having generated 1,355 m^3 (47,900 $feet^3$) of waste containing 18.5 kg of uranium, 1,020 g of plutonium, and 1,590 Ci of radioactivity. An

appreciable portion of the waste volume might have come from PNL operating areas other than the 300 Area. However, the plutonium content is primarily from the 300 Area. Therefore, it appears that the solid waste being generated in the 300 Area in the mid-1960s was contaminated with approximately one kg of plutonium per year. Other TRUs such as americium were generally ignored unless they were SMN material. Therefore, the actual TRU content would be slightly higher because the burial ground also contains U^{233} and U^{235}, neptunium, americium, and perhaps curium and californium.

The laboratory waste generated in the 1960s was mostly packaged in standard cardboard cartons. Little effort was made to distinguish between non-TRU (fission, by-product, or activation product) and TRU waste (Craddock 1975). All waste was packaged and placed in building load luggers. In addition, carton-type waste also included CWS filters from open-face hoods, plutonium gloveboxes, and hot cell facilities. The filters were generally packed in the original (4.0 $feet^3$) cardboard cartons.

The plutonium content of the 618-11 burial ground trenches was estimated in three different ways:

- Specific survey information from the first half of 1975 was used to calculate an average plutonium density.
- The total plutonium content of the waste for the mid-1970s was totaled and corrected to give a total plutonium content.
- An estimate of the plutonium and other TRUs handled in the 300 Area in the mid-1960s was made. The amount going to waste, including the 618-11 burial ground, was estimated.

The data given in Table 3-12 show that from January through June 1975, 1,530 $feet^3$ of TRU waste were generated against a total waste volume of 16,704 $feet^3$. This gives a 9 percent TRU fraction (10 percent being quite typical in the 1970s). During the same period, 723.2 g of plutonium were assayed in the waste, amounting to an average plutonium density of 0.043 $g/feet^3$. The total volume of trench waste listed for the 618-11 burial ground was 155,151 $feet^3$. Multiplying the density times the total volume gives a total plutonium estimate of 6,720 g. The waste weighed approximately 127 pound/drum or 16.93 $lb/feet^3$. Assuming the plutonium to be mostly Pu^{239} (0.08 Ci/g), the trench TRU density totals approximately 450 nCi/g, which is 4.5 times the TRU limit. Diversion of some of the waste from the 308 and 325 buildings to the 200 West disposal area probably resulted in a 10 percent reduction in the amount of plutonium buried, so the plutonium density would be about 400 nCi/g. Therefore, it still appears that wastes disposed to the 618-11 trenches is TRU, based on total waste average. No correction was made nor credit given for soil overburden. If the volume and weight of the

overburden soil (density 6 to 7 times waste) is considered as part of the waste, the plutonium density less than 100 nCi/g and it would be non-TRU.

Table 3-12: 300 Area Waste Shipment volumes Generated by Hanford Engineering Development Laboratory

Waste Designation (in ft^3) *Transuranic (TRU)*	CY-1973 July - Dec.	CY-1974 Jan. - June	CY-1974 July - Dec.	CY-1975 Jan. - June
Non-TRU (FP & other)	13,215	20,715	16,779	15,174
TRU	3,320	883	1,088	1,530
Total	16,535	21,598	17,867	16,704
Percent Non-TRU	80%	96%	94%	91%

Using the second method to estimate the plutonium content, the average 300 Area waste content from 1974 through 1977 was used to project a plutonium value. The plutonium values are given in Table 3-13.

Table 3-13: Plutonium in 300 Area Waste

Date	Total Pu
CY-1974	1,304 g
CY-1975	1,579 g
CY-1976	669.7 g
CY-1977	1,053.8 g
Total	4,606.5 g

Four years of nuclear operations generated waste material contaminated with 4,606.5 g of plutonium. The 618-11 burial ground was open about 4.8 years, with a projected generation of 5,528 g. The trench plutonium density based on the latter estimate would be 375 nCi/g. Correction for 10 percent diversion to the 200 West Area would make that approximately 335 nCi/g. This indicates the trench wastes are TRU.

Another way to estimate the plutonium content of the 618-11 burial ground is to approximate the amount of plutonium being handled by the 300 Area during the period. Section 3.1.1 indicated that at least 2,400 g of plutonium were expected to have been disposed to the

618-11 burial ground from PRTR activities. Other work activities, mentioned in Section 3.1.2, indicate a substantial amount of non-PRTR work occurred, such as radionuclide separations, reprocessing studies, 327 studies on non-PRTR fuels, and radiochemical analyses. Many of these activities involved the use of plutonium, neptunium, or other transuranics.

The 325 building operated under a criticality limit of 2000 g per laboratory and 230 g per fissile station (Berreth 1962). The building operating limit over the years has varied , but was typically five kg fissile. The actual operating fissile inventory was typically two to three kg. The 327 building handled less fissile material. Their limit was approximately 230 g per cell. The 327 building had ten hot cells and some other fissile stations . The 327 building typically operated at about 20 percent of their fissile limit, which calculates to be about 500 g. The approximate minimum fissile inventory total for the two buildings would be 2,500 g.

Other buildings, such as 326, 3706, 329, 3718, and other small facilities, were primarily limited control facilities with a maximum fissile limit of 170 g fissile. Other facilities such as the 324, 340, 305, and 306 varied depending on the work activities. During the 1960s these facilities had nuclear safety specifications that allowed greater than 170 g fissile, but lesser fissile quantities than nuclear facilities like the 325 or 308 buildings. The total fissile inventory of the rest of the 300 Area was perhaps another 2,500 g. It seems reasonable to expect that during and 4.8-year operation of the 618-11 burial ground, most of the 300 Area fissile inventory would have been tested, analyzed, synthesized, metalographed, processed, or otherwise treated and discarded to waste. Therefore, the 300 Area waste fissile material inventory, combined with that from the PRTR would generate about five kg of plutonium waste that would have been disposed to the 618-11 burial ground. In addition, there was approximately one kg of designated plutonium waste material that was sent to 200 West for disposal.

3.7 TRU CONTENT COMPARISONS

The 618-11 burial ground TRU content figures presented in this document need to be compared with other well documented waste disposal sites. Other Hanford waste disposal figures and national waste disposal figures can be compared to validate the 618-11 TRU content figures presented.

The SWITS database lists the volume of solid waste generated since Hanford Site operations began in 1944 through 1967 in Table 3-14. It shows that during that time 164,916 m^3 (5,827,420 ft^3) of waste was generated. That waste contained an estimated 347,205 g of plutonium for an estimated average density of 2.1 g/m^3 compared with that of 1.4 g/m^3 estimated for the 618-11 burial site.

Table 3-14: The Average Hanford Site Soild Waste Fissile Density

Year	Waste Volume (m^3)	Accumulative Volume (m^3)	Pu Content (g)	Accumulative Pu Content
1944	14	14	0	0
1945	2104	2118	1340	1340
1946	2161	4279	1340	2680
1947	3576	7855	1435	4115
1948	3520	11,375	1435	5550
1949	3607	14,982	6415	11,965
1950	4822	19,804	21,360	33,325
1951	4737	24,541	31,320	64,645
1952	5434	29,975	32,335	96,980
1953	5747	35,722	30,200	127,180
1954	7153	42,875	31,700	158,880
1955	9010	51,885	33,340	192,220
1956	8317	60,202	34,905	227,125
1957	8807	69,009	31,965	259,090
1958	7797	76,806	32,555	291,645
1959	7739	84,545	6975	298,620
1960	8914	93,459	3300	301,920
1961	5125	98,584	5890	307,810
1962	5834	104,418	565	313,505
1963	4980	109,398	6160	319,665
1964	5802	115,200	6500	326,165
1965	25,059	140,259	6450	332,615
1966	5101	145,360	6660	339,275

Table 3-15 summarizes waste characteristics from the commercial burial sites. The activity of the commercial burial sites is reviewed for comparative purposes only. The table shows the waste volumes buried at commercial disposal sites throughout the United States during 1966, 1967, and 1968. The SNM density average for the sites was 1.7 g/m^3 for the entire country, drawn from only the commercial waste burial sites. The fissile content of the 618-11 burial ground, based on estimates in this document, place it less than the overall Hanford solid waste fissile average and less than the commercial nuclear waste for a comparable time frame. This demonstrates that Hanford fissile waste loading disposed to the 618-11 burial ground parallels the expected norm. With all the diversified operations conducted in the 300 Area (reactors operations, fuel fabrication, fuel reprocessing or reprocessing studies, analytical support, fuel testing, and materials separations and purification), to produce a waste that exhibits an average or slightly less than average comparable fissile density is conceivable.

Table 3-15: Fissile Density of Commercial Waste Buried During 1966-67

Burial Site	Year	Waste Volume (m^3)	Fissile Content (g)	Fissile Density (g/m^3)
Morehead, KY	1966	5,560	7,462	1.34
	1967	7,820	14,842	1.90
Sheffield, IL	1967	2,530	1,238	0.49
	1968	2,710	1,754	0.65
Beatty, NV	1966	3,530	5,782	1.66
	1967	3,210	22,644	7.05
Richland, WA	1966	2,403	1,418	0.59
	1967	870	0.16	0.0002

3.8 SOURCE MATERIAL AND BY-PRODUCT CONTENT

An accurate accounting of source material and beta/gamma by-product material (uranium and thorium) was either lost or not kept for 618-11 burial ground wastes. However, 300 Area shipping records for the 1965-67 time period (see Appendix G) contains information that will allow estimation of the source material content. Also, the beta/gamma curie content can be estimated from volume of the different waste activity levels summarized in Table 3-7 for the whole 1962-1967 time period.

The shipping records indicate that at least seven truck loads and two load luggers of thorium waste, five truck loads of uranium waste, and at least four drums of uranium/thorium metal turnings scrap were disposed of in the 618-11 burial site during 1965-1967. Assuming each waste drum in the truck load contained one to 10 kg of source material contamination, approximately 100 kg per load lugger, and each drum of scrap weighed 100 kg, there is about 3,000 kg of source material present. In addition, assume about 1,000 kg of source material present in miscellaneous waste cartons not initially identified as containing the material. The total disposed would be 4,000 kg. Additionally, fuel fabrication operations were ongoing, so source material contamination was being generated. It is assumed that an additional 2,000 kg of source material from fuel fabrication was disposed. This quantity is small because N- Reactor did not become operational until 1964. This gives a total of 6,000 kg of source material disposed at the 618-11 burial ground. Approximately one-third or 2000 kg was uranium, with the majority being slightly enriched uranium (0.95 or higher). In total, the site could contain three to four kg of U-235 SNM in excess of the natural uranium (0.72%).

4.0 RADIOACTIVE RELEASES (UPDATED 9/29/97)

The use of the 618-11 burial ground for disposal of a wide variety of radioactive materials has resulted in occasional radioactive contamination releases. In general, the contaminated area was isolated as quickly as possible, uncontaminated soil placed over the contaminated soil, and packed in place. The area was then surveyed to ensure that the contamination was completely covered. A record of site contamination releases, including 618-11 burial ground, is given in Appendix H.

Appendix H, a chronology of contamination incidents from 1956 through 1971, lists nine incidents at the 618-11 burial ground. The Hanford Inactive Site Surveillance database given in Appendix I lists only seven incidents at the 618-11 burial ground. Appendix I omits contamination incidents dated January 14, 1965; October 12, 1965; and October 17, 1967. Appendix I also has incident information for September 30, 1963 at the 327-2 drum storage unit at 618-11 and differs from Appendix H, which indicates 618-10 burial grounds as the location of the incident. The issue of location seems to be cleared up with General Electric, 1962-1964. Reported in the October 1963 Monthly Activities Report is the following: "The "Wye" burial ground, contaminated during a milk pail dumping operation, was cleaned satisfactorily". This leaves little issue that the contamination spread of September 30, 1963 occurred at the 618-11 burial ground. Therefore, there were a total of 10 reported contamination incidents at the 618-11 burial ground.

All radioactive release incidents, except two (Appendix I) indicate contamination spreads occurred while dumping wastes into the caisson or drum storage units. Only one incident report provides wind direction data and another reports the contamination spread was limited to a fan shaped area extending northeast from the dump chute (Appendix I). Hanford meteorology wind data from meteorology Station 12 (closest to the site), indicate that winds blow almost exclusively from the northwest, west, or southwest. These data would support contamination spreads to the northeast, east, or southeast.

One incident report also indicates water was sprayed on contaminated areas to wash contaminants into the soil and inhibit wind-aided spread of material (Appendix I). Spray downs to control contamination spread have been widely used at Hanford before or during waste disposal and during construction excavations. R. L. Spinks, a 327 building worker, also recalls coal clinkers being dumped around some caisson units so trucks could get traction in the sandy soil. This would also aid in keeping contamination down. Presence of the coal clinkers could account for the black strip seen in Figures 2-9 and 2-10.

Cadwell (1971) records, "the most extensive contamination spreads occurred at the 300 North and 300 Wye burial grounds. The contamination is not detectable at the present time because of radioactive decay, dispersion by wind and rainfall, or because of action taken at the time such as blending of the dirt, occurred to cover the contamination. The area north of the

618-11 burial ground was bladed in 1967 to cover fission product (primarily Ru^{103}) contamination spread in April of that year."

Wind erosion and subsequent contamination spreads were reported on several radiological survey sheets through 1974. Uptake of short-lived fission products by plants and grasses led to discovery of plant seeds or dried plants reading up to 40,000 counts/min. Small subsidences were also reported, which were of additional concern for further contamination spread (Maxfield 1973). To control the situation and ensure that unauthorized personnel would not enter the 618-11 burial ground area, an eight-foot chain-link fence was erected around the burial ground in July 1974 (J.A. Jones 1974 and ARCO 1974). The secured burial ground (eight-foot chain-link fence) is apparent in Figure 2-11.

Several loads of earth fill and gravel were placed on the burial ground to cover contamination spots (Maxfield 1974a and 1974b). A final stabilization effort to end sporadic contaminations and secure the area for the Washington Public Power Supply System operation was conducted in June 1982. It included two additional feet of soil, seeding the soil with grass, and irrigating the seeded fill. Semi-annual and quarterly surveys taken from 1982 until 1992 reported no detectable contamination above background levels (Conklin 1982, and Borup 1992). Monitoring of the burial ground continues.

5.0 BURIAL GROUND CLOSURE (UPDATED 9/25/97)

5.1 JUSTIFICATION

The decision to move burial grounds away from the 300 Area was made in the 1950s due to projected high dose rate exposures to site and fire personnel (Gerber 1992). The decision to close the 618-10 burial ground was based on the same reasoning. Fires or wind-borne contamination accidents would likely contaminate large areas and close Highway 45 (Backman 1963a). Also, the AEC was in the process of reviewing the burial ground location (General Electric, 1962-1964) and recognized the contamination potential and the adverse public opinion to contaminations that could impact a large population of employees or off site personnel. Land off the 200 Area plateau was also recognized as being released for reuse or free access in the future (Keene 1963 and Corley 1967). The following concerns and policies about burial practices at 618-11 were first documented in April 1963 (Backman 1963a):

- The only sites suitable for all types of solid waste disposal were located on the 200 Area plateau.
- Severe contamination spreads at a single burial ground would limit the use of the site for extended time periods.
- Current policies and procedures to control radiation exposure, the disposition of radioactive materials to the ground, and the minimization of disposed sites were given.
- The "Wye" burial ground would be continued only until the capacity of the existing trench is exhausted.

Berreth (1963) discussed the need to dispose of plutonium wastes in fractional grams or greater quantities and requested guidance to be able to do so. Backman (1963b) indicated that several facilities in the 300 Area were working with plutonium, and that the plutonium wastes should be segregated and disposed of to the 200 Areas. Stevens (1963) indicated that wastes containing multi-curies of plutonium, Sr^{90}, and other isotopes were encased in concrete and disposed of at the 300 Area (618-10 and 618-11) burial grounds. Stevens also questioned the need, other than fencing, to control the 300 Area disposal sites and proposed allowing some contaminated solid wastes containing plutonium and Sr-90 to be buried at 618-11. Keene (1963) recommended that Hanford laboratory facilities dispose of plutonium or Sr^{90} containing wastes to the 200 Area burial sites because further site diversification and the establishment of new industries would allow more non-project people contact with 300 Area burial sites. Consequently, the 300 Area burial sites and the wastes to be received by them would become more difficult to control. A reference of actual implementation of procedures or policies to limit disposal of certain radionuclides by gram quantity or curie activity, which "shall be disposed to the 200 Area burial grounds" was not found, although general company or facility guidance was given (Berreth 1962 and BNWL 1967).

The justification to close the 618-11 burial ground seems to have come as an Atomic Energy Commission (AEC) document. Corley (1967) indicates that the final text of the AEC-RL00 Manual, Chapter 0510 will state that solid wastes containing certain long-lived nuclides, including Sr-90, Cs-137, and Pu-239 should be buried only on the 200 Area plateau. The reference also states that the purpose of the burial ground closure "is to avoid unreasonably long (>100 years) denial of other potential usage of land containing isolated waste disposal sites, as well as to provide longer soil columns to ground water for nuclides of both long half-life and high radiotoxicity". The reference also states that waste packages with significant amounts of Pu-239 have been disposed in the silos (drum storage units and caissons) at the 618-11 burial ground.

In Hall (1967), support for the forthcoming AEC closure is given and suggests alternatives be examined to be better prepared when the closure request came. The burial ground was closed December 31, 1967.

5.2 STABILIZATION

After the closure of the 618-11 burial ground on December 31, 1967, all plutonium and mixed-fission product wastes were transported to the 200 Area plateau for disposal. Closure of the 618-11 burial ground basically ended all solid waste disposal in or around the 300 Area, except for one trench burial ground north of 300 Area that accepted only uranium fabrication wastes (SNM by-product material).

After the 618-11 closure, both the TRU and low-activity beta-gamma wastes were combined and disposed to trenches in the 200 East and 200 West Areas It was not until April 1970 that the AEC ruling was issued directing contractors to separate waste containing TRU elements, and to place it in retrievable storage. Retrievable waste was to be separated from other radioactive wastes because of concerns about long-lived toxicity. However, segregating TRU wastes from non-TRU wastes took several years to implement in some facilities (Craddock 1975). Moderate and high-activity beta-gamma wastes were disposed to the 200 West Area beta-gamma caissons in one-gallon and five-gallon buckets. Larger, moderate or high-activity wastes (boxes, drums, and equipment) were shielded and disposed in the 200 West Area trenches as remote-handled (RH) waste. All solid wastes having contact dose readings of 200 mR/hr or greater were designated RH when disposed.

Final site closure housekeeping was made during 1968 (Corley 1968, Hall 1968). Hall (1968) listed the final site closure activities for the 618-11 burial ground. The entire site was backfilled and covered with a four foot layer of soil. Perimeter radiation concrete posts (1.5 m high, 0.3 m in diameter) were installed in 1968 (Cadwell 1971). The posts were fitted with stamped brass radiation hazard markers which included topographical coordinates (Cadwell 1971). The retired burial ground was placed on a monthly survey surveillance.

Native grasses and tumbleweeds began to revegetate the site. The contamination incidents at the site made subsurface contamination available to the plant life. Dispersion of

contamination by wind began to be a problem. The wind dispersion, combined with uptake of contaminants by deep-rooted plants, particularly tumbleweeds, and reported subsidences at the site, gave typical survey readings of 20,000 to 40,000 cpm on the site surface (Maxfield 1973, 1974a). It appears the site was surveyed monthly through July 1974, although Corley (1967) requested only an annual survey.

The unauthorized entries (Saueressig 1981) and continued spread of contamination by plants and wind, justified enclosing the 618-11 site with an eight-foot chain-link fence. Localized contamination was covered with gravel and three loads of soil (Maxfield 1973, 1974b, 1974c). The fence to curtail access to the site was approved and erected on July 25, 1974 (J.A. Jones 1974).

The site continued to be plagued by plant and wind erosion contamination problems. Radiation surveys T81-1138 (October 31, 1981), T82-0222 (February 23, 1982), T82-0487 (April 5, 1982), and T82-0527 (April 14, 1982) report radiation counts to 30,000 cpm. Soil coverage attempts to control contamination at the site were not successful.

A final stabilization was initiated in April 1982 (Bracken 1982). The stabilization effort placed two additional feet of soil over the site and leveled the soil with heavy equipment (WHC 1983). The stabilization effort was completed on June 9, 1982. The site was then seeded with crested wheat grass and irrigated for 6 weeks. The radiation survey conducted after stabilization indicated no radiations levels above background (Conklin 1982).

Subsequent surveys, conducted after 1982, indicate the soil overburden intact, no detectable radiation levels above background, and the crested wheat grass has adapted well and covers approximately 90 percent of the site surface (Figure 5-1). Documented confirmation is best provided by Borup (1992). Borup's July 1992 radiation survey report is an example of the "no detectable contamination" survey reports. Radiation surveys of the 618-11 burial ground from the 1982 stabilization work through 1987 were done semi-annually. In 1988, the radiation survey frequency of the site was increased from semi-annually to quarterly, which is the current frequency schedule.

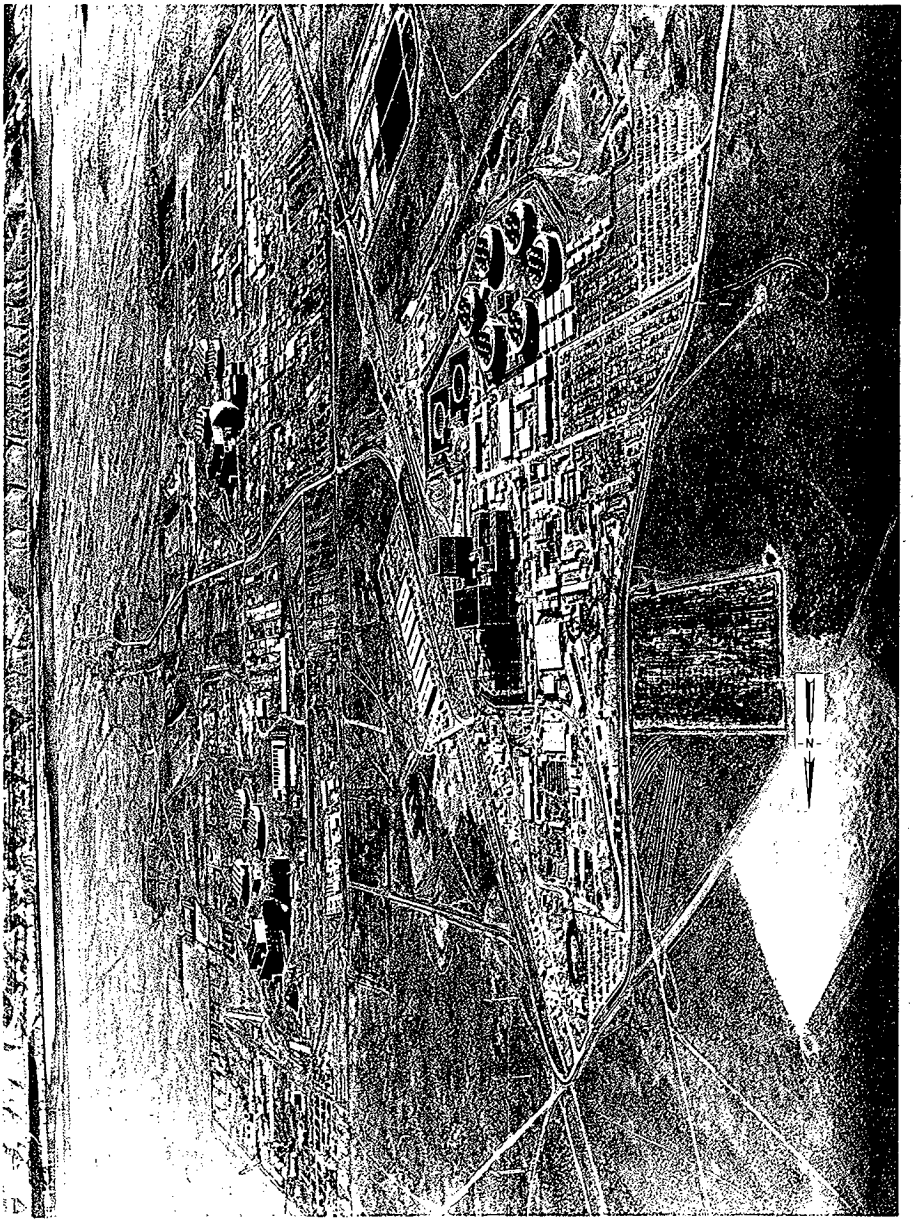

Figure 5-1: Stabilization Success at 618-11

6.0 MONITORING AND SURVEILLANCE (UPDATED 9/30/97)

6.1 WATER TABLE DATA

The location of the 618-11 burial ground relative to the water table and moisture penetration from rainfall indicate that the minimum depth to ground water beneath the site is 18 m (59 ft) (Brown 1977). In 1974, rainfall at the Hanford Site was 170 percent of normal. That rainfall penetrated less than 5.5 m (18 ft) into the sediments at a field test site located south of the 200 East Area. A normal rainfall would typically penetrate two to four m (6.5 to 13 ft) (Geiger 1977). The data also indicated that on the average, more moisture has evaporated from the ground than has been recharged by precipitation. Below nine meters (29.5 ft), the sediments are extremely dry. In this desiccated zone, the ability of sediments to transmit water is significantly reduced (Brown 1977). Shortly after the 618-11 site was closed, it was covered with four-feet of soil. An additional two-feet of soil was added during final stabilization in 1982. This means that the bottoms of the trenches and eight-foot diameter caissons are now 31 feet below grade. The bottoms of the drum units are 21 feet below grade. All metal storage units that have been used are capped with a concrete plug. Thus, the probability that any contaminants have been leached into the soil below the burial grounds due to precipitation is extemely low. Although the bottoms of the metal storage units and some caissons are open, only plastic wrapped or containerized solid waste has been stored there. Any liquid accompanying the solid waste will have been fixed with adsorbents and will not have traveled significantly in the extremely dry soil at that depth.

6.2 WELL MONITORING

Monitoring wells were chosen to present upstream and downstream data. Permeation rates are not included, although they are low. The relative time for water to flow between two typical monitor wells is measured in terms of monthly units. Well #8-17 is approximately 2.87 miles west/southwest of the burial site and is upstream in the water table, although flow proceeds south of the site approximately 1.5 miles. Well # 15-15B is approximately 2.34 miles west/northwest and upstream from the site and is nearly in a direct water table line with the site. It is also nearly in a direct flow line from the burial site. Figure 6-1 shows these relationships. Figures 6-2 through 6-5 show concentrations of tritium, nitrate, beta, and alpha both upstream and downstream from the site. In some of the graphs, the concentration of radionuclides appears to be higher downstream and in others it appears to be lower. This is probably due to peaks passing wells at intervals, the low permeation rate, the southerly location of Well #8-17, and the fact that it is approximately 5.2 miles between wells #15-15B and #10-E12.

A detailed study would needed to determine whether this specific burial site is contributing to groundwater or subterranean contamination. The study would need to include both groundwater sampling and soil sampling. The general groundwater monitoring program for the Hanford Site has shown that no appreciable radioactive contamination has been detected in the groundwater that can be attributed to buried solid radioactive waste (Geiger 1977). However, comprehensive and detailed burial ground site studies have not been done to confirm these results.

Figure 6-1: Hanford Site Map

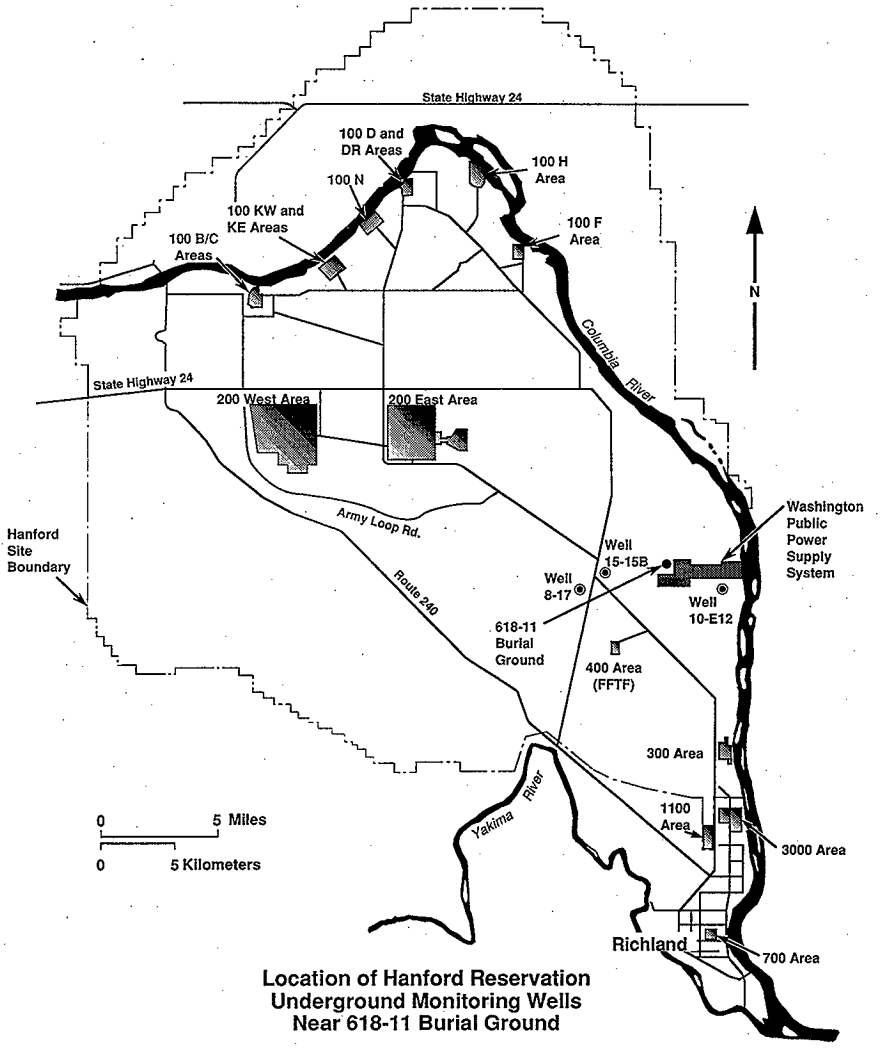

Location of Hanford Reservation Underground Monitoring Wells Near 618-11 Burial Ground

39304016.1

Figure 6-2: 618-11 Burial Site Tritium Concentration

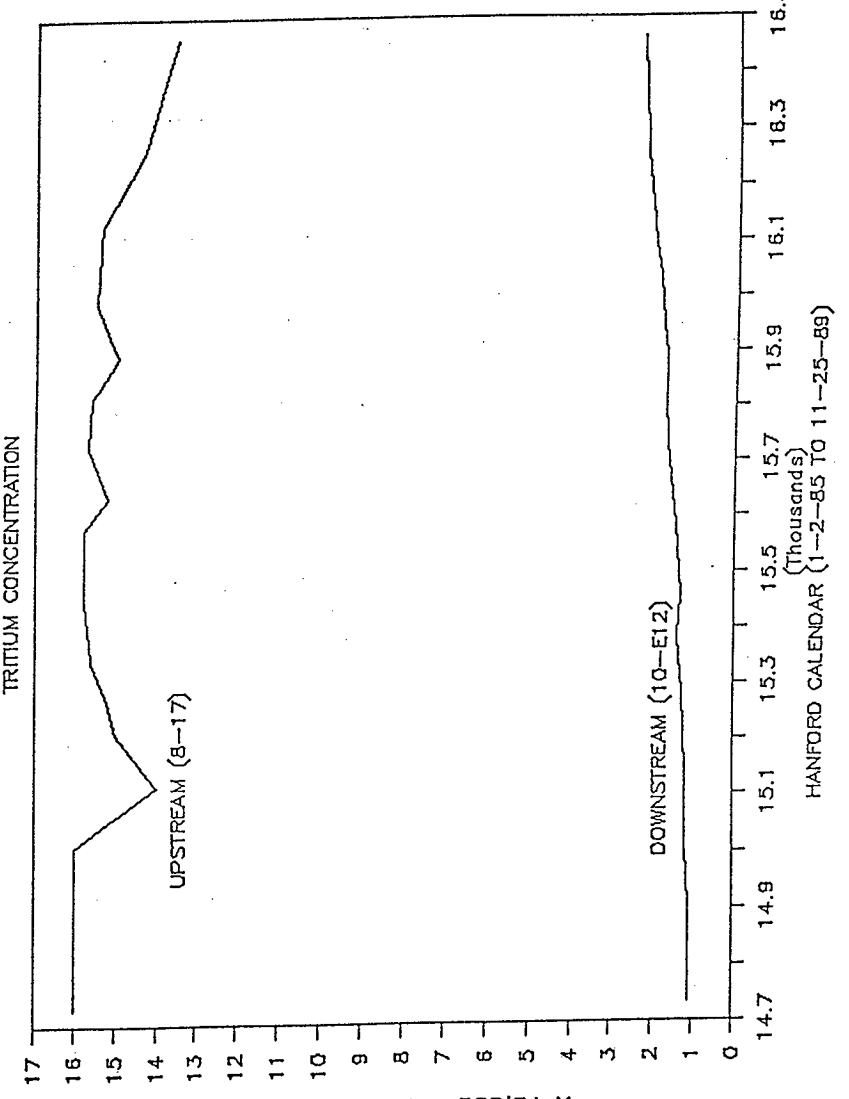

Figure 6-3: 618-11 Burial Site Nitrate Concentration

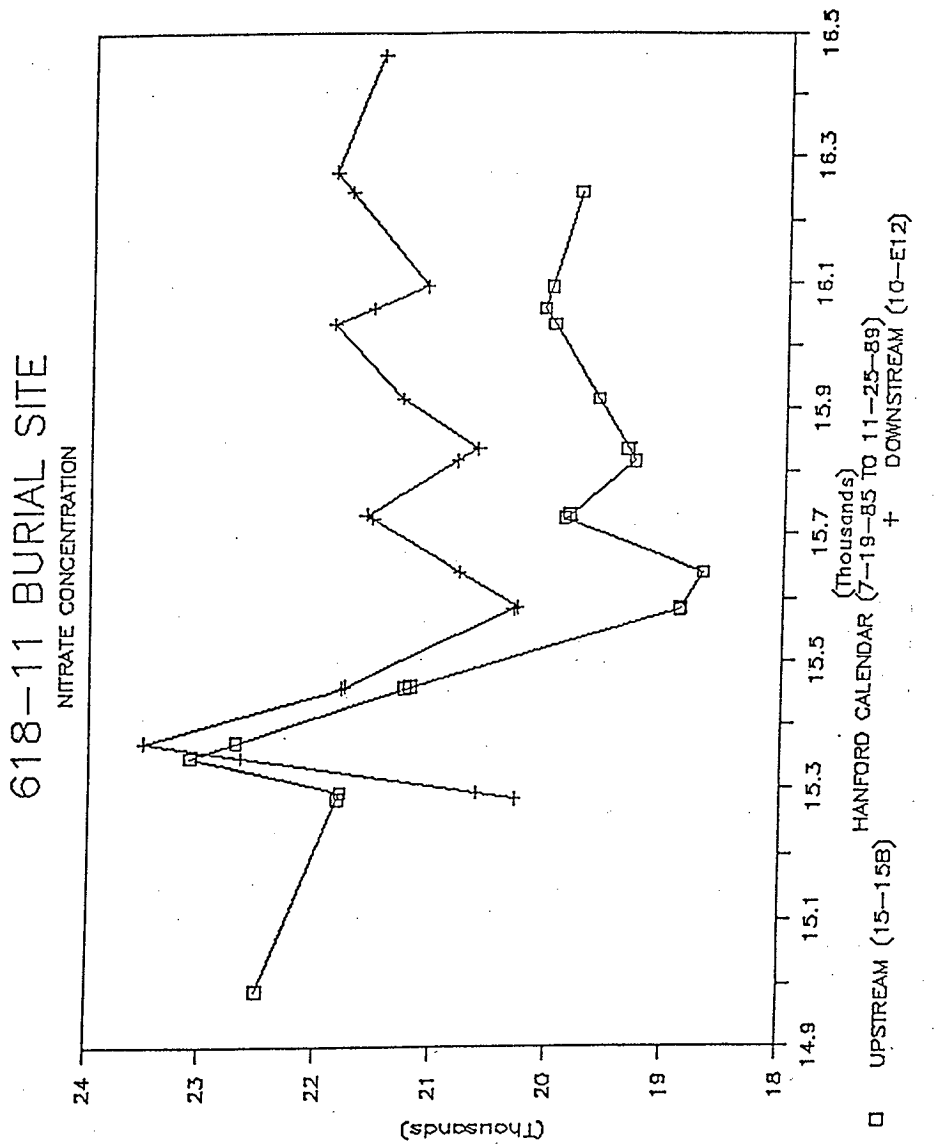

Figure 6-4: 618-11 Burial Site Beta Concentration

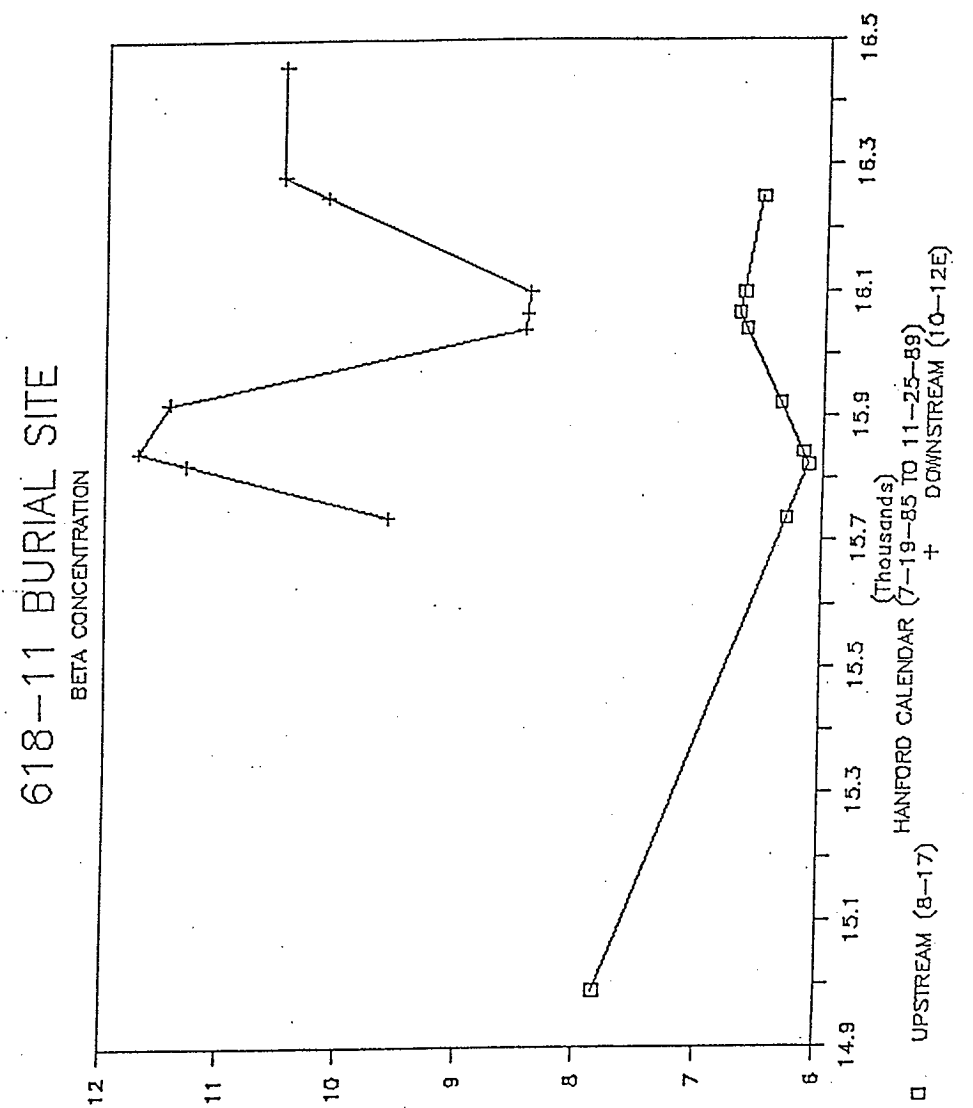

Figure 6-5: 618-11 Burial Site Alpha Concentration

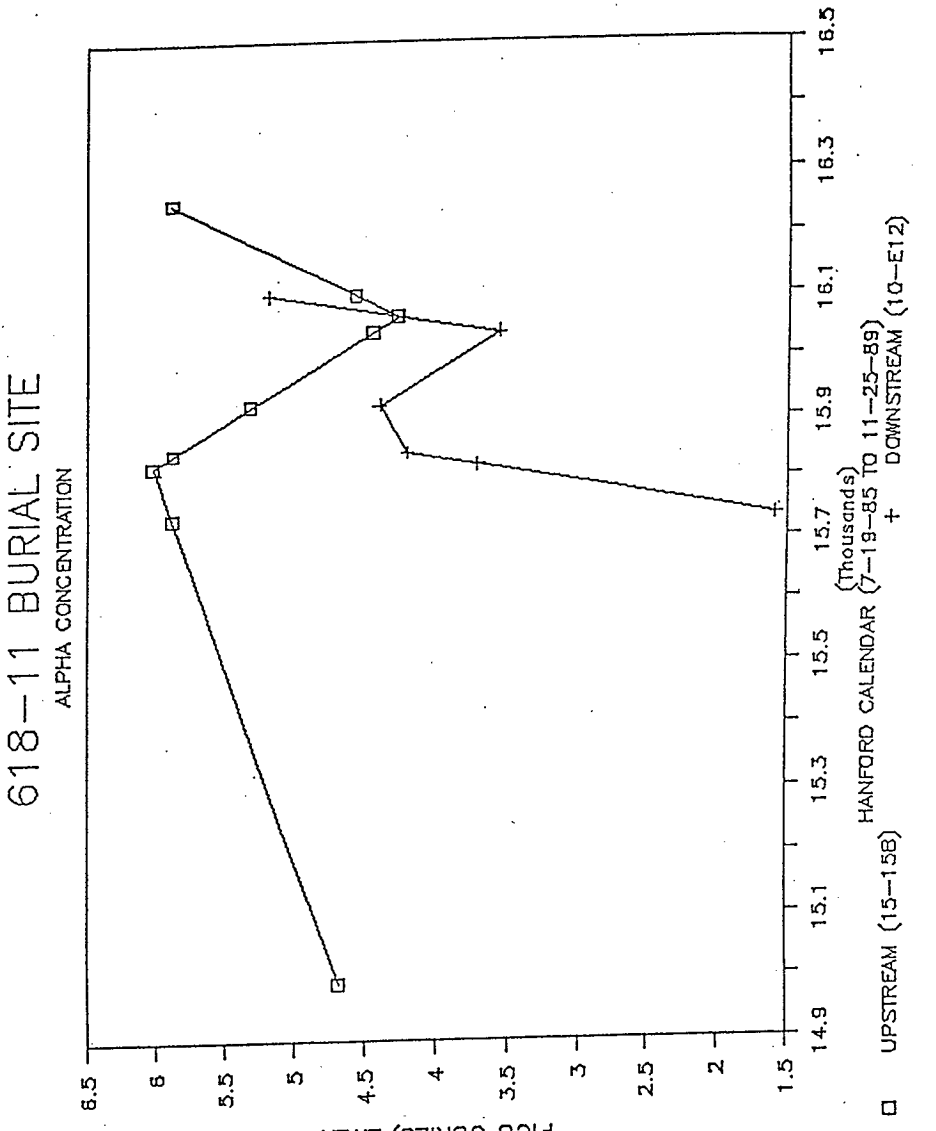

An attempt to characterize the 618-11 site by geophysical means was made in 1978 because, "quantitative evaluation of the migration of radiocontaminants from burial structures would provide information far more useful than site inventory" (Phillips 1980). Phillips reports on core drilling and sampling from four 300 Area burial grounds, including 618-11. The locations of the core drilling and sampling are not given. Therefore, determining whether the sampling was done nearer the caissons, drum storage units, or trenches is not possible. The document states that, "the wells were located to enable drilling beneath the structure where radiocontaminated leachate, if present, would be intercepted, rather than drilling into the structure."

Phillips (1980) reports two sample locations at 9.4 and 8.8 m deep in depth for the 618-11 burial ground. (No indication is given if they are from the same core drill site.) After evaluating the core samples, the document reports gross alpha, gross beta, and other natural occurring radionuclides to be within background range. Phillips indicates Cs^{137} was found at sample location #2 (at the 8.8-m depth) with an activity range of 0.13 ± 0.05 pCi/g. The report indicates that Cs^{137} was found only at the 618-10 and 618-11 burial grounds (Phillips 1980).

In addition, a search was conducted on the Hanford Environmental Information System (HEIS) for information concerning chemical and/or radiological analyses associated with wells within Hanford Plant coordinates N17500, N5500, W6500, and E6500. (Plot Plan H-6-930 lists the approximately northwest corner of 618-11 as N12478, W3562; the southeast corner as N12103, W2562.) The search was concluded on February 4, 1993 and focused on wells listed on Table 6-1. Other wells are known to have existed in the area. All known wells specifically deleted from the search were seismic shot holes with very little possibility of any associated soil and/or groundwater analytical sampling data. The well data provided year of sample, analytical class, and number of results per class. Results of total samples associated with each well are shown in the Table 6-1.

Some of the data are historical, and not validated to current practice. Data may have been gathered for wells not shown, but they are not available in this major database. Well names reflect their location. An explanation of well names and details such as coordinates, casing diameter, drill depth, screen intervals, etc., may be found in McGhan (1989).

The three wells in closest proximity to the 618-11 burial ground are 699-13-1A, 699-13-1B, and 699-13-1C. These wells were sampled for potable water. Wells 1A and 1B are shallow wells (240 and 260 ft respectively), and 1C is a deep well going down into the basalt bedrock. Well 1C is not currently being used because it brings up too much sand.

Table 6-1: HEIS Monitoring Well Data

Well Name	Count	Year
699-11-1A	4	1973
699-12-4B	246	1984-88
699-13-1A	99	1973-81
699-13-1B	85	1973-81
699-13-1C	74	1980-92
699-14-E6P	69	1966-82
699-14-E6Q	83	1967-81
699-14-E6R	60	1967-81
699-14-E6S	62	1967-81
699-14-E6T	101	1966-88
699-17-5	587	1951-92
699-9-E2	571	1958-87

6.3 SITE MONITORING

Sections 4.0 and 5.2 discussed historical site monitoring of the 618-11 burial ground from site closure through stabilization in 1982, and up to present day monitoring activities. Hall (1968) gives the condition of the site shortly following closure, and at least four references attest to numerous contamination release concerns that existed until final site stabilization in 1982. Conklin (1982) provides the monitoring survey data before and after stabilization. Stabilization success is confirmed by a recent site survey showing no detectable contamination above background at the 618-11 site (Borup 1992).

Some recent site monitoring data were generated with the completion of the Ultrasonic Ranging and Data System (USRADS) mapping conducted February 4 through 10, 1993. The USRADS radiological survey results of the 618-11 field survey are given by Wendling (1993). The survey reported the gross gamma radiation detected while walking the site with hand-held backpack-mounted instrumentation. The system automatically logs gross gamma readings at approximately six-inches and three-feet from the soil surface.

The survey was a comprehensive compilation of data points conducted over the 10 grids laid out in the 618-11 burial ground. Each of the 34,321 data points represents two gross gamma radiation readings: counts per minute at six-inches, and dose rate at three-feet. The survey results for dose rate and count rate are given in the 3-D contour (Figures 6-6 and 6-7). The view is looking from the southwest corner.

The results indicate the 618-11 burial ground has no individual data point that exceeds background. (The background was taken at a "low background" site between 100-D/100-DR and the 100-H Areas.) The survey located the highest elevation dose rate and count rates in the

Figure 6-6:

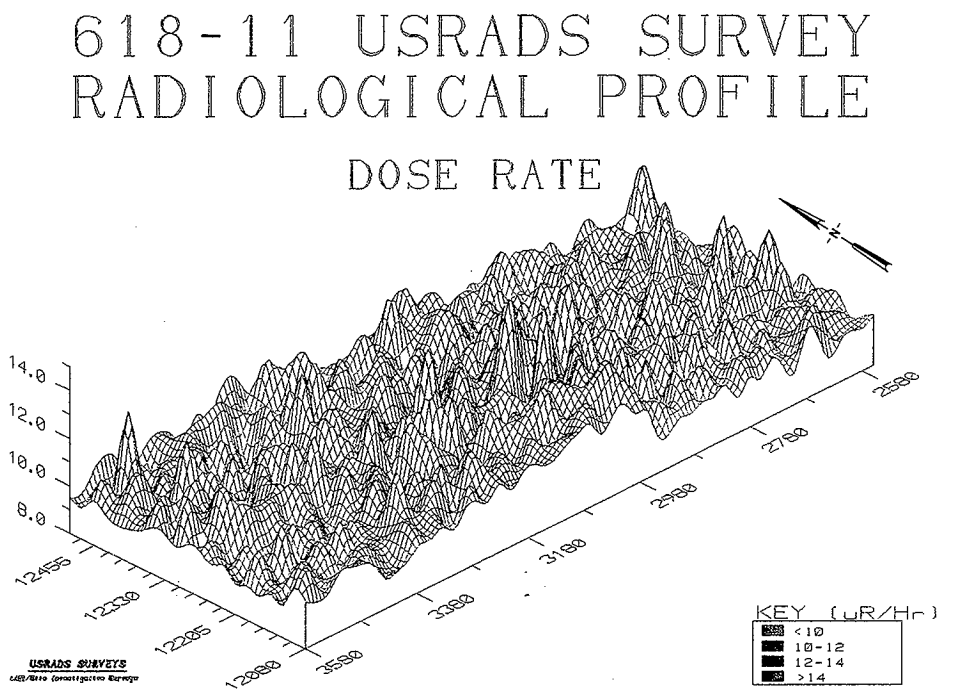
618-11 USRADS SURVEY
RADIOLOGICAL PROFILE
DOSE RATE
14.0
12.0
10.0
8.0
12455
12330
12205
12080
3530
3080
2630
2180
1730
1280
KEY (uR/Hr)
<10
10-12
12-14
>14
USRADS SURVEYS

Figure 6-7:

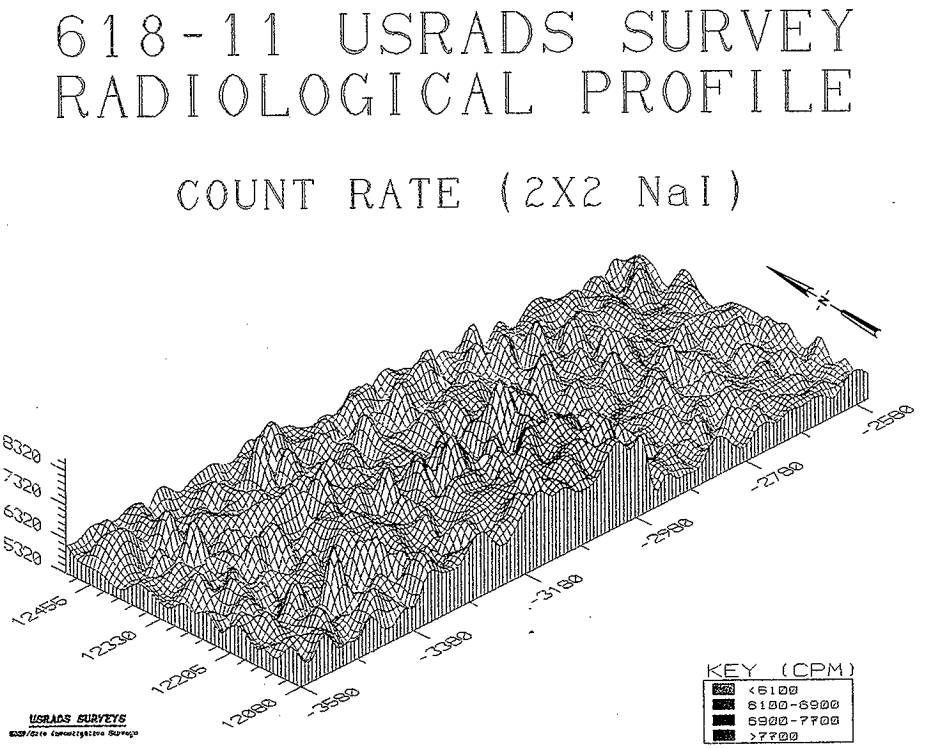
618-11 USRADS SURVEY
RADIOLOGICAL PROFILE
COUNT RATE (2X2 NaI)
8320
7320
6320
5320
12455
12330
12205
12080
-3580
-3380
-3180
-2980
-2780
-2580
KEY (CPM)
<6100
6100-6900
6900-7700
>7700
USRADS SURVEYS

618-11 burial ground, which are along the southern boundary proceeding north to the area of the eight-foot diameter caissons.

The predominate winds blow from the west. With all the backfill and blading of soil and gravel at the site, it is impossible to determine how Figures 6-6 and 6-7 support or negate contamination incidents. The survey does indicate that the final stabilization effort taken in 1982 is still effective.

The most current characterization survey of 618-11 burial ground was the geophysical investigation completed in 1995 (Bergstrom 1997). A geophysical survey of the burial site was conducted using GPR and EMI. Both methods are nonintrusive, environmentally safe, and cost effective. The GPR method uses a transducer to transmit FM frequency radio energy into the ground. Interfaces in the ground reflect back the transmitted energy. The GPR did not provide any new data locating the drum storage units and caissons and correlated well with existing geophysical documentation. The GPR did however confirm that Trench #3 was only partially filled with waste.

EMI investigates the electrical conductivity properties of subsurface soil, rock, and in this study drums, vessels, tanks, and caissons. Figure 2-15 shows the recent EMI results of the 618-11 burial site (Bergstrom 1997). Its data is in complete agreement with site drawing H-6-930. The results confirm that there are 50 drum storage units and five anomalies (caissons) west of the drum storage units along N450. The drum storage units and caissons are visible as contour circles. The fields created by wastes in the trenches are also visible as contour lines. Trench #1 is located along N350, Trench #2 along N250, and Trench #3 along N150.

Caisson location data can be confirmed by additional geophysical investigations. The GPR grid for this investigation was 10 feet. If the site was redone on a two-foot grid, in the area of the caissons, the details of the western five anomalies could be better defined. The tighter grid would determine the number of caissons and the caisson layout along N12,428.24 (Figure 2-11).

7.0 INTERVIEWS

The recent destruction of 618-11 waste shipping manifests and the 300 Area SNM records left a significant information gap in the content of wastes generated and shipped to the 618-11 burial ground during operations in 1962 - 1967. Personal interviews were conducted with active and retired 300 Area facilities employees, who were in any way concerned with solid waste in the mid-1960s. Attention was directed particularly to 325 and 327 building employees, because these two facilities were the primary solid waste generators. The intent of the interviews was to locate written records about burial site practices, shipment information, or other related data. It became apparent only a few employees (past or present) retained much written information. The information obtained from individual files was incomplete for rebuilding the missing waste burial records.

However, some written records were obtained or located through interviews. These records, along with published documents and other preserved engineering records, helped establish the basis of this report. The following types of records were located through interviews:

- Photographs
- Survey records
- Letters
- Excerpts of documents
- Drawings and sketches
- Buried waste tabulations
- Logbook data

Most of the employees whose work was closely connected to the 618-11 burial ground work are now deceased. The majority of those still living, are retired and many have moved from the Tri-City area. Interviews with employees or retirees who possessed no written information were informative and interesting. These interview yielded controversy or another name to interview. Most interviews yielded hearsay or "as I remember it" information. This type of information usually was confusing or difficult to verify or confirm. A list of individuals interviewed who were considered knowledgeable of the 618-11 burial ground and its practices is given in Greenhalgh (1995).

Some Hanford Site records were available from archives in Auburn or Seattle, Washington. These records were reviewed on an individual basis. These records were primarily radiation survey records for the various 300 Area facilities. They have provided some supportive documentation; however, company rules for maintaining or archiving records vary among Hanford contractors. Many records were required to be maintained for only five years. In practice, most records generated in the 1960s were stored for at least 10 years before they were either archived or destroyed. Most of the information needed for complete characterization of the 618-11 burial ground was not preserved. This has limited the burial site characterization.

Other information sources could not be pursued due to time limitations. One area that could still potentially produce some information is the employee laboratory notebooks from 308, 325, 327, and 340 Buildings. These records are listed on the classified card files of the 300 Area Technical Library (PNL) and the notebook documents are either stored or archived. These records could provide some additional data, if they can be located, and reviewed. Most of the formal, letter, and company reports generated by operating personnel in the 1960s have been reviewed.

8.0 RECOMMENDATIONS

Uncertainties or deficiencies concerning the 618-11 burial ground exist for the site itself, the wastes disposed of, and the documentation that describes both.

Documentation concerning the site uncertainties is discussed in Sections 2.4.1 and 2.5. Waste disposal deficiencies are discussed in Section 3.6. The above uncertainties were caused by the length of time since the site was operated, and by the poor collection of historical records having to do with waste burial records. Recommendations are given to increase the confidence level required for site remediation. The recommendations are as follows:

Site

1. Conduct a new GPR scan in the area of the caissons. Use a scan grid of about two feet to provide more detailed data to the exact number, size, and location of the caissons west of the center row of drum storage units.

2. Evaluate new commercially available NDT and/or NDE methods for characterizing the 618-11 burial ground including trenches, drum storage units, and caissons.

3. Improve present radiographic data by inserting a probe sleeve beside selected caissons and drum storage units. This is to inset instrumentation for side-scan X-ray (to get density), gamma count, and possibly provide access for soil and air sampling.

4. Bore into the top of caisson units and insert a video scope to photograph and video the condition of selected caissons. Perform infrared photography and video to ascertain general contents, radiation hot spots; and identify contaminants, such as heat-producing radionuclides like Pu-238.

5. Conduct a gamma count in the caisson selected for the activity in Step 3.

6. Evaluate placing probe sleeves into the trench areas (based on the outcome of Step 2 and conduct exploratory testing suggested in Step 3).

Waste Documentation

7. More documentation exists in the card files, particularly in individual log books that could provide characterization data for the burial ground. This should be done for 1962-67.

The following conclusions were made concerning the 618-11 burial ground:

1. Records indicate that the waste generated in the 4.8 years the 618-11 burial ground was open, contained about five kg of plutonium. A limited amount of low dose rate plutonium waste went to the 200 West burial grounds for disposal from the 308 and 325 buildings. All other 300 Area waste went to the 618-11 burial ground, including most of the waste from the 325 building and some from the 308 building. The estimate derived from data presented in this document is that 618-11 burial ground drum storage units and caissons have waste containing about five kg of plutonium plus other TRU radionuclides including slightly enriched uranium. The trenches also contain hundreds of grams to kilogram quantities of plutonium and other fissile material. The TRU curie content, however, is thought to be primarily due to the plutonium concentration.

2. The presence of five kg of plutonium in the 618-11 burial grounds defines it as a TRU burial ground (>100nCi/g) if no correction is made for the soil overburden. If a correction is made for soil overburden of the trenches, the trenches would be considered non-TRU. The drum storage units and caissons would remain TRU waste.

3. Different records show different burial contents. Combined together, the records give a good indication of the burial ground activity.

4. Burial ground contents include defense plutonium, Pu^{238}, Np^{237}, Am^{241}, uranium, thorium, Pm^{147}, radiostrontium and radiocesium, salt cycle molten salt residues, PRTR test fuel pieces, PUREX and REDOX R&D reprocessing residues, building debris, contaminated casks, lead bricks and shielding, concrete and lead shielded drums, contaminated glassware and columns, contaminated piping, and other equipment including gloveboxes.

5. Categories of waste buried include TRU, non-TRU, contact handled (CH), remote handled (RH), low-level, and mixed-waste. The trenches wastes will contain both CH and RH waste. Much of the waste will also be mixed waste, including hazardous chemicals. An effort will need to be made to segregate hazardous materials. Also, equipment and other larger waste containers will probably have to either be cutup or overpacked. Wastes will have to be certified for disposal to the Waste Isolation Pilot Plant.

9.0 REFERENCES

Atlantic Richfield Hanford Company, 1974, "CP-1068 and CP-1069 Burial Ground Fencing," Letter to Al Prince, J. A. Jones Construction Company, Richland, Washington, February 11, 1974

Backman, G. E., P. C. Jerman, R. E. Roberts, and J. W. Vanderbeek, 1963[a], "Burial of Hanford Radioactive Wastes," HW-77274, General Electric Company, Richland, Washington, April 15, 1963.

Backman, G. E., 1963[b], "Plutonium Contamination Waste Disposal", Memo to E A. Berreth, Hanford Atomic Products Operations, Richland, Washington, September 26, 1963.

Backman, G. E., 1964, "Waste Disposal and Decontamination Monthly Report— September 1964, "General Electric Company, Richland, Washington, October 14, 1964.

Baker, E.G., 1968, "Hanford Waste Disposal Summary 1967", BNWL-793, Battelle Northwest Laboratories, Richland, Washington, May 1968.

Battelle-Northwest Laboratories, 1967, *"Radioactive Waste Disposal*, Pamphlet #17-667-.5, Battelle-Northwest Laboratories for AEC-RL, Richland, Washington.

Benedict, G. E., K. M. Harmon, G. Jansen, L. K. Mudge, and F. A. Scott, 1963, "Production of Reactor Fuel Oxides from Molten Chloride Salt Solution," HW-SA-2915, General Electric Company, Hanford Atomic Products Operation, Richland, Washington, May 15, 1963.

Bergstrom, K. A., Mitchell, T. H., and Bolin, B. J., 1997, "Geophysical Investigations of the 618-10 and 618-11 Burial Grounds, 300-FF-2 Operable Unit," Document No. BHI-00291, Revision 1, Bechtel Hanford Inc., Richland, Washington, September 1997.

Berreth, E. A., 1962, "325 Building Standard Operating Procedures," HW-73112, General Electric Company, Hanford Atomic Products Operation, Richland, Washington. September 15, 1962.

Berreth, E. A., 1963, "Plutonium Waste," Letter to G. E. Backman, General Electric Company, Hanford Laboratories, Richland, Washington, September 24, 1963.

Borup, D. R., 1992, "Survey of 618-11," Radiation Survey Report 73085, Westinghouse Hanford Company, Richland, Washington, July 23, 1992.

Bracken, K. W., 1982, "Surface Stabilization Radiation Readings," U.S. Department of Energy, Richland, Washington, October 8, 1992.

Bradley, J. G. and D. E. Clark, 1978, "Waste Generated During Fabrication of Mixed Oxide Nuclear Fuel," HEDL-TME 78-71, Hanford Engineering Development Laboratory, Richland, Washington, October 1978.

Briggs, F. H., 1982, "A Radiological History of HEDL Laboratories and General 300 Area Environs," Draft Document, Hanford Engineering Development Laboratory, Richland, Washington, September 23, 1982.

Brown, D. J., and R. E. Isaacson, 1977, "The Hanford Environment as Related to Radioactive Waste Burial Grounds and Transuranium Waste Storage Facilities," ARH-ST-155, Atlantic Richfield Hanford Company, Richland, Washington, June 1977.

Cadwell, J. J., 1971, "Waste Management Records on In-Soil-Stored Radioactivity," Letter to T. A. Nemzek, with attachment, "In-Soil-Stored Radioactivity in Areas Assigned to HEDL," Hanford Engineering Development Laboratory, Richland, Washington, July 21, 1971.

Conklin, A. W., 1982, "Radiological Surveys of the 618-11 "Y" Burial Ground," Letter to M. A. Christie, No. 72740-82-ESC-047, Rockwell Hanford Company, Richland, Washington, September 29, 1982.

Cooley, C. R., 1975, "Commercial Alpha Waste Program Quarterly Progress Report, January - March 1975," HEDL-TME 75-87, Hanford Engineering Development Laboratory, Richland, Washington, October 1975.

Coony, F. M., 1985 "Hanford Defense Waste Environmental Impact Statement Engineering Data Package: Transuranic Pre-1970 Buried Solid Waste Sites," SD-WM-DP-008, Rockwell Hanford Operations, Richland, Washington, August 1985.

Corley, J. P., 1967, "New Silos For High Level Solid Waste," Memo to P. F. X. Dunnigan, Battelle-Northwest Laboratories, Richland, Washington, June 19, 1967.

Corley, J. P., 1968, "Wye Burial Ground," Memo to W. C. Horton, Battelle-Northwest Laboratories, Richland, Washington, March 12, 1968.

Craddock, L. E., and Gruber, W. J., 1975, "Reduction of Postirradiation Testing Transuranic Waste," Letter to R. B. Hall, Hanford Engineering Development Laboratory, Richland, Washington, February 18, 1975.

DOE/EIS-0113F, 1987, "*Final Environmental Impact Statement, Disposal of Hanford Defense High-Level, Transuranic and Tank Wastes, Hanford Site, Richland, Washington*," Volume 2, July 1987.

Duncan, D. R., D. A. Burbank, B. C. Anderson, and J. A. Demiter, 1992, "Application of Service Examinations to Transuranic Waste Container Integrity at the Hanford Site," WHC-SA-1450-FP, Westinghouse Hanford Company, Richland, Washington, October 1992.

Geiger, J. F., 1977, "Assessment of Hanford Burial Grounds and Interim TRU Storage," RHO-CD-78, Rockwell Hanford Operations, Richland, Washington, August 1977.

General Electric Company, 1962-1964, "Hanford Laboratories Operation Monthly Activity Reports," Hanford Atomic Products Operation, Richland, Washington, March 1962 - December 1964.

Gerber, M. S., 1992, "Past Practices Technical Characterization Study-300 Area-Hanford Site," DOE/RL-92-39, Westinghouse Hanford Company, Richland, Washington, December 1992.

Gift, R. E., "Shipping Casks," HW-76192, General Electric Company, Hanford Atomic Products Operation, Richland, Washington, undated.

Graybeal, R., 1964, "Waste Burial Facility Wye Burial Ground," soil loading calculation and caisson design drawings, January 10, 1964.

Greenhalgh, W. O., 1986, "Technical Studies for the Processing and Disposal of High-Activity TRU Waste, TRU Caisson Waste," HEDL-TC-2861, Hanford Engineering Development Laboratory, Richland, Washington, September 1986.

Greenhalgh, W. O. and J. A. Demiter, 1995, "Letter Report on 618-11 Personnel Interviews," Internal Memo 95105W0G, Westinghouse Hanford Company, Richland, Washington. March 15, 1995.

Hall, R. B., 1967, "300 Wye Burial Ground," Memo to P. F. X. Dunnigan, Battelle Northwest Laboratory, Richland, Washington, July 31, 1967.

Hall, R. B., 1968, "300 North and 300 Wye Burial Grounds," Memo to L. M. Ostby with Attached Environmental Monitoring Trip Log, Battelle Northwest Laboratory, Richland, Washington, September 16, 1968.

Hall, R. B., 1969, "Hanford Waste Disposal Summary - 1968," BNWL-1081, Battelle Northwest Laboratory, Richland, Washington, May 1969.

HEDL, 1983, "HEDL Postirradiation Examination Capabilities," HEDL-7371, Hanford Engineering Development Laboratory, Richland, Washington, July 1983.

J. A. Jones Construction Company, 1974, "Work Acceptance Form," JAJ-767, Installation of Burial Ground Fencing, J. A. Jones Construction Company, Richland, Washington, July 25, 1974.

Keene, A. R., 1961, "Burial of Solid Wastes in the Vicinity of the 300 Area," Letter to A. J. Stevens, General Electric Company, Hanford Laboratories Operation, Richland, Washington, February 3, 1961.

Keene, A. R., 1963, "Disposal of Wastes Containing Long-lived Radioactive Materials," Memo to F. W. Albaugh, et al., General Electric Company, Hanford Laboratories Operation, Richland, Washington, October 24, 1963.

Kibbe, D. R., 1992, "Subsidence Assessment," Letter to J. M. Nielsen, et. al, No. 87320-92-007, Westinghouse Hanford Company, Richland, Washington, February 19, 1992.

Lust, L. F. and J. W. Davison, 1976, *Waste Management Manual*, TMT-3, Hanford Engineering Development Laboratory, Richland, Washington, July 1976.

Maxfield, H. L., 1973, "Weekly Check of 300 Area Burial Grounds," Survey No. 11-423, November 28, 1973.

Maxfield, H. L., 1974[a],"Weekly Check of 300 Area Burial Grounds," Survey No. 11-463, January 24, 1974.

Maxfield, H. L., 1974[b], "Weekly Check of 300 Area Burial Grounds," Survey No. 11-488, March 1, 1974.

Maxfield, H. L., 1974[c], "Weekly Check of 300 Area Burial Grounds," September 4, 1974.

McCormack, C. G., 1962, "Radioactive Waste Handling at the Hanford Laboratories Radiometallurgy Facility," HW-72103, General Electric Company, Hanford Laboratories Operation, Richland, Washington, January 16, 1962.

McGhan, V. L., 1989, "Hanford Wells," PNL-6907/UC-11, Pacific Northwest Laboratories, Richland, Washington, June 1989.

McGuire, H. E., 1988, "Hanford Site Implementation Plan For The Hanford Defense Waste Environmental Impact Statement Record of Decision," Letter 8851315, Westinghouse Hanford Company, Richland, Washington, February 22, 1988.

Parks, D. L., 1966, "*Low Level Solid Waste Disposal Study for Hanford 200 Areas*," ISO-169, Isochem, Inc., Richland, Washington, March 15, 1966.

Pauly, T. R., 1990, "*Engineering Study for Waste Receiving and Processing (WRAP) Facility, Module 2*," WHC-SD-W100-ES-001, Rev. 0, Westinghouse Hanford Company, Richland, Washington, March 28, 1990.

Phillips, S. J., A. E. Reiseauer, W. H. Rickard, G. A Sandness, 1977, "Initial Site Characterization and Evaluation of Radionuclide Contaminated Solid Waste Burial Grounds," BNWL- 2184/UC-70, Pacific Northwest Laboratories, Richland, Washington, February 1977.

Phillips, S. J., L. L. Ames, R. E. Fitzner, G. W. Gee, G. A. Sandness, and C. S. Simmons, 1980, "Characterization of the Hanford 300 Area Burial Grounds," PNL-2557 UC-70, Pacific Northwest Laboratories, Richland, Washington, January 1980.

Phillips, S. J., D. D. Fischer, R. C. Crawford, J. L. Rising, 1982, "Engineering Assessment of Low-Level Liquid Waste Disposal Caisson Locations at the 618-11 Burial Ground," WHC-MR-0400, Westinghouse Hanford Company, Richland, Washington, June 1982.

Saueressig, B. J., 1981, "Wye Burial Ground (#318-11)," Letter to J. L. Deichman, No. 72340-81-045, Rockwell Hanford Company, Richland, Washington, June 9, 1981.

Shirley, G. C., 1981, 1980, "Theoretical Stresses on Buried Waste Containers," WHC-SD-WM-TI-062, Rockwell Hanford Company, Richland, Washington, September 8, 1980.

Smith, F. M., 1965, "Nuclear Safety Specifications as Applied to Dry Storage," Nuclear Safety Specification No. H-1, 327 Building, Battelle-Northwest Laboratories, Richland, Washington, August 18, 1965.

Stevens, A. J., 1963, Untitled Memo to G. E. Backman, General Electric Company, Hanford Laboratories, Richland, Washington, October 23, 1963.

Voiland, E. E., 1970, "Waste Burial Ground Data Pacific Northwest Laboratory Sites," Letter to F. S. Zvonar, Battelle-Northwest Laboratories, Richland, Washington, February 2, 1970.

Wendling, M. A., 1993, "618-11 Burial Ground USRADS Radiological Surveys," Westinghouse Hanford Company, Richland, Washington, February 1993.

Westinghouse Hanford Company, 1983, "1983 Site Assessment," WHC-SD-PRS-004, 1983, Rev. Letter 0-0, Page A-27.

Wittenbrock, N. G., P. C. Walkup, and J. K. Anderson, 1959, "Plutonium Recycle Test Reactor Final Safeguards Analysis," HW-61236, General Electric Company, Richland, Washington, October 1, 1959.

Wittenbrock, N. G., 1967, "Plutonium Handling Safety in the Plutonium Recycle Program," BNWL-SA-1345, Battelle-Northwest Laboratories, Richland, Washington, July 3, 1967.

APPENDIX A

WASTE SHIPPED FROM THE 325-A CELLS 1961-1967
(EXTRACTED FROM PNL 325-A SHIFT LOGBOOKS)

APPENDIX-A

WASTE SHIPPED FROM 325-A HOT CELLS, 1961-1967 (EXTRACTED FROM PNL 325-A SHIFT LOGBOOKS)

The 325-A hot cell started up hot in June 30, 1960 with 1WW feed solution in B-cell, and solid waste was removed from the cells starting April 5, 1961.

1961

04/06/61	Work in A-cell with PUREX Sr 90. Removed (2) 55-gallon drums of solid waste. Each 55-gallon drum will only contain 3 one-gallon cans. Most of the cans will contain: crushed glass, rags, paper, metal, and plastic.
04/07/61	(2) 1" lead-lined 55-gallon drums from A and B cells.
04/11/61	3 waste boxes with plastic, rags, paper, tubing, one box reading 1R/hr.
06/02/61	4 waste boxes waste from A-cell, manipulator boots, polytubing, 1 gal. cans of waste, one reading 500 mr/hr, and one reading 3.5R/hr.
06/20/61	Waste from A and B cells into (1) 1" 55-gallon and (1) 2" 55-gallon drum.
09/11/61	B-cell waste 2 - 2" lead 55-gallon and 3 - 1" lead 55-gallon drums. Glass filters, sample vials, rags, and metal. 1WW wash.
10/06/61	(4) culvert 55-gallon drums from A-cell.
10/09/61	9 CWS filters were removed from cell exhaust.
10/26/61	1 small glove box in wood box, Photo. 061541-1.
11/01/61	A-cell waste (2) culvert 55-gallon and (1) 1" lead drums (Sr^{90}).
11/11/61	B-cell waste (2) 1" lead and (3) 2" lead 55-gallon drums.
11/28/61	C-cell waste (2) 1" lead inserts 55-gallon drums.
12/20/61	A-cell waste (1) 55-gallon drum reading 2R/hr though side.
12/22/61	A-cell waste (1) 55-gallon drum: Tc, Pm, Sr, and Am.

1962

01/09/62	B-cell waste (3) 1" lead 55-gallon drums.
01/12/62	B-cell CWS filter.
01/24/62	(1) culvert 55-gallon drum from C-cell.

02/20/62	A-cell waste (3) culvert 55-gallon drums (sample vials, glass, rags).
02/21/62	A-cell waste SST tubing, fitting, valves. (1) 55-gallon drum.
02/23/62	A-cell waste (1) 1" lead drum and (2) culvert drums.
02/26/62	A-cell waste (1) 1" lead drum and (1) culvert drum.
03/1/62	A-cell (1) 15-gallon Black iron can.
03/14/62	B-cell CWS filter Sr^{90}.
03/22/62	A-cell (1) 55-gallon drum containing SST items and lead brick.
03/23/62	A-cell TK-7 and (1) 55-gallon drum with SST items.
03/28/62	A-cell shipped (3) boxes containing glass pipes 4"OD x 9'L and (2) 55-gallon drums of small metal parts, valves and tubing.
03/29/62	(3) box containing glass pipes. 6"OD x 9'long and (1) 4' x 4' x 8' box metal rakes, tanks, tubing, and (2) 55-gallon drums of junk.
04/02/62	(2) 4' x 4' x 8' wood boxes of metal equipment, (2) 30-gallon drums with lead and (3) 5-gallon buckets with lead.
04/04/62	(11) wood boxes 8" x 20" x 28" with lead bricks.
04/06/62	(3) 20-gallon tanks and (6) boxes of lead.
04/10/62	(8) boxes of lead bricks and (1) 55-gallon drum (1) wood box of junk 30" x 30" x 35".
05/21/62	(3) culvert drums of waste from B-cell, glass, rags, plastic. The work was with 1WW feed from PUREX process.
09/04/62	Sent (14) C.W.S. filters to burial ground. Three of them were from B-cell reading 60R/hr, 40R/hr, and 80R/hr (Sr^{90}).
09/24/62	(1) 55-gallon drum with 1" lead lined (UO_2, PuO_2 works in C-cell).
10/03/62	(1) A-cell C.W.S. filter, (1WW spray calciner work).
10/09/62	(1) A-cell C.W.S. filter.
10/25/62	C-cell waste (1) 1" lead, (1) culvert 55-gallon drum (4R/hr at bottom of drum) and three 5-gallon buckets.
10/26/62	(1) A-cell C.W.S. filter.
10/29/62	A-cell C.W.S. filter (60R/hr).
10/31/62	A-cell C.W.S. filter.

11/01/62 C-cell (2) 1" lead drums and (2) culvert 55-gallon drums containing SST valves, fittings, tubing, glass, and plastic.

11/02/62 C-cell waste (3) culvert 55-gallon drums (UO_2, PuO_2 work).

11/2-5/62 (2) C.M.S. filters from A-cell (one at 70R/hr and one at 100R/hr).

11/05/62 (2) 1" lead drums from C-cell waste.

11/07/62 A-cell C.W.S. filter.

11/29/62 C-cell equipment removal (1) 4' x 4' x 8' wood box and (2) 55-gallon drums.

12/03/62 C-cell (1) 4' x 4' x 8' wood box and (1) 55-gallon drum.

12/05/62 A-cell C.W.S. filter reading 400R/hr.

12/12/62 Removed (4) waste cartons from room 603 reading up to 4 R/hr.

1963

01/14/63 (2) culvert 55-gallon drum from A-cell.

01/25/63 B-cell (2) 1" lead 55-gallon drums.

02/08/63 C-cell (2) culvert 55-gallon drums.
B-cell (2) 1" lead and (2) 2" lead drums.

02/11/63 (3) culvert and (3) 1" lead 55-gallon drums (A-cell 1WW waste)
(3) C.W.S. filters, 2 from A-cell, 1 from B-cell.

02/12/63 (2) culvert drums from A-cell.

02/13/63 (1) culvert drum from A-cell and (1) 1" lead drum.

02/15/63 We received 50,000 curies of Sr^{90}, put into B-cell.

03/26/63 (2) culverts C-cell and (1) culvert A-cell (Pm in C-cell).

04/18/63 Removed equipment from C-cell Pm contaminated put in a 3' x 3' x 6' wood box.

04/19/63 Removed 7 C.W.S. filters from cells exhaust.

04/23/63 Removed all equipment from C-cell (Pm work): glass pipes, tanks, trays, tables, tubing, valves. Put into 3 boxes 4' x 4' x 8'.

05/01/63 B-cell waste (1) 2" lead, (1) culvert 55-gallon drum.

05/02/63 A-cell (1) 1" lead, (1) culvert 55-gallon drum, 3" lined 55-gallon drum contains (2) 8" x 8" x 6" C.W.S. filters from calciner off gas and vacuum lines and other material.

05/07/63 (2) 1" lead lined 55-gallon drums, contains SST tubing, valves plastic, (1) 2" lead lined 55-gallon drum contains C.W.S. filter from B-cell vacuum system (8" x 8" x 6").

06/20/63 A-cell C.W.S. filter (exhaust).

07/15/63 A-cell (2) culvert 55-gallon drums, containing sample bottles, rags, metal, and plastics.

08/13/63 B-cell waste (3) 1" lead and (1) 2" lead 55-gallon drums of waste: glass sample vials, bottles, rags, and plastic.

09/06/63 A-cell C.W.S. filter.

10/16/63 A-cell (3) 1" lead, (3) culverts, and (1) 2" lead 55-gallon drums.

10/23/63 A-cell C.W.S. filter.

11/04/63 A-cell C.W.S. filter reading 30R/hr.

11/15/63 A-cell (2) 1" lead, (1) 2" lead, (3) culvert 55-gallon drums.

11/22/63 A-cell (2) C.W.S. filters, reading on one was 2.7R/hr and the other 22R/hr. They were put into load lugger, then to burial ground.

11/27/63 C-cell Pu waste in one-gallon cans put in waste box.

12/02/63 A-cell C.W.S. filter reading 1R/hr.

12/03/63 A-cell C.W.S. filters reading 3R/hr and 5R/hr.

12/12/63 A-cell C.W.S. filters reading 1WW spray calciner work.

12/16/63 A-cell C.W.S. filters.

12/17/63 A-cell C.W.S. filters reading 70R/hr.

12/20/63 A-cell C.W.S. filters.

12/23/63 A-cell C.W.S. filters.

1964

01/03/64 Pulled 10 C.W.S. filter.

01/03/64 (6) one-gallon cans from A-cell, using the new 1 ton cask.

01/08/64 (3) one-gallon cans C-cell, Pu waste.

01/09/64 (6) one-gallon cans C-cell.

02/04/64 (11) one-gallon cans from A and B cells.

02/28/64 A-cell C.W.S. filter.

03/06/64 B-cell waste into 15-gallon black iron can using the new 7 ton waste cask.

03/11/64 C-cell (1) 15-gallon can (Pu, UO_2, work).

03/16/64 A-cell C.W.S. filter (150R/hr).

03/18/64 C-cell two 15-gallon cans waste.

03/19/64 A-cell (6) one-gallon cans.

03/26/64 C-cell one 15-gallon can and (6) one-gallon cans.

03/31/64 A and B cell, (12) one-gallon cans.

04/14/64 C-cell (3) one-gallon and (1) 15-gallon cans.

04/15/64 A-cell C.W.S. filter.

04/30/64 C-cell (1) 15-gallon can.

05/04/64 C-cell C.W.S. filter (UO_2).

05/28/64 A-cell (9) one-gallon cans (Sr^{90}, Ce).

06/02/64 C.W.S. filters from A, B, and C cells (3).

06/03/64 Waste from A, B, and C cells (12) one-gallon cans.

06/11/64 C-cell C.W.S. filter (UO_2 dust) changed out the C.W.S. filter on C for the second time (2 filters), one reading 80R/hr. Changed C.W.S. filters on A and B cells (2 filters), one reading 90R/hr.

06/12/64 C-cell C.W.S. filter (reading 80R/hr) decladding fuel rods.

06/15/64 (8) C.W.S. filters changed out.

06/19/64 (2) A and B cell filter changed out.

06/22/64 A-cell waste (6) one-gallon cans and (2) 15-gallon container with calcined 1WW from PUREX.

06/23/69 (12) one-gallon cans and 4 containers with calcined pots of 1WW waste.

06/23/64 C-cell C.W.S. filter change.

06/24/64 A-cell (2) calciner pots and (6) one-gallon cans.

06/25/64 A-cell (4) calciner pots.

06/26/64 (2) C.W.S. filters from B and C cell.

06/29/64 A-cell waste (2) 15-gallon cans.

06/30/64 A-cell (2) 5-gallon buckets and (1) 15-gallon can.

07/10/64 C-cell C.W.S. filters.

07/14/64 (2) 5-gallon cans from A-cell and (2) 5-gallon cans from C-cell contain carbon electrodes from Pu work.

07/15/64 A-cell (8) one-gallon cans.

07/21/64 C-cell C.W.S. filters.

07/30/64 (2) 5-gallon cans A-cell, (2) 5-gallon cans B-cell, (3) one-gallon cans C-cell.

07/31/64 C-cell C.W.S. filter.

08/14/64 C-cell C.W.S. filter (Pu, Uo_2).

08/17/64 C-cell (4) 5-gallon cans.

09/03/64 C-cell (2) 5-gallon cans, B-cell (2) 5-gallon cans.

09/09/64 (2) C.W.S. filters.

09/10/64 (2) 5-gallon cans A-cell, (2) 5-gallon cans from B-cell, and (2) 5-gallon cans from C-cell.

09/21/64 A and C-cell C.W.S. filters.

09/22/64 B-cell C.W.S. filter (thorium work in cell).

10/06/64 C-cell (4) 5-gallon cans and (6) one-gallon cans.

10/07/64 A and B cell C.W.S. filters (2).

10/08/64 B-cell (2) 5-gallon cans and (3) one-gallon.

10/15/64 A and C cell C.W.S. filters (2).

10/22/64 B and C cell C.W.S. filters (2).

11/01/64 Solution came out under C-cell door it was cleaned up with absorbent and rags. Put waste into (4) waste boxes, they were reading (4R/hr).

11/04/64 C-cell C.W.S. filters (2).

11/05/64 C-cell C.W.S. filter (1). (6) one-gallon and (4) 5-gallon cans.

11/9-30/64 There were (12) C.W.S. filter change outs on the fuel decladding operation in C-cell.

12/02/64 (2) 5-gallon cans from B-cell, (1) 15-gallon and (6) one-gallon from C-cell.

12/03/64 (2) 5-gallon cans B-cell and (1) 15-gallon can C-cell.

12/14/64 (5) C.W.S. filters from C-cell work.

1965

01/05/65 A-cell (2) 5-gallon cans.

01/06/65 A and B-cell (6) 5-gallon cans.

01/08/65 Changed out all C.W.S. filters, (10) in all.

01/12/65 - 02/25/65 Starting A-cell clean out of the spray calciner equipment. There were (37) 15-gallon containers with cut up SST items, calciner, rakes, valves, pumps, air motors, 8" x 8" x 6" C.W.S. filters, and calcined 1WW pots.

03/02/65 C-cell C.W.S. filter (2).

03/04/65 C-cell C.W.S. filter (1) reading 70R/hr.

03/09/65 Several 30-gallon drums containing lead bricks from A-cell.

03/10/65 (8) C.W.S. filters.

03/10/65 - 04/01/65 (17) wood boxes 4' x 4' x 8' containing tanks, trays, dunnage, and insulation

03/31/65 (3) C.W.S. filters.

04/06/65 (1) C.W.S. filter C-cell.

04/12/65 (2) one-gallon cans C-cell.

04/14-30/65 (6) 15-gallon cans and (3) one-gallon cans B-cell.

05/05/65 (1) C.W.S. filter C-cell.

05/11/65 (2) 2' x 3' x 4' wood boxes of B-cell equipment: large press, one oven and one tube furnace.

05/25/65 (1) C.W.S.filter C-cell.

06/16/65 (4) 5-gallon cans from C-cell Pu, UO_2 work.

06/23/65 (2) C.W.S. filters C-cell.

07/22/65 - 10/21/65 (50) 15-gallon Black iron cans containing C-cell equipment removed: glass, stainless steel valves, tubing, rakes, condensers, small tanks, pumps, rotometers, and (4) C.W.S. filters.

10/27/65 (6) 5-gallon buckets from B-cell.

11/03/65 (6) wood boxes 4' x 4' x 8' containing large tanks, trays, tubing, tools, skill saw, and wrenches.

11/10/65 (1) C.W.S. filter C-cell.

11/22/65 (2) 5-gallon cans from B-cell.

11/24/65 (2) 4' x 4' x 8' wood boxes containing the C-cell crane and parts, and miscellaneous junk.

12/09/65 (3) C.W.S. filter.

12/13/65 (2) 5-gallon cans B-cell.

1966

03/07/66 (1) 5-gallon can C-cell Pm^{147} oxide work.

03/14/66 (2) 15-gallon SST resin cans from A-cell Pm^{147}.

03/15/66 (4) 5-gallon cans B-cell.

03/29/66 (2) 5-gallon cans and (1) 15-gallon can from A-cell.

03/30/66 (3) 15-gallon cans into (1) large container A-cell.

04/12/66 (4) 5-gallon cans from A-cell Pm work.

04/15/66 (1) 4x4x8 foot wood box with trays, press, and stands from Pm work.

05/11/65 (3) C.W.S. filters.

05/20/66 (2) 5-gallon cans and (1) 15-gallon resin can from Pm work.

06/03/66 (3) C.W.S. filters.

06/20/66 (6) 5-gallon cans glass, poly tubing, valves, rags, and plastic.

06/21/66 (4) 15-gallon Black iron cans. A-cell waste.

08/30/66 (4) 5-gallon cans.

09/15/66 (4) 15-gallon SST resin cans.

09/16/66 (2) 15-gallon Black Iron cans.

09/27/66 (4) 5-gallon cans.

09/28/66 (4) 5-gallon cans from A-cell.

11/02/66 (6) 5-gallon cans B-cell Sr^{90}, Ce, Cs.

11/14/66 (4) 40-gallon tanks from room 40A.

11/23/66 (4) 15-gallon resin cans from A-cell.

12/13/66 (6) 5-gallon cans from C-cell Np (Neptunium) work.

1967

01/06/67	(3) C.W.S. filters reading 500R/hr.
01/13/67	(2) 5-gallon cans from B-cell and (4) 5-gallon cans from A-cell.
02/08/67	(2) 5-gallon cans from C-cell and (4) 5-gallon cans from B-cell.
02/09/67	(10) C.W.S. filters.
02/17/67	(2) 5-gallon cans and (1) 15-gallon resin can.
03/17/67	(4) 5-gallon cans and (1) 15-gallon resin can.
03/20/67	(4) 5-gallon cans from A-cell Pr work.
03/21/67	(1) C.W.S. filter from B-cell Np work.
03/27/67	(2) C.W.S. filters from C-cell and one C.W.S. filter with charcoal for iodine.
03/31/67	(7) 15-gallon resin cans from A-cell Pm work.
04/03/67	(3) 15-gallon Black Iron cans.
04/7-11/67	(18) 5-gallon cans C-cell.
04/19/67	(2) 5-gallon cans from B-cell Np work and (1) 15-gallon A-cell Pm waste can.
05/04/67	(2) wood boxes containing glass pipe, 16" OD x 9', and 8" OD x 9' long.
05/05/67	(2) 5-gallon glass containers with resin and 55-gallon drum with absorbing compound and vacuum pump oil.
06/13/67	(14) 5-gallon cans B and C cells.
06/28/67	Waste cartons that contained rags with Pu^{238}, wipes from spill in room 603.
07/06/67	(9) C.W.S. filters.
07/20/67	(6) 5-gallon cans from C-cell.
07/24/67	(6) 5-gallon cans from B-cell.
07/26/67	(1) 4' x 4' x 8' wood box contains lumber, plastic, and rags.
08/09/67	(4) 5-gallon cans from B and C cell.
08/18/67	(3) C.W.S. filters vault exhaust reading 1.5R/hr, 9R/hr, and 4R/hr.
09/13/67	(8) 15-gallon resin cans and (2) 5-gallon cans from A-cell.
09/14/67	(8) 5-gallon cans from Pm work.

09/15/67 (6) 5-gallon cans from Pu work.

10/18/67 (6) 5-gallon cans from A-cell Pm and (1) 15-gallon resin can.

10/19/67 (8) 5-gallon cans from A-cell.

10/26/67 (8) 5-gallon cans from C-cell.

11/03/67 (3) 4' x 4' x 8' wood boxes, equipment from A-cell: glass column, metal, wood, and plastic.

11/17/67 (1) 4' x 4' x 8' wood box contains $^{3}/_{4}$" plywood used as shielding, lead, plastic, rags, and 2" x 4"s.

11/20/67 (4) 5-gallon cans from C-cell.

11/21/67 (3) 15-gallon resin cans from A-cell and (2) 5-gallon cans from C-cell.

11/22/67 (2) 5-gallon cans from C-cell.

12/12/67 (3) 15-gallon resin cans from A-cell.

12/14/67 (6) 5-gallon cans from A-cell.

12/22/67 (3) 15-gallon resin cans.

12/27/67 (12) 5-gallon cans from A-cell and (one) resin can.

12/29/67 (4) 5-gallon cans from B and C cells.

APPENDIX B

DRAWING H-3-9951, "PLOT PLAN 300 WYE BURIAL GROUND"
Revisions 2-7

DRAWING H-6-930, "PLOT PLAN 300 WYE BURIAL GROUND"
Rev. 0

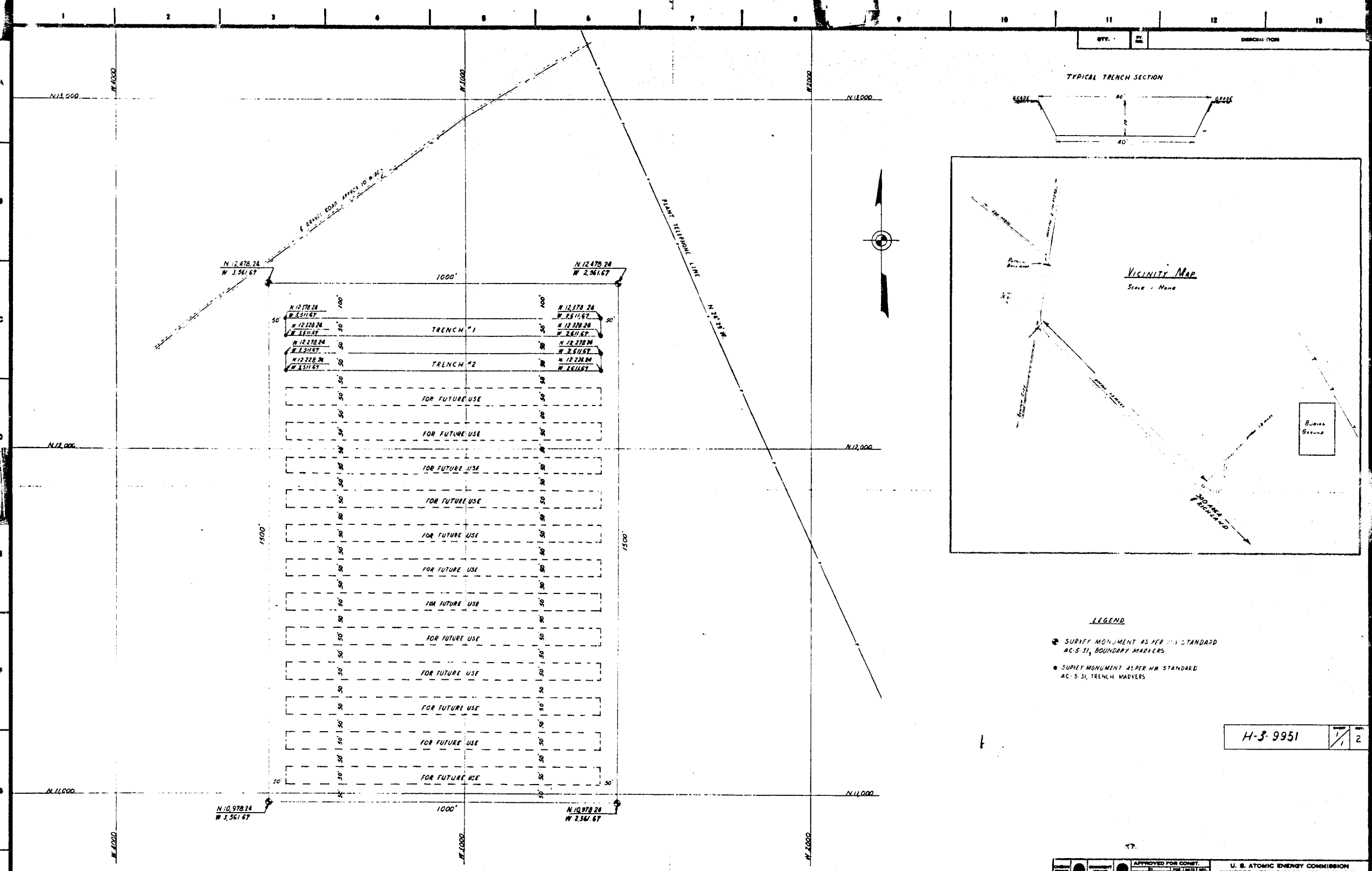

CHANGED TITLE					
CHANGED ORIENTATION					
REVISIONS					

REFERENCE DRAWINGS

NEXT USED ON

APPROVED FOR CONST.

APPROVED FOR PURCHASE

APPROVED FOR DESIGN

SCALE 1" = 100'

U. S. ATOMIC ENERGY COMMISSION
HANFORD ATOMIC PRODUCTS OPERATION
GENERAL ELECTRIC

PLOT PLAN
300 WYE
BURIAL GROUND

300 G | 0401

NONE

H-3-9951 | 1 | 1

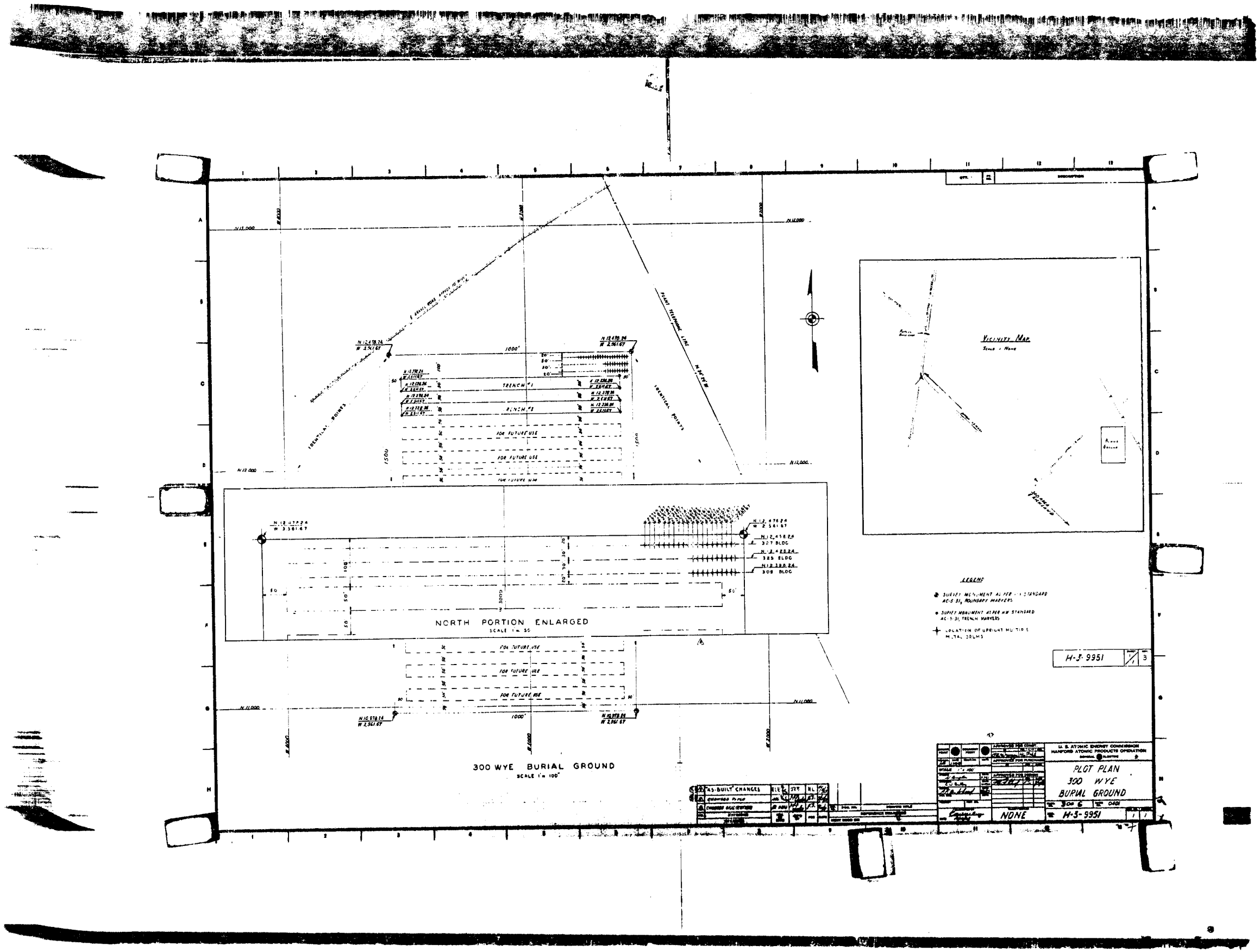

NORTH PORTION ENLARGED
SCALE 1" = 50'
300 WYE BURIAL GROUND
SCALE 1" = 100'
TRENCH #1
TRENCH #2
FOR FUTURE USE
FOR FUTURE USE
FOR FUTURE USE
FOR FUTURE USE
FOR FUTURE USE
FOR FUTURE USE
1000'
1500
VICINITY MAP
LEGEND
H-3-9951
U. S. ATOMIC ENERGY COMMISSION
HANFORD ATOMIC PRODUCTS OPERATION
PLOT PLAN
300 WYE
BURIAL GROUND
NONE
H-3-9951

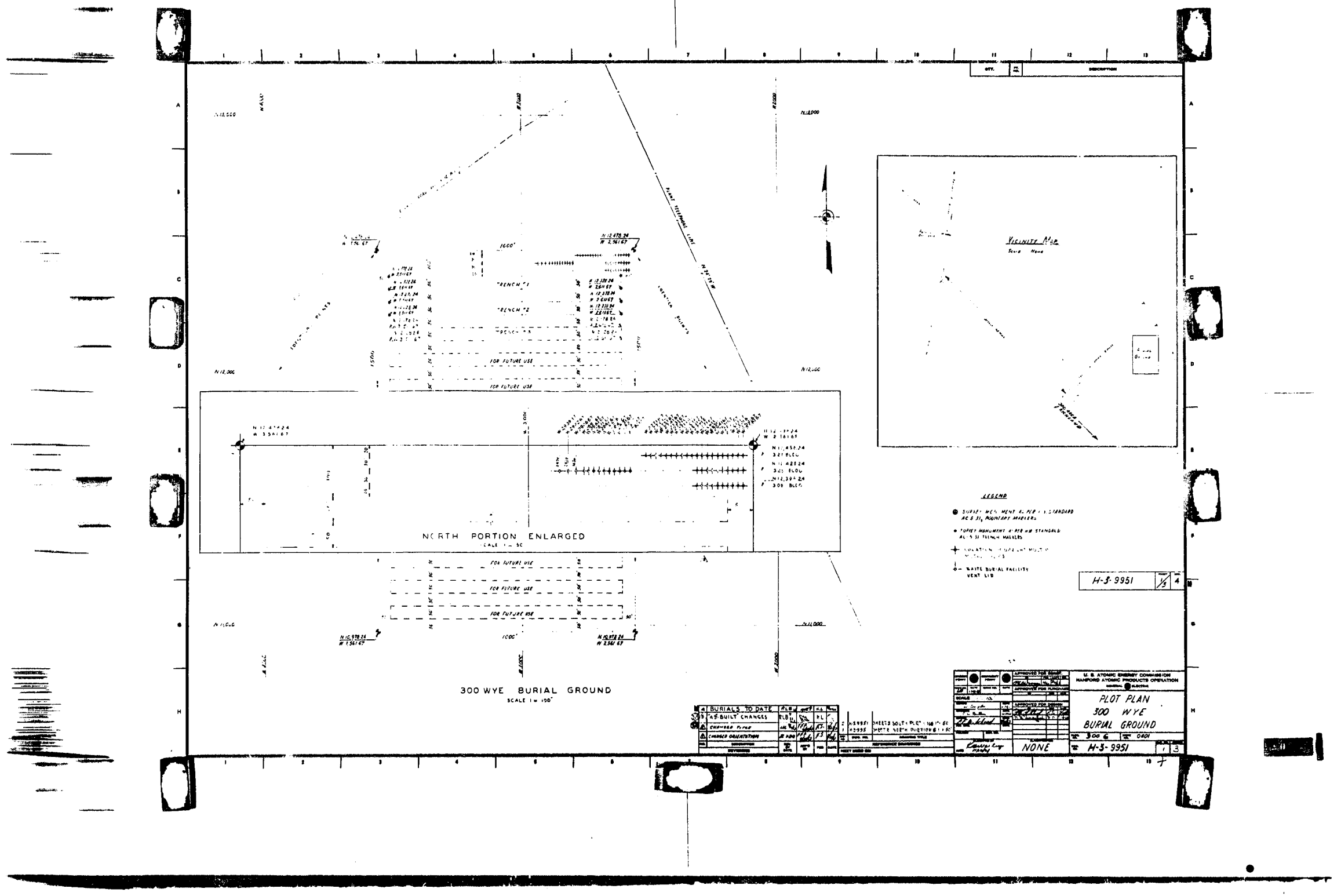
NORTH PORTION ENLARGED
SCALE 1 = 50'
300 WYE BURIAL GROUND
SCALE 1 = 100'
FOR FUTURE USE
"TRENCH" 1
"TRENCH" 2
VICINITY MAP
LEGEND
H-3-9951
PLOT PLAN
300 WYE
BURIAL GROUND
NONE
U. S. ATOMIC ENERGY COMMISSION
HANFORD ATOMIC PRODUCTS OPERATION

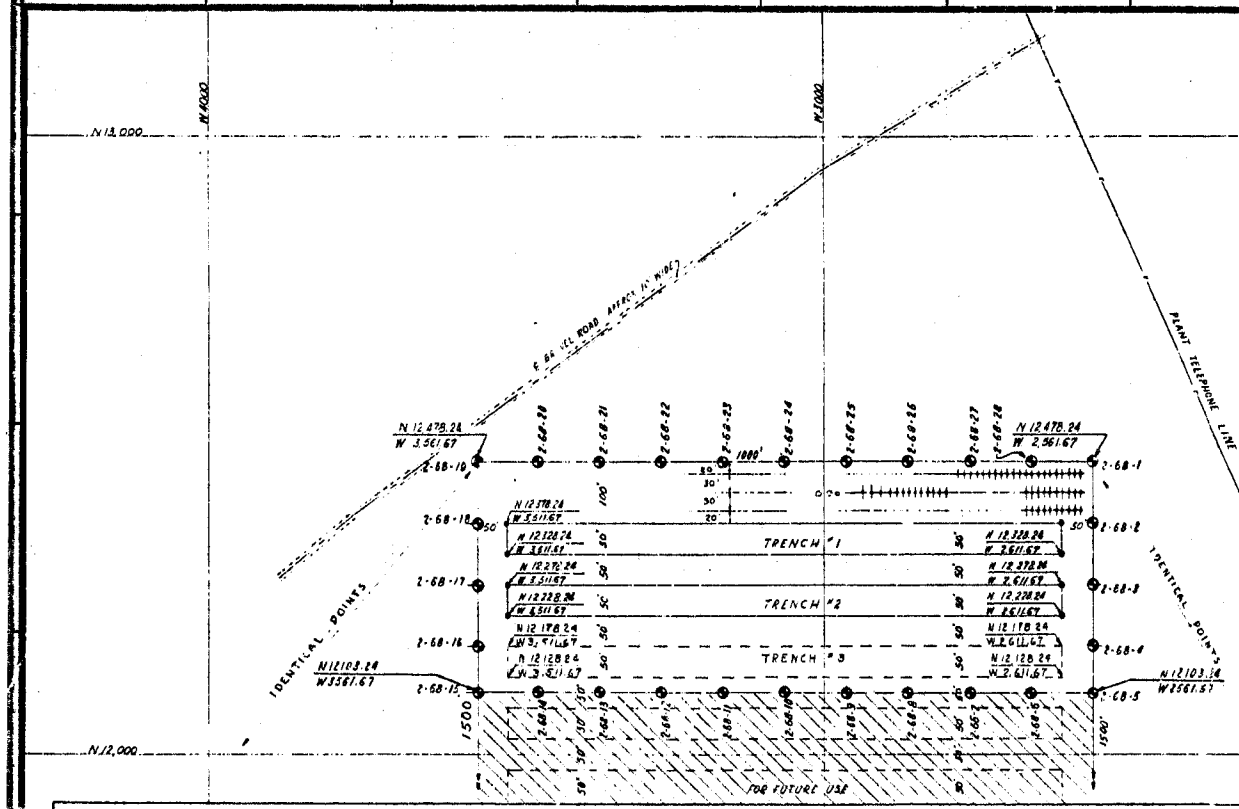

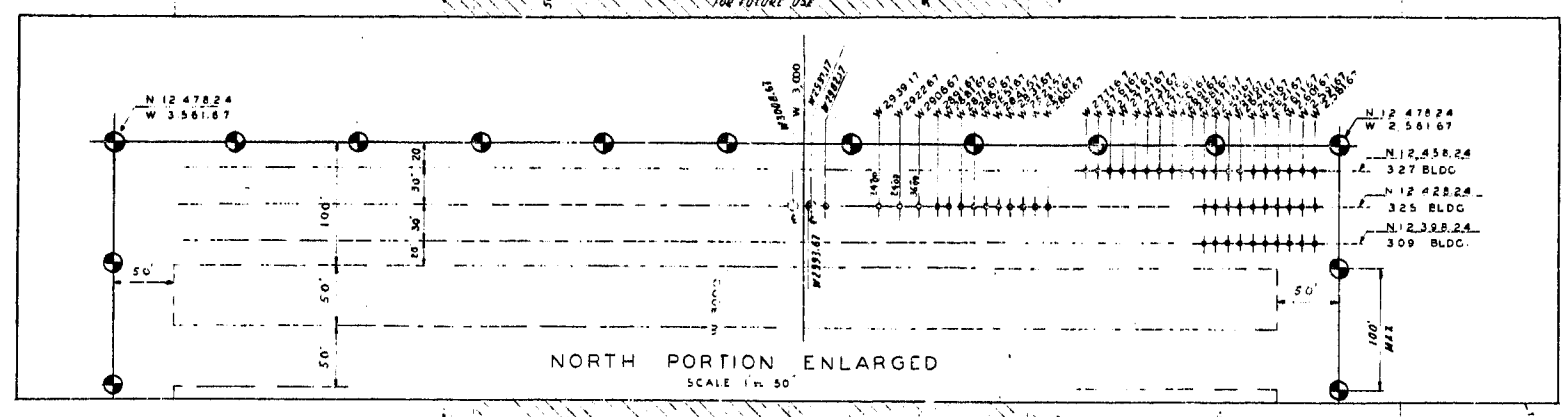

300 WYE BURIAL GROUND

SCALE 1" = 100'

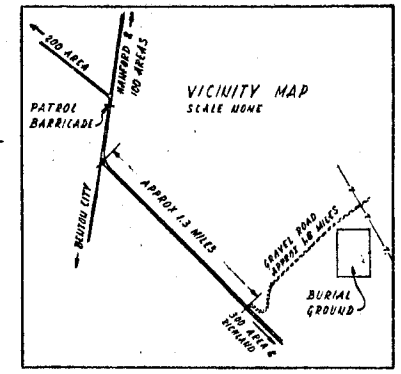

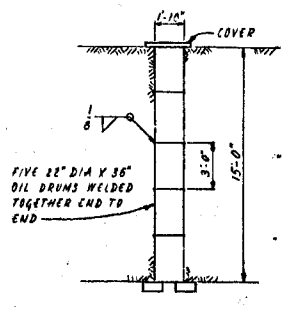

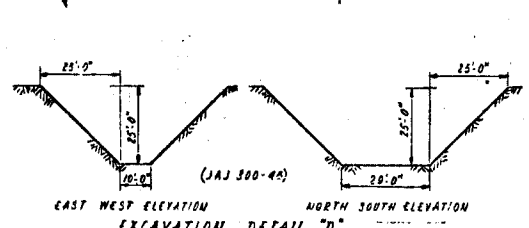

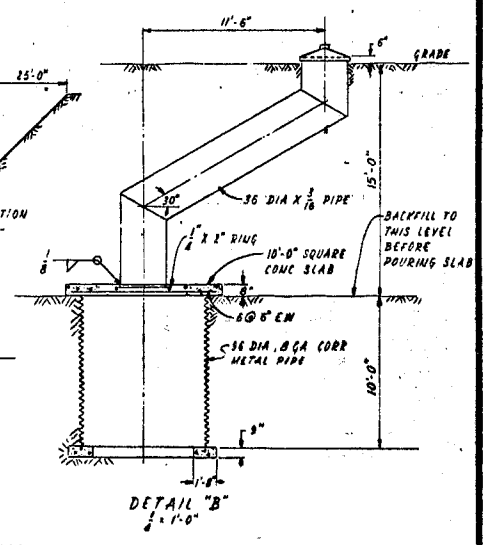

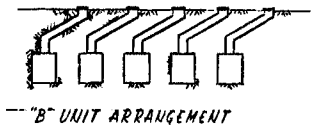

LEGEND

- IDENTIFICATION MARKERS AS PER HANFORD STANDARD AC-5-40, AC-3-20 & DI AC-5-40
- WASTE CONTAINER DETAIL "B" LOCATION
- LOCATION OF UPRIGHT MULTIPLE METAL DRUMS, SEE DETAIL "A"
- WASTE BURIAL FACILITY VENT LID, SEE DETAIL "B" LOCATION
- AREA NOT USED

NOTE: COORDINATES ARE HANFORD GRID

H-3-9951 | SHEET 1/1 | REV. 5

NO.	DESCRIPTION	REV. BY / DATE	APP'D BY	FOR	DATE
5	TWPR 2-68-28 ADDED ID MARKERS 1-68 (1) COMBINED SHEETS 1,2 & 3	HKZ 2-16-68			
4	BURIALS TO DATE	RLB		H.L.	
3	"AS-BUILT" CHANGES	RLB		H.L.	
2	CHANGED TYPE			F.S.	
1	CHANGED ORIENTATION			F.S.	

REFERENCE DRAWINGS

NEXT ASSY USED ON

APPROVED FOR CONST.
APPROVED FOR PURCHASE
APPROVED FOR DESIGN
CONSIDERATION: NONE

U. S. ATOMIC ENERGY COMMISSION
HANFORD ATOMIC PRODUCTS OPERATION
GENERAL ELECTRIC

PLOT PLAN
300 WYE
BURIAL GROUND

SCALE 1" = 100'
DRAWN: J. Cooper
TRACED: S.C. Rose
DESIGNED: W. Pickford
CHECKED: Kennedy Hanby

H-3-9951 | REV. 1.1

QTY.	PT. NO.	DESCRIPTION

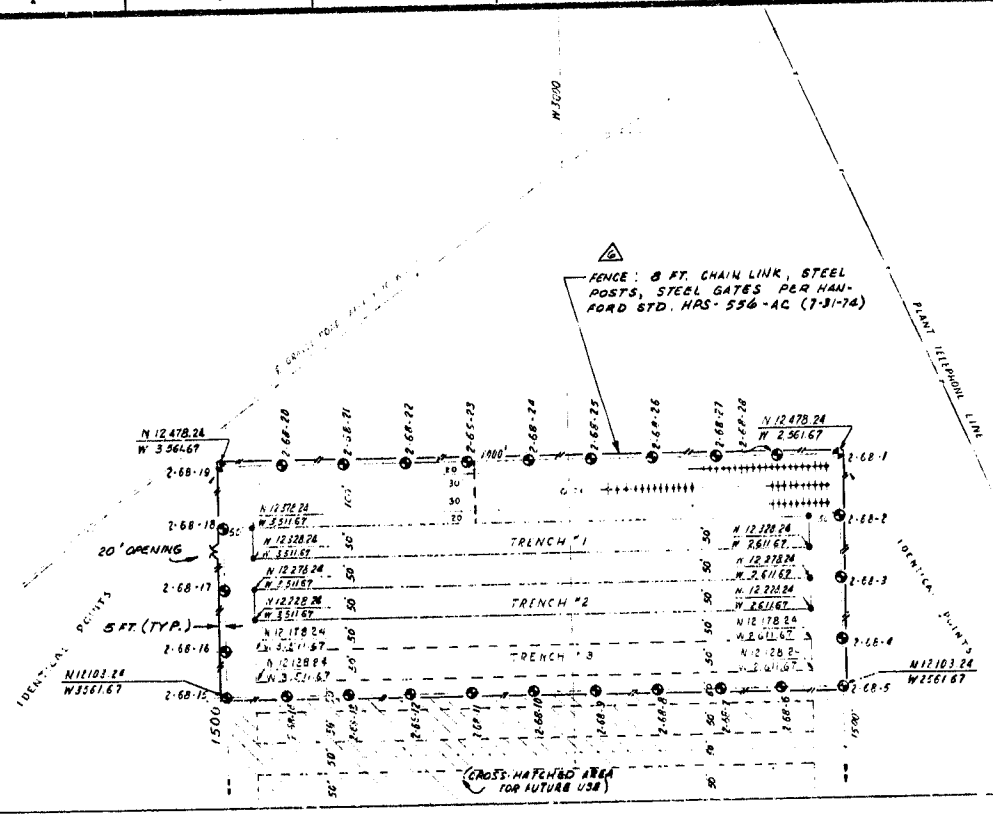

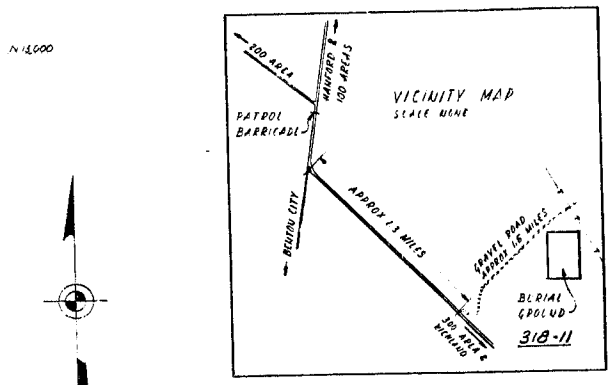

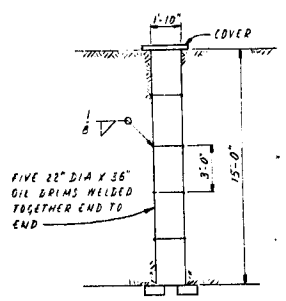

DETAIL "A"
1" = 1'-0"

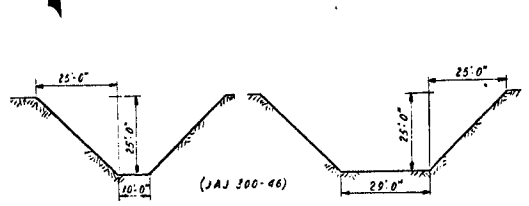

EXCAVATION DETAIL "D"
1" = 20'-0"

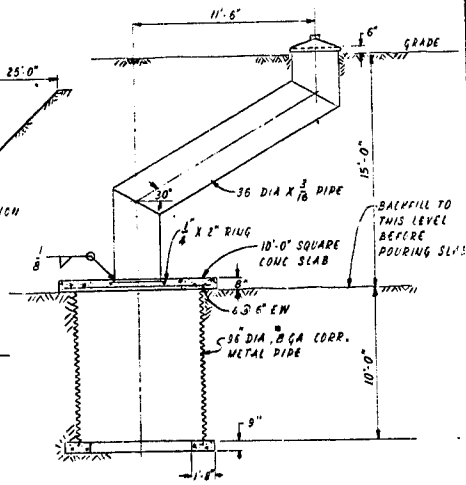

DETAIL "B"
1" = 1'-0"

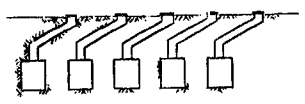

"B" UNIT ARRANGEMENT

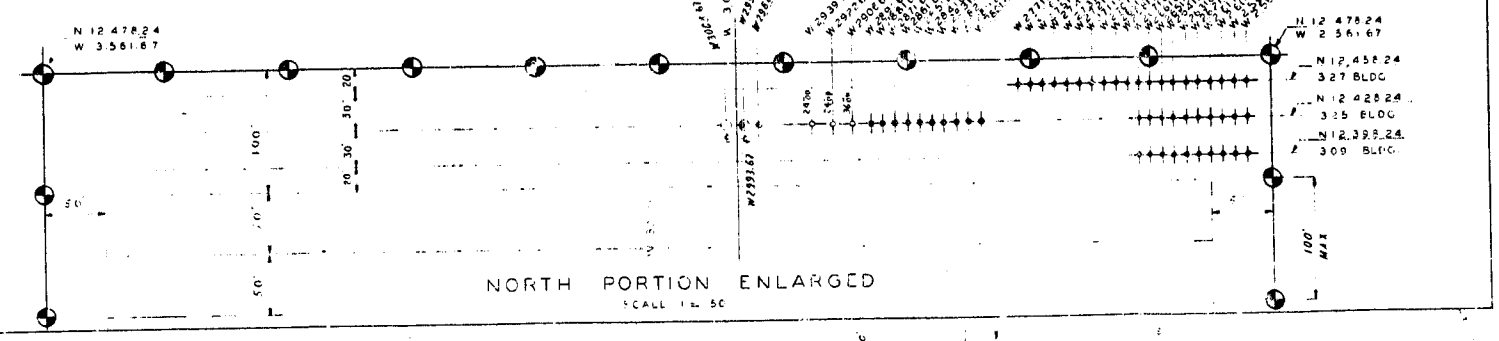

NORTH PORTION ENLARGED
SCALE 1" = 50'

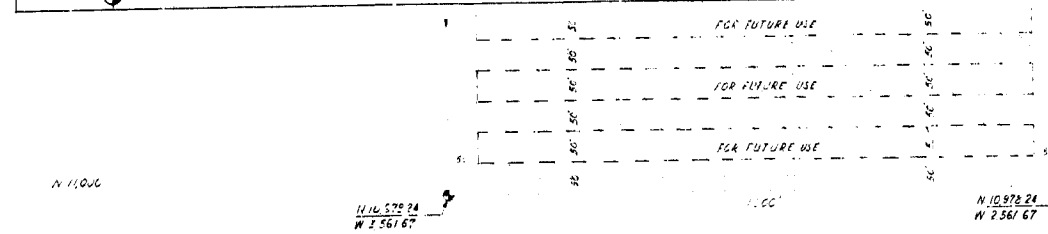

300 WYE BURIAL GROUND (318-11)
SCALE 1" = 100'

LEGEND

- IDENTIFICATION MARKERS AS PER HANFORD STANDARD AC-5-40, AC-3-20 & DI AC-5-40
- WASTE CONTAINER DETAIL "B" LOCATION
- LOCATION [illegible] 5, SEE DETAIL "A"
- WASTE BURIAL FACILITY VENT SITE, SEE DETAIL "B" LOCATION
- AREA NOT USED

NOTE: COORDINATES ARE HANFORD GRID

H-3-9951 | SHEET 1/1 | REV. 6

NO.	DESCRIPTION	REV. BY DATE	APP'D BY	FOR	DATE
6	TITLE REVISED (0060 FENCE & GATES)				
5	ADDED 10 MARKERS 2-68-1 THRU 2-68-28 COMBINED SHEETS 1, 2 & 3				
4	BURIALS TO DATE				
3	AS-BUILT UPDATE				
2	CHANGED TITLE				
1	CHANGED ORIENTATION				

REVISIONS

DWG NO.	DRAWING TITLE
	REFERENCE DRAWINGS
	NEXT USED ON

CHECK PRINT		CONSENT PRINT	
ISSUE NO.	DATE	ISSUE NO.	DATE
SCALE			
DRAWN	DATE		
CHECKED	DATE		
ENGR.	DATE		
PROJECT	SHEET NO.		
CLASSIFIED BY	DATE	CLASSIFICATION	

APPROVED FOR CONST.

BY	NOS.	DATE	REV.
	HL		

APPROVED FOR PURCHASE

BY	JOB	DATE

APPROVED FOR DESIGN

BY	JOB	DATE

U. S. ATOMIC ENERGY COMMISSION
HANFORD ATOMIC PRODUCTS OPERATION
GENERAL ELECTRIC

PLOT PLAN 318-11
300 WYE
BURIAL GROUND

WORK NO.	300 GEN.	WORK NO.	0401
DRAWING NO.	H-3-9951	SHEET NO.	1
		REV. NO.	1

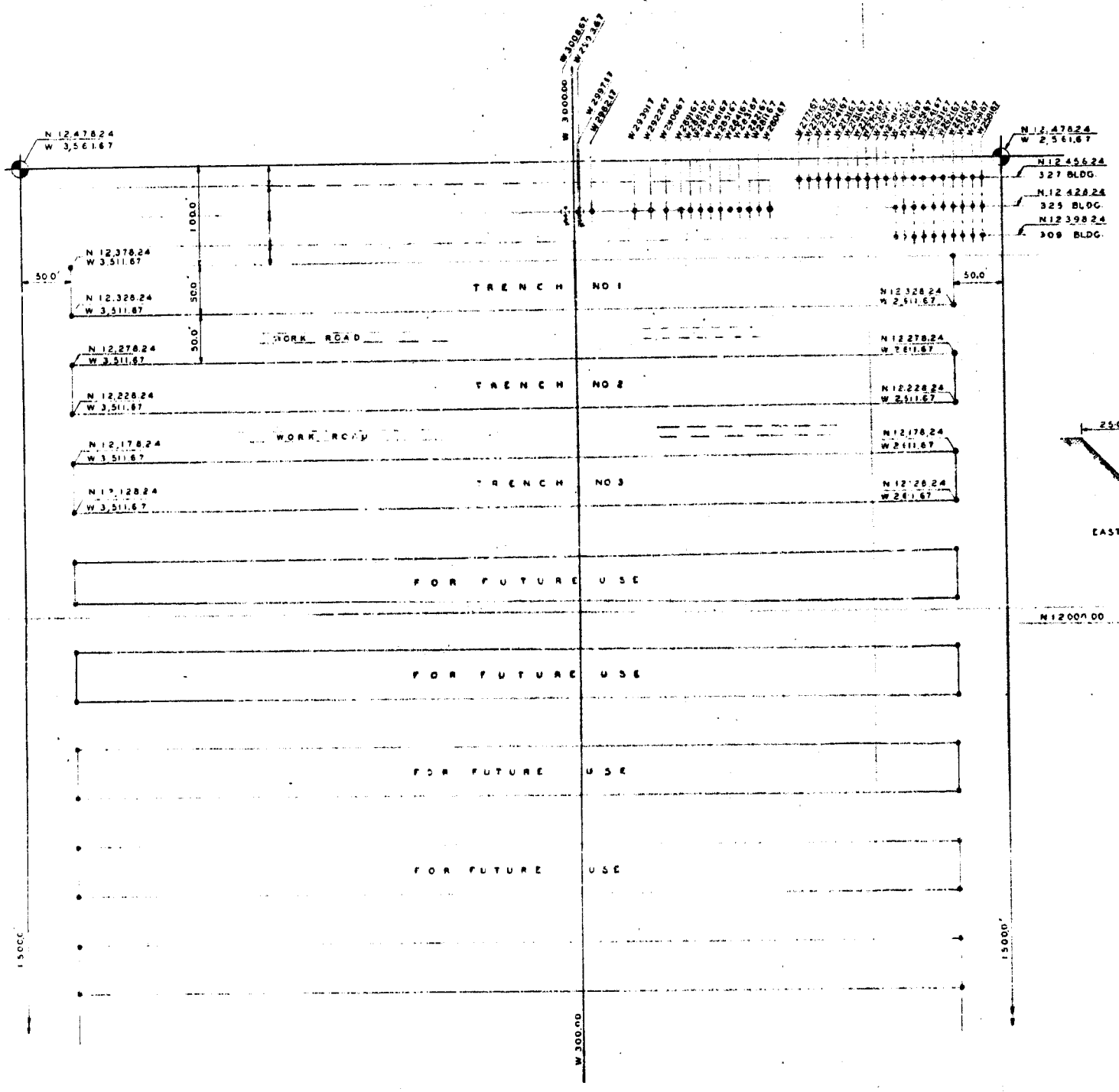

300 WYE BURIAL GROUND - NORTH PORTION

SCALE 1" = 50'

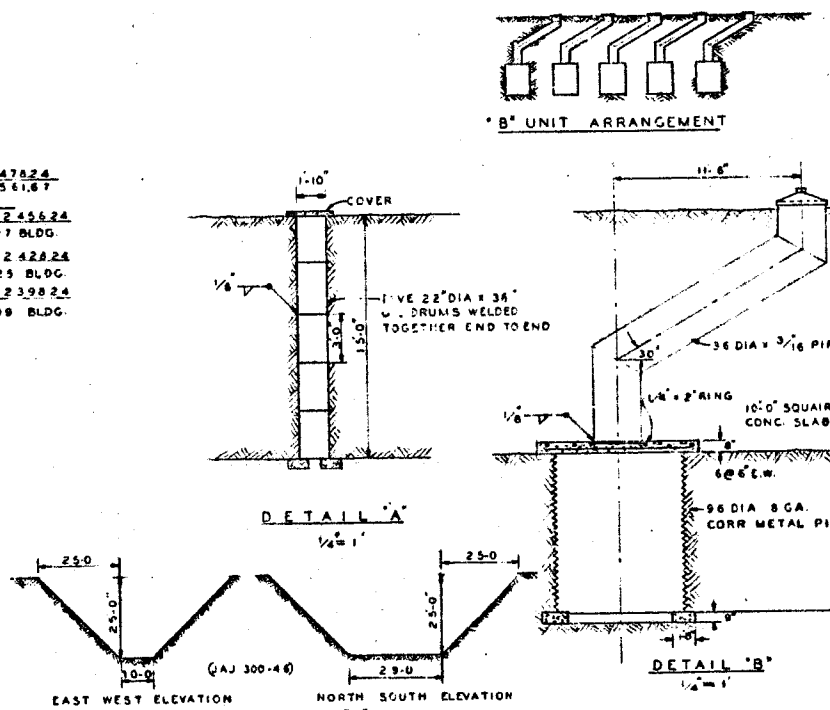

LEGEND

- SURVEY MONUMENT AS PER HW STANDARD AC-5-31, BOUNRY MARKERS
- SURVEY MONUMENT AS PER HW STANDARD AC-5-31, TRENCH MARKERS
- LOCATION OF UPRIGHT MULTIPLE METAL DRUMS SEE DETAIL "A"
- VENTED WASTE FACILITY - SEE DETAIL "B"
- WASTE CONTAINER DETAIL 'B' LOCATION

H 3 9951 2/3 7

7	CHECKED FOR "AS BUILT"	
6	ADDITION CONTAINERS	
5	SCALE ENLARGED FROM 50 EXPANDED TO 3 SHEETS REVISED FOR CLEARITY	

U. S. ATOMIC ENERGY COMMISSION
HANFORD ATOMIC PRODUCTS OPERATION
GENERAL ELECTRIC

PLOT PLAN
300 WYE
BURIAL GROUND
NORTH PORTION ENLARGED

SCALE 50' = 1"

APPROVED FOR CONST.
APPROVED FOR PURCHASE
APPROVED FOR DESIGN

NONE

300-G 0401

H 3 9951 2 3

300 WVE BURIAL GROUND (618-11)

SCALE 1" = 100'

WAS FORMERLY H-3-3351

AS BUILT RECORD DWG NOT FOR FABRICATION

QUALITY ASSURANCE LEVEL III

NOTES:
1. COORDINATES ARE HANFORD GRID.
2. THIS DWG CONTAINS NO UNIQUE PROCUREMENT REQUIREMENTS.

H-6-930

LEGEND

- IDENTIFICATION MARKERS AS PER HANFORD STANDARD AC-5-40, AC-3-20 & DI AC-5-40
- WASTE CONTAINER DETAIL "B" LOCATION
- LOCATION OF UPRIGHT MULTIPLE METAL DRUMS, SEE DETAIL "A"
- WASTE BURIAL FACILITY VENT LID, SEE DETAIL "B" LOCATION
- AREA NOT USED

NORTH PORTION ENLARGED

SCALE 1" = 50'

309 BLDG. N 12 398.24
325 BLDG. N 12 428.24
327 BLDG. N 12 458.24
N 12 478.24 W 2 561.67
N 12 478.24 W 3 561.67
N 10 978.24 W 3 561.67
N 10 978.24 W 2 561.67
SURVEY MONUMENT PER HANFORD STD AC-5-31
FOR FUTURE USE
FOR FUTURE USE
FOR FUTURE USE
100'
50'
MAX
100'
50'
5 @ 20' = 100'
3000
N 12,000
N 13,000
N 11,000
N 10,000
N 9,000
N 8,000
N 15,000
N 14,000

"B" UNIT ARRANGEMENT

DETAIL "B"
1" = 1'-0"

96 DIA .8 GA CORR. METAL PIPE
6" CMP
10'-0" SQUARE CONE SCRN
1/4" X 2" PLUG
36 DIA X 3/8 PIPE
BACKFILL TO THIS LEVEL BEFORE POURING SLAB
GRADE
30°
15'-0"
11'-6"

EXCAVATION & DETAIL "D"
FOR EAST WEST ELEVATION NORTH SOUTH ELEVATION
1" = 20'-0"
(JAJ 300-44)
99'-0"
25'-0"
10'-0"
25'-0"

DETAIL "A"
1" = 1'-0"
FIVE 22" DIA X 36" OIL DRUMS WELDED TOGETHER END TO END
15'-0"
COVER
1'-10"

VICINITY MAP
SCALE NONE
618-11
300 AREA
BURIAL GROUND
GRAVEL ROAD CONNECTS TO WELLS
APPROX 1.5 MILES
BUFFON CITY
PATROL BARRICADE
APPROX 200 YARDS
200 AREA

FENCE: 8 FT CHAIN LINK, STEEL POSTS, STEEL GATES PER HANFORD STD. HPS-556-AC (7-31-74)

PLANT TELEPHONE LINE

LOCATION IDENTICAL POINT 3

5 FT (TYP.)

20' OPENING

TRENCH #3
TRENCH #2
TRENCH #1

(CROSS-HATCHED AREA FOR FUTURE USE)

N 12,000
N 13,000
N 14,000
N 15,000
N 16,000

NO.	DESCRIPTION	REVISIONS BY	APP'D BY	DATE	NEXT USED ON

REFERENCE DRAWINGS

DWG. NO.	DRAWING TITLE

CHECK POINT	APPROVED FOR CONST.	CONSTRUCTION PROJECT	DATE	ISSUED DWG.	DATE

APPROVED FOR PURCHASE

DESIGN	DRAWN	TRACED	CHECKED	APPROVED PDE DESIGN
S. SPRINKLES	TAYLOR			

SCALE 1" = 100'

Westinghouse Hanford Company
Richland, Washington

U.S. Department of Energy
Richland Operations Office

PLOT PLAN 618-11
300 WVE
BURIAL GROUND #2

NOT REQ'D | NONE

618-11 | H-6-930

QTY.	PT. MK.	DESCRIPTION

APPENDIX C

HANDBOOK OF SHIPPING CONTAINERS, HEDL MG-104
PAGES 1, 3, 5, 7, 9, 15, 23, and 27

and

CASK PHOTOGRAPHS 0640160-3, and 0640160-1

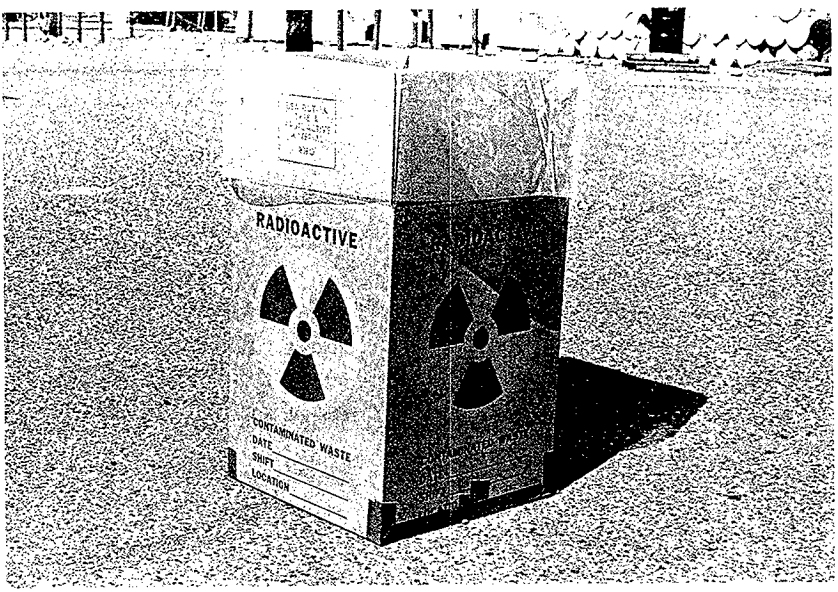

1. COMMON NAME: Waste carton
2. OFFICIAL NAME: Carton, corrugated, radioactive
3. CONTAINER EXTERIOR DIMENSIONS: 15" x 16" x 16" and 18" x 18" x 24"
   INTERIOR DIMENSIONS: ~15" x 16" x 16" and ~18" x 18" x 24"
   EMPTY WEIGHT: N/A MAXIMUM GROSS WEIGHT: 65 pounds
   SHIELDING MATERIAL: None THICKNESS: N/A
   DESCRIPTION DRAWING No.
   Ready to assemble cardboard cartons.
   FOR INFORMATION CONTACT: Available from Rockwell Stores, Caption 42.
   No. OF AVAILABLE CONTAINERS: (Available as RHO Stores Item 42-1580-135 (15" x 16" x 16") and Item 42-1580-150 (18" x 18" x 24")

BD-7800-006 (4-82)

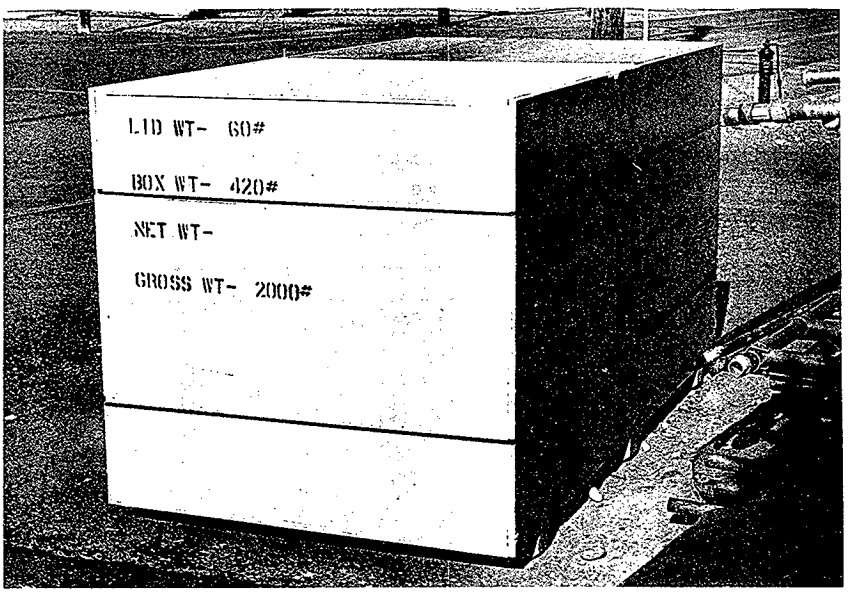

1. COMMON NAME: Plywood Burial Box
2. OFFICIAL NAME: Plywood Burial Container 4x4x8
3. CONTAINER EXTERIOR DIMENSIONS: Various, between 24" x 24" x 36" and 48" x 60" x 96"
   INTERIOR DIMENSIONS: Various, between 23" x 23" x 35" and 47" x 59" x 95"
   EMPTY WEIGHT: 300-420 pounds MAXIMUM GROSS WEIGHT: depends on size: 2000 lbs max
   SHIELDING MATERIAL: Wood THICKNESS: 3/4"
   DESCRIPTION DRAWING No. N/A

   A family of single trip, wooden burial boxes constructed of 3/4" plywood. A 2" x 4" inner frame shall be used at joints. All joints shall be glued and nailed; lid nailed down. A minimum of 2 steel bands shall be used.
   FOR INFORMATION CONTACT: WSO, 6-3012

   No. OF AVAILABLE CONTAINERS: To be built as specified

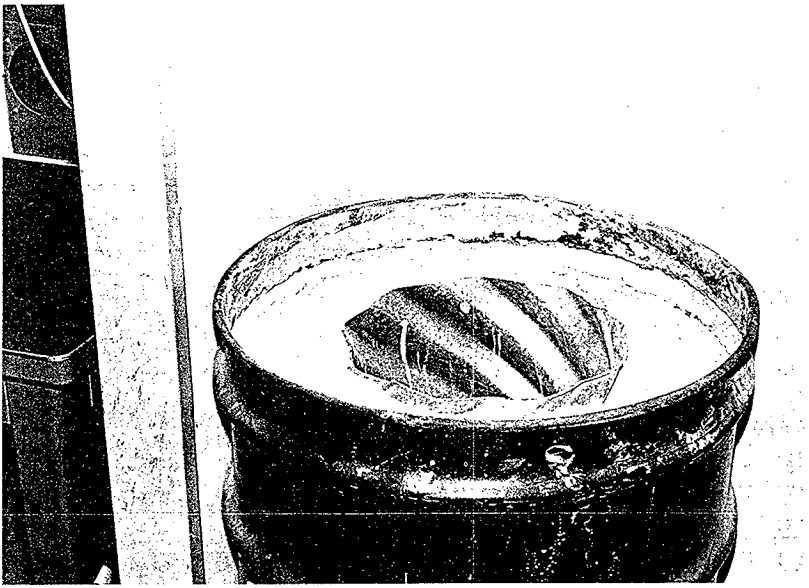

1. COMMON NAME: Concrete Drum Non TRU
2. OFFICIAL NAME: Concrete Shielding Drum
3. CONTAINER EXTERIOR DIMENSIONS: 24" OD x 33-1/4" H
   INTERIOR DIMENSIONS: 12" OD x 26" H
   EMPTY WEIGHT: ~700 pounds MAXIMUM GROSS WEIGHT: 860 pounds
   SHIELDING MATERIAL: concrete THICKNESS: 6"
   DESCRIPTION DRAWING No. Shop built
   Built by Waste Systems Operations per requirements.
   FOR INFORMATION CONTACT: Waste System Operations, 6-3012
   No. OF AVAILABLE CONTAINERS: as ordered

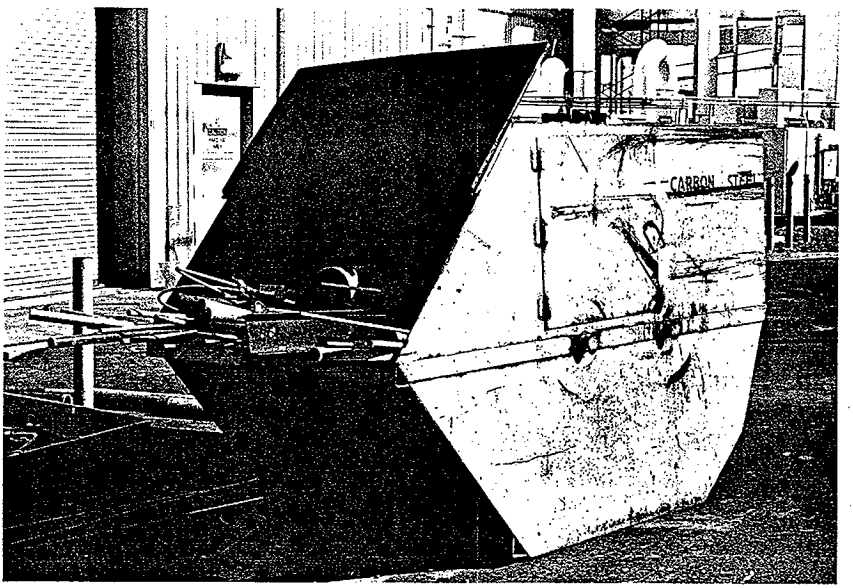

1. COMMON NAME: Scrap Lugger
2. OFFICIAL NAME: Load Lugger
3. CONTAINER EXTERIOR DIMENSIONS: 8' L x 6' W; 3 depths: 3' or 4-1/2' or 7'
   INTERIOR DIMENSIONS: same
   EMPTY WEIGHT: 2000 lbs MAXIMUM GROSS WEIGHT: 14,000 lbs
   SHIELDING MATERIAL: None THICKNESS:
   DESCRIPTION DRAWING No.

Available with open tops or lids that can be locked for control of material.
FOR INFORMATION CONTACT: RHO Transportation

No. OF AVAILABLE CONTAINERS: from RHO

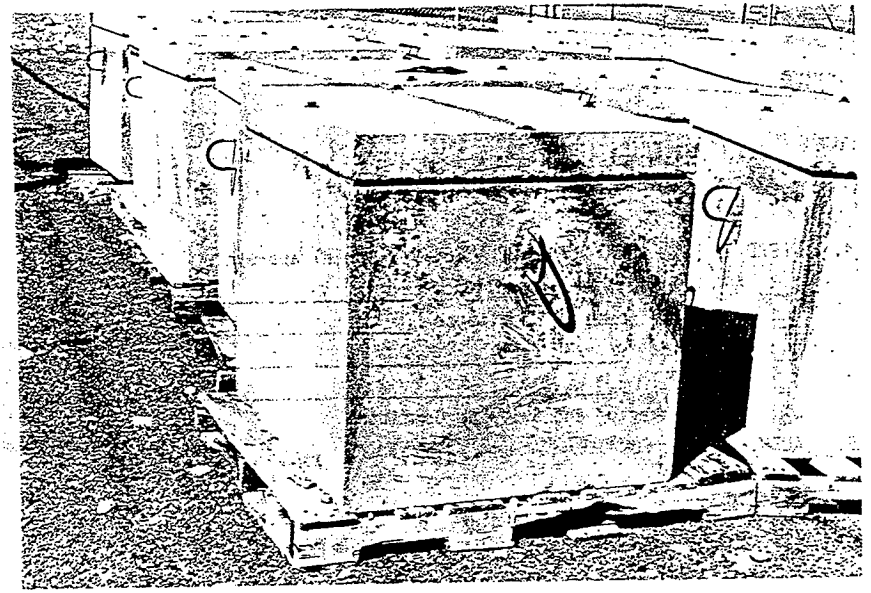

1. COMMON NAME: Non-TRU Concrete Filter Burial Box
2. OFFICIAL NAME: Non-TRU Concrete Filter Burial Box
3. CONTAINER EXTERIOR DIMENSIONS: 34" x 34" x 34"
   INTERIOR DIMENSIONS: 30" x 30" x 26"
   EMPTY WEIGHT: 2400 pounds MAXIMUM GROSS WEIGHT: 2420 pounds
   SHIELDING MATERIAL: Concrete THICKNESS: 4"
   DESCRIPTION DRAWING No. H-3-35290

Constructed of 3000 lbs/sq in. concrete. Lid is sealed with neoprene gasket; bonded with Silicon rubber (Dow Corning RTV-732).
FOR INFORMATION CONTACT: Waste Systems Operations, 6-3012

No. OF AVAILABLE CONTAINERS: 20

1. COMMON NAME: 55 gallon steel drum/30 gallon steel drum
2. OFFICIAL NAME: DOT Spec 17H drums
3. CONTAINER EXTERIOR DIMENSIONS: 24" OD x 35" H / 20" OD x 29-1/2" H
   INTERIOR DIMENSIONS: 22-1/2" Diam x 33-1/4" H / 18" Diam x 28" H
   EMPTY WEIGHT: 50 lbs/ 35 lbs MAXIMUM GROSS WEIGHT: 840 pounds/400 pounds
   SHIELDING MATERIAL: Steel THICKNESS: 18 gauge minimum thickness
   DESCRIPTION DRAWING No. 49 CFR 178.118

Single trip steel 18 gauge waste containers. Lids shall be bolted and torqued to 40-ft lbs.

FOR INFORMATION CONTACT: Waste Systems Operations, RHO Stores

No. OF AVAILABLE CONTAINERS: Call WSO, 6-3012 to order 55 gallon drums, 30 gallon size available from RHO stores, Caption 42, Item No. 42-2230-200.

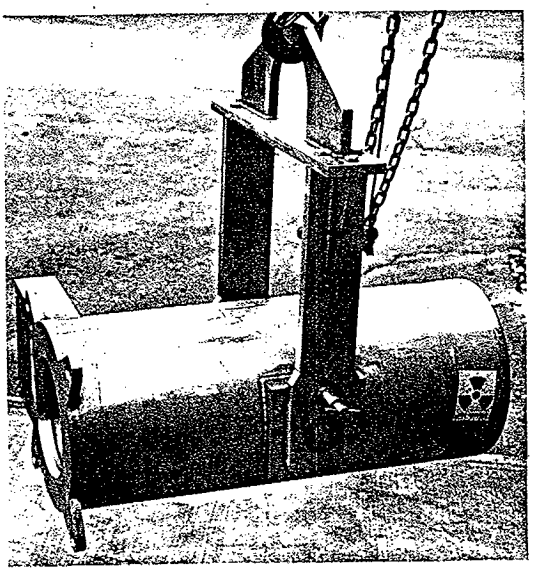

1. COMMON NAME: Tin Can Waste Cask
2. OFFICIAL NAME: 325-B Waste Disposal Cask
3. CONTAINER EXTERIOR DIMENSIONS: 14" OD x 29" L; 14" OD x 33" L
   INTERIOR DIMENSIONS: 8 1/4" diam. x 22" H; 8 1/4" diam x 26" H

   EMPTY WEIGHT: 1300 lbs/1400 lbs MAXIMUM GROSS WEIGHT: 1360 lbs/115 pounds

   SHIELDING MATERIAL: Lead THICKNESS: 2"

   DESCRIPTION DRAWING No. H-3-19558 (29")/H-3-28968 (33")

   Two similar casks except for length and weight. Each is equipped with yoke for loading. They are normally horizontally loaded - but may be pallet-mounted vertically after loading. Each accommodates ~0.5 cu. feet of waste. See special conditions.
   FOR INFORMATION CONTACT: Analytical Chemistry Dept., 6-3089

   No. OF AVAILABLE CONTAINERS: 2

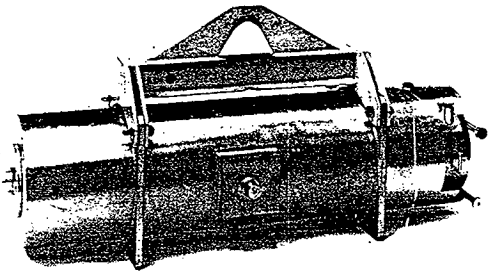

1. COMMON NAME: 327 Waste Cask
2. OFFICIAL NAME: Radioactive Waste Disposal Cask
3. CONTAINER EXTERIOR DIMENSIONS: 22" Diam. x 80" L
   INTERIOR DIMENSIONS: 8.715" (7.685" w/Liner) x 64-1/4" L
   EMPTY WEIGHT: 9500 pounds MAXIMUM GROSS WEIGHT: 9560
   SHIELDING MATERIAL: Lead THICKNESS: 5-5/8"
   DESCRIPTION DRAWING No. H-3-19831

   A cylindrical, horizontally-oriented cask. It accommodates 8, 1 gal cans, or approximately 1.24 cubic feet of waste.
   FOR INFORMATION CONTACT: Post Irradiation Testing, 6-5431

   No. OF AVAILABLE CONTAINERS: 1

APPENDIX D

327 BUILDING MILK PAIL CASK OPERATING PROCEDURE

MILK PAIL CASK OPERATING PROCEDURES

DISCUSSION

I. Purpose:

The purpose of the milk pail cask is the removal of large volumes of intermediate level radioactive wastes from any standard cell in the 327 building. The cask is intended to eliminate the use of cardboard cartons for the removal of cell wastes except in the case of very large volumes of very low level material. The milk pail cask will also largely supplant the waste cask previously used for the removal of small volumes of higher level wastes.

II. Advantages:

The primary advantages of the milk pail cask are that it reduces contamination outside the cell and greatly reduces radiation exposure to Radiometallurgy personnel during waste removal and to personnel handling the waste at the burial grounds. Another advantage is that large, odd shaped objects may be removed in it. The cask will hold a "milk pail" 7 inches in diameter and 10 inches high, or any other object of that approximate size and shape. It provides a shield of 4 inches of lead on the sides, and 2 inches of lead on the bottom. In addition, the milk pails will normally contain gelatin during removal which will provide shielding slightly greater than an equivalent volume of water.

III. Limitations and Precautions:

Milk pails must be handled with care so that they maintain their shape for removal from the cell. No more than 30 lbs. of waste, including gelatin, should be loaded into a pail. (A full pail of gelatin weighs about 13 lbs.) The pail must be lifted carefully to prevent jamming it against the cell roof or in the port.

Milk pails, being made of aluminum, are soluble in any caustic, particularly sodium hydroxide, NaOH. Any such contact should be avoided, either liquid or dry.

Gelatin must be prepared properly and allowed to set at least 16 hours, before removal from a cell. (A procedure for gelatin preparation is presented in a separate section of this operating procedure.) No significant amount of any free liquid should ever be put into a milk pail in a cell. To do so might dilute the gelatin or modify its structure, reducing its strength. For the same reason, no chemical of any sort (including NaK) should be put into a pail unless it is in a sealed container.

Objects which float in gelatin should be punctured or weighted down before the gelatin is added. Any object that is not completely submerged in gelatin, should be "squirted" during pouring so that all surfaces are coated, and all particulate contamination trapped.

The slide should always be locked as soon as the cask is loaded. The exterior of the pail and the bail should be kept as clean as possible at all times to minimize contamination of the cask (and in turn, contaminating the trailer, truck and highway.)

OPERATING PROCEDURES

I. Pail Preparation:

In preparing a pail for use, these steps are to be followed:

1. Check the bail for strength and the pail for shape.
2. Dry the outside of the pail.
3. Obtain a dry polyethylene bag 12" x 15" from the chemical prep. room.
4. Dust the interior of the bag with talc, and insert the pail into it.
5. Fold the excess plastic into a neat fold and fasten with two rubber bands about 1/4" from the top lip of the pail.
6. Fix a paper clip around the rubber bands so they can be removed by pulling the clip off the top of the pail.

The pail is then ready to place in the cell. CAUTION: The rubber bands must be placed near the top, above the rivets and must be tight enough to hold the plastic bag on the pail when loading into the cell in a strong draft. (Otherwise the bag may be sucked off the pail.) Do not drop the pail into the cell. This may damage the pail so that removal is difficult.

II. Gelatin Preparation:

Estimate the volume of gelatin solution required. The volume of the pail is six liters. There is no harm in making a slight miscalculation in the amount of solution prepared but the concentration must be correct. To prepare the gelatin solution, divide the estimated volume required in milliliters by 4 and weigh out that many grams of dry gelatin. For instance, to prepare 4 liters of gelatin solution, use 4 thousand grams of water (4 liters) and 1 thousand grams of dry gelatin. The concentration of the gelatin solution will then be 20%. Ordinarily, hot water from the tap is sufficient to dissolve the gelatin. However there is no harm in warming it slightly on the hot plate. It is not necessary to heat the water or the solution above 80°C. Add the gelatin to the water while stirring vigorously with the electric stirrer. The gelatin may have a tendency to form lumps or to float on top, but it will all dissolve within 3 to 5 minutes if thoroughly mixed. The gelatin solution should be poured into the pail soon after mixing, as it will start to set if allowed to cool or stand for more than 30 minutes. A portable funnel with a male taper joint and stand are provided for adding the gelatin through each cell top. Each cell has the female portion of a taper joint attached to a tygon tube running through the cell top. Where cells are equipped with a drain, this tubing must be rinsed with hot water both before and after adding the gelatin to the pail in the cell. Be certain, however, that the hot water does not go into the pail to be filled with gelatin. Also, all gelatin spilled on the tray must be flushed into the "hot" crib line with hot water as soon as possible.

III. Cask Handling:

Generally, the operation will start with the removal of the cask from the trailer or truck after it is backed into the canyon.

1. Remove the retaining studs employed to hold down the cask.
2. As soon as the cask is removed, request RMO to check the truck or trailer.

Then decontaminate as necessary, especially the inside of the chute. If there is a plastic bag covering the chute bottom, remove it at this time.

3. Remove the appropriate cell plug and insert the aligning plate. Avoid any direct exposure from the cell during these operations.
4. With the cask near the hole, unlock and open the slide.
5. Lower the cask into position over the hole.
6. Remove the top plug from the cask, and insert the hook and cable through the top and into the cell.
7. An operator with a manipulator should remove the rubber bands and paper clip from the can and discard it in the cell (not in the can) and then attach the hook to the bail. During this operation every effort should be made to avoid contamination of the hook and pail.
8. As the pail is raised, the manipulator operator should remove the plastic bag by pulling it from the bottom, again being cautious to avoid contamination of the pail.
9. Raise the pail carefully into the cask and close and lock the slide. Check the lock to be certain it is properly locked.
10. Withdraw the cable and insert the top plug.
11. Immediately swab the cable and hook to remove possible contamination.
12. Remove the cask with the crane, withdraw the aligning plate, and reinsert the cell plug.
13. Swab the aligning plate.
14. Avoid direct exposure of any personnel to the bottom face of the cask (which has only 2 inches of lead shielding.)
15. Check the cask bottom for contamination and clean if necessary.
16. Return the cask to the trailer facing the slide to the front of the trailer.
17. Bolt the cask down.
18. Recheck to be certain the slide is locked closed.

18. Obtain RMO clearance for truck or trailer removal.

IV. Cask Decontamination:

The cask should be decontaminated as necessary, or routinely after about six runs. Remove and discard the plastic boot covering the slide. Remove the slide stops and slide. Suspend the cask in a horizontal position (Using both crane hooks) and swab. Nitric acid may be used except on the brass knob and plug. Always follow acid wash with clean water. Then acetone may be used.

LD Turner
CL Boyd
CG McCormack
RL Brandt
LJ Defferding
WJ Gruber
ME McMahan
R Teats

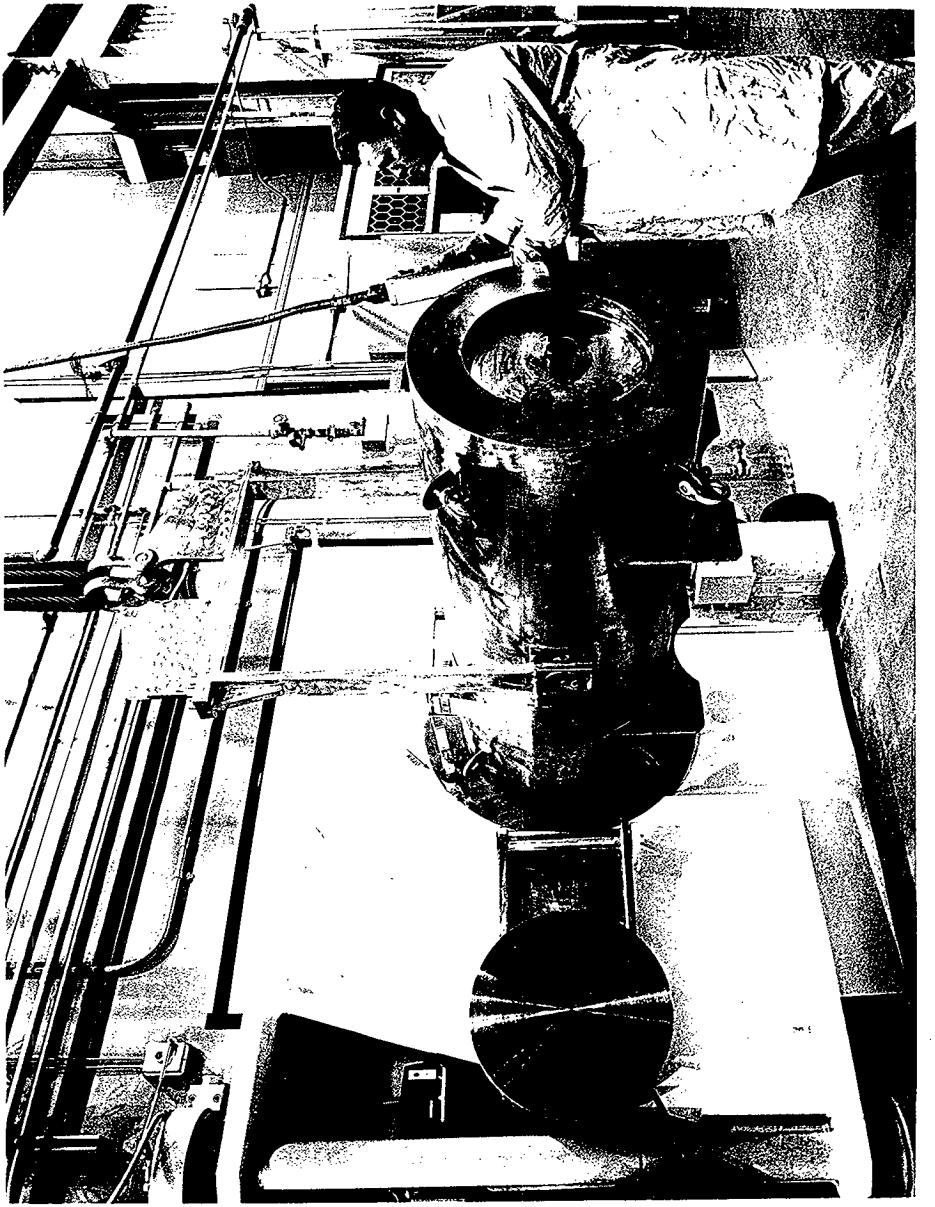

325-A Casks for Removing Large (15-gal) Waste cans from Hot Cell

325-A Cask for Removing 1-Gallon cans of Hot-Cell Waste

APPENDIX E

BURIAL SITE SHIPPING RECORDS (300-N & WYE)
REPORTING PERIOD - JAN. 1, 1962 - Dec. 31, 1967

BURIAL SITE SHIPPING RECORDS - JAN. 1, TO JUNE 30, 1962

Radioactivity Level	Waste Description	Quantity	Volume (cu. m.)
10-1000 Ci/ft3	50 Gallon Drums filled with concrete	89	18.7
Under 10 Ci/ft3	Cardboard Cartons	2,448	311.8
10-1000 Ci/ft3	Milk Pail Cans	198	1.42
Over 1000 Ci/ft3	Stainless Steel Cans	75	0.14
Under 10 Ci/ft3	Lead in Wooden Crate	1	0.34
Under 10 Ci/ft3	Steel Cave Liner (plastic)	1	2.04

Burial Ground Assignment: 249.9 m3 cartons went to the Wye facility and 61.9 m3 went to the 300-N burial ground. 14.4 m3 drums of concrete went to the Wye and 4.3 m3 went to the 300-N facility.

BURIAL SITE SHIPPING RECORDS - JULY 1 TO DEC. 31, 1962
(Wye only, facility closed on Oct.2, 1962)

Radioactivity Level	Waste Description	Quantity	Volume (m3)
10-1000 Ci/ft3	50 Gallon Drums Filled with concrete	40	8.49
Under 10 Ci/ft3	Cardboard Cartons	1642	209.1

Estimated Acreage used during the reporting period 15,000 sq. ft.

BURIAL SITE SHIPPING RECORDS - JULY 1 TO DEC. 31, 1963
(Wye only, facility re-opened Sept. 1963)

Radioactivity level	Waste Description	Quantity	Volume (m3)
Under 10 Ci/ft3	Cardboard Cartons	1,660	211.4
10-1000 Ci/ft3	50 Gallon Drums	20	4.25
10-1000 Ci/ft3	Milk Pail Cans	151	1.08
Over 1000 Ci/ft3	Stainless Steel Cans (Gatling Gun cans)	80	1.70

Estimated Acreage used During the Reporting Period: 4500 sq.ft.

BURIAL SITE SHIPPING RECORDS - JAN. 1 TO JUNE 30, 1964
(300-Wye)

Radioactivity Level	Waste Description	Quantity	Volume (m3)
Under 10 Ci/ft3	Cardboard Cartons	3,750	477.6
Under 10 Ci/ft3	50 Gallon Drums	25	5.31
10-1000 Ci/ft3	Milk Pail Cans	425	2.21
Over 1000 Ci/ft3	Gatling Gun Cans	150	0.14

Estimated Area used during the Reporting Period: 16,000 sq.ft.

BURIAL SITE SHIPPING RECORDS - JULY 1 TO DEC. 31, 1964
(300-Wye)

Radioactivity Level	Waste Description	Quantity	Volume (m3)
Under 10 Ci/ft3	Cardboard Cartons	4,875	620.8
Under 10 Ci/ft3	50 Gallon Drums	16	3.40
10-1000 Ci/ft3	Milk Pail Cans	384	1.73
10-1000 Ci/ft3	Hot Cell Pails (5 gal.)	23	0.65
Over 1000 Ci/ft3	Gatling Gun Cans	56	0.06

Estimated Area Used During the Reporting Period: 22,000 sq. ft.

BURIAL SITE SHIPPING RECORDS - JAN 1 TO JUNE 30, 1965
(300-Wye)

Radioactivity Level	Waste Description	Quantity	Volume (m3)
Under 10 Ci/ft3	Cardboard Cartons	4,225	538.1
" " "	55 Gallon Drums	400	84.9
" " "	Wooden Crates	10	13.58
10-1000 Ci/ft3	Milk Pail Cans	420	1.58
" " "	Waste Pails (5 gal hot-cell)	6	0.11
" " "	Waste Cans (3 ft3)	48	3.25
Over 1000 Ci/ft3	Gatling Gun Cans	135	0.16

Estimated Area Used During the Reporting Period: 20,000 sq. ft.

BURIAL SITE SHIPPING RECORDS - JULY 1 TO DEC. 31, 1965
(300 Wye)

Radioactivity Level	Waste Description	Quantity	Volume (m3)
Under 10 Ci/ft3	Cardboard Cartons	3,953	503.4
" " "	Wooden Crates	8	10.87
10-1000 Ci/ft3	Milk Pail Cans	369	1.42
" " "	Waste Cans (2 ft3)	47	2.66
" " "	CWS Filters	6	1.36
Over 1000 Ci/ft3	Gatling Gun Cans	146	0.17

Estimated Area Used During Reporting Period: 15,000 sq. ft.

BURIAL GROUND SHIPPING RECORDS - JAN 1 TO JUNE 30, 1966
(300-Wye)

Radioactivity Level	Waste Description	Quantity	Volume (m3)
Under 10 Ci/ft3	Cardboard Cartons	3,132	398.9
10-1000 Ci/ft3	Milk Pail Cans	313	1.19
" " "	Waste Cans (5 Gal.)	4	0.08
" " "	Waste Cans (1 ft3)	19	0.54
Over 1000 Ci/ft3	Gatling Gun Cans	123	0.14

Estimated Area Used During Reporting Period: 15,000 sq. ft.

BURIAL GROUND SHIPPING RECORDS - JULY 1 TO DEC. 31, 1966
(300 Wye)

Radioactivity Level	Waste Description	Quantity	Volume (m3)
Under 10 Ci/ft3	Cardboard Cartons	2,113	269.1
10-1000 Ci/ft3	Milk Pail Cans	230	0.88
" " "	Waste Cans (5 gal.)	8	0.14
" " "	Waste Cans (1 ft3)	27	0.48

Estimated Area Used During Reporting Period: 10,000 sq. ft.

BURIAL GROUND SHIPPING RECORDS - JAN. 1 TO JUNE 30, 1967
(300 Wye)

Radioactivity Level	Waste Description	Quantity	Volume (m3)
Under 10 Ci/ft3	Cardboard Cartons	2,800	356.6
10-1000 Ci/ft3	Milk Pail Cans	438	1.70
" " "	Waste Cans (5-Gal.)	6	0.11
" " "	Waste Cans (1 ft3)	5	0.14

Estimated Area Used During Reporting Period: 12,000 sq. ft.

BURIAL GROUND SHIPPING RECORDS - JULY 1 TO DEC. 31, 1967
(300 Wye)

Radioactivity Level	Waste Description	Quantity	Volume (m3)
Under 10 Ci/ft3	Cardboard Cartons	3,311	421.7
10-1000 Ci/ft3	Milk Pail Cans	370	1.39
" " "	Waste Cans (5-Gal.)	40	0.76
" " "	Waste Cans (1 ft3)	38	1.08

Estimated Area Used During Reporting Period: 15,000 sq. ft.

Wye Burial Ground Closed on 12/31/67 permanently!

APPENDIX F

DATA FROM MONTHLY ACTIVITY REPORTS

"Hanford Laboratories Monthly Activities Report"
Hanford Atomic Products Operation, Richland, WA, 1962-1964

Date	Doc. No.	325 Luggers		Concrete Barrels	Milk Pails	Gatling Guns
1/62	HW-73202	3	(300-N)	12 shipments	23	1
2/62	HW-73202	3	"	4 shipments	---	---
3/62	HW-73514	5	(Wye)	21 shipments	---	---
4/62	HW-73905	4	"	3 shipments	---	---
5/62	HW-74153	4	"	3 shipments	---	---
6/62	HW-74522	1	"	4 shipments	---	---
7/62	HW-74813	2	"	2 shipments	---	---

Date	Doc. No.	300 Luggers	325 Luggers	Concrete Barrels	Burial Ground	
8/62	HW-75127	37	2	8 barrels (2 shipments)	Wye	9/62
	HW-75376	49	---	8 barrels	"	
10/62	HW-75625	48	---	16 "	300-N	
11/62	HW-75925	40	---	16 "	"	
12/62	HW-76315	27	---	12 "	"	
1/63	HW-76596	29	---	8 "	300-N	
2/63	HW-77046	29	---	26 "	"	3/63
	HW-77397	28	---	12 "	"	
4/63	HW-77709	25	4	4 "	300-N	
5/63	HW-78052	25	4	20 "	"	
6/63	HW-78420	19	3	8 "	"	
7/63	HW-78758	21	4	12 "	"	
8/63	HW-79046	22	2	20 "	"	
9/63	HW-79377	7	1	8 "	"	
"	"	13	2	10 "	300-Wye	
"	"	0	1	11 "	200-W	
10/63	HW-79726	25	2	4 "	300-Wye	
"	"	0	1	0 "	200-W	
11/63	HW-79999	19	3	4 "	300-Wye	
"	"	5	0	0 "	200-W	
12/63	HW-80560	16	3	2 "	300-Wye	
"	"	7	0	0 "	200-W	

Date	Doc. No.	300 Luggers	325 Luggers	Concrete Barrels	Remote Containers	Burial Ground
1/64	HW-81019	24	4	12 "		300-Wye
"	"	10	0	4 "		200-W
2/64	HW-81472	19	2	4 "		300-Wye
"	"	7	0	5 "		200-W

Date	Doc. No.	300 Luggers	325 Luggers	Concrete Barrels	Remote Containers	Burial Ground
3/64	HW-82001	26	2	7 "	115	300-Wye
"	"	7	0	8 "		200-W
4/64	HW-82428	20	5	2 "	93	300-Wye
"	"	6	0	5 "		200-W
5/64	HW-83000	20	3	3 "	86	300-Wye
"	"	5	0	12 "		200-W

Date	Doc. No.	300 Luggers	325 Luggers	Concrete Barrels	Remote Containers	Burial Ground
6/64	HW-83445	21	4	10 "	89	300-Wye
"	"	7	0	9 "		200-W
7/64	HW-83820	33	7	0 "	96	300-Wye
"	"	7	0	9 "		200-W
8/64	HW-84291	47	7	10 "	75	300-Wye
"	"	6	0	0 "		200-W
9/64	HW-84474	45	6	6 "	83	300-Wye
"	"	7	0	12 "		200-W
10/64	HW-84529	68	23	0 "	82	300-Wye
"	"	5	0	6 "		200-W

APPENDIX G

DISPOSAL DATA OBTAINED FROM PNL 300 AREA RADIATION SURVEY RECORDS

Month & Year	Jan-65	Box #	17950		
Materials Sent to the 300Y Burial Grounds					Volume
Date	Survey Record	No. of Cont.	Type of Container	Generator	(cu.m)
3	00820		Lugger	327	2.83
3	00816		Lugger	327	2.83
4	00817	2 ea	Gatling Gun Cask	327	0.0113
4	605489		Lugger	327	2.83
5	605498		Large Can Cask	325-A	0.0566
6	605506	2 ea	Hot Cell Cask	325	0.019
6	605503	3 ea	Milk Pail Cask	325	0.006
7	605510		Milk Pail Cask	327	0.006
11	605521	1 ea	Hot Cell Cask	325-B	0.0094
11	605521		Hot Cell Cask (Paint Can)	325-B	0.0094
11	605521		Lugger		2.83
11	605521	1 ea	Lugger	325-B	2.83
12	605525	1 ea	Large Can Cask	325-A	0.0566
12	605525	1 ea	Lugger	325-A	2.83
13	605529		Milk Pail Cask	327	0.006
14	605521		Hot Cell Cask	325-A & B	0.019
14	605536		Lugger	327	2.83
14	605536		Milk Pail Cask	327	0.006
18	605536	2 ea	Hot Cell Cask	325-A	0.019
19	605545	1 ea	Milk Pail Cask		0.006
20	605556	1 load	Gatling Gun Cask	327	0.0113
20	605556	3 loads	Large Can Cask		0.0566
20	605556	5 ea	Milk Pail Cask		0.006
21	605561	8 ea	Milk Pail Cask	327	0.006
25	605568	2 ea	Lugger		2.83
25	605568		Milk Pail Cask	327	0.006
27	605577		Hot Cell Cask	325-A	0.019
27	605577	1 ea	Lugger		2.83
27	605577		Milk Pail Cask	327	0.006
28	505581		Hot Cell Cask	325	0.019
29	605585	1 ea	Lugger		2.83

Month & Year	Feb-65	Box #	17950		
Materials Sent to the 300Y Burial Grounds					Volume
Date	Survey Record	No. of Cont.	Type of Container	Generator	(cu.m)
1	605590		Lugger		2.83
2	605595		Hot Cell Cask	325-A	0.019
2	605595		Lugger	3732	2.83
3	30060	1 ea	Lugger	3732	2.83
3	30060	1 ea	Lugger	327	2.83
3	30060	8 ea	Milk Pail Cask	327	0.006

Month & Year	Feb-65	Box #	17950		
Materials Sent to the 300Y Burial Grounds					Volume
Date	Survey Record	No. of Cont.	Type of Container	Generator	(cu.m)
3	30060	1 ea	Truck Load Waste Drum	313	6.64
4	134		Hot Cell Cask	325-A	0.019
4	605649	1 ea	Lugger	325-A	2.83
4	605649		Milk Pail Cask	327	0.006
4	605649	1 ea	Truck Load Thorium Waste Drum	313	6.64
5	601075	1 ea	Lugger	3730	2.83
5	605609	1 ea	Lugger	3706	2.83
5	605609	2 ea	Lugger	3732	2.83
5	605609		Truck Load Thorium Waste Drum	313	6.64
8	150		Box, Plywood	325-B	3.624556
8	605618		Gatling Gun Cask	327	0.0113
8	605619	2 ea	Lugger	327	2.83
9	153	1 ea	Lugger	340	2.83
9	155	1 ea	Lugger (Pu Waste)	325 (530)	2.83
11	605643	1 ea	Lugger	327	2.83
11	605643	8 ea	Milk Pail Cask	327	0.006
11	605643	1 ea	Truck Load	327	6.64
12	183	1 ea	Lugger	340	2.83
12	605647		Milk Pail Cask	327	0.006
15	605657		Hot Cell Cask	325-A	0.019
15	605657	2 ea	Lugger	327	2.83
16	194		Box, Plywood	325-B	3.624556
17	605666		Hot Cell Cask	325-A	0.019
19	605675		Hot Cell Cask	325-A	0.019
23	605690		Milk Pail Cask	327	0.006
24	605690		Milk Pail Cask	327	0.006
25	605695		Waste - No More Data	325	Waste - No More Data
26	900995		Lugger	329	2.83

Month & Year	Mar-65	Box #	17950		
Materials Sent to the 300Y Burial Grounds					Volume
Date	Survey Record	No. of Cont.	Type of Container	Generator	(cu.m)
1	30011/30013	2 ea	Box, Plywood (Filter) Leadlined	327	3.624556
1	30013	1 ea	Gatling Gun Cask	327	0.0113
2	30014		Hot Cell Cask	325-A	0.019
2	30014	8 ea	Milk Pail Cask	327	0.006
3	000009		Lugger (Hot Waste)	3730	2.83
3	30017		Milk Pail Cask	327	0.006
3	000010		Truck Load (Thoria Drums)	321	6.64
4	30014	1 ea	Lugger (Thoria Waste)	3732	2.83
5	30024		Lugger	327	2.83

Month & Year	Mar-65	Box #	17950		
Materials Sent to the 300Y Burial Grounds					Volume
Date	Survey Record	No. of Cont.	Type of Container	Generator	(cu.m)
5	30027	1 ea	Lugger (Al & Si)	313	2.83
9	000056		Hot Cell Cask	325-B	0.0094
9	30033		Lugger	327	2.83
9	30033	5 ea	Milk Pail Cask	327	0.006
10	000058		Hot Cell Cask	325-A	0.019
10		5 ea	Milk Pail Cask	327	0.006
11	000066		Hot Cell Cask	325-A	0.019
12	30047	4 ea	Lugger	327	2.83
15	30057	9 ea	Milk Pail Cask	327	0.006
16	30060		Wrapped Filter	325-A	Wrapped Filter
18	30071	1 ea	Gatling Gun Cask (5 R/hr)	327	0.0113
18	30071	1 ea	Lugger	3706	2.83
22	30077	1 ea	Lugger	3732	2.83
23	30079	1 ea	Lugger	3732	2.83
23	30082	1 ea	Lugger	327	2.83
24	30088		Milk Pail Cask	327	0.006
25	30091	1 ea	Lugger	3732	2.83
25			Lugger (Graphite Boat)	3730	2.83
25	30091		Lugger (Hot Shop Waste)	3730	2.83
26	30097	1 ea	Lugger	329	2.83
29	30104	2 ea	Milk Pail Cask	327	0.006
30	30112		Lugger	3706	2.83
30	30112	1 ea	Lugger (0.5 R/hr)	327	2.83
31	000117	1 ea	Milk Pail Cask	327	0.006

Month & Year	Apr-65	Box #	17950		
Materials Sent to the 300Y Burial Grounds					Volume
Date	Survey Record	No. of Cont.	Type of Container	Generator	(cu.m)
1	000048		Lugger	326	2.83
2	124	1 ea	Gatling Gun Cask	327	0.0113
7	139		Milk Pail Cask	327	0.006
7	142	1 ea	* Lugger (w/ 2 CWS Filter)	325	2.83
12	154		Milk Pail Cask	327	0.006
13	157		Hot Cell Cask	325-A	0.019
13	158		Hot Cell Cask	325-A	0.019
14	162	1 ea	Hot Cell Cask	325-A	0.019
14	162		Milk Pail Cask	327	0.006
14	170		* Hot Cell Cask	325-A/ 603	0.019
15	165	3 ea	Hot Cell Cask	325-A	0.019
15	165	1 ea	Lugger	3706	2.83
16	168		Hot Cell Cask	325-A	0.019

Month & Year	Apr-65	Box #	17950		
Materials Sent to the 300Y Burial Grounds					Volume
Date	Survey Record	No. of Cont.	Type of Container	Generator	(cu.m)
16	168	1 ea	Lugger	3732	2.83
16	168	1 ea	Lugger	327	2.83
16	168	1 ea	Lugger	329	2.83
19	173		Lugger	3718	2.83
19	173		Milk Pail Cask	327	0.006
19	188	2 ea	* Lugger	328	2.83
19	188	1 ea	* Lugger (Pu Waste)	325/ 530	2.83
20	178		Gatling Gun Cask	327	0.0113
20	178	2 ea	Hot Cell Cask	325-A & B	0.019
20	195	7 ea	* Hot Cell Cask	325-B	0.019
22	179	1 ea	Lugger	3706	2.83
22	179		Milk Pail Cask	327	0.006
23	191	2 ea	Truck Load (Drums)	327	6.64
26	195		Lugger	327	2.83
27	199		Hot Cell Cask	325-B	0.0094
27	199		Hot Cell Cask	325-A	0.019
27	223	7 ea	* Hot Cell Cask	325-B	0.019
30	209	7 ea	Hot Cell Cask	325-A	0.019
30	209	1 ea	Lugger	3706	2.83
30	209	1 ea	Lugger	309	2.83
30	209	1 ea	Truck (Minor Construckion Debris)	309	6.64
30	17238		* Lugger (Pu Waste Carton)	325/530	2.83
* Note: Box # 17952					

Month & Year	May-65	Box #	17950		
Materials Sent to the 300Y Burial Grounds					Volume
Date	Survey Record	No. of Cont.	Type of Container	Generator	(cu.m)
3	17250		* Lugger, High Beta/ Gamma		2.83
4	00076		Lugger	329	2.83
4	00217		Lugger	327	2.83
5	00221		Milk Pail Cask	327	0.006
6	00224		Milk Pail Cask	327	0.006
10	00230		Lugger	325	2.83
10	00230		Milk Pail Cask	327	0.006
10	RSR	2 ea	* Wooden Boxes		1.812278
10	RSR	4 ea	* Lugger		2.83
10	17310		* Lugger (Waste Carton to 200 Area)	325/530	2.83
10	17286	2 ea	* Wooden Boxes (C-Cell)	325-A	1.812278
11	00232		Lugger	327/3706	2.83
12	00242		Milk Pail Cask	327/309	0.006
13	00091		Lugger	326	2.83

Month & Year	May-65	Box #	17950		
Materials Sent to the 300Y Burial Grounds					Volume
Date	Survey Record	No. of Cont.	Type of Container	Generator	(cu.m)
17	00250		Gatling Gun Cask	327	0.0113
17	00249		Lugger	327	2.83
18	00094		Lugger	329	2.83
19	00263		Hot Cell Filter	327	0.019
19	00263		Milk Pail Cask	327	0.006
20	00268		Lugger	327	2.83
24	00275		Lugger	3707-C	2.83
24	00275		Milk Pail Cask	327	0.006
25	00281		Gatling Gun Cask	327	0.0113
25	00281		Lugger	3707-C	2.83
25	302264		Lugger	3707-C	2.83
25	00284		Lugger	3732	2.83
28	00115		Lugger	329	2.83
* Note: Box # 17952					

Month & Year	Jun-65	Box #	17950		
Materials Sent to the 300Y Burial Grounds					Volume
Date	Survey Record	No. of Cont.	Type of Container	Generator	(cu.m)
1	00291		Milk Pail Cask	327	0.006
3	00296		Lugger	327	2.83
3	00385		* Hot Cell Cask	325-B	0.019
7	00301		Lugger	327	2.83
7	00385		Milk Pail Cask	327	0.006
7	00401		* Hot Cell Cask	325-A	0.019
7	00391		* Lugger	325	2.83
8	00386	2 ea	Lugger	327/3732	2.83
8	00303		Milk Pail Cask	325-B	0.006
8	00303		Milk Pail Cask	325-A	0.006
8	00400		* Lugger (Pu Waste)	603/325	2.83
9	00308	8 ea	Milk Pail Cask	327	0.006
9	00405		* Lugger	325	2.83
10	00318	6 ea	Hot Cell Cask	325-B	0.0094
10	00318	2 ea	Lugger	325-B	2.83
11	00127		Lugger	321	2.83
14	00356		Lugger	3732	2.83
15	00322		Lugger	327	2.83
16	00327	2 ea	Lugger	329/305	2.83
16	00327	8 ea	Milk Pail Cask	327	0.006
16	00425		* Hot Cell Cask	325-A	0.019
18	00362		Lugger	327	2.83
21	00340		CWS Filter	327	CWS Filter

Month & Year	Jun-65	Box #	17950		
Materials Sent to the 300Y Burial Grounds					Volume
Date	Survey Record	No. of Cont.	Type of Container	Generator	(cu.m)
21	00340		Gatling Gun Cask	327	0.0113
22	00343		Gatling Gun Cask	327	0.0113
22	00343		Lugger	327	2.83
22	00441		* Lugger	325	2.83
23	00347	8 ea	Milk Pail Cask	327	0.006
24	00351		Lugger	3732	2.83
25	00355	4 ea	Lugger	327	2.83
25	00355	7 ea	Milk Pail Cask	327	0.006
28	00361		Hot Cell Cask & Step Plug & Filter	327	0.019
28	RSR	28 ea	* Concreted Rad Boxes (JAJ)	3704	0.764555
29	00362		Gatling Gun Cask	327	0.0113
30	00368		Lugger	3707-C	2.83
* Note: Box # 17952					

Month & Year	Jul-65	Box #	17950		
Materials Sent to the 300Y Burial Grounds					Volume
Date	Survey Record	No. of Cont.	Type of Container	Generator	(cu.m)
1	00369		Lugger	3707-C	2.83
1	00371		Truck Load - Drums	1171	6.64
6	00364		Lugger	327	2.83
9	482		* Lugger		2.83
12	00396		Unknown - Assume Cell Cask	325-B	Unknown - Assume Cell Cask
12	485		* Hot Cell Cask		0.019
14	605405	32 ea	Truck, Drums - Be	333	6.64
14	00405		Hot Cell Cask	325-B	0.0094
14	605405		Lugger	309	2.83
14	00405		Lugger	325	2.83
14	605405		Milk Pail Cask	327	0.006
19			Lugger	329	2.83
20	605417	3 ea	Gatling Gun Cask	327	0.0113
20	605417		Lugger	329	2.83
21	605422		Lugger	327	2.83
21			Lugger	3730	2.83
21	605422		Milk Pail Cask	327	0.006
22	605424		Gatling Gun Cask	327	0.0113
22	605424		Hot Cell Cask	325-A	0.019
22			Hot Cell Cask	325-A	0.019
22	605424		Lugger		2.83
23	605425		Lugger		2.83
25			* Hot Cell Cask		0.019

Month & Year	Jul-65	Box #	17950		
Materials Sent to the 300Y Burial Grounds					Volume
Date	Survey Record	No. of Cont.	Type of Container	Generator	(cu.m)
26	605524	2 ea	Lugger		2.83
26	605435	7 ea	Milk Pail Cask		0.006
26	605435	3 ea	Milk Pail Cask (5 Gal Can)		0.006
26			* Hot Cell Cask		0.019
26			* Large Can Cask		0.0566
26	605436		* Large Can Cask		0.0566
27	30446		Lugger (Floor Tile)	313	2.83
27	605440	7 ea	* Gatling Gun Cask		0.0113
27			* Large Can Cask		0.0566
28	226		* Milk Pail Cask		0.006
29	30442	6 ea	Hot Cell Cask	325-B	0.0094
29	17534	7 ea	Hot Cell Cask	325-B	0.0094
29	17527		Hot Cell Cask & 2 Pump	325-A	0.019
29	30442	3 ea	Large Can Cask	325-A	0.0566
29	30442	2 ea	Lugger	3732 &327	2.83
29			* Large Can Cask		0.0566
29			* Large Can Cask		0.0566
30	17531		Hot Cell Cask	325-A	0.019
30	30449	3 ea	Hot Cell Cask	325-A	0.019
30		3 ea	* Large Can Cask		0.0566
* Note: Box # 17952					

Month & Year	Aug-65	Box #	17950		
Materials Sent to the 300Y Burial Grounds					Volume
Date	Survey Record	No. of Cont.	Type of Container	Generator	(cu.m)
2	30476		Hot Cell Cask	325-A	0.019
2	30476		Lugger	327	2.83
4	30453	1 ea	Milk Pail Cask	327	0.006
5	30467		Lugger	327	2.83
5	30463		Milk Pail Cask	327	0.006
6	30467		Lugger	3732	2.83
11	30473	3 ea	Lugger	327	2.83
11	30473	3 ea	Lugger	327	2.83
11	30473	8 ea	Milk Pail Cask	327	0.006
11	30473	8 ea	Milk Pail Cask	327	0.006
13	30476		Hot Cell Cask	325-B	0.0094
13	30476		Hot Cell Cask	325-B	0.0094
13	30476		Hot Cell Cask	325-B	0.0094
16	30487	2 ea	Milk Pail Cask	327	0.006
18	30489	2 ea	Milk Pail Cask	327	0.006
24	30502		Hot Cell Cask	325-A	0.019

Month & Year	Aug-65	Box #	17950		
Materials Sent to the 300Y Burial Grounds					Volume
Date	Survey Record	No. of Cont.	Type of Container	Generator	(cu.m)
24	17601		* Hot Cell Cask	325-A	0.019
25	30505		Lugger	---------	2.83
25	30505	8 ea	Milk Pail Cask	327	0.006
30	513		* Hot Cell Cask	325-A	0.019
30	17619		* Lead Glass Window	325-A	0.5663
31	515		* Hot Cell Cask	325-A	0.019
* Note: Box # 17952					

Month & Year	Sep-65	Box #	17950		
Materials Sent to the 300Y Burial Grounds					Volume
Date	Survey Record	No. of Cont.	Type of Container	Generator	(cu.m)
1	30519		Milk Pail Cask	327	0.006
7	30529		Lugger	327	2.83
8	30531		Milk Pail Cask	327	0.006
9	30533		Milk Pail Cask	327	0.006
10	30565		Lugger	327	2.83
11	30565		Box, Plywood - 2" lead shield	327	3.624556
13	30537	2 ea	Lugger	329 & 327	2.83
14	30543		Hot Cell Cask	325-A	0.019
14	30539	2 ea	Lugger	327 & 325	2.83
14	30543		Lugger	325	2.83
14	30539		Milk Pail Cask	327	0.006
14	17664		* Hot Cell Cask	325-A	0.019
15	17668		* Hot Cell Cask	325-A	0.019
16	17669		* Lead Burial Can (Hot Zr) - 5 Gal	325-A	* Lead Burial Can (Hot Zr) - 5 Gal
16	17671/673		* Truck Load - Contaminated Equipment	325/530	6.64
21	30554		Hot Cell Cask	325-A	0.019
21	17690		* Hot Cell Cask	325-A	0.019
22	30556	1 ea	Hot Cell Cask	327 & 325	0.019
22	30556	1 ea	Milk Pail Cask	327 & 325	0.006
23	30561	4 ea	Hot Cell Cask	325-A	0.019
23	30561	2 ea	Lugger	325	2.83
27	30569		Milk Pail Cask	327	0.006
28	30572		Hot Cell Cask	325-B	0.0094
29	30610		Lugger	3732	2.83
30	30576	1 ea	Hot Cell Cask	325-A & 327	0.019
ote: Box # 17952					

Month & Year	Oct-65	Box #	17950		
Materials Sent to the 300Y Burial Grounds					Volume
Date	Survey Record	No. of Cont.	Type of Container	Generator	(cu.m)

4	30582		Milk Pail Cask	327	0.006
5	30584		Gatling Gun Cask	327	0.0113
8	30637		Lugger		2.83
8	30637		Milk Pail Cask	327	0.006
11	30638		Lugger	3732	2.83
12	30593		Gatling Gun Cask	327	0.0113
13	30596	2 ea	Lugger	327 & 309	2.83
13	30596		Milk Pail Cask	327	0.006
15	30605			325 & 3706	
15	30605	7 ea	Milk Pail Cask	327	0.006
15	30605	2 ea	Trucks (Dump)		6.64
15	17767		* Lugger	325	2.83
18	3722		** Hot Cell Cask	325-B	0.019
19	30612		Hot Cell Cask	325-B	0.019
19	17777	3 ea	Hot Cell Cask	325-B	0.019
19	30612	3 ea	Lugger		2.83
19	30611		Lugger	327	2.83
20	30617		Hot Cell Cask	325-A	0.019
20	17784		Hot Cell Cask & Filter	325-A	0.019
20	30617		Milk Pail Cask	327	0.006
21	30623		Hot Cell Cask	325-A	0.019
21	30623		Milk Pail Cask	327	0.006
25	30630		Hot Cell Cask	325-A	0.019
27	30635	3 ea	Hot Cell Cask	325-A	0.019
27	17802	3 ea	Hot Cell Cask	325-A	0.019
27	30635		Lugger		2.83
27	30635	7 ea	Milk Pail Cask	327	0.006
28	30640	7 ea	Milk Pail Cask	327	0.006
31	RSR		** Truck Load Equip - Drying Oven, Grinder, Mixer	308	5.66
* Note: Box # 17952					
** Note: Box # 17947					

Month & Year	Nov-65	Box #	17950		
Materials Sent to the 300Y Burial Grounds					Volume
Date	Survey Record	No. of Cont.	Type of Container	Generator	(cu.m)
2	00321		Lugger	329	2.83
3	000649		Hot Cell Cask	325-A	0.019
3	000649		Lugger (Pu Waste)	325	2.83
4	000657		Gatling Gun Cask	327	0.0113
4	000657		Lugger (Filters)	327	2.83
5	000658		Milk Pail Cask	327	0.006
8	000665		Flatbed Truck (Drums?)	306	6.64
8	000661		Lugger	3732	2.83
8	000665		Lugger	309	2.83

Month & Year	Nov-65	Box #	17950		
Materials Sent to the 300Y Burial Grounds					Volume
Date	Survey Record	No. of Cont.	Type of Container	Generator	(cu.m)
9	000675		Milk Pail Cask	327	0.006
10	000677		Lugger	3732	2.83
10	000677		Milk Pail Cask	327	0.006
11	000681		Lugger	327	2.83
12	000686		Lugger	3732	2.83
12	000329		Lugger	329	2.83
15	000705	2 ea	Lugger	327	2.83
15	000705	2 ea	Lugger	---------	2.83
15	000705	9 ea	Milk Pail Cask	327	0.006
17	000708	4 ea	Lugger	---------	2.83
17	000708	9 ea	Milk Pail Cask	327	0.006
19	000714		Truck (Flatbed - Drum?)	3732	6.64
22	000718		Milk Pail Cask	327	0.006
24	000724		Milk Pail Cask	327	0.006
30	000740	8 ea	Hot Cell Cask	325-B	0.0094
30	000740	1 ea	Lugger	325	2.83

Month & Year	Dec-65	Box #	17950		
Materials Sent to the 300Y Burial Grounds					Volume
Date	Survey Record	No. of Cont.	Type of Container	Generator	(cu.m)
1	000747	1 ea	Lugger	327	2.83
1	000747	8 ea	Milk Pail Cask	327	0.006
3	000748	3 ea	Gatling Gun Cask	327	0.0113
3	000748	3 ea	Lugger	---------	2.83
6	000767		Lugger	---------	2.83
7	000768		Lugger (Special Hot One)	309	2.83
8	000769		Milk Pail Cask	327	0.006
9	000770		Gatling Gun Cask	327	0.0113
9	000770		Lugger	327	2.83
12			Truck - Contaminated Dirt & Waste Carton	3732	6.23
13	000776		Truck - Semi (Load) Equip. & Drums?	325-A	6.64
14	000779		Lugger	---------	2.83
15	000783		Lugger	327	2.83
15	000783		Milk Pail Cask	327	0.006
16	17961	1 ea	Hot Cell Cask	325-B	0.0094
17	000789		Gatling Gun Cask	327	0.0113
17	000788		Hot Cell Cask	325-B	0.0094
17	000788		Lugger	325	2.83
21	000798	2 ea	Lugger	---------	2.83
21	000797		Lugger	327	2.83
21	000797		Milk Pail Cask	327	0.006

Month & Year	Dec-65	Box #	17950		
Materials Sent to the 300Y Burial Grounds					Volume
Date	Survey Record	No. of Cont.	Type of Container	Generator	(cu.m)
21	000802		Truck Load Scrap Metal - Uranium Container	333	6.64
23	000804	8 ea	Milk Pail Cask	327	0.006
27	000805		Milk Pail Cask	327	0.006
29	000809		Lugger	1171	2.83

Month & Year	Jan-66	Box #	17948		
Materials Sent to the 300Y Burial Grounds					Volume
Date	Survey Record	No. of Cont.	Type of Container	Generator	(cu.m)
5	00825		Milk Pail Cask	327	0.006
6	30893		Lugger	327	2.83
12	00839		Milk Pail Cask	327	6.5
12			Truck (Plywood & Plexiglass)	325/603	6.64
14	00840		Gatling Gun Cask	327	0.0113
14	00841		Truck - Concrete Drums	327	6.64
17	00844		Lugger	327	2.83
17	00844		Milk Pail Cask	327	0.006
18	00847		Milk Pail Cask	325-B	0.006
19	00844		Lugger	327	2.83
19	30923		Lugger	303-J	2.83
20	00855		Milk Pail Cask	327	0.006
21	00862		Lugger	3732	2.83
24	00863		Lugger	327	2.83
25	00870	2 ea	Cask - Graphite Waste	327	Cask - Graphite Waste
25	00871		Lugger	3706	2.83
25	00871		Lugger	3732	2.83
26	00872		Milk Pail Cask	327	0.006
27	00877	1 ea	Lugger	327	2.83
27	00877	7 ea	Milk Pail Cask	327	0.006
28	00897		Gatling Gun Cask	327	0.0113

Month & Year	Feb-66	Box #	17948		
Materials Sent to the 300Y Burial Grounds					Volume
Date	Survey Record	No. of Cont.	Type of Container	Generator	(cu.m)
1	00881	2 ea	Gatling Gun Cask	327	0.0113
3	1088		* Lugger - 3 R/hr	325	2.83
4	00886		Lugger	327/329	2.83
4	RSR		* Lugger	329	2.83
8	00897		Gatling Gun Cask	327	0.0113
14	30973		* Lugger	3732	2.83
14	00905		* Lugger	3707-C	2.83
15	RSR		Furnace	326	0.283

Month & Year	Feb-66	Box #	17948		
	Materials Sent to the 300Y Burial Grounds				Volume
Date	Survey Record	No. of Cont.	Type of Container	Generator	(cu.m)
16	00908		Lugger	3732	2.83
16	00908	7 ea	Milk Pail Cask	327	0.006
17	30980		Lugger	3732	2.83
20	00914		Lugger	327	2.83
21	30960		Truck Load - Construction Debris	327	8.5
23	00923		Milk Pail Cask	327	0.006
24	00925		Large Can Cask, 25 Ton	309	0.0566
24	00924		Large Can Cask, 25 Ton	309	0.242
24	00925		Hot Cell Cask	325-B	0.019
24	00924		Lugger	327/329	2.83
24	00925		Lugger	327/325	0.242
24	00924		Milk Pail Cask	327	0.006
25	1148		* Lugger, CWS Filters	325	2.83
28	00931	2 ea	Gatling Gun Cask	327	8.5
28	00931	3 ea	Lugger	327	2.83
28	1154	1 ea	* Truck, Minor Construction Debris	325	6.64
* Note: 17949					

Month & Year	Mar-66	Box #	17948		
	Materials Sent to the 300Y Burial Grounds				Volume
Date	Survey Record	No. of Cont.	Type of Container	Generator	(cu.m)
1	00932		Lugger	327	2.83
7	00955		Milk Pail Cask	327	0.006
8	00956		Lugger	325-B	2.83
8	1183		* Concreted Drums (Pu)	325	0.764555
8	1185	6 ea	* Hot Cell Cask	325-B	0.019
8	1184		* Lugger - 5.6 R/Hr	325	2.83
9	00957		Lugger	309	2.83
11	00958		Lugger	309	2.83
14	00965		Lugger	327	2.83
14	00965		Milk Pail Cask	327	0.006
14			* Lugger	325	2.83
15	00967		Hot Cell Waste	325-A	0.019
16	00972		Milk Pail Waste	327	0.006
17	00973		Milk Pail Waste	327	0.006
23	00984		Lugger	327	2.83
24	00988		Lugger	327	2.83
24	00988		Milk Pail Cask	327	7.65
24	RSR		* Dump Truck Load - Dirt	340	* Dump Truck Load - Dirt
25	1235		* Dump Truck Load - Dirt	340	* Dump Truck Load - Dirt

Month & Year	Mar-66	Box #	17948		
Materials Sent to the 300Y Burial Grounds					Volume
Date	Survey Record	No. of Cont.	Type of Container	Generator	(cu.m)
29	01000		Hot Cell Cask	325-A	0.019
29	01000		Lugger	327	2.55
29	1243		* Large Can Cask	325	0.0566
29			* Lugger	325	2.83
30	1248		* Large Can Cask	325	0.0566
* Note: 17949					

Month & Year	Apr-66	Box #	17948		
Materials Sent to the 300Y Burial Grounds					Volume
Date	Survey Record	No. of Cont.	Type of Container	Generator	(cu.m)
4	1272		* Lugger	325	2.83
4	1273		* Lugger	325	2.83
6	31060		Milk Pail Cask	327	0.006
6	01015		Truck Load, Drums	333	6.64
7	01025		Truck - Small Cans (15 Gal)	325	1.54
7	01021		Truck Load, 35 Gallon Drums	333/3036	12.4
7	01022		Truck Load, 55 Gallon Drums	333	6.64
12	01025	4 ea	Large Can Cask	325-A	0.0566
13	01028		Milk Pail Cask	327	0.006
15	01028		Lugger	327	2.83
15	01030		Lugger	325	2.83
18	01033		Lugger	327	2.83
21	01043		Milk Pail Cask	327	0.006
22	01044		Lugger	327	2.83
23	01045		Lugger	320	2.83
28	RSR		* Lugger	340	2.83
* Note: 17949					

Month & Year	May-66	Box #	17948		
Materials Sent to the 300Y Burial Grounds					Volume
Date	Survey Record	No. of Cont.	Type of Container	Generator	(cu.m)
2	1061		Gatling Gun Cask	327	0.0113
4	1063		Milk Pail Cask	327	0.006
5			Hot Cell Cask	327	0.019
5	1406		Lugger	325-Anal.	2.83
6	1412		Lugger	325	2.83
9	1067	6 ea	Milk Pail Cask	327	0.006
11	1068		Lugger	327	2.83
11	1070	7 ea	Milk Pail Cask	327	0.006
12	1071	2 ea	Lugger	309/326	2.83
12	1430		* Lugger - Hot CWS Filters	325	2.83
12	1427		* Truck Load - Drums	325	6.64

Month & Year	May-66	Box #	17948		
Materials Sent to the 300Y Burial Grounds					Volume
Date	Survey Record	No. of Cont.	Type of Container	Generator	(cu.m)
13	RSR		* Lugger - Pu Sources	325-Anal.	2.83
17	1079		Hot Cell Cask	325-Anal.	0.019
17	1447		* Hot Cell Cask	325-B	0.019
18	1080		Hot Cell Cask (Small)	309	0.019
19	1082	2 ea	Glove Boxes	380	Glove Boxes
19	1082	3 ea	Hot Cell Cask	325-B	0.0094
19	1082		Lugger	308	2.83
19	1461		* Lugger	325	2.83
20	1083		Hot Cell Cask	325-A	0.019
20	1083		Lugger	327	2.83
23	1084		Lugger	309	2.83
24	1469		* Lugger - 3.6 R/Hr	325	2.83
26	1092	3 ea	Hot Cell Cask	325-B	0.0094
26	1092	1 ea	Milk Pail Cask	327	0.006
26	1476	6 ea	* Hot Cell Cask	325-B	0.019
31			* Lugger	325	2.83
* Note: 17949					

Month & Year	Jun-66	Box #	17948		
Materials Sent to the 300Y Burial Grounds					Volume
Date	Survey Record	No. of Cont.	Type of Container	Generator	(cu.m)
1	RSR		Lugger	321	2.83
1			Lugger	333	2.83
1	01098		Milk Pail Cask	327	0.006
1	01099		Truck Load - Drums	333	6.64
1			Truck Load (13 Drums Be Scrap)	333	6.64
1	452		* Lugger	329	2.83
2	1492		* Hot Cell Cask	325	0.019
3	1499		* Lugger - CWS Filters	325	2.83
7			Concrete Anchor	3707-C	0.283
14	RSR		* Spent Equipment - Duct & Filter	325	0.736
17	01117		Lugger	327	2.83
20	01133		Hot Cell Cask	325-A	0.019
20	01133		Milk Pail Cask	327	0.006
21	01134		Hot Cell Cask	325-A	0.019
21	01134		Milk Pail Cask	327	0.006
22	RSR	9 ea	Lugger, Waste Cartons (Floor Tile)	3706	2.83
22	482		* Lugger	329	2.83
22	1543		* Lugger	325	2.83
27	1144	12 ea	Milk Pail Cask	327	0.006
28	1145	5 ea	Milk Pail Cask	327	0.006

Month & Year	Jun-66	Box #	17948		
Materials Sent to the 300Y Burial Grounds					Volume
Date	Survey Record	No. of Cont.	Type of Container	Generator	(cu.m)
28	1146	8 ea	Milk Pail Cask	327	0.006
e: 17949					

Month & Year	Jul-66	Box #	17948		
Materials Sent to the 300Y Burial Grounds					Volume
Date	Survey Record	No. of Cont.	Type of Container	Generator	(cu.m)
1	1152		Lugger - 0.3 R/Hr	327	2.83
7	1160		Lugger	3707-C	2.83
7	1160	4 ea	Milk Pail Cask	327	0.006
11	2864		Large Can Cask	327	0.0566
11	2864		Larger	327	0.0566
12	1161		Lugger	329	2.83
14	2877		Lugger	327	2.83
14	2878		Milk Pail Cask	327	0.006
14	2875	6 ea	Milk Pail Cask	327	0.006
18	2890	7 ea	Milk Pail Cask	327	0.006
18	2893	6 ea	Milk Pail Cask	327	0.006
21	2915	7 ea	Milk Pail Cask	327	0.006
25	2924		Cell Equipment	327	Cell Equipment
25	2927		Tubes	327	0.566
26		1 ea	Lugger (Hot Waste)	329	2.83
26	2934	6 ea	Milk Pail Cask	327	0.566
26	2932		Spent Tubes & Pieces	327	Spent Tubes & Pieces
28	2952		Lugger	303-J	2.83
28	2949		Milk Pail Cask	327	0.006

Month & Year	Aug-66	Box #	17948		
Materials Sent to the 300Y Burial Grounds					Volume
Date	Survey Record	No. of Cont.	Type of Container	Generator	(cu.m)
1	1180		Lugger	327	2.83
2	2959		Milk Pail Cask	327	0.006
4	2984		Tubes & Elements	327	2.83
8	1648		* Hot Cell Cask	325-A	0.019
9	494		* Lugger	329	2.83
11	3018		Milk Pail Cask	327	0.006
11		5 ea	* Lugger	324	2.83
11		4 ea	* Lugger	529	2.83
10	01645		* Furnace & Controller	325	0.283
10	01646		* Furnace & Controller	325	0.283
16	RSR		* Lugger 0.5 R/hr	3730	2.83

Month & Year	Aug-66	Box #	17948		
Materials Sent to the 300Y Burial Grounds					Volume
Date	Survey Record	No. of Cont.	Type of Container	Generator	(cu.m)
17	502		* Lugger 0.5 R/hr	3730	2.83
19	3031		Lugger	327	2.83
22	3036		Milk Pail Cask	327	0.006
23	3037		Milk Pail Cask	327	0.006
23	3041		Milk Pail Cask	327	0.006
24	01701		Hot Cell Cask	325-B	0.019
18	01673				
26	3060		Milk Pail Cask	327	0.006
30	3064		Milk Pail Cask	327	0.006
30	3065		Large Can Cask	325	0.0566
* Note: 17949					

Month & Year	Sep-66	Box #	17948		
Materials Sent to the 300Y Burial Grounds					Volume
Date	Survey Record	No. of Cont.	Type of Container	Generator	(cu.m)
2		2 ea	* Lugger Broken Concrete	329	2.83
4			* Lugger <5 mR	329	2.83
7	3087		Lugger	329	2.83
7	3092		Lugger	325	2.83
7	3093		Scrap Tubing	327	2.83
7	3094		Scrap Tubing	327	2.83
7	3095		Lugger	327	2.83
8	3096		Gatling Gun Cask	327	0.0113
8	3097		Scrap Tubing	327	2.83
12	3106		Lugger	327	2.83
14	3112		Lugger	327	2.83
22	3138		Milk Pial Cask	327	0.006
22	3139		Lugger	327	2.83
15	01754	2 ea	* Hot Cell Equipment	325-A	0.708
27	01784		* Truck Load - Drums	325-A	6.64
16	01753		* Truck Load - Hot Cel Equipment	325-A	0.708
15	01751		* Truck Load - Hot Cel Equipment	325-A	6.64
14	01749		* Truck Load - Hot Cel Equipment	325-A	6.64
15	RSR		* Lugger	325	2.83
21	517		* Lugger - 0.8 R/hr	325-B	2.83
26	1185		Milk Pail Cask	327	0.006
27	1186		Hot Cell Cask	325-A	0.019
28	1187		Hot Cell Cask	325-A	0.019
28	1188		Truck Load - SS Piping to Drum Storage	ND	2.83
29	RSR		* Lugger - 4 R/hr	3730	2.83
* Note: 17949					

Materials Sent to the 300Y Burial Grounds					Volume
Date	Survey Record	No. of Cont.	Type of Container	Generator	(cu.m)
1	1199		Lugger	329	2.83
1	1199		Lugger	309	2.83
4	1197		Lugger	327	2.83
7	1204		Lugger	309	2.83
10	1208	2 ea	Milk Pail Cask	327	0.006
11	1213		Lugger	327	2.83
12	1217		Milk Pail Cask	327	0.006
13	RSR		Lugger	3706	2.83
17	1258		* Concreted Jugs, Pu	305	0.892
17	1227	2 ea	Lugger	327	2.83
20			* Lugger	327	2.83
20	1242		Lugger	390	2.83
20	1227		* Lugger	327	2.83
21	1244		Lugger - 0.075 R/hr	325	2.83
24	1245		Hot Cell Cask	327	0.031
24	1245		Lugger	329	2.83
24	1245		Lugger	309	2.83
25	RSR		Truck Load - Drums, B, Th	306	6.64
25	1257		Truck of Equipment	306/326	2.83
26			Hot Cell Cask	327	0.031
31	01347		Large Can Cask, Hot Waste	3718	0.0566
31	RSR-PDR		Truck, - Cask, Scrap & Motor	3718	2.83
31	1264		Truck Load of Waste	1171	6.64
31	1264		Lugger	1171	2.83
* Note: 17949					

Month & Year	Nov-96	Box #	17948		
Materials Sent to the 300Y Burial Grounds					Volume
Date	Survey Record	No. of Cont.	Type of Container	Generator	(cu.m)
1	1265		Lugger	327	2.83
2	1269		Dump Truck of 340 Soil	340	Dump Truck of 340 Soil
2	1269	3 ea	Hot Cell Cask	325-A	0.019
2			Large Can Cask	3718	0.0566
2	1266		Milk Pail Cask	327	0.006
2	1269		Truck Load - Equipment	333	6.64
2			Y-12 Bird Cages & 1 Container Waste	3718	0.212
2	01963		* Hot Cell Cask	325-A	0.019
2	RSR		* Lugger	340	2.83
3	1267	12 ea	Birdcage Container From Lab Pool	3718	Birdcage Container From Lab Pool
4	1277		Bury 324 Radiation Probe in Drum Storage Unit	324	0.34

Month & Year	Nov-66	Box #	17948		
Materials Sent to the 300Y Burial Grounds					
Date	Survey Record	No. of Cont.	Type of Container	Generator	Volume (cu.m)
4	1273		Lugger	327	2.83
7	1280		Milk Pail Cask - 2.5 R/hr	327	0.006
8	1281		Lugger	305	2.83
8	1281		Milk Pail Cask - 2.5 R/hr	327	0.006
9	1284		Milk Pail Cask	327	0.006
10	1292		Lugger	329	2.83
11	1294		Hot Cell Cask	324	0.019
11	1293		Lugger	327	2.83
14	1305		Lugger	329	0.0022
14	1305		Lugger	309	2.83
14	RSR		Lugger - Th Waste	325 Basement	2.83
14	1304		Truck Load - Zn Waste	325	6.64
15	1308		Lugger	327	2.83
15	1308		Lugger	309	2.83
15	1307		Truck Load - Boxed Tans	325	2.83
15	RSR	4 ea	* Box, Plywood Boxes	325	3.63
15	02039		* Box, Plywood filled w/Tank	325	3.63
16	RSR		Truck Load - 4 Drum w/ Th & Th/ U Turnings	306	6.64
18	1316		Truck - Th Waste	306	6.64
18	RSR		Truck Load - Lab Equipment	3706	2.83
21	1321		Lugger	327	2.83
21	1320		Zirconium Tubes	327	Zirconium Tubes
22	1320	Truck Load	Milk Pail Cask	327	0.006
23	1329	2 ea	Hot Cell Cask	325-A	0.019
23	1333	2 ea	Hot Cell Cask	325-A	0.019
23	1329		Lugger	309	2.83
23	1329		Lugger	327	2.83
23	1333		Lugger	309	0.198
23	1329		Milk Pail Cask	327	0.006
23	563		* Lugger - Hot Graphite Samples	3730	2.83
29	01336		Hot Cell Cask	327	
29	1338		Lugger	324	
30	1334		Lugger	PRTR	
* Note: 17949					

Month & Year	Dec-66	Box #	17948		
Materials Sent to the 300Y Burial Grounds					
Date	Survey Record	No. of Cont.	Type of Container	Generator	Volume (cu.m)
1	01347		Large Can Cask	3718	0.0566
1	1346		Milk Pail Cask	327	0.006
2	01348		Lugger	3718	2.83

Month & Year	Dec-66	Box #	17948		
Materials Sent to the 300Y Burial Grounds					Volume
Date	Survey Record	No. of Cont.	Type of Container	Generator	(cu.m)
5	02122		Drum w/ Lead Cask	325-A	0.212
7	01366		Hot Cell Cask	325-B	0.019
8	01367		Hot Cell Cask	325-B	0.019
8	110136		Truck		6.64
9	01362		Ballast	325-B	0.566
9	01368		Hot Cell Cask	325-B	0.019
9	02159		Lugger	325	2.83
9	110135		Truck - Drums	1171	6.64
12	01372		Truck - Drums	333	6.64
13	01375	3 ea	Hot Cell Cask	325-A	0.019
13	01375	6 ea	Hot Cell Cask	327	0.019
13	02178		Hot Cell Waste	325-A	0.019
13	02175		Lugger	325	2.83
16	01385		Lugger	309	2.83
16	01385		Lugger	320	2.83
19	01389		Lugger	327	2.83
19	01389		Lugger	329	2.83
22	01404		Lugger	327	2.83
28	01408	2 ea	Lugger	327	2.83
28	01408		Truck	327	6.64
29	01411		Lugger	327	2.83
* Note: 17949					

Year	1965	Box #	17948		
Materials Sent to the 200W Burial Grounds					Volume
Day & Month	Survey Record	No. of Cont.	Type of Container	Generator	(cu.m)
Unknown	RSR	2 ea	Boxes, Pu Contaminated	308	2.83
23-Mar	-98		Lugger - 15 to 60 mR/Hr	325/302	2.83
25-May	-360		Truck - Waste Cartons	325/530	6.64
08-Jun	-398		Truck - Pu Cartons & Pu Drums	325/30	6.64
30-Jul	RSR	3 ea	Truck Loads - Radioactive Equip.	1166	2.83
07-Sep	-640		Lugger	325	2.83
25-Mar	-113		Lugger - 6 mR/Hr	325/302	2.83

Year	1966	Box #	17949		
Materials Sent to the 200W Burial Grounds					Volume
Day & Month	Survey Record	No. of Cont.	Type of Container	Generator	(cu.m)
08-Nov		2 ea	Truck Loads	340	13.28
24-Jun	1547		Lugger	325	2.83
27-May	1477	9 ea	Drums	325	2.68
13-Dec			Furnace	313	0.425

Box No. 13713					
Date	Survey Number	No. of Containers	Type of Container	Generator	Volume (M3)
	641474	1	55 Gallon Drum Contaminated w/oil	Machine Shop	0.21
02/28/65	559016	1	Lugger	309	2.83
04/01/65	650477 (RSR)	1	Lugger	309	2.83
06/14/65	650707 (RSR)	1	Lugger	309	2.83
09/02/65	651001 (RSR)	1	Truck - tank, lights, shovels, pipes, wrench set	309	2.83
09/03/65	651002	1	Lugger	309	2.83
09/14/65	651028	1	Pickup Truck - flux wire	309	3.62
10/11/65	651128	1	Lugger	309	2.83
10/20/65	651192	1	Package Load of Old Equipment	309	3.62
10/28/65	651234	1	Lugger	309	2.83
11/16/65	651339	1	Lugger, Contaminated	309	2.83
12/03/65	651430	1	Lugger - Trash	309	2.83
12/21/65	651572	1	Lugger	324	2.83
01/10/66	660044	1	Lugger	309	2.83
01/10/66	660043	5	Oil Drum	309	
01/14/66	66072	1	Tank Filters	309	0.57
02/02/66	660170	1	Lugger	309	2.83
02/15/66	660262	1	Lugger	320	2.83
02/21/66	660310	1	Lugger	309	2.83
03/02/66	660397	1	25 Ton Cask.	309	0.06
03/08/66	660414	1	Lugger	309	2.83
03/11/66	660450	1	Lead Cask "Junk"	309	0.06
04/27/66	660597	1	Lugger	309	2.83
05/02/66		1	Lugger		2.83
01/11/67	670021	1	Lugger	324	2.83

Box No. 13714					
Date	Survey Number	No. of Containers	Type of Container	Generator	Volume (M3)
01/10/65	ORSR	1	HEPA Filter (Sent to Herm Grey)	309	0.23
01/11/66	ORSR	1	Contaminated Hose Wrapped in Plastic	309	2.83
02/18/66	ORSR	1	Tank Truck Vent Filter	309	0.57
02/24/66	ORSR	1	25 Ton Shipping Cask (Trash)	309	0.06
02/25/66	ORSR	1	25 Ton Shipping Cask (Irradiated Material)	309	0.06

03/03/66	ORSR	1	25 Ton Shipping Cask (Irradiated Scrap)	309	0.06
03/09/66	ORSR	1	25 Ton Shipping Cask (Radioactive Scrap)	309	0.06
03/09/66	ORSR	1	25 Ton Shipping Cask (Radioactive Waste)	309	0.06
03/11/66	ORSR	1	25 Ton Shipping Cask (Irradiated Scrap)	309	0.06
03/16/66	ORSR	1	25 Ton Shipping Cask (Shim Rods) - PRTR (ESD)	309	0.06
04/11/66	670406	1	Lugger	309	2.83
06/06/66	660757	1	Lugger	309	2.83
07/16/66	660767	1	Lugger	309	2.83
09/12/66	ORSR	2	Filters, 1.5 R/hr contact	PRTR (Curtis)	0.11
09/14/66	ORSR	1	Flux Wire	309	0.11
10/07/66	EDS/PRTR	1	Dew Cell Refrigerator, Panel & Piping		
10/21/66	660856	1	Lugger	309	2.83
11/08/66	660897	1	Lugger	309	2.83
11/09/66	660899	1	Lugger	309	2.83
11/09/66	660900	1	Lugger	309	2.83
12/16/66	Routine Survey	1	Boxes for Burial	309	3.62
12/21/66	Routine Survey	12	Lugger	309	2.83
01/23/67	670082	1	Lugger	309	2.83
03/01/67	ORSR	5	Used Oil in Drum (PRTR maintenence)		0.21
03/09/67	670275	1	Lugger	309	2.83
06/12/67	670598	1	Gas Bottle	309	0.08
07/03/67	ORSR	1	Helium Bottle ICC - 3AA2265 (PRTR Maintained)	309	0.08
08/01/67	670728	1	Lugger	309	2.83

Box No. 13716					
Date	Survey Number	No. of Containers	Type of Container	Generator	Volume (M3)
11/11/66	ORSR	1	Cask Probe Holder	324	
03/21/67	670232	2	Filters, "B" Cell	324	0.11
03/23/67	ORSR	1	Wooden box with roughing filter	324	3.62
05/03/67	ORSR	1	Liquid level probe inside lead covered pipe (plastic wrap)	324	0.57
05/10/67	670392	1	Lugger	324	2.83
05/26/67	671446	1	Filters, 107	324	3.62
05/26/67	ORSR	1	Filter, 107, assembly in plywood boxDry waste in garbage cans & wood box	324	4.19

06/22/67	660021	1	Lugger	309	2.83
07/28/67	ORSR	1	Dry waste in garbage cns & wood box	324	2.83
07/28/67	670634 (RSR)	1	Waste Box "B" Cell	324	3.62
09/27/67	ORSR	1	Wooden box	324/PRCF	3.62
10/13/67	670843	1	Hot Wast Box	324	3.62
10/13/67	ORSR	1	Wooden box	324	3.62
10/31/67	ORSR	1	Wooden box	324	3.62
11/10/67	670952	1	Wooden Box, "B" Cell	324	3.62
12/08/67	ORSR	1	Wooden box	324	3.62
12/09/67	671060	1	Wooden Box, Max Dose 2 R/hr	324	3.62
12/10/67	ORSR	1	Scaffolding wrapped in plastic	324	2.83
12/14/67	66015	1	"B" Cell Waste - Lugger/ 2 Cans/ 1 Box	324	"B" Cell Waste - Lugger/ 2 Cans/ 1 Box
12/21/67	671115	1	Wooden Box, "B" Cell	324	3.62
12/22/67	ORSR	1	Solid waste (SST Pipe, screen)	324	2.83
12/28/67	671125	1	Wooden Box, "B" Cell	324	3.62
12/29/67	ORSR	1	"B" Cell - Rod Waste in Box	324	"B" Cell - Rod Waste in Box
09/29/66	* RSR	6	Barrels - Be & U Scrap	333- N Fuels	0.21
07/22/68	** 320-100	4	Waste Jugs	320	2.02
* Note: Box No. 13717					
** Note: Box No. 23509					

APPENDIX H
BATTELLE NORTHWEST LABORATORIES CONTAMINATION INCIDENTS AT HANFORD 1956-1971

APPENDIX H
BATTELLE NORTHWEST LABORATORIES CONTAMINATION INCIDENTS AT HANFORD 1956-1971

Date	Location	Comment
1956		
10/15	near 325	Load lugger
1957		
* 2/7	107F	Tore process line while excavating
* 3/4	327	Contamination spill
* 3/7	108F	P-10 leak (?)
* 3/23	108F	Contamination spread
* 4/12	329	Liquid Spill
* 5/7	1166	Contaminated cask at stores
* 5/9	329	RuDEF spill
* 5/10	329	Pu spill
* 5/21	327	Contamination spread in building
* 5/23	1160	Contaminated cask at stores
* 5/31	321	Fire
* 6/12	1160	Contaminated cast at stores
* 6/19	108F	^{45}Ca spill
* 8/17	3706	Contamination spread

Date	Location	Comment
1958		
* 5/23	329	Contamination spread
* 7/2	108F	Contamination spread
1959		
* 2/17	183-K	Contamination spread
* 10/15	326	Explosion in cell

Date	Location	Comment
1960		
* 1/13	1709D	Contamination spread
* 7/20	325	Pu waste spread
* 10/25	325-A	Contamination spread
* 11/9	3706	Contamination spread (gas)
* 12/8	327	Cask leaked
1961		
* 3/15	327	Cask leaked
* 5/18	306	U fire
* 5/22	3706	Waste burned?
7/4	300N	Fire in building
* 7/29	108F	Pu waste leaked out of carton
8/28	306	Fire
1962		
* 4/10	3730	Irradiated sample exploded
4/10	near 306	Fire in load lugger
8/28	?	Contamination spread (cask)
9/11	327	Contamination spread
10/16	325-A	Liquid spill
* 10/26	308	Fire in hood
1963		
2/12	325	Pm incident
8/5	?	Contamination spread
9/2	618-10 (300N) burial ground	Contamination spread
9/30	618-10 (300N) burial ground	Contamination spread

	Date	Location	Comment
1964			
	3/6	618-11 (Wye) burial ground	Contamination spread
	5/18	618-11 (Wye) burial ground	Contamination spread
	11/1	325-A	?
1965			
	1/14	618-11 (Wye) burial ground	Contamination spread
	2/8	618-11 (Wye) burial ground	Contamination spread
	3/1	618-11 (Wye) burial ground	Contamination spread
	7/15	Near 309	Contamination spread
	10/12	618-11 (Wye) burial ground	?
1966	NONE	NONE	NONE
1967			
	* 2/22	1705F	Fire
	3/23	325-A	Contamination spread
	4/7	618-11 (Wye) burial ground	Contamination spread
	4/14	618-11 (Wye) burial ground	Contamination spread
	6/13	325-307	Contamination spread
	10/17	618-11 (Wye) burial ground	Contamination spread
1968			
	7/25	340	?
	* 9/9	325	Basement flooded

Date	Location	Comment
1969		
* 4/4	near 324	?
* 9/30	325	Contamination leak
* 11/12	324	Contamination spread
12/10	340	Waste spread (see DHD doc.) BNWL-CC-2617
* 12/31	?	Pu
1970		
* 1/20	Burial ground (327)	Fission products
* 1/20	?	?
* 2/12	340, 3719	Fission products (waste)
* 6/15	327	Contamination spread
* 10/13	?	^{3}H
* 12/8	?	Cs-137, Ce-144, Pm contamination spread
1971		
2/3	?	PuO_2
3/13	141C-141N	^{90}Sr ground contaminated

APPENDIX I

WASTE INFORMATION DATA SYSTEM
GENERAL SUMMARY REPORT, VOL. 2
HISS DATABASE, APPENDIX E
JULY 12, 1990

Waste Information Data System
General Summary Report
July 12, 1990

SITE NAME: 618-11 [309]
ALIASES: Y Burial Ground, 318-11 [17]; 300 Wye Burial Ground [309]

SITE TYPE: Burial Ground [309]
WASTE CATEGORY: Pre-1970 TRU [303]
WASTE TYPE: Solid [309]

STATUS: Inactive [309] Pre-1980 [309]
START DATE: March 1962 [17]
END DATE: December 1967 [17]

OPERABLE UNIT: 300-IU-1 [329]
REG. AUTHORITY: Undefined [323]
DOE/RL PROGRAM: Radiation Areas Reduction [358]

DESIGNATED AREA: 600 Area [309]
COORDINATES: N12103 W2561, N12103 W3561, N12478 W2561, N12478 W3561 [309]
LOCATION:
7.5 mi northwest of the 300 Area, directly west of WPPSS 2 [123]

CONTAMINATED SOIL VOLUME: 7,900.00 cubic meters [303]
OVERBURDEN SOIL VOLUME: 18,000.00 cubic meters [303]

GROUND ELEVATION: 430.00 feet above MSL [309]
WATER TABLE DEPTH: 50.00 feet below grade [309]

SITE DIMENSIONS:

Length:	1,000.00	feet [309]
Width:	375.00	feet [309]
Depth:	15.00	feet [309]

SITE DESCRIPTION:
The site composed of three trenches, 54 pipe storage units, and 8 to 10 caissons. The trenches are 900 ft long by 50 ft wide (surface dimensions). The pipe storage units are 22 in. in diameter by 15 ft long, buried vertically, and made by welding five 55-gal drums together. The caissons are 8-ft-diameter corrugated metal pipe, 10 ft long, buried 15 ft below grade, connected to the surface by an offset 36-in.-diameter pipe with a dome type cap [309]. The site perimeter is marked with Identification markers 2-68-1 through 2-68-28 [17].

WASTE TYPES AND AMOUNTS:
The site contains a broad spectrum of low-to-high-level dry wastes, primarily fission products and plutonium. Low-level wastes were buried in the trenches, and high-level wastes were buried in the pipe storage units [123] and caissons [309].

KNOWN RELEASES:
UPR-600-4, UPR-600-5, UPR-600-6, UPR-600-7, UPR-600-8, UPR-600-9, UPR-600-10 [309].

CLEANUP ACTIONS:
The site was surface stabilized in 1983 [317].

Waste Information Data System
General Summary Report
July 12, 1990

SITE NAME: UPR-600-4 [309]
ALIASES: None

SITE TYPE: Unplanned Release [309]
WASTE CATEGORY: Mixed Waste [NR]
WASTE TYPE: Liquid [309]

STATUS: Inactive [309] Pre-1980 [309]
OCCURRENCE DATE: March 6, 1964 [309]

OPERABLE UNIT: 300-IU-1 [329]
REG. AUTHORITY: Undefined [368]

DESIGNATED AREA: 600 Area [309]
COORDINATES: N12103 W2561, N12103 W3561, N12478 W2561, N12478 W3561 [309]
LOCATION: Within the 618-11 Burial Ground [309]

GROUND ELEVATION: 430.00 feet above MSL [309]
WATER TABLE DEPTH: 50.00 feet below grade [309]

SITE DIMENSIONS: **Site Area:** 1,000.00 square feet [309]

WASTE TYPES AND AMOUNTS:
Waste from the High-level Radiochemistry Facility. Readings were up to 10,000 ct/min [309].

KNOWN RELEASES:
Radioactive material blew out of a waste can as it was lowered into the 618-11 Burial Ground [309].

CLEANUP ACTIONS:
The 618-11 Burial Ground was surface stabilized in 1983 [317].

Waste Information Data System
General Summary Report
July 12, 1990

SITE NAME: UPR-600-5 [309]
ALIASES: None

SITE TYPE: Unplanned Release [309]
WASTE CATEGORY: Mixed Waste [NR]
WASTE TYPE: Solid [309]

STATUS: Inactive [309] Pre-1980 [309]
OCCURRENCE DATE: May 18, 1964 [309]

OPERABLE UNIT: 300-IU-1 [329]
REG. AUTHORITY: Undefined [368]

DESIGNATED AREA: 600 Area [309]
COORDINATES: N12103 W2561, N12103 W3561, N12478 W2561, N12478 W3561 [309]
LOCATION: Within the 618-11 Burial Ground [309]

GROUND ELEVATION: 430.00 feet above MSL [309]
WATER TABLE DEPTH: 50.00 feet below grade [309]

SITE DIMENSIONS: **Site Area:** 1,800.00 square feet [309]

WASTE TYPES AND AMOUNTS:
Airborne contamination resulting in readings to 500 ct/min of beta/gamma of gross fission products [309].

KNOWN RELEASES:
Employees were contaminated during routine burial operations at the 618-11 Burial Ground when a fine white powder escaped from the truck chute and spilled onto the ground [309].

CLEANUP ACTIONS:
The 618-11 Burial Ground was surface stabilized in 1983 [317].

Waste Information Data System
General Summary Report
July 12, 1990

SITE NAME: UPR-600-6 [309]
ALIASES: None

SITE TYPE: Unplanned Release [309]
WASTE CATEGORY: Mixed Waste [NR]
WASTE TYPE: Solid [309]

STATUS: Inactive [309] Pre-1980 [309]
OCCURRENCE DATE: February 8, 1965 [309]

OPERABLE UNIT: 300-IU-1 [329]
REG. AUTHORITY: Undefined [368]

DESIGNATED AREA: 600 Area [309]
COORDINATES: N12103 W2561, N12103 W3561, N12478 W2561, N12478 W3561 [309]
LOCATION: Within the 618-11 Burial Ground [309]

GROUND ELEVATION: 430.00 feet above MSL [309]
WATER TABLE DEPTH: 50.00 feet below grade [309]

SITE DIMENSIONS: **Site Area:** 1,400.00 square feet [309]

WASTE TYPES AND AMOUNTS:
Ru-103 and Zr-Nb95 with readings from 100 ct/min to 200 mR/h [309].

KNOWN RELEASES:
Winds of 32 mi/h with gusts up to 44 mi/h blew waste from a truck, over an employee, and onto the ground, causing spotty contamination at the 618-11 Burial Ground [309].

CLEANUP ACTIONS:
The 618-11 Burial Ground was surface stabilized in 1983 [317].

Waste Information Data System
General Summary Report
July 12, 1990

SITE NAME: UPR-600-7 [309]
ALIASES: None

SITE TYPE: Unplanned Release [309]
WASTE CATEGORY: Mixed Waste [NR]
WASTE TYPE: Solid [309]

STATUS: Inactive [309] Pre-1980 [309]
OCCURRENCE DATE: March 1, 1965 [309]

OPERABLE UNIT: 300-IU-1 [329]
REG. AUTHORITY: Undefined [368]

DESIGNATED AREA: 600 Area [309]
COORDINATES: N12103 W2561, N12103 W3561, N12478 W2561, N12478 W3561 [309]
LOCATION: Within the 618-11 Burial Ground [309]

GROUND ELEVATION: 430.00 feet above MSL [309]
WATER TABLE DEPTH: 50.00 feet below grade [309]

KNOWN RELEASES:
An emloyee dropped a box containing a contaminated waste storage (CWS) filter from 327 Building basement from the back of a truck at the 618-11 Burial Ground. Dust came out of the box and caused spotty contamination in the immediate vicinity [309].

CLEANUP ACTIONS:
The 618-11 Burial Ground was surface stabilized in 1983 [317].

Waste Information Data System
General Summary Report
July 12, 1990

SITE NAME: UPR-600-8 [309]
ALIASES: None

SITE TYPE: Unplanned Release [309]
WASTE CATEGORY: Mixed Waste [NR]
WASTE TYPE: Solid [309]

STATUS: Inactive [309] Pre-1980 [309]
OCCURRENCE DATE: April 7, 1967 [309]

OPERABLE UNIT: 300-IU-1 [329]
REG. AUTHORITY: Undefined [368]

DESIGNATED AREA: 600 Area [309]
COORDINATES: N12103 W2561, N12103 W3561, N12478 W2561, N12478 W3561 [309]
LOCATION: Within the 618-11 Burial Ground [309]

GROUND ELEVATION: 430.00 feet above MSL [309]
WATER TABLE DEPTH: 50.00 feet below grade [309]

SITE DIMENSIONS: **Site Area:** 30.00 square feet [309]

WASTE TYPES AND AMOUNTS:
Airborne contamination resulting in readings to 100,000 ct/min [309].

KNOWN RELEASES:
The release occurred during routine burial operations, causing either air backup from a burial tank chute or loose contamination blown from the release gate of a cask as it was operated [309].

CLEANUP ACTIONS:
The 618-11 Burial Ground was surface stabilized in 1983 [317]. The area was covered with 2 to 3 in. of clean gravel [309].

Waste Information Data System
General Summary Report
July 12, 1990

SITE NAME: UPR-600-9 [309]
ALIASES: None

SITE TYPE: Unplanned Release [309]
WASTE CATEGORY: Mixed Waste [NR]
WASTE TYPE: Solid [309]

STATUS: Inactive [309] Pre-1980 [309]
OCCURRENCE DATE: April 14, 1967 [309]

OPERABLE UNIT: 300-IU-1 [329]
REG. AUTHORITY: Undefined [368]

DESIGNATED AREA: 600 Area [309]
COORDINATES: N12103 W2561, N12103 W3561, N12478 W2561, N12478 W3561 [309]
LOCATION: Within the 618-11 Burial Ground [309]

GROUND ELEVATION: 430.00 feet above MSL [309]
WATER TABLE DEPTH: 50.00 feet below grade [309]

SITE DIMENSIONS: **Length:** 750.00 feet [309]
Width: 450.00 feet [309]

WASTE TYPES AND AMOUNTS:
Corroded aluminum rupture cans and pieces of an N Reactor safety rod. Readings were up to 450 mR/h at the chute [309].

KNOWN RELEASES:
During routine burial operations in the 618-11 Burial Ground, a piece of waste became wedged in the truck chute, causing an airborne release of contamination. Contamination was limited to a fan-shaped area extending northeast from the dump chute [309].

CLEANUP ACTIONS:
The 618-11 Burial Ground was surface stabilized in 1983 [317]. The area inside the fence was covered with 3 to 6 in. of gravel. Outside the fence, the top layer was bladed and covered with clean soil [309].

Waste Information Data System
General Summary Report
July 12, 1990

SITE NAME: UPR-600-10 [309]
ALIASES: None

SITE TYPE: Unplanned Release [309]
WASTE CATEGORY: Mixed Waste [NR]
WASTE TYPE: Solid [309]

STATUS: Inactive [309] Pre-1980 [309]
OCCURRENCE DATE: September 30, 1963 [309]

OPERABLE UNIT: 300-IU-1 [329]
REG. AUTHORITY: Undefined [368]

DESIGNATED AREA: 600 Area [309]
COORDINATES: N12103 W2561, N12103 W3561, N12478 W2561, N12478 W3561 [309]
LOCATION: Around Barrel 327-2 at the 618-11 Burial Ground [309]

GROUND ELEVATION: 430.00 feet above MSL [309]
WATER TABLE DEPTH: 50.00 feet below grade [309]

SITE DIMENSIONS: **Site Area:** 400.00 square feet [309]

WASTE TYPES AND AMOUNTS:
Airborne contamination resulting in readings to 1/4 R/h at 3 in. of high-level beta/gamma [309].

KNOWN RELEASES:
During a routine burial at the 618-11 Burial ground, a container was externally contaminated with a significant quantity of loose, highly radioactive material, causing ground contamination [309].

CLEANUP ACTIONS:
The 618-11 site was surface stabilized in 1983. The contaminated ground area was washed down with 6,000 gal of water to control blowing. The most highly contaminated earth was shovelled into waste barrels, and the whole area was covered with several inches of clean sand [309].

618-11 DOCUMENT DISTRIBUTION LIST

Central Files (1)	B1-07
Document Processing Center	A3-93
Hanford Technical Library	P8-55

CHI/GEO

K. A. Bergstrom	H9-02
L. C. Hulstrom	H9-03

B&W Hanford Company

C. R. Johnson,	L6-06

Waste Management Federal Services of Hanford, Inc.

L. T. Blackford	T4-05
F. M. Coony,	H6-06
T. M. Greager	H6-06
W. S. Josephson	H6-06
M. R. Kerns	H6-06
D. E. McKenney	H6-06
D. E. Nester	H6-06
K. M. Quigley	S6-30
J. G. Riddelle	H6-06

U.S. Department of Energy,
Richland Operations Office

DOE/RL Reading Room	H2-53
R. G. McLeod	H0-12

SESC
SGN Eurisys Services Corporation
An SGN/Cogema, Inc. Company

October 21, 1997 SESC-97-602

K. L. Hladek, Manager
Technical Baseline
Waste Management Federal
Services of Hanford, Inc.
Post Office Box 700
Richland, Washington 99352-0700

Dear Mr. Hladek:

HNF-EP-0649, REV. 0, CHANGE 1 - TABLE 3-7 CALCULATION CORRECTIONS

Attached is corrected Table 3-7 from Section 3, page 3-57 of the subject document (Attachment 1). Please replace this page in HNF-EP-0649, Rev. 0, "*Characterization of the 618-11 Solid Waste Burial Ground, Disposed Wastes, and Description of the Waste Generating Facilities.*" Review of the table showed transposition errors from raw data which yielded calculation errors. The text is correct and this change will bring the table in line with the written information. A Record Of Revision is also included (Attachment 2).

Should you have any questions, please call me on 376-9671.

Sincerely,

James A. Demiter
Principal Engineer

cmr

Attachments (2)

SESC-97-602

ATTACHMENT 1

Table 3-7, Section 3, page 3-57 of
HNF-EP-0649, Rev. 0, Change 1

Consisting of 1 page

Table 3-7: 618-10 and 618-11 Burial Ground Shipping Records

Trench						Drum Storage Units						Caisson	
Radioactivity Levels of <10 Ci/ft³						Radioactivity Levels of 10 - 1000 Ci/ft³						Radioactivity Levels of >1000 Ci/ft³	
Generator	All 300	325-A	325	327	Total Volume	325-A	327	325-A	325-A	325/327	Total Volume	327	Total Volume
Year	Cardboard Cartons #	Wooden Crates	55-gal Drums#	Other ****		55-gal Drums#	Milk-pails#	5-gal Waste Pails#	1-gal Waste Pails #	CWS Filters #		Gatling-gun Cans#	
1962 a.	1962	1	0	1		68 Concreted	198	0	0	0		75	
1962 b.	1642	0	0	0		40 Concreted	0	0	0	0		0	
1963 a.	Closed	Closed	Closed	Closed		Closed	Closed	Closed	Closed	Closed		Closed	
1963 b.	1660	0	0	0		20	151	0	0	0		80	
1964 a.	3750	0	25	0		0	425	0	0	0		150	
1964 b.	4875	0	16	0		0	384	23	0	0		56	
1965 a.	4225	10	400	0		0	420	6	48	0		135	
1965 b.	3953	8	0	0		0	369	0	47	6		146	
1966 a.	3132	0	0	0		0	313	4	19	0		123	
1966 b.	2113	0	0	0		0	230	8	27	0		0	
1967 a.	2800	0	0	0		0	438	6	5	0		0	
1967 b.	3311	0	0	0		0	370	40	38	0		0	
Total	33,423	19	441	1		128	3298	7	184	6		765	
Vol. Per cont. (ft^3)	4.5	128	7.5	-	N/A	7.5	0.212	0.681	0.136	4	N/A	0.034	
Volume (ft^3)	150,404	2,432	3,308	-	156,144	960	699	59.2	25	24	1766	26	26
Volume (m^3)	4,256	69	93	-	4418	27	20	2	1	1	51	1.0	1.0

SESC-97-602

ATTACHMENT 2

Record of Revision for HNF-EP-602, Rev. 0, Change 1

Consisting of 1 page

RECORD OF REVISION	(1) Document Number HNF-EP-0649, Rev. 0	Page 3-57

(2) Title

Characterization of the 618-11 Solid Waste Burial Ground, Disposed Waste, and Description of the Waste Generating Facilities

CHANGE CONTROL RECORD

(3) Revision	(4) Description of Change - Replace, Add, and Delete Pages	Authorized for Release	
		(5) Cog. Engr.	(6) Cog. Mgr. Date
Change 1 to Rev. 0	Table 3-7 is changed to reflect corrections to calculations. Replace page 3-57.	James A. Demiter	J. J. Zimmer 10/21/97
	(7) Rev. 0, no EDT, October 1997		

618-11 DOCUMENT DISTRIBUTION LIST

Central Files (1)	B1-07
Document Processing Center	A3-93
Hanford Technical Library	P8-55

CHI/GEO

K. A. Bergstrom	H9-02
L. C. Hulstrom	H9-03

B&W Hanford Company

C. R. Johnson,	L6-06

Waste Management Federal Services of Hanford, Inc.

L. T. Blackford	T4-05
F. M. Coony,	H6-06
T. M. Greager	H6-06
W. S. Josephson	H6-06
M. R. Kerns	H6-06
D. E. McKenney	H6-06
D. E. Nester	H6-06
K. M. Quigley	S6-30
J. G. Riddelle	H6-06

U.S. Department of Energy,
Richland Operations Office

DOE/RL Reading Room	H2-53
R. G. McLeod	H0-12

SESC
SGN Eurisys Services Corporation
An SGN/Cogema, Inc. Company

October 21, 1997 SESC-97-602

K. L. Hladek, Manager
Technical Baseline
Waste Management Federal
Services of Hanford, Inc.
Post Office Box 700
Richland, Washington 99352-0700

Dear Mr. Hladek:

HNF-EP-0649, REV. 0, CHANGE 1 - TABLE 3-7 CALCULATION CORRECTIONS

Attached is corrected Table 3-7 from Section 3, page 3-57 of the subject document (Attachment 1). Please replace this page in HNF-EP-0649, Rev. 0, "*Characterization of the 618-11 Solid Waste Burial Ground, Disposed Wastes, and Description of the Waste Generating Facilities.*" Review of the table showed transposition errors from raw data which yielded calculation errors. The text is correct and this change will bring the table in line with the written information. A Record Of Revision is also included (Attachment 2).

Should you have any questions, please call me on 376-9671.

Sincerely,

James A. Demiter
Principal Engineer

cmr

Attachments (2)

SESC-97-602

ATTACHMENT 1

Table 3-7, Section 3, page 3-57 of
HNF-EP-0649, Rev. 0, Change 1

Consisting of 1 page

Table 3-7: 618-10 and 618-11 Burial Ground Shipping Records

Trench						Drum Storage Units						Caisson	
Radioactivity Levels of <10 Ci/ft³						Radioactivity Levels of 10 - 1000 Ci/ft³						Radioactivity Levels of >1000 Ci/ft³	
Generator	All 300	325-A	325	327	Total Volume	325-A	327	325-A	325-A	325/327	Total Volume	327	Total Volume
Year	Cardboard Cartons #	Wooden Crates	55-gal. Drums#	Other ***		55-gal. Drums#	Milk-pails#	5-gal. Waste Pails #	1-gal. Waste Pails #	CWS Filters #		Gatling-gun Cans#	
1962 a.	1962	1	0	1		68 Concreted	198	0	0	0		75	
1962 b.	1642	0	0	0		40 Concreted	0	0	0	0		0	
1963 a.	Closed	Closed	Closed	Closed		Closed	Closed	Closed	Closed	Closed		Closed	
1963 b.	1660	0	0	0		20	151	0	0	0		80	
1964 a.	3750	0	25	0		0	425	0	0	0		150	
1964 b.	4875	0	16	0		0	384	23	0	0		56	
1965 a.	4225	10	400	0		0	420	6	48	0		135	
1965 b.	3953	8	0	0		0	369	0	47	6		146	
1966 a.	3132	0	0	0		0	313	4	19	0		123	
1966 b.	2113	0	0	0		0	230	8	27	0		0	
1967 a.	2800	0	0	0		0	438	6	5	0		0	
1967 b.	3311	0	0	0		0	370	40	38	0		0	
Total	33,423	19	441	1		128	3298	7	184	6		765	
Vol. Per cont. (ft^3)	4.5	128	7.5	-	N/A	7.5	0.212	0.681	0.136	4	N/A	0.034	
Volume (ft^3)	150,404	2,432	3,308	-	156,144	960	699	59.2	25	24	1766	26	26
Volume (m^3)	4,256	69	93	-	4,418	27	20	2	1	1	51	1.0	1.0

SESC-97-602

ATTACHMENT 2

Record of Revision for HNF-EP-602, Rev. 0, Change 1

Consisting of 1 page

RECORD OF REVISION	(1) Document Number HNF-EP-0649, Rev. 0	Page 3-57

(2) Title

Characterization of the 618-11 Solid Waste Burial Ground, Disposed Waste, and Description of the Waste Generating Facilities

CHANGE CONTROL RECORD

(3) Revision	(4) Description of Change - Replace, Add, and Delete Pages	Authorized for Release	
		(5) Cog. Engr.	(6) Cog. Mgr. Date
Change 1 to Rev. 0	Table 3-7 is changed to reflect corrections to calculations. Replace page 3-57.	James A. Demiter	J. J. Zimmer 10/21/97
	(7) Rev. 0, no EDT, October 1997		