2010 MNS RO Question Worksheets

FINAL RO/SRO WORKING COPY

FOR REVIEW ONLY - DO NOT DISTRIBUTE

D

2010 MNS SRO NRC Examination QUESTION 1

2501

SYS003 K5.01 - Reactor Coolant Pump System (RCPS)

Knowledge of the operational implications of the following concepts as they apply to the RCPS: (CFR: 41.5 / 45.7)

The relationship between the RCPS flow rate and the nuclear core operating parameters (quadrant power tilt, imbalance, DNB rate, local power density, difference in loop T-hot pressure) .....

Given the following conditions on Unit 1:

- The unit is operating at 40% RTP
- NCP 'C' trips on overcurrent

Assuming no operator action, which ONE (1) of the following describes the effect on the Departure from Nucleate Boiling Ratio (DNBR) AND reactor thermal power?

A. DNBR will INCREASE.
Reactor power decreases and stabilizes at a new lower thermal power.

B. DNBR will DECREASE.
Reactor power decreases and stabilizes at a new lower thermal power.

C. DNBR will INCREASE.
Reactor power initially decreases and then returns to 40% thermal power.

D. DNBR will DECREASE.
Reactor power initially decreases and then returns to 40% thermal power.

General Discussion

The decrease in Reactor Coolant Flow with reactor power, temperature (core delta-T), and pressure remaining the same will cause a decrease in DNBR. In this case Actual Heat Flux (AHF) remains the same while the Critical Heat Flux (CHF)(amount of heat required to cause a departure from nucleate boiling) will decrease. Therefore DNBR (CHF/AHF) decreases.

Since steam demand has not changed core thermal power (Q=mcpdelta-T) must remain the same steady-state to steady-state. However, reactor power will initially decrease due to the immediate effect of the loss of flow (mass flow rate decreases) while core delta-T initially has not changed. After the initial decrease in reactor thermal power, the colder water returning to the reactor will cause an increase in reactor power, core delta-T will increase, and core thermal power will return to 40% thermal power based on steam demand.

The increase in core delta-T will result in the water at the core exit being closer to vaporization and therefore CHF decreases causes an additional decrease in DNBR.

The conclusion is that DNBR decreases and reactor power will initially decrease and then return to 40% thermal power.

Answer A Discussion

INCORRECT: See explanation above.

PLAUSIBLE:

The first part is plausible If the applicant confuses the DNBR with an actual departure from nucleate boiling as the likelihood of an actual departure from nucleate boiling has increased.

Part 2 is plausible if the applicant neglects to consider the long-term effect of the NC pump trip. The reactor power will initially decrease due to the decrease in flow. However, power will not stabilize at the new lower power but will return to 40% thermal power since steam demand has remained constant.

Answer B Discussion

INCORRECT: See explanation above.

PLAUSIBLE: First part is correct. DNBR does decrease.

Part 2 is plausible if the applicant neglects to consider the long-term effect of the NC pump trip. The reactor power will initially decrease due to the decrease in flow. However, power will not stabilize at the new lower power but will return to 40% thermal power since steam demand has remained constant.

Answer C Discussion

INCORRECT: See explanation above.

PLAUSIBLE:

The first part is plausible If the applicant confuses the DNBR with an actual departure from nucleate boiling as the likelihood of an actual departure from nucleate boiling has increased.

The second part of answer is correct.

Answer D Discussion

CORRECT: See explanation above.

Basis for meeting the KA

The KA is matched because the applicant must determine the effect of a reduction in NC system flow rate (due to NC pump trip) on core operating parameters (i.e. DNBR & core thermal power).

Basis for Hi Cog

This is a higher cognitive level question because it requires more than one mental step to arrive at the correct answer. The applicant must first determine the effect of the reduction in NC system flow on the DNBR. Then the applicant must determine the long-term effect on reactor thermal power.

Basis for SRO only

Job Level	Cognitive Level	QuestionType	Question Source
RO	Comprehension	NEW	

velopment References

Learning Objectives: OP-BNT TH08024 & Th08026

References:

1. OP-BNT-TH08 Section 3.1
2. OP-BNT-RT08 Section 2.3
3. OP-BNT-TH07 Section 5.0

Student References Provided

SYS003 K5.01 - Reactor Coolant Pump System (RCPS)

Knowledge of the operational implications of the following concepts as they apply to the RCPS: (CFR: 41.5 / 45.7)

The relationship between the RCPS flow rate and the nuclear core operating parameters (quadrant power tilt, imbalance, DNB rate, local power density, difference in loop T-hot pressure) .....

401-9 Comments:

Remarks/Status

401-9 Comments:

No comment.

Resolution / Comments:

N/A

Question 1 References:

From OP-BNT-TH08 Section 3.1:

The exact value for CHF is somewhat nebulous as many design factors affect CHF. Equations have been developed which allow CHF to be calculated for both PWR (subcooled coolant) and BWR (saturated coolant) reactor designs. Many of the variables which affect the magnitude of CHF are design factors beyond the scope of this lesson. However, there are four parameters which are controlled by the operator. These parameters are coolant pressure, temperature, flow and power.

Pressure: saturation temperature and pressure are related. As pressure increases, the saturation temperature also increases. Increasing pressure affects the density of both water and vapor and therefore, the formation of vapor bubbles on the heat transfer surface. Pressure also affects the subcooling margin (see note below) and the time required for a vapor bubble to form or collapse. Within the normal range of operating pressures, increasing pressure increases the value of CHF.

Bulk coolant temperature: bulk coolant temperature affects CHF in much the same manner as pressure. As the temperature of the coolant increases, less additional heat energy is required to cause vapor formation, so the rate of vapor formation increases, increasing the likelihood that the clad surface will develop a vapor film. As bulk coolant temperature increases, CHF decreases.

Mass flow rate: as mass flow rate increases, the velocity of the coolant increases. The increased velocity increases turbulence and reduces the boundary layer thickness which in turn reduces the temperature gradient in the boundary layer. The increased velocity also reduces the size of the vapor bubbles which form on the surface of the fuel clad by sweeping them off the surface and supplies subcooled liquid to the fuel surface. The net effect is increased heat transfer efficiency as the difference in temperature between the fuel surface and the coolant in the boundary layer is maximized. CHF increases as coolant flow rate increases.

Power: power affects both the Actual Heat Flux (AHF) of the fuel and CHF. As power increases the rate of heat production increases as does AHF. As AHF increases the fuel clad surface temperature increases as does the rate of vapor bubble formation on the clad surface. The increased rate of vapor formation on the fuel clad surface increases the probability of a vapor film forming on the heat transfer surface (DNB). For a given coolant velocity and temperature, CHF decreases as power (heat flux) increases due to the increase in clad surface temperature.

At higher power, the coolant temperature rise across the core increases. Regardless of what method of reactor coolant temperature control is used (ramped or constant), the temperature and enthalpy at the core exit is higher than the inlet. As the coolant passes through the core gaining heat, CHF steadily decreases from the bottom of the core to the top of the core.

From Lesson Plan OP-BNT-RT08 Section 2.3:

Once the reactor has operated at power, xenon and other fission product poisons begin to build to their equilibrium values. This buildup adds negative reactivity to the reactor. Boron concentration changes or control rod withdrawal must compensate for this negative reactivity. The control rods are normally kept almost fully withdrawn to maintain the axial flux difference (axial imbalance or ΔI at ONS) within limits to optimize fuel utilization. Xenon buildup is normally compensated for by dilution. Since xenon buildup is a relatively slow process, this presents no significant problem for the reactor operator.

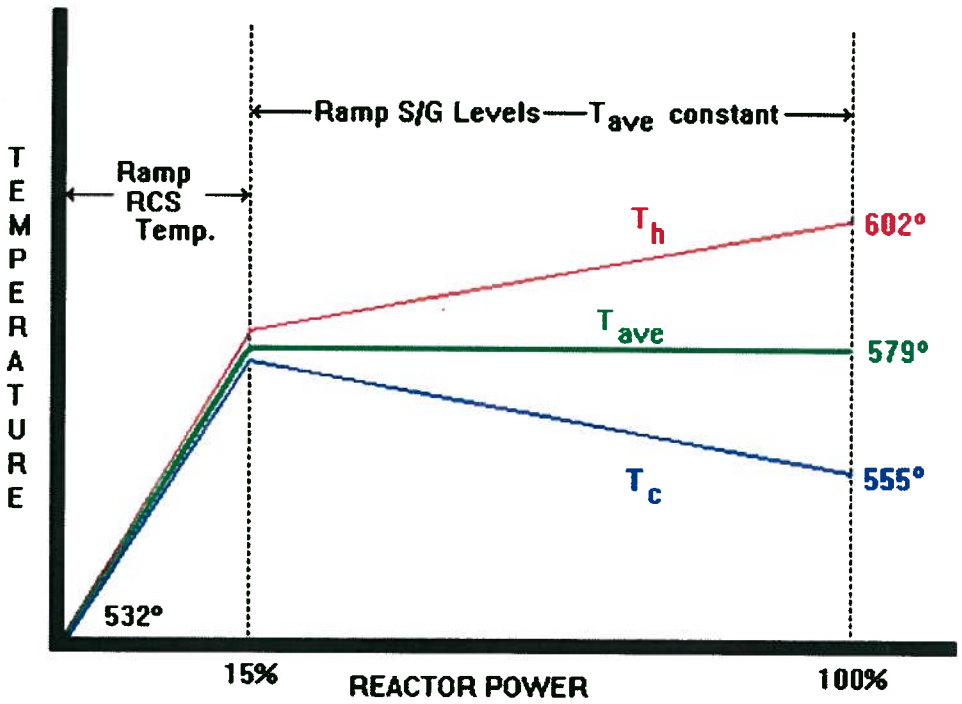

Figure 2 Reactor Coolant Temperature verses Reactor Power (B&W)

2.3 LOAD CHANGES AT POWER

Objectives 4, 5, 6

Once power passes the point of adding heat into the power range of operation, the combined effects of moderator temperature feedback and fuel temperature feedback cause the reactor characteristics to change. Now, secondary system steam demand controls the steady state reactor power level. For power to be stable (constant), two conditions must be satisfied: 1) the reactivity must be balanced (that is, $k_{eff} = 1$) and 2) the power mismatch must be 0. The power mismatch (PMM) is defined to be the difference between heat production by the reactor and heat removal by steam demand.

$$PMM = \dot{Q}_{PROD} - \dot{Q}_{REM}$$

Equation 1

From Lesson Plan OP-BNT-TH07 Section 5.0:

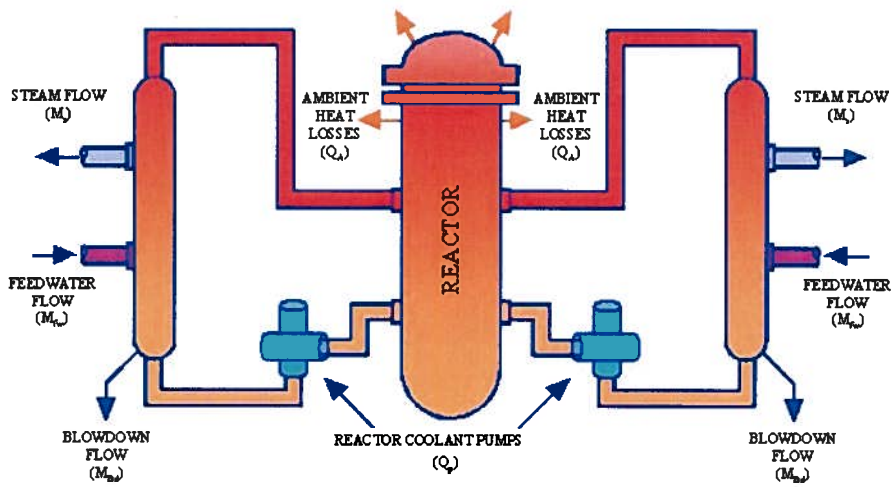

Figure 7 Reactor Heat Balance

Objective 17

Two methods are commonly used to calculate thermal power based on the available parameters. These methods use the heat transfer equations developed earlier.

Reactor coolant system parameters can be used to determine CTP, using the following equation:

$$\dot{Q} = \dot{m} c_p \Delta T$$

Where, for a reactor coolant system heat balance:

$\dot{Q}$ = heat transfer rate of the reactor core (Btu/hr)

$\dot{m}$ = mass flow rate of the reactor coolant system (lb_m/hr)

c_p = specific heat capacity of the reactor coolant (Btu/lb_m-°F)

ΔT = temperature difference across the core ($T_H - T_C$) (°F)

Equation 16

Plant instrumentation provide $\dot{m}$ and ΔT values. The heat capacity of the water, c_p can be closely approximated using steam tables and exact values are available in subcooled water tables.

The heat transfer rate across the steam generator can also be used to determine CTP. Since boiling occurs on the secondary side of the steam generators, the calculation must account for the latent heat addition as well as the sensible heat addition which occurs as the subcooled feedwater is first heated to boiling, then vaporized. For this reason, the change in enthalpy between the steam and the feedwater is normally used to perform the calculations

SYS004 K6.02 - Chemical and Volume Control System
nowledge of the effect of a loss or malfunction on the following CVCS components: (CFR: 41.7 / 45.7)
Demineralizers and ion exchangers .....

Given the following conditions on Unit 1:

- Unit is operating at 100% RTP
- The controller for 1KC-132 (Letdown Hx Outlet Temp Ctrl) has been placed in MANUAL due to erratic operation
- Subsequently, NV letdown flow is increased by 10 GPM as requested by Chemistry

As letdown temperature increases, NC system boron concentration will __(1)__ AND if letdown temperature continues to increase, letdown flow will automatically bypass the demineralizer at __(2)__.

Which ONE (1) of the following completes the statement above?

A. 1. INCREASE
   2. 120°F

B. 1. INCREASE
   2. 138°F

C. 1. DECREASE
   2. 120°F

D. 1. DECREASE
   2. 138°F

General Discussion

Requires operator to determine the effect of increasing letdown temp on the MB Demineralizer. At low temperatures, the boron affinity is increased. At high temperatures, boron affinity is reduced. If the temperature is increased previously captured boron ions are released from the MB Demineralizer thus increasing NC system boron concentration. If Letdown Hx outlet temperature increases to 138°F, 1NV-127A will divert to the VCT to protect the demineralizer resin.

Answer A Discussion

INCORRECT: See explanation above.

PLAUSIBLE: Answer 1 is correct.

Answer 2 is plausible because the Letdown Hx Outlet Hi Temperature annunciator (1AD-7 / H2) alarms at 120°F.

Answer B Discussion

CORRECT: See explanation above.

Answer C Discussion

INCORRECT: See explanation above.

PLAUSIBLE: Answer 1 is plausible if applicant does not understand the effects of increasing letdown temperature on the demineralizer resins affinity for boron atoms. It is plausible for the applicant to conclude that increasing temperature (which would cause the demineralizer resin to expand) would result in a larger surface area in the resin and thus increase the probability of boron absorption.

Answer 2 is plausible because the Letdown Hx Outlet Hi Temperature annunciator (1AD-7 / H2) alarms at 120°F.

Answer D Discussion

INCORRECT: See explanation above.

PLAUSIBLE: Answer 1 is plausible if applicant does not understand the effects of increasing letdown temperature on the demineralizer resins affinity for boron atoms. It is plausible for the applicant to conclude that increasing temperature (which would cause the demineralizer resin to expand) would result in a larger surface area in the resin and thus increase the probability of boron absorption.

Answer 2 is correct.

Basis for meeting the KA

The KA is matched because a malfunction has occurred (temperature controller failure) and the applicant must determine how the malfunction affects the "CVCS components" in question (in this case the demineralizers). The applicant must also recall that letdown will be diverted to the VCT on high temperature to protect the demineralizer resin.

Basis for Hi Cog

Basis for SRO only

Job Level	Cognitive Level	QuestionType	Question Source
RO	Memory	MODIFIED	2009 MNS RO Retake

Development References

References:
1. OP-MC-PS-NV Section 2.6 Learning Objective 4
2. OP-BNT-CH05 Section 7.3 Learning Objective CH05025

Student References Provided

SYS004 K6.02 - Chemical and Volume Control System
Knowledge of the effect of a loss or malfunction on the following CVCS components: (CFR: 41.7 / 45.7)
Demineralizers and ion exchangers .....

1-9 Comments:

Remarks/Status

401-9 Comments:

No comment.

QUESTION 2 2502 B

Resolution / Comments:

N/A

Question 2 References:

From Lesson Plan OP-MC-PS-NV:

2.6 Letdown Heat Exchanger

Objective # 4

The letdown heat exchanger cools the letdown flow to the operating temperature of the mixed bed demineralizers. Letdown flow is through the tube side of the heat exchanger and KC (Component Cooling) flows through the shell side. The temperature sensor controls KC-132 and regulates the amount of cooling so that ≅105°F is maintained. The temperature setpoint is inserted using the DCS Graphic - NV - Charging Control KC-132 L/D Hx Outlet Temp Control Graphic or its SLIMs station.

2.7 NV-124 Letdown Pressure Control Valve

The letdown pressure control valve, NV-124, reduces letdown pressure to within design limits. During normal operation, it maintains a backpressure of approximately 350 psig. This valve is used in conjunction with NV-459 when initiating or adjusting letdown flow. Pressure can be controlled manually or automatically.

During fixed letdown orifice operation, backpressure is increased to 450 psig to minimize vibration

The valve has proportional trim which increases pressure control response time at low flows because changes in valve position at the lower end of the valve stroke results in only small changes in the flow coefficient. As the valve, NV-124, becomes "more open", a change in valve position results in a much larger change in flow coefficient which makes the valve more responsive to changes in letdown flow. (PIP-0-M96-0861)

NV-156, the relief downstream of NV-124, protects piping and demineralizers from overpressure. It has a setpoint of 255 psig and relieves to the VCT.

2.8 NV-127A (Demin Temp. Divert Valve)

NV-127A auto diverts NV flow to the VCT if high temperature (≈138°F) exists in the letdown line to prevent damage to demineralizers' resin.

2.9 Reactor Coolant Filters "A" and "B"

Objective # 4

There are two (2) filters located in the letdown line. Only one is placed in service at a time (normally NC "A"). **The filters collect resin fines and particulates to prevent resin from reaching the NV pump suction.** There are two (2) local ΔP indicators provided. While both filters are currently utilized as post-filters (downstream of the demineralizers), the "B" filter can be aligned as a pre-filter to the demineralizers.

Demineralizer bypass lines are provided to allow continued letdown filtration with the demineralizers out of service.

From Lesson Plan OP-BNT-CH05 Section 7.3:

boron saturated resin, the ability of the resin to exchange unwanted impurities is severely reduced. One of the primary reasons for this demineralizer is to control the trace amounts of chloride (also an anion) present in the reactor coolant. When a chloride ion enters a boron saturated resin bed only some of the chloride ions will be exchanged due to the large number of borate ions present which compete for the exchange sites on the resin. The amount of chloride which can be retained is dependent on the concentration of the "competing" ion, borate. For this reason, early in core life when the concentration of boron in the reactor coolant is high, the demineralizer is not able to remove all the chloride from the reactor coolant. As the core ages and the concentration of boron is reduced, the concentration of chloride in the reactor coolant decreases as the amount of competing borate ions decreases.

Boron affinity of a resin bed is also affected by the temperature of the coolant as it passes through the bed. At lower temperatures, the borate ion bonding to exchange site contains three boron atoms. At higher temperatures, the borate ion contains only one boron atom. The results of this characteristic are that at lower temperatures, resins are more efficient at removing boron from coolant than at higher temperatures. A boron saturated resin bed will actually release boron as the temperature is increased.

The second chemical added to the reactor coolant is lithium hydroxide. Lithium is a cation with a single "+" charge. During normal operation the cation portion of the mixed bed demineralizer is "saturated" with lithium. In a similar fashion to the borate / chloride competition, the relatively large amount of lithium present in the reactor coolant reduces the capacity of the mixed bed demineralizer for other unwanted cations which are present in only trace amounts (such as cesium). One reason for the chemical and volume control system cation bed demineralizer is to remove cesium as the unit is shutdown for refueling (to prevent radioactive cesium isotopes from presenting dose problems to workers). The cation bed demineralizer is NOT lithium saturated and can effectively remove lithium, cesium, and other trace cation impurities from the coolant.

In the discussion of the **Effects of Ion Exchange,** the effect of passing a sodium chloride solution through various types of resin beds was discussed. Based on that discussion it follows that a demineralizer can be used to alter the pH of the process fluid. This is commonly done as a means to control the pH of the reactor coolant.

The reactor coolant is a solution of boric acid with lithium hydroxide added to increase the pH. Lithium hydroxide is produced in the coolant via a boron – neutron reaction. This production of lithium causes the pH of the reactor coolant to increase. One way to reduce the concentration of lithium (and the pH) in the reactor coolant is to process the coolant through a hydrogen form cation demineralizer. The lithium ions are removed and replaced with hydrogen ions (which then form water), effectively reducing the pH.

In systems where it is possible to subject the demineralizer resin to high temperatures, demineralizers have automatic features to protect against temperature damage. This is usually accomplished by automatic closure of the demineralizer inlet valves to isolate the demineralizer from high temperature liquid when high temperature at the inlet to the demineralizer is sensed. These systems are typically equipped with bypass valves that can divert flow around the demineralizer until normal system temperature is restored.

Objective 26

Oconee has reactor coolant demineralizers which are loaded with only anion resin. These demineralizers are used primarily to remove boron from the reactor coolant late in the core cycle. The amount of feed and bleed of the reactor coolant necessary to lower the boron concentration

Question 2 Parent Questions:

Question 2243 (2009 NRC RO Retake Exam):

FOR REVIEW ONLY - DO NOT DISTRIBUTE

2009 MNS RO NRC Retake Examina QUESTION 43 2243 **B**

KA	KA_desc
APE026 AA2.04	Ability to determine and interpret the following as they apply to the Loss of Component Cooling Water: (CFR: 43.5 / 45.13) The normal values and upper limits for the temperatures of the components cooled by CCW

Given the following current conditions on Unit 1:

- Unit is operating at 100% RTP
- A malfunction of the Letdown Hx Outlet temperature controller has caused 1KC-132 (Letdown Hx Cooling Water Control) valve to slowly drift closed
- Letdown Heat Exchanger Outlet temperature has increased from 106°F to 115°F

Which ONE (1) of the following correctly completes the statement below?

Based on current conditions, NC system temperature will __(1)__ due to reactivity effects AND if Letdown Hx Outlet temperature continues to increase, 1NV-127A, LD Hx Outlet 3-Way Cntrl will divert to the VCT at __(2)__.

A. (1) decrease
(2) 120°F

B. (1) decrease
(2) 138°F

C. (1) increase
(2) 120°F

D. (1) increase
(2) 138°F

General Discussion

The increase in Letdown Heat Exchanger Outlet temperature causes an increase in mixed bed demineralizer resin temperature. This temperature increase results in thermal regeneration of the resin and the release of boron from the demineralizer resin to the letdown. This results in an increase in the boron concentration of the charging water going back to the NC system which causes NC system temperature to decrease. If Letdown temperature increases to 138°F. letdown will divert to the VCT to protect the demineralizer resin from damage.

This KA is matched because the applicant must determine the effect that increase in letdown line temperature will have on NC system temperature and the upper limit for letdown temperature before NV-127A diverts.

This is a comprehension level question because the applicant must process and evaluate multiple pieces of information to determine the correct answer. First. the applicant must determine the increase in letdown temperature will result in a release of boron from the demineralizers and then determine that the increase in boron concentration in the NV charging will result in a temperature decrease. The applicant must then recall from memory the temperature setpoint for the diversion of letdown flow.

Answer A Discussion

Incorrect. NC system temperature decreasing is correct. The temperature of 120°F is plausible because that is the setpoint for the Letdown Hx Outlet Hi Temperature Annunciator.

Answer B Discussion

CORRECT.

Answer C Discussion

Incorrect. Plausible if the applicant does not recall the effect of letdown line temperature on the affinity of demineralizer resin for boron. 120°F is plausible because it is the setpoint for the Letdown Hx Outlet Temperature Hi Annunciator.

Answer D Discussion

Incorrect. Plausible if the applicant does not recall the effect of letdown line temperature on the affinity of demineralizer resin for boron. The temperature setpoint is correct.

Basis for meeting the KA

Basis for Hi Cog

Basis for SRO only

Job Level	Cognitive Level	QuestionType	Question Source
RO	Comprehension	NEW	

Development References

Annunciator Response Procedure for Panel 1AD-7 / H2 BNT-CH05R3. Ion Exchange Objective 23 page 23

Student References Provided

KA	KA_desc
APE026 AA2.04	Ability to determine and interpret the following as they apply to the Loss of Component Cooling Water: (CFR: 43.5 / 45.13) The normal values and upper limits for the temperatures of the components cooled by CCW

401-9 Comments:

APE026AA2.04
I think 120oF is NOT plausible because it is too low. Consider using a higher temperature. At what temp does the resin burn? Something higher than 138 would also be acceptable.
RFA 10/28/09

Remarks/Status

Disagree with Lead on this one. facility feels that 120 deg has ample plausibility. plan to discuss further when during on site review.

Question 14 (2009 NRC Exam):

Examination Outline Cross-reference:	Level	RO	SRO
		X	X
	Tier #	2	
DRAFT	Group #	1	
	K/A #	004K5.50	
	Importance Rating	2.6	

Chemical and Volume Control System:
Knowledge of the operational implications of the following concepts as they apply to the NV system:
Design basis letdown system temperatures: resin integrity

Proposed Question: Common 14

1 Pt Given the following on Unit 1:

- 1KC-132 (L/D HX Cooling Water Control Valve) has failed
- LD HX outlet temperature is 115°F and increasing

If LD Hx outlet temperature reaches __(1)__ 1NV-127A (LD Hx Outlet 3-Way Temp Cntrl) will AUTO divert letdown flow to the __(2)__.

A. (1) 138°F
(2) VCT to protect the demineralizer resin

B. (1) 138°F
(2) RHT to protect the VCT from over temperature

C. (1) 120°F
(2) VCT to protect the demineralizer resin

D. (1) 120°F
(2) RHT to protect the VCT from over temperature

Proposed Answer: **A**

Explanation (Optional):

As letdown temperature increases to 138°F 1NV-127A will divert letdown flow to the VCT to protect the demineralizer resin.

A. **Correct.**
B. **Incorrect:** See explanation above. **Plausible** because there is a diversion flow path to the RHT. However, that diversion of letdown flow is on VCT high level.
C. **Incorrect:** See explanation above. **Plausible** because 1NV-127A does divert to the VCT on high temperature. Also, the Letdown Heat Exchanger Outlet Hi Temperature annunciator alarms at 120°F.
D. **Incorrect:** See explanation above. **Plausible** because there is a diversion flow path to the RHT. However, that diversion of letdown flow is on VCT high level. Also, the Letdown Heat Exchanger Outlet Hi Temperature annunciator alarms at 120°F.

Technical Reference(s)	LP OP-MC-PS-NV (Rev 55) Pg 35 of 153 Section 2.14	(Attach if not previously provided)
	OP/1/A/6100/010 H (Annunciator Response for Panel 1AD-7) Pg 37 of 52 (Rev 57)	(Including version or revision #)

Proposed references to be provided to applicants during examination: None

Learning Objective: OP-MC-PS-NV Obj 10 (As available)

Question Source:

Bank #		
Modified Bank #		(Note changes or attach parent)
New	X	

Question History: Last NRC Exam

Question Cognitive Level:

Memory or Fundamental Knowledge	X
Comprehension or Analysis	

10 CFR Part 55 Content:

55.41	41.5
55.43	

Comments:

Chemical and Volume Control System:
Knowledge of the operational implications of the following concepts as they apply to the NV system:
Design basis letdown system temperatures: resin integrity

KA is matched because the candidate must be familiar with the letdown design basis maximum temperature. He/she must also know the operational implication (letdown auto divert to the VCT) should that temperature be reached.

SYS005 A1.02 - Residual Heat Removal System (RHRS)
bility to predict and/or monitor changes in parameters (to prevent exceeding design limits) associated with operating the RHRS controls
ncluding: (CFR: 41.5 / 45.5)
RHR flow rate .....

Given the following conditions on Unit 1:

- Unit is in MODE 5 with ND Train 'A' in service
- 1NI-173A (Train 'A' ND to A & B CL) is OPEN
- ND flow is being reduced by throttling 1ND-29A ('A' ND HX Outlet) in preparation for removing ND from service

1ND-68A ('A' ND Pump & A HX Mini-flow) will open if 1A ND pump flow decreases to less than a MAXIMUM of ___(1)___. The Operators in the Control Room can verify that 1ND-68A has opened by recirc flow indication on ___(2)___.

Which ONE (1) of the following completes the statements above?

A. 1. 325 GPM
   2. the OAC <u>ONLY</u>

B. 1. 325 GPM
   2. a chart recorder on MC-7 <u>AND</u> the OAC

C. 1. 750 GPM
   2. the OAC <u>ONLY</u>

D. 1. 750 GPM
   2. a chart recorder on MC-7 <u>AND</u> the OAC

General Discussion

To assure that no damage to the pump will occur due to overheating or vibration during low flow operation (less than 750gpm), a 3 inch mini-flow line is provided from the outlet of the each ND HX back to the associated pump suction. The flow through this line is automatically controlled by ND-68A (A ND Pump & A HX Mini-flow) for Train A and ND-67B (B ND Pump & B HX Mini-flow) for Train B. These valves will open when its associated pump flow decreases to 750 gpm and will close when flow increases to 1400 gpm.

This mini-flow line works well provided the check valve at the discharge of the ND pump does not become closed due to a higher pressure downstream. This can occur when both ND pumps are running with their discharge lines cross connected (such as ND15 and ND30 open) and their pressure/flow characteristics are significantly different. The stronger pump will force the other pump's discharge check valve closed thus its 3 inch mini-flow line will be disabled. To account for this, a 2 inch mini-flow line around each ND pump is provided. This line is always in operation to provide a minimum of 300 gpm but targeted for 325 gpm flow (set by a manual throttle valve) back to the suction of its respective pump. This flow path is upstream of the check valve therefore can not be isolated by it.

Indication for both the 3 inch ND PUMP and HX Mini-flow (0 to 500 gpm) and 2 inch ND Pump Mini-flow (0 to 500 gpm) lines is provided on MC 7 in the Control Room via chart recorders NDCR5060 for pump A and NDCR5070 for pump B. Recirc flow indications are also provided on the OAC.

Answer A Discussion

INCORRECT: See explanation above.

PLAUSIBLE: Part 1 is plausible because the is the design flow rate through the mini-flow line around the ND pump only.

Part 2 is plausible if the applicant does not recall that there is also recirc flow indication on MC-7.

Answer B Discussion

INCORRECT: See explanation above.

PLAUSIBLE: Part 1 is plausible because this is the design flow rate through the mini-flow line around the ND pump only.

Part 2 is correct.

Answer C Discussion

INCORRECT: See explanation above.

PLAUSIBLE: Part 1 is correct.

Part 2 is plausible if the applicant does not recall that there is also recirc flow indication on MC-7.

Answer D Discussion

CORRECT: See explanation above.

Basis for meeting the KA

The KA is matched because RHR flow rate is being changed and the applicant demonstrates the ability to monitor changes in parameters by knowing when the mini-flow recirc valve should open to protect the pump from damage (i.e. exceeding design limits) and knowing what indications are available to determine if the mini-flow valves have operated correctly.

Basis for Hi Cog

Basis for SRO only

Job Level	Cognitive Level	QuestionType	Question Source
RO	Memory	NEW	

Development References

Learning Objectives:
1) PS-ND #4,5

References:
1) Lesson Plan OP-MC-PS-ND Section 2.1

Student References Provided

2010 MNS SRO NRC Examination QUESTION 3

2503

D

SYS005 A1.02 - Residual Heat Removal System (RHRS)

ility to predict and/or monitor changes in parameters (to prevent exceeding design limits) associated with operating the RHRS controls cluding: (CFR: 41.5 / 45.5)

RHR flow rate .....

401-9 Comments:

Remarks/Status
401-9 Comments: No comment. ---------- ---------- Resolution / Comments: N/A

Question 3 References:

From Lesson Plan OP-MC-PS-ND Section 2.1:

pump breaker must be closed before the "A(B) ND PUMP LOW FLO TO COLD LEGS" alarm on AD9 (setpoint 500 gpm) can occur. This alarm also looks at the position of valves ND-15B, 30A (Train B(A) ND to Hot Leg Isol) and NI-173A (Train A ND to A & B CL), 178B (Train B ND to C&D CL) to actuate the alarm. The logic diagram for this alarm is located in the Alarm Response Manual on its annunciator window data sheet.

To assure that no damage to the pump will occur due to overheating or vibration during low flow operation (less than 750gpm), a **3 inch mini-flow line** is provided from the outlet of the each ND HX back to the associated pump suction **(refer to Drawing 7.1). The flow through this line is automatically controlled by ND-68A (A ND Pump & A HX Mini-flow) for Train A and ND-67B (B ND Pump & B HX Mini-flow) for Train B. These valves will open when its associated pump flow decreases to 750 gpm and will close when flow increases to 1400 gpm.** The mini-flow line loop includes the ND HX to ensure the recirculating fluid does not become overheated due to the energy added by the pump. This mini-flow line works well provided the check valve at the discharge of the ND pump does not become closed due to a higher pressure downstream. This can occur when both ND pumps are running with their discharge lines cross connected (such as ND15 and ND30 open) and their pressure/flow characteristics are significantly different. The "stronger" pump will force the other pump's discharge check valve closed thus its 3 inch mini-flow line will be disabled. To account for this, a **2 inch mini-flow line** around each ND pump is provided. **This line is always in operation to provide a minimum of 300 gpm but targeted for 325 gpm flow (set by a manual throttle valve) back to the suction of its respective pump. This flow path is upstream of the check valve therefore can not be isolated by it.**

Indication for both the 3 inch "ND PUMP and HX Mini-flow" (0 to 500 gpm) and 2 inch "ND Pump Mini-flow" (0 to 500 gpm) lines is provided on MC 7 **in the Control Room** via chart recorders NDCR5060 for pump A and NDCR5070 for pump B. **Recirc flow indications are also provided on the OAC.**

Both ND pumps will auto start on a Safety Injection Signal. This automatic start signal is received from the Diesel Generator Sequencer. If power is lost to the train related 4160V buss (Blackout), the ND pumps will receive a "start permissive" from the sequencer so they can be manually started if needed, but do **NOT auto-start.**

2.2 ND Heat Exchangers

There are two heat exchangers per unit (one per train). Each heat exchanger is designed to remove one-half of the total heat load. They are shell and U-tube type heat exchangers with ND flowing through the tube side and KC through the shell side. **An annunciator "LO KC FLOW TO A ND HEAT EXCH" and "LO KC FLOW TO B ND**

HEAT EXCH" on AD9 warns the operator **if KC flow to the ND heat Exchanger decreases to 4500 gpm.** This alarm is "state sensitive" (it will not generate an alarm under conditions when an alarm would not be applicable) and has logic to determine if ND flow exists on that train and will only alarm if KC flow is needed to that train.

SYS005 K3.01 - Residual Heat Removal System (RHRS)
nowledge of the effect that a loss or malfunction of the RHRS will have on the following: (CFR: 41.7 / 45.6)
CS .....

Given the following conditions on Unit 1:

- The unit is in MODE 4
- The crew is increasing NC system temp and pressure for unit startup
- ND Train 'A' is in service
- NC system temperature is being maintained at 140°F

If instrument air is lost to 1ND-34 (A & B ND Hx Byp) the valve will fail ___(1)___ AND NC system temperature will ___(2)___.

Which ONE (1) of the following completes the statement above?

A. 1. OPEN
   2. INCREASE

B. 1. CLOSED
   2. INCREASE

C. 1. OPEN
   2. DECREASE

D. 1. CLOSED
   2. DECREASE

General Discussion

ND-34 fails open on a loss of instrument air. This bypasses flow around the ND Hx causing a decrease in flow through the heat exchanger. This causes the temperature of the water returning to the NC system to increase and therefore NC temperature would increase.

Answer A Discussion

CORRECT: See explanation above.

Answer B Discussion

INCORRECT: See explanation above.

PLAUSIBLE: Part 1 is plausible If the applicant does not understand how ND-34 fails on a loss of air. It is plausible for the applicant to conclude that ND-34 fails closed on a loss of VI since this would prevent the ND Hx from being robbed of flow.

Part 2 is plausible if the applicant does not recall the flowpath for the bypass line. For example, if the bypass line tapped off downstream of the heat exchanger and diverted back to the pump suction (common design for many Westinghouse RHR system Hx bypass lines and the same as the arrangement for the ND pump recirc valves), it would decrease the flow through the Hx if the bypass valve was initially throttled and then failed closed. Therefore, it is plausible for the applicant to conclude that NC system temperature would increase in this case.

Answer C Discussion

INCORRECT: See explanation above.

PLAUSIBLE: Part 1 is plausible because ND-34 does fail open on a loss of instrument air.

Part 2 is plausible if the applicant does not understand the flowpath for the Hx bypass line. For example, if the bypass line tapped off downstream of the heat exchanger and diverted back to the pump suction (common design for many Westinghouse RHR system Hx bypass lines and the same as the arrangement for the ND pump recirc valves), it would increase the flow through the Hx if the bypass valve was initially throttled or closed and then failed open. Therefore, it is plausible for the applicant to conclude that NC system temperature would decrease in this case.

Answer D Discussion

INCORRECT: See explanation above.

PLAUSIBLE: Part 1 is plausible If the applicant does not understand how ND-34 fails on a loss of air. It is plausible for the applicant to conclude that ND-34 fails closed on a loss of VI since this would prevent the ND Hx from being robbed of flow.

If ND-34 closed on a loss of VI, flow would increase through the ND Hx causing NC system temperature to decrease making Part 2 plausible.

Basis for meeting the KA

The K/A is matched because a failure of an RHR system component has occurred (ND-34 failing open) and the applicant must determine the effect that this malfunction has on NC system temperature.

Basis for Hi Cog

This is an analysis level question because it requires more than one mental step. The applicant must first recall from memory how ND-34 fails on a loss of air. The applicant must then determine from that failure how ND system flowrate through the ND Hx is affected and the resultant effect on NC system temeperature.

Basis for SRO only

Job Level	Cognitive Level	QuestionType	Question Source
RO	Comprehension	NEW	

Development References	Student References Provided
OP-MC-PS-ND Section 2.3.6 Learning Objective PSND008	

SYS005 K3.01 - Residual Heat Removal System (RHRS)

Knowledge of the effect that a loss or malfunction of the RHRS will have on the following: (CFR: 41.7 / 45.6)

RCS .....

QUESTION 4 2504 A

401-9 Comments:

Remarks/Status

401-9 Comments:

No comment.

Resolution / Comments:

N/A

Question 4 References:

From Lesson Plan OP-MC-PS-ND Section 2.3.6:

ND-18 and ND-33 are used during residual heat removal mode of operation to control bypass flow around ND Heat Exchanger B and A respectively. Opening ND-18 and ND-33 would allow the respective train's ND heat exchanger to be bypassed during the ECCS recirculation mode if a loss of instrument air were to occur (since bypass valve ND-34 fails open upon a loss of instrument air). Therefore, these valves are required to remain closed during Modes 1 - 3, when the ECCS system is required. If opened during Mode 4 for residual heat removal temperature control, they shall be capable of manual closing upon ECCS actuation. If opened for residual heat removal mode, these valves shall be closed prior to swapover to sump recirculation mode of ECCS operation, for the respective ND train to be operable. Valve status is also provided to the OAC.

2.3.6 ND-34 (A & B ND HX Bypass)

This valve can be operated from MC11 or the ASP by a manual loader. This valve is used in conjunction with ND-14 and ND-29 to control NCS cooldown rate and temperature. ND-34 will fail open on a loss of Instrument Air (VI). ND-34 is regulated to maintain a constant return flow to the NCS. A constant flow rate allows the ND pumps to continuously operate on a more efficient part of their performance curve. Flow through this return line is higher during the initial stages of NCS cooldown to limit the ND System heatup rate, and thus thermal shock to the ND heat exchangers. This valve is not required for the unit to achieve cooldown and is therefore not safety related.

2.3.7 ND-15B (Train B ND to Hot Leg Isol), ND-30A (Train A ND to Hot Leg Isol)

These motor operated valves are controlled from the ND section of MC11 in the Control Room by open/close pushbuttons. These "fail as is" valves provide cross tie isolations for the ND Trains. These valves have no auto open/close control features. These valves are opened in standby readiness, but closed in cold leg recirc.

On an ECCS actuation, the ND System must be capable of providing flow to all four NCS loops (even with single failure). By having ND-15B and ND-30A open, either ND pump is capable of supplying all four NCS loops. Therefore, closing either ND-15B or ND-30A in Mode 1, 2, or 3 will make both ND trains inoperable. An alarm is actuated on the BOP panel whenever either of these valves reaches the "closed" position.

2.3.8 ND-67B (B ND Pump & B HX Mini-flow) and ND-68A (A ND Pump & A HX Mini-flow)

These safety related, normally closed motor operated valves are interlocked to automatically open on a train related pump start when ND flow through its train related ND heat exchanger falls below the 750 gpm setpoint (as sensed by NDFT5250 for pump A and NDFT5260 for pump B). **When flow reaches the 1400 gpm setpoint or if the associated pump stops, the valve will close.**

2.3.9 ND-35 (ND System to FWST Isolation)

This valve is an 8" manually operated gate valve. ND-35 is used during outage periods to transfer water from the reactor coolant system or refueling canal to the refueling water storage tank. ND-35 is also used as a gravity flow path from the

SYS006 K1.14 - Emergency Core Cooling System (ECCS)
nowledge of the physical connections and/or cause-effect relationships between the ECCS and the following systems: (CFR: 41.2 to 41.9 / 5.7 to 45.8)
IAS .....

Concerning the operation of Engineering Safeguards Modulating Control Valves:

Upon receipt of a __(1)__ signal, the modulating control valve circuit will __(2)__ the control valves.

Which ONE (1) of the following completes the statement above?

A. 1. Safety Injection ONLY
2. maintain VI aligned to

B. 1. Safety Injection ONLY
2. vent air off

C. 1. Safety Injection OR Blackout
2. maintain VI aligned to

D. 1. Safety Injection OR Blackout
2. vent air off

General Discussion

The modulating control valve circuitry controls the solenoids supplying air to selected safety related control valves. These control valves are normally controlled by other non-safety controllers and instrumentation. In order to prevent these non-safety controls from causing the control valves to assume an improper position after a safety event, these safety related solenoids valves will vent air off its control valve to cause it to assume its "safe" position. These solenoid valves de-energize upon receipt of a safety injection signal from the D/G load sequencer.

Answer A Discussion

INCORRECT: See explanation above

PLAUSIBLE: First part is correct and therefore plausible.

Second part is plausible because some of the modulating valves contain individual VI accumulator tanks to ensure the valves do not reposition in the event of a loss of VI. It would therefore be reasonable for the applicant to believe that VI would be aligned to the affected valves.

Answer B Discussion

CORRECT: See explanation above

Answer C Discussion

INCORRECT: See explanation above

PLAUSIBLE: First part includes a B/O signal in addition to the SI signal. Both are ESF signals, both come from the sequencer and both result is the repositioning of many safety related valves. It would be reasonable for the applicant to believe the modulating control valves are affected by both signals.

Second part is plausible because some of the modulating valves contain individual VI accumulator tanks to ensure the valves do not reposition in the event of a loss of VI. It would therefore be reasonable for the applicant to believe that VI would be aligned to the affected valves.

Answer D Discussion

INCORRECT: See explanation above

PLAUSIBLE: First part includes a B/O signal in addition to the SI signal. Both are ESF signals, both come from the sequencer and both result is the repositioning of many safety related valves. It would be reasonable for the applicant to believe the modulating control valves are affected by both signals.

Second part of the answer is correct and therefore plausible.

Basis for meeting the KA

The K/A is matched because the applicant is being tested on the cause-effect relationship between an ECCS actuation signal and the resulting effect on ECCS valves which are supplied by the IAS. The signal results in a change in alignment of the VI supply to these control valves.

Basis for Hi Cog

Basis for SRO only

Job Level	Cognitive Level	QuestionType	Question Source
RO	Memory	NEW	

Development References

OP-MC-PSS-RN Page 39 (Rev 43)
From OP-MC-PSS-RN Page 41 (Rev 43)

OP-MC-PSS-RN Obj: 12

Student References Provided

SYS006 K1.14 - Emergency Core Cooling System (ECCS)
Knowledge of the physical connections and/or cause-effect relationships between the ECCS and the following systems: (CFR: 41.2 to 41.9 / 45.7 to 45.8)
IAS .....

401-9 Comments:

Remarks/Status

401-9 Comments:

Distractors A and C: Change "align VI" to "Maintain it's alignment" because some of the modulating valves do not reposition in the event of a loss of VI. This will lend the 2nd part of distractors A and C more plausible.

Resolution / Comments:

Changed "align VI to" to "maintain VI aligned to". See attached file for proposed revision.

Question 5 References:

OP-MC-PSS-RN Obj: 12

OBJECTIVES

	OBJECTIVE	NLO	NLOR	LPRO	LPSO	LOR
8	Describe the RN System Flow path (suction source, essential and non-essential header alignment and discharge point) for the following:					
	• Normal operation	X	X	X	X	
	• Operation following a Blackout	X	X	X	X	X
	• Operation following a Safety Injection	X	X	X	X	X
9	Explain the reason for taking a suction on the low level intake.	X	X	X	X	
10	Concerning the RN essential and non-essential headers:					
	• List the loads supplied by each header	X	X	X	X	
	• Identify which loads are automatically supplied on a Blackout, Safety injection and/or Phase B.	X	X	X	X	X
11	Explain the reason for **NOT** isolating the auxiliary building non-essential header on a Blackout signal.	X	X	X	X	X
12	Describe the operation including any interlocks for the following valves:	X	X	X	X	X
	• RN42A (AB Non Ess Supply Isol)					
	• RN171B (B D/G Supply Isol)					
	• 1RN1 (Low Level Intake Isolation)					
	• Engineering Safeguards Modulating Control Valves and Reset Circuitry					
13	Describe the operational concerns when cycling RN valves that are shared between Unit 1 and Unit 2.			X	X	X
14	Given a parameter associated with the RN system, describe the indications for that parameter.	X	X	X	X	
15	Given a Limit and Precaution associated with the RN System, discuss its basis and when it applies.	X	X	X	X	X

From OP-MC-PSS-RN Page 39 (Rev 43)

The KC HX Supply isolation Valves (RN-86A, 187B) have an AUTO/MANUAL mode select switch and an open/close pushbutton on MC11. The open/close pushbuttons are only operable when the mode switch is in the Manual position. If the mode select switch is in the AUTO position, the valve will auto open when the train related RN pump starts and will receive a signal to close when the train related RN pump is stopped. In either the AUTO or MANUAL mode of operation, these valves will automatically open upon receipt of a Blackout or Safety injection signal. Also, the Blackout and Safety injection signal is interlocked with the AUTO portion of the valve closure circuitry to prevent the valve from automatically closing while a Blackout or Safety injection signal is still present. The valves are normally selected to the AUTO mode.

Low Level intake isolation valve 1RN1 is a non-safety related MOV controlled from 1MC11 by a pushbutton which is covered to prevent operation of the valve except in an emergency. The valve is wired through two breakers in MCC SMXL. The breaker in compartment 3C is normally disconnected which allows power to the valve to be disconnected while still leaving control power available for position indication in the Control Room. Therefore in order to close 1RN1, power must be restored by reconnecting the breaker in MCC SMXL compartment 3C and using the manual close pushbutton. If maintenance activities require shifting RN suction to the RC cross over or SNSWP such that 1RN1 will be closed, compensatory action will be required for Train A to prevent specific valves from automatically re-aligning to LLI on a S_S or BO signal.

0RN-4AC (Train 1B & 2B RC Supply) and 0RN-148AC (Train 1A & 2A Disch to RC) will automatically open on SSF transfer. In addition to 0RN-4AC and 0RN148AC, valves 0RN-147AC, 0RN-283AC, 0RN-301AC, 0RN10AC, and 0RN12AC can be operated from the SSF. The RN controls and indications located in the Standby Shutdown Facility will be covered in Lesson plan OP-MC-CP-AD.

The **Train A(B) Engineering Safeguards Modulating Control Valve Reset** Pushbuttons and reset lights are located on the RN section of MC11. The modulating control valve circuitry controls the solenoids supplying air to selected safety related control valves. These control valves are normally controlled by other non-safety controllers and instrumentation. In order to prevent these non-safety controls from causing the control valves to assume an improper position after a safety event, these safety related solenoids valves will vent air off its control valve to cause it to assume its "safe" position. These solenoid valves de-energize upon receipt of a safety injection signal from the D/G load sequencer.

The modulating reset circuitry has a mechanical latching relay which will maintain the valves in their safe position after the safety injection signal is reset. To gain control of these valves, the safety injection signal must be reset and the operator must depress the train related modulating valve reset pushbutton. The indicating light is labeled "RESET" and is normally illuminated. Upon receipt of a Safety Injection Signal, the light will be off. Following reset of the latching relay, the light will illuminate. Failure of the fuse in the pushbutton circuit renders all modulating valves inoperable. PIP 0-M96-2018 in section 5.2 covers an operating experience associated with these fuses.

From OP-MC-PSS-RN Page 41 (Rev 43)

The following are the Train A modulating valves:		Safe Position
• RN-89A	(RN to A KC HX Control)	Open*
• RN-22A	(RN Strainer A Backflush Automatic Drain Isol)	Close**
• ND-29	(A ND HX Outlet)	Open
• KC-57A	(A ND HX Return)	Open

The following are the Train B modulating valves:		Safe Position
• RN-190B	(RN to B KC HX Control)	Open*
• RN-26B	(RN Strainer B Backflush Automatic Drain Isol)	Close**
• ND-14	(B ND HX Outlet)	Open
• KC-82B	(B ND HX Return)	Open

* Theses valves open to their travel stop position.

** Position of these valves does not affect backwash capability.

2.6.2 Cycling Shared Valves

Objective # 13

When performing the cycling of shared RN valves the following items need to be considered to prevent undesired system alignments.

- Ensure RN is aligned per the unit specific operating procedure to allow valve cycling.
- Ensure that an adequate flow path exists for operating components. Review OAC graphics and any other pertinent information to evaluate the effects of the valve stroke. Do not rely on the VST or functional test to accomplish this task.
- Ensure the opposite units RO evaluates the cycling of shared RN valves prior to cycling the valve.

SYS006 K6.02 - Emergency Core Cooling System (ECCS)
nowledge of the effect of a loss or malfunction on the following will have on the ECCS: (CFR: 41.7 / 45.7)
ore flood tanks (accumulators) .....

Unit 1 is operating at 100% RTP.

Given the following indications for Unit 1 CLAs:

	1A	1B	1C	1D
Pressure	630 PSIG	570 PSIG	590 PSIG	615 PSIG
Level	7305 GAL	6970 GAL	6890 GAL	7375 GAL

Which ONE (1) of the following describes how the ECCS system is affected (if at all) by the CLA parameters listed above?

A. '1B' CLA ONLY is INOPERABLE.

B. '1C' CLA ONLY is INOPERABLE.

C. '1A' and '1C' CLAs are INOPERABLE.

D. '1B' and '1D' CLAs are INOPERABLE.

General Discussion

IAW Tech Spec 3.5.1, Accumulators, the required range of level for a Cold Leg Accumulator to be OPERABLE is greater than or equal to 6870 gals and less than or equal to 7342 gal. Based on level indications, CLA '1D' is INOPERABLE.

The required pressure range for a Cold Leg Accumulator to be OPERABLE is greater than or equal to 585 PSIG and less than or equal to 639 PSIG. Based on the pressure indications, CLA '1B' is INOPERABLE.

Answer A Discussion

INCORRECT: See explanation above

PLAUSIBLE: This answer is plausible if the applicant does not recall the pressure and level bands for the CLAs. 1B CLA being INOPERABLE is correct. However, 1D CLA is also INOPERABLE because it's level is high out of the Tech Spec required band. If the applicant does not recall the level and pressure bands correctly, they can conclude that 1D CLA level is within limits.

Answer B Discussion

INCORRECT: See explanation above

PLAUSIBLE: This answer is plausible if the applicant does not recall the pressure and level bands for the CLAs. If they do not recall the bands correctly, they can conclude that 1C CLA is INOPERABLE since it's level is the lowest of all CLAs.

Answer C Discussion

INCORRECT: See explanation above

PLAUSIBLE: If the applicant does not recall the pressure and level ranges for CLA operability, this answer is plausible since CLA '1A' has the highest pressure and CLA '1C' has the lowest level. If the applicant does not know the correct ranges, they could conclude that CLA '1A' pressure was out-of-spec high and that CLA '1C' level was out-of-spec low. However, both pressure and level for CLA '1A' and '1C' are in spec.

Answer D Discussion

CORRECT: See explanation above.

Basis for meeting the KA

The K/A is asking for "the effect of a loss or malfunction on the Core Flood Tanks (Accumulators) on the ECCS". Since the CLAs are part of the ECCS as defined by UFSAR Section 6.3.2.2.1) anything that affects the operability of the CLAs in turn affects the operability of the ECCS and hence its ability to perform its design function. Thus, CLAs with operating parameters outside of their Tech Spec limits affects the ability of ECCS to perform its design function. Therefore, the KA is matched.

Basis for Hi Cog

This is a higher cognitive level question (IAW NUREG-1021 Appendix A, Step 3.C.c) because the applicant must associate multiple data points. First, the applicant must recall a setpoint from memory (in fact two ranges of setpoints). Then, the applicant must compare the data given in the stem of the question to the recalled setpoints to arrive at the correct answer. Since the question requires two mental steps to answer the question correctly, this is a higher cognitive level question.

Basis for SRO only

Job Level	Cognitive Level	QuestionType	Question Source
RO	Comprehension	NEW	

Development References	Student References Provided
Tech Spec 3.5.1, Accumulators	

SYS006 K6.02 - Emergency Core Cooling System (ECCS)
Knowledge of the effect of a loss or malfunction on the following will have on the ECCS: (CFR: 41.7 / 45.7)
Core flood tanks (accumulators) .....

401-9 Comments:	Remarks/Status
	401-9 Comments: Change A to '1B' ONLY is inoperable Change B to '1C' ONLY is inoperable All or None are poor distractors and rarely picked if applicant is

QUESTION 6 2506 D

not sure. 1B and 1C have the lowest pressure and level respectively.
Delete (if at all) from the stem
This Q is U because there are 2 NP distractors

Resolution / Comments:

Changed question per Lead Examiner's recommendation. See attached file for proposed revision which includes new distracter analysis for "A" and "B".

Question 6 References:

3.5 EMERGENCY CORE COOLING SYSTEMS (ECCS)

3.5.1 Accumulators

LCO 3.5.1 Four ECCS accumulators shall be OPERABLE.

APPLICABILITY: MODES 1 and 2,
MODE 3 with RCS pressure > 1000 psig.

ACTIONS

CONDITION	REQUIRED ACTION	COMPLETION TIME
A. One accumulator inoperable due to boron concentration not within limits.	A.1 Restore boron concentration to within limits.	72 hours
B. One accumulator inoperable for reasons other than Condition A.	B.1 Restore accumulator to OPERABLE status.	24 hours
C. Required Action and associated Completion Time of Condition A or B not met.	C.1 Be in MODE 3. AND C.2 Reduce RCS pressure to ≤ 1000 psig.	6 hours 12 hours
D. Two or more accumulators inoperable.	D.1 Enter LCO 3.0.3.	Immediately

SURVEILLANCE REQUIREMENTS

SURVEILLANCE		FREQUENCY
SR 3.5.1.1	Verify each accumulator isolation valve is fully open.	12 hours
SR 3.5.1.2	Verify borated water volume in each accumulator is ≥ 6870 gallons and ≤ 7342 gallons.	12 hours
SR 3.5.1.3	Verify nitrogen cover pressure in each accumulator is ≥ 585 psig and ≤ 639 psig.	12 hours
SR 3.5.1.4	Verify boron concentration in each accumulator is within the limits specified in the COLR.	31 days AND -------NOTE-------- Only required to be performed for affected accumulators ---------- Once within 6 hours after each solution volume increase of ≥ 1% of tank volume that is not the result of addition from the refueling water storage tank
SR 3.5.1.5	Verify power is removed from each accumulator isolation valve operator when RCS pressure is > 1000 psig.	31 days

SYS007 K5.02 - Pressurizer Relief Tank/Quench Tank System (PRTS)
nowledge of the operational implications of the following concepts as they apply to PRTS: (CFR: 41.5 / 45.7)
Method of forming a steam bubble in the PZR .....

Given the following conditions on Unit 1:

- A unit startup is in progress following refueling
- The crew is preparing to draw a bubble in the Pressurizer.
- NC system pressure is 360 PSIG
- NC system is in Solid Ops with LTOP in service
- The 1A NC pump is RUNNING

1. Per Selected Licensee Commitment 16.5-4 (Pressurizer), what is the MAXIMUM allowable Pressurizer heat up rate?

2. Based on current plant conditions, how are non-condensable gases removed from the NC system?

A. 1. 75°F in any one hour period
   2. Cycle Pressurizer PORVs

B. 1. 75°F in any one hour period
   2. Cycle the Reactor Vessel Head vents

C. 1. 100°F in any one hour period
   2. Cycle Pressurizer PORVs

D. 1. 100°F in any one hour period
   2. Cycle the Reactor Vessel Head vents

General Discussion

There is no tie between the pressurizer and the PRT when forming a bubble at McGuire. The Pzr is taken water solid first with non-condensibiles removed via the PORV's, then heated to saturation while water solid. After SU-8 is entered with the Pzr water solid, non-condensable gasses are removed from the Reactor Coolant System via the Rx Head Vents. In SU-8 with NC pumps running, the PORVs would never be used to vent the NC system. Then letdown flow is increased to draw the bubble.

PZR Heatup rate per SLC 16.5-4 is 100 degrees F in any 1 hour period.

Answer A Discussion

INCORRECT: See explanation above.

PLAUSIBLE: Part 1 is plausible because 75°F in one hour is administrative limit for PZR heat up.

Part 2 is plausible because cycling the PORV's would vent non- condensibiles but once SU-8 is entered and a NC Pump is placed in service, this is not an option.

Answer B Discussion

INCORRECT: See explanation above.

PLAUSIBLE: Part 1 is plausible because answer 75°F in one hour is administrative limit for PZR heat up.

Part 2 is correct.

Answer C Discussion

INCORRECT: See explanation above.

PLAUSIBLE: Part 1 is correct.

Part 2 is plausible because cycling the PORV's would vent non- condensibiles but once SU-8 is entered and a NC Pump is placed in service, this is not an option.

Answer D Discussion

CORRECT: See explanation above.

Basis for meeting the KA

KA is matched because the candidate is required to know the methodology for removing non-condensable gasses from the NC System prior to bubble formation. This along with testing knowledge of the PZR Heatup rates examines the operational implications of forming a steam bubble in the PZR. Again, at MNS there is no tie between the Pressurizer and PRT with specific regards to drawing a bubble.

Basis for Hi Cog

Basis for SRO only

Job Level	Cognitive Level	QuestionType	Question Source
RO	Memory	NEW	

Development References

OP/2/A/6100/SU-8, Heatup to 200 degrees F, Rev. 30, Enclosure 4.2, page 3

Lesson Plan OP-MC-PS-NC, Reactor Coolant System, Rev. 30, page 19

OP-MC-PS-NC Obj. 4

Student References Provided

SYS007 K5.02 - Pressurizer Relief Tank/Quench Tank System (PRTS)

Knowledge of the operational implications of the following concepts as they apply to PRTS: (CFR: 41.5 / 45.7)

Method of forming a steam bubble in the PZR .....

401-9 Comments:

Remarks/Status

401-9 Comments:

QUESTION 7 2507 D

No comment.

Resolution / Comments:

N/A

Question 7 References:

	OBJECTIVE	NLO	NLOR	LPRO	LPSO	LOR
1	State the purpose of the Reactor Coolant System.	X	X	X	X	
2	Describe the flow path in the Reactor Coolant System with all NC Pumps running and with less than all pumps running.		X	X	X	
3	Describe the indications which would be used to detect a reactor vessel head O-ring leak and how this line can be isolated.		X	X	X	X
4	Concerning the manual and remote reactor vessel head vents: • state their purpose including when each would be used • state how the vents are operated		 X X	 X X	 X X	 X
5	Sketch the Reactor Coolant System and include all penetrations and instrumentation associated with system operation and control per Drawing 7.5.	X	X	X	X	
6	State the purpose of the pressurizer.	X	X	X	X	
7	Describe how the inherent characteristics of the pressurizer reduces the effects of pressure transients.	X	X	X	X	
8	Explain why the surge line is connected to the NC hot leg and why the spray line is connected to the NC cold leg.	X	X	X	X	
9	State the purpose of maintaining a constant spray flow to the pressurizer.	X	X	X	X	
10	State how Pzr spray flow will be effected if only A or B NCP is operating.	X	X	X	X	
11	State the purpose of providing the capability of auxiliary spray flow to the pressurizer.	X	X	X	X	

From Lesson Plan OP-MC-PS-NC:

2.0 COMPONENT DESCRIPTION

2.1 Reactor Vessel

The reactor vessel is cylindrical with a hemispherical bottom and a removal hemispherical flanged top. The vessel contains the core (fuel), core support structures, control rods, neutron shield pads and four (4) inlet and four (4) outlet nozzles. The flow through the core enters the inlet nozzles, down the core barrel-wall annulus and turns up at the bottom of the vessel and travels up the core and then out the outlet nozzles. The inlet and outlet nozzles are spaced 45 ^{0}F apart and are tapered to reduce loop pressure drop. The vessel design provides the smallest, most economical volume to house the internal components.

Objective # 3

The reactor vessel flanged top is sealed by two metallic O-rings. To monitor the integrity of this seal, leak detection is provided by two leakoff connections. One connection samples between the inner and outer O-ring and the other samples outside the outer O-ring. Both of these lines combine to a common header which has a manual isolation valve, NC23, normally open during operation (refer to **Drawing 7.2**). The leakoff line between the two seals has an isolation valve, NC-25A , which can be closed from 1(2)MC-10 if leakage is excessive. The other leakoff line has a manual isolation valve, NC24, which is normally open. During normal operation, excessive seal leakage is detected by a temperature detector which will provide an alarm on 1(2)AD6 "Rx Vessel Flange Leakoff Hi Temp" , if the line temperature increases 20^0 F above ambient. A meter on 1(2)MC10 provides indication of leakoff temperature.

Objective # 4

The reactor vessel head has two vent methods, manual and remote (refer to **Drawing 7.3**). The **local manual head vent** is provided to ensure air is removed from the reactor vessel head area during NCS fill. This line has a flow sight glass to provide indication that the vessel is vented. The **remote operated vent** is comprised of two branches in parallel (train A & B) with two solenoid valves in each branch. Both trains (valves NC 272A,C, 273A,C, 274B, and 275B) can be operated from the control room panel 1(2)MC05. These valves are used to vent the reactor vessel head to PRT during accident conditions. The "A" train vent valves are used as a letdown path to control Pressurizer level during SSF operation.

The reactor vessel and internals are covered in more detail in lesson plan OP-MC-PS-RVI.

☐ 3.3 Continue NC System heatup to 110 - 195°F by controlling ND System flow and KC flow to ND Hx.

NOTE:	Non-condensible gases will continue to collect in Reactor Vessel Head for several hours.

3.4 To remove non-condensible gases from Reactor Vessel Head, periodically perform the following:

3.4.1 Open the following:

_____ • 2NC-272A,C (Trn 2A Head Vent to PRT Isol)
_____ • 2NC-273A,C (Trn 2A Head Vent to PRT Isol)
_____ • 2NC-274B (Trn 2B Head Vent to PRT Isol)
_____ • 2NC-275B (Trn 2B Head Vent to PRT Isol)

_____ 3.4.2 **WHEN** visible increase in PRT level observed without appreciable increase in PRT pressure, close the following:

_____ • 2NC-272A,C (Trn 2A Head Vent to PRT Isol)
_____ • 2NC-273A,C (Trn 2A Head Vent to PRT Isol)
_____ • 2NC-274B (Trn 2B Head Vent to PRT Isol)
_____ • 2NC-275B (Trn 2B Head Vent to PRT Isol)

_____ 3.5 **WHEN** opening Reactor Head Vent Solenoid Valves no longer effective in removing non-condensible gases from Reactor Vessel Head **AND** normal operating conditions have been established in the PRT per OP/2/A/6150/004 (Pressurizer Relief Tank), perform the following:

_____ 3.5.1 Close 2NC-51 (PRT Vent).

_____ 3.5.2 Remove temporary filter unit from 2NC-51.

_____ 3.5.3 Install pipe cap on 2NC-51.

_____ 3.6 Notify Primary Chemistry to check Pzr Oxygen concentration less than 100 ppb.

_____ _____/_____
Person Notified Date Time

Unit 2

_____ 3.7 **IF** Pzr Oxygen Concentration is greater than 100 ppb **AND** additional hydrazine is needed in the Pzr, perform the following:

_____ 3.7.1 Open 2NV-21A (NV Spray to Pzr Isol).

3.7.2 Ensure the following closed:

- _____ 2NV-13B (NV Supply to A NC Loop Isol)
- _____ 2NV-16A (NV Supply to D NC Loop Isol)
- _____ 2NC-27 (A Loop Pzr Spray Control)
- _____ 2NC-29 (B Loop Pzr Spray Control)

NOTE: The following step will ensure sufficient flow via 2NV-21A (NV Spray to Pzr Isol) to add hydrazine to the Pzr while protecting NC Pump seals.

3.7.3 Maintain a minimum of 6 gpm NC Pump seal injection flow by adjusting the following:

- _____ 2NV-241 (Seal Inj Flow Control
- _____ 2NV-238 (Charging Line Flow Control)

_____ 3.7.4 Notify Primary Chemistry to add hydrazine.

_____ _____/_____
Person Notified Date Time

_____ 3.7.5 **WHEN** hydrazine added, open:

- _____ 2NV-13B (NV Supply to A NC Loop Isol) (odd cycle)

OR

- _____ 2NV-16A (NV Supply to D NC Loop Isol) (even cycle)

_____ 3.7.6 Close 2NV-21A (NV Spray to Pzr Isol).

3.7.7 Open spray valve that will provide maximum flow to provide Pzr mixing:

- _____ 2NC-29 (B Loop Pzr Spray Control)
- _____ 2NC-27 (A Loop Pzr Spray Control)
- _____ 2NV-840A (ND to Pzr Aux Spray Control)

Unit 2

3.7.8 Maintain Pzr level and NC Pump seal injection flows by adjusting the following:

_____ • 2NV-241 (Seal Inj Flow Control)
_____ • 2NV-238 (Charging Line Flow Control)

_____ 3.7.9 Notify Primary Chemistry to inform Control Room when Pzr Oxygen concentration less than 100 ppb.

_____ _____/_____
Person Notified Date Time

_____ 3.8 Stop 2A Containment Aux Carbon Filter Fan.

3.9 Draw a bubble in the Pzr as follows:

_____ 3.9.1 Ensure PT/2/A/4600/008 (Surveillance Requirements For Unit Heatup) in progress.

3.9.2 Monitor the following parameters:

- ☐ Letdown flow (M2A0764)
- ☐ Charging flow (M2A0758)
- ☐ Pzr Surge Line temperature (M2A0855)
- ☐ Pzr Steam Space temperature (M2A0849)
- ☐ Pzr Water Space temperature (M2A0843)
- ☐ Pzr Surge Line - Pzr Water temp D/T (M2P4322)
- ☐ WR NC System pressure (M2A0826)
- ☐ Low Range NC System pressure (M2A0845)
- ☐ VCT level (M2A0734)

3.9.3 Ensure the following:

_____ • NC System Tavg 110 - 195°F and stable
_____ • NC System pressure 310 - 340 psig and stable
_____ • Letdown flow 80 - 100 gpm
_____ • NC System Oxygen concentration less than 100 ppb
_____ • Pzr Oxygen concentration less than 100 ppb

_____ 3.9.4 Adjust 2NV-121 (ND Letdown Control) to control NC System pressure 310 - 340 psig while fully opening 2NV-124 (Letdown Pressure Control).

☐ 3.9.5 Maintain NC System pressure 310 - 340 psig.

Unit 2

16.5 REACTOR COOLANT SYSTEM

16.5.8 Pressurizer

COMMITMENT The pressurizer temperature shall be limited to:

a. A maximum heatup of 100°F in any 1-hour period,

b. A maximum cooldown of 200°F in any 1-hour period, and

c. A maximum spray water temperature differential of 320°F.

APPLICABILITY At all times.

REMEDIAL ACTIONS

CONDITION	REQUIRED ACTION	COMPLETION TIME
A. ----------NOTE---------- All Required Actions must be completed whenever this Condition is entered. ---------- Pressurizer temperature not within limits.	A.1 Restore pressurizer temperature to within limits.	30 minutes
	AND	
	A.2 Perform engineering evaluation to determine effects of the out-of-limit condition on the structural integrity of the pressurizer.	72 hours
	AND	
	A.3 Determine that the pressurizer remains acceptable for continued operation.	72 hours
B. Required Action and associated Completion Time not met.	B.1 Be in MODE 3.	6 hours
	AND	
	B.2 Reduce pressurizer pressure to < 500 psig.	36 hours

Heatup to 200 Degrees F

1. Purpose

Direct activities to begin heating the NC System to 200°F.

2. Limits and Precautions

2.1 This procedure is Reactivity Management related because it controls activities that can affect core reactivity by changing NC System temperature. (R.M.)

2.2 PD Pump operation while in LTOP mode is prohibited unless directed by an EP or AP. (overpressurization concern) {PIP M95-0541})

2.3 WHEN one or more Pzr PORVs and associated isolation valves are open, heatup rate is limited to less than or equal to 50°F/hr (Administrative) and less than or equal to 60°F/hr (Tech Spec).

2.4 With NC System temperature greater than 200°F, KC flow to each ND Hx shall be greater than 2000 gpm.

2.5 Exceeding 160°F in the NC System until at least one NC Pump is in service is prohibited to minimize cold water addition to the Reactor Core resulting in positive reactivity addition and pressure excursion during water solid operation when starting an NC Pump.

2.6 Minimize D/T between S/Gs secondary inventory and operating ND trains "ND to NC Cold Leg" prior to starting NC Pumps. {PIP 99-5022}

2.7 In "LOW PRESS" Mode, Pzr PORVs will open on NC narrow range pressure between 378 – 382 psig. Narrow range pressure can be monitored by OAC points M2A1359 (2NC-32B) and M2A1365 (2NC-34A).

2.8 Minimum VCT pressure is 15 psig with NC Pump(s) in service.

2.9 Maximum NCDT pressure is 8 psig with NC Pump(s) in service.

2.10 Minimum NCDT and PRT pressure is 0 psig. {PIP 99-5074}

2.11 Pressurizer heatup rates shall be less than 75°F/hr (SLC limit is 100°F/hr).

2.12 Maximum Boron concentration difference between NC System and Pzr is 50 ppm.

2.13 IF temperature difference between Pzr and spray fluid is greater than 320°F, use of Auxiliary Spray is prohibited.

SYS008 K4.02 - Component Cooling Water System (CCWS)
Knowledge of CCWS design feature(s) and/or interlock(s) which provide for the following: (CFR: 41.7)
Operation of the surge tank, including the associated valves and controls ..

Concerning the operation of 1KC-122 (KC Surge Tank Vent Valve):

When a __(1)__ alarm is received on 1EMF-46A(B), 1KC-122 will automatically close and the valve __(2)__.

Which ONE (1) of the following completes the statement above?

A. 1. Trip 1
   2. must be locally re-opened

B. 1. Trip 1
   2. will automatically re-open when the alarm clears

C. 1. Trip 2
   2. must be locally re-opened

D. 1. Trip 2
   2. will automatically re-open when the alarm clears

General Discussion

KC -122 is located in the surge tank vent line and vents the tank to atmosphere. It is controlled from a local station at the surge tank by a two position, OPEN/CLOSE, pushbutton. It is normally open and receives a close signal on EMF-46A & B Trip 2 alarm. The OPEN position latches in so when the EMF signal clears, the valve will re-open.

Answer A Discussion

INCORRECT: See explanation above.

PLAUSIBLE: Part 1 is plausible because there are some EMF's which have control actions for a Trip 1 alarm but EMF-46 is not one of them. For example, a high radiation alarm (Trip 1) on EMF-36 (HH) will shut of the 1EMF-35/36/37 sample pump.

Part 2 is plausible because 1KC-122 is unusual in that it will reopen when the high rad alarm clears. Every other valve which receives a close signal on a high rad must be manually reopened.

Answer B Discussion

INCORRECT: See explanation above.

PLAUSIBLE: Part 1 is plausible because there are some EMF's which have control actions for a Trip 1 alarm but EMF-46 is not one of them. For example, a high radiation alarm (Trip 1) on EMF-36 (HH) will shut of the 1EMF-35/36/37 sample pump.

Part 2 is correct.

Answer C Discussion

INCORRECT: See explanation above.

PLAUSIBLE: Part 1 is correct.

Part 2 is plausible because 1KC-122 is unusual in that it will reopen when the high rad alarm clears. Every other valve which receives a close signal on a high rad must be manually reopened.

Answer D Discussion

CORRECT: See explanation above

Basis for meeting the KA

K/A asks for knowledge of the design features and interlocks associated with operation of the KC surge tank including associated valves. 1KC-122 is the normally open vent valve on the surge tank and the question is soliciting knowledge concerning both the design and interlocks associated with this valve.

Basis for Hi Cog

Basis for SRO only

Job Level	Cognitive Level	QuestionType	Question Source
RO	Memory	BANK	MNS Bank Q PSSKCN03

Development References

Lesson Plan OP-MC-PSS-KC Pg. 21 (Rev 26)
Lesson Plan OP-MC-WE-EMF page 33 (Rev 30)

OP-MC-PSS-KC Obj. 10

Student References Provided

SYS008 K4.02 - Component Cooling Water System (CCWS)
Knowledge of CCWS design feature(s) and/or interlock(s) which provide for the following: (CFR: 41.7)
Operation of the surge tank, including the associated valves and controls ..

401-9 Comments:

Remarks/Status

401-9 Comments:

No comment.

QUESTION 8 2508 D

Resolution / Comments:

N/A

Question 8 References:

OBJECTIVES

10	Concerning the Component Cooling Water System: • Describe the local controls and list the indications, including operation of the local control for KC-122. • Describe the control room controls and list the indications.	X	X	X X	X X	X
11	State the normal and backup sources of makeup water to the system.	X	X	X	X	
12	Describe the discharge paths of the Component Cooling Water Drain Tank Pump.	X	X	X	X	
13	Given a limit and/or precaution associated with an Operating Procedure, discuss it's basis and applicability.	X	X	X	X	X
14	Concerning AP/1/A/5500/21, Loss of Component Cooling Water: • State the purpose of the AP. • Recognize the symptoms that would require implementation of the AP.			X	X	X
15	Concerning the Technical Specifications related to the Component Cooling Water System: • Given the LCO title, state the LCO (including any COLR values) and applicability. • For any LCO's that have action required within one hour, state the action. • Given a set of parameter values or system conditions, determine if any Tech Spec LCO's is (are) not met and any action(s) required within one hour. • Given a set of plant parameters or system conditions and the appropriate Tech Specs, determine required actions. • Discuss the bases for a given Tech Spec LCO or Safety Limit.			X X X	X X X X	X X X X *

From Lesson Plan OP-MC-PSS-KC Pg. 21 (Rev 26)

2.6.6 ND Heat Exchanger Cooling Water Isolation Valves (KC-56 & 81).

These valves are located on the inlet of the ND Heat Exchanger and are controlled from Control Room MC-11. The operator must hold the open pushbutton until the valve fully opens because there is no seal-in associated with the open circuit. They are normally closed and open on a S_s signal.

2.6.7 ND Heat Exchanger Cooling Water Control Valves (KC-57 & 82).

These valves are located in the discharge lines of the ND Heat Exchangers. It is normally controlled by flow instrumentation to maintain KC flow through the heat exchanger at ≈5000 gpm. They fail open on a S_s signal. To regain automatic control, the S_s and the "Modulating Valves Reset" must be reset. The purpose of the "Modulating Valves Reset" is to ensure two actions are taken prior to removing a component from its safety alignment. These valves fail in open position.

Objective #10

2.6.8 KC Surge Tank Vent Valve (KC-122)

Located in the surge tank vent line and vents the tank to atmosphere. It is controlled from a local station at the surge tank by a two position, OPEN/CLOSE, pushbutton. It is normally open and receives a close signal on EMF-46A & B alarm. The "OPEN" position latches in so when the EMF signal clears, the valve will re-open.

2.6.9 KC Surge Tank Pressure Relief (KC-972)

Designed to relieve maximum water flow as a result of a ruptured NCP Thermal Barrier Heat Exchanger. Relief setpoint is 15 psig and discharges to Liquid Waste Recycle System, via Floor Drain System

2.6.10 KC Surge Tank Vacuum Relief (KC-123).

Vacuum breaker protects the tank from collapsing in the event of a KC leak when the KC Surge Tank vent is closed.

2.6.11 Letdown Heat Exchanger Cooling Water Control Valve (KC-132).

These valves are physically located in the Letdown Heat Exchanger line and regulate component cooling flow to maintain Letdown temperature at 115 °F. Valve is designed to fail open. Operation of this valve can cause changes in the NV System Demineralizers' temperatures. A change in demineralizer temperature can affect the boron concentration out of the demeralizer. Decrease in temperature can cause a dilution of the NC System (cooler resin holds more boron). An increase in temperature will have the opposite effect. See OE item 5.2

From Lesson Plan OP-MC-WE-EMF page 33 (Rev 30)

2.1.11 Component Cooling Water Monitor

The Component Cooling Water System is monitored by the following channels:

* 1(2) EMF 46A - Unit 1(2) Component Cooling A
* 1(2) EMF 46B - Unit 1(2) Component Cooling B

Objective # 2

These channels monitor the component cooling water downstream of the component cooling water coolers. 1EMF-46A monitors heat exchanger 1A while 1EMF-46B monitors heat exchanger 1B. 2EMF-46A monitors heat exchanger 2A while 2EMF-46B monitors heat exchanger 2B.

A radiation indication would indicate a failure of any of various heat exchangers containing primary reactor coolant or the presence of NA-24 due to sodium activation from chemical compounds (Sodium Molybdate and Sodium Tetraborate) added to the system as a corrosion inhibitor.

Objective # 2, 3

Should a Trip 2 high radiation alarm be received on either 1EMF-46A or 1EMF-46B, the component cooling water surge tank vent 1KC122 is automatically closed to prevent release of volatile fission products. A high radiation alarm on 2EMF-46A or 2EMF-46B will automatically close 2KC122.

The purpose of Auto actions: KC122 shutting will not prevent a water release to the Aux. Building. should a primary to KC leak occur, but if the leak is small it will terminate an airborne release to the Aux. Bldg. which originates in the KC System.

These channels use a single range gamma liquid (NaI Scint.) detector.

2.1.12 Boron Recycle Evaporator Distillate Monitor

Objective # 2

0EMF-47 - Boron Recycle is used to monitor the Boron Recycle evaporator distillate downstream of the filter.

Objective # 2, 3

Normally, the distillate will be routed to the Reactor Makeup Water Storage Tanks. On a Trip 2 high radiation alarm, valve 1NB219 will divert this flow to the Boron Recycle Holdup Tank.

The purpose of Auto actions are to prevents contaminating RMWST should the NB evaporator fail to function as designed.

This channel uses a single range gamma liquid (NaI Scint.) detector.

Parent Question: MNS Bank PSSKCN03

Question 62 PSSKCN03

1 Pt Which one of the following describes the automatic operation of 1KC-122 (*KC Surge Tank Vent Valve*)?

A. 1EMF-46A (B) in Trip 1 alarm will cause the vent to close; when the alarm clears the valve will automatically re-open (the "OPEN" position seals in).

B. 1EMF-46A (B) in Trip 2 alarm will cause the vent to close; when the alarm clears the valve will automatically re-open (the "OPEN" position seals in).

C. 1EMF-46A (B) in Trip 1 alarm will cause the vent to close and the "CLOSE" positions seals in; the valve must be locally re-opened.

D. 1EMF-46A (B) in Trip 2 alarm will cause the vent to close and the "CLOSE" positions seals in; the valve must be locally re-opened.

Answer 62

Answer: B

SYS010 A1.07 - Pressurizer Pressure Control System (PZR PCS)
Ability to predict and/or monitor changes in parameters (to prevent exceeding design limits) associated with operating the PZR PCS controls including: (CFR: 41.5 / 45.5)
RCS pressure .....

Given the following conditions on Unit 1:

- Repairs have just been completed on the SLIM module for 1NC-29 (Pressurizer Spray Valve)
- The OATC has just completed throttling 1NC-29 with its controller in MANUAL to verify proper operation of the SLIM
- 1NC-29 controller is now in AUTO

After completion of testing the Pressurizer Pressure Master Controller soft controls indicate as follows:

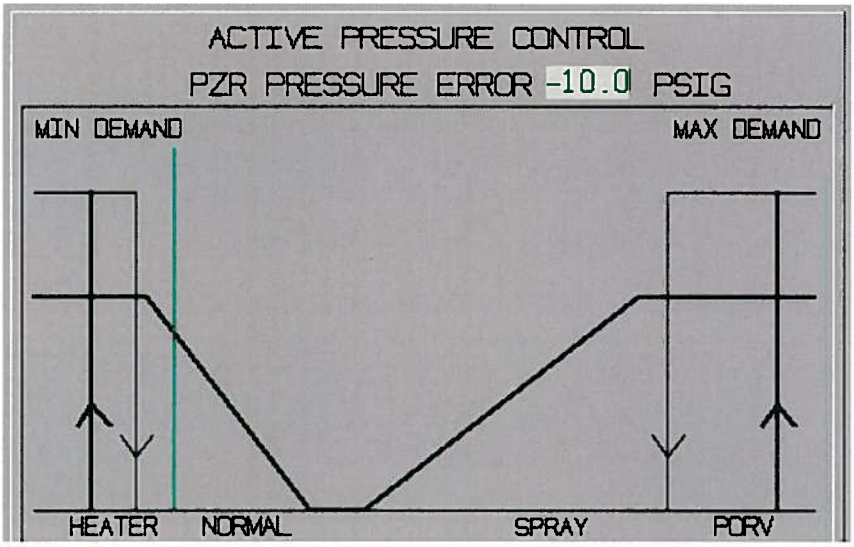

1. What is the current demand for the Bank 'C' heaters?

2. At what PRESSURE ERROR will the Backup heaters energize?

A. 1. 17%
   2. (–) 17 PSIG

B. 1. 17%
   2. (–) 25 PSIG

C. 1. 83%
   2. (–) 17 PSIG

D. 1. 83%
   2. (–) 25 PSIG

General Discussion

'C' Heater Group control is always in Automatic. The SCR power controller is controlled by the Pressure Master Controller. 'C' Heater power is ramped linearly from 0% to 100% as the Pressure Master Controller output goes from -15 psig (Error) to +15psig (Error), regardless of system pressure.

At a PZR Pressure Error of -10.0 PSIG, the Bank 'C' Demand can be calculated as follows:

50% Demand for the Heaters occurs at a Pressure Error of 0 PSIG. 100% Demand occurs at a Pressure Error of -15 PSIG. Therefore, there is a 50% increase in Demand over a -15 PSIG change in Pressure Error. Therefore:

50/-15 = x/-10 -15x = -500 x = 33.3 (change in demand from 50%)

Starting from an initial Demand of 50% the final Demand = 50% + 33.3% = 83.3%

The Backup heaters energize when if the pressure error signal is -25 PSIG and de-energize when the pressure error signal increases to -17 PSIG.

Answer A Discussion

INCORRECT: See explanation above.

PLAUSIBLE: Part 1 is plausible if the applicant calculates the Demand based on a +10 Pressure Error signal as 17% Demand would be correct.

Part 2 is plausible since this is the error signal at which the Backup heaters de-energize.

Answer B Discussion

INCORRECT: See explanation above.

PLAUSIBLE: Part 1 is plausible if the applicant calculates the Demand based on a +10 Pressure Error signal as 17% Demand would be correct.

Part 2 is correct.

Answer C Discussion

INCORRECT: See explanation above.

PLAUSIBLE: Part 1 is correct.

Part 2 is plausible because this is the error signal at which the Backup heaters de-energize.

Answer D Discussion

CORRECT: See explanation above.

Basis for meeting the KA

The KA is matched because the PZR PCS controls have been operated resulting in a change in NC system pressure. Based on the change in NC system pressure and the indications affected (ability to monitor) by that change (Pressurizer Pressure Error) the applicant must determine the status of the Pressurizer Heaters. Once the Operator determines what the demand for the Bank 'C' Heaters should be, they can compare that to the actual demand signal on the soft panel to determine if the PCS is operating as required.

Part of the MNS Design Basis Safety Analysis assumes that Pressurizer Pressure and Level are within normal operating limits at the beginning of a transient. For example, with regards to pressurizer pressure, part of the design basis of the Pressurizer (related to PZR pressure control) assumes that a Safety Injection does not occur on a Reactor Trip. If Pressurizer pressure is low out of the normal operating band when a Reactor Trip occurs it is possible that a Safety Injection could occur on low pressure and thus the Pressurizer would not have performed its design function with regards to maintain NC system pressure within design limits. Consequently, the ability to monitor proper operation of heaters and sprays to maintain pressure within normal limits is essential in assuring that the design limits of the system are not exceeded. Therefore, the "to prevent exceeding design limits" portion of the KA is also met by this question.

Basis for Hi Cog

This is an analysis level question because Part 1 of the question requires the applicant to calculate the 'C' Bank Heater Demand based on the Pressurizer Pressure Error signal. Part 2 of the question is memory.

Basis for SRO only

Job Level	Cognitive Level	QuestionType	Question Source
RO	Comprehension	NEW	

Development References	Student References Provided
Learning Objective: 1) PS-IPE-DCS #5 References: 1) Lesson Plan OP-MC-PS-IPE-DCS Section 2.4	

SYS010 A1.07 - Pressurizer Pressure Control System (PZR PCS)

Ability to predict and/or monitor changes in parameters (to prevent exceeding design limits) associated with operating the PZR PCS controls including: (CFR: 41.5 / 45.5)

RCS pressure .....

401-9 Comments:	Remarks/Status
	401-9 Comments: No comment. ---------- ---------- Resolution / Comments: N/A

Question 9 References:

From Lesson Plan OP-MC-PS-IPE-DCS Section 2.4:

2.4 "C" Heater Group

"C" Heater Group is made up of 7 heater banks. The heater banks have variable power control. The capacity of the "C" Heaters totals 484 KW. There are two power sources available for the "C" Heaters, LXF (normal) and LXC (Alt.). The breakers are Kirk Key interlocked so that only one can supply at a time. The supply breaker auto trips on Low PZR Level <17% and also if charging flow lowers to <10 gpm for >20 seconds, to prevent heater damage if uncovered (due to the poor heat conduction into non-liquid surroundings). When level recovers to >17% or 15 seconds after the heaters are de-energized due to low charging flow and PZR level is >17%, the supply breaker must be manually reclosed, using the MCB OPEN/CLOSED control switch for the supply breaker on MC10. With the supply breaker closed, the heaters might still not be energized, unless the SCR power controller is turned on by the pressure control system.

Objective #5

"C" Heater Group control is always in Automatic. The SCR power controller is controlled by the Pressure Master Controller. "C" Heater power is ramped linearly from 0% to 100% as the Pressure Master Controller output goes from -15 psig (Error) to +15psig (Error), regardless of system pressure. In the rare instance of starting from 0 psig (Error) output (2235 psig) steady state conditions (with no integral function built in), and having a rapid step decrease in pressure with no time for integral to build in, then when the controller got to -15 psig (Error), this would be equivalent to a system pressure of 2220 psig. The same would be true for a transient in the other direction for +15 psig (Error) and 2250 psig. There is only either 484 KW or 0 KW going to the "C" Heaters, with power being controlled by the percentage of time 484 KW is going to the heaters. With "C" Heaters 10% on, 10% of the time 484 KW is going to the heaters, and 90% of the time 0 KW is going to the heaters. There is a red indicating light on the MCB that lights during the time 484 KW is being sent to the heater. On the "NC-Pressurizer and PRT" DCS graphic, the "C" Group Heater amps will vary as the heater are energized and deenergized.

2.5 Backup Heaters

Refer to Drawing 7.8, Backup Heater Control. There are three Groups of backup heaters (A, B, & D). Groups A & B have 6 Banks each. Total worth for each Group is 416 KW. Group D has 7 Banks. Total worth is 484 KW. Groups A & B have safety related power supplies (ELXA & ELXB) and are required by Tech Specs. Group D has non-safety power supply (6 Banks from LXG, 1 Bank from SMXG at the SSF). All three Groups' supply breakers trip if PZR level <17% and also if charging flow lowers to <10 gpm for >20 seconds. When level recovers to >17% , the supply breakers can be manually reclosed. Likewise 15 seconds after the heaters are de-energized due to low charging flow and PZR level is >17% the supply breakers can be manually reclosed. Unlike the 'C' Group with its' supply breaker control on MCB 1MC10, the backup heaters have a different arrangement. The backup heater supply breaker controls are

on the back vertical MCB MC-5. On the front MCB MC-10, they have ON/OFF control that controls the "M" contacts in the supply breaker to actually energize/de-energize the heater Groups. Groups A & B trip on a Blackout or S_s. On a Blackout, they can be manually reclosed. On a S_s, the sequencer must be reset before they can be manually reclosed. The combined total capacity of all heaters is 1800 KW.

2.5.1 MCB Backup Heater Control

Objective #5

Each Backup Heater Group has an AUTO/MAN selector switch on the MCB. In AUTO, the heaters will energize on a "PZR High Level Deviation" (5% > programmed level) or a "PZR Low Press Deviation". The setpoint for Low Pressure Deviation are "Heaters ON" at -25 psig (Error) output on the Pressure Master Controller and "Heaters OFF" at -17 psig (Error) output. The reason for energizing heaters on a high level deviation is to warm the liquid temperature back to saturation on the assumed cold water insurge that caused the high level. In MAN, the heaters will energize via the MCB ON/OFF control switch, one for each backup heater. When in manual, the AUTO functions are disabled (still get the PZR Low Low Level, Blackout, and charging flow <10 gpm for > 20 seconds, & S_s trips, as appropriate).

There is indication of Backup Heater status and amperage supplied to each Heater Group on "NC - Pressurizer and PRT" DCS Graphic.

2.5.2 Local Heater Control

"A" & "B" Group Heaters can be locally controlled from the ASP. This is accomplished by going to LOCAL on the CR/LOCAL switches. In LOCAL, the MCB functions are disabled (Auto energize & MAN operation). "A" & "B" Group heaters would still trip on a Blackout or S_s, but not on PZR Low-Low level (17%). Bank 1 of D Group can be locally controlled at the SSF. This is accomplished by going to LOCAL on the REM/LOCAL switch. In LOCAL, the MCB functions are disabled (Auto energize & MAN operation). Bank 1 is energized via the ON/OFF switch at the SSF.

2.6 Pressurizer Spray Control

Flow to the spray nozzles (900 gpm maximum capacity) is controlled by the positioning of valves NC-27 & NC-29. Each spray valve has a SLIMs controller on the MCB. Refer to Drawing 7.4. The controller sends a 0 - 100% output through an I/P converter for the resulting 3 -15 psig pneumatic signal to control the air operated spray valve (3 psig - full closed, 15 psig - full open). When the MCB Spray controller is in MAN, the Operator can use the raise/lower pushbuttons to position the output to the desired value. When the MCB Spray Controller is in AUTO, the Pressure Master Controller controls the Spray Controller output.

Objective #5

The Spray Controller output is ramped linearly from 0% - 100% as the Pressure Master Controller output goes from +25 psig (Error) to +75 psig (Error). Positive feedback of spray valve position (OPEN, INTERMEDIATE, or CLOSED) is provided via illuminated windows on the PV bar graph on the spray controller (Soft Control and SLIMs). These lights are generated from signals received from the valve limit switches. When the full CLOSED limit switch is made up, the bottom window will be the only window that is lit.

When the valve comes off the full CLOSED limit switch the middle window will illuminate and now both the bottom and middle windows will be lit. When the Valve reaches the full open position and the full OPEN limit switch is made up the top window will illuminate. At this point all windows, bottom, middle, and top will all be lit.

2010 MNS SRO NRC Examination QUESTION 10

2510

C

SYS012 A2.02 - Reactor Protection System (RPS)

ability to (a) predict the impacts of the following malfunctions or operations on the RPS; and (b) based on those predictions, use procedures to correct, control, or mitigate the consequences of those malfunctions or operations: (CFR: 41.5 / 43.5 / 45.3 / 45.5)

Loss of instrument power .....

Given the following conditions and sequence of events on Unit 1:

- The unit is operating at 100% RTP
- The crew enters AP-016 (Malfunction of Nuclear Instrumentation) due to N-42 lower detector failing LOW
- IAE has placed the required bistables in the trip condition per AP-016
- A complete loss of 1EKVA occurs

Which ONE (1) of the following lists the required procedure flowpath for these conditions?

A. Continue in AP-016

B. Enter AP-003 (Load Rejection)

C. Enter E-0 (Reactor Trip or Safety Injection)

D. Enter AP-015 (Loss of Vital or Aux Control Power)

General Discussion

With N-42 failed, OTDT picks up. Also, since required bistables are tripped, all Reactor Protection bistables for that channel (Channel II) are tripped. Loss of a vital bus will cause that channels bistables (Channel I) to pick up. This results in a 2/4 logic on the protection bistables resulting in a runback and reactor trip.

Answer A Discussion

INCORRECT: See explanation above.

PLAUSIBLE: This answer is plausible since AP-016 will address the N42 failure but does not take priority.

Answer B Discussion

INCORRECT: See explanation above.

PLAUSIBLE: This answer is plausible since there are 2/4 OTDT and if a reactor trip did not occur, a runback would.

Answer C Discussion

CORRECT: See explanation above.

Answer D Discussion

INCORRECT: See explanation above.

PLAUSIBLE: This answer is plausible since AP-15 will address the 1EKVA failure but does not take priority.

Basis for meeting the KA

The KA is matched because the applicant must determine the effect of the loss of instrument power on the Reactor Protection System and determine the appropriate procedure based on that malfunction. The "predict" part of the KA is met in that the applicant must determine from analyzing the given conditions that the reactor has tripped which effects the procedure flowpath that must be taken.

Basis for Hi Cog

This is a higher cognitive level question because the applicant must associate multiple pieces of information to determine the correct answer. First, the applicant must recall that on a loss of 1EKVA, power is lost to Nuclear Instrument Channel I. The applicant is given that IAE has placed the required bistables for Power Range Channel II (N-42) in the tripped condition. The applicant must recall from memory that placing the required bistables in the tripped condition means all protection bistables for that channel and must also recall that loss of power to Nuclear Instrument Channel I will de-energize Control Power to N-41resulting in a trip of the protection bistables for that channel. The applicant must then recall the RPS protection logic for NIs to determine that a Runback and Reactor Trip should have occurred.

Basis for SRO only

Job Level	Cognitive Level	QuestionType	Question Source
RO	Comprehension	BANK	2008 NRC Q37 (Bank 543)

Development References

Lesson Plan OP-MC-IC-ENB Section 2.7

Student References Provided

SYS012 A2.02 - Reactor Protection System (RPS)

Ability to (a) predict the impacts of the following malfunctions or operations on the RPS; and (b) based on those predictions, use procedures to correct, control, or mitigate the consequences of those malfunctions or operations: (CFR: 41.5 / 43.5 / 45.3 / 45.5)

Loss of instrument power .....

401-9 Comments:

Remarks/Status

401-9 Comments:

Change "what" to "Which" in the WOOTF statement.
Please verify that "B" is in fact not a correct answer in and of itself. I suggest that "B" be replaced just to remove all doubt based on "B" distractor analysis.
This Q is a U based on possible 2 correct answers. FAC re-verify. If B is found to be acceptable, U will become an S.

QUESTION 10 2510 C

Resolution / Comments:

Answer "B" cannot be a correct answer. A reactor trip WILL occur for the conditions given and the correct procedure flowpath is to transition to E-0. Changed "what" to "which" in the stem per Lead Examiner's recommendation. See attached file for revised copy of question.

Question 10 References:

From Lesson Plan OP-MC-IC-ENB Section 2.7:

2.7 Power Supplies

NIS Channel I	EKVA
NIS Channel II	EKVB
NIS Channel III	EKVC
NIS Channel IV	EKVD
Wide Range Train A	EKVA
Wide Range Train B	EKVD

3.0 SYSTEM OPERATION

3.1 Normal Operation

3.1.1 Operating Procedures

The Excore Nuclear Instrumentation System provides the operator with neutron flux indication for all modes of operations. During each reactor startup, a healthy skepticism concerning the validity of power indications is warranted, particularly following a refueling outage. Changes in plant equipment or conditions, along with a strong desire to return the plant to full operation, may influence personnel to accept less than complete explanations for discrepant indications. For example, excessive electrical generation for the nuclear power indicated (a symptom of miscalibrated nuclear instruments) has been attributed to factors such as: cold circulating water temperature, expected efficiency improvements, and changes in core design or instrumentation.

KA	KA_desc
SYS012 A2.02	Ability to (a) predict the impacts of the following malfunctions or operations on the RPS; and (b) based on those predictions, use procedures to correct, control, or mitigate the consequences of those malfunctions or operations: (CFR: 41.5 / 43.5 / 45.3 / 45.5)□Loss of instrument power .....

Given the following conditions and sequence of events:

- Unit 1 was operating at 100% power.
- The crew has entered AP/1/A/5500/016 (Malfunction of Nuclear Instrumentation System) due to N-42 lower detector failing LOW
- IAE has not yet placed the required bistables in the trip condition per AP/1/A/5500/016.
- A complete loss of 1ERPD occurs

What procedure takes priority for these conditions?

A. Continue in AP/1/A/5500/016

B. Enter AP/1/A/5500/029 (Loss of Vital or Aux Control Power)

C. Enter AP/1/A/5500/003 (Load Rejection)

D. Enter EP/1/A/5000/E-0 (Reactor Trip or Safety Injection)

General Discussion

With N-42 failed, OTDT picks up. Loss of a vital bus will cause that channels bistables to pick up (in general) including OTDT. This causes a 2/4 situation on the OTDT runback and reactor trip. Ran on simulator at BOL and EOL and confirmed that lower detector only failing low would cause OTDT bistable to switch state.

Answer A Discussion

This procedure will address the N42 failure but does not take priority.

Answer B Discussion

This procdure will address ERPD failure but does not take priority.

Answer C Discussion

There are 2/4 OTDT and if a reactor trip did not occur, a runback would.

Answer D Discussion

CORRECT.

Basis for meeting the KA

Basis for Hi Cog

Basis for SRO only

Job Level	Cognitive Level	QuestionType	Question Source
RO	Comprehension	BANK	

Development References	Student References Provided
ENB lesson EPL lesson	

KA	KA_desc
SYS012 A2.02	Ability to (a) predict the impacts of the following malfunctions or operations on the RPS; and (b) based on those predictions, use procedures to correct, control, or mitigate the consequences of those malfunctions or operations: (CFR: 41.5 / 43.5 / 45.3 / 45.5)□Loss of instrument power .....

401-9 Comments:	Remarks/Status
012A2.02 Question appears to match K/A. NEW Will the OTDT bistables be in if just the lower detector on N-42 failed low? If not, and the bistables have not been placed in a tripped condition, the reactor may not trip, and C would be correct. Please explain. NEW	

B

2010 MNS SRO NRC Examination QUESTION 11

2511

SYS013 K2.01 - Engineered Safety Features Actuation System (ESFAS)
Knowledge of bus power supplies to the following: (CFR: 41.7)
ESFAS/safeguards equipment control .....

Given the following conditions on Unit 1:

- A Small-Break LOCA has occurred
- The crew has reached the step in E-1 (Loss of Reactor or Secondary Coolant) to reset SI and the Sequencers
- The crew is unable to reset the Sequencers

Which ONE (1) of the following describes the locations where Operators must be dispatched to de-energize BOTH Sequencers?

A. 1EVDA ; 1EVDB

B. 1EVDA ; 1EVDD

C. 1EVDB ; 1EVDC

D. 1EVDC ; 1EVDD

General Discussion

If one or both Sequencers can not be reset, E-1 Step 8 RNO directs operators to be dispatched to the 125VDC Vital Instrument and Control Panelboard to de-engerize the affected Sequencer. The Train 'A' sequencer is power from 1EVDA Breaker 6 and the Train 'B' Sequencer is power from 1EVDD Breaker 8.

Answer A Discussion

INCORRECT: See explanation above.

PLAUSIBLE: This answer is plausible because 1EVDA is correct and 1EVDB is another 125VDC Vital Instrument and Control Panelboard.

Answer B Discussion

CORRECT: See explanation above.

Answer C Discussion

INCORRECT: See explanation above.

PLAUSIBLE: This answer is plausible because 1EVDB and 1EVDC are both 125VDC Vital Instrument and Control Panelboards.

Answer D Discussion

INCORRECT: See explanation above.

PLAUSIBLE: This answer is plausible because 1EVDD is correct and 1EVDC is another 125VDC Vital Instrument and Control Panelboard.

Basis for meeting the KA

The KA is matched because the DG Load Sequencers control ESFAS/Safeguards equiment. The applicant must know the power supplies to the DG Load Sequencers to know where to dispatch NEOs to de-energize the sequencers.

Basis for Hi Cog

Basis for SRO only

Job Level	Cognitive Level	QuestionType	Question Source
RO	Memory	NEW	

Development References

Lesson Plan OP-MC-DG-EQB Section 2.4
EP/1/A/5500/E-1 (Loss or Reactor or Secondary Coolant)

Student References Provided

SYS013 K2.01 - Engineered Safety Features Actuation System (ESFAS)
Knowledge of bus power supplies to the following: (CFR: 41.7)
ESFAS/safeguards equipment control .....

401-9 Comments:

Remarks/Status

401-9 Comments:

No comment.

Resolution / Comments:

N/A

Question 11 References:

From Lesson Plan OP-MC-DG-EQB:

Event Recorder Inputs

Sequencer A actuated LOCA (ER179)	Sequencer B actuated LOCA (ER202)
1ETA loss of voltage Phase X, Y, or Z (3 points) (ER187, 188, 189)	1ETB loss of voltage Phase X, Y, or Z (3 points) (ER210, 211, 212)
Train A Load group 1-10 energized (11 points) (ER191, 192, 193, 194, 195, 196, 197, 198, 199, 200, 201)	Train B Load group 1-10 energized (11 points) (ER214, 215, 216, 217, 218, 219, 220, 221, 222, 223, 224)
Train A Accelerated sequence on (ER185)	1ETB load shed (ER213)
1ETA load shed (ER190)	Auto reset sequencer B (ER204)
Auto reset sequencer A (ER181)	Train B Blackout logic initiated (ER205)
Train A Blackout logic initiated (ER182)	Train B Blackout logic actuated (ER206)
Train A Blackout logic actuated (ER183)	Train B Accelerated sequence on (ER208)
Train A 8 sec. UV test complete (ER184)	Train B 8 sec. UV test complete (ER207)
Sequencer A reset actuated (ER180)	Sequencer B reset actuated (ER203)
D/G A start enabled (ER186)	D/G B start enabled (ER209)
D/G A Committed Time Sequence Commenced (ER425)	D/G B Committed Time Sequence Commenced (ER426)
ETA Degraded Voltage Phase X, Y, or Z (3 Points) (ER445, 446, 447)	ETB Degraded Voltage Phase X, Y, or Z (3 Points) (ER450, 451, 452)
ETA Degraded Voltage Alarm Timer (ER 448)	ETB Degraded Voltage Alarm Timer (ER 453)
ETA Degraded Voltage Trip (ER449)	ETB Degraded Voltage Trip (ER454)

Power Supplies

The Diesel Generator Load Sequencer System is powered from the 125 VDC Vital Instrumentation and Control System. (Train 1A - 1EVDA, Train 1B - 1EVDD).

Each sequencer cabinet has a space heater. These space heaters are powered from local non-safety lighting panelboards.

From E-1 (Loss of Reactor or Secondary Coolant):

ACTION/EXPECTED RESPONSE	RESPONSE NOT OBTAINED
8. (Continued)	
g. Reset the following:	
__ 1) S/I.	__ 1) Reset S/I **PER** EP/1/A/5000/G-1 (Generic Enclosures), Enclosure 23 (Local Reset of S/I Signal).
__ 2) Sequencers.	2) Dispatch operator to open affected sequencer control power breaker:
	__ • A Train - 1EVDA Breaker 6
	__ • B Train - 1EVDD Breaker 8.
__ 3) Containment spray.	
__ h. **IF AT ANY TIME** a B/O signal occurs, **THEN** restart S/I equipment previously on.	
__ i. Stop NS pumps.	
j. Close the following:	
__ • 1NS-29A (1A NS Hx Outlet Cont Outside Isol)	
__ • 1NS-32A (1A NS Hx Outlet Cont Outside Isol)	
__ • 1NS-15B (1B NS Hx Outlet Cont Outside Isol)	
__ • 1NS-12B (1B NS Hx Outlet Cont Outside Isol).	

SYS022 2.4.45 - Containment Cooling System (CCS)
SYS022 GENERIC
Ability to prioritize and interpret the significance of each annunciator or alarm. (CFR: 41.10 / 43.5 / 45.3 / 45.12)

Given the following conditions on Unit 1:

- The unit is operating at 100% RTP
- A small NC System leak occurs inside Containment
- Annunciator 1AD-9 / A8, (CONT .5 PSIG ALERT) is received

Which ONE (1) of the following is an expected response of the VL AHU's and the Containment Pipe Tunnel Booster Fans (PTBF's)?

A. All VL AHU(s) start and shift to HIGH speed
Both PTBF's start and shift to HIGH speed

B. All VL AHU(s) start and shift to HIGH speed
The PTBF's are running according to their switch positions

C. Operating VL AHU(s) shift to HIGH speed, Idle fans remain OFF
Both PTBF's start and shift to HIGH speed

D. Operating VL AHU(s) shift to HIGH speed, Idle fans remain OFF
The PTBF's are running according to their switch positions

General Discussion

At the initiation of the 0.5 psig lower Containment pressure signal, all four VL air handling units and both Pipe Tunnel Booster Fans will start and switch to "HI" speed. HVAC switch control is regained when pressure is less than 0.5 psig.

Answer A Discussion

CORRECT: See explanation above.

Answer B Discussion

INCORRECT: See explanation above.

PLAUSIBLE: The first part of this distracter is correct.

The second part concerning the PTBF's is plausible because this would be the correct response for an SI signal.

Answer C Discussion

INCORRECT: See explanation above.

PLAUSIBLE: The first part of this distracter is plausible because the VL AHU's do shift to high speed, and if the applicant confuses the response of other VUL components (VR, S/G Booster Fans and VR fans) which will only respond if they are selected to be running.

The second part concerning the PTBF's is correct.

Answer D Discussion

INCORRECT: See explanation above.

PLAUSIBLE: The first part of this distracter is plausible because the VL AHU's do shift to high speed, and if the applicant confuses the response of other VUL components (VR, S/G Booster Fans and VR fans) which will only respond if they are selected to be running.

The second part concerning the PTBF's is plausible or reasons stated above.

Basis for meeting the KA

This K/A is a generic applied to the containment cooling system. The question requires the applicant to possess the ability to interpret the significance of an annunciator associated with the CCS by indentifying what effect the alarm will have on the system. There are very few annunciators associated with the CCS system and the only time they would present an opportunity to "Prioritize" would be if containment pressure was approaching 1 psig setpoint which would result in an SI. Dealing with the SI would then become the priority and the 'system' part of the K/A would not be met.

Basis for Hi Cog

Basis for SRO only

Job Level	Cognitive Level	QuestionType	Question Source
RO	Memory	NEW	

Development References

Lesson Plan OP-MC-CNT-VUL Page 31 (Rev 28)

OP-MC-CNT-VUL Obj. 4

Student References Provided

SYS022 2.4.45 - Containment Cooling System (CCS)
SYS022 GENERIC
Ability to prioritize and interpret the significance of each annunciator or alarm. (CFR: 41.10 / 43.5 / 45.3 / 45.12)

401-9 Comments:

Remarks/Status

401-9 Comments:

No comment.

Resolution / Comments:

N/A

Question 12 References:

OP-MC-CNT-VUL Obj. 4

OBJECTIVES

	OBJECTIVE	NLO	NLOR	LPRO	LPSO	LOR
1.	State the purpose of the following Containment Ventilation Subsystems • Upper Containment Ventilation System. • Lower Containment Ventilation System. • Control Rod Drive Ventilation System. • Incore Instrumentation Room Ventilation System.	X	X	X	X	
2.	State the source of cooling water to the upper and lower containment ventilation units.	X	X	X	X	
3.	Discuss the operation of the Containment Ventilation Systems (VU,VL,VR,VT) including the components operating during normal unit operations.	X	X	X	X	
4.	State the automatic actions that occur to the Lower Containment Ventilation units if containment pressure increases to 0.5 psig.	X	X	X	X	X
5.	Discuss the automatic alignment of the Containment Ventilation Systems (VU, VL, VR, VT) following a: • Safety Injection signal. • Blackout signal.	X	X	X	X	X
6.	Concerning the "Reset/Retransfer" switches: • List the units having a "Reset/Retransfer" switch. • Discuss the purpose and operation of the switch.	X	X	X	X	X
7.	Describe the local controls and indications associated with the Containment Ventilation Systems.	X	X	X	X	X
8.	Describe the Control Room controls and indications associated with the Containment Ventilation Systems.			X	X	X

1.0 SYSTEM OPERATION

1.1. Normal Operation

VL System Operation

Objective #3

Typical configurations for operation of the VL ventilation units are listed as follows in order of increasing cooling capacity:

1. **Two to four units at low speed**
2. **Three units at high speed with one standby unit, and**
3. **Four units at high speed.**

The number of ventilation units needed to cool lower Containment depends upon the season of the year, the cooling water inlet temperature, and the Containment heat load. The lower containment heat load has decreased due to improvements in insulation techniques. Therefore, operation with only two VL AHUs in low speed is now possible. The most desirable configuration for operation of the ventilation units is low speed operation. This will minimize the wear and required maintenance on the units. Optimum VL AHU and RV Pump configuration is based on Lower Containment Weighted Average Temperature (LCWAT), the number of VL AHUs in operation and the speed the VL AHUs are operating in. In Modes 1 through 5 , RN is the preferred source of cooling water. RV pumps can supply cooling, but are not the preferred source. In Mode 6, or No Mode, cooling water is not required.

Objective #4

At the initiation of the 0.5 psig lower Containment pressure signal, all four VL air handling units and both Pipe Tunnel Booster Fans will start and switch to "HI" speed. HVAC switch control is regained when pressure is less than 0.5 psig.

The pressurizer booster fans have an electric interlock so that both fans can not be operated at the same time. One fan is operated during normal operation. One pipe tunnel booster fan is operated in "High" speed during normal operation. Each steam generator area booster fan operates during normal operation.

VR System Operation

Objective #3

Normal operation will consist of running a minimum of three (3) of the four (4) VR fans.

SYS022 K1.01 - Containment Cooling System (CCS)

nowledge of the physical connections and/or cause-effect relationships between the CCS and the following systems: (CFR: 41.2 to 41.9 / 45.7 / 45.8)

SWS/cooling system .....

Which ONE (1) of the following describes the operation of the RV System if Containment pressure reaches 2.8 PSIG?

A. The RV Containment isolation valves will Auto Close on the (S_T) signal. Containment cooling will be provided to the RN non-essential header.

B. The RV Containment isolation valves will Auto Close on the (S_S) signal. Containment cooling will be provided to the RN non-essential header.

C. The RV header is isolated from the RN header by the (S_T) signal. The RV pumps will Auto Start on RN non-essential header low pressure to supply the Containment AHU's.

D. The RV header is isolated from the RN header by the (S_S) signal. The RV pumps will Auto Start on RN non-essential header low pressure to supply the Containment AHU's.

General Discussion

In this question, a 1 psig pressure in containment would result in a Safety Injection. As a result of the SI a (SS) Safety Injection signal and a (ST) Phase A Isolation signal would be generated. The normal supply to Containment cooling is the RN non-essential header. This header is supplemented by flow from the RV (Containment Cooling) pumps via a tie into the RN piping from RV downstream of RN-42A. RN-42 closes on a (SS) signal resulting is isolation of RN to the Containment Ventilation portion of the RN Essential header which isolated RN from RV. This would result in lower pressure of this header and when the pressure reaches 50 psig any RV pump selected to Auto will start.

Answer A Discussion

INCORRECT: See explanation above.

PLAUSIBLE:

The first part is plausible if the applicant confuses the signal that closes the RV containment isolation valves. The RV containment isolation valves to get an ESF signal to close. However, they close on a Phase B (SP) signal instead of a Phase A signal.

Since RN is the normal supply for Containment cooling the second part is plausible as well.

Answer B Discussion

INCORRECT: See explanation above.

PLAUSIBLE: The first part is plausible if the applicant confuses the signal that closes the RV containment isolation valves. The RV containment isolation valves to get an ESF signal to close and many containment isolation valves do close on a Safety Injection signal. However, they close on a Phase B (SP) signal instead of a Safety Injection signal.

Since RN is the normal supply for Containment cooling the second part is plausible as well.

Answer C Discussion

INCORRECT: See explanation above.

PLAUSIBLE: The first part of this answer is plausible if the applicant confuses what signal isolates the RV header from the RN header. The RV header is isolated from the RN header on a Safety Injection and since the SI signal also generates a Phase A signal, it is plausible for the applicant to conclude that the Phase A signal cause the isolation instead of the Safety Injection signal.

The second part is correct.

Answer D Discussion

CORRECT: See explanation above.

Basis for meeting the KA

This K/A is met because the applicant is required to recall knowledge that involves an understanding of the physical connections between RV and RN. In the question a phase A has occurred which only effects RN but due to how the two systems are tied together, RV is ultimately effected and to correctly answer the question an understanding of the relationship is required. In this way, this question also meets the cause-effect angle of this K/A. RV is our containment cooling system.

Basis for Hi Cog

This is a hi cog question because it involves a level of analysis of given situation, apply system knowledge and solve a problem of what both would be the effect and how the system would respond to the conditions given in the stem.

Basis for SRO only

Job Level	Cognitive Level	QuestionType	Question Source
RO	Comprehension	BANK	MNS Bank Q CNTRV028

Development References	Student References Provided
Lesson Plan OP-MC-CNT-RV Pg. 27 OP-MC-CNT-RV Obj's 2,4 & 13	

SYS022 K1.01 - Containment Cooling System (CCS)

Knowledge of the physical connections and/or cause-effect relationships between the CCS and the following systems: (CFR: 41.2 to 41.9 / 45.7 to 45.8)

SWS/cooling system .....

.01-9 Comments:

Remarks/Status
401-9 Comments: I believe that it is common knowledge that Containment isolation occurs on a phase B isolation. I believe that distractors A and B are NP. Consider replacing or modifying or putting something in the stem to give them false credibility. This Q is U due to potentially 2 NP distractors, ---------- Resolution / Comments: In this particular case, it is true that the RV Containment isolation valves close on a Phase B isolation. However, the majority of all Containment Isolation valves close on a Phase A signal. Therefore, it is plausible for the applicant to conclude that the RV Containment isolation valves would close on a Phase A signal (ST) or on a Safety Injection (SS) signal which causes a Phase A signal.

Question 13 References:

OBJECTIVES

SEQ	OBJECTIVE	NLO	NLOR	LPRO	LPSO	LOR
1	State the purpose of the Containment Ventilation Cooling Water System.	X				
2	Describe the flowpath of water from the RV pump suction to the RN header discharge.	X				
3	Describe the RV pump strainer design.	X				
4	List the signals that will AUTO-START a RV pump.	X	X			
5	Describe how the RV pumps are protected during low flow conditions.	X	X			
6	List the loads supplied by the RV header.	X				
7	List the safety related components associated with the RV system.	X	X			
8	List the signal that will Auto-Close RN-301AC and RN-302B (RV pump suction supply header isolation valves).	X	X			
9	Describe the RV pump instrumentation and controls.	X				
10	Describe the normal operation of the RV System, including Manual operation of the RV pumps.	X	X			
11	Describe the sequence to swap and clean the RV pump suction strainer if RV pumps are operating.	X	X			
12	Given a Limit and/or Precaution associated with an operating procedure, discuss its basis and applicability.	X	X			
13	Explain the status of the RV pumps during normal and abnormal operation.	X				

From Lesson Plan OP-MC-CNT-RV Pg 27 (Rev 19)

3.2 Abnormal and Emergency Operation

Objective # 13

The RV System is not required during emergency operations or for the safe shutdown of the plant.

It may be desirable, though not required, for the RN System to support the Auxiliary and Reactor Building AHUs for some emergency operating scenarios. For a Loss of Offsite Power (LOOP) Event, the RN System can provide cooling water to the RV loads as RN receives emergency power from the emergency diesel generators. Isolation valve RN42A remains open to allow RN Train A water to supply RV loads since the RV pumps may be inoperable upon a loss of offsite power.

Upon a Containment High-High Pressure Signal (SP), the RV Containment Isolation Valves will close, thus isolating the Upper Containment, Lower Containment, and Incore Instrumentation Room AHUs from the RV System. The RV pumps are also isolated from the Low Level Intake when the RN valves respond to the SP signal. The RV System has no change of alignment or operation on a Containment High Pressure Signal (SS). However, the RN System does have significant alignment and operation responses to the SS Signal that could affect RV. RN-42 closes on an SS signal, leaving RV to supply VL, VU, and VT. Other RN responses could also lower the pressure in its non-essential header, thus activating any RV pump aligned in the AUTO mode. For this reason, all three RV pumps should not be aligned in the MANUAL mode at the same time unless at least one pump is running.

Parent Question MNS Bank

Question 27 CNTRV028
1 Pt Which ONE of the following describes the operation of the RV system upon receipt of a Containment High Pressure (S_S) signal?

A. The RV Containment isolation valves will close as well as the Low Level Intake suction isolation valves.

B. The RV pump in auto is started on the S_S signal to supply the header. The RV header is isolated from the RN header by the SS signal.

C. The RV pump in auto is started on the S_S signal. The combined flow of the RV and RN system operate together to supply a higher flow rate to the Containment AHUs.

D. The RV system is isolated from the RN system on the S_S signal and the RV pump in auto will start on low pressure.

Answer 27

D

SYS059 A2.06 - Main Feedwater (MFW) System

Ability to (a) predict the impacts of the following malfunctions or operations on the MFW; and (b) based on those predictions, use procedures to correct, control, or mitigate the consequences of those malfunctions or operations: (CFR: 41.5 / 43.5 / 45.3 / 45.13)

Loss of steam flow to MFW system .....

Given the following conditions on Unit 1:

- The unit is increasing power after a forced shutdown
- OP/1/A/6100/003 (Controlling Procedure for Unit Operation) is in effect
- 1A CF pump is in service
- When 40% RTP is reached, the crew closes 1HM-95 (AS to A&B CF Pumps)
- When 1HM-95 closes, the crew observes the 1A CF pump speed and D/P decreasing and FRV's opening

1. What is the cause of the indications described above?

2. What action is required to continue the power increase?

A.
1. 1SP-1 (SM to CF Pump 1A) is closed.
2. Dispatch an operator to open 1SP-1. Main Steam is the primary supply to the CF pumps between 20% and 80% RTP.

B.
1. 1SP-1 (SM to CF Pump 1A) is closed.
2. Dispatch an operator to open 1SP-1. Main Steam is the primary supply to the CF pumps between 20% and 100% RTP.

C.
1. MSR cross over steam pressure is inadequate.
2. 1HM-95 must be reopened. MSR crossover steam is the primary supply to the CF pumps between 40% and 80% RTP.

D.
1. MSR cross over steam pressure is inadequate.
2. 1HM-95 must be reopened. MSR crossover steam is the primary supply to the CF pumps between 40% and 100% RTP.

General Discussion

During a unit start up, SP-1(2) are opened at approximately 15% RTP. This is done to align the HP steam supply to the CF pumps. When the unit reaches 40% RTP the procedure directs the crew to close 1HM-95 which isolates the Aux Steam header from the CF pumps. At this point the LP steam supply is provided by MSR crossover steam which, at 40%, is at too low a pressure to provide much flow. The majority of steam is supplied by HP steam via SP-1(2). The low pressure governor valve opens first and is supplied by the Auxiliary Steam System until the Moisture Separators Reheater (MSR) steam has sufficient capacity to supply which occurs above 80% power. The high-pressure governor is supplied by the Main Steam System and is used when the low-pressure governor is not able to meet the demand. High-pressure steam will be supplied automatically if low-pressure stream cannot maintain turbine speed. At 100% RTP the FWPT steam supply is from MSR exhaust only with the HP governor valves completely closed. With the given power level, closure of 1SP-1 would have no effect on FWPT operation. Aux Steam is normally isolated at 100% power but is the primary steam supply at low power levels

Answer A Discussion

CORRECT: See explanation above.

Answer B Discussion

INCORRECT: See explanation above.

PLAUSIBLE: Part (1) is correct and therefore plausible

Part (2) is plausible because the action described is correct and HP steam is aligned to the CF pump all the way to 100%. Since Main Steam pressure is higher than MSR crossover pressure it would be reasonable for the applicant to pick this as the primary supply.

Answer C Discussion

INCORRECT: See explanation above.

PLAUSIBLE: Part (1) is plausible because procedurally, 1HM-95 is closed at 40% RTP which isolates the Aux Steam Supply. This connection ties in to the Feed pump in parallel with the MSR crossover supply. It would be reasonable for the applicant to misinterpret this alignment to mean that the AS supply is being replaced with the crossover steam supply and the replacement source should be at a high enough pressure to supply the pumps.

Part (2) is plausible because reopening 1HM-95 would restore proper steam pressure to the feed pumps. However, the combination of Aux Steam and MSR crossover steam will not be sufficient to allow the power increase to continue. SP-1 must be opened or as power is increased the CF pump speed and D/P will again decrease due to insufficient steam supply. The range given for the MSR supply is consistant with where the isolation of AS is taking place. Since Main Steam pressure is higher than MSR crossover pressure it would be reasonable for the applicant to pick this as the primary supply above 80%

Answer D Discussion

INCORRECT: See explanation above.

PLAUSIBLE: Part (1) is plausible because procedurally, 1HM-95 is closed at 40% RTP which isolates the Aux Steam Supply. This connection ties in to the Feed pump in parallel with the MSR crossover supply. It would be reasonable for the applicant to misinterpret this alignment to mean that the AS supply is being replaced with the crossover steam supply and the replacement source should be at a high enough pressure to supply the pumps.

Part (2) is plausible because reopening 1HM-95 would restore proper steam pressure to the feed pumps. However, the combination of Aux Steam and MSR crossover steam will not be sufficient to allow the power increase to continue. SP-1 must be opened or as power is increased the CF pump speed and D/P will again decrease due to insufficient steam supply.

MSR crossover pressure is the primary supply to the CF pumps between 80% and 100% it would be reasonable for the applicant to pick 40% because this is consistent with where the isolation of AS is taking place.

Basis for meeting the KA

The K/A is matched because the applicant is presented with a scenario where adequate steam flow to the operating CF has been lost. (Loss of steam flow to the MFW system) He is then presented with a series of plausible failures and asked to predict if a given condition would result in the condition described in the stem of the question along with what would be required to mitigate the consequences of the stated condition. (A2 K/A is addessed)

Basis for Hi Cog

This is a hi cog question because it involves a level of analysis of given situation, applying system and operational knowledge to predict an outcome.

Basis for SRO only

2010 MNS SRO NRC Examination QUESTION 14

2514 **A**

Job Level	Cognitive Level	QuestionType	Question Source
RO	Comprehension	NEW	

Development References
Lesson Plan OP-MC-MT-MSR pages 12 and 13: Plan OP-MC-CF-CF page 17: OP-MC-MT-MSR Obj. 2

Student References Provided

SYS059 A2.06 - Main Feedwater (MFW) System

Ability to (a) predict the impacts of the following malfunctions or operations on the MFW; and (b) based on those predictions, use procedures to correct, control, or mitigate the consequences of those malfunctions or operations: (CFR: 41.5 / 43.5 / 45.3 / 45.13)

Loss of steam flow to MFW system .....

401-9 Comments:

Remarks/Status
401-9 Comments: No comment. ---------- ---------- Resolution / Comments: N/A

Question 14 References:

OP-MC-MT-MSR Obj. 2

2	Describe the flowpaths for the Moisture Separator Reheaters including the following: • MSR shell side. • First Stage Reheater (Low Pressure) and Drain System. • Second Stage Reheater (High Pressure) and Drain System. • FWPT A and B.	X	X	X	X	

From Lesson Plan OP-MC-MT-MSR pages 12 and 13:

1.0 INTRODUCTION

1.1 Purpose

Objective # 1

The Moisture Separator Reheater (MSR) System is designed to take the high pressure turbine exhaust, remove the entrained moisture, provide heating through the first and second stage reheaters and supply moisture free, superheated steam to the low pressure turbines to improve efficiency and reduce maintenance on the low pressure turbine blading by reducing the low pressure turbine exhaust moisture.

The MSR shell and the first and second stage reheater tube bundle drains are then returned to the condensate cycle, which improves cycle efficiency.

1.2 General Description

At full power, exhaust steam exits the high pressure turbine at about 176 psia and 14% moisture content and flows to the Moisture Separator Reheaters (MSR's). The steam is first passed through a moisture (chevron) separator where approximately 10 percent of the flow is extracted as moisture and drained to a drain tank. The remaining 90 percent flows up through a two-stage steam-heated reheater where steam quality is increased and temperature is raised to approximately 150°F superheat. From high pressure turbine exhaust to low pressure turbine inlet, there is a pressure loss of approximately 8 to 9 psi at full power.

Objective # 2

A steam supply is provided for operation of the Turbine Driven Main Feedwater Pumps from the reheated steam prior to entering the low pressure turbines. Once turbine load is approximately 80%, the steam exiting "A1" and "B1" MSR's is the source of steam for the main feedwater pump turbines through the LP stop/governor valves.

2.0 COMPONENT DESCRIPTION

Objective # 6

In order to prevent turbine overspeed as a result of backflow or flashback, the first stage steam supply from "A" heater bleed, the MSR drain tank inlets and outlets and the first and second stage drain tank outlets are equipped with **piston operated check valves**. There are different types of these valves used in the MSR system.

One type, when supplied with air (open demand) a piston moves to compress the spring and fully open the valve. The valve is held in the open position. If flow were to reverse, the valve would close against actuator air pressure.

From Lesson Plan OP-MC-CF-CF page 17:

1.0 INTRODUCTION

1.1 Purpose

Objective # 1

The purpose of the Main Feedwater system is to take treated Condensate (CM) System water, heat it further to improve the plant's thermal efficiency, and deliver it at the required flow rate, pressure and temperature to the steam generators. The CF System is designed to maintain proper S/G water levels with respect to reactor power output and turbine steam requirements

The CF System provides feedwater isolation (FWI) to containment if a FWI signal is generated.

1.2 General Description

Objective # 2

Student will be required to draw a simplified system diagram as shown on Drawing 7.1. The Feedwater System begins at the Main Feedwater (CF) Pump suction header. The CF pumps discharge to the High Pressure Heaters (A1, A2, A3 and B1, B2, B3) where reclaimed steam from the Moisture Separator Heaters and High Pressure Turbine extraction steam is used to increase feedwater temperature from 360°F to 440°F. The flow continues from the HP heaters through the feedwater control valves, containment isolation valves to the steam generators. The steam generators are used to produce steam for use in the main turbine and other auxiliary loads.

2.0 COMPONENT DESCRIPTION

2.1 Main Feedwater Pumps

Objective # 3

There are two 50% capacity feedwater pumps driven by two 50% capacity variable speed turbines (refer to Drawing 7.2). **The main feed pumps increase system pressure from approx. 400 psig at its suction to approx. 1200 psig at its discharge at 100% power.** High and low-pressure governor valves control the turbine speed. The low pressure governor valve opens first and is supplied by the Auxiliary Steam System until the Moisture Separators Reheater (MSR) steam has sufficient capacity to supply which occurs above 80% power. The high-pressure governor is supplied by the Main Steam System and is used when the low-pressure governor is not able to meet the demand. High-pressure steam will be supplied automatically if low-pressure stream can not maintain turbine speed. A check valve is provided in the low-pressure supply to

prevent reverse flow from the high-pressure turbine. For more information on the Main Feedwater Pump Speed control, refer to lesson plan OP-MC-CF-IWE.

SYS025 K6.01 - Ice Condenser System

nowledge of the effect of a loss or malfunction of the following will have on the ice condenser system: (CFR: 41.7 / 45.7)

Upper and lower doors of the ice condenser .....

Given the following conditions on Unit 1:

- The unit is in MODE 1 at 10% RTP
- 1AD-9 / A5 (ICE COND LOWER INLET DOORS OPEN) alarm is LIT
- The lower inlet door position display panel indicates that a door is open
- The door is confirmed to be cracked opened. The door will not move further open and cannot be closed
- No other alarms related to the ice condenser, NF system or AHUs are lit

Which of the following is REQUIRED to be entered based on the current plant conditions?

1. Tech Spec 3.6.13 Ice Condenser Doors
2. Tech Spec 3.6.12 Ice Bed
3. Selected Licensee Commitment 16.6-3 Ice Condenser Door Position Monitoring System

A. 1 ONLY

B. 1 and 2 ONLY

C. 1 and 3 ONLY

D. 1, 2, and 3

General Discussion

Per TS 3.6.13 (Ice Condenser Doors) The ice condenser inlet doors, intermediate deck doors, and top deck doors shall be OPERABLE and closed while in MODES 1, 2, 3, and 4.

Answer A Discussion

CORRECT: See explanation above.

Answer B Discussion

INCORRECT: See explanation above.

PLAUSIBLE: The first part is correct.

For the second part (2), it is plausible to believe that the operability of the Ice Condenser Bed may be effected by the door being open. However, the applicant is given information in the stem of the question to indicate that Ice Condenser Bed operability has not been affected.

Answer C Discussion

INCORRECT: See explanation above.

PLAUSIBLE: First part (1) is correct.

For the second part (3), it is plausible if the applicant confuses the Door Monitoring System with the Ice Condenser Door itself. However, the door monitoring system is providing indication as required.

Answer D Discussion

INCORRECT: See explanation above.

PLAUSIBLE: First part (1) is correct.

For the second part (2), it is plausible to believe that the operability of the Ice Condenser Bed may be effected by the door being open. However, the applicant is given information in the stem of the question to indicate that Ice Condenser Bed operability has not been affected.

The third part (3) is plausible if the applicant confuses the SLC for the door monitoring system with the spec for the doors (Part 1). If so, it is plausible to believe that the SLC is applicable in addition to the TS for the doors.

Basis for meeting the KA

The applicant is given a condition where an Ice Condenser Door is opened and is asked to determine the effect that this malfunction will have on the Ice Condenser system (i.e. the applicability of Tech Specs and the SLC).

Basis for Hi Cog

This is a higher cognitive level question because it requires more than one mental step. First, the applicant must analyze the conditions given to determine the condition of the ice condenser system. The applicant must then compare that analysis to the Tech Specs / Licensing Commitment listed and determine which of them apply based on the condition of the ice condenser system.

Basis for SRO only

Job Level	Cognitive Level	QuestionType	Question Source
RO	Comprehension	BANK	2006 NRC Q42 (Bank 648)

Development References

References:
TS 3.6.13 and bases
TS 3.6.12
SLC 16.6.3
2. OP-MC-CNT-NF Section 2.1.3

Student References Provided

SYS025 K6.01 - Ice Condenser System

Knowledge of the effect of a loss or malfunction of the following will have on the ice condenser system: (CFR: 41.7 / 45.7)

Upper and lower doors of the ice condenser .....

401-9 Comments:

Remarks/Status

401-9 Comments:

No comment.

Resolution / Comments:

N/A

Question 15 References:

From Lesson Plan OP-MC-CNT-NF Section 2.1.3:

Objective #3

2.1.3 Ice Condenser Doors **(refer to Drawing 7.1)**

The purpose of the lower ice condenser doors during normal plant operation is to:

- **Provide a flow barrier from lower containment to the ice condenser lower plenum.**
- **Provide thermal insulation around the lower crane wall.**

During accident conditions, its purpose is to provide a path into the ice condenser from lower containment on a pressure increase due to a LOCA.

There are 24 pairs of inlet doors which have a total flow area of 1000 ft^2. The doors require a force of 1 lb/ft^2 to fully open **(refer to Drawing 7.3)**. The doors will open slightly if the cold air head is removed from the ice condenser. Shock assemblies are provided to dissipate the energy of rapid door opening for large break accidents.

Objective #2

Each of the lower ice condenser inlet doors have sensors which will generate the alarm " Ice Condenser Lower Inlet Doors Open" on 1(2)AD-9 in the control room.

- **"ICE COND LOWER INLET DOORS OPEN"**

Setpoint:	**Door (any of 24) NOT fully closed.**	
Origin:	**Limit switches monitoring the lower inlet doors.**	
	(MC1NPLL-6000, through 1NFLL6910)	
Probable Cause:	**1.**	**Improper operation of the Containment Air Return Fans.**
	2.	**Malfunction of Containment Pressure Control System.**
	3.	**LOCA**
	4.	**Steam Line or Feedwater line break.**
Automatic Action:	**None**	
Immediate Action:	**1.**	**Check proper operation of the Containment Air Return Fans AND VQ System.**
	2.	**IF alarm was NOT caused by a high energy line break, send operator to close affected door(s).**
	3.	**Refer to Tech Specs.**
	4.	**IF malfunction of CPCS, notify WCC SRO.**
	5.	**Notify Engineering to evaluate potential water intrusion into the ice condenser floor. (PIP 2-M97-2686)**

From TS 3.6.13:

3.6 CONTAINMENT SYSTEMS

3.6.13 Ice Condenser Doors

LCO 3.6.13 The ice condenser inlet doors, intermediate deck doors, and top deck doors shall be OPERABLE and closed.

APPLICABILITY: MODES 1, 2, 3, and 4.

ACTIONS

----------NOTE----------
Separate Condition entry is allowed for each ice condenser door.

CONDITION	REQUIRED ACTION	COMPLETION TIME
A. One or more ice condenser doors inoperable due to being physically restrained from opening.	A.1 Restore door to OPERABLE status.	1 hour
B. One or more ice condenser doors inoperable for reasons other than Condition A or not closed.	B.1 Verify maximum ice bed temperature is ≤ 27°F. AND B.2 Restore ice condenser door to OPERABLE status and closed positions.	Once per 4 hours 14 days

(continued)

N/A - N/A
Never Assigned to a K/A

Given the following:

- Unit 1 is in Mode 1 at 10% power.
- ICE COND LOWER INLET DOORS OPEN alarm is lit.
- The lower inlet door position display panel indicates that a door is open.
- The door is confirmed to be cracked opened. The door will not move further open and cannot be closed.
- No other alarms related to the ice condenser, NF system or AHUs are lit.

Which one describes the Tech Spec and/or SLC that must be entered for the current plant conditions?

A. Enter Tech Spec 3.6.13 Ice Condenser Doors

B. Enter SLC 16.6-3 Ice Condenser Door Position Monitoring System

C. Enter Tech Spec 3.6.13 Ice Condenser Doors, and
Enter SLC 16.6-3 Ice Condenser Door Position Monitoring System

D. Enter Tech Spec 3.6.12 Ice Bed, and
Enter Tech Spec 3.6.13 Ice Condenser Doors

General Discussion

Per TS 3.6.13 (Ice Condenser Doors) The ice condenser inlet doors, intermediate deck doors, and top deck doors shall be OPERABLE and closed while in MODES 1, 2, 3, and 4.

Answer A Discussion

Answer B Discussion

The door monitoring system is providing indication as required.

Answer C Discussion

The door monitoring system is providing indication as required

Answer D Discussion

Per information provided in the stem, the ice bed temperature is unaffected by the malfunction.

Basis for meeting the KA

Basis for Hi Cog

Basis for SRO only

Job Level	Cognitive Level	QuestionType	Question Source
RO	Memory	BANK	

Development References

References:
1. TS 3.6.13 and bases
2. OP-CN-CNT-NF11

Student References Provided

N/A - N/A
Never Assigned to a K/A

401-9 Comments:

Remarks/Status

SYS026 A2.09 - Containment Spray System (CSS)

bility to (a) predict the impacts of the following malfunctions or operations on the CSS; and (b) based on those predictions, use procedures to orrect, control, or mitigate the consequences of those malfunctions or operations: (CFR: 41.5 / 43.5 / 45.3 / 45.13)

Radiation hazard potential of BWST .....

Given the following conditions on Unit 1:

- The unit is in MODE 4 with A Train ND in service
- A CRUD Burst has been initiated and clean up is in progress
- Unknown to the Operators, 1ND-35 (ND Sys to FWST Isol) has developed a small leak past its seat (0.5 GPM)

1. Which of the following describes the operational concern associated with this condition?

2. In accordance with OP/1/A/6200/014 (Refueling Water System) what alignment would be required to address the radiological effects of this event?

A.
1. Increased radiation levels at the FWST enclosure.
2. The FWST would be placed in purification with the FW pump for clean up.

B.
1. Increased radiation levels at the FWST enclosure.
2. The FWST suction piping would be placed in recirculation using the FW Recirc pumps to dilute the crud deposited in the ECCS suction piping.

C.
1. The formation of hot spots in the ECCS suction piping downstream of 1FW-27 (FWST to ND Pump Isol).
2. The FWST would be placed in purification with the FW pump for clean up.

D.
1. The formation of hot spots in the ECCS suction piping downstream of 1FW-27 (FWST to ND Pump Isol).
2. The FWST would be placed in recirculation using the FW Recirc pumps to dilute the crud deposited in the ECCS suction piping.

General Discussion

In the situation given, the ND system would be highly contaminated due to being aligned for RHR during a crud burst clean up. Leakage past 1ND-35 would result in the highly contaminated ND system water entering the FWST. This would result in increased radiation levels at the FWST tank inside the FWST enclosure located outside the RCA in yard west of the Unit 1 containment building. To address this issue the U-1 FWST pump would be placed in purification using the U-1 FW pump and KF demineralizers.

Answer A Discussion

CORRECT: See explanation above.

Answer B Discussion

INCORRECT: See explanation above.

PLAUSIBLE: Answer 1 is correct.

Answer 2 is plausible because the line to the FWST from ND ties in to the ECCS suction piping upstream of 1FW-27 (Normally Open) and it would be conceivable for the applicant to conclude that contamination of the ECCS suction piping would be the operational concern. However this would be incorrect because in an RHR alignment, 1FW-27 is closed and there is no flowpath to the ECCS suction piping. If this was actually a concern, the FW Recirc pumps are designed to recirc the water in this piping and therefore this would be a resonable answer.

Answer C Discussion

INCORRECT: See explanation above.

PLAUSIBLE: Answer 1 is plausible because the line to the FWST from ND ties in to the ECCS suction piping upstream of 1FW-27 (Normally Open) and it would be conceivable for the applicant to conclude that contamination of the ECCS suction piping would be the operational concern. However this would be incorrect because in an RHR alignment, 1FW-27 is closed and there is no flowpath to the ECCS suction piping.

Answer 2 is correct.

Answer D Discussion

INCORRECT: See explanation above.

PLAUSIBLE: Answer 1 is plausible because the line to the FWST from ND ties in to the ECCS suction piping upstream of 1FW-27 (Normally Open) and it would be conceivable for the applicant to conclude that contamination of the ECCS suction piping would be the operational concern. However this would be incorrect because in an RHR alignment, 1FW-27 is closed and there is no flowpath to the ECCS suction.

Answer 2 is plausible is plausible because if answer 1 were correct the FW Recirc pumps are designed to recirc the water in this piping and therefore this would be a reasonable answer.

Basis for meeting the KA

This K/A is matched because both the FWST and ND (Aux Spray) are integral components of the CSS. The NS system takes suction from the FWST and sprays the water directly to the containment building so it is physically impossible for NS to pose a radiation hazard to the FWST unless it had been aligned for sump recirculation. It this case, the FWST would have been depleted and the need to align it for clean up would not exist. In order to have any plausible scenario where the CSS could pose a radiation hazard to the FWST, the ND system must be the system providing the source for the increased radiation.

The scenario described requires the applicant to evaluate a malfunction (Leakage past a normally closed isolation valve) and predict the operational impact. He must then pick the correct strategy to mitigate the consequences of the malfunction.

Basis for Hi Cog

This is a hi cog question because it involves a level of analysis of the given situation, application of system knowledge and solving a problem related to the effects and how to mitigate those effects.

Basis for SRO only

Job Level	Cognitive Level	QuestionType	Question Source
RO	Comprehension	NEW	

velopment References

Lesson Plan OP-MC-FH-FW Pg 17 (Rev 41)

Student References Provided

SYS026 A2.09 - Containment Spray System (CSS)

ility to (a) predict the impacts of the following malfunctions or operations on the CSS; and (b) based on those predictions, use procedures to rrect, control, or mitigate the consequences of those malfunctions or operations: (CFR: 41.5 / 43.5 / 45.3 / 45.13)

Radiation hazard potential of BWST .....

401-9 Comments:

Remarks/Status
401-9 Comments: A procedure of reference needs to be in affect to satisfy Part 2 of the KA Suggestion: Add a procedure to part two of the stem: "What alignment per procedure XXXX would be required... " ---------- ---------- Resolution / Comments: Added procedure reference to question 2 of the stem. See attached file for proposed revision to question.

Question 16 References:

From OP-MC-FH-FW Pg 17 (Rev 41)

1.0 INTRODUCTION

1.1 Purpose

Objective 1

The purpose of the Refueling Water System is to provide a source of borated water to be used during refueling, LOCA or as makeup for the Spent Fuel Pool.

The system can remove impurities from the refueling cavity and transfer canal during refueling.

The system can clean up the FWST.

The system also provides a means of transferring the refueling water between the refueling cavity and the FWST.

1.2 General Description

The system consists of:

- The FWST.
- The FW Pump.
- The FW Recirculation pumps.
- Four 30 kilowatt heaters connected into three 40 kilowatt heater groups.

The borated water is used during refueling to flood the refueling cavity. There is sufficient static head to partially fill the refueling cavity. The FW pump completes the fill and drain process. Water can be passed through the KF demineralizers for clean up during filling and draining.

The FWST Recirculation Pumps

The Recirculation pumps are used to maintain a 70°F temperature in the suction header. This header supplies suction to the NV, ND, NI, and NS pumps. The suction header volume is recirculated every 2.5 hours.

From OP-MC-FH-FW Pg 17 (Rev 41)

When raising or lowering level in the refueling canal, there is a potential for an airborne contamination event to occur. To prevent this from occurring during filling operations, we normally place VP in service and maintain a fill rate low enough to preclude airborne problems. To preclude this problem from occurring during drain down operations, we wash down the cavity walls while draining. Since demin water is used to wash down the walls, there is a potential for a dilution of either the NCS and/or the FWST to occur. To control that problem, we use the enclosure in the FW procedure to calculate and limit the amount of demin water used based on the system boron concentration and the volume of water in the refueling cavity.

2.3 Refueling Water Cleanup

The water in the refueling cavity or FWST can be recirculated any time for cleanup. Recirculation is accomplished using the FW pumps and KF demineralizers.

To cleanup the refueling cavity, the suction of the FW pump is aligned to the Refueling Cavity. The FW pump discharge is then aligned to the KF purification loop. The discharge of the purification loop is then routed back to the refueling cavity.
To clean up the FWST, the suction of the FW pump is aligned to the FWST. The discharge of the FW pump is then aligned to the KF purification loop. The discharge of the purification loop is then routed back to the FWST.

2.4 Recirculation of the Refueling Water

In order to maintain the suction header to the ECCS pumps greater than 70°F at all times, the water is circulated back to the heated FWST via the FWST Recirculation pumps.

2.5 Design Basis of the Refueling Water System

The Refueling Water System is designed to provide:

- A source of borated water at refueling water boron concentration for use during refueling or a postulated LOCA.
- Recirculate the refueling cavity and transfer canal for cleanup during refueling.
- Recirculate the water in the FWST for cleanup following refueling.

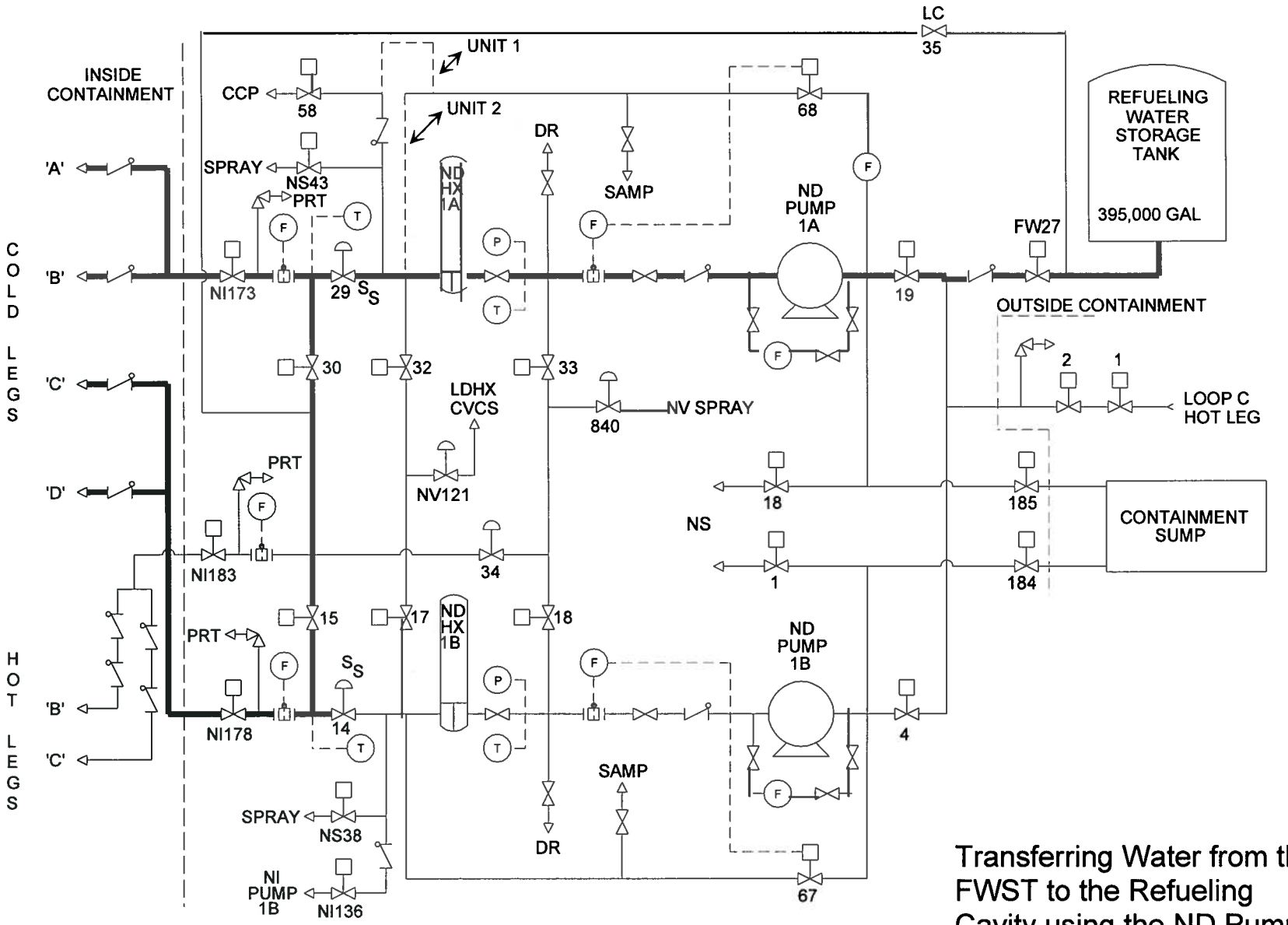

Transferring Water from the FWST to the Refueling Cavity using the ND Pump

SYS039 K4.05 - Main and Reheat Steam System (MRSS)
Knowledge of MRSS design feature(s) and/or interlock(s) which provide for the following: (CFR: 41.7)
Automatic isolation of steam line .....

Given the following conditions on Unit 1:

- A LOCA has occurred inside Containment
- Containment pressure is 3.4 PSIG
- The crew is preparing to initiate a cooldown per ES 1.2 (Post LOCA Cooldown and Depressuration)

Which ONE (1) of the following must occur to allow reopening the MSIV's for the given conditions?

A. Reset the Main Steam Isolation signal ONLY.

B. Reset the Phase B AND Main Steam Isolation signals ONLY.

C. Containment pressure must be reduced below 3 PSIG AND reset the Main Steam Isolation signal ONLY.

D. Containment pressure must be reduced below 3 PSIG AND reset BOTH the Main Steam Isolation signal and Phase B Isolation signal.

General Discussion

In the scenario given, a Main Steam isolation would have occurred due to a containment pressure reaching 3 PSIG. (Hi Hi Containment Pressure) In order for the operator to reset the main steam isolation signal, the crew would only be required to reset the MSI signal. The MSI signal associated with the Hi Hi containment pressure allows reset at any time regardless of Containment pressure.

Answer A Discussion

CORRECT: See explanation above.

Answer B Discussion

INCORRECT: See explanation above.

PLAUSIBLE: A high high containment pressure does exist (containment pressure > 3 psig). This condition would result in a Phase B isolation and a Main Steam isolation. It is plausible that the applicat could misinterpret the actuation of a MSI as being the result of a Phase B isolation. It would therefore be plausible to consider it necessary to reset both the Phase B signal and the main steam isolation signal to reopen the MSIVs.

Answer C Discussion

INCORRECT: See explanation above.

PLAUSIBLE: A high high containment pressure does exist (containment pressure > 3 psig). Some of the MSI actuation signals such as low S/G pressure require the signal to be cleared or blocked in order to reset MSI. It is plausible that the application would misinterpret Hi Hi containment pressure as being one of those signals and conclude that containment pressure must be reduced to reset the MSI signal.

Answer D Discussion

INCORRECT: See explanation above.

PLAUSIBLE: A high high containment pressure does exist (containment pressure > 3 psig). This condition would result in a Phase B isolation and a Main Steam isolation. It is plausible that the application would misinterpret the actuation of a MSI as being the result of a Phase B isolation. It would therefore be plausible to consider it necessary to address this condition prior to resetting the main steam isolation. Additionally, some of the MSI actuation signals such as low S/G pressure require the signal to be cleared or blocked in order to reset MSI. It is plausible that the application would misinterpret Hi Hi containment pressure as being one of those signals and conclude that containment pressure must be reduced to reset the MSI signal.

Basis for meeting the KA

K/A is matched because the applicant is required to evaluate a given scenario where a main steam isolation has occurred (Auto isolation of steam line) and possess knowledge of the MRSS design features and interlocks to determine actions required to allow reset of this signal.

Basis for Hi Cog

This is a hi cog question because it involves a level of analysis of given situation, apply system knowledge and solve a problem of what would be required to affect a reset of the main steam isolation signal.

Basis for SRO only

N/A

Job Level	Cognitive Level	QuestionType	Question Source
RO	Comprehension	BANK	MNS Bank Q # ASTMSMR05

Development References

OP-MC-STM-SM Rev 25 Pg 33 and 37

OP-MC-STM-SM Learning Objective #10

Student References Provided

SYS039 K4.05 - Main and Reheat Steam System (MRSS)
Knowledge of MRSS design feature(s) and/or interlock(s) which provide for the following: (CFR: 41.7)
Automatic isolation of steam line .....

401-9 Comments:

Remarks/Status

401-9 Comments:

In C and D: add "be" between must and reduced.
C is a subset of D. If C was correct, D would be also. C needs an "only".

QUESTION 17 2517 A

Resolution / Comments:

Added "be" in distracters C and D and ONLY at the end of distracter C as recommended by Lead Examiner. See attached file for revised version of question.

Question 17 References:

No.	OBJECTIVE	NLO	NLOR	LPRO	LPSO	LOR
9.	Concerning the S/G PORV's;					
	• List the open and close set points.	X	X	X	X	X
	• Discuss local operation of the valves.	X	X	X	X	X
	• Describe the operation and control of the valves.	X	X	X	X	X
10.	Concerning the Steam line Isolation signals;					
	• List the Steam line Isolation signals.	X	X	X	X	X
	• List the components affected by a MSI signal	X	X	X	X	X
	• State the set points and logic requirements for initiation.	X	X	X	X	X
	• Describe any operator actions required to reset the signal.			X	X	X
11.	Concerning the Main Steam line Isolation Valves;					
	• State the purpose of the Main Steam line Isolation Valves.	X	X	X	X	
	• Describe the operation and control during opening and closing.			X	X	X
	• Explain the importance of establishing less than 50 psid across the MSIV's prior to opening.			X	X	X
12.	Evaluate plant parameters to determine any abnormal system conditions that may exist.			X	X	X
13.	Concerning the Tech Specs related to the Main Steam System;					
	• Given the LCO title, state the LCO (including any COLR values) and applicability			X	X	X
	• For any LCO's that have action within one hour, state the action.			X	X	X
	• Given a set of parameter values or system conditions, determine if any Tech Spec LCO(s) is(are) not met and any action(s) required within one hour.			X	X	X
	• Given a set of plant parameters or system conditions and the appropriate Tech Specs, determine the required action.			X	X	X
	• Discuss the basis for a given Tech Spec LCO or Safety Limit.				X	*
	* SRO Only					

0.1. Instrumentation and Controls

Main Steam Isolation Initiation/Reset pushbutton

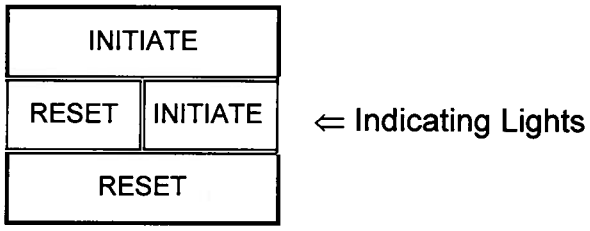

Objective #10

Two pushbuttons, Train A and Train B, used to initiate or reset MSI signal

Resets MSI signal if signal is cleared or blocked, except the MSI may be reset with the Hi-Hi Containment Pressure signal still present.

PORV/MSIV Bypass Reset Pushbuttons

Two reset pushbuttons (Train A & Train B)

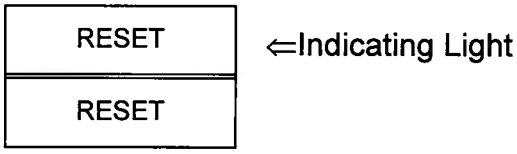

Allows Reset of PORV and/or MSIV Bypass valves

(MSI signal must be reset before PORV or MSIV Bypass can be reset)

From OP-MC-STM-SM Pg 33

<u>IF</u> MSIVs will not close, there are several different procedures that will reference an enclosure for locally closing MSIVs. EP/E-2.1 Uncontrolled Depressurization of All Steam Generators Enclosure 3 will locally close the MSIVs. The direction is to remove power from the solenoids by opening breakers on EVDA breaker 18 and EVDD breaker 23. <u>IF</u> valves still not fully closed then Maintenance will assist OPS in removing control air from the valves.

A test circuit for each valve was provided so that the valve could be tested during plant operation. This 90% partial stroke circuit is no longer required to be performed, so therefore a NSM MG-12563 has removed this test and switch.

Objective #11

To prevent a Main Steam line Isolation from occurring, due to a rapid decrease in S/G pressure, a differential pressure of less than 50 psid must be established across the MSIV's prior to opening them.

MSIV's receive an automatic close signal for any of the following:

- **Hi-Hi Containment Pressure**
- **Low steam line pressure > P-11**
- **High rate of pressure decrease < P-11 (if low steam line pressure is blocked)**
- **Manual Isolation pushbutton**

Parent Question:

Question 620 ASTMSMR05 ASTMSMR05
1 Pt Given the following conditions:

- A LOCA is in progress
- Containment Pressure is 4.2 psig

Which of the following must occur to allow reopening the MSIV's for the given conditions?

A. The Main Steam Isolation must be reset

B. Containment pressure must decrease below 3 psig and the Main Steam Isolation signal must be reset

C. Containment pressure must decrease below 3 psig, the Main Steam Isolation signal must be reset and the Phase B Isolation signal must be reset

D. The Main Steam Isolation signal must be reset and the Phase B Isolation signal must be reset

Answer 620

A
STM-SM, objective 10
Section 2.10

SYS059 2.4.31 - Main Feedwater (MFW) System
YS059 GENERIC
Knowledge of annunciator alarms, indications, or response procedures. (CFR: 41.10 / 45.3)

Given the following conditions on Unit 1:

- The unit is operating at 45% RTP
- Channel 1 Main Turbine Impulse pressure indicates 310 PSIG
- Channel 2 is indicating 0 PSIG
- The AMSAC "UNBLOCK" light is DARK

Which ONE (1) of the following describes the current status of the AMSAC system?

A. Auto actuation is NOT functional.
The loss of CF flow path auto actuation can NOT be restored until the failed impulse channel is repaired.

B. Auto actuation is NOT functional.
The loss of CF flow path auto actuation can be restored by depressing the AMSAC Actuation "UNBLOCK" pushbutton.

C. Auto actuation will occur if both Feedwater pumps trip.
The loss of CF flow path auto actuation can NOT be restored until the failed impulse channel is repaired.

D. Auto actuation will occur if both Feedwater pumps trip.
The loss of CF flow path auto actuation can be restored by depressing the AMSAC Actuation "UNBLOCK" pushbutton.

General Discussion

During power escalation when Turbine impulse pressure reaches 290 psig on 2/2 channels, the circuit will automatically reinstate full AMSAC protection. In the scenario given in this question, one channel has failed low and therefore this auto reinitiation did not occur and the UNBLOCK light is dark. The circuit can be unblocked any time the UNBLOCK pushbutton is depressed and if at least one turbine impulse channel is greater than 290 psig, the circuit will remain armed.
AMSAC has two actuation signals; one is due to a loss of CF flowpath. This feature is blocked and unblocked as described above. The second is due to a loss of both CF pumps and cannot be blocked and therefore always active.

Answer A Discussion

INCORRECT: See explanation above.

PLAUSIBLE: Part (1) is plausible if the applicant confuses the block/ unblock function of AMSAC as applicable to both the loss of CF flowpath and the loss of CF pumps.

Part (2) is plausible if the applicant confuses the requirement for 2 channels >290 psig as being required in order to either automatically or manually reinstate AMSAC protection. This would seem reasonable as a fail safe mode for the circuit.

Answer B Discussion

INCORRECT: See explanation above.

PLAUSIBLE: Part (1) is plausible if the applicant confuses the block/ unblock function of AMSAC as applicable to both the loss of CF flowpath and the loss of CF pumps.

Part (2) is correct and therefore plausible.

Answer C Discussion

INCORRECT: See explanation above.

PLAUSIBLE: Part (1) is correct and therefore plausible.

Part (2) is plausible if the applicant confuses the requirement for 2 channels >290 psig as being required in order to either automatically or manually reinstate AMSAC protection. This would seem reasonable as a fail safe mode for the circuit.

Answer D Discussion

CORRECT: See explanation above.

Basis for meeting the KA

K/A is matched because the applicant is required to evaluate a given set of indications associated with the AMSAC system and apply system knowledge to determine the current status.

Basis for Hi Cog

The applicant is required to evaluate a given set of indications and apply system knowledge associated with the MFW system to predict an outcome and solve a problem concerning how arming the system is either possible or not possible in the present situation.

Basis for SRO only

Job Level	Cognitive Level	QuestionType	Question Source
RO	Comprehension	BANK	MNS Bank Q # CFCF044

Development References

Lesson Plan OP-MC-CF-CF Rev 34, Pgs. 41-43

OP-MC-CF-CF, Objective 16

Student References Provided

SYS059 2.4.31 - Main Feedwater (MFW) System
SYS059 GENERIC
Knowledge of annunciator alarms, indications, or response procedures. (CFR: 41.10 / 45.3)

401-9 Comments:

Remarks/Status

401-9 Comments:

QUESTION 18 2518 D

In distractor C: add "the" before Loss.
Change "cannot" to "can NOT"

Resolution / Comments:

Changed question per Lead Examiner's recommendation. Distracter A need a "the" before Loss also. See attached file for revised version of question.

Question 18 References:

SEQ	OBJECTIVE	NLO	NLOR	LPRO	LPSO	LOR
11	Explain why and how CF flow is transferred from the CF nozzle to the CA nozzle and vise versa.	X	X	X	X	
12	Explain the Feedwater Isolation actuation circuit.	X	X	X	X	X
13	List the CF valves that isolate on a Feedwater Isolation Signal.	X	X	X	X	X
14	Describe the automatic actions that occurs on: • Hi Hi Doghouse Level • Hi Hi S/G Level (P-14).	X	X	X	X	X
15	Explain the purpose of the "Anticipated Transient Without Scram Mitigation System Actuation Circuitry" (AMSAC).	X	X	X	X	X
16	Concerning AMSAC: • State the automatic action that occurs as a result of an AMSAC signal • List the parameters that will actuate the AMSAC automatic actions • Discuss the development of the actuation signals, to include the components monitored and setpoints.	X	X	X	X	X
17	Concerning the AMSAC Block/Unblock switch: • State the purpose of each position (Block and Unblock) • State when each position may be used. • Differentiate between the "Manual" block function and "Auto" block functions (include the 2 minute time delay for auto blocking).	X	X	X	X	X

2.11 ATWS Mitigation System Actuation Circuitry (AMSAC)

Objective #15

The purpose of this circuit is to:

- **Prevent NCS overpressurization during a loss of main feedwater accompanied by an Anticipated Transient Without a Scram (ATWS).**
- **Trip the Main Turbine and start both motor driven CA pumps if a loss of main feedwater occurs or is anticipated.**

Objective #16, 17, 18, 19, 20, 21

The AMSAC circuit monitors conditions that are indicative of an ATWS event as required by 10CFR50.62. An AMSAC actuation decreases the severity of an ATWS event by minimizing the peak pressure in the NC System.

When actuated, AMSAC will:

- **Trip the Main Turbine**
- **Start both motor driven CA pumps**
- **Light the AMSAC Turb Trip Annunciator (1AD1-B1)**

The AMSAC circuit can be divided into three sections:

- Loss of both CF pumps logic
- Loss of CF flow path to the S/Gs logic
- Block/Unblock logic

The loss of both CF pump logic for AMSAC uses six pressure switches (three for each CF pump) which monitor each pump's control oil pressure (refer to Drawing 7.13).

> Note: The loss of both CF pumps logic for AMSAC is different than the normal scheme that senses loss of both CF pumps. The normal scheme only uses two (2) pressure switch per pump (1LPPS5180 and 1LPPS5184 for "A" CF pump and 1LPPS5190 and 1LPPS5194 for "B" CP pump).

Control oil pressure is used to hold the CF pump turbine stop valves open. If 2 out of 3 pressure switches on the same CF pump turbine sense a loss of oil pressure (setpoint < 45 psig) a signal will be sent to AMSAC. If both CF pumps lose control oil pressure, AMSAC will be actuated on a loss of both CF pumps. The loss of both CF pump AMSAC actuation can not be blocked. A selector switch at each CF pump local control panel provides a means for defeating each pressure switch (one at a time) for testing.

From OP-MC-CF-CF Pg 43

The loss of CF flow path logic looks at the CF containment isolation valves, S/G CF control valves (main control valves and bypass valves), and combinations of these which could result in a loss of CF flow to the S/Gs. (refer to Drawing 7.14)

- When a CF containment isolation valve goes fully closed a signal is sent to AMSAC. If 3 out of 4 CF containment isolation valves close, AMSAC will actuate (if unblocked).
- A CF main feed regulating valve (FRV) must be at least 25% open if its associated bypass valve is not fully open in order for AMSAC to consider the flow path viable. Each S/G has a status light "AMSAC S/G A(B)(C)(D) Low Flow" on 1SI4-A4(B4)(C4)(D4) to warn the operator of the condition of the flow path for that S/G. If the flow path for one S/G does not meet these criteria for 30 seconds, a status light "Any CF S/G path closed > 30 sec" on 1SI4-D3 will warn the operator. If 3 out of 4 flow paths are not viable for 30 seconds, AMSAC will actuate. The 30 second time delay allows operator action or for the transients to stabilize. Annunciator "3 of 4 CF S/G Paths Closed > 30 sec" on 1AD4, F5 indicates that AMSAC will be actuating (assuming it is not blocked).
- Any combination of containment isolation valve closure or CF main FRV closure from 3 out of 4 S/G flow paths will actuate AMSAC.

During normal plant load reduction/plant shutdown, CF flow requirements will be so low that the "Loss of CF flow Path Logic" (i.e. CF bypass valve fully open with CF control valve greater than 25% open) will not be satisfied. Under these controlled evolutions, AMSAC protection is not required, therefore the Block/Unblock logic provides an auto block of AMSAC when turbine impulse pressure decreases below or equal to 260 psig (± 3 psi) for greater than 2 minutes. As power is increased, this circuit will automatically re-instate the protection above 290 psig turbine impulse pressure. When the AMSAC circuit is active (unblocked), the white UNBLOCKED light will be lit (see figure below). The Block/Unblock logic only applies to the Loss of CF Flow path logic. The loss of both CF pumps logic is always active. When tripping the last CF pump during plant shutdown, the operator can depress the CA motor driven pump auto start defeat switch to prevent the auto start of the CA pumps.

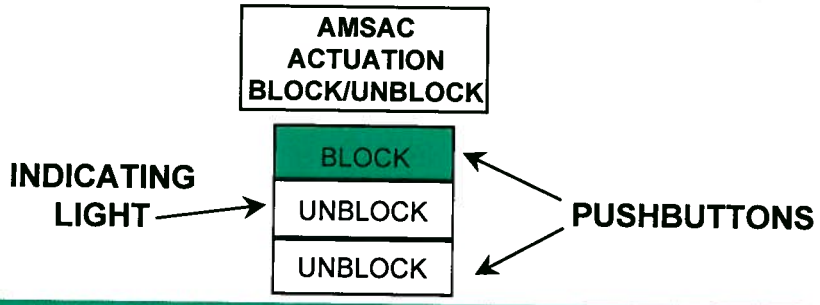

Depressing the AMSAC "UNBLOCK" pushbutton allows the operator to arm AMSAC for the control valve logic when only one pressure switch indicates greater than 290 psig (one pressure switch could have failed low).

Parent Question CFCF044

1 Pt

Given the following conditions on Unit 1:

- Unit 1 is at approximately 45% power.
- One channel of Main Turbine Impulse pressure indicates 310 psig while the other channel indicates 0 psig.
- The AMSAC "UNBLOCK" light is dark

Which ONE of the following describes the current status of the AMSAC system?

A. No AMSAC system auto actuations are currently functional, but can be returned to service by depressing the AMSAC Actuation "UNBLOCK" pushbutton.

B. No AMSAC system auto actuations are currently functional, but can be returned to service by depressing the AMSAC Actuation "BLOCK" pushbutton.

C. An automatic AMSAC actuation will occur if both Feedwater pumps trip. The Loss of CF flow path auto actuation can be restored by depressing the AMSAC Actuation "UNBLOCK" pushbutton.

D. An automatic AMSAC actuation will occur if both Feedwater pumps trip. The Loss of CF flow path auto actuation can not be restored until the failed impulse channel is repaired.

Answer 61

C

C

2010 MNS SRO NRC Examination QUESTION 19

2519

SYS061 K2.01 - Auxiliary / Emergency Feedwater (AFW) System
Knowledge of bus power supplies to the following: (CFR: 41.7)
AFW system MOVs .....

Given the following conditions on Unit 1:

- The unit has experienced a Loss of all AC
- Crew has implemented ECA 0.0 (Loss Of All AC Power)
- Unit 1 Control has been swapped to the SSF
- An NEO has been dispatched to close the feeder breaker for 1CA-161C (CA Suction Hdr RN Supply Isol)

Based on the conditions described above which ONE (1) of the following states where the NEO would be dispatched to perform this action?

A. SMXG

B. SMXG1

C. SDSP-1

D. 1EVDA-1

General Discussion

SDSP-1 is the power supply to 1CA-161C. This is a 250V power panel board located in the SSF and remains energized when control is transferred to the SSF.

Answer A Discussion

.INCORRECT: See explanation above.

PLAUSIBLE: MCC SMXG is located at the SSF and would be powered by the SSF D/G after a transfer of control to the SSF. A number of SSF related valves are powered from this MCC but not 1CA-161.

Answer B Discussion

INCORRECT: See explanation above.

PLAUSIBLE: MCC SMXG1 is located at the SSF and would be powered by the SSF D/G after a transfer of control to the SSF. A number of SSF related valves are powered from this MCC but not 1CA-161.

Answer C Discussion

CORRECT: See explanation above.

Answer D Discussion

INCORRECT: See explanation above.

PLAUSIBLE: Power panel board 1EVDA-1 is the supply to 1NC-272C and 1NC-273C which are train C valves controlled from the SSF. It would reasonable for the applicant to include 1CA-161C with this power supply.

Basis for meeting the KA

This K/A is matched because in order to correctly answer the question the applicant must utilize knowledge of the bus power supply to 1CA-161C which is a AFW system MOV.

Basis for Hi Cog

Basis for SRO only

Job Level	Cognitive Level	QuestionType	Question Source
RO	Memory	NEW	

Development References

Lesson Plan OP-MC-CF-CA Rev 43 Pg 23

Student References Provided

SYS061 K2.01 - Auxiliary / Emergency Feedwater (AFW) System
Knowledge of bus power supplies to the following: (CFR: 41.7)
AFW system MOVs .....

401-9 Comments:

Remarks/Status

401-9 Comments:

No comment.

Resolution / Comments:

N/A

Question 19 References:

From OP-MC-CF-CA Pg 23 (Rev 43)

In the event of a seismically induced failure of the CAST, no accident mitigation system or safety-related equipment will be adversely affected by flooding of the plant yard. The plant storm drainage system and other design features will prevent flooding of any safety-related structures, systems or components. The flooding of the Turbine Building from a failure of the CAST could release 300,000 gallons (40,000 cubic feet) of water into the Turbine Building. The water flows from penetrations in the mezzanine floor of the stairwells and migrates to the Turbine Building Sumps. The volume of the sumps and pits below the Turbine Building basement elevation is 72,100 cubic feet. Since the volume of the water in the tank is less than the sump volume, the sumps would contain this volume.

2.3.2 Assured Suction Source

Objective # 10, 11, 12

Nuclear Service Water (RN). **RN is the safety related water source for the CA system. The RN suction source will align automatically on low CA pump suction pressure (3.5 psig for 2.5±.5 sec, except 2A pump is 4.5 psig).** The supply valves, RN-162B, CA-18B and CA-116B, are NORMALLY CLOSED. **The DG HX inlet valves on B train are interlocked such RN-171B will open when CA-18B opens. The DG interlock ensures that adequate RN flow is available to supply the CA pumps. This only applies to B train.** The A train RN supply to CA is on the inlet to the DG HX and has a higher supply pressure and does not go thru the KD HX to the CA suction.

NOTE: Automatic cycling the RN supply to CA suction valves is considered an "ESF Actuation" and is reportable per RP-10 unless intentionally cycled for maintenance.

Standby Shutdown Facility Supply (RN/RC). **Supply valves CA-161C and CA-162C will automatically align to the Turbine Driven CA pump for SSF operation (3 psig for 2.5±.5 sec) and are also opened from the SSF when it is activated for an event.** The RN system provides the flow path from the embedded condenser circulating water pipe to provide this assured source.

NOTE: 1CA-161C and 1CA-162C are DC powered valves from SDSP 1D and 2C. On low pressure signal, control power locks-in signal until "reset" by fully opening valves 1CA-161C and 1CA-162C. Pulling the DC power fuses will also reset signal.

2010 MNS SRO NRC Examination QUESTION 20

2520

B

SYS062 A3.05 - AC Electrical Distribution System
Ability to monitor automatic operation of the ac distribution system, including: (CFR: 41.7 / 45.5)
Safety-related indicators and controls .....

Given the following conditions on Unit 1:

- B Train of essential equipment is in operation on Unit 1
- OP/1/A/6350/002 (Diesel Generator) is in progress with the 1A Diesel running in parallel to the grid when the following sequence of events occurs:
  - Load is reduced on the diesel to 200KW in anticipation of opening the Emergency Breaker
  - The RO accidentally OPENS the Normal Feeder Breaker from 1ATC

The "Blackout Sequencer Actuated Train A" status light on SI-14 _____.

Which ONE (1) of the following completes the statement above?

A. illuminates and the 1A DG load increases

B. remains dark and the 1A DG load increases

C. illuminates and the 1A DG Emergency Breaker trips open, then re-closes 8.5 seconds later

D. remains dark and the 1A DG Emergency Breaker trips open, then re-closes 8.5 seconds later

---

General Discussion

Since the Emergency Breaker is already closed no loss of voltage to 1ETA so the Diesel picks up the remaining load on 1ETA.

Answer A Discussion

INCORRECT. See explanation above.

PLAUSIBLE: This answer is plausible if the applicant does not understand what causes the Sequencer Status Light to actuate. The second part regarding the DG load increasing is correct.

Answer B Discussion

CORRECT. See explanation above.

Answer C Discussion

INCORRECT. See explanation above.

PLAUSIBLE: This answer is plausible if the applicant concludes that the DG load sheds and then picks the bus back up when the sequencer operates. However, no Blackout relay actuates. It is also plausible if the applicant concludes that the Emergency Breaker trips open on overcurrent. However, the Emergency Breaker will NOT trip on overcurrent if the Essential Bus is disconnected from another power source.

Answer D Discussion

INCORRECT. See explanation above.

PLAUSIBLE: This answer is plausible if the applicant concludes that the DG load sheds and then picks the bus back up when the sequencer operates and does not understand what causes the Sequencer Status light to actuate. However, no Blackout relay actuates. It is also plausible if the applicant concludes that the Emergency Breaker trips open on overcurrent. However, the Emergency Breaker will NOT trip on overcurrent if the Essential Bus is disconnected from another power source.

Basis for meeting the KA

The KA is matched because the applicant demonstrates the ability to monitor automatic operation of the AC distribution system (i.e. diesel loading) based on DG KW indication and Sequence operation (or in this case it does not operate).

Basis for Hi Cog

This is a higher cognitive level question because it requires a level of analysis beyond simple memorization.

Basis for SRO only

Job Level	Cognitive Level	QuestionType	Question Source
RO	Comprehension	BANK	2008 MNS NRC Q21

Development References	Student References Provided
Lesson Plan OP-MC-DG-EQB Section 2.4 and 3.3	

SYS062 A3.05 - AC Electrical Distribution System

Ability to monitor automatic operation of the ac distribution system, including: (CFR: 41.7 / 45.5)

Safety-related indicators and controls .....

401-9 Comments:	Remarks/Status
	Proposed replacement for 2010 NRC Q-20. Replacement question appoved RFA 07/06/10

Question 20 Proposed Replacement References:

From DG-EQB Section 2.4:

There are an additional 37 lights on the sequencer panel which are used during testing to monitor the signals sent to the 4160V switchgear and 600V load centers. In addition, these lights verify the status of the contacts after testing and serve as the overlapping requirement for switchgear operation.

Annunciator alarms in Control Room

- "Sequencer A (B) in Test", AD-11, B-1 (E-1)

  This alarm alerts the operator that the sequencer test key switch is in a position other than OFF. The operator has no control of components on the respective bus when this alarm is actuated.
- "Sequencer A (B) Loss of Control Power", AD-11, B-2 (E-2)

  This alarm alerts the operator that the sequencer has lost control power and it will not operate.
- "ETA (ETB) Degraded Voltage", AD-11, L-1 (L-2)

  (< 3689 Volts on ETA (ETB) for 10 seconds (≈88% normal bus voltage)

  1. **IF** a degraded bus voltage condition continues to exist following a 10 second time delay and a Safety injection signal occurs, a separation of offsite power will be initiated immediately (10 minute time delay is bypassed).
  2. **IF** degraded bus voltage condition is not cleared before 10 minute time delay, the bus will be separated from the offsite power supply by the tripping and lockout of 1ETA normal and alternate incoming breakers.
  3. "Loss of voltage" (Blackout) sequencer logic will start as a result of tripping the normal and alternate circuit breaker.

Status indication in Control Room (on SI-14)

- "LOCA Sequencer Actuated Train A or Train B"
- "Blackout Sequencer Actuated Train A or Train B"
- "ETA (ETB) Undervoltage on Phase X, Y or Z
- "ETA (ETB) Degraded Voltage Relays"

Computer Digital Inputs

- Sequencer A (B) Reset complete/not complete
- Sequencer A (B) complete/not complete
- Sequencer A (B) Control Voltage low/normal
- Sequencer A (B) Test Relays actuated/not actuated
- Sequencer A (B) LOCA actuated /not actuated
- Sequencer A (B) Reset actuated/not actuated

There is local indication, a control room annunciator, and a computer point to indicate a loss of control voltage for the 4160-Volt Degraded Voltage Instrumentation

Question 20 Proposed Replacement References Section 2.4:

Should a Safety Injection signal occur at any time after the first time delay relay completes its cycle, the circuit will automatically initiate separation from the offsite power source and transfer to the emergency diesel generators.

Protection for a severe diesel-generator overload accompanied by a system voltage dip caused by events such as a Loss of Off-Site Power (LOOP) with the Diesel Generator operating in parallel with the grid is provided by the voltage-controlled overcurrent relay (51V). This relay consists of three single phase relays (51VX, 51VY, and 51VZ). The operation of any one of these phase relays will activate an annunciator alarm in the control room (AD-11, A-4 (D-4), D/G A (B) Overcurrent) to warn the operator of an overload condition (800 amps @ 3360 volts). Operation of any two of these overcurrent relays will result in operation of the diesel-generator lockout relay (86D). Diesel-generator lockout relay (86D) will trip and lockout the diesel-generator switchgear breaker and initiate a shutdown of the diesel-generator. This lockout must be reset by hand before the breaker can be reclosed.

3.3 Sequencer operation during a Blackout

Objective # 5

Sequencer operation during a Blackout with no safety injection signal and the under-voltage is not due to fault relay 86N, 86S or 86B.

If 2/3 LOV Relays sense a loss of voltage on their associated 4160V bus, the blackout relay will pick up and actuate a D/G start. If the UV condition still exists after 8.5 seconds, the blackout logic is sealed in. All 4160V breakers on the bus are then tripped open. When D/G speed is ≥ 95%, the output breaker will close. When bus voltage is ≥ 92.5% and D/G speed is ≥ 97%, the accelerated sequence is enabled. Blackout loads will be sequentially applied at intervals of approximately 2 seconds, as long as bus voltage remains ≥ 92.5% and frequency remains > 58.2 Hz. Complete loading of all blackout loads, via the accelerated sequence, could be done in as little as 25 seconds. If during the sequencing of blackout loads the Sequencer RESET pushbuttons are depressed, no additional sequencing will occur. This is because once the RESET pushbuttons are depressed, the blackout signal is removed and since there is power on the 4160V bus a blackout no longer exists. It would require another blackout signal or manual loading of the bus to complete the sequencing of loads.

Should the Accelerated Sequence Relay scheme fail to work, the Committed Sequence would be actuated approximately 10 seconds after the diesel receives its blackout start signal if load shed of the bus has been completed. The committed sequence may take up to 12 minutes to load all blackout loads. The committed sequence does not require any minimum voltage or minimum frequency to allow it to progress as does the Accelerated Sequence. The Committed Sequence is required by Technical Specifications.

Parent Question 2008 NRC Exam Question 21:

Examination Outline Cross-reference:	Level	RO	SRO
	Tier #	2	
	Group #	1	
	K/A #	062 A3.05	
	Importance Rating	3.5	

(Ability to monitor automatic operation of the AC distribution system, including: Safety-related indicators and controls)

Proposed Question: Common 21

The B Train of essential equipment is in operation on Unit 1.

While performing OP/1/A/6350/002 (Diesel Generator) with the 1A Diesel running in parallel to the grid, the following sequence of events occurs:

- Load is reduced on the diesel to 200KW in anticipation of opening the Emergency Breaker.
- The RO accidentally OPENS the Normal Feeder Breaker from 1ATC.

Which ONE (1) of the following completes the statement below?

The Blackout Sequencer Actuated Train A status light on SI-14.....

A. lights and the Emergency Breaker trips open, then re-closes 8.5 seconds later.

B. remains dark and the Emergency Breaker trips open, then re-closes 8.5 seconds later.

C. lights and the 1A DG Load increases.

D. remains dark and the 1A DG Load increases.

Proposed Answer: **D**

Explanation (Optional):

A. Incorrect. Section 3.3 of OP-MC-DG-EQB states that If 2/3 LOV Relays sense a loss of voltage on their associated 4160V bus, the blackout relay will pick up and actuate a D/G start. If the UV condition still exists after 8.5 seconds, the blackout logic is sealed in. However, with the Emergency Breaker closed, there is NO loss of voltage on 1ETA.

B. Incorrect. While it is true that the BO signal will not exist, the Diesel Breaker will NOT trip open (Section 2.7 of OP-MC-DG-DG) on overcurrent with the Essential Bus disconnected from another power source.

C. Incorrect. No BO Relay will operate (see A)

D. Correct. The Emergency Breaker is closed and the Diesel will pick up the remaining load on 1ETA.

Technical Reference(s)	OP-MC-DG-EQB pages 17, 23, 3	(Attach if not previously provided)
	OP-MC-DG-DG page 35, Rev 25	(Including version or revision #)

Proposed references to be provided to applicants during examination: None

Learning Objective: DG-EQB #5 (As available)

Question Source:

Bank #		
Modified Bank #	McGuire NRC Bank # 187	(Note changes or attach parent)
New		

Question History: Last NRC Exam NA

Question Cognitive Level:

Memory or Fundamental Knowledge	
Comprehension or Analysis	X

10 CFR Part 55 Content:

55.41	7
55.43	

Comments:
KA is matched because Sequencer indication (status light) is evaluated for a condition where AC Power is interrupted

RFA Concurs 4/18/08

SYS063 A3.01 - DC Electrical Distribution System

bility to monitor automatic operation of the DC electrical system, including: (CFR: 41.7 / 45.5)

Meters, annunciators, dials, recorders, and indicating lights .....

Given the following plant conditions:

- Both Units operating at 100% RTP
- A complete Loss of Offsite Power occurred on Unit 1
- 1A D/G started but subsequently tripped on Low Lube Oil Pressure
- 30 seconds have passed since the Loss of Offsite Power occurred

Which ONE (1) of the following describes the condition of the components listed below?

1. 125 VDC Vital Distribution Center (EVDA)

2. Annunciator 1AD-11 / B2 (Seq A Loss of Control Pwr)

A. 1. Energized
   2. "LIT"

B. 1. Energized
   2. "DARK"

C. 1. De-energized
   2. "LIT"

D. 1. De-energized
   2. "DARK"

General Discussion

During a blackout or LOOP event, on one or both trains, the essential motor control centers feeding the vital I & C battery chargers, associated with the affected train, will be load-shed by the diesel generator loading sequencer. Normally the battery chargers would be reloaded but in the scenario given the associated D/G has tripped and is not available. During the time period that the battery chargers are de-energized, the batteries, alone, feed the vital instrumentation and control loads. In this case it would be Battery EVCA feeding power panel board 1EVDA. Annunciator 1AD-11 B2 (Seq A Loss of Control Pwr) is fed from 1EVDA. If 1EVDA were de-energized this alarm would be Lit.

Answer A Discussion

INCORRECT: See explanation above.

PLAUSIBLE: First part is correct.

Second part is plausible if the applicant does not understand what will cause power to be lost to the sequencer or concludes that on a LOOP control power is lost to cause sequencer actuation.

Answer B Discussion

CORRECT: See explanation above.

Answer C Discussion

INCORRECT: See explanation above.

PLAUSIBLE: Part 1 is plausible if the applicant confuses the loss of the battery charger (caused by the LOOP) with the loss of bus EVDA. If that were the case, the applicant could conclude that EVDA is de-energized. While the battery chargers will have been lost and not supplying the batteries until they are restarted, the battery will continue to supply EVDA until battery voltage decreases to the point that EVDA must be separated from the battery (by procedure).

Part 2 is plausible (because it would be correct) if the applicant concludes that EVDA is deenergized.

Answer D Discussion

INCORRECT: See explanation above.

PLAUSIBLE: Part 1 is plausible if the applicant confuses the loss of the battery charger (caused by the LOOP) with the loss of bus EVDA. If that were the case, the applicant could conclude that EVDA is de-energized. While the battery chargers will have been lost and not supplying the batteries until they are restarted, the battery will continue to supply EVDA until battery voltage decreases to the point that EVDA must be separated from the battery (by procedure).

Second part of the question is correct.

Basis for meeting the KA

This system K/A is associated with the ability to monitor the automatic operation of the DC Distribution system including annunciators. In this question the applicant must understand how the vital DC distribution will operate in a situation where a loss of AC has occurred with the train normally supplying power. He is also asked to evaluate the status of this distribution system based on annunciator indication.

Basis for Hi Cog

This is a hi cog question because it involves a level of analysis of given situation, apply system knowledge and solve a problem of what both would be the effect and how the system would respond to the conditions given in the stem.

Basis for SRO only

Job Level	Cognitive Level	QuestionType	Question Source
RO	Comprehension	NEW	

Development References

Lesson Plan OP-MC-EL-EPL Pg: 37 (Rev 23)

OP-MC-EL-EPL Obj: 20

Student References Provided

SYS063 A3.01 - DC Electrical Distribution System

Ability to monitor automatic operation of the DC electrical system, including: (CFR: 41.7 / 45.5)

Meters, annunciators, dials, recorders, and indicating lights .....

401-9 Comments:

Remarks/Status

401-9 Comments:

C and D are NP. I disagree with distractor analysis for C1 and D1. In order to give C1 and D1 plausibility, you will have to significantly increase the loss of AC down time to almost battery exhaustion (within minutes).
This Q is U because C and D are NP

Resolution / Comments:

Believe that "C" and "D" are plausible. We had one validator that picked "C". When asked why they picked "C" they commented that they had mistakenly concluded that "1" was asking for the status of the 125VDC Battery Charger instead of the Distribution Center.

Question 21 References:

18	Describe the function of the following inverter indications and controls: • output amps • output voltage • output frequency • alternate AC source input frequency • pre-charge push-button • pre-charge light • in-sync light • alternate source off-frequency light • inverter supplying load light • alternate AC source supplying load light • main semi-conductor fuse failure light • low DC input voltage light • low AC output voltage light • high AC output voltage light • low alternate AC source voltage light • inverter failure light • overtemperature light • alarm bypass circuit trouble light • fan failure light • alarms bypassed key switch	X	X	X	X	X
19	Given a Limit and/or Precaution, associated with the 125 VDC and 120 VAC Vital Instrumentation and Control Power Systems, discuss its basis and applicability.	X	X	X	X	X
20	Describe the expected operation of the 125 VDC and 120 VAC Vital Instrumentation and Control Power Systems during a Blackout or LOOP (Loss of Off-Site Power) Event.	X	X	X	X	X

3.2 Abnormal and Emergency Operation

Objective # 20

During a blackout or LOOP event, on one or both trains, the essential motor control centers feeding the vital I & C battery chargers, associated with the affected train, will be load-shed by the diesel generator loading sequencer. Within eleven seconds after the diesel generator start signal the affected essential motor control centers and battery chargers will be reloaded onto the essential bus by the diesel generator loading sequencer.

During the time period that the battery chargers are de-energized, the batteries, alone, feed the vital instrumentation and control loads. Protective diodes, within each battery charger, prevent the associated battery from discharging through its battery charger when the charger is de-energized.

Objective # 21

During a safety injection the vital I & C battery chargers are treated as a safety injection load and should remain energized. However, during a blackout condition or a safety injection with a blackout the vital I & C battery chargers will first be load-shed and then reloaded, within eleven seconds, after the diesel generator start signal.

AP/1(2)/A/5500/07, Loss of Electrical Power directs the operator to realign the vital battery chargers once normal power is available. This is done by:

1. Determining which battery chargers are actually being powered from Unit 1 or Unit 2 (dependent upon which unit experienced the loss of electrical power).
2. Depressing the STOP push-button on the vital battery chargers that are being powered from the opposite unit (Unit 2 if the event was on Unit 1 / Unit 1 if the event was on Unit 2)

This is done because the loading sequencer will close the "m" contacts for all the battery chargers. However, the battery charger will only be receiving power, from the selected MCC, based on the breaker closed within the charger connection box (protected by the Kirk Key Interlock).

AP/1(2)/A/5500/15, Loss of Vital or Aux Control Power provides direction to the operator in diagnosing and responding to a loss of a Vital DC <u>or</u> AC Bus. Refer to current copy of this AP for Symptoms and Immediate Actions.

Objective # 23

AP-15, Enclosure 1 (Response to Degraded DC Bus Voltage) directs the operator to remove the battery from service if its voltage decreases to 105 Volts. The reason for this is that as voltage decreases, current will increase. This is explained by the formula P=IE (Power = Amps x Volts). The increase in current could damage the loads supplied by the battery. Additionally, the operator should recognize that as the battery voltage decreases and the current increases, **the battery discharge <u>rate</u> will increase steadily until the battery is exhausted.**

Nomenclature:	SEQ A LOSS OF CONTROL PWR	Window:	B2

Setpoint: NA

Origin: Alarm relay (74A) on Sequencer A control power

Probable Cause: Feeder breaker 1EVDA-6 open

Automatic Action: Sequencer inoperable

Immediate Action:

1. **IF** cause of alarm is known (expected alarm) **AND** Sequencer logged in Tech Specs, no further action required.
2. Check closed 1EVDA-6.

Supplementary Action:

1. Notify SRO.
2. Refer to Tech Specs.

References:

- UFSAR, Figure 8-35
- MC-1705-01
- MCS-114.00-EQB-0001
- MC-1753-01.01
- MC-1765-00.02
- MCEE-114-00.06-01
- Tech Specs

End Of Response

SYS063 K4.01 - DC Electrical Distribution System

nowledge of DC electrical system design feature(s) and/or interlock(s) which provide for the following: (CFR: 41.7)

Manual/automatic transfers of control .....

Given the following plant conditions:

- Both Units are operating at 100% RTP
- Battery 1DP is aligned for equalizing charge
- The DC Output breaker for Charger 1DS has tripped open

Which ONE (1) of the following describes the current status of Bus 1DP?

A. Bus 1DP will be de-energized.

B. Bus 1DP will be energized from Charger 1DP ONLY.

C. Bus 1DP will be energized from Chargers 1DP and 2DP.

D. Bus 1DP will be energized from Charger 1DP and Battery 1DP.

General Discussion

During an "equalizing charge", the battery (1DP) is disconnected from its distribution center and the standby charger (1DS) performs the charging operation while the normal battery charger supplies the distribution center. Both distribution centers are electrically cross-connected through the bus tie breakers (Normally Closed). This alignment ensures that there is a battery to supply both busses so that a loss of power will not result in the loss of either bus (1DP or 2DP).

During the battery charge, the DC bus (distribution center) must be disconnected from the battery (1DP) and the charger performing the charge (1DS) due to the high voltage (approx. 271 VDC) and current conditions existing during the charge.

In this alignment, if the charger 1DS output breaker trips, the U-1 and U-2 250 VDC buses (1DP and 2DP) would be supplied by their normal chargers (1DP and 2DP). On a complete loss of power, buses 1DP and 2DP would be supplied by the 2DP battery.

Answer A Discussion

INCORRECT: See explanation above.

PLAUSIBLE: The situation described in the stem would result in the loss of battery charger 1DS and effectively the loss of battery 1DP as well because both the battery and the standby charger are electrically disconnected from the bus. If the applicant does not remember that during a equalize charge the cross ties between the two unit 250 VDC buses are closed, this could seem a reasonable answer. Also, the applicant could confuse the alignment during an equalize charge with how it is accomplished for the 125V Vital Buses where the 'Normal' charger is used for the equalize charge and the stby charger supplies the bus.

Answer B Discussion

INCORRECT: See explanation above.

PLAUSIBLE: Charger 1DP is electrically aligned to bus and is supplying power to it. If the applicant does not remember that during a equalize charge the cross ties between the two unit 250 VDC buses are closed, this could seem a reasonable answer. This information is not given in the stem and therefore required the recall of system knowledge to eliminate it as a possible answer.

Answer C Discussion

CORRECT: See explanation above.

Answer D Discussion

INCORRECT: See explanation above.

PLAUSIBLE: Charger 1DP is electrically aligned to bus and is supplying power to it. If the applicant does not remember that during a equalize charge the battery and the Stby Charger are disconnected from the bus this would be a reasonable choice. All the applicant is given is that the Stby charger output breaker has tripped open, there is no information given about how the system is aligned other than the type of charge that is being performed.

Basis for meeting the KA

K/A is matched because the applicant must understand how the 250 VDC system is designed to function during an equalization charge on a battery. The "Auto/Manual" transfer of control for a DC system is a difficult concept to test because the "transfer" is passive and dependent on the alignment. This question examines the understanding of how the system will respond to an interruption (loss of charger) and therefore requires an understanding of how this passive transfer will take place.

Basis for Hi Cog

This is a high cog question because it requires more than one mental step. First, the applicant must recall from memory the electrical lineup during and equalizing charge on the 1DP Battery. The applicant must then determine the effect of the DC Output breaker on the battery charger opening on the 1DP Bus.

Basis for SRO only

Job Level	Cognitive Level	QuestionType	Question Source
RO	Comprehension	BANK	MNS Bank Q ELEPJ007

Development References

Lesson Plan OP-MC-EL-EPJ Pg 17 (Rev 12)

OP-MC-EL-EPJ Obj: 5

Student References Provided

2010 MNS SRO NRC Examination QUESTION 22

2522

C

SYS063 K4.01 - DC Electrical Distribution System

nowledge of DC electrical system design feature(s) and/or interlock(s) which provide for the following: (CFR: 41.7)

Manual/automatic transfers of control .....

401-9 Comments:

Remarks/Status
401-9 Comments: No comment. ---------- ---------- Resolution / Comments: N/A

Question 22 References:

	OBJECTIVE	NLO	NLOR	LPRO	LPSO	LOR
1	State the purpose of the 250 VDC Auxiliary Power System.	X	X	X	X	
2	Draw a simplified composite of the 250 VDC Auxiliary Power System (breaker numbers not required) as provided by Training Drawing 7.2, Simplified Drawing-250 VDC Auxiliary Power System.	X	X	X	X	
3	State the duty-cycle requirements associated with the batteries for the 250 VDC Auxiliary Power System	X	X	X	X	X
4	List the typical loads powered by the 250 VDC Auxiliary Power System.	X	X	X	X	
5	Describe the basic operation of the 250 VDC Auxiliary Power System.	X	X	X	X	
6	Given a Limit and/or Precaution, associated with the 250 VDC Auxiliary Power System, discuss its basis and applicability.	X	X	X	X	X

From Lesson Plan OP-MC-EL-EPJ Pg 17 (Rev 12)

During an "equalizing charge", the battery is disconnected from its distribution center and the standby charger performs the charging operation while the normal battery charger supplies the distribution center. Both distribution centers are electrically cross-connected through the bus tie breakers. During this alignment the DC bus (distribution center) must be disconnected due to the high voltage (approx. 271 VDC) and current conditions existing during the charge. The appropriate charging time is determined by the battery condition and the finishing charge parameters. 1(2)DS is equipped with an internal "equalize" timer which is set by IAE. This timer will automatically place 1(2)DS back to "Float" when the timer times out. Once the battery is fully charged, the charger is realigned for normal operation with the standby charger disconnected and the bus tie breakers opened.

Objective # 6

0.0.1. Limits and Precautions

The DC ties will normally remain open. Close only during equalizing charges to batteries, or on loss of battery.

Basis: This ensures the DC channels remain independent of each other and that a fault on one bus (channel) does not affect the other bus (channel).

Do not allow smoking, open flames, or sparks in the battery area.

Basis: Limits the possibility of a fire / explosion due to interaction with hydrogen (a by-product of the electrolytic process of the battery) which could result in damage to equipment vital to the safe operation of the plant.

Ensure Battery Room Ventilation Equipment is in service.

Basis: Limits the possibility of hydrogen building up to potentially explosive or burnable mixtures which could result in damage to equipment vital to the safe operation of the plant.

Distribution Center 1DP and 2DP are the emergency source of power for critical plant equipment and lighting needed for plant shutdown on loss of offsite power (LOOP). De-energizing these Distribution Centers removes that emergency power source.

Basis: If a LOOP should occur with these busses de-energized, many components needed to safely shutdown the plant would not be available.

0.0.2. Operating Procedures

OP/0/A/6350/001C, 250 VDC Auxiliary Power System contains fifteen enclosures which address the following activities:

- Placing a battery charger in-service.
- Removing a battery charger from service.
- Performing an equalizing charge on a battery.
- Removing a battery from service.

From Lesson Plan OP-MC-EL-EPJ Pg 17 (Rev 12)

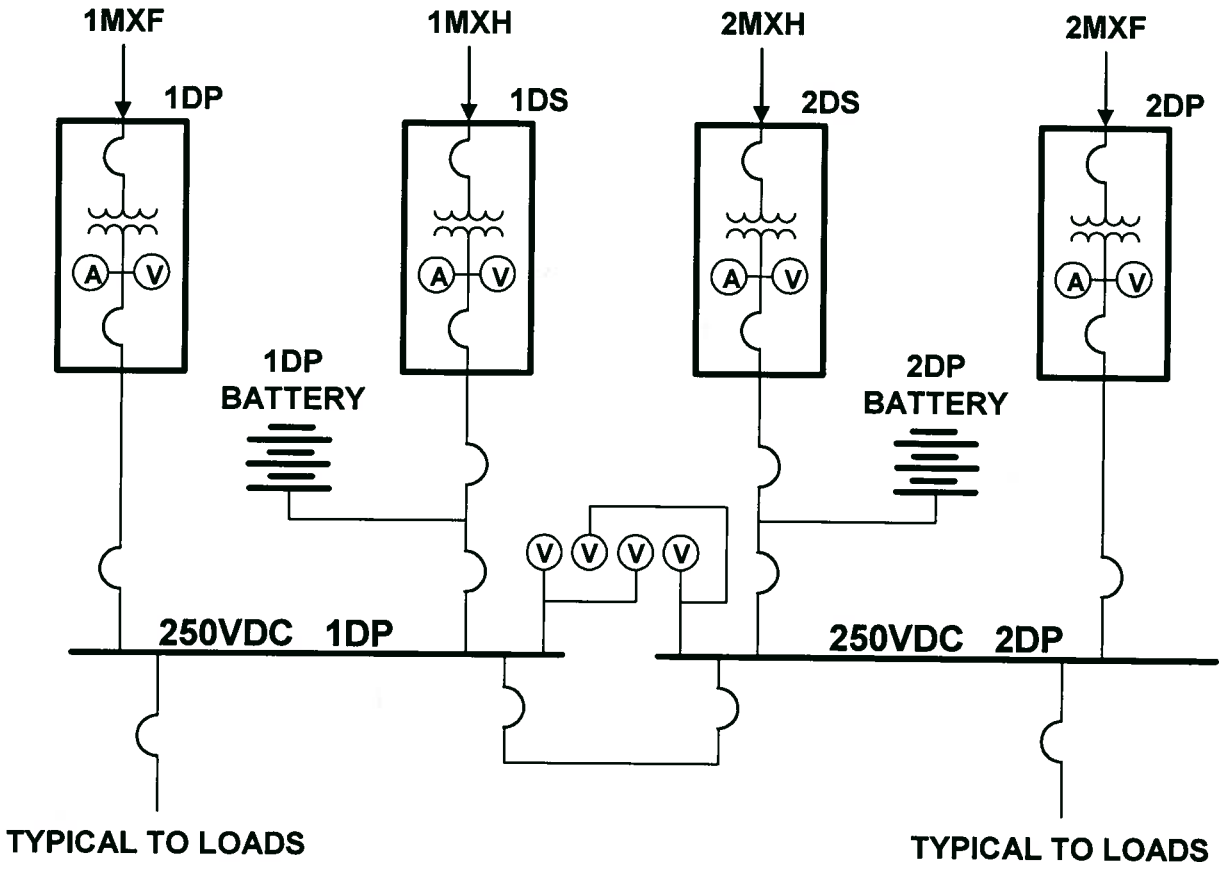

1DP/2DP LOADS

1. TURBINE B/U VAPOR EXTRACTOR
2. GROUND AND UV DETECTORS
3. TURBINE EMER. BRG. OIL PUMP
4. GEN. AIR SIDE SEAL OIL B/U PUMP
5. FWPT "A" EMER. OIL PUMP
6. FWPT "B" EMER. OIL PUMP
7. DLA (SERV. BLDG., CR, EQUIP. ROOM)
8. DLB (AUX. BLDG. D/G ROOM)
9. DLC (TURB. BLDG.)
10. DLD (RX BLDG.)
11. DLE (ADMIN. BLDG.)(1DP ONLY)

Parent Question MNS Bank

ELEPJ007
1 Pt

Initial Conditions:

- Both Units at 100% power.
- All controls in AUTO.
- All electrical busses aligned to their normal supplies except as follows:
  - 250 VDC Auxiliary Supply Battery 1DP is aligned for equalizing charge.

Problem:
The Standby Charger (1DS) DC Output Breaker has tripped open due to a Charger internal fault.

Which ONE of the following describes the current supply to 250 VDC Bus 1DP?

A. Chargers 1DP and 2DP will be supplying the bus.

B. Charger 1DP will be the sole supply to the bus.

C. Charger 1DP and Battery 1DP will be supplying the bus.

D. Bus 1DP will be de-energized.

Answer A

SYS064 A4.08 - Emergency Diesel Generator (ED/G) System
bility to manually operate and/or monitor in the control room: (CFR: 41.7 / 45.5 to 45.8)
pening of the ring bus .....

Given the following:

- Unit 1 is shutdown in MODE 3
- Auxiliary Transformer 1ATA is tagged out for repairs
- All unit loads are being supplied by Auxiliary Transformer 1ATB

1. A Blackout will occur if _____ open.

2. The DG _____ Sequence is ONLY enabled if emergency bus minimum voltage and frequency setpoints are met.

Which ONE (1) of the following completes the statements above?

A. 1. PCBs 8 & 9
   2. Committed

B. 1. PCBs 11 & 12
   2. Committed

C. 1. PCBs 8 & 9
   2. Accelerated

D. 1. PCBs 11 & 12
   2. Accelerated

General Discussion

Since one busline is already out, loss of the other busline which feeds 1ATB will result in a Blackout on both 4160V busses. The busline which feeds 1ATB is fed from the switchyard via PCB 11 & 12.

When bus voltage is greater than or equal to 92.5% and D/G speed is greater than or equal to 97%, the accelerated sequence is enabled. Blackout loads will be sequentially applied at intervals of approximately 2 seconds, as long as bus voltage remains greater than or equal to 92.5% and frequency remains > 58.2 Hz. Complete loading of all blackout loads, via the accelerated sequence, could be done in as little as 25 seconds.

Should the Accelerated Sequence Relay scheme fail to work, the Committed Sequence would be actuated approximately 10 seconds after the diesel receives its blackout start signal if load shed of the bus has been completed. The committed sequence may take up to 12 minutes to load all blackout loads. The committed sequence does not require any minimum voltage or minimum frequency to allow it to progress as does the Accelerated Sequence. The Committed Sequence is required by Technical Specifications.

Answer A Discussion

INCORRECT: See explanation above.

PLAUSIBLE: Part 1 is plausible if the applicant does not recall which breakers feed which busline.

Part 2 is plausible if the applicant does not recall the difference between the .Accerated and Committed start sequences.

Answer B Discussion

INCORRECT: See explanation above.

PLAUSIBLE: Part 1 is correct.

Part 2 is plausible if the applicant does not recall the difference between the .Accerated and Committed start sequences.

Answer C Discussion

INCORRECT: See explanation above.

PLAUSIBLE: Part 1 is plausible if the applicant does not recall which breakers feed which busline.

Part 2 is correct.

Answer D Discussion

CORRECT. See explanation above.

Basis for meeting the KA

"Opening of the ring bus" equates to a loss of or malfunction in the switchyard. In this case the opening of the ring bus is the opening of Switchyard PCBs 11 & 12 which results in a Blackout on 1ETA and 1ETB. The ability to monitor portion of the KA related to opening of the ring bus and the Emergency Diesel Generator system is met by the applicant demonstrating a knowledge of how the EDGs operate under these conditions.

Basis for Hi Cog

Basis for SRO only

Job Level	Cognitive Level	QuestionType	Question Source
RO	Memory	NEW	

Development References

Lesson Plan OP-MC-DG-EQB Pg 2 (Rev 16)

OP-MC-DG-DG OBJ. #5

Student References Provided

YS064 A4.08 - Emergency Diesel Generator (ED/G) System
Ability to manually operate and/or monitor in the control room: (CFR: 41.7 / 45.5 to 45.8)
Opening of the ring bus .....

QUESTION 23 2523 D

401-9 Comments:

Remarks/Status

401-9 Comments:

An SI has not occurred. In order to give "starting the EDG in priority mode" some credibility, can you state in another bullet that "SI has NOT been reset" (because one has not occurred but the applicant will have to figure that out)?
This will lend B2 and C2 additional credibility or put something in the stem that might indicate an SI might have occurred but didn't.
This Q is E because of 2 weak distracters..

Resolution / Comments:

Don't feel that there's a way to add the SI angle and maintain plausibility. Actually, two validators have picked B. Wrote a potential replacement question that asks the applicant to differentiate between the Commited and Accelerated Sequences.

Question 23 References:

	OBJECTIVE	NLO	NLOR	LPRO	LPSO	LOR
1	State the purpose of the Diesel Generator Load Sequencing System.	X	X	X	X	
2	List the Sequencer Automatic Actuation Signals.	X	X	X	X	X
3	List the two Sequencer Modes of Operation and give a brief explanation of each mode.	X	X	X	X	X
4	State which of the Sequencer Modes has priority.	X	X	X	X	X
5	Describe the sequence of events which occur during the Blackout Mode of Sequencer Operation.			X	X	X
6	Describe the sequence of events which occur during the Safety Injection Mode of Sequencer Operation.			X	X	X
7	Describe the sequence of events which occur during a Blackout followed by a Safety Injection.			X	X	X
8	Describe the sequence of events which occur during a Safety Injection Actuation followed by a Blackout. (NOTE: with S_s reset and with S_s not reset).			X	X	X
9	Describe the sequence of events required to be done in order to return the 4.16 KV bus back to normal following a: • Safety Injection • Blackout • Safety Injection followed by a Blackout • Blackout followed by a Safety Injection			X	X	X
10	Given a Limit and/or Precaution associated with an operating procedure, discuss its bases and when the it applies.	X	X	X	X	X

From Lesson Plan OP-MC-DG-EQB

Should a Safety Injection signal occur at any time after the first time delay relay completes its cycle, the circuit will automatically initiate separation from the offsite power source and transfer to the emergency diesel generators.

Protection for a severe diesel-generator overload accompanied by a system voltage dip caused by events such as a Loss of Off-Site Power (LOOP) with the Diesel Generator operating in parallel with the grid is provided by the voltage-controlled overcurrent relay (51V). This relay consists of three single phase relays (51VX, 51VY, and 51VZ). The operation of any one of these phase relays will activate an annunciator alarm in the control room (AD-11, A-4 (D-4), D/G A (B) Overcurrent) to warn the operator of an overload condition (800 amps @ 3360 volts). Operation of any two of these overcurrent relays will result in operation of the diesel-generator lockout relay (86D). Diesel-generator lockout relay (86D) will trip and lockout the diesel-generator switchgear breaker and initiate a shutdown of the diesel-generator. This lockout must be reset by hand before the breaker can be reclosed.

3.3 Sequencer operation during a Blackout

Objective # 5

Sequencer operation during a Blackout with no safety injection signal and the under-voltage is not due to fault relay 86N, 86S or 86B.

If 2/3 LOV Relays sense a loss of voltage on their associated 4160V bus, the blackout relay will pick up and actuate a D/G start. If the UV condition still exists after 8.5 seconds, the blackout logic is sealed in. All 4160V breakers on the bus are then tripped open. When D/G speed is ≥ 95%, the output breaker will close. When bus voltage is ≥ 92.5% and D/G speed is ≥ 97%, the accelerated sequence is enabled. Blackout loads will be sequentially applied at intervals of approximately 2 seconds, as long as bus voltage remains ≥ 92.5% and frequency remains > 58.2 Hz. Complete loading of all blackout loads, via the accelerated sequence, could be done in as little as 25 seconds. If during the sequencing of blackout loads the Sequencer RESET pushbuttons are depressed, no additional sequencing will occur. This is because once the RESET pushbuttons are depressed, the blackout signal is removed and since there is power on the 4160V bus a blackout no longer exists. It would require another blackout signal or manual loading of the bus to complete the sequencing of loads.

Should the Accelerated Sequence Relay scheme fail to work, the Committed Sequence would be actuated approximately 10 seconds after the diesel receives its blackout start signal if load shed of the bus has been completed. The committed sequence may take up to 12 minutes to load all blackout loads. The committed sequence does not require any minimum voltage or minimum frequency to allow it to progress as does the Accelerated Sequence. The Committed Sequence is required by Technical Specifications.

SYS073 K1.01 - Process Radiation Monitoring (PRM) System

nowledge of the physical connections and/or cause-effect relationships between the PRM system and the following systems: (CFR: 41.2 to 41.9 / 45.7 to 45.8)

Those systems served by PRMs .....

Which ONE (1) of the following lists the EMFs that will automatically stop the Auxiliary Building Unfiltered Exhaust Fans (1ABFXF-1A/1B) on a Trip 2 alarm?

A. 1EMF 36(L) Unit Vent Gas (Low Range) OR
1EMF 36(H) Unit Vent Gas (High Range)

B. 1EMF 36(L) Unit Vent Gas (Low Range) OR
1EMF 37 Unit Vent Iodine

C. 1EMF 35(L) Unit Vent Particulate (Low Range) OR
1EMF 37 Unit Vent Iodine

D. 1EMF 35(L) Unit Vent Particulate (Low Range) OR
1EMF 36(H) Unit Vent Gas (High Range)

General Discussion

The automatic actions for the Unit Vent EMFs are as follows:
1) A Trip 2 high radiation alarm on 1EMF 35 (L), 1EMF 37, 2EMF 35 (L), or 2EMF 37 will stop Auxiliary Building Unfiltered Exhaust Fans 1ABFXF-1A, 1ABFXF-1B, 2ABFXF-1A, and 2ABFXF-2B.
2) A Trip 2 high radiation alarm on 1EMF 36 (L) will close 1WG160 to terminate waste gas discharge.
3) 1EMF 36 (L) will also alarm and indicate at the Waste Gas Processing Panel.

Answer A Discussion

INCORRECT: See explanation above.

PLAUSIBLE: This answer is plausible because both EMFs monitor the Unit Vent and both have automatic actions (1EMF 36(L) closes 1WG160 and 1EMF 36(H) stops the sample pump).

Answer B Discussion

INCORRECT: See explanation above.

PLAUSIBLE: This answer is plausible because 1EMF 37 is correct and 1EMF 36(L) monitors the Unit Vent and has automatic actions (closes 1WG160).

Answer C Discussion

CORRECT: See explanation above.

Answer D Discussion

INCORRECT: See explanation above.

PLAUSIBLE: This answer is plausible because 1EMF 35(L) is correct and 1EMF 36(H) monitors the Unit Vent and has automatic actions (stops the sample pump on a Trip 1 alarm).

Basis for meeting the KA

The KA is matched because the applicant must know the automatic actions (cause-effect relationship) that occur on a Trip 2 alarm for the EMFs at monitor the Unit Vent.

Basis for Hi Cog

Basis for SRO only

Job Level	Cognitive Level	QuestionType	Question Source
RO	Memory	NEW	

Development References

Lesson Plan OP-MC-WE-EMF Section 2.1.4

Student References Provided

SYS073 K1.01 - Process Radiation Monitoring (PRM) System
Knowledge of the physical connections and/or cause-effect relationships between the PRM system and the following systems: (CFR: 41.2 to 41.9 / 45.7 to 45.8)
Those systems served by PRMs .....

401-9 Comments:

Remarks/Status

401-9 Comments:

It would appear from the reference that B is also a correct answer since since 1EMF 36(L) and 1 EMF37 are both called out as tripping mechanisms. The reference does NOT discern between particulate or gas.
The Q is U until facility re-verifies because of 2 potentially correct answers.

QUESTION 24 2524 C

Resolution / Comments:

A Trip 2 alarm on 1EMF 36(L) will ONLY close 1WG160. It will NOT stop the Auxiliary Building Unfiltered Exhaust Fans. Likewise, a Trip 2 alarm on 1EMF 35(L) or 1 EMF 37 will ONLY stop the Auxiliary Building Unfiltered Exhaust Fans. It will NOT close 1WG160. They are two separate actions from different EMFs. Therefore "B" cannot be correct because 1EMF 36(L) will not stop the Auxiliary Building Unfiltered Exhaust Fans.

Question 24 References:

From Lesson Plan OP-MC-WE-EMF Section 2.1.4:

The purpose of the auto actions:

- **EMF34 effluent is directed to ground water drainage sump "A", therefore isolating this flowpath prevents contaminating this sump.**
- **S/G blowdown blowoff tank effluent may be directed to either the condensate system or the turbine building sump, isolating blowdown will prevent contaminating these systems via the blowdown pathway.**
- **Conventional sampling effluent may be directed to the CST or turbine building sump, isolating conventional sampling will prevent contaminating these systems via this pathway.**

These channels use dual range gamma liquid assembly. The low range uses a gamma liquid (NaI Scint) while the high range uses a GM detector.

2.1.4 Unit Vent Airborne Monitor

The following channels are used to monitor the unit vent:

- 1(2) EMF 35 (L) Unit 1(2) Unit Vent Particulate (Low Range)
- 1(2) EMF 36 (L) Unit 1(2) Unit Vent Gas (Low Range)
- 1(2) EMF 36 (H) Unit 1(2) Unit Vent Gas (High Range)
- 1(2) EMF 37 Unit 1(2) Unit Vent Iodine

Objective # 2

These EMFs, utilize a sample probe located within the Unit Vent to monitor, record, and alarm the gaseous, iodine and air particulate activity levels released to the atmosphere from the combined ventilation systems within the station.

Atmosphere from the Containment Purge, Containment Annulus Ventilation, Auxiliary Building Ventilation, Condenser Air Ejector, Fuel Pool Ventilation and other potentially radioactive systems are discharged through the Unit Vent.

Objective # 2, 3

The automatic actions for these EMFs are as follows:

- **A Trip 2 high radiation alarm on 1EMF 35 (L), 1EMF 37, 2EMF 35 (L), or 2EMF 37 will stop Auxiliary Building Unfiltered Exhaust Fans 1ABFXF-1A, 1ABFXF-1B, 2ABFXF-1A, and 2ABFXF-2B.**
- **A Trip 2 high radiation alarm on 1EMF 36 (L) will close 1WG160 to terminate waste gas discharge.**
- **1EMF 36 (L) will also alarm and indicate at the Waste Gas Processing Panel.**

SYS076 K3.07 - Service Water System (SWS)
Knowledge of the effect that a loss or malfunction of the SWS will have on the following: (CFR: 41.7 / 45.6)
ESF loads .....

Which ONE (1) of the following is an effect if flow is lost to the Nuclear Service Water System Essential Header? (Assume the equipment listed is in service)

A. PD pump bearing oil temperature increases.

B. NC Pump motor bearing temperature increases.

C. MD CA Pump motor bearing temperature increases.

D. Steam Generator Blowdown Heat Exchanger outlet temperature increases.

General Discussion

The MD CA Pump motor cooler is one of the loads supplied by the RN Essential Header.

Answer A Discussion

INCORRECT: See explanation above.

PLAUSIBLE: This answer is plausible if the applicant confuses the PD pump bearing oil cooler with the NV pump bearing oil coolers which are supplied from the RN Essential Header.

Answer B Discussion

INCORRECT: See explanation above.

PLAUSIBLE: This answer is plausible because the NC Pump motor coolers are supplied with RN except it is from the Non-Essential Headers. It is also plausible that the applicant may believe the NC Pump motor coolers to be an Essential Header load since on an SI the RN supply to all Non-Essential loads is isolated with the exception of the NC Pump Motor coolers.

Answer C Discussion

CORRECT: See explanation above.

Answer D Discussion

INCORRECT: See explanation above.

PLAUSIBLE: This answer is plausible because the SGBD HXs are supplied by RN except they were are supplied by the Non-Essential Header.

Basis for meeting the KA

The KA is matched because the applicant must know the ESF loads that are supplied by Nuclear Service Water to correctly answer the question.

Basis for Hi Cog

Basis for SRO only

Job Level	Cognitive Level	QuestionType	Question Source
RO	Memory	BANK	MNS Exam Bank Question #PSSRN021

Development References

Lesson Plan OP-MC-PSS-RN Section 2.4 and 3.2.3
Learning Objective OP-MC-PSS-RN #10

Student References Provided

SYS076 K3.07 - Service Water System (SWS)
Knowledge of the effect that a loss or malfunction of the SWS will have on the following: (CFR: 41.7 / 45.6)
ESF loads .....

401-9 Comments:

Remarks/Status

401-9 Comments:

No comment.

Resolution / Comments:

N/A

Question 25 References:

From Lesson Plan OP-MC-PSS-RN Section 2.4:

2.4 Supply Headers

Objective # 8, 10

The RN system provides flow to the following **headers**:

- "A" and "B" essential headers
- Reactor building Non-essential headers
- Auxiliary Building Non- essential headers

There is one redundant **essential header** for each train. These headers contain the equipment and component essential for safe shutdown of the plant. (**Refer to Drawing 7.4 and 7.6**). The following loads are supplied by the essential header. Included in this listing is whether these components are supplied on S_S , BO or S_P:

LOADS	S_S BO	*S_P
1) Pump motor coolers/AHU		
• Component Cooling Pump motor (KC)	X	X
• Centrifugal Charging Pump motor (NV)	X	X
• Safety Injection Pump motor (NI)	X	
• Residual Heat Removal Pump motor (ND)	X	
• Containment Spray Pump motor (NS)	X	
• Fuel Pool Cooling Pump motor (KF)	X	X
• Nuclear Service Water Pump motor (RN)	X	X
• Auxiliary Feedwater Pump (CA)	X	X
2) Heat exchangers:		
• Containment Spray (NS)		X
• Component Cooling (KC)	X	X
• Diesel Generator Engine Cooling (KD)	X	X
• D/G Starting Air Compressor After Cooler	X	X
• Control, Cable and Equip Room A/C Cond (YC)	X	X
3) Oil coolers :		
• Centrifugal Charging Pump Bearing (NV)	X	X
• Centrifugal Charging Pump Gear (NV)	X	X
• Safety Injection Pump Bearing (NI)	X	

* Note: If an S_P is present you will also have had an S_S. The S_P column only shows the additional loads which would be served when the S_P occurs.

4) Supplies assured makeup for the following systems:

* Auxiliary Feedwater (CA)
  * Component Cooling (KC)
  * Spent Fuel Pool Cooling (KF)
  * Diesel Generator Cooling (KD)

The RN return from the NS heat exchangers is monitored for radioactivity by EMF-45A & B to detect tube leakage. The NS heat exchangers have a wet lay-up loop associated with the shellside (RN) of the heat exchanger **(Refer to Drawing 7.7)**. This wet lay-up loop was added to help reduce corrosion buildup on the shellside of the HX. The 2B NS heat exchanger wet lay up loop is on the tube (RN) side of the heat exchanger. This system is non-safety related and in case of a break in the system there are flow limiting orifices on the suction and discharge sides. This system is primarily the responsibility of the Chemistry Dept. with the exception of the isolation valves directly off the RN piping which will be Operations. The wet lay up system will normally be in service with the isolation valves open and the heat exchanger water solid. The recirc pump will be run for sampling purposes and chemical additions as necessary.

The RN **Reactor Building non-essential header** is not redundant and is isolated on an S_P (Phase B) signal, when it is being supplied from the 'A' RN header. If 'B' train is supplying the header, flow will be lost to the NCP coolers on a BO or SS. This header contains the NCP motor coolers **(Refer to Drawing 7.6)**. Loss of RN to the NCP motor cooler(s) requires the operator to trip the effected NCP(s).

Objective # 11

The RN **Auxiliary Building non-essential header** is not redundant and is isolated on an S_S signal. The components supplied by this header are: **(refer to Drawing 7.6)**

* Reciprocating Charging Pump Bearing oil cooler
* Reciprocating Charging Pump Fluid Drive oil cooler

Note: The Steam Generator Blowdown Heat Exchanger has been flanged out and "abandoned in place" for Unit #1 (NSM 12430) and Unit #2 (NSM 22430).

Due to both units alignment to the RL Header, a cross-tie is created between the units through a 6 inch line. **(Refer to drawing 7.4)**

The reason that the Auxiliary Building non-essential header supply isolation valve (RN42) is **NOT** closed during a Blackout is to allow "A" RN pump supply the Reactor Building ventilation units **(refer to Drawing 7.11)**. The "A" RN pump will have a greater NPSH since it will be supplied by the LLI. Also it is likely under Blackout conditions the RV pumps will not have power.

Due to fouling problems and repeated maintenance on the PD pump heat exchanger a decision was made to isolate the Aux. Bldg. non-essential header. As a result the normal position of 1RN-64 will be closed. When it is necessary to start/stop the PD pump 1RN -64 will be opened/closed per the NV procedure.

From Lesson Plan OP-MC-PSS-RN Section 3.2.3:

3.2.3 Safety Injection Alignment

On receipt of a **Safety Injection signal** basically the same automatic actuation occurs as after a blackout. The exceptions are that the supply to all nonessential equipment except the NC pump motor coolers and crossovers between essential trains are isolated. The "A" RN pump supplies Reactor Building non-essential header. The RV pumps will start automatically and supply the containment ventilation units if a blackout does not occur concurrently with the LOCA. **Drawings 7.14 and 7.15** provides the flow path for a unit safety injection.

NOTE: An S_S signal will affect both units suction, discharge and AB non-essential headers. Refer to Drawing 7.14

On receipt of a **Phase B isolation signal (S_P)** the RV pump suction is isolated to conserve water. The containment isolation valves close to isolate the NC pump motor coolers. All nonessential supply is isolated providing double isolation at this time between all essential and nonessential equipment. The NS heat exchanger inlet isolation valve is opened from the control room when required. During all modes of operation, water is available for assured makeup. **Drawings 7.16** provides the flow path following a unit safety injection with a phase B signal.

4.0 TECHNICAL SPECIFICATIONS

Objective # 17

4.1 Tech Spec 3.7.7 Nuclear Service Water System (NSWS)

4.2 Tech Spec 3.7.8 Standby Nuclear Service Water Pond (SNSWP)

PARENT QUESTION:

PSSRN021

1 Pt Which of the following is a Nuclear Service Water System essential header load?

A. Steam generator blowdown heat exchanger.

B. Auxiliary feedwater pump motor cooler.

C. Reactor coolant pump motor winding cooler.

D. Positive displacement pump bearing oil cooler.

Answer 115

B
PSS-RN, section 2.4
Objective 10

SYS078 A4.01 - Instrument Air System (IAS)
bility to manually operate and/or monitor in the control room: (CFR: 41.7 / 45.5 to 45.8)
Pressure gauges .....

Due to a leak on the VI system the following indications were observed:

- 1AD-12 C1 (VI/VS Lo Pressure) is LIT
- 0VIP-5090 (VI/VS Press) dropped to a lowest reading of 86 PSIG and is now 89 PSIG and increasing

Which ONE (1) of the following describes automatic actions which have occurred as a result of the indicated pressure transient?

A. G and H VI Compressors auto-started ONLY.

B. 1VI-820 (VI to VS Supply) auto-closed ONLY.

C. 1VI-820 auto-closed AND 1VI-1812 (VI Dryer Bypass Vlv) has auto-opened.

D. G and H VI Compressors auto-started AND 1VI-820 (VI to VS Supply) auto-closed.

General Discussion

At a decreasing VI pressure of 90 PSIG the following actions occur:
1VI-820 (VI to VS Supply) Auto closes
G and H Compressors (Diesel VI compressors) Auto Start
If VI pressure continues to decrease to 85 PSIG, 1VI-1812 (VI Dryer Bypass) will OPEN.

Answer A Discussion

INCORRECT: See explanation above.

PLAUSIBLE: This answer is plausible because this action would have occurred but is not complete. Answer is incomplete and incorrect due to the ONLY designation.

Answer B Discussion

INCORRECT: See explanation above.

PLAUSIBLE: This answer is plausible because this action would have occurred but is not complete. Answer is not complete and is incorrect due to the ONLY designation.

Answer C Discussion

INCORRECT: See explanation above.

PLAUSIBLE: This answer is plausible because the applicant may conclude that 1VI-1812 actuates with the other components at 90 PSIG. The first part is correct.

Answer D Discussion

CORRECT: See explanation above.

Basis for meeting the KA

KA is matched because the candidate, given information obtained from monitoring a trend of VI pressure indications located in the control room, what automatic actions have occurred associated with the Instrument Air system.

Basis for Hi Cog

This is an analysis level question because the applicant must evaluate a given set of plant conditions, must recall a setpoint from memory, and then compare the plant conditions to the recalled memory to eliminate distracters and determine if a set of automatic actions should have occurred.

Basis for SRO only

Job Level	Cognitive Level	QuestionType	Question Source
RO	Comprehension	BANK	MNS (Bank 2227)

Development References

Lesson Plan OP-MC-SS-VI Objective 7 Section 1.2.10 page 67 and Objective 2 Section 1.3.1 page 89

ARP for 1AD-12 C1 (VI/VS Low pressure)

Student References Provided

SYS078 A4.01 - Instrument Air System (IAS)
Ability to manually operate and/or monitor in the control room: (CFR: 41.7 / 45.5 to 45.8)
Pressure gauges .....

401-9 Comments:

Remarks/Status

401-9 Comments:

No comment.

Resolution / Comments:

N/A

Question 26 References:

	OBJECTIVE	NLO	NLOR	LPRO	LPSO	LOR
6	Explain the control function associated with each of the following VI Air Compressor (A, B, and C) pushbuttons: • Start/Stop pushbutton • Reset pushbutton	X	X	X	X	
7	List the interlocks / trips associated with operation of the following plant air system components: • VI Air Compressors • VI-820 (VI to VS Supply Valve) • VS Low Pressure Air Compressor • VB Air Compressor	X	X	X	X	X
8	Describe the following controls and/or indications associated with operation of VI Air Compressors D, E, and F: • On/Off switch and indication • Start/Stop pushbuttons • Pre-lube pump status • Acknowledge/Reset pushbutton	X	X	X	X	
9	Describe how the following VI System components function to provide a continuous supply of clean dry air: • Service Building Air Receiver Tanks (and drains) • Air Dryers • Auxiliary Building Instrument Air Tanks	X	X	X	X	
10	Explain each one of the following controls and /or indications, associated with the Breathing Air Compressors: • Start/Stop Pushbutton • "Power ON" Light • "RUN" Light • Discharge Air Over-Temperature Light • Rotor Oil Filter Service Light • Bearing Oil Filter Service Light • Air/Oil Separator Service Light • Service Air Filter ΔP Gauge • Purification Filter ΔP Gauge • Rotor Coolant Temperature Gauge • Discharge Air Pressure Gauge • Discharge Air Temperature Gauge	X	X	X	X	
11	Describe normal operation of the Breathing Air	X	X	X	X	X

	Compressor(s).					

From Lesson Plan OP-MC-SS-VI Pg 71 (Rev 33)

The VI System normally supplies the Low Pressure VS System through control valve 1VI-820.

Controls and indication for 1VI-820 are located at the VI Sequencer Control Panel. The valve control switch is a three position switch:

- Close
    - Auto
    - Open

Objective # 7

Indication provided at the VI Sequencer Control Panel consists of the following:

- 1VI-820 Close (green light)
- 1VI-820 Open (red light)

This valve is normally in the AUTO position and will automatically close should VI System Pressure decrease to <90 psig. Upon valve closure 1VI-820 can be reopened once VI System Pressure has increased >90 psig by placing the valve to the OPEN position. After opening the valve 1VI-820, the switch should be returned to the AUTO position. If not, the valve will reopen without operator action, after closure, as soon as pressure has increased above 90 psig.

1.2.13 VI System Air Dryers A, B, and C

Objective # 9

VI Dryers A, B, and C (AMLOC-CHA Dryers) are fully automatic, desiccant-type air dryers designed to remove vaporous moisture from the Instrument Air System. Generally, two of the three desiccant air dryers (A, B, and C) are in-service while one remains in standby, ready and available for service when needed. Each in-service dryer will alternately cycle air through one of the two desiccant chambers for moisture removal, while the other chamber is regenerated (removal of previously adsorbed moisture) and re-pressurized.

From Lesson Plan OP-MC-SS-VI Pg 75 (Rev 33)

Purge Dump Restrictor

Closes during dump and limits gas flow to prevent fluidization by controlling the rate of depressurization. Opens fully during all other periods.

Dryer System Bypass Valve

1VI-1812 is installed between the Dryer System Manual Bypass Valves 1VI-093 and 1VI-094. This valve is designed to fail open on a loss of power or loss of air. Valves 1VI-093 and 1VI-094 will be normally open while 1VI1812 will be normally closed. A solenoid operator associated with valve 1VI-1812 is connected to pressure switch 0VIPS5381. The solenoid is set to vent the actuator upon receipt of a VI System Low Pressure signal (85#). The pressure switch 0VIPS5381 is connected to the instrument loop 0VIPS5380, which currently controls the dryer Purge Exhaust Isolation Valves (1VI-1838, 1VI-1839, and 1VI-1840) which fail closed on a low pressure signal. 0VIPS5381 sends a signal to the REFLASH Panel such that an alarm in the Control Room will indicate a VI Dryer Panel Trouble. There is local indication of valve position, RESET and OVERRIDE capabilities provided at the Reflash Panel. By depressing RESET, 1VI-1812 will close, and by depressing OVERRIDE, 1VI-1812 can be manually opened.

1VI-1812 is designed to automatically open and bypass the VI Dryers in the event of sudden blockage of flow due to some dryer malfunction. The PRA Study identified VI Dryer malfunctions as a primary contributor to Loss of VI event probability. The manual bypass valves (1VI-093 and 1VI-094) cannot protect against sudden dryer flow blockage events (e. g. switching valve failure). A filter is installed at the inlet of 1VI-1812 to prevent the potential of substantial contamination of the normally dry VI headers with rust known to exist in the wet VI headers.

Instruments and Their Basic Function

The A, B, and C VI Dryers are equipped with a set of gauges to indicate inlet air pressure, outlet air pressure, purge flow, and chamber pressure. The gauges are provided to monitor system operation. The gauges on the chamber indicate which chamber is on-stream (the gauge on the off-stream chamber should indicate zero (0) PSIG). The gauges are also used to verify that the internal pressure has been completely vented to the atmosphere when servicing is required. **All pressure gauges should indicate zero (0) PSIG before any service work is performed on the dryer.**

Additional instruments include:

- **Chamber pressure relief valves.**

Provide chamber protection if high pressure should develop during dryer operation. Set to relieve at design pressure.

- **Chamber Pressure Sensors**

Set to sense the lack or presence of chamber pressure following repressurization or depressurization.

From Lesson Plan OP-MC-SS-VI Pg 67 (Rev 33)

Objective # 4

The Diesel VI Compressors operate in two modes of operation. These modes are Automatic and Manual. In the Manual Mode of operation, an operator will start and run the compressor using controls on the compressor control panel located at the compressors themselves. For a manual start of the compressor to be accomplished, the following must be true:

- The AUTO/OFF-RESET switch must be selected to the OFF-RESET position
- The START/WARM-UP/RUN switch is in the WARM-UP Position
- The HIGH/LOW switch is selected to the desired position (normally HIGH)

The operator then rotates the Engine Switch from the OFF position to the ON position and the compressor should start. Once the compressor has started and has warmed up, the operator can select the RUN position on the START/WARM-UP/RUN selector switch to allow the compressor to load. If the operator is starting the compressor as directed from the Loss of Instrument Air System Abnormal Procedure, the AP directs the operator to leave the START/WARM-UP/RUN switch in the RUN position to allow for immediate loading.

The following is a set of conditions, which will allow the Diesel VI Compressors to automatically start:

- The AUTO/OFF-RESET switch must be selected to AUTO
- The START/WARM-UP/RUN switch is selected to RUN
- The HIGH/LOW switch is selected to HIGH
- The Latching Relay picks up

The compressor will automatically start and load to the desired pressure.

Objective # 7

There are three signals, which will send an AUTO START signal to the Diesel Powered VI Compressors. These signals are:

- Loss of VI header pressure as measured by 0VIPS5070
  - set at 90 psig decreasing
  - Compressor control can be regained when pressure increases above 95 psig
- Loss of 3/3 KR flow to the D, E, and F VI Compressors
- Loss of power to the VI Sequencer Panel (SKU#43) 1SLXD/2SLXD-SMXU

MNS Bank Question 2227:

Due to a leak on the VI system the Unit 1 OATC observes the following indications:

- 1AD-12 C1 (VI/VS Lo Pressure) is LIT
- 0VIP-5090 (VI/VS Press) dropped to a lowest reading of 86 PSIG and is now 89 PSIG and increasing

Which ONE (1) of the following describes automatic actions which have occurred as a result of the indicated pressure transient?

A. G and H VI Compressors Auto Started ONLY

B. 1VI-820 (VI to VS Supply) Auto Closed ONLY

C. 1VI-820 Auto Closed AND 1VI-1812 (VI Dryer Bypass Vlv) has Auto Opened

D. G and H VI Compressors Auto Started AND 1VI-820 (VI to VS Supply) Auto Closed

---

ANSWER: D

SYS078 K3.02 - Instrument Air System (IAS)
Knowledge of the effect that a loss or malfunction of the IAS will have on the following: (CFR: 41.7 / 45.6)
Systems having pneumatic valves and controls .....

Given the following:

- Unit 1 is operating at 100% RTP when a loss of VI event occurs
- AP-22 (Loss of VI) has been implemented
- VI header pressure is 55 PSIG and decreasing

Which ONE (1) of the following system effects would be the FIRST to require the crew to trip the reactor in accordance with AP-22?

A. Decreasing S/G levels

B. Loss of RN supply to Containment

C. Loss of NC pump seal leakoff to the VCT

D. PZR level approaching the High Level Trip setpoint

General Discussion

The CF control valves use 0 - 60# valve operating air. Depending on the nature of the problem with VI and considering line losses, etc., these valves could start failing at 70# or more VI pressure as indicated in the control room. The operating philosophy regarding loss of Main Feedwater at power is to trip the reactor. This will prevent challenging the Lo-Lo S/G automatic reactor trip and will result in better initial conditions at the time of the manual trip. If the CF valves were to get to less than 25% open (for 30 sec or more) on 3 out of 4 S/Gs, an AMSAC could also be generated. For most scenarios, it's likely the operator will have manually tripped the reactor prior to this occurring.

Answer A Discussion

CORRECT: See explanation above.

Answer B Discussion

INCORRECT: See explanation above.

PLAUSIBLE: 1RN-252B does fail closed which would result in a loss of NSW cooling to the U-1 NCP's. This is a significant operational concern and left in this condition would result in the need to trip the reactor and secure the NCP's. It is therefore plausible but incorrect because this condition would not be an immediate threat.

Answer C Discussion

INCORRECT: See explanation above.

PLAUSIBLE: 1NV-34A fails open but if the applicant believes that the failure mode of this valve is closed this would result in a loss of D/P across the A NCP #1 seal and require an immediate reactor trip and pump shutdown.

Answer D Discussion

INCORRECT: See explanation above.

PLAUSIBLE: 1NV-238 does fail open which would result in maximum charging flow. This would represent a longer term operational concern but would eventually result is challenging the PZR high level trip setpoint and is therefore plausible.

Basis for meeting the KA

This K/A is address because the applicant must understand the effect of a Loss of VI will have on 4 different pneumatic valves and how this loss would affect the systems containing these components.

Basis for Hi Cog

This is a hi cog question because it involves a level of analysis of given situation, apply system knowledge and predict an outcome.

Basis for SRO only

Job Level	Cognitive Level	QuestionType	Question Source
RO	Comprehension	BANK	MNS Exam Bank Question AP22N01

Development References

AP-22 (Rev 28) Enc 12
AP-22 (Rev 28) Page 8
AP-22 Bacdground Document Page 15

OP-MC-AP-22 Obj. 5

Student References Provided

SYS078 K3.02 - Instrument Air System (IAS)
Knowledge of the effect that a loss or malfunction of the IAS will have on the following: (CFR: 41.7 / 45.6)
Systems having pneumatic valves and controls .....

401-9 Comments:

Remarks/Status

401-9 Comments:

Distractor D is a long shot and I do not believe it is plausible especially since other, more pronounced reactor trip criteria exists. Consider replacing distractor D.
D is NP.

QUESTION 27 2527 A

Resolution / Comments:

Distracter D is not the strongest distracter. However, it is possible and is therefore plausible. Would like to keep this one.

Question 27 References:

OP-MC-AP-22 Obj. 5

OBJECTIVES

	OBJECTIVE	NLO	NLOR	LPRO	LPSO	LOR
1	Concerning AP/1/A/5500/022 (Loss of VI): • State the purpose of the AP • Recognize the symptoms that would require implementation of the AP AP22001			X	X	X
2	Describe the mitigating strategies (major actions) contained in the procedure. AP22002			X	X	X
3	Given scenarios describing accident events and plant conditions, evaluate the basis for any caution, note, or step. AP22003			X	X	X
4	Given scenarios describing accident events and plant conditions, evaluate conditions which require application of continuous action steps. AP22004			X	X	X
5	State the failure modes of the components listed in AP/22, Enclosure 12 (Valve Failure Mode on Loss of Air).			X	X	X

From AP-22 Enclosure 12 pages 1 of 6

NOTE The valves listed in this enclosure fail at various air pressures.

1. **BB valves:**

   a. The following BB valves fail closed:

   __ • 1BB-1B (1A S/G Blowdown Cont Outside Isol Control)
   __ • 1BB-2B (1B S/G Blowdown Cont Outside Isol Control)
   __ • 1BB-3B (1C S/G Blowdown Cont Outside Isol Control)
   __ • 1BB-4B (1D S/G Blowdown Cont Outside Isol Control)
   __ • 1BB-5A (A S/G BB Cont Inside Isol)
   __ • 1BB-6A (B S/G BB Cont Inside Isol)
   __ • 1BB-7A (C S/G BB Cont Inside Isol)
   __ • 1BB-8A (D S/G BB Cont Inside Isol)
   __ • 1BB-123 (1A S/G Blowdown Throttle Control)
   __ • 1BB-124 (1B S/G Blowdown Throttle Control)
   __ • 1BB-125 (1C S/G Blowdown Throttle Control)
   __ • 1BB-126 (1D S/G Blowdown Throttle Control).

2. **CA valves:**

   a. The following CA valves fail open:

   __ • 1CA-60A (1A CA Pump Disch To 1A S/G Control)
   __ • 1CA-56A (1A CA Pump Disch To 1B S/G Control)
   __ • 1CA-44B (1B CA Pump Disch To 1C S/G Control)
   __ • 1CA-40B (1B CA Pump Disch To 1D S/G Control)
   __ • 1CA-64AB (U1 TD CA Pump Disch To 1A S/G Control)
   __ • 1CA-52AB (U1 TD CA Pump Disch To 1B S/G Control)
   __ • 1CA-48AB (U1 TD CA Pump Disch To 1C S/G Control)
   __ • 1CA-36AB (U1 TD CA Pump Disch To 1D S/G Control).

3. **CF valves:**

   a. The following CF valves fail closed:

   __ • 1CF-32AB (1A S/G CF Control)
   __ • 1CF-23AB (1B S/G CF Control)
   __ • 1CF-20AB (1C S/G CF Control)
   __ • 1CF-17AB (1D S/G CF Control)
   __ • 1CF-104AB (1A S/G CF Control Bypass)
   __ • 1CF-105AB (1B S/G CF Control Bypass)
   __ • 1CF-106AB (1C S/G CF Control Bypass)
   __ • 1CF-107AB (1D S/G CF Control Bypass).

From AP-22 Enclosure 12 pages 3 of 6

8. **NV valves:**

a. The following NV valves fail open:

__ • 1NV-16A (NV Supply To D NC Loop Isol)
__ • 1NV-13B (NV Supply To A NC Loop Isol)
__ • 1NV-34A (A NC Pump Seal Return Isol)
__ • 1NV-50B (B NC Pump Seal Return Isol)
__ • 1NV-66A (C NC Pump Seal Return Isol)
__ • 1NV-82B (D NC Pump Seal Return Isol)
__ • 1NV-124 (Letdown Pressure Control)
__ • 1NV-238 (Charging Line Flow Control)
__ • 1NV-241 (U1 Seal Water Inj Flow Control)
__ • 1NV-267A (Boric Acid To Blender Control).

b. The following NV valves fail to the VCT position:

__ • 1NV-27B (Excess L/D Hx Otlt 3-Way Cntrl)
__ • 1NV-127A (L/D Hx Outlet 3-Way Temp Cntrl)
__ • 1NV-137A (NC Filters Otlt 3-Way Cntrl).

c. The following NV valves fail closed:

__ • 1NV-1A (NC L/D Isol To Regen Hx)
__ • 1NV-2A (NC L/D Isol To Regen Hx)
__ • 1NV-21A (NV Spray To PZR Isol)
__ • 1NV-24B (C NC Loop To Exs L/D Hx Isol)
__ • 1NV-25B (C NC Loop To Exs L/D Hx Isol)
__ • 1NV-26B (U1 Excess L/D Hx Outlet Cntrl)
__ • 1NV-35A (Variable L/D Orifice Outlet Cont Isol)
__ • 1NV-39A (A NC Pump Standpipe Fill)
__ • 1NV-55B (B NC Pump Standpipe Fill)
__ • 1NV-71A (C NC Pump Standpipe Fill)
__ • 1NV-87B (D NC Pump Standpipe Fill)
__ • 1NV-92A (NC Pumps Seal Byp Return Hdr Isol)
__ • 1NV-121 (U1 ND Letdown Control)
__ • 1NV-167A (VCT Vent To WG Isol)
__ • 1NV-171A (BA Blender To VCT Inlet)
__ • 1NV-175A (BA Blender to VCT Outlet)
__ • 1NV-457A (45 GPM L/D Orifice Outlet Cont Isol)
__ • 1NV-458A (75 GPM L/D Orifice Outlet Cont Isol)
__ • 1NV-459 (U1 Variable L/D Orifice Outlet Flow Cntrl)
__ • 1NV-840A (U1 ND To Pzr Aux Spray Control).

9. **RF valves:**

   a. The following RF valve fails closed:

   __ • 1RF-821A (Unit 1 RF Cont Outside Isol).

10. **RN valves:**

   a. The following RN valves fail open:

   __ • 1RN-89A (RN to A KC Hx Control)
   __ • 1RN-103A (A NV Pump Cooler Sup Isol)
   __ • 1RN-114A (A NI Pump Cooler Sup Isol)
   __ • 1RN-126A (A NS Pump ESS AHU Sup Isol)
   __ • 1RN-130A (A ND Pump ESS AHU Sup Isol)
   __ • 1RN-140A (A KF Pump ESS AHU Sup Isol)
   __ • 1RN-190B (RN To B KC Hx Control)
   __ • 1RN-204B (B NV Pump Cooler Sup Isol)
   __ • 1RN-215B (B NI Pump Cooler Sup Isol)
   __ • 1RN-227B (B NS Pump ESS AHU Sup Isol)
   __ • 1RN-231B (B ND Pump ESS AHU Sup Isol)
   __ • 1RN-240B (B KF Pump ESS AHU Sup Isol).

   b. The following RN valves fail closed:

   __ • 1RN-21A (1A RN Strainer Backwash Automatic Supply Isol)
   __ • 1RN-22A (1A RN Strainer Backwash Automatic Drain)
   __ • 1RN-25B (1B RN Strainer Backwash Automatic Supply Isol)
   __ • 1RN-26B (1B RN Strainer Backwash Automatic Drain)
   __ • 1RN-252B (RB Non Ess Sup Cont Outside Isol)
   __ • 1RN-277B (RB Non Ess Ret Cont Outside Isol).

11. **RV valves:**

   a. The following RV valves fail closed:

   __ • 1RV-79A (U1 VU AHUS RV Cont Outside Supply Hdr Isol)

   __ • 1RV-101A (U1 VU AHUS RV Cont Inside Return Hdr Isol)

   __ • 1RV-80B (U1 VU AHUS RV Cont Inside Supply Hdr Isol)

   __ • 1RV-102B (U1 VU AHUS RV Cont Outside Return Hdr Isol).

From AP-22 Page 8 of 121:

ACTION/EXPECTED RESPONSE	RESPONSE NOT OBTAINED

11. (Continued)

m. Control NC temperature as follows:

__ • Throttle ND flow.

NOTE
- KC to ND Hx flow should be close to flow prior to loss of VI, since it is normally controlled by motor operated valves.
- KC to ND HX flow indications fails low during a loss of VI. Alternate indications are available at the following locations, if needed:
  - 1A: 1KCFT-5670 (aux bldg, 733 +2', west of column MM-54)
  - 1B: 1KCFT-5680 (aux bldg, 733 +4', west side of column JJ-55).

__ • **IF** NC temperature is greater than 200°F, **THEN** maintain KC flow to ND Hx greater than 2000 GPM.

__ • Throttle KC Flow to ND Hx as required.

__ 12. **IF AT ANY TIME VI pressure is less than 70 PSIG, THEN align B Train RN to SNSWP PER Enclosure 7 (Aligning B Train RN to Pond).**

NOTE CF Control Valves will fail closed on low VI pressure, which may result in AMSAC actuation and Lo Lo S/G level.

__ 13. **Check S/G levels - AT PROGRAMMED LEVEL.**

IF S/G levels are going down in an uncontrolled manner, THEN perform the following:

__ a. Trip reactor.

__ b. Continue with this procedure as time allows.

__ c. **GO TO** EP/1/A/5000/E-0 (Reactor Trip or Safety Injection).

STEP 13:

PURPOSE:

Prompt the operators to watch S/G levels because the CF control valves fail closed on a loss of VI. If S/G levels can't be controlled, the Operator is directed to trip the reactor.

DISCUSSION:

The CF control valves use 0 – 60# valve operating air. Depending on the nature of the problem with VI and considering line losses, etc., these valves could start failing at 70# or more VI pressure as indicated in the control room. The operating philosophy regarding loss of Main Feedwater at power is to trip the reactor. This will prevent challenging the Lo-Lo S/G automatic reactor trip and will result in better initial conditions at the time of the manual trip. Refer to PIP 2-M-87-0208 where a automatic reactor trip occurred 5 min after loss of offsite power due to loss of VI to the CF valves. If the CF valves were to get to less than 25% open (for 30 sec or more) on 3 out of 4 S/Gs, an AMSAC could also be generated. For most scenarios, it's likely the operator will have manually tripped the reactor prior to this occurring.

REFERENCES:

PIP 2-M-87-0208

Parent Question AP22N01:

Question 6 AP22N01
1 Pt

Unit 1 is operating at 100 % power when a loss of VI event occurs.
AP/1/A/5500/22 (*Loss of VI*) has been implemented.
VI header pressure is 55 psig and going down.

Which of the following conditions would initially jeopardize the plant and require the SRO to direct tripping the Unit 1 Reactor per AP/1/A/5500/22 (*Loss of VI*)?

A. 1NV-238 (Charging Line Flow Control) fails closed.

B. 1CF-23AB (B S/G CF Control Vlv) fails closed.

C. 1RN-252B (RB Non Ess Sup Cont Outside Isol) fails closed.

D. 1NV-34A ("A" NC Pump Return Isolation) fails closed.

Answer 6 B

SYS103 A4.04 - Containment System
Ability to manually operate and/or monitor in the control room: (CFR: 41.7 / 45.5 to 45.8)
Phase A and phase B resets .....

Given the following conditions on Unit 1:

- A LOCA has occurred inside Containment
- Containment pressure is currently 3.5 PSIG

Which ONE (1) of the following describes the MINIMUM steps required before KC can be restored to Containment?

A. Reset Phase A

B. Reset Phase B

C. Reduce Containment pressure below 1.0 PSIG, reset Phase A

D. Reduce Containment pressure below 3.0 PSIG, reset Phase B

General Discussion

Phase B actuation secures Component Cooling Water (KC) to the Reactor Coolant pumps, Nuclear Service Water (RN) to the Reactor Coolant Pump Motor Coolers, Containment Ventilation Cooling Water (RV) and Instrument Air (VI) to the containment.

Phase "B" can be reset with signal still present, once resets are pushed, we regain control of valves that close on the Phase "B" signal.

Answer A Discussion

INCORRECT: See explanation above.

PLAUSIBLE: This answer is plausible if the applicant does not recall which signal (Phase A or Phase B) closes the Containment KC valves.

Answer B Discussion

CORRECT: See explanation above.

Answer C Discussion

INCORRECT: See explanation above.

PLAUSIBLE: The answer if the applicant does not recall whether the KC valves are closed by a Phase A or Phase B signal. If the applicant concludes that the valves are closed by a Phase A signal it is reasonable to also conclude that Containment pressure must be reduced to less than 1.0 PSIG (where a Phase A signal would be initiated by the Hi Containment pressure SI) in order to reset the the Phase A signal.

Answer D Discussion

INCORRECT: See explanation above.

PLAUSIBLE: This answer is plausible since the KC valves are closed by a Phase B signal and the signal must be reset to open the valves. It is reasonable for the applicant to conclude that the Hi-Hi Containment pressure signal "seals in" which would prevent resetting the Phase B signal unless Containment pressure is reduced to less than 3.0 PSIG.

Basis for meeting the KA

By demonstrating a knowledge of when the Phase B reset must be operated to regain control of equipment operated by the Phase B signal, the applicant demonstrates the ability to operate Phase B resets from the Control Room. Therefore the KA is matched.

Basis for Hi Cog

Basis for SRO only

Job Level	Cognitive Level	QuestionType	Question Source
RO	Memory	BANK	MNS Exam Bank ECCISEN04

Development References

Learning Objective:
1) ECC-ISE #13

References:
1) Lesson Plan OP-MC-ECC-ISE Section 3.1

Student References Provided

SYS103 A4.04 - Containment System
Ability to manually operate and/or monitor in the control room: (CFR: 41.7 / 45.5 to 45.8)
Phase A and phase B resets .....

401-9 Comments:

Remarks/Status

401-9 Comments:

Since Phase B is actuated (3.5 psig), it would appear that the KC valves are closed as stated. The distractor analysis for D appears to indicate that Cntmt pressure must be reduced to < 3 psig before phase B can be reset (because phase A is still in). In other words can one reset phase B without phase A being reset? Please re-verify this because the reference was not clear on this issue.

QUESTION 28 2528 B

This Q is E until re-verified.

Resolution / Comments:

Phase A does not have to be reset in order to reset Phase B. And, Phase B can be reset with containment pressure greater than 3.0 psig. The wording in distracter D analysis is incorrect. Instead of "prevent resetting the Phase A signal unless Containment pressure is reduced" is should have said "prevent resetting the Phase B signal unless Containment pressure is reduced". Changed analysis for distracter D accordingly.

Question 28 References:

From Lesson Plan OP-MC-ECC-ISE Section 3.1:

Objective # 13

Phase "B" Containment Isolation **is actuated by:**

Hi Hi Containment Pressure	> 3.0 psig on $^{2}/_{4}$ channels
Manually	$^{1}/_{2}$ pushbuttons

Phase B actuation secures Component Cooling Water (KC) to the Reactor Coolant pumps, Nuclear Service Water (RN) to the Reactor Coolant Pump Motor Coolers, Containment Ventilation Cooling Water (RV) and Instrument Air (VI) to the containment.

Phase "B" can be reset with signal still present, once resets are pushed, we regain control of valves that close on the Phase "B" signal.

Containment Ventilation Isolation (S_H) **is initiated by any of the following:**

- **Safety Injection (S_S)**
- **Manual Phase "A" (S_t)**
- **Manual NS/Phase "B"**
- **Trip 2 alarm on EMF-38, 39, or 40**

Containment Ventilation Isolation (S_H) signal secures VQ and VP.

To "Reset" Containment Ventilation Isolation following a Safety Injection, Manual Phase "A", or Manual Phase "B", the Containment Ventilation (S_H) "Reset" Pushbuttons must be depressed (can reset without resetting the initiating signal).

To "Reset" Containment Ventilation following an EMF 38, 39, 40 Trip II, the EMF must be reset, then the Containment Ventilation "Reset Pushbuttons must be depressed.

NOTE: Resetting the S_H signal will allow manual control of VQ valves. VQ valves do not have an auto function.

Annulus Ventilation System (VE) start maintains negative pressure in annulus. It is actuated automatically by a Hi Hi Containment pressure signal or manually by either depressing Manual "NS/Phase B" Pushbutton or placing VE (Annulus Ventilation) to "ON".

To reset the start signal we must reset the Phase "B" isolation, then, place VE (Annulus Ventilation) fan switch to "Reset" and place back in "auto".

H_2 Skimmer and Air Return Fan (VX) starts on a Hi Hi Containment Pressure (S_p) with CPCS or Manually by NS/Phase B pushbutton and CPCS after a 10 minute time delay.

Question 28 Parent Question:
ECCISEN04
1 Pt Given the following conditions:

1) Containment pressure is 3.8 psig
2) Phase B containment isolation has occurred

What are the minimum steps required to restore Component Cooling water to containment?

A. Restore KC to operation immediately

B. Reset Phase B, restore KC to operation

C. Reset SI, reset Phase B, restore KC to operation

D. Reduce containment pressure below 3.5 psig, reset Phase B, restore KC to operation

Answer 599
Answer *B*

MISCINFO: RO&SRO

SOURCE: BCH

REFERENCES: OP-MC-ECC-ISE page 29

LESSON: OP-MC-ECC-ISE TASK:

OBJECTIVE: 1.N.2 TIME:

K/A: 022000K403 (3.6*/4.0*) DATE: 11/29/95

C

2010 MNS SRO NRC Examination QUESTION 29

2529

SYS001 K6.13 - Control Rod Drive System
nowledge of the effect of a loss or malfunction on the following CRDS components: (CFR: 41.7/45.7)
Location and operation of RPIS .....

Give the following conditions on Unit 1:

- The unit is in MODE 3 withdrawing S/D banks in preparation for startup
- 1AD-2 / D10 (RPI Urgent Alarm) Annunciator has just alarmed
- DRPI and OAC RODS position indication for rod D-8 has been lost

What is the FIRST action required by SLC 16.7.9 (Rod Position Indication System - Shutdown)?

A. Place rods in manual ONLY.

B. Place rods in manual AND drive all rods in.

C. Immediately open the reactor trip breakers.

D. Restore rod position indication within 1 hour.

General Discussion

SLC 16.9.7 (Rod Position Indication System - Shutdown) requires that at least one rod position indicator be operable and capable of determining the control rod position within + 12 steps for each rod not fully inserted. This SLC is applicable to Modes 3,4,5. In the situation given in this question, the unit is in Mode 3 in the process of withdrawing S/D Banks. If rod position is lost for any rod, Condition A requires that the Reactor Trip breakers be opened immediately.

Answer A Discussion

INCORRECT: See explanation above.

PLAUSIBLE: With any malfunction involving the control rods this would be the required action in AP-14. It In this case given this is not the correct action because it is not required by SLC 16.9.7.

Answer B Discussion

INCORRECT: See explanation above.

PLAUSIBLE: If the applicant correctly remembers that a shutdown is required but confuses the required action with a one hour requirement. The verification of shutdown margin is consistent with almost every 1 hour action statement concerning rod alignment and position indication with the unit in Mode 1 or 2 therefore it would be plausible for the applicant to apply that requirement to this situation.

Answer C Discussion

CORRECT: See explanation above.

Answer D Discussion

INCORRECT: See explanation above.

PLAUSIBLE: This would satisfy the requirements of TS 3.1.4 (Rod Group alignment limit Action B. With One rod not within alignment limits, Action B.1 requires the rod to be restored within alignment limits within 1 hour. The applicant may incorrectly apply the actions of this spec because with the rod position indication unavailable it would be impossible to prove that it was within alignment limits.

Basis for meeting the KA

Although there is no physical cause/effect relationship between the RPIS and CRDS, for this particular instance, a malfunction has occurred in the RPIS and the effect on the CRDS is that operator action is required by SLC 16.7.9 to immediately de-energize the CRDS. Therefore, the KA is matched.

Basis for Hi Cog

Basis for SRO only

Job Level	Cognitive Level	QuestionType	Question Source
RO	Memory	BANK	Bank MNS ICEDAR01

Development References

SLC 16.9.7

Student References Provided

SYS001 K6.13 - Control Rod Drive System

Knowledge of the effect of a loss or malfunction on the following CRDS components: (CFR: 41.7/45.7)

Location and operation of RPIS .....

401-9 Comments:

Remarks/Status

401-9 Comments:

B is NP as written. Place in the stem "what is the FIRST action" and remove "and do not move them" from distractor B.
E because distractor B is NP as written.

Resolution / Comments:

Revised question per Lead Examiner's recommendation. Then

QUESTION 29 2529 C

rearranged distracters "A" and "B" for psychometrics mading "B" the new correct answer. If this is acceptable the distracter analysis will need to be reworked. See attached file for proped revision.

Question 29 References:

OP-MC-IC-EDA Obj. 10

10.	Concerning the Technical Specifications related to the DRPI System:					
	• Given the LCO title, state the LCO (including any COLR values) and applicability.					
	• For any LCO's that have action required within one hour, state the action.			X	X	X
	• Given a set of parameter values or system conditions, determine if any Tech. Spec. LCO's is (are) not met and any action(s) required within one hour.			X	X	X
	• Discus the bases for a given Tech. Spec. LCO or Safety Limit			X	X	X
	*** SRO ONLY**				X	*

From Selected Licensee Commitment 16.9.7

16.7 INSTRUMENTATION

16.7.9 Rod Position Indication System - Shutdown

COMMITMENT

One rod position indicator (excluding demand position indication) shall be OPERABLE and capable of determining the control rod position within ± 12 steps for each shutdown or control rod not fully inserted.

APPLICABILITY

MODES 3, 4 and 5 with the reactor trip breakers in the closed position with rods not fully inserted and capable of withdrawal.

----------NOTE----------

For testing or trouble shooting, alternate methods may be used to ensure there is no possibility of rod motion. These methods are pulling fuses, sliding links in the rod control cabinets or removal of CRDM head cables. After one of these alternate methods is used, the reactor trip breakers may remain in the closed position.

REMEDIAL ACTIONS

CONDITION	REQUIRED ACTION	COMPLETION TIME
A. One or more required rod position indicators inoperable.	Open the reactor trip breakers.	Immediately

Parent Question ICEDAR01

Question 29 ICEDAR01
1 Pt(s) Unit #1 is in Mode 3. While withdrawing Shutdown Bank "E", the DRPI rod position indication for Rod D-8 was lost at 96 steps. The Rod Position Indication (RPI) urgent failure annunciator, General Warning for D-8, and Rod Bottom Light for D-8 were received. OAC Program General 76 does not update for Rod D-8 when Bank "E" is moved. Select the action which must be taken by the operator:

A. Immediately trip the reactor

B. Place rods in manual and do not move them

C. Continue the startup but do not enter Mode 1

D. Drive all rods in and verify shutdown margin within 1 hour

Answer 29 A

SYS011 K3.02 - Pressurizer Level Control System (PZR LCS)
nowledge of the effect that a loss or malfunction of the PZR LCS will have on the following: (CFR: 41.7 / 45.6)
RCS .....

Given the following conditions on Unit 1:

- The unit is at 100% RTP
- All Pressurizer heaters are energized in MANUAL
- The SLIM for 1NV-238 (Charging Flow Control) has been placed in MANUAL due to a malfunction of the Pressurizer Level Master Controller
- The OATC reduces the 1NV-238 SLIM output to reduce Pressurizer level
- Charging Line Flow is inadvertently reduced to 18 GPM

If the 1NV-238 controller output remains constant, after 5 minutes Pressurizer level will be __(1)__ AND the Pressurizer heaters will be __(2)__.

Which ONE (1) of the following completes the statement above?

A. 1. DECREASING
   2. OFF

B. 1. DECREASING
   2. ON

C. 1. INCREASING
   2. OFF

D. 1. INCREASING
   2. ON

General Discussion

On the Pressurizer Level Master Controller, located on the NV - CHARGING FLOW CONTROL Graphic in DCS, the LI (Limit Increase) and LD (Limit Decrease) buttons are used to set a minimum limit "LM" for automatic charging flow to ensure seal injection flow to the NC Pumps is maintained. There is an "LM" setpoint window and also an "LM" bargraph displayed on the Level Master controller. The limit is set in gallons per minute. The normal setting is 35 gpm. This function is bypassed when the Pressurizer Level Master Controller or the SLIMs for NV-238 is placed in "MANUAL". This function is also bypassed when the SLIMs for NV-238 is placed in "L-MANUAL". This limit value is set up per OP/1(2)/A/6200/001A (Chemical and Volume Control System Letdown) Enc. 4.1.

In the event PZR Level decreases to 17%, valves NV1A, NV2A, NV457A, NV458A and NV35A are automatically closed. This isolates letdown to prevent further loss of inventory and minimize the possibility of uncovering the heaters. At the same time all PZR Heater groups are de-energized to protect them from overheating should they become uncovered. An Annunciator Alarm, PZR LO LEVEL HTRS OFF & LETDN SECURED, alerts the operator of the low level condition. Another feature which will isolate letdown and de-energize the pressurizer heaters is charging flow lowering to <20 gpm for > 20 seconds.
With this question, the changing flow is lowered to 18 GPM which would result in a L/D isolation. Approximately 12 GPM will still be leaving the NC system via NCP seal leakoff so with 18 GPM total charging, PZR level will be increasing and PZR heaters will be off.

Answer A Discussion

INCORRECT: See explanation above.

PLAUSIBLE: Part (1) is plausible if the applicant fails to realize that letdown is isolated or concludes that NCP seal leakoff is greater than the current charging flow.

Part (2) is correct and therefore plausible.

Answer B Discussion

INCORRECT: See explanation above.

PLAUSIBLE: Part (1) is plausible if the applicant fails to realize that letdown is isolated or concludes that NCP seal leakoff is greater than the current charging flow.

Part (2) is plausible because the heaters do not de-energize due to PZR low level until level reaches 17%. If the applicant fails to recall that heaters will be off due to the low flow condition associated with charging this answer is plausible.

Answer C Discussion

CORRECT: See explanation above.

Answer D Discussion

INCORRECT: See explanation above.

PLAUSIBLE: Part (1) is correct and therefore plausible.

Part (2) is This answer is plausible if the applicant does not recall that in addition to the letdown isolation when charging flow decreases to less than 20 GPM for 20 seconds the Pressurizer heaters are de-energized as well.

Basis for meeting the KA

The Pressurizer is part of the RCS. Any malfunction that effects Pressuirzer level effects RCS inventory and any malfunction that effects Pressurizer pressure effects RCS pressure. Since these malfunctions/operations affect both Pressurizer pressure and level, RCS pressure and inventory are both effected. Therefore, the KA is matched.

Basis for Hi Cog

This is a higher cognitive level question because it require more than one mental step. First the applicant must analyze the given condition to determine the status of the LCS and the potential consequences of the initial conditions. The applicant must then recall from memory the protective features which can be affected by operating the level control system in the configuration given and determine which protective actions are going to occur and in what order.

Basis for SRO only

Job Level	Cognitive Level	QuestionType	Question Source
RO	Comprehension	NEW	

2010 MNS SRO NRC Examination QUESTION 30

2530

C

Development References

arning Objective:
1) PS-ILE-DCS #17

References:
1) Lesson Plan OP-MC-PS-ILE-DCS Sections 2.4.1 & 2.5.1

Student References Provided

SYS011 K3.02 - Pressurizer Level Control System (PZR LCS)
Knowledge of the effect that a loss or malfunction of the PZR LCS will have on the following: (CFR: 41.7 / 45.6)
RCS .....

401-9 Comments:

Remarks/Status

Proposed revision for 2010 NRC Q-30.

Revision appoved RFA 07/06/10.

Question 30 High Miss Question Proposed Replacement References:

From Lesson Plan OP-MC-PS-ILE-DCS Section 2.4.1:

When the "Soft Control" or the SLIMs for NV-238 is placed in "Manual" or the SLIMs is taken to "L-MANUAL" the Pressurizer Level Master Controller is swapped to "Manual" also by DCS. However, when the "Soft Control" or the SLIMs for NV-238 is returned to "AUTO" the operator must place the Pressurizer Level Master Controller back in "AUTO".

Objective #7

On the Pressurizer Level Master Controller, located on the NV - CHARGING FLOW CONTROL Graphic in DCS, the LI (Limit Increase) and LD (Limit Decrease) buttons are used to set a minimum limit "LM" for automatic charging flow to ensure seal injection flow to the NC Pumps is maintained. There is an "LM" setpoint window and also an "LM" bargraph displayed on the Level Master controller. The limit is set in gallons per minute. **The normal setting is 35 gpm. This function is bypassed when the Pressurizer Level Master Controller or the SLIMs for NV-238 is placed in "MANUAL". This function is also bypassed when the SLIMs for NV-238 is placed in "L-MANUAL".** This limit value is set up per OP/1(2)/A/6200/001A (Chemical and Volume Control System Letdown) Enc. 4.1.

Objective #8

When in "MANUAL", the output of the controller sets a fixed position for NV-238. Increasing the output causes NV-238 to open, while decreasing the output causes NV-238 to close.

Objective #4

2.4.2 NV-238 SLIMs Station

This SLIMs station is used to control the position of NV-238. In AUTO, it compares the output of the Level Master to Selected Charging Flow (which is developed using a Median Select Algorithm with three charging flow inputs) to position the valve for needed charging flow. In "MANUAL or L-MANUAL", UP/DOWN push-button arrowheads are used to position the valve.

When the "Soft Control" or the SLIMs is taken to "MANUAL" or the SLIMs is taken to "L-MANUAL" the Pressurizer Master Level Controller is swapped to "MANUAL" also by DCS. However, when the "Soft Control" or the SLIMs for NV-238 is returned to "AUTO" the operator must place the Pressurizer Level Master Controller back in "AUTO".

Objective #4

2.4.3 PD Pump SLIMs Station

This station is used to control the speed of the PD Pump. **The Controller will be a MANUAL only controller.** The UP/DOWN arrowhead push-buttons are used to adjust speed.

If the AUTO pushbutton is depressed the "LED" on the AUTO pushbutton will illuminate and immediately return to the MANUAL pushbutton "LED" illuminating.

From Lesson Plan OP-MC-PS-ILE-DCS Section 2.5.1:

2.5 Control Functions

2.5.1 PZR Low Level

Objective #9

In the event PZR Level decreases to 17%, valves NV1A, NV2A, NV457A, NV458A and NV35A are automatically closed. This isolates letdown to prevent further loss of inventory and minimize the possibility of uncovering the heaters. At the same time all PZR Heater groups are de-energized to protect them from overheating should they become uncovered. An Annunciator Alarm, PZR LO LEVEL HTRS OFF & LETDN SECURED, alerts the operator of the low level condition. Another feature which will isolate letdown and de-energize the pressurizer heaters is charging flow lowering to <20 gpm for > 20 seconds. The Selected Charging flow signal is developed with a Median Select algorithm with input from three (3) transmitters measuring charging flow. The low charging flow signal is maintained for 15 seconds and then clears, therefore if Pressurizer Level is >17% the Pressurizer Heaters can be placed back into service even though charging flow may not have been restored.

Objective #11

Once level has increased to greater than 17% all heater groups must be manually re-energized and letdown can be re-established. This is accomplished by selecting "MAN" on "A", "B", and "D" Heater MAN/AUTO Selector Switch. This allows closing the 600V supply breaker from their control switches on MC-5. "C" Heater supply breaker is closed via the switch on MC-10. There is no "MAN/AUTO" switch for "C" Heater.

NOTE: If a Safety Injection has occurred, the Safety Injection signal and the sequencers must be reset in order to close the A & B heater breakers.

2.5.2 High Level Deviation

Objective #9

If level should increase to greater than 5% above program level an Annunciator alarm, PZR HI LEVEL DEV CONTROL, is generated and the back-up heaters come on. This is done so that the subcooled water which has just surged into the PZR can be heated to saturation temperature. This will allow the water to flash to steam and avoid a pressure decrease as the level decreases to normal.

2.5.3 Low Level Deviation

If level should decrease to less than 5% below program level an Annunciator alarm, PZR LO LEVEL DEVIATION, alerts the operator of the low level condition.

2.5.4 Hi Level Alarm

If level should increase to 70% an annunciator alarm, PZR HI LEVEL, alerts the operator of the high level condition.

SYS014 2.4.31 - Rod Position Indication System (RPIS)
SYS014 GENERIC
Knowledge of annunciator alarms, indications, or response procedures. (CFR: 41.10 / 45.3)

Unit 1 is operating at 100% RTP. The following indications are observed on the Digital Rod Position Indication (DRPI) system:

- D-4 rod indication is RED
- Associated rod group background is ORANGE
- 1AD-2 / D10 (RPI URGENT FAILURE) is LIT

Which ONE (1) of the following describes the condition of rod D-4?

A. Rod D-4 is fully inserted.

B. Rod D-4 is at half accuracy.

C. Rod D-4 position cannot be determined.

D. Rod D-4 is greater than 231 steps withdrawn.

General Discussion

The following indications are exhibited with a Data A and Data B failure:
a) Red position for indication for affected rods
b) Red U above affected rods
c) Red zero for affected rods position
d) Red RB light
e) Red Urgent alarm
f) Orange background for affected banks
g) Yellow Data Failure alarm (A and B)
h) Yellow deviation alarm
i) RPI Non-Urgent Annunciator
j) RPI Urgent Annunciator

Answer A Discussion

INCORRECT: See explanation above.

PLAUSIBLE: This answer is plausible since the applicant may conclude from the indications that the rod is fully inserted and the indication is valid based on the given conditions.

Answer B Discussion

INCORRECT: See explanation above.

PLAUSIBLE: It is plausible for the applicant to conclude that the rod is at half accuracy due to a Data A OR Data B failure

Answer C Discussion

CORRECT: See explanation above.

Answer D Discussion

INCORRECT: See explanation above.

PLAUSIBLE: This answer is plausible if the applicant concludes that a rod which is >231 steps withdrawn gives an RPI urgent failure. DRPI is not capable of monitoring a rod greater than 231 step withdrawn and it would be reasonable for the applicant to conclude that this condition would result in an urgent failure which would be consistent with any other condition where DRPI could not determine actual rod position.

Basis for meeting the KA

The KA is matched because the applicant must understand the meaning of numerous DRPI system alarms and their impact on the operation of the DRPI system.

Basis for Hi Cog

This is a higher cognitive level question. The applicant must recall what each DRPI alarm means with regards to the operation of the system. The applicant must then analyze from the multiple alarms given in the initial conditions the overall impact on the DRPI system. Since the question requires multiple mental steps to arrive at the correct answer, this is a higher cognitive level question.

Basis for SRO only

Job Level	Cognitive Level	QuestionType	Question Source
RO	Comprehension	BANK	CNS 2008 RO Audit Retake Exam (Q1857)

Development References

Learning Objectives:
1) IC-EDA #7 & 8

References:
1) Lesson Plan OP-MC-IC-EDA Section 3.2.1

Student References Provided

SYS014 2.4.31 - Rod Position Indication System (RPIS)
SYS014 GENERIC
Knowledge of annunciator alarms, indications, or response procedures. (CFR: 41.10 / 45.3)

QUESTION 31 2531 C

401-9 Comments:

Remarks/Status

401-9 Comments:

I think the answer is obvious as written. Can you reduce the stem indications to make it less obvious?
"D" is NP because of the 3rd bullet (Red "RB" is indicated for rod D-4)
Replace D

Resolution / Comments:

Revised question and removed third bullet. Didn't really see how we could replace "D" with anything that was more plausible. Removing third bullet gives "D" plausibility. See attached file for revised copy of question.

Question 31 References:

From Lesson Plan OP-MC-IC-EDA Section 3.2.1:

DRPI Urgent Alarm

Objective #7,8

Refer to Drawing 7.10, D.R.P.I Display Data A + B Failure (Urgent).

DRPI Urgent Alarm caused by Data A Failure and Data B Failure on a rod P-8:

- The best calculated position indicated immediately below rod P-8 alpha-numaric designator would indicate a red "0".
- The failure status line would indicate a red "U" above rod P-8 bar graph.
- The rods' bar graph would turn red and indicate rod height of "0".
- The background color for Control Bank "C" would turn orange.
- A red "RB" would be indicated on the rod bottom status line.
- The system status line would indicate a yellow DATA A FAILURE, yellow DATA B FAILURE, red URGENT ALARM, and since the other rods in this bank are > 12 steps withdrawn a yellow DEVIATION > 12 STEPS.

Refer to Drawing 7.11, D.R.P.I Display Rod Deviation (Urgent)

DRPI Urgent Alarm caused by an actual deviation of 12 steps on a rod P-8:

- The background color for Control Bank "C" would turn orange.
- The system status line would indicate a red URGENT ALARM and a yellow DEVIATION > 12 STEPS condition.

Refer to Drawing 7.12, D.R.P.I Display Gray Codes Disagree (Urgent)

DRPI Urgent Alarm caused by gray codes not in agreement on rod P-8 with the result the best calculated position is 12 steps or more from other rods in the bank.

- The best calculated position indicated immediately below rod P-8 alpha-numaric designator would indicate a average of Data "A" and Data "B".
- The rods' bar graph would turn yellow.
- The background color for Control Bank "C" would turn orange
- The system status line would indicate a red URGENT ALARM and a yellow DEVIATION > 12 STEPS condition.

Note that if the gray codes not in agreement resulted in an averaged position within 12 steps of the other rods, there would be no deviation or urgent indications. The only indication would be the rod would turn yellow with a "RPI Non-Urgent" Annunciator. An example of this scenario is when leads for Data A and Data B are rolled, and rods are withdrawn. DRPI sees the B coil made first, knows this is a "disagreement" and intermittently turns the rod yellow (until the A coil is made), but the indicated position never gets 12 steps from the other rods, so no deviation and no urgent alarm.

2008 CNS RO Audit Retake Examina QUESTION 57

1857

D

KA	KA_desc
SYS014	Knowledge of RPIS design feature(s) and/or interlock(s) which provide for the following : (CFR: 41.5 / 45.7)□Rod bottom lights .....
K4.03	

Unit 1 is operating at 100% power. Given the following indications on the Digital Rod Position Indication (DRPI) system:

- Associated bank background is orange
- D-4 rod indication is red
- Red "RB" is indicated for rod D-4
- 1AD-2, D/10 "RPI URGENT FAILURE" is alarming

Which one of the following describes the condition of rod D-4?

A. Rod D-4 is at half accuracy

B. Rod D-4 at greater than 231 steps withdrawn

C. Rod D-4 is fully inserted

D. Rod D-4 position cannot be determined

General Discussion

The following indications are exhibited with a Data A and Data B failure:
a) Red position for indication for affected rods
b) Red U above affected rods
c) Red zero for affected rods position
d) Red RB light
e) Red Urgent alarm
f) Orange background for affected banks
g) Yellow Data Failure alarm (A and B)
h) Yellow deviation alarm
i) RPI Non-Urgent Annunciator
j) RPI Urgent Annunciator

Answer A Discussion

Plausible: The student may believe the rod is at half accuracy due to a Data A OR Data B failure

Answer B Discussion

Plausible: The student may believe that rod is >231 steps withdrawn gives an RPI urgent failure.

Answer C Discussion

Plausible: The student may believe the rod is fully inserted and the indication is valid based on the given conditions

Answer D Discussion

Correct: The indications given are for a Data A and Data B failure for rod D-4

Basis for meeting the KA

Basis for Hi Cog

Basis for SRO only

Job Level	Cognitive Level	QuestionType	Question Source
RO	Comprehension	BANK	2007 Audit Examination#2 Q53 (Bank 53)

Development References	Student References Provided
EDA	

KA	KA_desc
SYS014	Knowledge of RPIS design feature(s) and/or interlock(s) which provide for the following : (CFR: 41.5 / 45.7)□Rod bottom lights .....
K4.03	

401-9 Comments:	Remarks/Status

SYS015 K2.01 - Nuclear Instrumentation System (NIS)
nowledge of bus power supplies to the following : (CFR: 41.7)
IS channels, components, and interconnections .....

Given the following conditions on Unit 1:

- Unit is shutdown in MODE 6 for Refueling
- While responding to a series of alarms associated with the NI's the operator notices that the Instrument Power and Control Power lights on the PR N43 drawers are DARK

Which ONE (1) of the following is the cause of these indications?

A. Inverter 1EVIA has tripped.

B. The feeder breaker for panelboard 1EKVB has tripped.

C. Inverter 1EVIC has tripped.

D. The feeder breaker for panelboard 1EKVD has tripped.

General Discussion

NIS Channel 3 (PR N43) is powered from 1EKVC which is fed from Static Inverter 1EVIC.

Answer A Discussion

INCORRECT: See explanation above.

PLAUSIBLE: This answer is plausible because Static Inverter 1EVIA supplies panelboard 1EVCA which powers NIS Channel 1 (N31, N35, and N41).

Answer B Discussion

INCORRECT: See explanation above.

PLAUSIBLE: This answer is plausible because panelboard 1EKVB provides power to NIS Channel 2 (N32, N36, and N42).

Answer C Discussion

CORRECT: See explanation above.

Answer D Discussion

INCORRECT: See explanation above.

PLAUSIBLE: This answer is plausible because panelboard 1EKVD provides power to NIS Channel IV (N44).

Basis for meeting the KA

The KA is matched because the applicant must know the power supplies for all NIS channels to determine the correct answer.

Basis for Hi Cog

Basis for SRO only

Job Level	Cognitive Level	QuestionType	Question Source
RO	Memory	NEW	

Development References

Learning Objectives: EL-EPL #5 & 6

References:
1. Lesson Plan OP-MC-EL-EPL Section 1.2
2. Lesson Plan OP-MC-IC-ENB Section 2.7

Student References Provided

SYS015 K2.01 - Nuclear Instrumentation System (NIS)
Knowledge of bus power supplies to the following : (CFR: 41.7)
NIS channels, components, and interconnections .....

401-9 Comments:

Remarks/Status

401-9 Comments:

No comment.

Resolution / Comments:

N/A

Question 32 References:

From Lesson Plan OP-MC-EL-EPL Section 1.2:

120 VAC Vital Instrumentation and Control Power System

Objective # 5

The 120 VAC Vital Instrumentation and Control Power System consist of four vital panelboards and four inverters to each unit. The four vital panelboards will normally receive power through static inverters 1(2) EVIA, 1(2) EVIB, 1(2) EVIC and 1(2) EVID. A regulated power supply (1KRP for Unit 1 and 2 KRP for Unit 2) is also provided, as an alternate power source, to allow uninterruptible manual power transfer to panelboards 1(2) EKVA, 1(2) EKVB, 1(2) EKVC, and 1(2) EKVD when an inverter is intentionally taken out-of-service.

This system provides four independent channels for instrumentation and control power to both units (Unit 1 and 2). "A" Train loads are fed from channels "A" and "C" while the "B" Train loads are fed from channels "B" and "D". Three of the four channels will ensure that the overall system functional capability is maintained, comparable to the original design standards for safe operation. However, a loss of any two of these channel sources will result in a shutdown of the respective unit.

Objective # 6

The following is a listing of typical loads that are powered from the 120 VAC Distribution Centers:

- NIS Channels 1 thru 4 Instrument Power
- NIS Channels 1 thru 4 Control Power
- SSPS Instrument Power
- SSPS Control Power
- FWST Channels 1 thru 4 Instrument Power
- Containment Radiation Monitors Isolation Valves
- Auxiliary Safeguard Cabinets Instrument Power
- Post Accident Recorders
- Post Accident Annunciators

1.0 COMPONENT DESCRIPTION

1.1. 125 VDC Vital Instrumentation and Control Power System Battery Chargers

The two-unit station is provided with five battery chargers, designated EVCA, EVCB, EVCC, EVCD; and a spare battery charger, designated EVCS, which can be used to replace a charger if required. These chargers, supplied by SCI (Solid state Controls Incorporated), are 500 ampere chargers with a charging capability of 500-625 amps, however, we have them current limited at 525 amperes.

From Lesson Plan OP-MC-IC-ENB Section 2.7:

2.7 Power Supplies

NIS Channel I	EKVA
NIS Channel II	EKVB
NIS Channel III	EKVC
NIS Channel IV	EKVD
Wide Range Train A	EKVA
Wide Range Train B	EKVD

3.0 SYSTEM OPERATION

3.1 Normal Operation

3.1.1 Operating Procedures

The Excore Nuclear Instrumentation System provides the operator with neutron flux indication for all modes of operations. During each reactor startup, a healthy skepticism concerning the validity of power indications is warranted, particularly following a refueling outage. Changes in plant equipment or conditions, along with a strong desire to return the plant to full operation, may influence personnel to accept less than complete explanations for discrepant indications. For example, excessive electrical generation for the nuclear power indicated (a symptom of miscalibrated nuclear instruments) has been attributed to factors such as: cold circulating water temperature, expected efficiency improvements, and changes in core design or instrumentation.

2010 MNS SRO NRC Examination QUESTION 33

2533

B

SYS016 K4.01 - Non-Nuclear Instrumentation System (NNIS)
Knowledge of NNIS design feature(s) and/or interlock(s) which provide for the following: (CFR: 41.7)
Reading of NNIS channel values outside control room .....

Which ONE (1) of the following sets of indications can be read outside the Main Control Room on BOTH the Auxiliary Shutdown Panel (ASP) AND the Safe Shutdown Facility (SSF) Control Panel?

A. SR Neutron Flux AND S/G WR Levels

B. SR Neutron Flux AND Pressurizer Level

C. Incore Thermocouples AND S/G WR Levels

D. Incore Thermocouples AND Pressurizer Level

General Discussion

Pressurizer level and SR Neutron Flux can be read outside the Main Control Room on both the ASP and SSF Control Panels.

Answer A Discussion

INCORRECT: See explanation above.

PLAUSIBLE: This answer is plausible because SR Neutron Flux can be read on the both the ASP and the SSF. SG Wide Range level can be read on the SSF but not on the ASP.

Answer B Discussion

CORRECT: See explanation above.

Answer C Discussion

INCORRECT: See explanation above.

PLAUSIBLE: This answer is plausible because S/G WR Levels and Incore Thermocouples can both be read on the SSF Control Panel .

Answer D Discussion

INCORRECT: See explanation above.

PLAUSIBLE: This answer is plausible because Incore Thermocouples can be read on the SSF Control Panel and Pressurizer level can be read on both the ASP and SSF.

Basis for meeting the KA

The KA is matched because the applicant must recall all indications (both Nuclear and Non-Nuclear indications) available at the SSF and ASP.

Basis for Hi Cog

Basis for SRO only

Job Level	Cognitive Level	QuestionType	Question Source
RO	Memory	NEW	

Development References

Learning Objectives:
1. CP-ASP #2
2. CP-AD #8

References:
1. Lesson Plan OP-MC-CP-AD Section 2.1
2. Lesson Plan OP-MC-CP-ASP Section 2.1

Student References Provided

SYS016 K4.01 - Non-Nuclear Instrumentation System (NNIS)
Knowledge of NNIS design feature(s) and/or interlock(s) which provide for the following: (CFR: 41.7)
Reading of NNIS channel values outside control room .....

401-9 Comments:

Remarks/Status

401-9 Comments:

Consider adding an additional indication to increase LOD.
A,A (none good)
A,B (B good only)
B,B (All good)
B,A (B good only

Resolution / Comments:

Developed a revised question with two answers per distracter. If

QUESTION 33 2533 B

revised question is used the distracter analysis will need to be revised. See attached file for revised copy of question.

Question 33 References:

From Lesson Plan OP-MC-CP-ASP Section 2.1:

1.0 COMPONENT DESCRIPTION

1.1. Panel Indications (Refer to Drawings 7.1, 7.2, 7.3, & 7.4)

1.1.1. Temperature indications (all temperature indication is continuous)

- Reactor Coolant System Wide Range Hot Leg Temperature (0-700°F) Loop D Hot Leg
- Reactor Coolant System Wide Range Cold Leg Temperature (0-700) Loop D Cold Leg
- Regenerative Heat Exchanger Letdown Temperature (100-600)
- A & B ND Pump Discharge Temperature (50-400°F)
- A, B, C, & D ND to Cold Leg Temperatures (50-400°F)

1.1.2. Pressure Indications (all pressure indication is continuous)

- Wide Range Reactor Coolant System Pressure (0-3000 psig)
- Narrow Range Reactor Coolant System Pressure (PZR Press) (1700-2500 psig)
- Letdown Pressure (0-600 psig)

1.1.3. Level Indications (continuous)

- Channel 1 Pressurizer Level (0-100%)

1.1.4. Flow Indications (continuous)

- Letdown Flow (0-200 gpm)

1.1.5. Power Indication (continuous)

- SR Nuclear Flux (10^{-1} - 10^{5} cps, separately detected, not part of the NIS)

1.2. Manual Loaders on the Panel

1.2.1. NV-459 (Variable L/D Orifice Outlet Flow Control)

It is used to throttle letdown flow rate when initiating letdown. Throttling prevents thermal shock of the letdown piping by allowing the operator to slowly initiate letdown. Per procedures, excess letdown is established if normal letdown is not in service.

1.2.2. NV-21A (NV Spray to PZR Isol)

It is used to control NC System pressure if the normal spray valves are unavailable or not functioning properly (**Note:** the normal spray valves should be operating in Auto, and no control of them on the ASP). It's used on the ASP for NC System pressure control during cooldown. Letdown **must** be in service before this valve can be used. This is to ensure the ΔT between the Pressurizer Temperature and Spray Water is less than 320°F, which aids in preventing thermally shocking the spray nozzle. When NV-21 is being used, valves NV-13B and 16A must be closed (Normal and Alternate Charging) which allows the operator to maintain a more constant letdown and charging flow balance.

From Lesson Plan OP-MC-CP-AD Section 2.1:

The pump is driven by an induction motor powered from the standby shutdown power supply. Control switches for the pumps and various isolation valves are located on the SSF Control Panel.

A filter is provided downstream of the pump to collect any particulate matter larger than 5 microns that could cause damage to the reactor coolant pump seals. Filter differential pressure is indicated locally.

Since the makeup pumps deliver a constant flowrate to the Reactor Coolant System, it may become necessary to remove excess water to maintain Pressurizer level 60 - 80%. Solenoid operated, reactor vessel head vent valves (NC272 & 273) are powered by the Standby Shutdown system to allow discharge of water to the Pressurizer Relief Tank (PRT). Controls for these valves are located on the SSF Control Panel.

A flowpath for the Standby M/U Pump is provided by opening NV842AC and NV849AC. These valves will close on a Phase A (S_t) signal if they are being powered from their normal power supply (EMXA-4). Once control is swapped to the SSF and EMXA-4 is swapped to its alternate power supply (MCC SMXG) the valves will no longer close on a Phase A (S_t) signal.

Pressurizer level is indicated on the SSF Control Panel.

1.2.3. Temperature Indication

Five Core Exit Thermocouples can be monitored from the SSF Control Panel to monitor core conditions. A multi-conductor cable that is connected on the side of the control panel must be relocated in order to view the thermocouple readings.

The highest reading Core Exit Thermocouple is used to determine subcooling. Indication is also provided for the Incore reference junction temperature deviation. This temperature deviation indication is used to obtain a corrected Core Exit Thermocouple value to be used in determining subcooling.

Indication is also provided for Loop "A" and "D" WR Cold Leg temperatures.

1.2.4. Pressure Control

In order to prevent steam bubble formation in the reactor vessel, primary pressure must be maintained above saturation pressure at the core exit temperature. A sub-group of Back-Up Heater Group "D" (≈70 kW) is powered from the SSF electrical distribution system and can be controlled from the SSF Control Panel. The heaters are energized as necessary to maintain subcooling if pressure decreases. This ensures the steam bubble stays in the Pressurizer. The heaters have a LOCAL/REMOTE switch and a control switch. The LOCAL position bypasses all AUTO and Control Room functions.

The Pressurizer Spray valves can also be controlled from the SSF Control Panel. The spray valves have open/close switches which are used to ensure that the spray valves remain closed (gives a "hard" closed signal). The normal position for this switch is the closed position. This switch is only functional when controlling (via EMXA-4 swap) from SSF.

Reactor Coolant System wide range pressure indication is provided on the SSF Control Panel.

1.2.5. Flux Indication

WR Neutron Flux Indication is provided on the SSF Control Panel. Indication is provided from 10^{-1} CPS up to 10^{5} CPS.

1.3. Secondary System Control

Steam Generator Wide Range level indication is provided on the SSF Control panel. These level indicators are calibrated for hot conditions since the design of the SSF is to maintain Hot Standby.

The TD CA Pump will auto start if 1/1 WR level transmitter indicates 72% on 2/4 S/G's. A step in the body of AP-24 "Loss of Plant Control due to Fire or Sabotage" will have the operator manually start the TD CA pump prior to leaving the control room and a step in AP-24 Enc. 1 will place SA-48ABC in the open position at the SSF. Procedurally the TDCA flow will be controlled based on the availability of the controls in this order: control room, the CA pump room or locally in the doghouses. A steam supply is assured to the TD CA Pump on swap over to the SSF due to the MSIV and S/G PORV on "C" S/G failing closed. Feedwater is also assured to provide a heat sink due to the CA supply valves (CA 54AC and CA 66AC) from the TD CA Pump to "B" and "A" S/G's failing as is (with a normal position of open) on swap over to the SSF. Feedwater is provided to "C" S/G from the TD CA Pump by verifying CA50B (TD CA to S/G C Isol) open and securing the hand wheel clutch in the engaged position as directed by procedure.

NOTE: The word disengaged in the next paragraph refers to the motor not the handwheel.

Permanently installed step ladders were added in the basement of the doghouse near CA54AC and CA66AC. The motor operator clutch levers for CA38B, CA50B, CA54AC,

and CA66AC have eyelets such that an eyebolt can be screwed into them to secure the lever in the disengaged position. The eyebolts are stored on the clutch lever plates using a short piece of small wire. Labels are attached with this wire which indicates that eyebolts are dedicated for use during certain SSF Events.

A two position switch for SA-48ABC (A FWDT Steam Supply) is located on the SSF Control Panel to prevent continual cycling of the TD CA Pump. The two positions are:

AUTO: SA-48ABC will open in response to an auto start signal.

OPEN: Seals in SA-48ABC in the open position and bypasses the auto start signal. This switch will normally be maintained in the "Auto" position. It will be selected to open by Enclosure 1 of AP-24 to seal in the auto start signal to the TDCA pump.

NOTE: This switch will only affect the SSF related solenoids.

SYS028 A2.01 - Hydrogen Recombiner and Purge Control System (HRPS)

Malfunctions or operations on the HRPS; and (b) based on those predictions, use procedures to correct, control or mitigate the consequences of those malfunctions or operations: (CFR: 41.5 / 43.5 / 45.3 / 45.13)

Hydrogen recombiner power setting, determined by using plant data book .....

Given the following on Unit 1:

- A LOCA occurred 24 hours ago
- The 1A H2 Recombiner was placed in service per EP/1/A/5000/G-1 Enclosure 4 (Placing H2 Recombiners In Service)
- Containment pressure was 5 PSIG when the Recombiner was placed in service

Current Conditions are as follows:

- Containment pressure is 1.5 PSIG

Based on the conditions above the recombiner Power Setting was __(1)__ when the recombiner was placed in service and should now be set to __(2)__.

Which ONE (1) of the following completes the statement above?

REFERENCE PROVIDED

A. 1. 49.8 KW
   2. 45.3 KW

B. 1. 49.8 KW
   2. 45.8 KW

C. 1. 50.3 KW
   2. 45.3 KW

D. 1. 50.3 KW
   2. 45.8 KW

General Discussion

In the scenario given with this question the power setting for the H2 recombiner should initially be 49.8 KW based on the initial containment pressure. Based on the current containment pressure of 1.5 PSIG the power setting should be 45.8 KW.

Initial Power setting -

Pressure Factor, CP = 1.395 @ 5 PSIG
Reference Power = 35.670 KW

Power Setting = CP x Reference Power

Power Setting = 1.395 x 35.67 = 49.8 KW

Current Power setting -

Pressure Factor, CP = 1.285 @ 5 PSIG
Reference Power = 35.670 KW

Power Setting = CP x Reference Power

Power Setting = 1.285 x 35.67 = 45.8 KW

Answer A Discussion

INCORRECT: See explanation above.

PLAUSIBLE: Part 1 is correct. Part 2 is plausible if the applicant incorrectly reads the wrong pressure line on the graph. Incorrectly reading the graph is plausible since the major divisions are in 2 PSIG increments and the minor divisions are in 1/2 PSIG increments.

Answer B Discussion

CORRECT: See explanation above.

Answer C Discussion

INCORRECT: See explanation above.

PLAUSIBLE: Both parts are plausible if the applicant incorrectly reads the wrong pressure line on the graph. Incorrectly reading the graph is plausible since the major divisions are in 2 PSIG increments and the minor divisions are in 1/2 PSIG increments.

Answer D Discussion

INCORRECT: See explanation above.

PLAUSIBLE: Part 1 is plausible if the applicant incorrectly reads the wrong pressure line on the graph. Incorrectly reading the graph is plausible since the major divisions are in 2 PSIG increments and the minor divisions are in 1/2 PSIG increments. Part 2 is correct.

Basis for meeting the KA

The KA is matched because the applicant is asked to determine the Power Setting for the recombiner under two different conditions. This requires the applicant to determine the Pressure Factor both conditions using the Power Correction Factor curve from the Plant Data Book and then calculate the correct Power Setting for each condition.

Basis for Hi Cog

This is a hi cog question because the applicant must read the Power Correction Factor graph from the Plant Data Book and use the information from the graph to calculate the correct power setting. Since this requires more than one mental step, it is a higher cognitive level question.

Basis for SRO only

Job Level	Cognitive Level	QuestionType	Question Source
RO	Comprehension	NEW	

Development References

Lesson Plan OP-MC-CNT-VX Pg. 27 (Rev 23)

OP-MC-CNT-VX Obj. 7

Student References Provided

U-1 Data Book Curve 1.8
EP Generic Enc G-1 End. 4

2010 MNS SRO NRC Examination QUESTION 34

2534

B

SYS028 A2.01 - Hydrogen Recombiner and Purge Control System (HRPS)

alfunctions or operations on the HRPS; and (b) based on those predictions, use procedures to correct, control or mitigate the consequences of hose malfunctions or operations: (CFR: 41.5 / 43.5 / 45.3 / 45.13)

Hydrogen recombiner power setting, determined by using plant data book .....

401-9 Comments:

Remarks/Status
401-9 Comments: No comment. ---------- Resolution / Comments: Replaced "should" in stem of question with "will" based on General Comment from Lead Examiner. See attached copy of question for proposed revision.

From OP-MC-CNT-VX Pg. 27 (Rev 23)

3.2 Abnormal and Emergency Operation

The control panels for the electrical Recombiners are located in the MG set rooms. The recombiner units are located in Containment such that they process a flow of Containment air containing hydrogen at a concentration typical of the lower containment compartments. This is because the Hydrogen Skimmer Fans discharge in the vicinity of the Recombiners and the Recombiners process that flow. There is no direct piping or duct connection between the Recombiners and the Hydrogen Skimmer Fans.

The recombiner consists of a thermally insulated vertical metal duct with electric resistance metal-sheathed heaters provided to heat a continuous flow of Containment air (containing a low concentration of hydrogen), up to a temperature which is sufficient to cause a reaction between hydrogen and oxygen (between 1225°F and 1400°F). The recombiner is provided with an outer enclosure to keep out water coming from the Containment Spray System. The recombiner consists of an inlet preheater section, a heater-recombination section, and a mixing chamber.

The warmed air passes through an orifice plate (should protect the recombiner from being overloaded from higher hydrogen concentrations up to 6.0%) and then enters the electric heater section where it is heated to approximately 1225-1400°F causing recombination to occur. Tests have verified that the recombination is not a catalytic surface effect associated with the heaters, but occurs due to the increased temperature of the process gases. Since the phenomenon is not a catalytic effect, poisoning of the unit as by fission products will not occur. The heater section consists of five assemblies of electric heaters stacked vertically. Each assembly contains individual heating elements. Operation of the unit is virtually unaffected in the event of a few individual heating elements failing to function properly.

Objective #7

The recombiners are equipped with chromel-alumel thermocouples with a reference junction monitored with an RTD. Digital temperature meters are provided on the Hydrogen Recombiner Heater Temperature Monitor Panel **(refer to Drawing 7.3)** located in the MG set rooms. The display is normally off but may be operated if desired by:

1) Power on
2) Unit will perform self diagnostics and
   Return: Command?,
3) Press AUTO key.

The unit will display sequentially the three thermocouples points (numbered 1, 2, 3) and the reference junction temperature (number 4). The value for the reference junction is not fixed and is used to perform reference junction compensation for the thermocouples inputs. The three thermocouples provide recombiner temperature indication during testing. Temperature indication is not required during a LOCA, so the thermocouples portion of the recombiners is non-safety related, and both trains are on the same panel.

Question 34 References:

	OBJECTIVE	NLO	NLOR	LPRO	LPSO	LOR
7.	Discuss the instrumentation and controls associated with the Hydrogen Recombiners, to include: • Temperature readout • Power adjust potentiometer • Power out meter • Power out switch • Power available light.	X	X	X	X	X
8.	Discuss the instrumentation associated with the Hydrogen Analyzer Concentration Monitors.	X	X	X	X	X
9.	Evaluate plant parameters to determine any abnormal system conditions that may exist.	X	X	X	X	X
10.	Given a limit and/or precaution associated with an Operating Procedure, discuss it's basis and applicability.	X	X	X	X	X
11	Concerning the Technical Specifications related to the VX System:					
	• Given the LCO title, state the LCO (including any COLR values) and applicability.			X	X	X
	• For any LCO's that have action required within one hour, state the action.			X	X	X
	• Given a set of parameter values or system conditions, determine if any Tech. Spec. LCO's is (are) not met and any action(s) required within one hour.			X	X	X
	• Given a set of parameter values or system conditions and the appropriate Tech Spec, determine required action(s)			X	X	X
	• Discus the bases for a given Tech. Spec. LCO or Safety Limit				X	*
	*** SRO ONLY**					

From OP-MC-CNT-VX Pg. 27 (Rev 23)

3.2 Abnormal and Emergency Operation

The control panels for the electrical Recombiners are located in the MG set rooms. The recombiner units are located in Containment such that they process a flow of Containment air containing hydrogen at a concentration typical of the lower containment compartments. This is because the Hydrogen Skimmer Fans discharge in the vicinity of the Recombiners and the Recombiners process that flow. There is no direct piping or duct connection between the Recombiners and the Hydrogen Skimmer Fans.

The recombiner consists of a thermally insulated vertical metal duct with electric resistance metal-sheathed heaters provided to heat a continuous flow of Containment air (containing a low concentration of hydrogen), up to a temperature which is sufficient to cause a reaction between hydrogen and oxygen (between 1225°F and 1400°F). The recombiner is provided with an outer enclosure to keep out water coming from the Containment Spray System. The recombiner consists of an inlet preheater section, a heater-recombination section, and a mixing chamber.

The warmed air passes through an orifice plate (should protect the recombiner from being overloaded from higher hydrogen concentrations up to 6.0%) and then enters the electric heater section where it is heated to approximately 1225-1400°F causing recombination to occur. Tests have verified that the recombination is not a catalytic surface effect associated with the heaters, but occurs due to the increased temperature of the process gases. Since the phenomenon is not a catalytic effect, poisoning of the unit as by fission products will not occur. The heater section consists of five assemblies of electric heaters stacked vertically. Each assembly contains individual heating elements. Operation of the unit is virtually unaffected in the event of a few individual heating elements failing to function properly.

Objective #7

The recombiners are equipped with chromel-alumel thermocouples with a reference junction monitored with an RTD. Digital temperature meters are provided on the Hydrogen Recombiner Heater Temperature Monitor Panel **(refer to Drawing 7.3)** located in the MG set rooms. The display is normally off but may be operated if desired by:

1) Power on
2) Unit will perform self diagnostics and
   Return: Command?,
3) Press AUTO key.

The unit will display sequentially the three thermocouples points (numbered 1, 2, 3) and the reference junction temperature (number 4). The value for the reference junction is not fixed and is used to perform reference junction compensation for the thermocouples inputs. The three thermocouples provide recombiner temperature indication during testing. Temperature indication is not required during a LOCA, so the thermocouples portion of the recombiners is non-safety related, and both trains are on the same panel.

ACTION/EXPECTED RESPONSE	RESPONSE NOT OBTAINED

1. **Select one train of H_2 Recombiner to be placed in service:**

__ • To start 1A H_2 Recombiner, GO TO Step 2.

OR

__ • To start 1B H_2 Recombiner, GO TO Step 5.

2. **Determine 1A H_2 Recombiner power setting as follows:**

__ a. Determine "PRESSURE FACTOR, CP" from Data Book Curve 1.8.

__ b. Multiply "1A REFERENCE POWER" listed on Data Book Curve 1.8 by "PRESSURE FACTOR, CP" to determine 1A Hydrogen Recombiner Power Setting.

1A: _____ x _____ = _____
"1A REFERENCE POWER" "PRESSURE FACTOR, CP" 1A Power Setting

__ c. Record "1A POWER SETTING" _____.

SYS033 A1.02 - Spent Fuel Pool Cooling System (SFPCS)
Ability to predict and/or monitor changes in parameters (to prevent exceeding design limits) associated with Spent Fuel Pool Cooling System operating the controls including: (CFR: 41.5 / 45.5)
Radiation monitoring systems .....

Given the following events and conditions associated with the Unit 1 SFP:

- A Lo-Lo alarm is received for OAC point M1A0004 (SFP Level)
- The operators read (-)2.1 ft SFP level and steady on the main control board
- The operating KF pump has tripped
- An NEO reports a large leak in the auxiliary building but the leak has now slowed to a trickle

For the event described above the leak must be associated with the KF pump __(1)__ piping and __(2)__ would be utilized to monitor increasing radiation levels associated with the loss of SFP level.

Which ONE (1) of the following completes the statement above?

A. 1. discharge
   2. 1EMF-42 (U-1 Spent Fuel Bldg Vent)

B. 1. discharge
   2. 1EMF-17 (Spent Fuel Bldg Refuel Brdg)

C. 1. suction
   2. 1EMF-42 (U-1 Spent Fuel Bldg Vent)

D. 1. suction
   2. 1EMF-17 (Spent Fuel Bldg Refuel Brdg)

General Discussion

In the scenario described in the stem of this question, the indication provided would be consistent with a SFP cooling system leak associated with the discharge piping. The design of the piping is such that the hole drilled in the discharge piping located 2 feet below the normal level (Indication of 0 feet) act as a siphon breaker. With the pump tripped, this type of leak should slow to a trickle once level goes below this value.

1EMF-17 is an area monitor located on the refueling bridge and would be the most direct indication of any increase in rad levels associated with the falling SFP level. 1EMF-42 uses a beta gas detector which monitors the SFP ventilation rad levels. However, 1EMF-42 is designed to detect fuel failure based on the release of fission product gases. 1EMF-42 is located in the ventilation ducting in another building from the SFP and is shielded from background radiation. For the scenario described, there would be no effect on 1EMF-42 indication.

Answer A Discussion

INCORRECT: See explanation above.

PLAUSIBLE: Part (1) is correct and therefore plausible.

Part (2) is plausible because it does monitor radiation levels associated with the SFP building ventilation system and if the applicant misinterprets the indicated level to be low enough to cause extreme radiation level this would be a reasonable answer.

Answer B Discussion

CORRECT: See explanation above.

Answer C Discussion

INCORRECT: See explanation above.

PLAUSIBLE: Part (1) is plausible if the applicant confuses the siphon breaker location to be on the suction piping verses the discharge piping.

Part (2) is plausible because it does monitor radiation levels associated with the SFP building ventilation system and if the applicant misinterprets the indicated level to be low enough to cause extreme radiation level this would be a reasonable answer.

Answer D Discussion

INCORRECT: See explanation above.

PLAUSIBLE: Part (1) is plausible if the applicant confuses the siphon breaker location to be on the suction piping verses the discharge piping.

Part (2) is correct and therefore plausible.

Basis for meeting the KA

There is no direct correlation between the ability to monitor Radiation Monitor System parameters to "prevent exceeding design limits" associated with the Spent Fuel Pool Cooling System. However, for this particular question the applicant is asked to evaluate a given set of conditions and predict the minimum design SFP level which would be expected if leak developed on the discharge piping for the Spent Fuel Pool cooling pump. Additionally, the applicant is asked to identify which EMF could be used to verify the presence of a leak and that the leak has stopped. For example, in addition to the fact that SFP level has stopped decreasing, the Operator could use 1EMF-17 as rad monitor indication would initially increase due to lowering SFP level and then stop increasing when the leak stops).

Basis for Hi Cog

This is a hi cog question because it involves a level of analysis of given situation, apply system knowledge and solve a problem.

Basis for SRO only

Job Level	Cognitive Level	QuestionType	Question Source
RO	Comprehension	BANK	Bank MNS FHKFN01

Development References

Lesson Plan OP-MC-FH-KF Page 27 (Rev 30)

OP-MC-FH-KF Obj. 7

Student References Provided

SYS033 A1.02 - Spent Fuel Pool Cooling System (SFPCS)

Ability to predict and/or monitor changes in parameters (to prevent exceeding design limits) associated with Spent Fuel Pool Cooling System

operating the controls including: (CFR: 41.5 / 45.5)

ıdiation monitoring systems .....

401-9 Comments:

Remarks/Status
401-9 Comments: The distractor analysis said 1EMF-42 will have little to no effect. If "A" is marginally correct then it can be arguably correct. Therefore, 2 potentially correct answers exist. This must be re-evaluated. This Q is U until resolved due to 2 possible correct answers. ---------- Resolution / Comments: The discussion should have stated that 1EMF-42 will have "no effect" instead of "little to no effect". This event would be dealt with via entry into AP-41 (Loss of Spent Fuel Pool Cooling or Level). An alarm on 1EMF-17 is one of the symptoms that prompts entry into AP-41. There is plausibility for 1EMF-42 in that an alarm on this monitor would prompt entry into AP-25 (Spent Fuel Damage). However, 1EMF-42 is a beta gas monitor and will only respond if there is damage to the fuel in the SFP. Revised the discussion and distracter analysis for A2 and C2. See attached file for proposed changes to the discussion and distracter analysis.

Question 35 References:

OP-MC-FH-KF Obj. 12

OBJECTIVES

	OBJECTIVE	NLO	NLOR	LPRO	LPSO	LOR
1	State the purpose of the Spent Fuel Pool Cooling System.	X	X	X	X	
2	Draw a simplified diagram of the Spent Fuel Pool Cooling System (including all major components) per Training Drawing 7.1, Spent Fuel Pool Cooling System - Simplified.	X	X	X	X	
3	State the flowrates through each of the following flowpaths: • Spent Fuel Pool Cooling Loop • Spent Fuel Pool Purification Loop • Spent Fuel Pool Skimmer Loop	X	X	X	X	
4	List the sources of makeup to the Spent Fuel Pool Cooling System; including the source grade (i.e., borated, non-borated demineralized, and non-borated lake water).	X	X	X	X	
5	Explain the conditions which would require *"assured makeup"*, from the Nuclear Service Water System, to the Spent Fuel Pool Cooling System.	X	X	X	X	X
6	List the power supply for the following Spent Fuel Pool Cooling System Pumps (Unit 1 and Unit 2): • KF Pump(s) • KF Skimmer Pump(s)	X	X	X	X	
7	Describe the controls, indications, and/or alarms, associated with Spent Fuel Pool Cooling System operation, located <u>within</u> the <u>Control Room</u>.			X	X	X
8	Describe how the KF Pump motor(s) is cooled during system operation.	X	X	X	X	
9	State the cooling medium for the Spent Fuel Pool Cooling System Heat Exchanger(s).	X	X	X	X	
10	Describe the controls, indications, and/or alarms, associated with Spent Fuel Pool Cooling System operation, located <u>outside</u> the <u>Control Room</u>.	X	X	X	X	

From Lesson Plan OP-MC-FH-KF Page 27 (Rev 30)

The Spent Fuel Pool stores fuel assemblies approximately 33 feet 4 inches below the fuel pool operating deck with approximately 25 feet of borated water above the top of each fuel assembly.

Objective # 7

Control Room Indication is provided for Spent Fuel Level and Temperature. *(Refer to Training Drawing 7.3, Spent Fuel Pool Control Room Indication.)*

In each of the Spent Fuel Pools and refueling cavities there is an Aztec Level Gauge. The angle iron pointing out into the water is at elevation 771' 4¾". This is the normal design level and corresponds to "0" on the gauge in the Control Room. Each step on the side edge of the gauge is two inches. (Refer to picture 7.5)

2.2 Spent Fuel Pool Cooling Pumps

Objective # 7

Two Spent Fuel Pool Cooling Pumps (KF Pumps) are provided for each Unit. The controls and indications, associated with Spent Fuel Pool Cooling Pump operation, located on the Main Control Board (MC-11), consist of the following:

* START / STOP Control Switch

  These momentary START / STOP pushbuttons allow the operator to START and STOP the pump, as desired.

  During a Blackout the KF Pump(s) will initially lose power *(load shed)* but receive a *manual start permissive* when Load Group 9 is loaded onto the bus.

  During a Safety Injection Signal, the KF Pump(s) running prior to SI will continue to run. The KF Pump(s) *not running*, prior to SI, will receive a *manual start permissive* when Load Group 9 is loaded onto the bus.

  Any KF Pump(s) running or manually started, while the SI Signal is present, **cannot** be stopped until the *SI Signal is RESET*.

* ON / OFF (Red / Green) Indicating Lights

  These ON / OFF (Red / Green) indicating lights are mounted on the START / STOP Control Switch and provide indication when the KF Pump breaker is CLOSED (ON) or OPEN (OFF).

Typical flow through the heat exchanger and purification loop is 2500 gpm combined (approximately 2200 gpm through Hx and 300 gpm through purification). Each pump is designed for 3050 gpm and limited by procedure to 2900 gpm, and each takes suction from the Spent Fuel Pool, *four feet below pool level,* and discharge back into the Spent Fuel Pool, *six feet above the fuel assemblies.* Holes drilled into the Spent Fuel Pool Discharge Header act as a vacuum breaker and limit siphon draining to two feet below normal Spent Fuel Pool level.

From Lesson Plan OP-MC-FH-KF Page 53 (Rev 30)

Abnormal Operating Procedure AP/1(2)/A/5500/25, Spent Fuel Damage, is provided to identify operator actions required during a spent fuel damage event. Actions are defined for spent fuel damage inside Containment or within the Spent Fuel Pool. This procedure has only a single Case and the Symptoms are:

* EMF-36, Unit Vent High Gas Radiation Alarm (Process Monitor)
    * EMF-38, Containment High Particulate Radiation Alarm (Process Monitor)
    * EMF-39, Containment High Gas Radiation Alarm (Process Monitor)
    * EMF-40, Containment High Iodine Radiation Alarm (Process Monitor)
    * EMF-42, Fuel Handling High Gas Radiation Alarm (Process Monitor)
    * EMF-16, Containment Refueling Bridge Alarm (Area Monitor)
    * EMF-17, Spent Fuel Building Bridge Alarm (Area Monitor)
    * Gas bubbles originating from the damaged assembly(ies).
    * Visual evidence of damage with potential of radioactive release(s).

Subsequent operator action(s) will first determine the damaged fuel location. The area affected (Containment or the Spent Fuel Pool) must be evacuated and isolated. Those personnel evacuated must be assembled for accountability while remote action(s) are performed to further secure the event to ON-SITE. In addition, the event must be classified and implementation of the Emergency Plan initiated, if required.

Parent Question

Question 375 FHKFN01 FHKFN01

1 Pt(s) Unit 1 is operating at 100% power when the OAC registers a low spent fuel pool level alarm. Given the following events and conditions:

* The operators read -2.1 ft SFP level and steady on the main control board.
* The operating KF pump has tripped.
* An NLO reports a large leak in the auxiliary building.
* Normal SFP makeup is not available.

Which one of the following statements correctly describes the corrective action for this event?

A. Find and isolate the leak on the KF discharge piping.

B. Find and isolate the leak on the KF suction piping.

C. Initiate assured makeup due a leak on the discharge piping.

D. Initiate assured makeup due to a leak on the suction piping.

SYS035 K1.01 - Steam Generator System (S/GS)
Knowledge of the physical connections and/or cause-effect relationships between the S/GS and the following systems: (CFR: 41.2 to 41.9 / 45.7 to 45.8)
MFW/AFW systems .....

Given the following conditions on Unit 1:

- A unit shutdown is in progress
- Operators have blocked the CA Auto-Start signal
- At 0200 both Main Feed Pumps trip

Given the following plant conditions and times:

	Time				
Condition	**0200**	**0205**	**0210**	**0215**	**0220**
Tave (°F)	551	552	552	553	554
NC Press. (PSIG)	1951	1953	1958	1951	1957
NR SG A (%)	24	16	25	18	10
NR SG B (%)	26	18	22	14	9
NR SG C (%)	28	20	26	13	8
NR SG D (%)	23	15	16	19	9

Which ONE (1) of the following lists the EARLIEST time that the Turbine Driven CA pump would have automatically started?

A. 0205

B. 0210

C. 0215

D. 0220

General Discussion

The Turbine Driven CA Pump will auto-start when NR level on any two SGs decreases to less than 17%. For the conditions given, the Turbine Driven CA Pump will auto-start at 0205.

Answer A Discussion

CORRECT: See explanation above.

Answer B Discussion

INCORRECT: See explanation above.

PLAUSIBLE: This answer is plausible if the applicant concludes that NC system pressure must increase above the P-11 setpoint to automatically unblock the CA Auto-Start Defeat AND also believes that only one SG less than 17% is required to generate a TD CA pump auto-start. However, the Auto-Start Defeat only applies to the MD CA pumps, not the TD CA pump.

Answer C Discussion

INCORRECT: See explanation above.

PLAUSIBLE: This answer is plausible if the applicant concludes that NC system pressure must increase above the P-11 setpoint to automatically unblock the CA Auto-Start Defeat since two of the SG NR levels are less than the 17% level required for a TD CA pump auto-start. However, the Auto-Start Defeat only applies to the MD CA pumps, not the TD CA pump.

Answer D Discussion

INCORRECT: See explanation above.

PLAUSIBLE: This answer is plausible if the applicant concludes that NC system pressure must increase above the P-11 setpoint to automatically unblock the CA Auto-Start Defeat AND that all four SG NR levels must be less than 17% to generate a TD CA pump auto-start signal. However, the Auto-Start Defeat only applies to the MD CA pumps, not the TD CA pump.

Basis for meeting the KA

The KA is matched because the applicant must understand the cause-effect relationship between SG level and the auto-start signals generated for the AFW (CA) system.

Basis for Hi Cog

This is a higher cognitive level question because the applicant must associate multiple pieces of information to arrive at the correct answer. First, the applicant must recall from memory the coincidence and setpoint for the TD CA pump start and the effect of the CA Auto-Start Defeat on CA pump operation (MD CA pumps only). Then, the applicant must compare the information given in the table to the setpoint and coincidence recalled from memory to determine the correct answer. Since this question requires more than one mental step to arrive at the correct answer, it is a higher cognitive level question.

Basis for SRO only

Job Level	Cognitive Level	QuestionType	Question Source
RO	Comprehension	BANK	MNS Exam Bank Question #CFCAN010

Development References	Student References Provided
Lesson Plan OP-MC-CF-CA Section 2.2 Learning Objective OP-MC-CF-CA #4	

SYS035 K1.01 - Steam Generator System (S/GS)

Knowledge of the physical connections and/or cause-effect relationships between the S/GS and the following systems: (CFR: 41.2 to 41.9 / 45.7 to 45.8)

MFW/AFW systems .....

401-9 Comments:	Remarks/Status
	401-9 Comments: No comment. ---------- ---------- Resolution / Comments:

N/A

Parent Question:

CFCAN010
1 Pt

During a plant shutdown on Unit 1, the operators have blocked the CA auto-start signal by depressing the auto-start defeat switch. A subsequent loss of both main feedwater pumps occurred at 0200.

Given the following plant conditions at the times listed:

	Condition	Time 0200	0205	0210	0215	0220
1)	Tave (°F)	551	552	552	553	554
2)	NCS pressure (psig)	1951	1953	1958	1951	1957
3)	NR SG A (%)	24	16	25	18	10
4)	NR SG B (%)	26	18	22	14	9
5)	NR SG C (%)	28	20	26	13	8
6)	NR SG D (%)	23	15	16	19	9

What time would the Turbine Driven CA Pump start automatically?

A. 0205

B. 0210

C. 0215

D. 0220

Answer 938

A

Objective 4

SYS045 K5.23 - Main Turbine Generator (MT/G) System

nowledge of the operational implications of the following concepts as the apply to the MT/B System: (CFR: 41.5 / 45.7)

elationship between rod control and RCS boron concentration during T/G load increases .....

Given the following conditions on Unit 1:

- Reactor Power is currently being increased from 55% to 90% RTP at 3%/hr following a Refueling Outage

1. How is the withdrawal of control rods affected?

2. What changes (if any) to NCS boron concentration will be required?

REFERENCE PROVIDED

A. 1. NOT restricted
   2. Dilution is required.

B. 1. NOT restricted
   2. Dilution is NOT required.

C. 1. Restricted
   2. Dilution is required.

D. 1. Restricted
   2. Dilution is NOT required.

General Discussion

With conditions given, the plant is above the conditioned power level therefore above 40% RTP, rod withdrawal is restricted to less than 3 steps per hour per the rod maneuvering limit guidance in the U-1 Data book. This restriction on Rod movements would result in additional dilutions required to compensate for the negative reactivity associated with power defect during the power escalation.

Answer A Discussion

INCORRECT: See explanation above.

PLAUSIBLE: Part 1 is plausible if the applicant does not recall the effect of unconditioned fuel on rod movement. The applicant may conclude based on plant conditions that there is no restriction on control rod movement under the conditions given.

Part 2 of the question is correct and therefore plausible.

Answer B Discussion

INCORRECT: See explanation above.

PLAUSIBLE: Part 1 is plausible if the applicant does not recall the effect of unconditioned fuel on rod movement. The applicant may conclude based on plant conditions that there is no restriction on control rod movement under the conditions given.

Part 2 is plausible if the applicant confuses the effect of Xenon in the scenario described in the stem. On a power escalation after a runback, Xenon would burning out and adding positive reactivity.

Answer C Discussion

CORRECT: See explanation above.

Answer D Discussion

INCORRECT: See explanation above.

PLAUSIBLE: Part 1 is correct and therefore plausible.

rt 2 is plausible if the applicant confuses the effect of Xenon in the scenario described in the stem. On a power escalation after a runback, enon would burning out and adding positive reactivity.

Basis for meeting the KA

This K/A is matched because the question is relating the effect of a T/G load increase during an initial power escalation with unconditioned fuel. The applicant must evaluate how this would affect the relationship between Rod control and RCS boron concentration due to the limitations imposed on rod movement.

Basis for Hi Cog

This is a hi cog question because it involves a level of analysis of given situation, apply system knowledge and solve a problem of what both would be the effect and how the conditions given in the stem would affect operation. It also requires more than one mental step to arrive at the correct answer and is therefore a higher cognitive level question.

Basis for SRO only

Job Level	Cognitive Level	QuestionType	Question Source
RO	Comprehension	NEW	

Development References

Lesson Plan OP-MC-CTH-CP (Rev 11) Pages 135, 171, 173 &175

OP-MC-CTH-CP Obj: 29

Student References Provided

Data Book Sect. 1.3 Enc. 4.3

SYS045 K5.23 - Main Turbine Generator (MT/G) System

Knowledge of the operational implications of the following concepts as the apply to the MT/B System: (CFR: 41.5 / 45.7)

Relationship between rod control and RCS boron concentration during T/G load increases .....

01-9 Comments:

Remarks/Status

401-9 Comments:

Of the 4 bullets: I think you can delete all but the second bullet.

QUESTION 37

2537

C

In Stem 1. add "at 3% per hr"
In C1 and D1 state "Control rod withdrawal is restricted.
In A1 and B1 cap the word "NOT"
Change B2 and D2 to "No dilution will be required because Xenon burnout will compensate for the power defect"

Resolution / Comments:

Deleted last two bullets. You need the first two bullets as a minimum. Made the rest of changes as recommended by Lead Examiner. See attached file for proposed revision to question.

Question 37 References:

SEQ	OBJECTIVE	NLO	NLOR	LPRO	LPSO	LOR
26	Given a set of plant parameters and/or system conditions, associated with the recovery of a misaligned / dropped rod, determine the appropriate recovery limits. CTHCP026		X	X	X	X
27	Given a set of plant parameters or system conditions, associated with the recovery of a misaligned / dropped rod, discuss the basis for the appropriate recovery limits. CTHCP027		X	X	X	X
28	Discuss the basis for the Fuel Maneuvering Limits. CTHCP028		X	X	X	X
29	Given the Fuel Maneuvering Limits, evaluate a given set of plant conditions and determine the allowable loading / rod withdrawal rates. CTHCP029		X	X	X	X
30	Concerning the Technical Specifications related to Control Bank Insertion Limits, AFD, QPTR, and RCS Pressure, Temperature, and Flow DNB Limits:					
	• Given the LCO title, state the LCO (including any COLR values) and applicability.			X	X	X
	• State the REQUIRED ACTION(s) and COMPLETION TIME for action(s) with completion times of one hour or less.			X	X	X
	• Given a set of parameter values or system conditions, determine if any Technical Specification LCO(s) is (are) not met and any action(s) required within one hour.			X	X	X
	• Given a set of plant parameters or system conditions and the appropriate Technical Specification(s), determine the REQUIRED ACTION(s) and COMPLETION TIME(s).			X	X	X
	• Discuss the bases for a given Technical Specification LCO. CTHCP030			X	X	X

From Lesson Plan OP-MC-CTH-CP Pg. 135 (Rev 11)

POWER LEVEL

Increasing reactor power (steam demand) results in two changes, one direct and one indirect, which affect power distribution:

Redistribution (Direct Effect)

Control Rod Movement (Indirect Effect)

The first effect is the result of the variation in core ΔT with Reactor Power Level. As power is increased with turbine load, the core ΔT will rise from almost 0oF at zero power to 58oF at full power. As a result the moderator in the upper portions of the core becomes progressively warmer and less dense relative to the bottom. The increasing density difference will force power toward the bottom of the core as evidenced by AFD becoming more negative . The strength of this "redistribution" effect is dependent on the value of the moderator temperature coefficient (MTC). At BOC when the MTC is small and negative, the redistribution effect is small. As the MTC becomes more negative with Burnup, the redistribution effect will become more pronounced.

The second (indirect effect) is caused by the movement of control rods necessary to compensate, in part, for the power defect. As power is raised positive reactivity must be added in order to compensate for the negative reactivity associated with the power defect. Any rod withdrawal will tend to allow more power to be produced in the upper portions of the core, resulting in a tendency for AFD to become more positive.

In practice the control rods are moved as necessary to offset the redistribution effect thereby maintaining a relatively constant axial power distribution. This is accomplished by coordinating reactor coolant boron concentration with rod position as necessary to maintain AFD on Target during the power escalation.

From Lesson Plan OP-MC-CTH-CP Pg. 171,173 & 175 (Rev 11)

3.3 Fuel Maneuvering Limits

Objective # 28

The Fuel Maneuvering Limits apply to power increases ONLY. These maneuvering limits are tied to REACTOR POWER not Turbine or Generator Power.

These limits are based on limiting or preventing PCI *(Pellet-Clad Interaction).* The primary concern is centered around previously used fuel and not new *(fresh)* fuel. Handling "burned" fuel, coupled with the fact that "burned" fuel has experienced fuel pellet cracking, can result in the movement of small pellet fragments. A gradual controlled increase in power will allow pellet and cladding expansion to somewhat equalize, as the fuel and cladding heat up.

Objective # 29

Fuel Maneuvering Limits

POWER RAMP RESTRICTIONS

Recommended ramp = 3% / hour, CPL – 100% FP

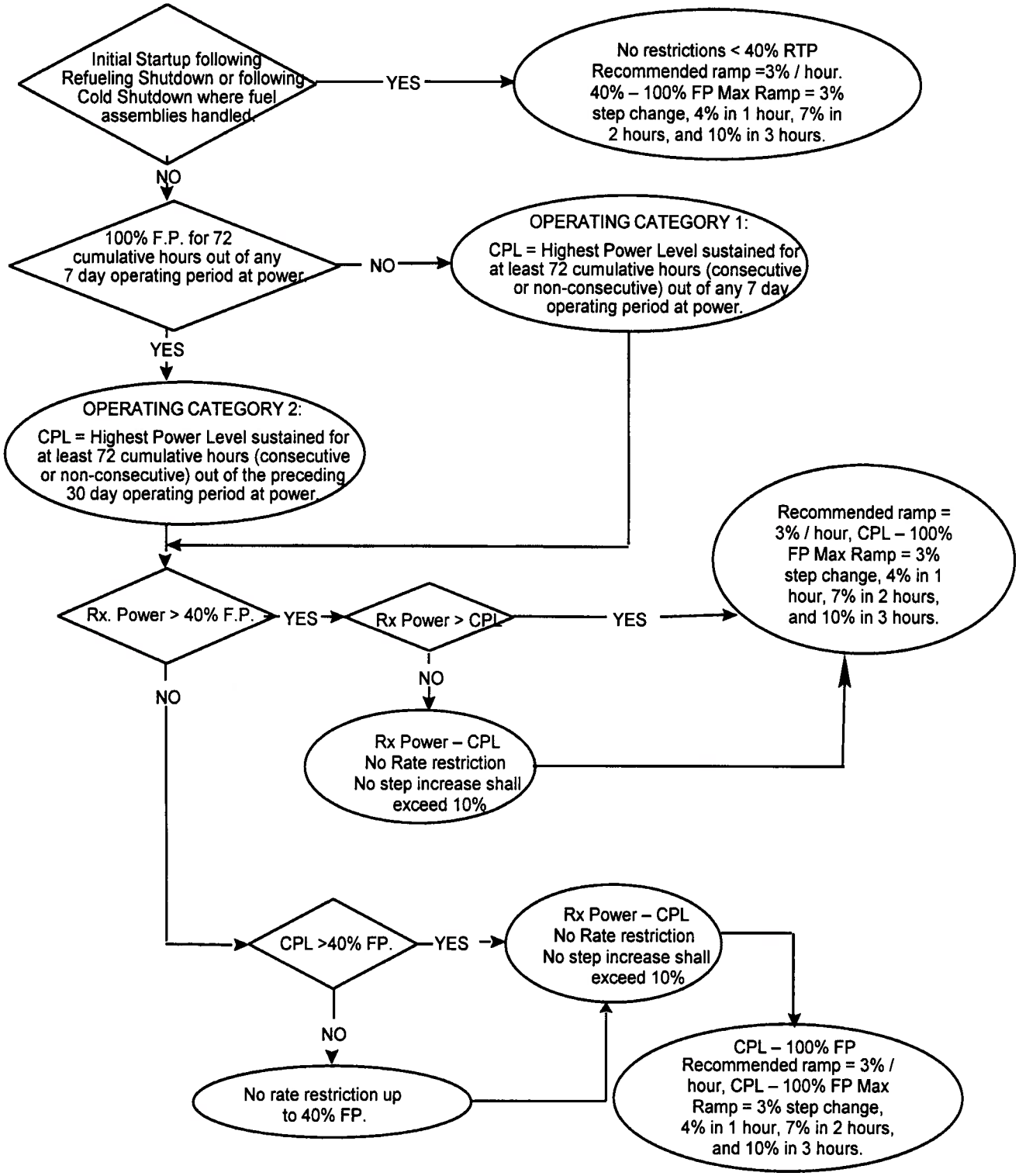

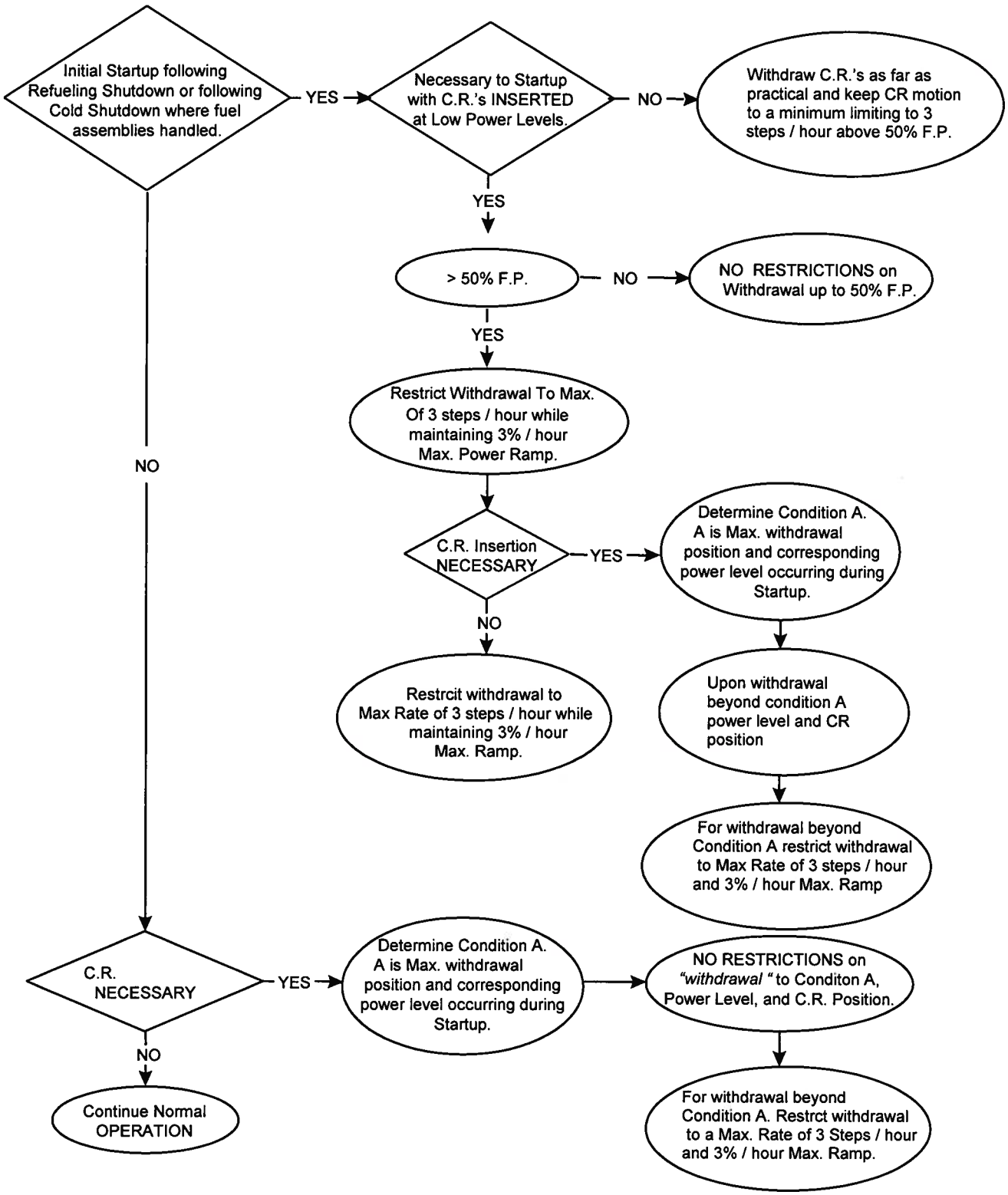
Initial Startup following Refueling Shutdown or following Cold Shutdown where fuel assemblies handled.
YES
Necessary to Startup with C.R.'s INSERTED at Low Power Levels.
NO
Withdraw C.R.'s as far as practical and keep CR motion to a minimum limiting to 3 steps / hour above 50% F.P.
YES
> 50% F.P.
NO
NO RESTRICTIONS on Withdrawal up to 50% F.P.
YES
Restrict Withdrawal To Max. Of 3 steps / hour while maintaining 3% / hour Max. Power Ramp.
NO
C.R. Insertion NECESSARY
YES
Determine Condition A. A is Max. withdrawal position and corresponding power level occurring during Startup.
NO
Restrcit withdrawal to Max Rate of 3 steps / hour while maintaining 3% / hour Max. Ramp.
Upon withdrawal beyond condition A power level and CR position
For withdrawal beyond Condition A restrict withdrawal to Max Rate of 3 steps / hour and 3% / hour Max. Ramp
C.R. NECESSARY
YES
Determine Condition A. A is Max. withdrawal position and corresponding power level occurring during Startup.
NO RESTRICTIONS on "withdrawal " to Conditon A, Power Level, and C.R. Position.
NO
Continue Normal OPERATION
For withdrawal beyond Condition A. Restrct withdrawal to a Max. Rate of 3 Steps / hour and 3% / hour Max. Ramp.

SYS071 K4.06 - Waste Gas Disposal System (WGDS)
nowledge of design feature(s) and/or interlock(s) which provide for the following: (CFR: 41.7)
ampling and monitoring of waste gas release tanks .....

Given the following plant conditions:

- Waste Gas Decay Tank 'A' is aligned for planned release
- Waste Gas Decay Tank 'E' is also mistakenly aligned for release while in service
- EMF-50 (L) Waste Gas Discharge is not detecting release activity

Which ONE (1) of the following would be the result if the release exceeds expected activity levels?

A. The release is monitored by 2EMF-36(L) (Unit 2 Unit Vent Gas). However, no automatic termination will occur.

B. The release is monitored by 2EMF-36(L) which will automatically terminate the release if a Trip 2 alarm is reached.

C. The release is monitored by 1EMF-36(L) (Unit 1 Unit Vent Gas). However, no automatic termination will occur.

D. The release is monitored by 1EMF-36(L) which will automatically terminate the release if a Trip 2 alarm is reached.

General Discussion

In the conditions given, a misalignment has resulted in EMF-50 not being aligned to properly monitor the WGDT release. The WG release is monitored by two EMF's, the primary is EMF-50 and the secondary is the U-1 Unit Vent gaseous monitor 1EMF-36L. Activity detected resulting in a Trip 2 on either one of these monitors will result in a termination of the release due to the resulting auto closure of WG-160. The release will still be monitored and auto termination is still functional.

Answer A Discussion

INCORRECT: See explanation above.

PLAUSIBLE: First part is plausible if the applicant confuses 1EMF-36L and 2EMF-36L.

Second part is plausible if the applicant does not recall that the release can be terminated by the Waste Discharge monitor (EMF-50) or the Unit Vent Monitor (1EMF-36L).

Answer B Discussion

INCORRECT: See explanation above.

PLAUSIBLE: First part is plausible if the applicant confuses 1EMF-36L and 2EMF-36L.

Second part is plausible because the Unit Vent Monitor will terminate the release on a Trip 2 alarm. However, it is 1EMF-36L instead of 2EMF-36L.

Answer C Discussion

INCORRECT: See explanation above.

PLAUSIBLE: First part is plausible if the applicant confuses 1EMF-36L and 2EMF-36L.

Second part is plausible if the applicant does not recall that the release can be terminated by the Waste Discharge monitor (EMF-50) or the Unit Vent Monitor (1EMF-36L).

Answer D Discussion

CORRECT: See explanation above.

Basis for meeting the KA

This K/A is matched because the waste gas decay tank is being released and the applicant is being asked about both the design features (U-1 Vent release path) and interlocks (Action for EMF Trip 2) with regard to the monitoring capability associated with the release and the tank.

Basis for Hi Cog

Basis for SRO only

Job Level	Cognitive Level	QuestionType	Question Source
RO	Memory	BANK	MNS Q WEWGN03

Development References

Lesson Plan OP-MC-WE-WG Page 29 (Rev 12)

OP-MC-WE-WG Obj. 5

Student References Provided

SYS071 K4.06 - Waste Gas Disposal System (WGDS)
Knowledge of design feature(s) and/or interlock(s) which provide for the following: (CFR: 41.7)
Sampling and monitoring of waste gas release tanks .....

401-9 Comments:

Remarks/Status

401-9 Comments:

Distrsactors A and B are NP because there is no case where an isolation will not occur without a malfunction. Replace A and B. This Q is U because of 2 NP distractors.

SYS078 A4.01 - Instrument Air System (IAS)
bility to manually operate and/or monitor in the control room: (CFR: 41.7 / 45.5 to 45.8)
Pressure gauges .....

Due to a leak on the VI system the following indications were observed:

- 1AD-12 C1 (VI/VS Lo Pressure) is LIT
- 0VIP-5090 (VI/VS Press) dropped to a lowest reading of 86 PSIG and is now 89 PSIG and increasing

Which ONE (1) of the following describes automatic actions which have occurred as a result of the indicated pressure transient?

A. G and H VI Compressors auto-started ONLY.

B. 1VI-820 (VI to VS Supply) auto-closed ONLY.

C. 1VI-820 auto-closed AND 1VI-1812 (VI Dryer Bypass Vlv) has auto-opened.

D. G and H VI Compressors auto-started AND 1VI-820 (VI to VS Supply) auto-closed.

General Discussion

At a decreasing VI pressure of 90 PSIG the following actions occur:
1VI-820 (VI to VS Supply) Auto closes
G and H Compressors (Diesel VI compressors) Auto Start
If VI pressure continues to decrease to 85 PSIG, 1VI-1812 (VI Dryer Bypass) will OPEN.

Answer A Discussion

INCORRECT: See explanation above.

PLAUSIBLE: This answer is plausible because this action would have occurred but is not complete. Answer is incomplete and incorrect due to the ONLY designation.

Answer B Discussion

INCORRECT: See explanation above.

PLAUSIBLE: This answer is plausible because this action would have occurred but is not complete. Answer is not complete and is incorrect due to the ONLY designation.

Answer C Discussion

INCORRECT: See explanation above.

PLAUSIBLE: This answer is plausible because the applicant may conclude that 1VI-1812 actuates with the other components at 90 PSIG. The first part is correct.

Answer D Discussion

CORRECT: See explanation above.

Basis for meeting the KA

KA is matched because the candidate, given information obtained from monitoring a trend of VI pressure indications located in the control room, what automatic actions have occurred associated with the Instrument Air system.

Basis for Hi Cog

This is an analysis level question because the applicant must evaluate a given set of plant conditions, must recall a setpoint from memory, and then compare the plant conditions to the recalled memory to eliminate distracters and determine if a set of automatic actions should have occurred.

Basis for SRO only

Job Level	Cognitive Level	QuestionType	Question Source
RO	Comprehension	BANK	MNS (Bank 2227)

Development References

Lesson Plan OP-MC-SS-VI Objective 7 Section 1.2.10 page 67 and Objective 2 Section 1.3.1 page 89

ARP for 1AD-12 C1 (VI/VS Low pressure)

Student References Provided

SYS078 A4.01 - Instrument Air System (IAS)
Ability to manually operate and/or monitor in the control room: (CFR: 41.7 / 45.5 to 45.8)
Pressure gauges .....

401-9 Comments:

Remarks/Status

401-9 Comments:

No comment.

Resolution / Comments:

N/A

Question 26 References:

	OBJECTIVE	NLO	NLOR	LPRO	LPSO	LOR
6	Explain the control function associated with each of the following VI Air Compressor (A, B, and C) pushbuttons: • Start/Stop pushbutton • Reset pushbutton	X	X	X	X	
7	List the interlocks / trips associated with operation of the following plant air system components: • VI Air Compressors • VI-820 (VI to VS Supply Valve) • VS Low Pressure Air Compressor • VB Air Compressor	X	X	X	X	X
8	Describe the following controls and/or indications associated with operation of VI Air Compressors D, E, and F: • On/Off switch and indication • Start/Stop pushbuttons • Pre-lube pump status • Acknowledge/Reset pushbutton	X	X	X	X	
9	Describe how the following VI System components function to provide a continuous supply of clean dry air: • Service Building Air Receiver Tanks (and drains) • Air Dryers • Auxiliary Building Instrument Air Tanks	X	X	X	X	
10	Explain each one of the following controls and /or indications, associated with the Breathing Air Compressors: • Start/Stop Pushbutton • "Power ON" Light • "RUN" Light • Discharge Air Over-Temperature Light • Rotor Oil Filter Service Light • Bearing Oil Filter Service Light • Air/Oil Separator Service Light • Service Air Filter ΔP Gauge • Purification Filter ΔP Gauge • Rotor Coolant Temperature Gauge • Discharge Air Pressure Gauge • Discharge Air Temperature Gauge	X	X	X	X	
11	Describe normal operation of the Breathing Air	X	X	X	X	X

	Compressor(s).					

From Lesson Plan OP-MC-SS-VI Pg 71 (Rev 33)

The VI System normally supplies the Low Pressure VS System through control valve 1VI-820.

Controls and indication for 1VI-820 are located at the VI Sequencer Control Panel. The valve control switch is a three position switch:

- Close
    - Auto
    - Open

Objective # 7

Indication provided at the VI Sequencer Control Panel consists of the following:

- 1VI-820 Close (green light)
- 1VI-820 Open (red light)

This valve is normally in the AUTO position and will automatically close should VI System Pressure decrease to <90 psig. Upon valve closure 1VI-820 can be reopened once VI System Pressure has increased >90 psig by placing the valve to the OPEN position. After opening the valve 1VI-820, the switch should be returned to the AUTO position. If not, the valve will reopen without operator action, after closure, as soon as pressure has increased above 90 psig.

1.2.13 VI System Air Dryers A, B, and C

Objective # 9

VI Dryers A, B, and C (AMLOC-CHA Dryers) are fully automatic, desiccant-type air dryers designed to remove vaporous moisture from the Instrument Air System. Generally, two of the three desiccant air dryers (A, B, and C) are in-service while one remains in standby, ready and available for service when needed. Each in-service dryer will alternately cycle air through one of the two desiccant chambers for moisture removal, while the other chamber is regenerated (removal of previously adsorbed moisture) and re-pressurized.

From Lesson Plan OP-MC-SS-VI Pg 75 (Rev 33)

Purge Dump Restrictor

Closes during dump and limits gas flow to prevent fluidization by controlling the rate of depressurization. Opens fully during all other periods.

Dryer System Bypass Valve

1VI-1812 is installed between the Dryer System Manual Bypass Valves 1VI-093 and 1VI-094. This valve is designed to fail open on a loss of power or loss of air. Valves 1VI-093 and 1VI-094 will be normally open while 1VI1812 will be normally closed. A solenoid operator associated with valve 1VI-1812 is connected to pressure switch 0VIPS5381. The solenoid is set to vent the actuator upon receipt of a VI System Low Pressure signal (85#). The pressure switch 0VIPS5381 is connected to the instrument loop 0VIPS5380, which currently controls the dryer Purge Exhaust Isolation Valves (1VI-1838, 1VI-1839, and 1VI-1840) which fail closed on a low pressure signal. 0VIPS5381 sends a signal to the REFLASH Panel such that an alarm in the Control Room will indicate a VI Dryer Panel Trouble. There is local indication of valve position, RESET and OVERRIDE capabilities provided at the Reflash Panel. By depressing RESET, 1VI-1812 will close, and by depressing OVERRIDE, 1VI-1812 can be manually opened.

1VI-1812 is designed to automatically open and bypass the VI Dryers in the event of sudden blockage of flow due to some dryer malfunction. The PRA Study identified VI Dryer malfunctions as a primary contributor to Loss of VI event probability. The manual bypass valves (1VI-093 and 1VI-094) cannot protect against sudden dryer flow blockage events (e. g. switching valve failure). A filter is installed at the inlet of 1VI-1812 to prevent the potential of substantial contamination of the normally dry VI headers with rust known to exist in the wet VI headers.

Instruments and Their Basic Function

The A, B, and C VI Dryers are equipped with a set of gauges to indicate inlet air pressure, outlet air pressure, purge flow, and chamber pressure. The gauges are provided to monitor system operation. The gauges on the chamber indicate which chamber is on-stream (the gauge on the off-stream chamber should indicate zero (0) PSIG). The gauges are also used to verify that the internal pressure has been completely vented to the atmosphere when servicing is required. **All pressure gauges should indicate zero (0) PSIG before any service work is performed on the dryer.**

Additional instruments include:

- **Chamber pressure relief valves.**

Provide chamber protection if high pressure should develop during dryer operation. Set to relieve at design pressure.

- **Chamber Pressure Sensors**

Set to sense the lack or presence of chamber pressure following repressurization or depressurization.

From Lesson Plan OP-MC-SS-VI Pg 67 (Rev 33)

Objective # 4

The Diesel VI Compressors operate in two modes of operation. These modes are Automatic and Manual. In the Manual Mode of operation, an operator will start and run the compressor using controls on the compressor control panel located at the compressors themselves. For a manual start of the compressor to be accomplished, the following must be true:

- The AUTO/OFF-RESET switch must be selected to the OFF-RESET position
- The START/WARM-UP/RUN switch is in the WARM-UP Position
- The HIGH/LOW switch is selected to the desired position (normally HIGH)

The operator then rotates the Engine Switch from the OFF position to the ON position and the compressor should start. Once the compressor has started and has warmed up, the operator can select the RUN position on the START/WARM-UP/RUN selector switch to allow the compressor to load. If the operator is starting the compressor as directed from the Loss of Instrument Air System Abnormal Procedure, the AP directs the operator to leave the START/WARM-UP/RUN switch in the RUN position to allow for immediate loading.

The following is a set of conditions, which will allow the Diesel VI Compressors to automatically start:

- The AUTO/OFF-RESET switch must be selected to AUTO
- The START/WARM-UP/RUN switch is selected to RUN
- The HIGH/LOW switch is selected to HIGH
- The Latching Relay picks up

The compressor will automatically start and load to the desired pressure.

Objective # 7

There are three signals, which will send an AUTO START signal to the Diesel Powered VI Compressors. These signals are:

- Loss of VI header pressure as measured by 0VIPS5070
  - set at 90 psig decreasing
  - Compressor control can be regained when pressure increases above 95 psig
- Loss of 3/3 KR flow to the D, E, and F VI Compressors
- Loss of power to the VI Sequencer Panel (SKU#43) 1SLXD/2SLXD-SMXU

MNS Bank Question 2227:

Due to a leak on the VI system the Unit 1 OATC observes the following indications:

- 1AD-12 C1 (VI/VS Lo Pressure) is LIT
- 0VIP-5090 (VI/VS Press) dropped to a lowest reading of 86 PSIG and is now 89 PSIG and increasing

Which ONE (1) of the following describes automatic actions which have occurred as a result of the indicated pressure transient?

A. G and H VI Compressors Auto Started ONLY

B. 1VI-820 (VI to VS Supply) Auto Closed ONLY

C. 1VI-820 Auto Closed AND 1VI-1812 (VI Dryer Bypass Vlv) has Auto Opened

D. G and H VI Compressors Auto Started AND 1VI-820 (VI to VS Supply) Auto Closed

---

ANSWER: D

SYS078 K3.02 - Instrument Air System (IAS)
Knowledge of the effect that a loss or malfunction of the IAS will have on the following: (CFR: 41.7 / 45.6)
Systems having pneumatic valves and controls .....

Given the following:

- Unit 1 is operating at 100% RTP when a loss of VI event occurs
- AP-22 (Loss of VI) has been implemented
- VI header pressure is 55 PSIG and decreasing

Which ONE (1) of the following system effects would be the FIRST to require the crew to trip the reactor in accordance with AP-22?

A. Decreasing S/G levels

B. Loss of RN supply to Containment

C. Loss of NC pump seal leakoff to the VCT

D. PZR level approaching the High Level Trip setpoint

General Discussion

The CF control valves use 0 - 60# valve operating air. Depending on the nature of the problem with VI and considering line losses, etc., these valves could start failing at 70# or more VI pressure as indicated in the control room. The operating philosophy regarding loss of Main Feedwater at power is to trip the reactor. This will prevent challenging the Lo-Lo S/G automatic reactor trip and will result in better initial conditions at the time of the manual trip. If the CF valves were to get to less than 25% open (for 30 sec or more) on 3 out of 4 S/Gs, an AMSAC could also be generated. For most scenarios, it's likely the operator will have manually tripped the reactor prior to this occurring.

Answer A Discussion

CORRECT: See explanation above.

Answer B Discussion

INCORRECT: See explanation above.

PLAUSIBLE: 1RN-252B does fail closed which would result in a loss of NSW cooling to the U-1 NCP's. This is a significant operational concern and left in this condition would result in the need to trip the reactor and secure the NCP's. It is therefore plausible but incorrect because this condition would not be an immediate threat.

Answer C Discussion

INCORRECT: See explanation above.

PLAUSIBLE: 1NV-34A fails open but if the applicant believes that the failure mode of this valve is closed this would result in a loss of D/P across the A NCP #1 seal and require an immediate reactor trip and pump shutdown.

Answer D Discussion

INCORRECT: See explanation above.

PLAUSIBLE: 1NV-238 does fail open which would result in maximum charging flow. This would represent a longer term operational concern but would eventually result is challenging the PZR high level trip setpoint and is therefore plausible.

Basis for meeting the KA

This K/A is address because the applicant must understand the effect of a Loss of VI will have on 4 different pneumatic valves and how this loss would affect the systems containing these components.

Basis for Hi Cog

This is a hi cog question because it involves a level of analysis of given situation, apply system knowledge and predict an outcome.

Basis for SRO only

Job Level	Cognitive Level	QuestionType	Question Source
RO	Comprehension	BANK	MNS Exam Bank Question AP22N01

Development References

AP-22 (Rev 28) Enc 12
AP-22 (Rev 28) Page 8
AP-22 Bacdground Document Page 15

OP-MC-AP-22 Obj. 5

Student References Provided

SYS078 K3.02 - Instrument Air System (IAS)
Knowledge of the effect that a loss or malfunction of the IAS will have on the following: (CFR: 41.7 / 45.6)
Systems having pneumatic valves and controls .....

401-9 Comments:

Remarks/Status

401-9 Comments:

Distractor D is a long shot and I do not believe it is plausible especially since other, more pronounced reactor trip criteria exists. Consider replacing distractor D.
D is NP.

QUESTION 27 2527 A

Resolution / Comments:

Distracter D is not the strongest distracter. However, it is possible and is therefore plausible. Would like to keep this one.

Question 27 References:

OP-MC-AP-22 Obj. 5

OBJECTIVES

	OBJECTIVE	NLO	NLOR	LPRO	LPSO	LOR
1	Concerning AP/1/A/5500/022 (Loss of VI): • State the purpose of the AP • Recognize the symptoms that would require implementation of the AP AP22001			X	X	X
2	Describe the mitigating strategies (major actions) contained in the procedure. AP22002			X	X	X
3	Given scenarios describing accident events and plant conditions, evaluate the basis for any caution, note, or step. AP22003			X	X	X
4	Given scenarios describing accident events and plant conditions, evaluate conditions which require application of continuous action steps. AP22004			X	X	X
5	State the failure modes of the components listed in AP/22, Enclosure 12 (Valve Failure Mode on Loss of Air).			X	X	X

From AP-22 Enclosure 12 pages 1 of 6

NOTE The valves listed in this enclosure fail at various air pressures.

1. **BB valves:**

   a. The following BB valves fail closed:

   __ • 1BB-1B (1A S/G Blowdown Cont Outside Isol Control)
   __ • 1BB-2B (1B S/G Blowdown Cont Outside Isol Control)
   __ • 1BB-3B (1C S/G Blowdown Cont Outside Isol Control)
   __ • 1BB-4B (1D S/G Blowdown Cont Outside Isol Control)
   __ • 1BB-5A (A S/G BB Cont Inside Isol)
   __ • 1BB-6A (B S/G BB Cont Inside Isol)
   __ • 1BB-7A (C S/G BB Cont Inside Isol)
   __ • 1BB-8A (D S/G BB Cont Inside Isol)
   __ • 1BB-123 (1A S/G Blowdown Throttle Control)
   __ • 1BB-124 (1B S/G Blowdown Throttle Control)
   __ • 1BB-125 (1C S/G Blowdown Throttle Control)
   __ • 1BB-126 (1D S/G Blowdown Throttle Control).

2. **CA valves:**

   a. The following CA valves fail open:

   __ • 1CA-60A (1A CA Pump Disch To 1A S/G Control)
   __ • 1CA-56A (1A CA Pump Disch To 1B S/G Control)
   __ • 1CA-44B (1B CA Pump Disch To 1C S/G Control)
   __ • 1CA-40B (1B CA Pump Disch To 1D S/G Control)
   __ • 1CA-64AB (U1 TD CA Pump Disch To 1A S/G Control)
   __ • 1CA-52AB (U1 TD CA Pump Disch To 1B S/G Control)
   __ • 1CA-48AB (U1 TD CA Pump Disch To 1C S/G Control)
   __ • 1CA-36AB (U1 TD CA Pump Disch To 1D S/G Control).

3. **CF valves:**

   a. The following CF valves fail closed:

   __ • 1CF-32AB (1A S/G CF Control)
   __ • 1CF-23AB (1B S/G CF Control)
   __ • 1CF-20AB (1C S/G CF Control)
   __ • 1CF-17AB (1D S/G CF Control)
   __ • 1CF-104AB (1A S/G CF Control Bypass)
   __ • 1CF-105AB (1B S/G CF Control Bypass)
   __ • 1CF-106AB (1C S/G CF Control Bypass)
   __ • 1CF-107AB (1D S/G CF Control Bypass).

From AP-22 Enclosure 12 pages 3 of 6

8. **NV valves:**

a. The following NV valves fail open:

__ • 1NV-16A (NV Supply To D NC Loop Isol)
__ • 1NV-13B (NV Supply To A NC Loop Isol)
__ • 1NV-34A (A NC Pump Seal Return Isol)
__ • 1NV-50B (B NC Pump Seal Return Isol)
__ • 1NV-66A (C NC Pump Seal Return Isol)
__ • 1NV-82B (D NC Pump Seal Return Isol)
__ • 1NV-124 (Letdown Pressure Control)
__ • 1NV-238 (Charging Line Flow Control)
__ • 1NV-241 (U1 Seal Water Inj Flow Control)
__ • 1NV-267A (Boric Acid To Blender Control).

b. The following NV valves fail to the VCT position:

__ • 1NV-27B (Excess L/D Hx Otlt 3-Way Cntrl)
__ • 1NV-127A (L/D Hx Outlet 3-Way Temp Cntrl)
__ • 1NV-137A (NC Filters Otlt 3-Way Cntrl).

c. The following NV valves fail closed:

__ • 1NV-1A (NC L/D Isol To Regen Hx)
__ • 1NV-2A (NC L/D Isol To Regen Hx)
__ • 1NV-21A (NV Spray To PZR Isol)
__ • 1NV-24B (C NC Loop To Exs L/D Hx Isol)
__ • 1NV-25B (C NC Loop To Exs L/D Hx Isol)
__ • 1NV-26B (U1 Excess L/D Hx Outlet Cntrl)
__ • 1NV-35A (Variable L/D Orifice Outlet Cont Isol)
__ • 1NV-39A (A NC Pump Standpipe Fill)
__ • 1NV-55B (B NC Pump Standpipe Fill)
__ • 1NV-71A (C NC Pump Standpipe Fill)
__ • 1NV-87B (D NC Pump Standpipe Fill)
__ • 1NV-92A (NC Pumps Seal Byp Return Hdr Isol)
__ • 1NV-121 (U1 ND Letdown Control)
__ • 1NV-167A (VCT Vent To WG Isol)
__ • 1NV-171A (BA Blender To VCT Inlet)
__ • 1NV-175A (BA Blender to VCT Outlet)
__ • 1NV-457A (45 GPM L/D Orifice Outlet Cont Isol)
__ • 1NV-458A (75 GPM L/D Orifice Outlet Cont Isol)
__ • 1NV-459 (U1 Variable L/D Orifice Outlet Flow Cntrl)
__ • 1NV-840A (U1 ND To Pzr Aux Spray Control).

From AP-22 Enclosure 12 pages 3 of 6

9. **RF valves:**

   a. The following RF valve fails closed:

   __ • 1RF-821A (Unit 1 RF Cont Outside Isol).

10. **RN valves:**

   a. The following RN valves fail open:

   __ • 1RN-89A (RN to A KC Hx Control)
   __ • 1RN-103A (A NV Pump Cooler Sup Isol)
   __ • 1RN-114A (A NI Pump Cooler Sup Isol)
   __ • 1RN-126A (A NS Pump ESS AHU Sup Isol)
   __ • 1RN-130A (A ND Pump ESS AHU Sup Isol)
   __ • 1RN-140A (A KF Pump ESS AHU Sup Isol)
   __ • 1RN-190B (RN To B KC Hx Control)
   __ • 1RN-204B (B NV Pump Cooler Sup Isol)
   __ • 1RN-215B (B NI Pump Cooler Sup Isol)
   __ • 1RN-227B (B NS Pump ESS AHU Sup Isol)
   __ • 1RN-231B (B ND Pump ESS AHU Sup Isol)
   __ • 1RN-240B (B KF Pump ESS AHU Sup Isol).

   b. The following RN valves fail closed:

   __ • 1RN-21A (1A RN Strainer Backwash Automatic Supply Isol)
   __ • 1RN-22A (1A RN Strainer Backwash Automatic Drain)
   __ • 1RN-25B (1B RN Strainer Backwash Automatic Supply Isol)
   __ • 1RN-26B (1B RN Strainer Backwash Automatic Drain)
   __ • 1RN-252B (RB Non Ess Sup Cont Outside Isol)
   __ • 1RN-277B (RB Non Ess Ret Cont Outside Isol).

11. **RV valves:**

   a. The following RV valves fail closed:

   __ • 1RV-79A (U1 VU AHUS RV Cont Outside Supply Hdr Isol)

   __ • 1RV-101A (U1 VU AHUS RV Cont Inside Return Hdr Isol)

   __ • 1RV-80B (U1 VU AHUS RV Cont Inside Supply Hdr Isol)

   __ • 1RV-102B (U1 VU AHUS RV Cont Outside Return Hdr Isol).

From AP-22 Page 8 of 121:

ACTION/EXPECTED RESPONSE	RESPONSE NOT OBTAINED

11. (Continued)

m. Control NC temperature as follows:

__ • Throttle ND flow.

NOTE
- KC to ND Hx flow should be close to flow prior to loss of VI, since it is normally controlled by motor operated valves.
- KC to ND HX flow indications fails low during a loss of VI. Alternate indications are available at the following locations, if needed:
  - 1A: 1KCFT-5670 (aux bldg, 733 +2', west of column MM-54)
  - 1B: 1KCFT-5680 (aux bldg, 733 +4', west side of column JJ-55).

__ • **IF** NC temperature is greater than 200°F, **THEN** maintain KC flow to ND Hx greater than 2000 GPM.

__ • Throttle KC Flow to ND Hx as required.

__ 12. **IF AT ANY TIME VI pressure is less than 70 PSIG, THEN align B Train RN to SNSWP PER Enclosure 7 (Aligning B Train RN to Pond).**

NOTE CF Control Valves will fail closed on low VI pressure, which may result in AMSAC actuation and Lo Lo S/G level.

__ 13. **Check S/G levels - AT PROGRAMMED LEVEL.**

IF S/G levels are going down in an uncontrolled manner, THEN perform the following:

__ a. Trip reactor.

__ b. Continue with this procedure as time allows.

__ c. **GO TO** EP/1/A/5000/E-0 (Reactor Trip or Safety Injection).

STEP 13:

PURPOSE:

Prompt the operators to watch S/G levels because the CF control valves fail closed on a loss of VI. If S/G levels can't be controlled, the Operator is directed to trip the reactor.

DISCUSSION:

The CF control valves use 0 – 60# valve operating air. Depending on the nature of the problem with VI and considering line losses, etc., these valves could start failing at 70# or more VI pressure as indicated in the control room. The operating philosophy regarding loss of Main Feedwater at power is to trip the reactor. This will prevent challenging the Lo-Lo S/G automatic reactor trip and will result in better initial conditions at the time of the manual trip. Refer to PIP 2-M-87-0208 where a automatic reactor trip occurred 5 min after loss of offsite power due to loss of VI to the CF valves. If the CF valves were to get to less than 25% open (for 30 sec or more) on 3 out of 4 S/Gs, an AMSAC could also be generated. For most scenarios, it's likely the operator will have manually tripped the reactor prior to this occurring.

REFERENCES:

PIP 2-M-87-0208

Parent Question AP22N01:

Question 6 AP22N01
1 Pt

Unit 1 is operating at 100 % power when a loss of VI event occurs.
AP/1/A/5500/22 (*Loss of VI*) has been implemented.
VI header pressure is 55 psig and going down.

Which of the following conditions would initially jeopardize the plant and require the SRO to direct tripping the Unit 1 Reactor per AP/1/A/5500/22 (*Loss of VI*)?

A. 1NV-238 (Charging Line Flow Control) fails closed.

B. 1CF-23AB (B S/G CF Control Vlv) fails closed.

C. 1RN-252B (RB Non Ess Sup Cont Outside Isol) fails closed.

D. 1NV-34A ("A" NC Pump Return Isolation) fails closed.

Answer 6 B

SYS103 A4.04 - Containment System
Ability to manually operate and/or monitor in the control room: (CFR: 41.7 / 45.5 to 45.8)
Phase A and phase B resets .....

Given the following conditions on Unit 1:

- A LOCA has occurred inside Containment
- Containment pressure is currently 3.5 PSIG

Which ONE (1) of the following describes the MINIMUM steps required before KC can be restored to Containment?

A. Reset Phase A

B. Reset Phase B

C. Reduce Containment pressure below 1.0 PSIG, reset Phase A

D. Reduce Containment pressure below 3.0 PSIG, reset Phase B

General Discussion

Phase B actuation secures Component Cooling Water (KC) to the Reactor Coolant pumps, Nuclear Service Water (RN) to the Reactor Coolant Pump Motor Coolers, Containment Ventilation Cooling Water (RV) and Instrument Air (VI) to the containment.

Phase "B" can be reset with signal still present, once resets are pushed, we regain control of valves that close on the Phase "B" signal.

Answer A Discussion

INCORRECT: See explanation above.

PLAUSIBLE: This answer is plausible if the applicant does not recall which signal (Phase A or Phase B) closes the Containment KC valves.

Answer B Discussion

CORRECT: See explanation above.

Answer C Discussion

INCORRECT: See explanation above.

PLAUSIBLE: The answer if the applicant does not recall whether the KC valves are closed by a Phase A or Phase B signal. If the applicant concludes that the valves are closed by a Phase A signal it is reasonable to also conclude that Containment pressure must be reduced to less than 1.0 PSIG (where a Phase A signal would be initiated by the Hi Containment pressure SI) in order to reset the the Phase A signal.

Answer D Discussion

INCORRECT: See explanation above.

PLAUSIBLE: This answer is plausible since the KC valves are closed by a Phase B signal and the signal must be reset to open the valves. It is reasonable for the applicant to conclude that the Hi-Hi Containment pressure signal "seals in" which would prevent resetting the Phase B signal unless Containment pressure is reduced to less than 3.0 PSIG.

Basis for meeting the KA

By demonstrating a knowledge of when the Phase B reset must be operated to regain control of equipment operated by the Phase B signal, the applicant demonstrates the ability to operate Phase B resets from the Control Room. Therefore the KA is matched.

Basis for Hi Cog

Basis for SRO only

Job Level	Cognitive Level	QuestionType	Question Source
RO	Memory	BANK	MNS Exam Bank ECCISEN04

Development References

Learning Objective:
1) ECC-ISE #13

References:
1) Lesson Plan OP-MC-ECC-ISE Section 3.1

Student References Provided

SYS103 A4.04 - Containment System
Ability to manually operate and/or monitor in the control room: (CFR: 41.7 / 45.5 to 45.8)
Phase A and phase B resets .....

401-9 Comments:

Remarks/Status

401-9 Comments:

Since Phase B is actuated (3.5 psig), it would appear that the KC valves are closed as stated. The distractor analysis for D appears to indicate that Cntmt pressure must be reduced to < 3 psig before phase B can be reset (because phase A is still in). In other words can one reset phase B without phase A being reset? Please re-verify this because the reference was not clear on this issue.

QUESTION 28 2528 B

This Q is E until re-verified.

Resolution / Comments:

Phase A does not have to be reset in order to reset Phase B. And, Phase B can be reset with containment pressure greater than 3.0 psig. The wording in distracter D analysis is incorrect. Instead of "prevent resetting the Phase A signal unless Containment pressure is reduced" is should have said "prevent resetting the Phase B signal unless Containment pressure is reduced". Changed analysis for distracter D accordingly.

Question 28 References:

From Lesson Plan OP-MC-ECC-ISE Section 3.1:

Objective # 13

Phase "B" Containment Isolation **is actuated by:**

Hi Hi Containment Pressure	> 3.0 psig on $^{2}/_{4}$ channels
Manually	$^{1}/_{2}$ pushbuttons

Phase B actuation secures Component Cooling Water (KC) to the Reactor Coolant pumps, Nuclear Service Water (RN) to the Reactor Coolant Pump Motor Coolers, Containment Ventilation Cooling Water (RV) and Instrument Air (VI) to the containment.

Phase "B" can be reset with signal still present, once resets are pushed, we regain control of valves that close on the Phase "B" signal.

Containment Ventilation Isolation (S_H) **is initiated by any of the following:**

- **Safety Injection (S_S)**
- **Manual Phase "A" (S_t)**
- **Manual NS/Phase "B"**
- **Trip 2 alarm on EMF-38, 39, or 40**

Containment Ventilation Isolation (S_H) signal secures VQ and VP.

To "Reset" Containment Ventilation Isolation following a Safety Injection, Manual Phase "A", or Manual Phase "B", the Containment Ventilation (S_H) "Reset" Pushbuttons must be depressed (can reset without resetting the initiating signal).

To "Reset" Containment Ventilation following an EMF 38, 39, 40 Trip II, the EMF must be reset, then the Containment Ventilation "Reset Pushbuttons must be depressed.

NOTE: Resetting the S_H signal will allow manual control of VQ valves. VQ valves do not have an auto function.

Annulus Ventilation System (VE) start maintains negative pressure in annulus. It is actuated automatically by a Hi Hi Containment pressure signal or manually by either depressing Manual "NS/Phase B" Pushbutton or placing VE (Annulus Ventilation) to "ON".

To reset the start signal we must reset the Phase "B" isolation, then, place VE (Annulus Ventilation) fan switch to "Reset" and place back in "auto".

H_2 Skimmer and Air Return Fan (VX) starts on a Hi Hi Containment Pressure (S_p) with CPCS or Manually by NS/Phase B pushbutton and CPCS after a 10 minute time delay.

Question 28 Parent Question:
ECCISEN04
1 Pt Given the following conditions:

1) Containment pressure is 3.8 psig
2) Phase B containment isolation has occurred

What are the minimum steps required to restore Component Cooling water to containment?

A. Restore KC to operation immediately

B. Reset Phase B, restore KC to operation

C. Reset SI, reset Phase B, restore KC to operation

D. Reduce containment pressure below 3.5 psig, reset Phase B, restore KC to operation

Answer 599
Answer *B*

MISCINFO: RO&SRO

SOURCE: BCH

REFERENCES: OP-MC-ECC-ISE page 29

LESSON: OP-MC-ECC-ISE TASK:

OBJECTIVE: 1.N.2 TIME:

K/A: 022000K403 (3.6*/4.0*) DATE: 11/29/95

C

2010 MNS SRO NRC Examination QUESTION 29

2529

SYS001 K6.13 - Control Rod Drive System
nowledge of the effect of a loss or malfunction on the following CRDS components: (CFR: 41.7/45.7)
Location and operation of RPIS .....

Give the following conditions on Unit 1:

- The unit is in MODE 3 withdrawing S/D banks in preparation for startup
- 1AD-2 / D10 (RPI Urgent Alarm) Annunciator has just alarmed
- DRPI and OAC RODS position indication for rod D-8 has been lost

What is the FIRST action required by SLC 16.7.9 (Rod Position Indication System - Shutdown)?

A. Place rods in manual ONLY.

B. Place rods in manual AND drive all rods in.

C. Immediately open the reactor trip breakers.

D. Restore rod position indication within 1 hour.

General Discussion

SLC 16.9.7 (Rod Position Indication System - Shutdown) requires that at least one rod position indicator be operable and capable of determining the control rod position within + 12 steps for each rod not fully inserted. This SLC is applicable to Modes 3,4,5. In the situation given in this question, the unit is in Mode 3 in the process of withdrawing S/D Banks. If rod position is lost for any rod, Condition A requires that the Reactor Trip breakers be opened immediately.

Answer A Discussion

INCORRECT: See explanation above.

PLAUSIBLE: With any malfunction involving the control rods this would be the required action in AP-14. It In this case given this is not the correct action because it is not required by SLC 16.9.7.

Answer B Discussion

INCORRECT: See explanation above.

PLAUSIBLE: If the applicant correctly remembers that a shutdown is required but confuses the required action with a one hour requirement. The verification of shutdown margin is consistent with almost every 1 hour action statement concerning rod alignment and position indication with the unit in Mode 1 or 2 therefore it would be plausible for the applicant to apply that requirement to this situation.

Answer C Discussion

CORRECT: See explanation above.

Answer D Discussion

INCORRECT: See explanation above.

PLAUSIBLE: This would satisfy the requirements of TS 3.1.4 (Rod Group alignment limit Action B. With One rod not within alignment limits, Action B.1 requires the rod to be restored within alignment limits within 1 hour. The applicant may incorrectly apply the actions of this spec because with the rod position indication unavailable it would be impossible to prove that it was within alignment limits.

Basis for meeting the KA

Although there is no physical cause/effect relationship between the RPIS and CRDS, for this particular instance, a malfunction has occurred in e RPIS and the effect on the CRDS is that operator action is required by SLC 16.7.9 to immediately de-energize the CRDS. Therefore, the KA s matched.

Basis for Hi Cog

Basis for SRO only

Job Level	Cognitive Level	QuestionType	Question Source
RO	Memory	BANK	Bank MNS ICEDAR01

Development References

SLC 16.9.7

Student References Provided

SYS001 K6.13 - Control Rod Drive System

Knowledge of the effect of a loss or malfunction on the following CRDS components: (CFR: 41.7/45.7)

Location and operation of RPIS .....

401-9 Comments:

Remarks/Status

401-9 Comments:

B is NP as written. Place in the stem "what is the FIRST action" and remove "and do not move them" from distractor B.
E because distractor B is NP as written.

Resolution / Comments:

Revised question per Lead Examiner's recommendation. Then

QUESTION 29 2529 C

rearranged distracters "A" and "B" for psychometrics mading "B" the new correct answer. If this is acceptable the distracter analysis will need to be reworked. See attached file for proped revision.

Question 29 References:

OP-MC-IC-EDA Obj. 10

10.	Concerning the Technical Specifications related to the DRPI System:					
	• Given the LCO title, state the LCO (including any COLR values) and applicability.					
	• For any LCO's that have action required within one hour, state the action.			X	X	X
	• Given a set of parameter values or system conditions, determine if any Tech. Spec. LCO's is (are) not met and any action(s) required within one hour.			X	X	X
	• Discus the bases for a given Tech. Spec. LCO or Safety Limit					
	*** SRO ONLY**			X	X	X
					X	*

From Selected Licensee Commitment 16.9.7

16.7 INSTRUMENTATION

16.7.9 Rod Position Indication System - Shutdown

COMMITMENT

One rod position indicator (excluding demand position indication) shall be OPERABLE and capable of determining the control rod position within ± 12 steps for each shutdown or control rod not fully inserted.

APPLICABILITY

MODES 3, 4 and 5 with the reactor trip breakers in the closed position with rods not fully inserted and capable of withdrawal.

----------NOTE----------

For testing or trouble shooting, alternate methods may be used to ensure there is no possibility of rod motion. These methods are pulling fuses, sliding links in the rod control cabinets or removal of CRDM head cables. After one of these alternate methods is used, the reactor trip breakers may remain in the closed position.

REMEDIAL ACTIONS

CONDITION	REQUIRED ACTION	COMPLETION TIME
A. One or more required rod position indicators inoperable.	Open the reactor trip breakers.	Immediately

Parent Question ICEDAR01

Question 29 ICEDAR01
1 Pt(s) Unit #1 is in Mode 3. While withdrawing Shutdown Bank "E", the DRPI rod position indication for Rod D-8 was lost at 96 steps. The Rod Position Indication (RPI) urgent failure annunciator, General Warning for D-8, and Rod Bottom Light for D-8 were received. OAC Program General 76 does not update for Rod D-8 when Bank "E" is moved. Select the action which must be taken by the operator:

A. Immediately trip the reactor

B. Place rods in manual and do not move them

C. Continue the startup but do not enter Mode 1

D. Drive all rods in and verify shutdown margin within 1 hour

Answer 29 A

SYS011 K3.02 - Pressurizer Level Control System (PZR LCS)
nowledge of the effect that a loss or malfunction of the PZR LCS will have on the following: (CFR: 41.7 / 45.6)
RCS .....

Given the following conditions on Unit 1:

- The unit is at 100% RTP
- All Pressurizer heaters are energized in MANUAL
- The SLIM for 1NV-238 (Charging Flow Control) has been placed in MANUAL due to a malfunction of the Pressurizer Level Master Controller
- The OATC reduces the 1NV-238 SLIM output to reduce Pressurizer level
- Charging Line Flow is inadvertently reduced to 18 GPM

If the 1NV-238 controller output remains constant, after 5 minutes Pressurizer level will be __(1)__ AND the Pressurizer heaters will be __(2)__.

Which ONE (1) of the following completes the statement above?

A. 1. DECREASING
   2. OFF

B. 1. DECREASING
   2. ON

C. 1. INCREASING
   2. OFF

D. 1. INCREASING
   2. ON

General Discussion

On the Pressurizer Level Master Controller, located on the NV - CHARGING FLOW CONTROL Graphic in DCS, the LI (Limit Increase) and LD (Limit Decrease) buttons are used to set a minimum limit "LM" for automatic charging flow to ensure seal injection flow to the NC Pumps is maintained. There is an "LM" setpoint window and also an "LM" bargraph displayed on the Level Master controller. The limit is set in gallons per minute. The normal setting is 35 gpm. This function is bypassed when the Pressurizer Level Master Controller or the SLIMs for NV-238 is placed in "MANUAL". This function is also bypassed when the SLIMs for NV-238 is placed in "L-MANUAL". This limit value is set up per OP/1(2)/A/6200/001A (Chemical and Volume Control System Letdown) Enc. 4.1.

In the event PZR Level decreases to 17%, valves NV1A, NV2A, NV457A, NV458A and NV35A are automatically closed. This isolates letdown to prevent further loss of inventory and minimize the possibility of uncovering the heaters. At the same time all PZR Heater groups are de-energized to protect them from overheating should they become uncovered. An Annunciator Alarm, PZR LO LEVEL HTRS OFF & LETDN SECURED, alerts the operator of the low level condition. Another feature which will isolate letdown and de-energize the pressurizer heaters is charging flow lowering to <20 gpm for > 20 seconds.
With this question, the changing flow is lowered to 18 GPM which would result in a L/D isolation. Approximately 12 GPM will still be leaving the NC system via NCP seal leakoff so with 18 GPM total charging, PZR level will be increasing and PZR heaters will be off.

Answer A Discussion

INCORRECT: See explanation above.

PLAUSIBLE: Part (1) is plausible if the applicant fails to realize that letdown is isolated or concludes that NCP seal leakoff is greater than the current charging flow.

Part (2) is correct and therefore plausible.

Answer B Discussion

INCORRECT: See explanation above.

PLAUSIBLE: Part (1) is plausible if the applicant fails to realize that letdown is isolated or concludes that NCP seal leakoff is greater than the current charging flow.

Part (2) is plausible because the heaters do not de-energize due to PZR low level until level reaches 17%. If the applicant fails to recall that heaters will be off due to the low flow condition associated with charging this answer is plausible.

Answer C Discussion

CORRECT: See explanation above.

Answer D Discussion

INCORRECT: See explanation above.

PLAUSIBLE: Part (1) is correct and therefore plausible.

Part (2) is This answer is plausible if the applicant does not recall that in addition to the letdown isolation when charging flow decreases to less than 20 GPM for 20 seconds the Pressurizer heaters are de-energized as well.

Basis for meeting the KA

The Pressurizer is part of the RCS. Any malfunction that effects Pressuirzer level effects RCS inventory and any malfunction that effects Pressurizer pressure effects RCS pressure. Since these malfunctions/operations affect both Pressurizer pressure and level, RCS pressure and inventory are both effected. Therefore, the KA is matched.

Basis for Hi Cog

This is a higher cognitive level question because it require more than one mental step. First the applicant must analyze the given condition to determine the status of the LCS and the potential consequences of the initial conditions. The applicant must then recall from memory the protective features which can be affected by operating the level control system in the configuration given and determine which protective actions are going to occur and in what order.

Basis for SRO only

Job Level	Cognitive Level	QuestionType	Question Source
RO	Comprehension	NEW	

2010 MNS SRO NRC Examination QUESTION 30

2530

C

Development References

arning Objective:
1) PS-ILE-DCS #17

References:
1) Lesson Plan OP-MC-PS-ILE-DCS Sections 2.4.1 & 2.5.1

Student References Provided

SYS011 K3.02 - Pressurizer Level Control System (PZR LCS)
Knowledge of the effect that a loss or malfunction of the PZR LCS will have on the following: (CFR: 41.7 / 45.6)
RCS .....

401-9 Comments:

Remarks/Status

Proposed revision for 2010 NRC Q-30.

Revision appoved RFA 07/06/10.

Question 30 High Miss Question Proposed Replacement References:

From Lesson Plan OP-MC-PS-ILE-DCS Section 2.4.1:

When the "Soft Control" or the SLIMs for NV-238 is placed in "Manual" or the SLIMs is taken to "L-MANUAL" the Pressurizer Level Master Controller is swapped to "Manual" also by DCS. However, when the "Soft Control" or the SLIMs for NV-238 is returned to "AUTO" the operator must place the Pressurizer Level Master Controller back in "AUTO".

Objective #7

On the Pressurizer Level Master Controller, located on the NV - CHARGING FLOW CONTROL Graphic in DCS, the LI (Limit Increase) and LD (Limit Decrease) buttons are used to set a minimum limit "LM" for automatic charging flow to ensure seal injection flow to the NC Pumps is maintained. There is an "LM" setpoint window and also an "LM" bargraph displayed on the Level Master controller. The limit is set in gallons per minute. **The normal setting is 35 gpm. This function is bypassed when the Pressurizer Level Master Controller or the SLIMs for NV-238 is placed in "MANUAL". This function is also bypassed when the SLIMs for NV-238 is placed in "L-MANUAL".** This limit value is set up per OP/1(2)/A/6200/001A (Chemical and Volume Control System Letdown) Enc. 4.1.

Objective #8

When in "MANUAL", the output of the controller sets a fixed position for NV-238. Increasing the output causes NV-238 to open, while decreasing the output causes NV-238 to close.

Objective #4

2.4.2 NV-238 SLIMs Station

This SLIMs station is used to control the position of NV-238. In AUTO, it compares the output of the Level Master to Selected Charging Flow (which is developed using a Median Select Algorithm with three charging flow inputs) to position the valve for needed charging flow. In "MANUAL or L-MANUAL", UP/DOWN push-button arrowheads are used to position the valve.

When the "Soft Control" or the SLIMs is taken to "MANUAL" or the SLIMs is taken to "L-MANUAL" the Pressurizer Master Level Controller is swapped to "MANUAL" also by DCS. However, when the "Soft Control" or the SLIMs for NV-238 is returned to "AUTO" the operator must place the Pressurizer Level Master Controller back in "AUTO".

Objective #4

2.4.3 PD Pump SLIMs Station

This station is used to control the speed of the PD Pump. **The Controller will be a MANUAL only controller.** The UP/DOWN arrowhead push-buttons are used to adjust speed.

If the AUTO pushbutton is depressed the "LED" on the AUTO pushbutton will illuminate and immediately return to the MANUAL pushbutton "LED" illuminating.

From Lesson Plan OP-MC-PS-ILE-DCS Section 2.5.1:

2.5 Control Functions

2.5.1 PZR Low Level

Objective #9

In the event PZR Level decreases to 17%, valves NV1A, NV2A, NV457A, NV458A and NV35A are automatically closed. This isolates letdown to prevent further loss of inventory and minimize the possibility of uncovering the heaters. At the same time all PZR Heater groups are de-energized to protect them from overheating should they become uncovered. An Annunciator Alarm, PZR LO LEVEL HTRS OFF & LETDN SECURED, alerts the operator of the low level condition. Another feature which will isolate letdown and de-energize the pressurizer heaters is charging flow lowering to <20 gpm for > 20 seconds. The Selected Charging flow signal is developed with a Median Select algorithm with input from three (3) transmitters measuring charging flow. The low charging flow signal is maintained for 15 seconds and then clears, therefore if Pressurizer Level is >17% the Pressurizer Heaters can be placed back into service even though charging flow may not have been restored.

Objective #11

Once level has increased to greater than 17% all heater groups must be manually re-energized and letdown can be re-established. This is accomplished by selecting "MAN" on "A", "B", and "D" Heater MAN/AUTO Selector Switch. This allows closing the 600V supply breaker from their control switches on MC-5. "C" Heater supply breaker is closed via the switch on MC-10. There is no "MAN/AUTO" switch for "C" Heater.

NOTE: If a Safety Injection has occurred, the Safety Injection signal and the sequencers must be reset in order to close the A & B heater breakers.

2.5.2 High Level Deviation

Objective #9

If level should increase to greater than 5% above program level an Annunciator alarm, PZR HI LEVEL DEV CONTROL, is generated and the back-up heaters come on. This is done so that the subcooled water which has just surged into the PZR can be heated to saturation temperature. This will allow the water to flash to steam and avoid a pressure decrease as the level decreases to normal.

2.5.3 Low Level Deviation

If level should decrease to less than 5% below program level an Annunciator alarm, PZR LO LEVEL DEVIATION, alerts the operator of the low level condition.

2.5.4 Hi Level Alarm

If level should increase to 70% an annunciator alarm, PZR HI LEVEL, alerts the operator of the high level condition.

C

2010 MNS SRO NRC Examination QUESTION 31

2531

SYS014 2.4.31 - Rod Position Indication System (RPIS)
SYS014 GENERIC
Knowledge of annunciator alarms, indications, or response procedures. (CFR: 41.10 / 45.3)

Unit 1 is operating at 100% RTP. The following indications are observed on the Digital Rod Position Indication (DRPI) system:

- D-4 rod indication is RED
- Associated rod group background is ORANGE
- 1AD-2 / D10 (RPI URGENT FAILURE) is LIT

Which ONE (1) of the following describes the condition of rod D-4?

A. Rod D-4 is fully inserted.

B. Rod D-4 is at half accuracy.

C. Rod D-4 position cannot be determined.

D. Rod D-4 is greater than 231 steps withdrawn.

General Discussion

The following indications are exhibited with a Data A and Data B failure:
a) Red position for indication for affected rods
b) Red U above affected rods
c) Red zero for affected rods position
d) Red RB light
e) Red Urgent alarm
f) Orange background for affected banks
g) Yellow Data Failure alarm (A and B)
h) Yellow deviation alarm
i) RPI Non-Urgent Annunciator
j) RPI Urgent Annunciator

Answer A Discussion

INCORRECT: See explanation above.

PLAUSIBLE: This answer is plausible since the applicant may conclude from the indications that the rod is fully inserted and the indication is valid based on the given conditions.

Answer B Discussion

INCORRECT: See explanation above.

PLAUSIBLE: It is plausible for the applicant to conclude that the rod is at half accuracy due to a Data A OR Data B failure

Answer C Discussion

CORRECT: See explanation above.

Answer D Discussion

INCORRECT: See explanation above.

PLAUSIBLE: This answer is plausible if the applicant concludes that a rod which is >231 steps withdrawn gives an RPI urgent failure. DRPI is not capable of monitoring a rod greater than 231 step withdrawn and it would be reasonable for the applicant to conclude that this condition would result in an urgent failure which would be consistent with any other condition where DRPI could not determine actual rod position.

Basis for meeting the KA

The KA is matched because the applicant must understand the meaning of numerous DRPI system alarms and their impact on the operation of the DRPI system.

Basis for Hi Cog

This is a higher cognitive level question. The applicant must recall what each DRPI alarm means with regards to the operation of the system. The applicant must then analyze from the multiple alarms given in the initial conditions the overall impact on the DRPI system. Since the question requires multiple mental steps to arrive at the correct answer, this is a higher cognitive level question.

Basis for SRO only

Job Level	Cognitive Level	QuestionType	Question Source
RO	Comprehension	BANK	CNS 2008 RO Audit Retake Exam (Q1857)

Development References

Learning Objectives:
1) IC-EDA #7 & 8

References:
1) Lesson Plan OP-MC-IC-EDA Section 3.2.1

Student References Provided

SYS014 2.4.31 - Rod Position Indication System (RPIS)
SYS014 GENERIC
Knowledge of annunciator alarms, indications, or response procedures. (CFR: 41.10 / 45.3)

2010 MNS SRO NRC Examination

QUESTION 31

2531

C

401-9 Comments:

Remarks/Status

401-9 Comments:

I think the answer is obvious as written. Can you reduce the stem indications to make it less obvious?
"D" is NP because of the 3rd bullet (Red "RB" is indicated for rod D-4)
Replace D

Resolution / Comments:

Revised question and removed third bullet. Didn't really see how we could replace "D" with anything that was more plausible. Removing third bullet gives "D" plausibility. See attached file for revised copy of question.

Question 31 References:

From Lesson Plan OP-MC-IC-EDA Section 3.2.1:

DRPI Urgent Alarm

Objective #7,8

Refer to Drawing 7.10, D.R.P.I Display Data A + B Failure (Urgent).

DRPI Urgent Alarm caused by Data A Failure and Data B Failure on a rod P-8:

- The best calculated position indicated immediately below rod P-8 alpha-numaric designator would indicate a red "0".
- The failure status line would indicate a red "U" above rod P-8 bar graph.
- The rods' bar graph would turn red and indicate rod height of "0".
- The background color for Control Bank "C" would turn orange.
- A red "RB" would be indicated on the rod bottom status line.
- The system status line would indicate a yellow DATA A FAILURE, yellow DATA B FAILURE, red URGENT ALARM, and since the other rods in this bank are > 12 steps withdrawn a yellow DEVIATION > 12 STEPS.

Refer to Drawing 7.11, D.R.P.I Display Rod Deviation (Urgent)

DRPI Urgent Alarm caused by an actual deviation of 12 steps on a rod P-8:

- The background color for Control Bank "C" would turn orange.
- The system status line would indicate a red URGENT ALARM and a yellow DEVIATION > 12 STEPS condition.

Refer to Drawing 7.12, D.R.P.I Display Gray Codes Disagree (Urgent)

DRPI Urgent Alarm caused by gray codes not in agreement on rod P-8 with the result the best calculated position is 12 steps or more from other rods in the bank.

- The best calculated position indicated immediately below rod P-8 alpha-numaric designator would indicate a average of Data "A" and Data "B".
- The rods' bar graph would turn yellow.
- The background color for Control Bank "C" would turn orange
- The system status line would indicate a red URGENT ALARM and a yellow DEVIATION > 12 STEPS condition.

Note that if the gray codes not in agreement resulted in an averaged position within 12 steps of the other rods, there would be no deviation or urgent indications. The only indication would be the rod would turn yellow with a "RPI Non-Urgent" Annunciator. An example of this scenario is when leads for Data A and Data B are rolled, and rods are withdrawn. DRPI sees the B coil made first, knows this is a "disagreement" and intermittently turns the rod yellow (until the A coil is made), but the indicated position never gets 12 steps from the other rods, so no deviation and no urgent alarm.

KA	KA_desc
SYS014	Knowledge of RPIS design feature(s) and/or interlock(s) which provide for the following : (CFR: 41.5 / 45.7)□Rod bottom lights .....
K4.03	

Unit 1 is operating at 100% power. Given the following indications on the Digital Rod Position Indication (DRPI) system:

- Associated bank background is orange
- D-4 rod indication is red
- Red "RB" is indicated for rod D-4
- 1AD-2, D/10 "RPI URGENT FAILURE" is alarming

Which one of the following describes the condition of rod D-4?

A. Rod D-4 is at half accuracy

B. Rod D-4 at greater than 231 steps withdrawn

C. Rod D-4 is fully inserted

D. Rod D-4 position cannot be determined

General Discussion

The following indications are exhibited with a Data A and Data B failure:
a) Red position for indication for affected rods
b) Red U above affected rods
c) Red zero for affected rods position
d) Red RB light
e) Red Urgent alarm
f) Orange background for affected banks
g) Yellow Data Failure alarm (A and B)
h) Yellow deviation alarm
i) RPI Non-Urgent Annunciator
j) RPI Urgent Annunciator

Answer A Discussion

Plausible: The student may believe the rod is at half accuracy due to a Data A OR Data B failure

Answer B Discussion

Plausible: The student may believe that rod is >231 steps withdrawn gives an RPI urgent failure.

Answer C Discussion

Plausible: The student may believe the rod is fully inserted and the indication is valid based on the given conditions

Answer D Discussion

Correct: The indications given are for a Data A and Data B failure for rod D-4

Basis for meeting the KA

Basis for Hi Cog

Basis for SRO only

Job Level	Cognitive Level	QuestionType	Question Source
RO	Comprehension	BANK	2007 Audit Examination#2 Q53 (Bank 53)

Development References	Student References Provided
EDA	

KA	KA_desc
SYS014	Knowledge of RPIS design feature(s) and/or interlock(s) which provide for the following : (CFR: 41.5 / 45.7)□Rod bottom lights .....
K4.03	

401-9 Comments:	Remarks/Status

C

SYS015 K2.01 - Nuclear Instrumentation System (NIS)
nowledge of bus power supplies to the following : (CFR: 41.7)
IS channels, components, and interconnections .....

Given the following conditions on Unit 1:

- Unit is shutdown in MODE 6 for Refueling
- While responding to a series of alarms associated with the NI's the operator notices that the Instrument Power and Control Power lights on the PR N43 drawers are DARK

Which ONE (1) of the following is the cause of these indications?

A. Inverter 1EVIA has tripped.

B. The feeder breaker for panelboard 1EKVB has tripped.

C. Inverter 1EVIC has tripped.

D. The feeder breaker for panelboard 1EKVD has tripped.

General Discussion

NIS Channel 3 (PR N43) is powered from 1EKVC which is fed from Static Inverter 1EVIC.

Answer A Discussion

INCORRECT: See explanation above.

PLAUSIBLE: This answer is plausible because Static Inverter 1EVIA supplies panelboard 1EVCA which powers NIS Channel 1 (N31, N35, and N41).

Answer B Discussion

INCORRECT: See explanation above.

PLAUSIBLE: This answer is plausible because panelboard 1EKVB provides power to NIS Channel 2 (N32, N36, and N42).

Answer C Discussion

CORRECT: See explanation above.

Answer D Discussion

INCORRECT: See explanation above.

PLAUSIBLE: This answer is plausible because panelboard 1EKVD provides power to NIS Channel IV (N44).

Basis for meeting the KA

The KA is matched because the applicant must know the power supplies for all NIS channels to determine the correct answer.

Basis for Hi Cog

Basis for SRO only

Job Level	Cognitive Level	QuestionType	Question Source
RO	Memory	NEW	

Development References

Learning Objectives: EL-EPL #5 & 6

References:
1. Lesson Plan OP-MC-EL-EPL Section 1.2
2. Lesson Plan OP-MC-IC-ENB Section 2.7

Student References Provided

SYS015 K2.01 - Nuclear Instrumentation System (NIS)
Knowledge of bus power supplies to the following : (CFR: 41.7)
NIS channels, components, and interconnections .....

401-9 Comments:

Remarks/Status

401-9 Comments:

No comment.

Resolution / Comments:

N/A

Question 32 References:

From Lesson Plan OP-MC-EL-EPL Section 1.2:

120 VAC Vital Instrumentation and Control Power System

Objective # 5

The 120 VAC Vital Instrumentation and Control Power System consist of four vital panelboards and four inverters to each unit. The four vital panelboards will normally receive power through static inverters 1(2) EVIA, 1(2) EVIB, 1(2) EVIC and 1(2) EVID. A regulated power supply (1KRP for Unit 1 and 2 KRP for Unit 2) is also provided, as an alternate power source, to allow uninterruptible manual power transfer to panelboards 1(2) EKVA, 1(2) EKVB, 1(2) EKVC, and 1(2) EKVD when an inverter is intentionally taken out-of-service.

This system provides four independent channels for instrumentation and control power to both units (Unit 1 and 2). "A" Train loads are fed from channels "A" and "C" while the "B" Train loads are fed from channels "B" and "D". Three of the four channels will ensure that the overall system functional capability is maintained, comparable to the original design standards for safe operation. However, a loss of any two of these channel sources will result in a shutdown of the respective unit.

Objective # 6

The following is a listing of typical loads that are powered from the 120 VAC Distribution Centers:

- NIS Channels 1 thru 4 Instrument Power
- NIS Channels 1 thru 4 Control Power
- SSPS Instrument Power
- SSPS Control Power
- FWST Channels 1 thru 4 Instrument Power
- Containment Radiation Monitors Isolation Valves
- Auxiliary Safeguard Cabinets Instrument Power
- Post Accident Recorders
- Post Accident Annunciators

1.0 COMPONENT DESCRIPTION

1.1. 125 VDC Vital Instrumentation and Control Power System Battery Chargers

The two-unit station is provided with five battery chargers, designated EVCA, EVCB, EVCC, EVCD; and a spare battery charger, designated EVCS, which can be used to replace a charger if required. These chargers, supplied by SCI (Solid state Controls Incorporated), are 500 ampere chargers with a charging capability of 500-625 amps, however, we have them current limited at 525 amperes.

From Lesson Plan OP-MC-IC-ENB Section 2.7:

2.7 Power Supplies

NIS Channel I	EKVA
NIS Channel II	EKVB
NIS Channel III	EKVC
NIS Channel IV	EKVD
Wide Range Train A	EKVA
Wide Range Train B	EKVD

3.0 SYSTEM OPERATION

3.1 Normal Operation

3.1.1 Operating Procedures

The Excore Nuclear Instrumentation System provides the operator with neutron flux indication for all modes of operations. During each reactor startup, a healthy skepticism concerning the validity of power indications is warranted, particularly following a refueling outage. Changes in plant equipment or conditions, along with a strong desire to return the plant to full operation, may influence personnel to accept less than complete explanations for discrepant indications. For example, excessive electrical generation for the nuclear power indicated (a symptom of miscalibrated nuclear instruments) has been attributed to factors such as: cold circulating water temperature, expected efficiency improvements, and changes in core design or instrumentation.

B

2010 MNS SRO NRC Examination QUESTION 33

2533

SYS016 K4.01 - Non-Nuclear Instrumentation System (NNIS)
Knowledge of NNIS design feature(s) and/or interlock(s) which provide for the following: (CFR: 41.7)
Reading of NNIS channel values outside control room .....

Which ONE (1) of the following sets of indications can be read outside the Main Control Room on BOTH the Auxiliary Shutdown Panel (ASP) AND the Safe Shutdown Facility (SSF) Control Panel?

A. SR Neutron Flux AND S/G WR Levels

B. SR Neutron Flux AND Pressurizer Level

C. Incore Thermocouples AND S/G WR Levels

D. Incore Thermocouples AND Pressurizer Level

General Discussion

Pressurizer level and SR Neutron Flux can be read outside the Main Control Room on both the ASP and SSF Control Panels.

Answer A Discussion

INCORRECT: See explanation above.

PLAUSIBLE: This answer is plausible because SR Neutron Flux can be read on the both the ASP and the SSF. SG Wide Range level can be read on the SSF but not on the ASP.

Answer B Discussion

CORRECT: See explanation above.

Answer C Discussion

INCORRECT: See explanation above.

PLAUSIBLE: This answer is plausible because S/G WR Levels and Incore Thermocouples can both be read on the SSF Control Panel .

Answer D Discussion

INCORRECT: See explanation above.

PLAUSIBLE: This answer is plausible because Incore Thermocouples can be read on the SSF Control Panel and Pressurizer level can be read on both the ASP and SSF.

Basis for meeting the KA

The KA is matched because the applicant must recall all indications (both Nuclear and Non-Nuclear indications) available at the SSF and ASP.

Basis for Hi Cog

Basis for SRO only

Job Level	Cognitive Level	QuestionType	Question Source
RO	Memory	NEW	

Development References

Learning Objectives:
1. CP-ASP #2
2. CP-AD #8

References:
1. Lesson Plan OP-MC-CP-AD Section 2.1
2. Lesson Plan OP-MC-CP-ASP Section 2.1

Student References Provided

SYS016 K4.01 - Non-Nuclear Instrumentation System (NNIS)
Knowledge of NNIS design feature(s) and/or interlock(s) which provide for the following: (CFR: 41.7)
Reading of NNIS channel values outside control room .....

401-9 Comments:

Remarks/Status

401-9 Comments:

Consider adding an additional indication to increase LOD.
A,A (none good)
A,B (B good only)
B,B (All good)
B,A (B good only

Resolution / Comments:

Developed a revised question with two answers per distracter. If

QUESTION 33 2533 B

revised question is used the distracter analysis will need to be revised. See attached file for revised copy of question.

Question 33 References:

From Lesson Plan OP-MC-CP-ASP Section 2.1:

1.0 COMPONENT DESCRIPTION

1.1. Panel Indications (Refer to Drawings 7.1, 7.2, 7.3, & 7.4)

1.1.1. Temperature indications (all temperature indication is continuous)

- Reactor Coolant System Wide Range Hot Leg Temperature (0-700°F) Loop D Hot Leg
- Reactor Coolant System Wide Range Cold Leg Temperature (0-700) Loop D Cold Leg
- Regenerative Heat Exchanger Letdown Temperature (100-600)
- A & B ND Pump Discharge Temperature (50-400°F)
- A, B, C, & D ND to Cold Leg Temperatures (50-400°F)

1.1.2. Pressure Indications (all pressure indication is continuous)

- Wide Range Reactor Coolant System Pressure (0-3000 psig)
- Narrow Range Reactor Coolant System Pressure (PZR Press) (1700-2500 psig)
- Letdown Pressure (0-600 psig)

1.1.3. Level Indications (continuous)

- Channel 1 Pressurizer Level (0-100%)

1.1.4. Flow Indications (continuous)

- Letdown Flow (0-200 gpm)

1.1.5. Power Indication (continuous)

- SR Nuclear Flux (10^{-1} - 10^{5} cps, separately detected, not part of the NIS)

1.2. Manual Loaders on the Panel

1.2.1. NV-459 (Variable L/D Orifice Outlet Flow Control)

It is used to throttle letdown flow rate when initiating letdown. Throttling prevents thermal shock of the letdown piping by allowing the operator to slowly initiate letdown. Per procedures, excess letdown is established if normal letdown is not in service.

1.2.2. NV-21A (NV Spray to PZR Isol)

It is used to control NC System pressure if the normal spray valves are unavailable or not functioning properly (**Note:** the normal spray valves should be operating in Auto, and no control of them on the ASP). It's used on the ASP for NC System pressure control during cooldown. Letdown **must** be in service before this valve can be used. This is to ensure the ΔT between the Pressurizer Temperature and Spray Water is less than 320°F, which aids in preventing thermally shocking the spray nozzle. When NV-21 is being used, valves NV-13B and 16A must be closed (Normal and Alternate Charging) which allows the operator to maintain a more constant letdown and charging flow balance.

From Lesson Plan OP-MC-CP-AD Section 2.1:

The pump is driven by an induction motor powered from the standby shutdown power supply. Control switches for the pumps and various isolation valves are located on the SSF Control Panel.

A filter is provided downstream of the pump to collect any particulate matter larger than 5 microns that could cause damage to the reactor coolant pump seals. Filter differential pressure is indicated locally.

Since the makeup pumps deliver a constant flowrate to the Reactor Coolant System, it may become necessary to remove excess water to maintain Pressurizer level 60 - 80%. Solenoid operated, reactor vessel head vent valves (NC272 & 273) are powered by the Standby Shutdown system to allow discharge of water to the Pressurizer Relief Tank (PRT). Controls for these valves are located on the SSF Control Panel.

A flowpath for the Standby M/U Pump is provided by opening NV842AC and NV849AC. These valves will close on a Phase A (S_t) signal if they are being powered from their normal power supply (EMXA-4). Once control is swapped to the SSF and EMXA-4 is swapped to its alternate power supply (MCC SMXG) the valves will no longer close on a Phase A (S_t) signal.

Pressurizer level is indicated on the SSF Control Panel.

1.2.3. Temperature Indication

Five Core Exit Thermocouples can be monitored from the SSF Control Panel to monitor core conditions. A multi-conductor cable that is connected on the side of the control panel must be relocated in order to view the thermocouple readings.

The highest reading Core Exit Thermocouple is used to determine subcooling. Indication is also provided for the Incore reference junction temperature deviation. This temperature deviation indication is used to obtain a corrected Core Exit Thermocouple value to be used in determining subcooling.

Indication is also provided for Loop "A" and "D" WR Cold Leg temperatures.

1.2.4. Pressure Control

In order to prevent steam bubble formation in the reactor vessel, primary pressure must be maintained above saturation pressure at the core exit temperature. A sub-group of Back-Up Heater Group "D" (≈70 kW) is powered from the SSF electrical distribution system and can be controlled from the SSF Control Panel. The heaters are energized as necessary to maintain subcooling if pressure decreases. This ensures the steam bubble stays in the Pressurizer. The heaters have a LOCAL/REMOTE switch and a control switch. The LOCAL position bypasses all AUTO and Control Room functions.

The Pressurizer Spray valves can also be controlled from the SSF Control Panel. The spray valves have open/close switches which are used to ensure that the spray valves remain closed (gives a "hard" closed signal). The normal position for this switch is the closed position. This switch is only functional when controlling (via EMXA-4 swap) from SSF.

Reactor Coolant System wide range pressure indication is provided on the SSF Control Panel.

1.2.5. Flux Indication

WR Neutron Flux Indication is provided on the SSF Control Panel. Indication is provided from 10^{-1} CPS up to 10^{5} CPS.

1.3. Secondary System Control

Steam Generator Wide Range level indication is provided on the SSF Control panel. These level indicators are calibrated for hot conditions since the design of the SSF is to maintain Hot Standby.

The TD CA Pump will auto start if 1/1 WR level transmitter indicates 72% on 2/4 S/G's. A step in the body of AP-24 "Loss of Plant Control due to Fire or Sabotage" will have the operator manually start the TD CA pump prior to leaving the control room and a step in AP-24 Enc. 1 will place SA-48ABC in the open position at the SSF. Procedurally the TDCA flow will be controlled based on the availability of the controls in this order: control room, the CA pump room or locally in the doghouses. A steam supply is assured to the TD CA Pump on swap over to the SSF due to the MSIV and S/G PORV on "C" S/G failing closed. Feedwater is also assured to provide a heat sink due to the CA supply valves (CA 54AC and CA 66AC) from the TD CA Pump to "B" and "A" S/G's failing as is (with a normal position of open) on swap over to the SSF. Feedwater is provided to "C" S/G from the TD CA Pump by verifying CA50B (TD CA to S/G C Isol) open and securing the hand wheel clutch in the engaged position as directed by procedure.

NOTE: The word disengaged in the next paragraph refers to the motor not the handwheel.

Permanently installed step ladders were added in the basement of the doghouse near CA54AC and CA66AC. The motor operator clutch levers for CA38B, CA50B, CA54AC,

and CA66AC have eyelets such that an eyebolt can be screwed into them to secure the lever in the disengaged position. The eyebolts are stored on the clutch lever plates using a short piece of small wire. Labels are attached with this wire which indicates that eyebolts are dedicated for use during certain SSF Events.

A two position switch for SA-48ABC (A FWDT Steam Supply) is located on the SSF Control Panel to prevent continual cycling of the TD CA Pump. The two positions are:

AUTO: SA-48ABC will open in response to an auto start signal.

OPEN: Seals in SA-48ABC in the open position and bypasses the auto start signal. This switch will normally be maintained in the "Auto" position. It will be selected to open by Enclosure 1 of AP-24 to seal in the auto start signal to the TDCA pump.

NOTE: This switch will only affect the SSF related solenoids.

SYS028 A2.01 - Hydrogen Recombiner and Purge Control System (HRPS)

Malfunctions or operations on the HRPS; and (b) based on those predictions, use procedures to correct, control or mitigate the consequences of those malfunctions or operations: (CFR: 41.5 / 43.5 / 45.3 / 45.13)

Hydrogen recombiner power setting, determined by using plant data book .....

Given the following on Unit 1:

- A LOCA occurred 24 hours ago
- The 1A H2 Recombiner was placed in service per EP/1/A/5000/G-1 Enclosure 4 (Placing H2 Recombiners In Service)
- Containment pressure was 5 PSIG when the Recombiner was placed in service

Current Conditions are as follows:

- Containment pressure is 1.5 PSIG

Based on the conditions above the recombiner Power Setting was __(1)__ when the recombiner was placed in service and should now be set to __(2)__.

Which ONE (1) of the following completes the statement above?

REFERENCE PROVIDED

A. 1. 49.8 KW
   2. 45.3 KW

B. 1. 49.8 KW
   2. 45.8 KW

C. 1. 50.3 KW
   2. 45.3 KW

D. 1. 50.3 KW
   2. 45.8 KW

General Discussion

In the scenario given with this question the power setting for the H2 recombiner should initially be 49.8 KW based on the initial containment pressure. Based on the current containment pressure of 1.5 PSIG the power setting should be 45.8 KW.

Initial Power setting -

Pressure Factor, CP = 1.395 @ 5 PSIG
Reference Power = 35.670 KW

Power Setting = CP x Reference Power

Power Setting = 1.395 x 35.67 = 49.8 KW

Current Power setting -

Pressure Factor, CP = 1.285 @ 5 PSIG
Reference Power = 35.670 KW

Power Setting = CP x Reference Power

Power Setting = 1.285 x 35.67 = 45.8 KW

Answer A Discussion

INCORRECT: See explanation above.

PLAUSIBLE: Part 1 is correct. Part 2 is plausible if the applicant incorrectly reads the wrong pressure line on the graph. Incorrectly reading the graph is plausible since the major divisions are in 2 PSIG increments and the minor divisions are in 1/2 PSIG increments.

Answer B Discussion

CORRECT: See explanation above.

Answer C Discussion

INCORRECT: See explanation above.

PLAUSIBLE: Both parts are plausible if the applicant incorrectly reads the wrong pressure line on the graph. Incorrectly reading the graph is plausible since the major divisions are in 2 PSIG increments and the minor divisions are in 1/2 PSIG increments.

Answer D Discussion

INCORRECT: See explanation above.

PLAUSIBLE: Part 1 is plausible if the applicant incorrectly reads the wrong pressure line on the graph. Incorrectly reading the graph is plausible since the major divisions are in 2 PSIG increments and the minor divisions are in 1/2 PSIG increments. Part 2 is correct.

Basis for meeting the KA

The KA is matched because the applicant is asked to determine the Power Setting for the recombiner under two different conditions. This requires the applicant to determine the Pressure Factor both conditions using the Power Correction Factor curve from the Plant Data Book and then calculate the correct Power Setting for each condition.

Basis for Hi Cog

This is a hi cog question because the applicant must read the Power Correction Factor graph from the Plant Data Book and use the information from the graph to calculate the correct power setting. Since this requires more than one mental step, it is a higher cognitive level question.

Basis for SRO only

Job Level	Cognitive Level	QuestionType	Question Source
RO	Comprehension	NEW	

Development References

Lesson Plan OP-MC-CNT-VX Pg. 27 (Rev 23)

OP-MC-CNT-VX Obj. 7

Student References Provided

U-1 Data Book Curve 1.8
EP Generic Enc G-1 End. 4

SYS028 A2.01 - Hydrogen Recombiner and Purge Control System (HRPS)

alfunctions or operations on the HRPS; and (b) based on those predictions, use procedures to correct, control or mitigate the consequences of those malfunctions or operations: (CFR: 41.5 / 43.5 / 45.3 / 45.13)

Hydrogen recombiner power setting, determined by using plant data book .....

401-9 Comments:

Remarks/Status
401-9 Comments: No comment. ---------- Resolution / Comments: Replaced "should" in stem of question with "will" based on General Comment from Lead Examiner. See attached copy of question for proposed revision.

Question 34 References:

	OBJECTIVE	NLO	NLOR	LPRO	LPSO	LOR
7.	Discuss the instrumentation and controls associated with the Hydrogen Recombiners, to include: • Temperature readout • Power adjust potentiometer • Power out meter • Power out switch • Power available light.	X	X	X	X	X
8.	Discuss the instrumentation associated with the Hydrogen Analyzer Concentration Monitors.	X	X	X	X	X
9.	Evaluate plant parameters to determine any abnormal system conditions that may exist.	X	X	X	X	X
10.	Given a limit and/or precaution associated with an Operating Procedure, discuss it's basis and applicability.	X	X	X	X	X
11	Concerning the Technical Specifications related to the VX System:					
	• Given the LCO title, state the LCO (including any COLR values) and applicability.			X	X	X
	• For any LCO's that have action required within one hour, state the action.			X	X	X
	• Given a set of parameter values or system conditions, determine if any Tech. Spec. LCO's is (are) not met and any action(s) required within one hour.			X	X	X
	• Given a set of parameter values or system conditions and the appropriate Tech Spec, determine required action(s)			X	X	X
	• Discus the bases for a given Tech. Spec. LCO or Safety Limit				X	*
	*** SRO ONLY**					

From OP-MC-CNT-VX Pg. 27 (Rev 23)

3.2 Abnormal and Emergency Operation

The control panels for the electrical Recombiners are located in the MG set rooms. The recombiner units are located in Containment such that they process a flow of Containment air containing hydrogen at a concentration typical of the lower containment compartments. This is because the Hydrogen Skimmer Fans discharge in the vicinity of the Recombiners and the Recombiners process that flow. There is no direct piping or duct connection between the Recombiners and the Hydrogen Skimmer Fans.

The recombiner consists of a thermally insulated vertical metal duct with electric resistance metal-sheathed heaters provided to heat a continuous flow of Containment air (containing a low concentration of hydrogen), up to a temperature which is sufficient to cause a reaction between hydrogen and oxygen (between 1225°F and 1400°F). The recombiner is provided with an outer enclosure to keep out water coming from the Containment Spray System. The recombiner consists of an inlet preheater section, a heater-recombination section, and a mixing chamber.

The warmed air passes through an orifice plate (should protect the recombiner from being overloaded from higher hydrogen concentrations up to 6.0%) and then enters the electric heater section where it is heated to approximately 1225-1400°F causing recombination to occur. Tests have verified that the recombination is not a catalytic surface effect associated with the heaters, but occurs due to the increased temperature of the process gases. Since the phenomenon is not a catalytic effect, poisoning of the unit as by fission products will not occur. The heater section consists of five assemblies of electric heaters stacked vertically. Each assembly contains individual heating elements. Operation of the unit is virtually unaffected in the event of a few individual heating elements failing to function properly.

Objective #7

The recombiners are equipped with chromel-alumel thermocouples with a reference junction monitored with an RTD. Digital temperature meters are provided on the Hydrogen Recombiner Heater Temperature Monitor Panel **(refer to Drawing 7.3)** located in the MG set rooms. The display is normally off but may be operated if desired by:

1) Power on
2) Unit will perform self diagnostics and
   Return: Command?,
3) Press AUTO key.

The unit will display sequentially the three thermocouples points (numbered 1, 2, 3) and the reference junction temperature (number 4). The value for the reference junction is not fixed and is used to perform reference junction compensation for the thermocouples inputs. The three thermocouples provide recombiner temperature indication during testing. Temperature indication is not required during a LOCA, so the thermocouples portion of the recombiners is non-safety related, and both trains are on the same panel.

Question 34 References:

	OBJECTIVE	NLO	NLOR	LPRO	LPSO	LOR
7.	Discuss the instrumentation and controls associated with the Hydrogen Recombiners, to include: • Temperature readout • Power adjust potentiometer • Power out meter • Power out switch • Power available light.	X	X	X	X	X
8.	Discuss the instrumentation associated with the Hydrogen Analyzer Concentration Monitors.	X	X	X	X	X
9.	Evaluate plant parameters to determine any abnormal system conditions that may exist.	X	X	X	X	X
10.	Given a limit and/or precaution associated with an Operating Procedure, discuss it's basis and applicability.	X	X	X	X	X
11	Concerning the Technical Specifications related to the VX System:					
	• Given the LCO title, state the LCO (including any COLR values) and applicability.			X	X	X
	• For any LCO's that have action required within one hour, state the action.			X	X	X
	• Given a set of parameter values or system conditions, determine if any Tech. Spec. LCO's is (are) not met and any action(s) required within one hour.			X	X	X
	• Given a set of parameter values or system conditions and the appropriate Tech Spec, determine required action(s)			X	X	X
	• Discus the bases for a given Tech. Spec. LCO or Safety Limit				X	*
	*** SRO ONLY**					

From OP-MC-CNT-VX Pg. 27 (Rev 23)

3.2 Abnormal and Emergency Operation

The control panels for the electrical Recombiners are located in the MG set rooms. The recombiner units are located in Containment such that they process a flow of Containment air containing hydrogen at a concentration typical of the lower containment compartments. This is because the Hydrogen Skimmer Fans discharge in the vicinity of the Recombiners and the Recombiners process that flow. There is no direct piping or duct connection between the Recombiners and the Hydrogen Skimmer Fans.

The recombiner consists of a thermally insulated vertical metal duct with electric resistance metal-sheathed heaters provided to heat a continuous flow of Containment air (containing a low concentration of hydrogen), up to a temperature which is sufficient to cause a reaction between hydrogen and oxygen (between 1225°F and 1400°F). The recombiner is provided with an outer enclosure to keep out water coming from the Containment Spray System. The recombiner consists of an inlet preheater section, a heater-recombination section, and a mixing chamber.

The warmed air passes through an orifice plate (should protect the recombiner from being overloaded from higher hydrogen concentrations up to 6.0%) and then enters the electric heater section where it is heated to approximately 1225-1400°F causing recombination to occur. Tests have verified that the recombination is not a catalytic surface effect associated with the heaters, but occurs due to the increased temperature of the process gases. Since the phenomenon is not a catalytic effect, poisoning of the unit as by fission products will not occur. The heater section consists of five assemblies of electric heaters stacked vertically. Each assembly contains individual heating elements. Operation of the unit is virtually unaffected in the event of a few individual heating elements failing to function properly.

Objective #7

The recombiners are equipped with chromel-alumel thermocouples with a reference junction monitored with an RTD. Digital temperature meters are provided on the Hydrogen Recombiner Heater Temperature Monitor Panel **(refer to Drawing 7.3)** located in the MG set rooms. The display is normally off but may be operated if desired by:

1) Power on
2) Unit will perform self diagnostics and
   Return: Command?,
3) Press AUTO key.

The unit will display sequentially the three thermocouples points (numbered 1, 2, 3) and the reference junction temperature (number 4). The value for the reference junction is not fixed and is used to perform reference junction compensation for the thermocouples inputs. The three thermocouples provide recombiner temperature indication during testing. Temperature indication is not required during a LOCA, so the thermocouples portion of the recombiners is non-safety related, and both trains are on the same panel.

ACTION/EXPECTED RESPONSE	RESPONSE NOT OBTAINED

1. **Select one train of H_2 Recombiner to be placed in service:**

__ • To start 1A H_2 Recombiner, GO TO Step 2.

OR

__ • To start 1B H_2 Recombiner, GO TO Step 5.

2. **Determine 1A H_2 Recombiner power setting as follows:**

__ a. Determine "PRESSURE FACTOR, CP" from Data Book Curve 1.8.

__ b. Multiply "1A REFERENCE POWER" listed on Data Book Curve 1.8 by "PRESSURE FACTOR, CP" to determine 1A Hydrogen Recombiner Power Setting.

1A: _____ x _____ = _____
"1A REFERENCE POWER" "PRESSURE FACTOR, CP" 1A Power Setting

__ c. Record "1A POWER SETTING" _____.

SYS033 A1.02 - Spent Fuel Pool Cooling System (SFPCS)
Ability to predict and/or monitor changes in parameters (to prevent exceeding design limits) associated with Spent Fuel Pool Cooling System operating the controls including: (CFR: 41.5 / 45.5)
Radiation monitoring systems .....

Given the following events and conditions associated with the Unit 1 SFP:

- A Lo-Lo alarm is received for OAC point M1A0004 (SFP Level)
- The operators read (-)2.1 ft SFP level and steady on the main control board
- The operating KF pump has tripped
- An NEO reports a large leak in the auxiliary building but the leak has now slowed to a trickle

For the event described above the leak must be associated with the KF pump __(1)__ piping and __(2)__ would be utilized to monitor increasing radiation levels associated with the loss of SFP level.

Which ONE (1) of the following completes the statement above?

A. 1. discharge
   2. 1EMF-42 (U-1 Spent Fuel Bldg Vent)

B. 1. discharge
   2. 1EMF-17 (Spent Fuel Bldg Refuel Brdg)

C. 1. suction
   2. 1EMF-42 (U-1 Spent Fuel Bldg Vent)

D. 1. suction
   2. 1EMF-17 (Spent Fuel Bldg Refuel Brdg)

General Discussion

In the scenario described in the stem of this question, the indication provided would be consistent with a SFP cooling system leak associated with the discharge piping. The design of the piping is such that the hole drilled in the discharge piping located 2 feet below the normal level (Indication of 0 feet) act as a siphon breaker. With the pump tripped, this type of leak should slow to a trickle once level goes below this value.

1EMF-17 is an area monitor located on the refueling bridge and would be the most direct indication of any increase in rad levels associated with the falling SFP level. 1EMF-42 uses a beta gas detector which monitors the SFP ventilation rad levels. However, 1EMF-42 is designed to detect fuel failure based on the release of fission product gases. 1EMF-42 is located in the ventilation ducting in another building from the SFP and is shielded from background radiation. For the scenario described, there would be no effect on 1EMF-42 indication.

Answer A Discussion

INCORRECT: See explanation above.

PLAUSIBLE: Part (1) is correct and therefore plausible.

Part (2) is plausible because it does monitor radiation levels associated with the SFP building ventilation system and if the applicant misinterprets the indicated level to be low enough to cause extreme radiation level this would be a reasonable answer.

Answer B Discussion

CORRECT: See explanation above.

Answer C Discussion

INCORRECT: See explanation above.

PLAUSIBLE: Part (1) is plausible if the applicant confuses the siphon breaker location to be on the suction piping verses the discharge piping.

Part (2) is plausible because it does monitor radiation levels associated with the SFP building ventilation system and if the applicant misinterprets the indicated level to be low enough to cause extreme radiation level this would be a reasonable answer.

Answer D Discussion

INCORRECT: See explanation above.

PLAUSIBLE: Part (1) is plausible if the applicant confuses the siphon breaker location to be on the suction piping verses the discharge piping.

Part (2) is correct and therefore plausible.

Basis for meeting the KA

There is no direct correlation between the ability to monitor Radiation Monitor System parameters to "prevent exceeding design limits" associated with the Spent Fuel Pool Cooling System. However, for this particular question the applicant is asked to evaluate a given set of conditions and predict the minimum design SFP level which would be expected if leak developed on the discharge piping for the Spent Fuel Pool cooling pump. Additionally, the applicant is asked to identify which EMF could be used to verify the presence of a leak and that the leak has stopped. For example, in addition to the fact that SFP level has stopped decreasing, the Operator could use 1EMF-17 as rad monitor indication would initially increase due to lowering SFP level and then stop increasing when the leak stops).

Basis for Hi Cog

This is a hi cog question because it involves a level of analysis of given situation, apply system knowledge and solve a problem.

Basis for SRO only

Job Level	Cognitive Level	QuestionType	Question Source
RO	Comprehension	BANK	Bank MNS FHKFN01

Development References

Lesson Plan OP-MC-FH-KF Page 27 (Rev 30)

OP-MC-FH-KF Obj. 7

Student References Provided

SYS033 A1.02 - Spent Fuel Pool Cooling System (SFPCS)

Ability to predict and/or monitor changes in parameters (to prevent exceeding design limits) associated with Spent Fuel Pool Cooling System

operating the controls including: (CFR: 41.5 / 45.5)

ıdiation monitoring systems .....

401-9 Comments:

Remarks/Status

401-9 Comments:

The distractor analysis said 1EMF-42 will have little to no effect. If "A" is marginally correct then it can be arguably correct. Therefore, 2 potentially correct answers exist. This must be re-evaluated.
This Q is U until resolved due to 2 possible correct answers.

Resolution / Comments:

The discussion should have stated that 1EMF-42 will have "no effect" instead of "little to no effect". This event would be dealt with via entry into AP-41 (Loss of Spent Fuel Pool Cooling or Level). An alarm on 1EMF-17 is one of the symptoms that prompts entry into AP-41. There is plausibility for 1EMF-42 in that an alarm on this monitor would prompt entry into AP-25 (Spent Fuel Damage). However, 1EMF-42 is a beta gas monitor and will only respond if there is damage to the fuel in the SFP. Revised the discussion and distracter analysis for A2 and C2. See attached file for proposed changes to the discussion and distracter analysis.

Question 35 References:

OP-MC-FH-KF Obj. 12

OBJECTIVES

	OBJECTIVE	NLO	NLOR	LPRO	LPSO	LOR
1	State the purpose of the Spent Fuel Pool Cooling System.	X	X	X	X	
2	Draw a simplified diagram of the Spent Fuel Pool Cooling System (including all major components) per Training Drawing 7.1, Spent Fuel Pool Cooling System - Simplified.	X	X	X	X	
3	State the flowrates through each of the following flowpaths: • Spent Fuel Pool Cooling Loop • Spent Fuel Pool Purification Loop • Spent Fuel Pool Skimmer Loop	X	X	X	X	
4	List the sources of makeup to the Spent Fuel Pool Cooling System; including the source grade (i.e., borated, non-borated demineralized, and non-borated lake water).	X	X	X	X	
5	Explain the conditions which would require *"assured makeup"*, from the Nuclear Service Water System, to the Spent Fuel Pool Cooling System.	X	X	X	X	X
6	List the power supply for the following Spent Fuel Pool Cooling System Pumps (Unit 1 and Unit 2): • KF Pump(s) • KF Skimmer Pump(s)	X	X	X	X	
7	Describe the controls, indications, and/or alarms, associated with Spent Fuel Pool Cooling System operation, located <u>within</u> the <u>Control Room</u>.			X	X	X
8	Describe how the KF Pump motor(s) is cooled during system operation.	X	X	X	X	
9	State the cooling medium for the Spent Fuel Pool Cooling System Heat Exchanger(s).	X	X	X	X	
10	Describe the controls, indications, and/or alarms, associated with Spent Fuel Pool Cooling System operation, located <u>outside</u> the <u>Control Room</u>.	X	X	X	X	

From Lesson Plan OP-MC-FH-KF Page 27 (Rev 30)

The Spent Fuel Pool stores fuel assemblies approximately 33 feet 4 inches below the fuel pool operating deck with approximately 25 feet of borated water above the top of each fuel assembly.

Objective # 7

Control Room Indication is provided for Spent Fuel Level and Temperature. *(Refer to Training Drawing 7.3, Spent Fuel Pool Control Room Indication.)*

In each of the Spent Fuel Pools and refueling cavities there is an Aztec Level Gauge. The angle iron pointing out into the water is at elevation 771' 4¾". This is the normal design level and corresponds to "0" on the gauge in the Control Room. Each step on the side edge of the gauge is two inches. (Refer to picture 7.5)

2.2 Spent Fuel Pool Cooling Pumps

Objective # 7

Two Spent Fuel Pool Cooling Pumps (KF Pumps) are provided for each Unit. The controls and indications, associated with Spent Fuel Pool Cooling Pump operation, located on the Main Control Board (MC-11), consist of the following:

* START / STOP Control Switch

  These momentary START / STOP pushbuttons allow the operator to START and STOP the pump, as desired.

  During a Blackout the KF Pump(s) will initially lose power *(load shed)* but receive a *manual start permissive* when Load Group 9 is loaded onto the bus.

  During a Safety Injection Signal, the KF Pump(s) running prior to SI will continue to run. The KF Pump(s) *not running*, prior to SI, will receive a *manual start permissive* when Load Group 9 is loaded onto the bus.

  Any KF Pump(s) running or manually started, while the SI Signal is present, **cannot** be stopped until the *SI Signal is RESET.*

* ON / OFF (Red / Green) Indicating Lights

  These ON / OFF (Red / Green) indicating lights are mounted on the START / STOP Control Switch and provide indication when the KF Pump breaker is CLOSED (ON) or OPEN (OFF).

Typical flow through the heat exchanger and purification loop is 2500 gpm combined (approximately 2200 gpm through Hx and 300 gpm through purification). Each pump is designed for 3050 gpm and limited by procedure to 2900 gpm, and each takes suction from the Spent Fuel Pool, *four feet below pool level,* and discharge back into the Spent Fuel Pool, *six feet above the fuel assemblies.* Holes drilled into the Spent Fuel Pool Discharge Header act as a vacuum breaker and limit siphon draining to two feet below normal Spent Fuel Pool level.

From Lesson Plan OP-MC-FH-KF Page 53 (Rev 30)

Abnormal Operating Procedure AP/1(2)/A/5500/25, Spent Fuel Damage, is provided to identify operator actions required during a spent fuel damage event. Actions are defined for spent fuel damage inside Containment or within the Spent Fuel Pool. This procedure has only a single Case and the Symptoms are:

* EMF-36, Unit Vent High Gas Radiation Alarm (Process Monitor)
    * EMF-38, Containment High Particulate Radiation Alarm (Process Monitor)
    * EMF-39, Containment High Gas Radiation Alarm (Process Monitor)
    * EMF-40, Containment High Iodine Radiation Alarm (Process Monitor)
    * EMF-42, Fuel Handling High Gas Radiation Alarm (Process Monitor)
    * EMF-16, Containment Refueling Bridge Alarm (Area Monitor)
    * EMF-17, Spent Fuel Building Bridge Alarm (Area Monitor)
    * Gas bubbles originating from the damaged assembly(ies).
    * Visual evidence of damage with potential of radioactive release(s).

Subsequent operator action(s) will first determine the damaged fuel location. The area affected (Containment or the Spent Fuel Pool) must be evacuated and isolated. Those personnel evacuated must be assembled for accountability while remote action(s) are performed to further secure the event to ON-SITE. In addition, the event must be classified and implementation of the Emergency Plan initiated, if required.

Parent Question

Question 375 FHKFN01 FHKFN01

1 Pt(s) Unit 1 is operating at 100% power when the OAC registers a low spent fuel pool level alarm. Given the following events and conditions:

* The operators read -2.1 ft SFP level and steady on the main control board.
* The operating KF pump has tripped.
* An NLO reports a large leak in the auxiliary building.
* Normal SFP makeup is not available.

Which one of the following statements correctly describes the corrective action for this event?

A. Find and isolate the leak on the KF discharge piping.

B. Find and isolate the leak on the KF suction piping.

C. Initiate assured makeup due a leak on the discharge piping.

D. Initiate assured makeup due to a leak on the suction piping.

SYS035 K1.01 - Steam Generator System (S/GS)
Knowledge of the physical connections and/or cause-effect relationships between the S/GS and the following systems: (CFR: 41.2 to 41.9 / 45.7 to 45.8)
MFW/AFW systems .....

Given the following conditions on Unit 1:

- A unit shutdown is in progress
- Operators have blocked the CA Auto-Start signal
- At 0200 both Main Feed Pumps trip

Given the following plant conditions and times:

	Time				
Condition	**0200**	**0205**	**0210**	**0215**	**0220**
Tave (°F)	551	552	552	553	554
NC Press. (PSIG)	1951	1953	1958	1951	1957
NR SG A (%)	24	16	25	18	10
NR SG B (%)	26	18	22	14	9
NR SG C (%)	28	20	26	13	8
NR SG D (%)	23	15	16	19	9

Which ONE (1) of the following lists the EARLIEST time that the Turbine Driven CA pump would have automatically started?

A. 0205

B. 0210

C. 0215

D. 0220

General Discussion

The Turbine Driven CA Pump will auto-start when NR level on any two SGs decreases to less than 17%. For the conditions given, the Turbine Driven CA Pump will auto-start at 0205.

Answer A Discussion

CORRECT: See explanation above.

Answer B Discussion

INCORRECT: See explanation above.

PLAUSIBLE: This answer is plausible if the applicant concludes that NC system pressure must increase above the P-11 setpoint to automatically unblock the CA Auto-Start Defeat AND also believes that only one SG less than 17% is required to generate a TD CA pump auto-start. However, the Auto-Start Defeat only applies to the MD CA pumps, not the TD CA pump.

Answer C Discussion

INCORRECT: See explanation above.

PLAUSIBLE: This answer is plausible if the applicant concludes that NC system pressure must increase above the P-11 setpoint to automatically unblock the CA Auto-Start Defeat since two of the SG NR levels are less than the 17% level required for a TD CA pump auto-start. However, the Auto-Start Defeat only applies to the MD CA pumps, not the TD CA pump.

Answer D Discussion

INCORRECT: See explanation above.

PLAUSIBLE: This answer is plausible if the applicant concludes that NC system pressure must increase above the P-11 setpoint to automatically unblock the CA Auto-Start Defeat AND that all four SG NR levels must be less than 17% to generate a TD CA pump auto-start signal. However, the Auto-Start Defeat only applies to the MD CA pumps, not the TD CA pump.

Basis for meeting the KA

The KA is matched because the applicant must understand the cause-effect relationship between SG level and the auto-start signals generated for the AFW (CA) system.

Basis for Hi Cog

This is a higher cognitive level question because the applicant must associate multiple pieces of information to arrive at the correct answer. First, the applicant must recall from memory the coincidence and setpoint for the TD CA pump start and the effect of the CA Auto-Start Defeat on CA pump operation (MD CA pumps only). Then, the applicant must compare the information given in the table to the setpoint and coincidence recalled from memory to determine the correct answer. Since this question requires more than one mental step to arrive at the correct answer, it is a higher cognitive level question.

Basis for SRO only

Job Level	Cognitive Level	QuestionType	Question Source
RO	Comprehension	BANK	MNS Exam Bank Question #CFCAN010

Development References	Student References Provided
Lesson Plan OP-MC-CF-CA Section 2.2 Learning Objective OP-MC-CF-CA #4	

SYS035 K1.01 - Steam Generator System (S/GS)

Knowledge of the physical connections and/or cause-effect relationships between the S/GS and the following systems: (CFR: 41.2 to 41.9 / 45.7 to 45.8)

MFW/AFW systems .....

401-9 Comments:	Remarks/Status
	401-9 Comments: No comment. ---------- ---------- Resolution / Comments:

N/A

Question 36 References:

From Lesson Plan OP-MC-CF-CA Section 2.2:

Objective # 4

Refer to Figure 7.12. **The auto-start signals for the CA Turbine Driven pump (which open SA-48ABC and SA-49AB) are:**

- **2/4 detectors low-low level in any two SGs (17%)**
- **Blackout (> 8 seconds)**
- **1/1 detector from SSF SG Wide Range Low-Low Level on 2/4 SGs (72%) (only opens SA-48ABC)**

NOTE: If a Blackout occurs first followed by a Safety Injection, the Sequencer will reset the start signal to the Turbine Driven CA Pump. If the Turbine Driven CA Pump is running at the time of the Safety Injection, it will continue to run. If the Safety Injection occurs first or coincident with the Blackout, the Safety Injection will BLOCK the Turbine Driven CA Pump start because the sequencer selects the Priority Mode. (This does not affect the Low-Low SG Level auto start signal or the SSF Low-Low Level start signal.)

NOTE: The turbine driven pump will also start on loss of VI to the actuator or loss of power to the solenoid valves, due to the fail-open design of the valves (not considered an ESF actuation.)

Operation of the following breakers may result in a Turbine Driven CA pump auto-start and a BB and NM valve auto-closure:

- 1EVDA-12A, T/D Aux Feedwater Pump Train A Auto Start and Reset Controls
- 1EVDD-6A, T/D Aux FWPT Train B Auto Start and Reset Controls
- 2EVDA-11A, T/D Aux Feedwater Pump Train A Auto Start and Reset Controls
- 2EVDD-17A, Turb Driven Aux Sol Valve 2SASV049

Opening these breakers will result in a Turbine Driven CA Pump auto-start signal due to 1(2)SA-48 and 1(2)SA-49 failing open. If an auto-start signal is generated an auto-closure of the BB and NM valves will occur.

The bearing oil of the TD CA Pump is cooled utilizing a small heat exchanger at the pump. The cooling medium is the fluid moving through the pump (CA system water).

Parent Question:

CFCAN010

1 Pt

During a plant shutdown on Unit 1, the operators have blocked the CA auto-start signal by depressing the auto-start defeat switch. A subsequent loss of both main feedwater pumps occurred at 0200.

Given the following plant conditions at the times listed:

	Condition	Time 0200	0205	0210	0215	0220
1)	Tave (°F)	551	552	552	553	554
2)	NCS pressure (psig)	1951	1953	1958	1951	1957
3)	NR SG A (%)	24	16	25	18	10
4)	NR SG B (%)	26	18	22	14	9
5)	NR SG C (%)	28	20	26	13	8
6)	NR SG D (%)	23	15	16	19	9

What time would the Turbine Driven CA Pump start automatically?

A. 0205

B. 0210

C. 0215

D. 0220

Answer 938

A

Objective 4

SYS045 K5.23 - Main Turbine Generator (MT/G) System

nowledge of the operational implications of the following concepts as the apply to the MT/B System: (CFR: 41.5 / 45.7)

elationship between rod control and RCS boron concentration during T/G load increases .....

Given the following conditions on Unit 1:

- Reactor Power is currently being increased from 55% to 90% RTP at 3%/hr following a Refueling Outage

1. How is the withdrawal of control rods affected?

2. What changes (if any) to NCS boron concentration will be required?

REFERENCE PROVIDED

A. 1. NOT restricted
   2. Dilution is required.

B. 1. NOT restricted
   2. Dilution is NOT required.

C. 1. Restricted
   2. Dilution is required.

D. 1. Restricted
   2. Dilution is NOT required.

General Discussion

With conditions given, the plant is above the conditioned power level therefore above 40% RTP, rod withdrawal is restricted to less than 3 steps per hour per the rod maneuvering limit guidance in the U-1 Data book. This restriction on Rod movements would result in additional dilutions required to compensate for the negative reactivity associated with power defect during the power escalation.

Answer A Discussion

INCORRECT: See explanation above.

PLAUSIBLE: Part 1 is plausible if the applicant does not recall the effect of unconditioned fuel on rod movement. The applicant may conclude based on plant conditions that there is no restriction on control rod movement under the conditions given.

Part 2 of the question is correct and therefore plausible.

Answer B Discussion

INCORRECT: See explanation above.

PLAUSIBLE: Part 1 is plausible if the applicant does not recall the effect of unconditioned fuel on rod movement. The applicant may conclude based on plant conditions that there is no restriction on control rod movement under the conditions given.

Part 2 is plausible if the applicant confuses the effect of Xenon in the scenario described in the stem. On a power escalation after a runback, Xenon would burning out and adding positive reactivity.

Answer C Discussion

CORRECT: See explanation above.

Answer D Discussion

INCORRECT: See explanation above.

PLAUSIBLE: Part 1 is correct and therefore plausible.

rt 2 is plausible if the applicant confuses the effect of Xenon in the scenario described in the stem. On a power escalation after a runback, enon would burning out and adding positive reactivity.

Basis for meeting the KA

This K/A is matched because the question is relating the effect of a T/G load increase during an initial power escalation with unconditioned fuel. The applicant must evaluate how this would affect the relationship between Rod control and RCS boron concentration due to the limitations imposed on rod movement.

Basis for Hi Cog

This is a hi cog question because it involves a level of analysis of given situation, apply system knowledge and solve a problem of what both would be the effect and how the conditions given in the stem would affect operation. It also requires more than one mental step to arrive at the correct answer and is therefore a higher cognitive level question.

Basis for SRO only

Job Level	Cognitive Level	QuestionType	Question Source
RO	Comprehension	NEW	

Development References

Lesson Plan OP-MC-CTH-CP (Rev 11) Pages 135, 171, 173 &175

OP-MC-CTH-CP Obj: 29

Student References Provided

Data Book Sect. 1.3 Enc. 4.3

SYS045 K5.23 - Main Turbine Generator (MT/G) System

Knowledge of the operational implications of the following concepts as the apply to the MT/B System: (CFR: 41.5 / 45.7)

Relationship between rod control and RCS boron concentration during T/G load increases .....

01-9 Comments:

Remarks/Status

401-9 Comments:

Of the 4 bullets: I think you can delete all but the second bullet.

QUESTION 37

2537

C

In Stem 1. add "at 3% per hr"
In C1 and D1 state "Control rod withdrawal is restricted.
In A1 and B1 cap the word "NOT"
Change B2 and D2 to "No dilution will be required because Xenon burnout will compensate for the power defect"

Resolution / Comments:

Deleted last two bullets. You need the first two bullets as a minimum. Made the rest of changes as recommended by Lead Examiner. See attached file for proposed revision to question.

Question 37 References:

SEQ	OBJECTIVE	NLO	NLOR	LPRO	LPSO	LOR
26	Given a set of plant parameters and/or system conditions, associated with the recovery of a misaligned / dropped rod, determine the appropriate recovery limits. CTHCP026		X	X	X	X
27	Given a set of plant parameters or system conditions, associated with the recovery of a misaligned / dropped rod, discuss the basis for the appropriate recovery limits. CTHCP027		X	X	X	X
28	Discuss the basis for the Fuel Maneuvering Limits. CTHCP028		X	X	X	X
29	Given the Fuel Maneuvering Limits, evaluate a given set of plant conditions and determine the allowable loading / rod withdrawal rates. CTHCP029		X	X	X	X
30	Concerning the Technical Specifications related to Control Bank Insertion Limits, AFD, QPTR, and RCS Pressure, Temperature, and Flow DNB Limits:					
	• Given the LCO title, state the LCO (including any COLR values) and applicability.			X	X	X
	• State the REQUIRED ACTION(s) and COMPLETION TIME for action(s) with completion times of one hour or less.			X	X	X
	• Given a set of parameter values or system conditions, determine if any Technical Specification LCO(s) is (are) not met and any action(s) required within one hour.			X	X	X
	• Given a set of plant parameters or system conditions and the appropriate Technical Specification(s), determine the REQUIRED ACTION(s) and COMPLETION TIME(s).			X	X	X
	• Discuss the bases for a given Technical Specification LCO. CTHCP030			X	X	X

From Lesson Plan OP-MC-CTH-CP Pg. 135 (Rev 11)

POWER LEVEL

Increasing reactor power (steam demand) results in two changes, one direct and one indirect, which affect power distribution:

Redistribution (Direct Effect)

Control Rod Movement (Indirect Effect)

The first effect is the result of the variation in core ΔT with Reactor Power Level. As power is increased with turbine load, the core ΔT will rise from almost 0oF at zero power to 58oF at full power. As a result the moderator in the upper portions of the core becomes progressively warmer and less dense relative to the bottom. The increasing density difference will force power toward the bottom of the core as evidenced by AFD becoming more negative . The strength of this "redistribution" effect is dependent on the value of the moderator temperature coefficient (MTC). At BOC when the MTC is small and negative, the redistribution effect is small. As the MTC becomes more negative with Burnup, the redistribution effect will become more pronounced.

The second (indirect effect) is caused by the movement of control rods necessary to compensate, in part, for the power defect. As power is raised positive reactivity must be added in order to compensate for the negative reactivity associated with the power defect. Any rod withdrawal will tend to allow more power to be produced in the upper portions of the core, resulting in a tendency for AFD to become more positive.

In practice the control rods are moved as necessary to offset the redistribution effect thereby maintaining a relatively constant axial power distribution. This is accomplished by coordinating reactor coolant boron concentration with rod position as necessary to maintain AFD on Target during the power escalation.

From Lesson Plan OP-MC-CTH-CP Pg. 171,173 & 175 (Rev 11)

3.3 Fuel Maneuvering Limits

Objective # 28

The Fuel Maneuvering Limits apply to power increases ONLY. These maneuvering limits are tied to REACTOR POWER not Turbine or Generator Power.

These limits are based on limiting or preventing PCI *(Pellet-Clad Interaction).* The primary concern is centered around previously used fuel and not new *(fresh)* fuel. Handling "burned" fuel, coupled with the fact that "burned" fuel has experienced fuel pellet cracking, can result in the movement of small pellet fragments. A gradual controlled increase in power will allow pellet and cladding expansion to somewhat equalize, as the fuel and cladding heat up.

Objective # 29

Fuel Maneuvering Limits

POWER RAMP RESTRICTIONS

Recommended ramp = 3% / hour, CPL – 100% FP

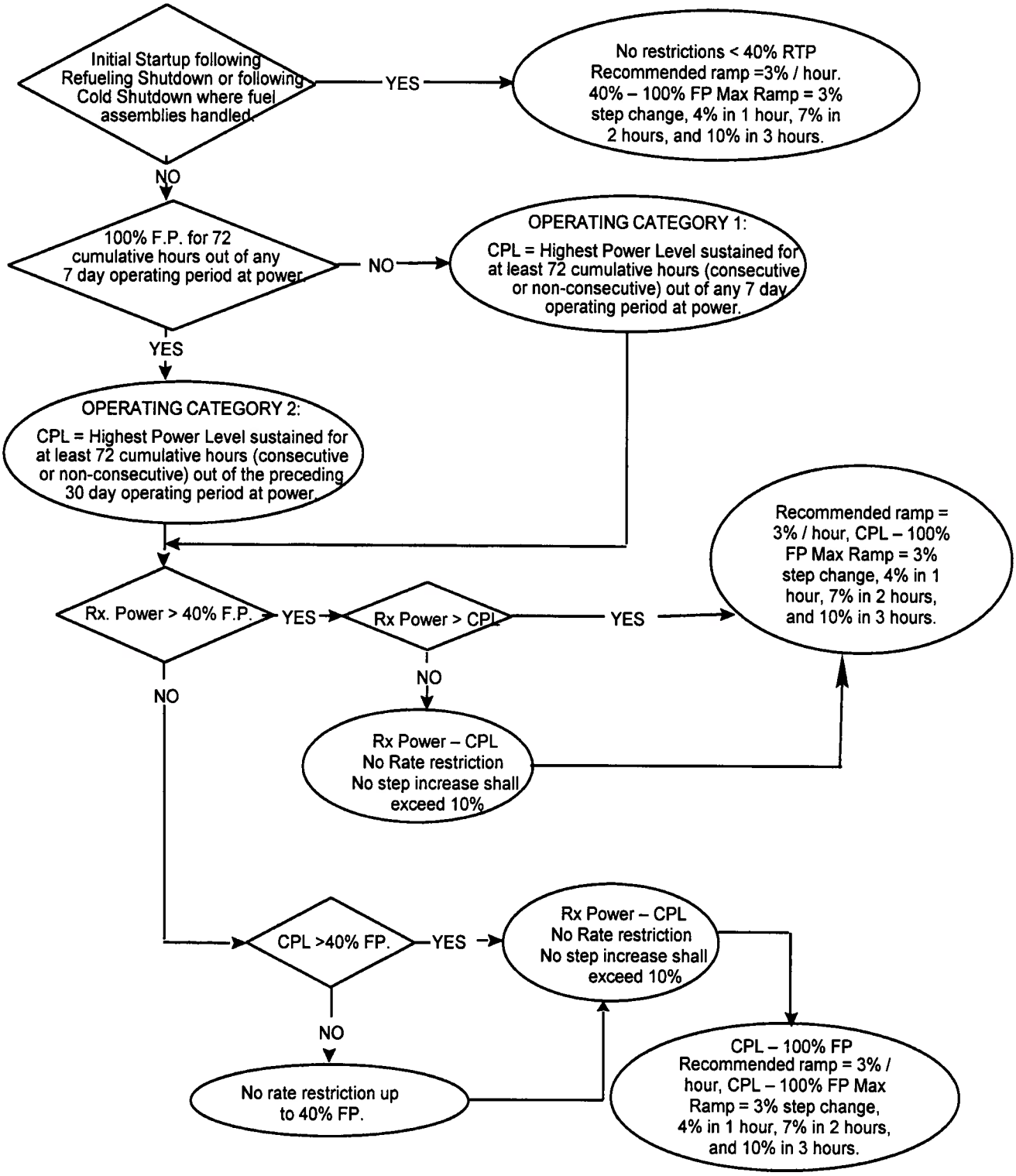

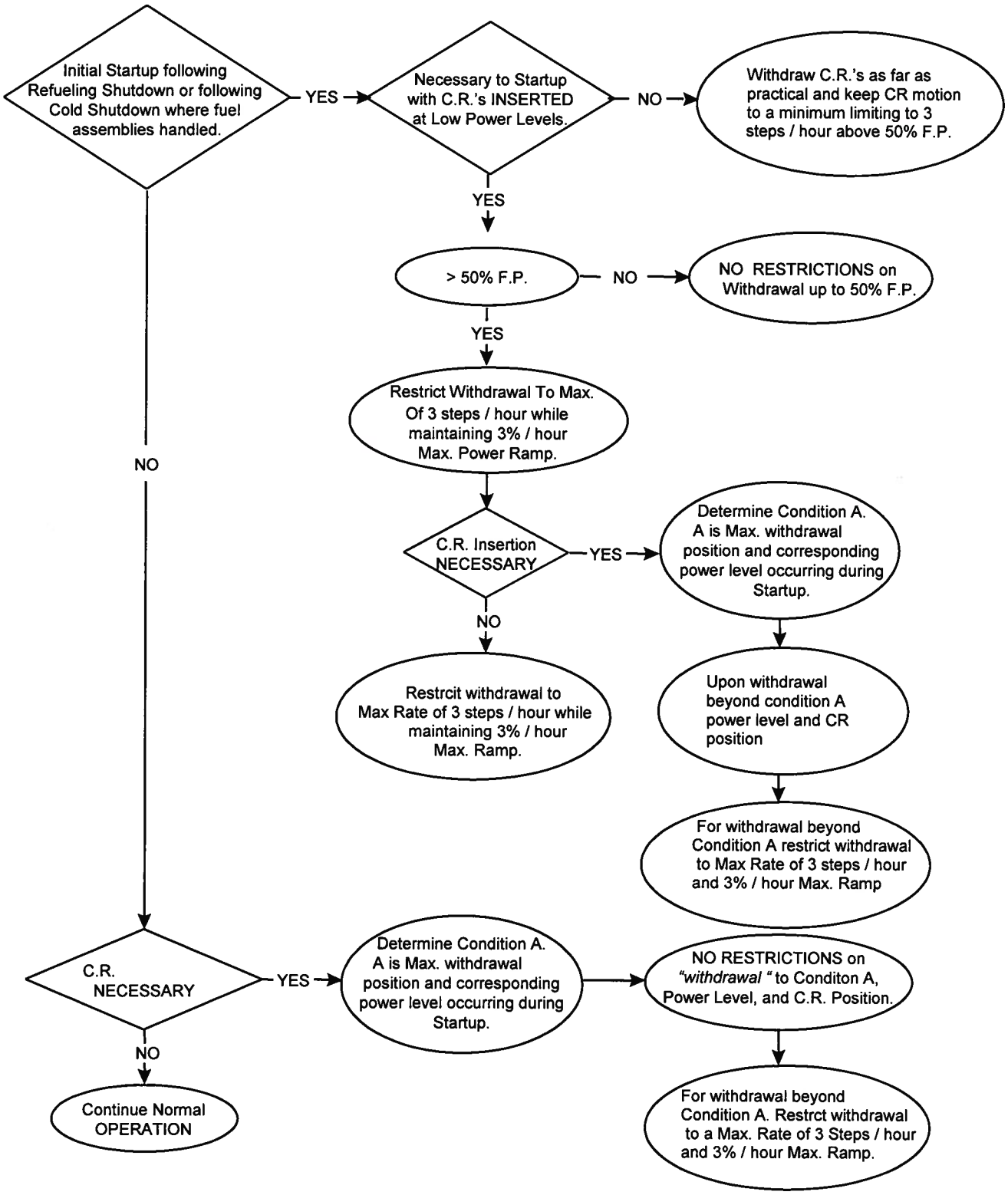
Initial Startup following Refueling Shutdown or following Cold Shutdown where fuel assemblies handled.
YES
Necessary to Startup with C.R.'s INSERTED at Low Power Levels.
NO
Withdraw C.R.'s as far as practical and keep CR motion to a minimum limiting to 3 steps / hour above 50% F.P.
YES
> 50% F.P.
NO
NO RESTRICTIONS on Withdrawal up to 50% F.P.
YES
Restrict Withdrawal To Max. Of 3 steps / hour while maintaining 3% / hour Max. Power Ramp.
NO
C.R. Insertion NECESSARY
YES
Determine Condition A. A is Max. withdrawal position and corresponding power level occurring during Startup.
NO
Restrcit withdrawal to Max Rate of 3 steps / hour while maintaining 3% / hour Max. Ramp.
Upon withdrawal beyond condition A power level and CR position
For withdrawal beyond Condition A restrict withdrawal to Max Rate of 3 steps / hour and 3% / hour Max. Ramp
C.R. NECESSARY
YES
Determine Condition A. A is Max. withdrawal position and corresponding power level occurring during Startup.
NO RESTRICTIONS on "withdrawal " to Conditon A, Power Level, and C.R. Position.
NO
Continue Normal OPERATION
For withdrawal beyond Condition A. Restrct withdrawal to a Max. Rate of 3 Steps / hour and 3% / hour Max. Ramp.

SYS071 K4.06 - Waste Gas Disposal System (WGDS)
nowledge of design feature(s) and/or interlock(s) which provide for the following: (CFR: 41.7)
ampling and monitoring of waste gas release tanks .....

Given the following plant conditions:

- Waste Gas Decay Tank 'A' is aligned for planned release
- Waste Gas Decay Tank 'E' is also mistakenly aligned for release while in service
- EMF-50 (L) Waste Gas Discharge is not detecting release activity

Which ONE (1) of the following would be the result if the release exceeds expected activity levels?

A. The release is monitored by 2EMF-36(L) (Unit 2 Unit Vent Gas). However, no automatic termination will occur.

B. The release is monitored by 2EMF-36(L) which will automatically terminate the release if a Trip 2 alarm is reached.

C. The release is monitored by 1EMF-36(L) (Unit 1 Unit Vent Gas). However, no automatic termination will occur.

D. The release is monitored by 1EMF-36(L) which will automatically terminate the release if a Trip 2 alarm is reached.

General Discussion

In the conditions given, a misalignment has resulted in EMF-50 not being aligned to properly monitor the WGDT release. The WG release is monitored by two EMF's, the primary is EMF-50 and the secondary is the U-1 Unit Vent gaseous monitor 1EMF-36L. Activity detected resulting in a Trip 2 on either one of these monitors will result in a termination of the release due to the resulting auto closure of WG-160. The release will still be monitored and auto termination is still functional.

Answer A Discussion

INCORRECT: See explanation above.

PLAUSIBLE: First part is plausible if the applicant confuses 1EMF-36L and 2EMF-36L.

Second part is plausible if the applicant does not recall that the release can be terminated by the Waste Discharge monitor (EMF-50) or the Unit Vent Monitor (1EMF-36L).

Answer B Discussion

INCORRECT: See explanation above.

PLAUSIBLE: First part is plausible if the applicant confuses 1EMF-36L and 2EMF-36L.

Second part is plausible because the Unit Vent Monitor will terminate the release on a Trip 2 alarm. However, it is 1EMF-36L instead of 2EMF-36L.

Answer C Discussion

INCORRECT: See explanation above.

PLAUSIBLE: First part is plausible if the applicant confuses 1EMF-36L and 2EMF-36L.

Second part is plausible if the applicant does not recall that the release can be terminated by the Waste Discharge monitor (EMF-50) or the Unit Vent Monitor (1EMF-36L).

Answer D Discussion

CORRECT: See explanation above.

Basis for meeting the KA

This K/A is matched because the waste gas decay tank is being released and the applicant is being asked about both the design features (U-1 Vent release path) and interlocks (Action for EMF Trip 2) with regard to the monitoring capability associated with the release and the tank.

Basis for Hi Cog

Basis for SRO only

Job Level	Cognitive Level	QuestionType	Question Source
RO	Memory	BANK	MNS Q WEWGN03

Development References

Lesson Plan OP-MC-WE-WG Page 29 (Rev 12)

OP-MC-WE-WG Obj. 5

Student References Provided

SYS071 K4.06 - Waste Gas Disposal System (WGDS)
Knowledge of design feature(s) and/or interlock(s) which provide for the following: (CFR: 41.7)
Sampling and monitoring of waste gas release tanks .....

401-9 Comments:

Remarks/Status

401-9 Comments:

Distrsactors A and B are NP because there is no case where an isolation will not occur without a malfunction. Replace A and B. This Q is U because of 2 NP distractors.

QUESTION 38 2538 D

Resolution / Comments:

Believe there is plausibility for "A" and "B". Will discuss. Have developed a proposed replacement question if this question is still unacceptable. See attached file for proposed replacement question.

Did not use revised question. Revised distracter A in original question. Rearranged distacters. New correct answer is D. Need to work on distracter analysis.

Question 38 References:

OP-MC-WE-WG Obj. 5

OBJECTIVES

	OBJECTIVE	NLO	NLOR	LPRO	LPSO	LOR
1	State the purpose of the Waste Gas (WG) System. WEWG001	X	X	X	X	X
2	Describe the system flowpath during normal operation, shutdown operation and waste gas discharge. WEWG002	X	X	X	X	X
3	List four components that discharge waste gas into the WG Header. WEWG003	X	X	X	X	X
4	List two types of non-radioactive waste gas discharged into the WG Header. WEWG004	X	X	X	X	X
5	List the WG Discharge Flow Controller (WG-160) trips. WEWG005	X	X	X	X	X
6	Concerning the Selected Licensee Commitments (SLC) related to the WG System:					
	• Discuss any commitments and their applicability.			X	X	X
	• For any commitments that have action required within one hour, state the action.			X	X	X
	• Given a set of parameter values or system conditions, determine if any commitment is (are) not met and any action(s) required within one hour.			X	X	X
	• Discuss the basis for a given commitment.					
	*** SRO only** WEWG007				X	*

From Lesson Plan OP-MC-WE-WG Page 29 (Rev 12)

Objective #5

1WG160, Waste Gas Discharge Flow Controller trips closed when:

* ***Unit vent gas 1EMF36(L) (Unit 1 only) trip two setpoint is reached.***
* ***Waste gas 0EMF50(L) trip two setpoint is reached.***

Waste Gas Radiation Monitor (2 channels) and Plant Vent Radiation Monitor are indicated on the Waste Gas Processing Panel.

Alarms

The following annunciators alarm on the Waste Gas Panel.

* ***Gas Tank Pressure High (One for each of 8 tanks).***
* ***Waste Gas Moisture Separator Level High-Low (2).***
* ***Waste Gas Monitor Radiation High.***
* ***Plant Vent Monitor Radiation High.***
* ***Waste Gas Moisture Separator High Pressure (2).***
* ***Waste Gas Moisture Separator Low Pressure (2).***
* ***Waste Gas Compressor Suction Pressure Low.***
* ***Recombiner No. 1 Alarm.***
* ***Recombiner No. 2 Alarm.***
* ***N_2 Header Supply Pressure Low.***
* ***Primary Makeup Water to Gas Decay Tanks High Volume.***
* ***H_2 Header Supply Pressure Low.***
* ***H_2 Recombiner HX KC Outlet Flow Low (2).***
* ***Waste Gas Compressor HX KC Flow Low (2).***

Any of these alarms will actuate the Waste Gas Panel Trouble Annunciator in the Control Room

0.1. Abnormal and Emergency Operation

None

Parent Question WEWGN03

Question 38 WEWGN03 WEWGN03
1 Pt. Given the following conditions:

- Waste Gas Decay Tank 'A' is aligned for planned release
- Waste Gas Decay Tank 'E' is also mistakenly aligned for release while in service
- EMF-50 (L) Waste Gas Discharge is not detecting release activity

Which one of the following would be the result of the release if the tanks exceeded Trip 2 expected levels?

A. Release will continue as an unmonitored release

B. 1EMF-36(L) (Unit 1 Unit Vent Gas) Trip 2 will secure the release

C. 2EMF-36(L) (Unit 2 Unit Vent Gas) Trip 2 will secure the release

D. Release is monitored, manual termination required

Answer 38 **B**
FH-KF, section 3.2

EPE007 EK3.01 - Reactor Trip
nowledge of the reasons for the following as the apply to a reactor trip: (CFR 41.5 /41.10 / 45.6 / 45.13)
ctions contained in EOP for reactor trip .....

Given the following conditions on Unit 1:

- A Reactor Trip and Safety Injection have occurred due to a Small-Break LOCA
- The crew has entered E-0 (Reactor Trip or Safety Injection) and has reached Step 7:

"Check ESF Monitor Light Panel on energized train(s)"

This check is performed to prevent ___(1)___ AND to ___(2)___.

Which ONE (1) of the following completes the statement above?

A. 1. water from entering the steam lines due to uncontrolled CA flow
2. ensure Containment release paths are isolated

B. 1. excessive NC system cooldown due to uncontrolled CF flow
2. ensure Containment release paths are isolated

C. 1. water from entering the steam lines due to uncontrolled CA flow
2. ensure automatic actuation of Containment Spray and Containment Isolation Phase B if containment pressure exceeded 3 PSIG

D. 1. excessive NC system cooldown due to uncontrolled CF flow
2. ensure automatic actuation of Containment Spray and Containment Isolation Phase B if containment pressure exceeded 3 PSIG

General Discussion

From E-0 Background Document:

STEP 7 Check ESF Monitor Light Panel on energized train(s):
PURPOSE:
1. To ensure feedwater isolation has occurred.
2. To ensure non-essential containment penetrations (including ventilation penetrations) are isolated.
3. To ensure S/I pumps are running.
4. To ensure the S/I valves are properly aligned for inventory makeup.
BASIS: The ESF monitor light panel provides a quick and convenient place for the operator to check the valve positions and pump status.
The CF system is isolated on a CF Isolation signal to prevent uncontrolled filling of any steam generator and the associated excessive NC cooldown that could aggravate the transient, especially if it were a steamline break.
The non-essential containment penetrations are isolated to prevent potential release of radioactive materials from containment.
S/I provides makeup inventory to the NC for cooling of the core during accident conditions. Since S/I is actuated, all S/I pumps have a start signal and the operator should ensure they are running.
Although S/I flow is checked in subsequent steps, it is important to ensure all energized trains are properly aligned such that if one train were lost, the other train would still be available.
NOTE: While the valve alignments are being checked in accordance with the Enclosures, the progress through E-0 should be continued.

Answer A Discussion

INCORRECT: See explanation above.

PLAUSIBLE: Part 1 is plausible because the Feedwater Isolation is based on uncontrolled filling of the SGs. However, the basis is to prevent an uncontrolled cooldown. Other steps in E-0 will provide gaining control of CA flow to prevent overfilling the SGs.

Part 2 is correct and therefore plausible.

Answer B Discussion

CORRECT: See explanation above.

Answer C Discussion

INCORRECT: See explanation above.

PLAUSIBLE: Part 1 is plausible because the Feedwater Isolation is based on uncontrolled filling of the SGs. However, the basis is to prevent an uncontrolled cooldown. Other steps in E-0 will provide gaining control of CA flow to prevent overfilling the SGs.

Part 2 is plausible because the requirement to "Check ESF Monitor Light Panel on energized train(s)" for containment spray and phase B is required in Step 13 of E-0 once containment pressure is verified to be > 3 psig. The applicant may misinterpret this requirement to be included in the other monitor light checked contained in Step 7.

Answer D Discussion

INCORRECT: See explanation above.

PLAUSIBLE: Part 1 is correct and therefore plausible.

Part 2 is plausible because the requirement to "Check ESF Monitor Light Panel on energized train(s)" for containment spray and phase B is required in Step 13 of E-0 once containment pressure is verified to be > 3 psig. The applicant may misinterpret this requirement to be included in the other monitor light checked contained in Step 7.

Basis for meeting the KA

The KA is matched because the applicant must know the reasons for checking the ESF Monitor Light Panel during the performance of E-0 (Reactor Trip or Safety Injection).

Basis for Hi Cog

This is a higher cognitive level question because of the high level of analysis required to arrive at the correct answer.

Basis for SRO only

Job Level	Cognitive Level	QuestionType	Question Source
RO	Comprehension	NEW	

Development References

Lesson Plan Objective: EP-E0 #8
References:
1. Background Document for E-0, Step 7

Student References Provided

EPE007 EK3.01 - Reactor Trip
Knowledge of the reasons for the following as the apply to a reactor trip: (CFR 41.5 /41.10 / 45.6 / 45.13)
Actions contained in EOP for reactor trip .....

401-9 Comments:

Remarks/Status

401-9 Comments:

I believe this Q should be hi cog due to the fact that it involves a higher level of analysis.

Resolution / Comments:

Agree. Changed to hig cog and provided justification.

Question 39 References:

From Lesson Plan OP-MC-EP-E0:

STEP 7 Check ESF Monitor Light Panel on energized train(s):

PURPOSE:

1. To ensure feedwater isolation has occurred.
2. To ensure non-essential containment penetrations (including ventilation penetrations) are isolated.
3. To ensure S/I pumps are running.
4. To ensure the S/I valves are properly aligned for inventory makeup.

BASIS: The ESF monitor light panel provides a quick and convenient place for the operator to check the valve positions and pump status.

The CF system is isolated on a CF Isolation signal to prevent uncontrolled filling of any steam generator and the associated excessive NC cooldown that could aggravate the transient, especially if it were a steamline break.

The non-essential containment penetrations are isolated to prevent potential release of radioactive materials from containment.

S/I provides makeup inventory to the NC for cooling of the core during accident conditions. Since S/I is actuated, all S/I pumps have a start signal and the operator should ensure they are running.

Although S/I flow is checked in subsequent steps, it is important to ensure all energized trains are properly aligned such that if one train were lost, the other train would still be available.

NOTE: While the valve alignments are being checked in accordance with the Enclosures, the progress through E-0 should be continued.

From Lesson Plan OP-MC-EP-E0:

STEP 13 Check Containment Pressure - HAS REMAINED LESS THAN 3 PSIG.

PURPOSE: To ensure automatic actuation of Containment Spray and Containment Isolation Phase B if containment pressure exceeded 3 PSIG.

BASIS: If containment pressure exceeds 3 PSIG, containment spray is automatically initiated to mitigate the containment pressure transient. Containment Isolation Phase B valves are closed to isolate additional potential release paths from containment. A Main Steam Isolation should also occur.

The RNO has the operator record the approximate time of reactor trip. The time of trip is required to be known so that operators will know when to align ND aux spray in a subsequent procedure (ES-1.3, Transfer to Cold Leg Recirc).

An operator is dispatched to remove white tags and close the breakers for 1NI-173A and 1NI-178B. This is done to ensure ND Aux spray is available to augment the NS spray, if and when conditions are warranted. The 50 minute time critical action to establish ND Aux spray includes restoring power to 1NI-173A and 1NI-178B.

Since component cooling to the NC pump seals and motors is isolated on a Phase B signal, the NC pumps are tripped to preclude overheating of the seals and motors. However, the NC pump seal flow is maintained to assure the integrity of the NC pressure boundary. Analysis assumes that the NCPs will be secured within 10 minutes of the Phase B signal.

The RV pumps are stopped because the suction flow path is isolated on the Phase B signal.

The H_2 Igniters are energized so that H_2 will be burned in small quantities and not be allowed to accumulate.

From E-0 Step 7

7. **Check ESF Monitor Light Panel on energized train(s):**	
__ a. Groups 1,2,5 - DARK.	__ a. Align valves.
__ b. Group 3 - LIT.	__ b. Open valves.
__ c. OAC - IN SERVICE.	c. Perform the following:
	__ 1) Ensure both trains Phase A Isolation are initiated.
	NOTE OAC driven summary lights in Group 4 will not work. Only components with individual windows need to be checked in next step.
	__ 2) Ensure S/I and Phase A components with individual windows in Group 4 are lit by starting or aligning equipment as required.
	3) Ensure S/I and Phase A valves aligned **PER** the following, while continuing in this EP:
	__ • EP/1/A/5000/G-1 (Generic Enclosures), Enclosure 10 (S/I Valve Checklist)
	__ • EP/1/A/5000/G-1 (Generic Enclosures), Enclosure 11 (Phase A Valve Checklist).
	__ 4) **GO TO** Step 8.

7. (Continued)

__ d. Group 4, Rows A through F - LIT AS REQUIRED.	d. Perform the following: __ 1) Ensure both trains Phase A Isolation are initiated. __ 2) Align or start S/I and Phase A components with individual windows in Group 4 as required. __ 3) GO TO Step 7.f.
__ e. GO TO Step 8.	
__ f. Check LOCA Sequencer Actuated status light (1SI-14) on energized train(s) - LIT.	f. Perform the following on energized train(s), while continuing in this EP: __ 1) Ensure S/I valves aligned PER EP/1/A/5000/G-1 (Generic Enclosures), Enclosure 10 (S/I Valve Checklist)

From E-0 Step 13:

13. **Check Containment Pressure - HAS REMAINED LESS THAN 3 PSIG.**	**Perform the following:**

NOTE The time of reactor trip may be used in subsequent procedures to determine when ND aux containment spray should be aligned.

__ a. Record approximate time of reactor trip.

__ b. Check Monitor Light Group 4, Row G, lit.

c. **IF** any Row G window is dark on energized train(s), **THEN** perform the following:

__ 1) Initiate Phase B and Containment Spray signal.

2) **IF** Row G window is still dark, **THEN** perform the following:

__ • Check OAC Monitor Light Program ("MONL") for Phase B, and align valves.

__ • **IF** OAC is out of service, **THEN** ensure Phase B valves closed **PER** EP/1/A/5000/G-1 (Generic Enclosures), Enclosure 12 (Phase B Valve Checklist), while continuing in this EP.

d. Stop all NC pumps while maintaining

2010 MNS SRO NRC Examination QUESTION 40

2540

D

APE008 AK1.01 - Pressurizer (PZR) Vapor Space Accident (Relief Valve Stuck Open)

Knowledge of the operational implications of the following concepts as they apply to a Pressurizer Vapor Space Accident: (CFR 41.8 / 41.10 / 45.3)

Thermodynamics and flow characteristics of open or leaking valves .....

Given the following conditions on Unit 1:

- The unit is in MODE 3 at full temperature and pressure
- The crew has entered AP/1/A/5500/011 (Pressurizer Pressure Anomalies) due to Pressurizer pressure decreasing very slowly
- Pressurizer pressure is 2150 PSIG
- PRT pressure is 2 PSIG

Given the above conditions, determine which ONE (1) of the following would indicate a leaking PORV and the state of the fluid in the PORV discharge?

REFERENCE PROVIDED

	PORV Discharge Temperature	State of the Effluent
A.	240-280°F	Saturated Vapor
B.	200-240°F	Saturated Vapor
C.	240-280°F	Wet Vapor
D.	200-240°F	Wet Vapor

General Discussion

Required Reference is steam table.
This question is associated with TMI. Per the TMI lesson plan:
It was clear from the operator's understanding of the PZR PORV discharge temperature and the indications of saturation/superheated fluid in the hot leg, that operator knowledge of thermodynamics needed to be drastically improved.
At 0520 the operators obtain a printout of PZR Safety and PORV discharge temperatures showing 232°F and 283°F respectively, but the operators still believe the PORV to be closed. For some time the PORV had been leaking prior to this day. The PORV leakage had been accepted as a normal part of operation (i.e. workaround). The temperature on the discharge of the PZR PORV had indicated what would be seen for PORV open or leaking since the PORV had started leaking. The operators believed the discharge temperature would increase to PZR temperature if the PORV actually opened.

A Pressurizer pressure of 2150 psig (2165 psia) corresponds to a Saturated Vapor Enthalpy of 1125 BTU/lbm. This Enthalpy undergoing a throttling process discharging to a PRT at a pressure of 2 psig (17 psia)

Answer A Discussion

INCORRECT: See explanation above.

PLAUSIBLE. This answer is plausible as this temperature would be obtained if the applicant follows the entropy line from the PRT press to the saturation curve.

Answer B Discussion

INCORRECT: See explanation above.

PLAUSIBLE. This answer is plausible as this temperature would be obtained if the applicant follows the entropy line from the PRT pressure to the saturation curve.

Answer C Discussion

INCORRECT: See explanation above.

PLAUSIBLE. This answer is plausible if the applicant follows the entropy line from the PRT press to the saturation curve.

Answer D Discussion

CORRECT: See explanation above.

Basis for meeting the KA

This KA is matched since the applicant must know how to use the Mollier diagram to determine the thermodynamic characteristics of the fluid entering the PRT during a Pressurizer Vapor Space Accident (i.e. leaking PORV).

Basis for Hi Cog

This is an analysis level because the applicant must evaluate the given conditions using the Mollier diagram to determine the correct temperature and state of the fluid.

Basis for SRO only

Job Level	Cognitive Level	QuestionType	Question Source
RO	Comprehension	BANK	2009 NRC Q40 (Bank 2240)

Development References	
Mollier Diagram	Lesson Plan BNT-TH03R3 Steam Properties

Student References Provided
Steam Tables

APE008 AK1.01 - Pressurizer (PZR) Vapor Space Accident (Relief Valve Stuck Open)
Knowledge of the operational implications of the following concepts as they apply to a Pressurizer Vapor Space Accident: (CFR 41.8 / 41.10 / 45.3)
Thermodynamics and flow characteristics of open or leaking valves .....

401-9 Comments:

Remarks/Status
401-9 Comments: No comment.

QUESTION 40 2540 D

Resolution / Comments:

N/A

Question 40 References

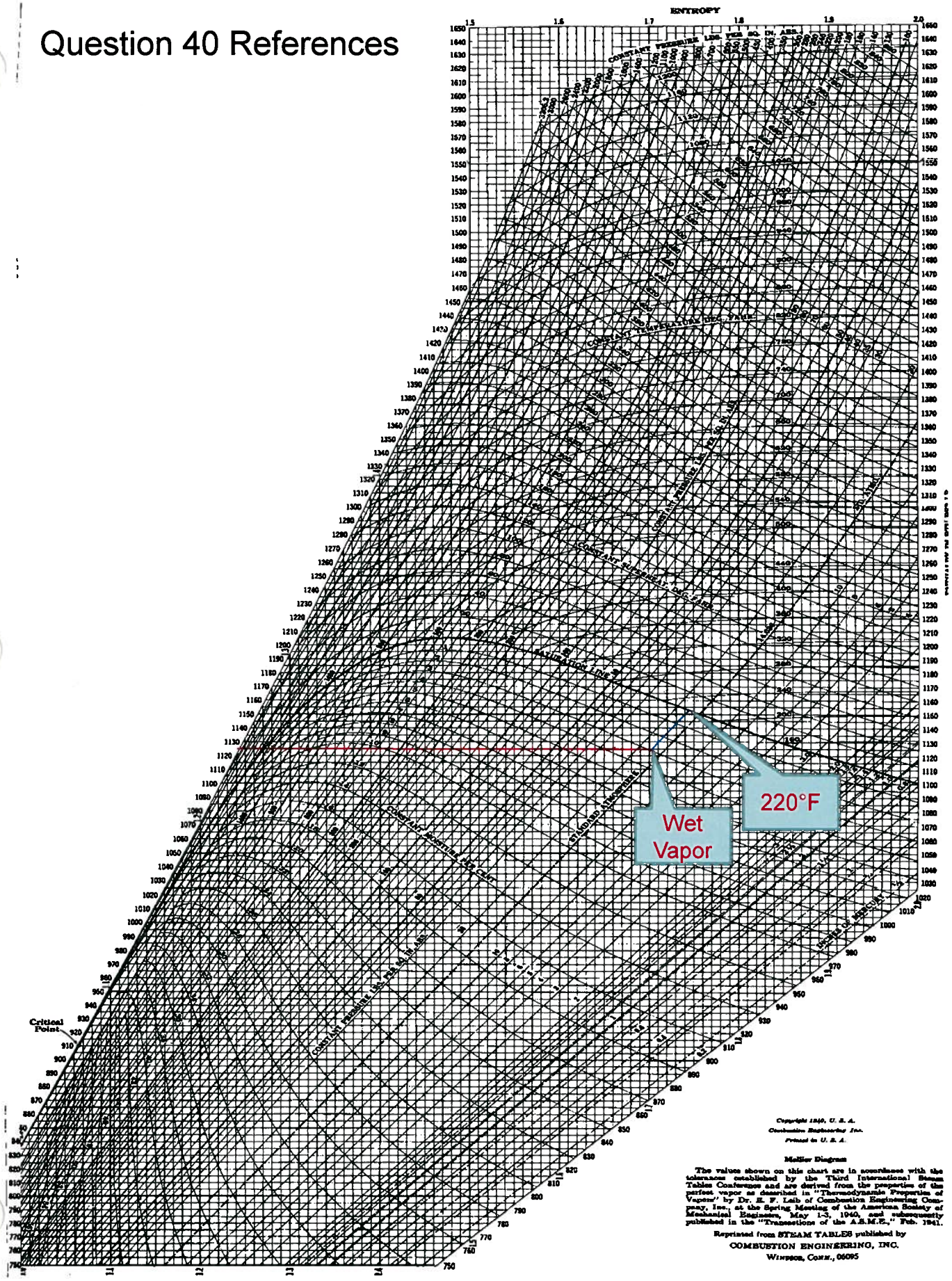

KA	KA_desc
APE008	Knowledge of the operational implications of the following concepts as they apply to a Pressurizer Vapor Space Accident: (CFR 41.8 / 41.10 / 45.3)□Thermodynamics and flow characteristics of open or leaking valves
AK1.01	.....

Unit 1 is in Mode 3 at full temperature and pressure. The crew has entered AP/1/A/5500/011 (Pressurizer Pressure Anomalies) due to Pressurizer pressure decreasing very slowly.

- Pressurizer pressure is 2150 PSIG
- PRT pressure is 2 PSIG

Given the above conditions, determine which ONE (1) of the following would indicate a leaking PORV and the state of the fluid in the PORV discharge?

REFERENCE PROVIDED

	PORV Discharge Temperature	State of the Effluent
A.	200-240°F	Wet Vapor
B.	200-240°F	Saturated Vapor
C.	240-280°F	Wet Vapor
D.	240-280°F	Saturated Vapor

General Discussion

Required Reference is steam table.
This question is associated with TMI. Per the TMI lesson plan:
It was clear from the operator's understanding of the PZR PORV discharge temperature and the indications of saturation/superheated fluid in the hot leg, that operator knowledge of thermodynamics needed to be drastically improved.
At 0520 the operators obtain a printout of PZR Safety and PORV discharge temperatures showing 232°F and 283°F respectively, but the operators still believe the PORV to be closed. For some time the PORV had been leaking prior to this day. The PORV leakage had been accepted as a normal part of operation (i.e. workaround). The temperature on the discharge of the PZR PORV had indicated what would be seen for PORV open or leaking since the PORV had started leaking. The operators believed the discharge temperature would increase to PZR temperature if the PORV actually opened.

A Pressurizer pressure of 2150 psig (2165 psia) corresponds to a Saturated Vapor Enthalpy of 1125 BTU/lbm. This Enthalpy undergoing a throttling process discharging to a PRT at a pressure of 2 psig (17 psia)

This KA is matched since the applicant must know how to use the Mollier diagram to determine the thermodynamic characteristics of the fluid entering the PRT.

This is an analysis level because the applicant must evaluate the given conditions using the Mollier diagram to determine the correct temperature and state of the fluid.

Answer A Discussion

CORRECT.

Answer B Discussion

Incorrect. Plausible as this temperature would be obtained if the student followed the entropy line from the PRT pressure to the saturation curve.

Answer C Discussion

Incorrect. Plausible if the applicant follows the entropy line from the PRT press to the saturation curve.

Answer D Discussion

Incorrect. Plausible as this temperature would be obtained if they follow the entropy line from the PRT press to the saturation curve.

Basis for meeting the KA

Basis for Hi Cog

Basis for SRO only

Job Level	Cognitive Level	QuestionType	Question Source
RO	Comprehension	BANK	2006 NRC Q2 (Bank 608)

Development References	Student References Provided
THFFLO07 OP-CN-II-TMI	Steam Tables

KA	KA_desc
APE008	Knowledge of the operational implications of the following concepts as they apply to a Pressurizer Vapor Space Accident: (CFR 41.8 / 41.10 / 45.3)□Thermodynamics and flow characteristics of open or leaking valves
AK1.01	.....

401-9 Comments:	Remarks/Status
APE008AK1.01 Double jeopardy with Q 9: This Q is not double jeopardy with Q 9 because 9 dealt with a ruptured PRT. This Q deals with the usage of the mollier diagram. I am researching the SRO ONLY aspect of this. RFA 10/28/09	Considered SAT for submittal with no comments. No changes.

EPE009 EK2.03 - Small Break LOCA
nowledge of the interrelations between the small break LOCA and the following: (CFR 41.7 / 45.7)
/Gs .....

Given the following conditions on Unit 1:

- The unit has experienced a Reactor Trip and Safety Injection due to a Small-Break LOCA
- The crew has just completed the actions of E-0 (Reactor Trip or Safety Injection)
- NV pump flow to the NC system Cold Legs is 390 GPM
- NC system pressure is 1300 PSIG and stable
- SG pressures are 1092 PSIG and stable
- NC system subcooling on the ICCM is 22°F and stable

Which ONE (1) of the following describes plant conditions upon transition to E-1 (Loss of Reactor or Secondary Coolant)?

	NC Pumps Running?	SGs Required for Heat Removal?
A.	YES	YES
B.	YES	NO
C.	NO	YES
D.	NO	NO

General Discussion

For this plant condition, even though NV pumps are running and injecting into the NC system, since NC subcooling is not less than 0°F, NC pumps should still be running (E-0 Foldout Page requirement).

Additionally, since NC system pressure is greater than SG pressures and both NC system and SG pressures are stable, the SGs are required for NC system cooling.

Answer A Discussion

CORRECT: See explanation above.

Answer B Discussion

INCORRECT: See explanation above.

PLAUSIBLE: Part 1 is correct.

Part 2 is plausible because the applicant may conclude that the SGs are not required for NC system heat removal since there is 390 GPM of flow to the cold legs from the NV pumps.

Answer C Discussion

INCORRECT: See explanation above.

PLAUSIBLE: Part 1 is plausible because the applicant might conclude that NC pumps should not be running since a Safety Injection has occurred and the NV pumps are injecting into the cold legs at 390 GPM. However, the NC pumps are only secured in accordance with E-0 Foldout Page criteria if the NV pumps are running and NC system subcooling has been lost.

Part 2 is plausible because the applicant may conclude that the SGs are not required for NC system heat removal since there is 390 GPM of flow to the cold legs from the NV pumps.

Answer D Discussion

INCORRECT: See explanation above.

PLAUSIBLE: Part 1 is plausible because the applicant might conclude that NC pumps should not be running since a Safety Injection has occurred and the NV pumps are injecting into the cold legs at 390 GPM. However, the NC pumps are only secured in accordance with E-0 Foldout Page criteria if the NV pumps are running and NC system subcooling has been lost.

Part 2 is correct.

Basis for meeting the KA

This K/A is met because the applicant must evaluate a given situation where a small break LOCA has occurred and determine that the SGs are still required for NC system heat removal.

Basis for Hi Cog

This is a hi cog question because it requires more than one mental step. First the applicant must analyze the given conditions and compare them to recalled memory (E-0 Foldout Criteria) to determine that the NC Pumps should still be running.

Additionally, the applicant must analyze the given conditions to determine that with NC system pressure stabilizing above the secondary safety valve set pressure, that break flow is not sufficient to remove all decay heat energy and that the SGs are required for NC system heat removal.

Basis for SRO only

Job Level	Cognitive Level	QuestionType	Question Source
RO	Comprehension	BANK	VCS Nuclear Station 2007 Audit Examination

Development References

WOG HPBG-E-1, Rev 2, Section 2.1, 3/8"<break<1", pages 7 & 8

-MC-EP-E1 Obj 7

Student References Provided

EPE009 EK2.03 - Small Break LOCA

Knowledge of the interrelations between the small break LOCA and the following: (CFR 41.7 / 45.7)

S/Gs .....

QUESTION 41 2541 A

401-9 Comments:

Remarks/Status

401-9 Comments:

Distractor D is NP because of the way it is written. One would not say NC pumps are not running. SGs are not required for NC system heat removal. Consider setting up A - D in a table format and ALL distractors will be plausible.

Resolution / Comments:

Not sure that I completely understood what we're looking for here. However, wrote a proposed replacement question with the answers in table format. See attached file for proposed revision.

Question 41 References:

OBJECTIVES

SEQ	OBJECTIVE	NLO	NLOR	LPRO	LPSO	LOR
1	Explain the purpose for each procedure in the E-1 series. EPE1001			X	X	
2	Discuss the entry and exit guidance for each procedure in the E-1 series. EPE1002			X	X	
3	Discuss the mitigating strategy (major actions) of each procedure in the E-1 series. EPE1003			X	X	X
4	Discuss the basis for any note, caution or step for each procedure in the E-1 series. EPE1004			X	X	X
5	Given the Foldout page discuss the actions included and the basis for these actions. EPE1005			X	X	X
6	Given the appropriate procedure, evaluate a given scenario describing accident events and plant conditions to determine any required action and its basis. EPE1006			X	X	X
7	Discuss the time critical task(s) associated with the E-1 series procedures including the time requirements and the basis for these requirements. EPE1007			X	X	X

From Lesson Plan OP-MC-EP-E1 Pg. 13 (Rev 23)

1.0 PROCEDURE SERIES BACKGROUND

1.1. E-1, Loss of Reactor or Secondary Coolant

2.1.1 Loss of Reactor Coolant

In order to describe the various phenomena that can occur during a LOCA, it is convenient to define five categories of accidents based on the size of the break and number of S/I trains. This section describes four break sizes and Safeguard equipment status as follows:

1. Breaks between 3/8" (≈0.1 in^2) and 1" (≈0.8 in^2) diameter with minimum safety injection. NC pressure will stabilize above steam generator pressure.
2. Breaks between 3/8" (≈0.1 in^2) and 1" (≈0.8 in^2) diameter with maximum safety injection. The NC will repressurize.
3. Breaks between 1" (≈0.8 in^2) and 13.5" (≈1 ft^2) diameter. NC pressure goes below steam generator pressure.
4. Breaks greater than 1 ft^2. The NC will rapidly depressurize to close to the containment atmospheric pressure.

Breaks smaller than 3/8" (≈0.1 in^2) with normal charging are considered to be leaks rather than small LOCAs since NC pressure and Pzr level do not go down. If charging flow is not available, the transient would be similar to the response described below for small LOCAs.

SMALL LOCAs

The flowpath through the E-1 series is dependent upon the break size, the break location, and operator/Station Management decisions. For a break size of up to 1 inch diameter, the amount of S/I flow determines the flow path in the E-1 series. If minimum S/I flow is assumed, the E-1 S/I-termination criteria would not be met, repressurization of the reactor coolant may not occur, and S/I flow equals the break flow. This constitutes a safe and stable condition for the long term provided the heat sink is maintained. As long as S/I and Auxiliary Feedwater are available, the reactor will reach equilibrium conditions for the steam generator pressures. Long-term cooling may require depressurizing to cold shutdown while stepping down S/I flow, so ES-1.2, Post LOCA Cooldown and Depressurization would be used.

If maximum S/I flow is assumed such that S/I flow is greater than break flow, the reactor will rapidly repressurize, and may in fact end up with the pressurizer filled solid. At this point, the NC system will rapidly repressurize and the S/I termination criteria will be met, and S/I may be terminated using ES-1.1, S/I Termination. However, if S/I is not terminated, or more realistically, if S/I termination is delayed, the core will remain cooled and in a safe and long term stable condition. The NC system will remain in an acceptable, although possibly not desirable, condition.

From WOG Background Doc HPBG E-1 Sect 2.1

Breaks ≤ 3/8" equivalent diameter hole

Breaks in this range are considered to be leaks, rather than small LOCAs, since the normal charging system can maintain reactor coolant inventory so that RCS pressure and pressurizer level do not decrease. Very slight system depressurization may occur but no automatic trip or safety injection signal would be generated. The core will remain fully covered provided that the steam generators are available to remove energy, and makeup flow is continuously delivered to the RCS. If charging flow is not available, the RCS transient behavior would be similar to the response described for Category 2.

If the leak is within Technical Specification limits or it can be isolated, the plant could remain in power operation. If the leak is above Technical Specification limits and cannot be isolated, then the plant should go to a cold shutdown condition utilizing the normal shutdown procedures. During cooldown the charging system should maintain pressurizer level and the RCS depressurization should be controlled to conform to the normal cooldown limits.

Breaks 3/8" < diameter <~ 1", minimum safety injection, or Category 1 breaks above with no charging flow assumed

For these break sizes the normal makeup system cannot maintain level and pressure. The RCS will depressurize and an automatic reactor trip and safety injection signal will be generated. Provided that a secondary side heat sink exists, the RCS will reach an equilibrium pressure which corresponds to the pressure at which the liquid phase break flow equals the high pressure pumped safety injection flow. It has been verified that this equilibrium pressure condition will be established for plants with charging/SI pumps. This effect is described here by the presentation of a specific plant analysis for break sizes within this range. A general description of system behavior applicable to the sample transient is provided first, then specific comments concerning the sample analysis are provided.

Early in the transient a loss of subcooled liquid in the RCS occurs which results in a moderate depressurization to the pressure which corresponds to saturation pressure in the core and hot legs. At this point the upper head, upper plenum, hot legs, and core begin to experience some slight voiding, but more than enough liquid flow exists through the core to keep it covered and cooled. During this period of voiding, however, RCS depressurization occurs at a much slower rate than during the time when the entire system was subcooled. Eventually the RCS depressurizes to the point of the reactor trip signal. Immediately following reactor trip, the RCS rapidly depressurizes, since only a fraction of the heat previous to trip is now being transferred to the primary fluid. Due to this rapid depressurization following reactor trip, a safety injection signal is quickly generated. Within a few minutes of the reactor trip time, an equilibrium pressure is established which is above the steam generator pressure. The fluid conditions in the RCS at the time of equilibrium pressure establishment may be characterized by slight voiding in the core and upper plenum and hot legs, and saturated or slightly subcooled liquid in the cold legs. Core heat is removed through the steam generators by continuous single or two-phase natural circulation.

The primary mixture level in the steam generators does not drain for breaks of this size, and the core remains covered throughout the entire transient provided that SI is not interrupted. Once equilibrium pressure is established there is no further net loss of liquid volume in the RCS. The natural circulation heat removal mode continues until the time that the break can remove all the decay heat (1 day for a 1" break). Prior to this time, auxiliary feedwater is required to maintain the heat sink. Since the equilibrium pressure established is determined by means of a volume balance of SI flow and break flow, the ΔP and ΔT from primary to secondary side, together with the cold safety injection water, may provide a total heat sink greater than the decay heat generated and a cooling of the primary fluid can occur.

Question 41 Parent Question (VCSNS 2007 Audit Examination):

15. 009 EK2.03 1

Given the following plant conditions:

- A reactor trip has occurred.
- Safety Injection is actuated.
- All actions required in EOP-1.0, *Reactor Trip/Safety Injection Actuation,* have been taken.
- RCS pressure is 1300 psig and stable.
- SG pressures are 1050 psig and stable.

Which ONE (1) of the following describes the plant condition upon transition from EOP-1.0?

A. RCPs are running. SGs are required for RCS heat removal.

B. RCPs are running. SGs are NOT required for RCS heat removal.

C. RCPs are NOT running. SGs are required for RCS heat removal.

D. RCPs are NOT running. SGs are NOT required for RCS heat removal.

A is incorrect. With RCS pressure higher than SG pressure, a secondary heat sink is required. RCPs will be off due to RCS pressure
B is incorrect. SGs are available and required to remove heat from the RCS
C is correct. A SBLOCA is in progress as indicated by RCS pressure being above RHR Pump shutoff head. SGs would not be required for heat removal if LBLOCA in progress. RCPs are off
D is incorrect. SGs are required
Knowledge of the interrelations between the small break LOCA and the following: S/Gs.

Question Number: RO 41

Tier 1 Group 1

Importance Rating: 3.0

Answer Explanation:

Technical Reference:
Proposed references to be provided to applicants during examination:

Learning Objective:
Question Source:
Question History:
Question Cognitive Level:
10 CFR Part 55 Content:

Comments:

Answer: C

2010 MNS SRO NRC Examination QUESTION 42

2542

A

APE015/017 2.1.32 - Reactor Coolant Pump (RCP) Malfunctions
PE015/017 GENERIC
bility to explain and apply system limits and precautions. (CFR: 41.10 / 43.2 / 45.12)

Unit 1 was operating at 100% RTP. Given the following trends on the 1A NCP:

Time	0200	0205	0210	0215
Pump #1 Seal D/P (PSID)	215	210	205	195
Lower pump bearing temp (°F)	221	225	228	231
#1 seal outlet temp (°F)	205	227	235	251
Motor winding temp (°F)	312	314	316	323

What is the LATEST time at which the 1A NCP must be secured?

A. 0200

B. 0205

C. 0210

D. 0215

General Discussion

NCP Trip criteria:
Any motor bearing temperature > 195°F
Seal Outlet temperature > 235°F
Motor winding temperature > 311°F
(Any bearing water exit temperature > 225°F)

Answer A Discussion

CORRECT: See explanation above.

Answer B Discussion

INCORRECT: See explanation above.

PLAUSIBLE: This answer is plausible if the applicant does not recall the NCP operating limits from the Limits and Precautions.

Answer C Discussion

INCORRECT: See explanation above.

PLAUSIBLE: This answer is plausible if the applicant does not recall the NCP operating limits from the Limits and Precautions.

Answer D Discussion

INCORRECT: See explanation above.

PLAUSIBLE: This answer is plausible if the applicant does not recall the NCP operating limits from the Limits and Precautions.

Basis for meeting the KA

The K/A IS matched because a malfunction of the 1A NCP has occurred and the applicant must determine based on comparing the given data to the Limits and Precautions for the NCPs when the pump must be stopped.

Basis for Hi Cog

This is a higher cognitive level question because it requires more than one mental step. The applicant must first recall from memory the NCP operating limits from the limits and precautions. The applicant must then analyze the given data to determine when the NCP operating limits are needed.

Basis for SRO only

Job Level	Cognitive Level	QuestionType	Question Source
RO	Comprehension	BANK	2003 CNS NRC Q45

Development References

Lesson Plan OP-MC-PS-NCP
Lesson Plan Objective 15

Student References Provided

APE015/017 2.1.32 - Reactor Coolant Pump (RCP) Malfunctions
APE015/017 GENERIC
Ability to explain and apply system limits and precautions. (CFR: 41.10 / 43.2 / 45.12)

401-9 Comments:

Remarks/Status

Proposed replacement question for 2010 NRC Q42.

Approved replacement question. RFA 07/07/10

Question 42 References:

From Lesson Plan OP-MC-PS-NCP Section 3.1.1:

WHEN reactor power greater than 25%, starting an NC Pump is prohibited.

BASIS: The concern here is a power excursion which could result in a reactor trip and possible core damage. The idle loop temperature is at Tc for the system and the higher the reactor power the larger the core ΔT.

Objective #15

NC Pump trip criteria are:

- Any motor bearing temperature exceeds 195°F.
- Any motor winding temperature exceeds 311°F.
- The lower pump bearing temperature exceeds 225°F.
- The motor frame vibration exceeds 5 mils.
- The pump shaft vibration exceeds 20 mils.
- The motor shaft vibration exceeds 20 mils.
- The flywheel vibration exceeds 20 mils.
- The flywheel axial vibration exceeds 20 mils.
- High or Low oil level alarm with an adverse trend in either the upper or lower motor oil reservoirs.
- No. 1 seal outlet temperature exceeds 235°F.
- ICCM indicates NC System is nearing saturation conditions (loss of subcooling).
- The No. 1 Seal ΔP is less than 200 PSI.

BASIS: Stopping a pump when any of these parameters is exceeded should reduce the possibility of any further degradation of the pump or motor.

AP/1/A/5500/008 (Reactor Coolant Pump Malfunctions) provides guidance for No. 1 seal leakoff concerns.

BASIS: The AP provides the operator with guidance for responding to NCP malfunctions.

Starting an NC Pump supplied from the same Auxiliary Transformer through which a D/G is paralleled to the system may result in tripping the D/G breaker. The D/G should be shutdown or the NC Pump transferred to the alternate Auxiliary Transformer before starting.

APE015/017 AK2.10 - Reactor Coolant Pump (RCP) Malfunctions
Knowledge of the interrelations between the Reactor Coolant Pump Malfunctions (Loss of RC Flow) and the following: (CFR 41.7 / 45.7)
RCP indicators and controls .....

Unit 1 was operating at 100% power. Given the following trends on the 1A NCP:

Time	0200	0205	0210	0215
Motor bearing temp (°F)	180	184	186	195
Lower pump bearing temp (°F)	221	225	228	231
#1 seal outlet temp (°F)	205	227	235	251
Motor winding temp (°F)	312	314	316	323

What is the earliest time at which the 1A NCP must be secured?

A. 0200

B. 0205

C. 0210

D. 0215

General Discussion

Bank Question: 870
NCP Trip criteria:
Any motor bearing temperature > 195°F
Seal Outlet temperature > 235°F
Motor winding temperature > 311°F
(Any bearing water exit temperature > 225°F)

Answer A Discussion

Correct: NCP must be stopped if motor winding temperature reaches 311 degrees at 0200

Answer B Discussion

Incorrect: NCP must be stopped at 0200
Plausible: reaches the temperature for securing NCP on lower bearing.

Answer C Discussion

Incorrect: NCP must be stopped at 0200
Plausible: reach the limit for securing NCP on seal outlet temp at 0210

Answer D Discussion

Incorrect: NCP must be stopped at 0200
Plausible: reach the temperature for stopping NCP on motor bearing at 0215

Basis for meeting the KA

Basis for Hi Cog

Basis for SRO only

Job Level	Cognitive Level	QuestionType	Question Source
RO	Memory	BANK	

Development References

Lesson Plan Objective: NCP Obj: 12
References:
1. OP-CN-PS-NCP pages 7, 10, 14, 15

Student References Provided

APE015/017 AK2.10 - Reactor Coolant Pump (RCP) Malfunctions
Knowledge of the interrelations between the Reactor Coolant Pump Malfunctions (Loss of RC Flow) and the following: (CFR 41.7 / 45.7)
RCP indicators and controls .....

401-9 Comments:

Remarks/Status

APE022 AA1.09 - Loss of Reactor Coolant Makeup

bility to operate and / or monitor the following as they apply to the Loss of Reactor Coolant Makeup: (CFR 41.7 / 45.5 / 45.6)

CP seal flows, temperatures, pressures, and vibrations . . . . . .

A loss of all charging and seal injection flow on Unit 1 has resulted in a failure of the 1B NCP #2 Seal.

The 1B NCP #1 Seal Leak-off flow is going __(1)__.

1B NCP #2 Seal Standpipe __(2)__ level alarm is LIT.

Which ONE (1) of the following completes the statements above?

A. 1. DOWN
   2. LOW

B. 1. DOWN
   2. HIGH

C. 1. UP
   2. HIGH

D. 1. UP
   2. LOW

General Discussion

From the Background Document for AP-08 (Malfunction of NC Pump): "If the #2 seal failure is the initial failure on the NC Pump, it would cause a high standpipe level and low flow on #1 seal leakoff."

Answer A Discussion

INCORRECT: See explanation above.

PLAUSIBLE: This answer is plausible if the applicant does not understand the flow path through the NC pump seals and the effect of various seal malfunctions on indicated seal flows and standpipe level.

Answer B Discussion

CORRECT: See explanation above.

Answer C Discussion

INCORRECT: See explanation above.

PLAUSIBLE: This answer is plausible if the applicant does not understand the flow path through the NC pump seals and the effect of various seal malfunctions on indicated seal flows and standpipe level.

Answer D Discussion

INCORRECT: See explanation above.

PLAUSIBLE: This answer is plausible if the applicant does not understand the flow path through the NC pump seals and the effect of various seal malfunctions on indicated seal flows and standpipe level.

Basis for meeting the KA

The KA is matched because Reactor Coolant Makeup is lost and subsequently restored resulting in a malfunction of the 1B NCP #2 seal. The applicant demonstrates the ability to monitor RCP seal flows by demonstrating a knowledge of what indications would confirm a failure of the #2 Seal.

Basis for Hi Cog

This is a higher cognitive level question because it requires multiple mental steps. The applicant recall from memory the flowpath though the #1 and #2 Seals and determine the impact of a number #2 Seal failing opening on the seal flow indications.

Basis for SRO only

Job Level	Cognitive Level	QuestionType	Question Source
RO	Comprehension	BANK	MNS Exam Bank Question #PSNCPN04

Development References

Learning Objectives:
1) PS-NCP #12

References:
1) Lesson Plan OP-MC-PS-NCP Section 2.3.2
2) AP-08 Background Document

Student References Provided

APE022 AA1.09 - Loss of Reactor Coolant Makeup

Ability to operate and / or monitor the following as they apply to the Loss of Reactor Coolant Makeup: (CFR 41.7 / 45.5 / 45.6)

RCP seal flows, temperatures, pressures, and vibrations . . . . . .

401-9 Comments:

Remarks/Status

401-9 Comments:

The answer choices are very difficult to read. Consider setting this Q up as a fill in the blank as follows:
The #1 Seal Leak off Flow is going _____.
NC Pump number 2 Seal Standpipe _____ level alarm is LIT

A. Down
Low

QUESTION 43 2543 B

B. Down
High
C. Up
High
D. Up
Low

Resolution / Comments:

Revised question per Lead Examiner's recommendation. See attached file for revised question.

Question 43 References:

From Lesson Plan OP-MC-PS-NCP Section 2.3.2:

Objective #11, 12

Each of the NC Pump No. 1 seal leakoff lines have seal return isolation valves. These valves are closed when NC System pressure is less than 100 psig in order to prevent any backflow from the NV System through the seal return filter to the NC Pump seals. Backflow would flush any contaminants/particulates out of the filter and into the seal.

These isolation valves are also used in the event of a failure (excessive leakage) of the No. 1 seal. When No. 1 seal leakoff flow is high, some of this flow comes from the NC System up through the thermal barrier. There may be insufficient heat removal by the thermal barrier heat exchanger to adequately cool the leakoff flow. This hotter water could cause damage to the No. 2 and 3 seals. When the seal return valve is closed, the No. 2 seal becomes the primary seal and maintains the large ΔP. The No. 2 seal is designed to withstand this high ΔP for a short period and the pump must be stopped within 5 minutes (per ESBU-TB-93-01-R1) and the plant must be cooled down and depressurized so that repairs can be made.

The NC Pumps are equipped with a common No. 1 seal bypass valve. This valve is only opened at low system pressures (100-1000 psig) when there is insufficient flow to adequately cool the seal (leakoff temperature >200°F).

The leakoff from each pump is piped to a common manifold and then via a seal water filter through a seal water heat exchanger where the temperature is reduced to about that of the VCT. Leakage past the No. 1 seal provides a constant pressure on the No. 2 seal and constant pressure on the No. 3 seal. A standpipe is provided to assure a backpressure of at least 7 feet of water on the No. 3 seal. In addition, the standpipe is used to warn of excessive No. 2 seal leakage flow to the reactor coolant drain tank (NCDT). Excessive No. 2 seal leakage results in a rise in the standpipe level and eventual overflow to the NCDT via a second overflow connection.

A total of 8 gpm is supplied to each NC pump for seal injection water. 5 gpm is directed down through the thermal barrier labyrinth seal and into the NC System. 3 gpm flows up through the lower radial bearing.

A minimum differential pressure of 200 psid is required at low NC System pressure (see 7.6) across the No. 1 seal surfaces to ensure proper water film during pump operation. For an NCP start at normal system pressure, there must be approximately 1 gpm seal leakoff flow for 2200 psid. The inlet pressure is approximately 2250 psig (NC System pressure) and the outlet pressure is 15-50 psig (VCT pressure) during normal operation. Approximately 3 gpm leaks off from the No. 1 seal of which 3 gph flows to the No. 2 seal. Proper VCT pressure is required to ensure adequate backpressure for proper flow through the No. 2 seal.

Objective #12

Approximately 3 gph is directed through the No. 2 seal. The pressure drops from 50 psig to 3 psig across this seal. All the No. 2 seal leakoff, except for 100 cc/hr, is directed to a standpipe. The water level in the standpipe is maintained to provide

sufficient backpressure on the No. 2 seal to ensure flow through the No. 3 seal. All excess water from the standpipe is discharged to the NCDT through an orifice. Improper standpipe level can adversely affect seal operation, therefore there is a high

and low level alarm provided for the standpipe to warn of potential seal problems. A high level alarm could indicate excessive No. 2 seal leak-off flow.

Approximately 100 cc/hr from the No. 2 seal is directed to the No. 3 seal. The pressure drops from 3 psig to atmospheric across this seal. After passing through the seal the leakoff is directed to the NCDT.

The minimum and maximum flow rates and temperatures for seal injection water are 6 gpm and 50° F and 12 gpm and 150° F, respectively.

Objective #9

No.1 seal temperature, injection flow, and ΔP indications are provided on the Main Control Board. Recorders are provided for No. 1 seal leakoff flow indicating low range (0-2 gpm) and high range (0-6 gpm) flow. Other indications are provided on the OAC.

2.4 NC Pump Monitor System

Objective #15

The purpose of the EME system is to monitor the voltage and frequency of the 6900V power source for the reactor coolant pump motors. Following a drop in either parameter below its setpoint, the monitoring system will provide a signal to the Solid State Protection System (SSPS) to indicate the condition.

Due to the direct impact of the EME system on the performance of the Reactor Protection System (through the SSPS reactor trip circuit), it is classified as nuclear safety related. By definition, the Reactor Protection System is designed to shut down the reactor to protect against fuel cladding damage or loss of system integrity, which may result in the release of radioactive fission products into Containment.

The under-voltage and under-frequency monitors are voltage and frequency sensing devices, respectively. Frequency is monitored between the supply breaker and the safety breaker while voltage is monitored between the safety breaker and the motor (see drawing 7.16). Each monitor's output sends a signal to its corresponding auxiliary relay which in turn sends a signal to the SSPS to indicate the condition. If 2 out of the 4 channels monitored indicate an under-voltage (or under-frequency) condition, the SSPS will initiate a reactor trip (1/4 causes an NC Pump Bus Alert alarm in the Control Room). The underfrequency and undervoltage setpoints are listed in Technical Specifications table 3.3.1-1.

For an under-frequency condition, the reactor coolant pump circuit breakers will be tripped as well. Note that at a power level less than the P-7 interlock the SSPS Reactor Trip Function on under-voltage and/or under-frequency will be blocked. However, the P-7 interlock will **NOT** block the trip of the Reactor Coolant Pump Safety Breakers. If an under-frequency condition exists on 2 or more pumps, the Reactor Coolant Pump Safety breakers will be tripped, regardless of the power level.

From AP-08 Background Document:

DISCUSSION:

An observed NC Pump seal phenomenon following seal repair or replacement is that a short period of operation (up to 24 hours) may be required to get the seals to seat properly. This can result in abnormal seal leak-off. For example, if the #1 seal is not seated properly, it can cause the #1 seal leak-off to be high. If the #2 seal is not seated properly, it can cause the #1 seal leak-off to be low (with #2 seal standpipe high level alarm).

This note is for consideration only. The following steps are not affected by this information. If leak-off is not within the normal range (1.0 gpm – 5.0 gpm), but within the pump operating limits, direction is given to contact station management for further guidance and continue to monitor NC Pump seal leak-off flow. Continued NC Pump operation is allowed within the operating limits (0.8 gpm – 6.0 gpm). The information in this note would be taken under consideration by station management.

REFERENCES:

MCM 1201.01-0193 001, NCP Instruction Manual, Section 6.5 – Troubleshooting

CASE I STEP 17:

PURPOSE:

Diagnose a #2 seal failure during scenarios where #1 seal has not failed.

DISCUSSION:

This point in the AP is reached with NC Pumps running. Possibly the only failure is the #2 seal. Typically, as the #2 seal fails, it's leak-off increases. Two effects of it's leak-off increasing are #1 seal leak-off decreasing and standpipe level increasing. This step checks for these symptoms and if true, #2 seal failure is assumed. Direction is given to continue to monitor pump parameters, notify Engineering to determine #2 seal leakoff flow, and evaluate continued NCP operation. Revision 1 to Westinghouse Product Update S-013 provides an operational limit of 1.1 gpm for #2 seal leakoff flow. Reference PIP M-08-5384. The Engineering notification was discussed with Steve Rosenau, NCP component Engineer.

REFERENCES:
PIP M-08-5384
Westinghouse Product Update S-013 Rev. 1

Question 43 Parent Question:

Question 72 PSNCPN04 PSNCPN04

1 Pt

Unit 1 is at 100% power when indications are received of a "1B" Reactor Coolant Pump seal malfunction. AP/1/A/5500/008 (*Malfunction of NC Pump*) is implemented.

Which one of the following conditions describes a number two seal failure?

A.
- #1 Seal Leak off flow - GOING DOWN
- NC Pump number 2 Seal Standpipe low level alarm - LIT
- NCDT input - STABLE, OR GOING DOWN

B.
- #1 Seal Leak off flow - GOING DOWN
- NC Pump number 2 Seal Standpipe high level alarm - LIT
- NCDT input - GOING UP

C.
- #1 Seal Leak off flow - GOING UP
- NC Pump number 2 Seal Standpipe high level alarm - LIT
- NCDT input - STABLE, OR GOING DOWN

D.
- #1 Seal Leak off flow - GOING UP
- NC Pump number 2 Seal Standpipe low level alarm - LIT
- NCDT input - GOING UP

Answer 72

B

Distracter analysis:

A. Incorrect:
Plausible: # 1 Seal L/O WILL go down

C. Correct

C. Incorrect:
Plausible: High Standpipe level alarm WILL light

D. Incorrect:
Plausible: NCDT input WILL go up

Level: RO & SRO
KA: SYS 003 (3.1 / 3.0)
Lesson plan objective: OP-MC-PS-NCP, Obj 12
Source: New
Level of knowledge: Comprehension
Reference:
1. OP-MC-PS-NCP, pgs 25-29
2. AP/1/A/5500/008, Malfunction of NC pump

APE025 AA1.12 - Loss of Residual Heat Removal System (RHRS)

bility to operate and / or monitor the following as they apply to the Loss of Residual Heat Removal System: (CFR 41.7 / 45.5 / 45.6)

RCS temperature indicators .....

Given the following conditions on Unit 1:

- Unit is in Mode 5
- Both Trains of ND are initially in service
- NC system temperature is being maintained at 140°F
- Subsequently, both ND pumps trip
- The crew has implemented AP-19 (LOSS OF ND OR ND SYSTEM LEAKAGE)
- Efforts to restore an ND pump to service have been unsuccessful

If a MAXIMUM NC system temperature of __(1)__ is exceeded, AP-19 will direct the crew to stop attempts to restore an ND pump and __(2)__ to restore cooling to the NC system.

Which ONE (1) of the following completes the statement above?

A. 1. 180°F
   2. initiate NC system feed and bleed

B. 1. 180°F
   2. attempt to start an NC pump

C. 1. 212°F
   2. initiate NC system feed and bleed

D. 1. 212°F
   2. attempt to start an NC pump

General Discussion

IAW AP-19 Step 19.d. if NC system temperature exceeds 180°F then NC system feed and bleed is initiated.

Answer A Discussion

CORRECT: See explanation above.

Answer B Discussion

INCORRECT: See explanation above.

PLAUSIBLE: Part 1 is correct.

Part 2 is plausible because this is an option in AP-19 if there is still a bubble in the Pressurizer.

Answer C Discussion

INCORRECT: See explanation above.

PLAUSIBLE: Part 1 is plausible because throughout AP-19 the term "saturated conditions" is reference frequently. 212 deg is normally associated with water being saturated.

Part 2 is correct.

Answer D Discussion

INCORRECT: See explanation above.

PLAUSIBLE: Part 1 is plausible because throughout AP-19 the term "saturated conditions" is reference frequently. 212 deg is normally associated with water being saturated.

Part 2 is plausible because this is an option in AP-19 if there is still a bubble in the Pressurizer.

Basis for meeting the KA

The KA is matched because the applicant demonstrates an ability to monitor NC system temperature during a loss of RHR by demonstrating a knowledge of the temperature at which compensatory actions must be taken in AP-19.

Basis for Hi Cog

Basis for SRO only

Job Level	Cognitive Level	QuestionType	Question Source
RO	Memory	NEW	

Development References

Learning Objective:
1) AP-19 #3

References:
1) AP-19 Loss of ND or ND System Leakage

Student References Provided

APE025 AA1.12 - Loss of Residual Heat Removal System (RHRS)
Ability to operate and / or monitor the following as they apply to the Loss of Residual Heat Removal System: (CFR 41.7 / 45.5 / 45.6)
RCS temperature indicators .....

401-9 Comments:

Remarks/Status

401-9 Comments:

No comment.

Resolution / Comments:

Question 44 References:

From AP-19:

MNS AP/2/A/5500/19 UNIT 2	LOSS OF ND OR ND SYSTEM LEAKAGE	PAGE NO. 18 of 217 Rev. 20

ACTION/EXPECTED RESPONSE	RESPONSE NOT OBTAINED
19. **Determine time to reach saturation as follows:**	
__ a. Check core exit T/Cs - AVAILABLE.	a. Perform the following: __ 1) Estimate time to reach saturation using "THERMAL MARGIN" (on 2MC-6). __ 2) **GO TO** Step 19.c.
__ b. Monitor temperature heat up and estimate time to reach saturation.	
__ c. Check any NV pump or NI pump - FUNCTIONAL.	c. Perform the following: __ 1) **IF** 2FW-27A (FWST Supply To ND) is energized, **THEN GO TO** Step 19.d. 2) **IF AT ANY TIME** either of the following conditions is met, **THEN** initiate feed and bleed **PER** Steps 20 and 21: __ • NC temperature greater than 180°F. OR __ • Core within 20 minutes of reaching saturation. __ 3) **GO TO** Step 22.
d. Check NC temperature - __ • GREATER THAN 180°F. OR __ • CORE LESS THAN 10 MINUTES OF REACHING SATURATION.	d. Perform the following: __ 1) **IF AT ANY TIME** the temperature or time conditions are met, **THEN** initiate feed and bleed **PER** Steps 20 and 21. __ 2) **GO TO** Step 22.

ACTION/EXPECTED RESPONSE	RESPONSE NOT OBTAINED

20. **Prior to establishing feed and bleed in next step, perform the following:**

__ • Ensure any personnel inside NC piping (including S/Gs) are outside piping.

__ • **IF** time allows, prior to NC System boiling, **THEN** ensure all personnel are evacuated from lower containment.

__ • **IF** time allows, **THEN** refer to Data Book curve 2.10.4 (Core Flow Required to Prevent Boiling for Loss of Decay Heat Removal) to estimate minimum feed flow required to stabilize NC temperature.

• Announce the following on plant page:

__ a. "Initiating Unit 2 NC System Feed and Bleed."

__ b. "All personnel evacuate Unit 2 containment."

CAUTION

• **While boiling exists, RVLIS is the preferred NC level indication if available. Flow through the Pzr surge line may cause other NC level indications to be erroneously high. Boiling may make ultrasonic level indication unreliable. The following formula converts "%UR RVLIS" to "WR level":**

• WR level (inches above centerline) = (%UR RVLIS - 66) x 4.94

• **If NC System Sightglass in service, then WR and NR NC System Level indication will become invalid at 146" due to spillover into reference legs.**

21. **Establish NC feed and bleed as follows:**

__ a. Check power to all Pzr PORV isolation valves - AVAILABLE.

__ a. Evaluate cause of power loss and initiate actions to restore power to affected isolation valve(s).

__ b. OPEN all PZR PORV isolation valves.

__ c. OPEN all PZR PORVs.

B

2010 MNS SRO NRC Examination QUESTION 45

2545

APE027 AK2.03 - Pressurizer Pressure Control System (PZR PCS) Malfunction
nowledge of the interrelations between the Pressurizer Pressure Control Malfunctions and the following: (CFR 41.7 / 45.7)
ontrollers and positioners .....

Based on the current Pressurizer Pressure Channel indications below:

Pressurizer Pressure Channels

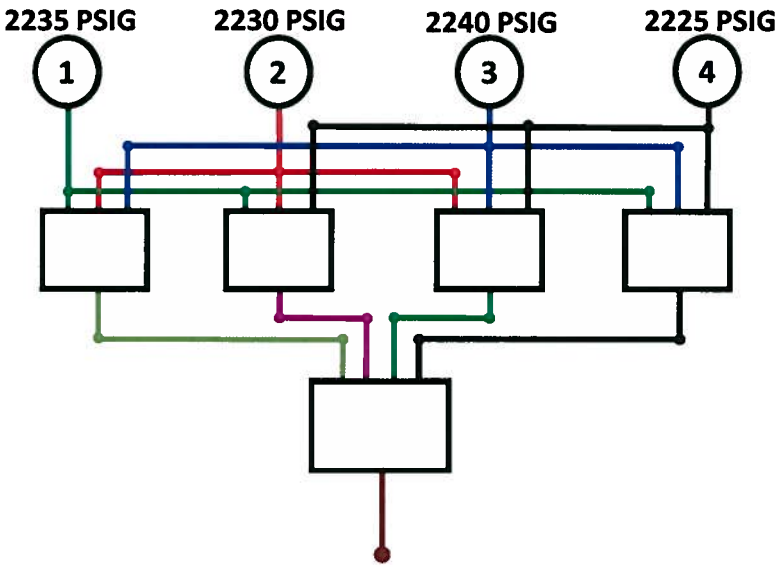

Which ONE (1) of the following lists the Selected pressure output to the Pressurizer Pressure Master Controller:

1. Based on the pressure indications shown above?

2. If Pressurizer Pressure Channel 3 fails low?

A. 1. 2240 PSIG
   2. 2230 PSIG

B. 1. 2235 PSIG
   2. 2232.5 PSIG

C. 1. 2240 PSIG
   2. 2232.5 PSIG

D. 1. 2235 PSIG
   2. 2230 PSIG

General Discussion

The Pressure Control Signals are developed using a Median Select Second Highest Algorithm receiving input from the available pressurizer pressure channels. Each of the 4 median select logics will provide the median (middle) of the three pressure channel inputs as it's output to the high channel select. The high select will then select the highest of the median select channel outputs as the "selected" channel. Provided there are no problems with the pressure input channels, the selected pressure channel for control will always be the second highest reading channel.

With the conditions given in this question Channel 1 is initially the second highest reading channel. So the selected pressure is 2235 PSIG.

When Pressure Channel 3 fails low, the 3 Median select channels with input from Channel 3 will now average the remaining two inputs to provide an output to the High Median Select. Therefore the Medial Select outputs will be as follows:

1 - 2232.5 PSIG
2 - 2230 PSIG
3 - 2227.5 PSIG
4 - 2230 PSIG

The highest Median Select Channel is now Channel 1 so the output the Pressurizer Pressure Master Controller will be 2232.5 PSIG.

Answer A Discussion

INCORRECT: See explanation above.

PLAUSIBLE: Part 1 is plausible if the applicant concludes that the algorithm selects the highest reading channel instead of the highest reading MEDIAN channel.

Part 2 is plausible if the applicant concludes that the algorithm choses the MEDIAN channel after the failure instead of the HIGHEST MEDIAN channel.

Answer B Discussion

CORRECT: See explanation above.

Answer C Discussion

INCORRECT: See explanation above.

PLAUSIBLE: Part 1 is plausible if the applicant concludes that the algorithm selects the highest reading channel instead of the highest reading MEDIAN channel.

Part 2 is correct.

Answer D Discussion

INCORRECT: See explanation above.

PLAUSIBLE: Part 1 is correct.

Part 2 is plausible if the applicant concludes that the algorithm choses the MEDIAN channel after the failure instead of the HIGHEST MEDIAN channel.

Basis for meeting the KA

The KA is matched because the applicant must determine the effect of a pressurizer pressure channel failure on the output of the median select circuit to the Pressurizer Pressure Master Controller.

Basis for Hi Cog

This is a higher cognitive level question because it requires more than one mental step to arrive at the correct answer. The applicant must first recall from memory that the channel select circuit is a Median Select 2nd Highest Algorithm. Then the applicant must compare the channel indications to determine which of the indications is the second highest indication. After the channel failure (in this case the highest reading channel) the applicant must compare the remaining channels and calculate the average of the remaining two pressure channels (for the median select channels which have input from the failed channel) to determine the second highest channel.

Basis for SRO only

Job Level	Cognitive Level	QuestionType	Question Source
RO	Comprehension	NEW	

Development References

Learning Objectives:
1) PS-IPE #3

References:
1) Lesson Plan OP-MC-PS-IPE Section 2.2

Student References Provided

APE027 AK2.03 - Pressurizer Pressure Control System (PZR PCS) Malfunction
Knowledge of the interrelations between the Pressurizer Pressure Control Malfunctions and the following: (CFR 41.7 / 45.7)
Controllers and positioners .....

401-9 Comments:

Remarks/Status

401-9 Comments:

Why would the applicant select 2230 psig based on this logic? I don't believe A1 and C1 are plausible. Facility please explain. This Q is U until facility explains why A1 and C1 are plausible.

Resolution / Comments:

There are better choices for plausibility. Decided to change 2230 PSIG to 2240 PSIG and 2227.5 PSIG to 2230 PSIG. Since the algorithm picks the highest median select signal it would be plausible for the applicant to pick the highest reading channel as the output to the Master Controller. See attached file for proposed revision. Need to work on distracter analysis.

Question 45 References:

From Lesson Plan OP-MC-PS-IPE Section 2.2:

2.0 COMPONENT DESCRIPTION

2.1 Pressurizer Pressure Channels

Objective #3

The pressurizer pressure transmitters are also called narrow range pressure transmitters as they span a range of pressure from 1700 to 2500 psig. This range encompasses all the setpoints for control and protective actions that need be taken for power operating conditions. The pressure transmitters (channels 1 through 4) tap off the wet reference legs of the pressurizer level transmitters channels 1 through 3. ((See drawing 7.3 Pressurizer Pressure and Level Indication (11/26/08) for specifics.)) Each channel is displayed on the MCB, with CH 1 also displayed on the Auxiliary Shutdown Panel (ASP). Most control and alarm functions are normally provided from Selected Pressurizer Pressure 1 or Selected Pressurizer Pressure 2. The pressurizer pressure control signals are developed using a Median Select Second Highest algorithm. The Selected pressurizer pressure signal is displayed on the pressurizer pressure recorder.

2.2 Pressurizer Pressure Control Signals

Objective #3

Refer to Drawing 7.3, Composite Pressurizer Pressure Control. The Pressure Control Signals are developed using a Median Select Second Highest Algorithms receiving input from the available pressurizer pressure channels. Selected Pressurizer Pressure 1, inputs to the Pressurizer Master Controller (heaters, sprays, Low/Hi Press Dev. Annunciators, & PORV NC-34A), the MCB Recorder, and the Low Pressure Interlock for PORV's NC-32B and NC-36B(2185 psig). Selected Pressurizer Pressure 2, inputs the pressure signal to PORV's NC 32B and NC-36B (lift setpoint) 2335 psig, the High pressure alarm (setpoint 2310 psig) and the Low Pressure Interlock for NC-34A (setpoint 2185 psig).

2.3 Pressurizer Pressure Master Controller

The Pressurizer Pressure Master Controller (Soft Panel Only) compares actual pressure (Median Select 2nd Highest) with a reference pressure. The reference pressure is entered on the graphic soft controller. Refer to Drawing 7.13, PZR Pressure Control DCS Graphic. Using the PZR PRESS MASTER Pop-up on the PZR Pressure Control Graphic, the operator will depress the "A" button and using the "Increase/Decrease" pushbuttons underneath can adjust the setpoint to the desired value. The range of the Master controller is 1700 to 2335 psig with the normal setpoint being 2235 psig. The difference between actual pressure and reference pressure generates a pressure error. Depending on the size and polarity of the error, the Pressurizer Pressure Master will cause various control functions to actuate in attempts to restore actual pressure back to the reference value.

APE040 AA2.03 - Steam Line Rupture

bility to determine and interpret the following as they apply to the Steam Line Rupture: (CFR: 43.5 / 45.13)

ifference between steam line rupture and LOCA .....

Given the following conditions on Unit 1:

- Pzr level is slowly decreasing
- Charging flow is slowly increasing
- NC system temperature is decreasing slowly
- S/G levels are being controlled at program level
- The Rod Control Power Mismatch (PMM) indication is (+)1.5°F

Which ONE (1) of the following describes the procedure that will be entered and the FIRST action required based on current conditions?

A. AP/1/A/5500/001 (Steam Leak)
Reduce turbine load to maintain Rx power less than or equal to 100%.

B. AP/1/A/5500/001 (Steam Leak)
Manually throttle1NV-238 (Charging Line Flow Control) to stabilize Pzr level.

C. AP/1/A/5500/010 (Reactor Coolant Leak) Case II (NC System Leak)
Reduce turbine load to maintain Rx power less than or equal to 100%.

D. AP/1/A/5500/010 (Reactor Coolant Leak) Case II (NC System Leak)
Manually throttle 1NV-238 (Charging Line Flow Control) to stabilize Pzr level.

General Discussion

The stem of the question provided indications, most of which are common to both a small LOCA and a small steam break. The applicant is asked to select the correct procedure by identifying the event. The indication given that is not consistent with a LOCA is elevated reactor power. The actions given to either reduce reactor power or manually throttle charging flow are addressed in both procedures but it the scenario given, the first action to be performed by the operators would be to reduce turbine load.

Answer A Discussion

CORRECT: See explanation above.

Answer B Discussion

INCORRECT: See explanation above.

PLAUSIBLE: Procedue is correct and the actions provided are contained in AP-01 but come later in the procedure.

Answer C Discussion

INCORRECT: See explanation above.

PLAUSIBLE: PZR level and pressure are correct for an NCS leak, but Tave and power would not be affected. Response is correct to address the overpower condition.

Answer D Discussion

INCORRECT: See explanation above.

PLAUSIBLE: PZR level and pressure are correct for an NCS leak, but Tave and power would not be affected. Response is correct if the event was a LOCA.

Basis for meeting the KA

K/A is matched because in order to correctly answer this question, the applicant must demonstrate the ability to interpret a given set of conditions and determine whether the cause is due to a steam break or LOCA.

Basis for Hi Cog

This is a hi cog question because it involves a level of analysis of given situation. This involves a multi-part mental process where the applicant must evaluate the indications given and determine its meaning related to the scenario given.

Basis for SRO only

Job Level	Cognitive Level	QuestionType	Question Source
RO	Comprehension	BANK	Bank CNS Q878

Development References

From AP-01 Background Document Pg 2
From AP-01 Background Document Pg 4
From AP-01 (Steam Leak) Pg 3 of 42
From AP-10 Case 2 (Steam Leak) Pg 38 of 127

OP-MC-TA-AT Obj. 05
OP-MC-AP-1 Obj. 2

Student References Provided

APE040 AA2.03 - Steam Line Rupture
Ability to determine and interpret the following as they apply to the Steam Line Rupture: (CFR: 43.5 / 45.13)
Difference between steam line rupture and LOCA .....

401-9 Comments:

Remarks/Status

401-9 Comments:

It's common knowledge that power would not go up for a LOCA. Drop the first bullet and C and D will be plausible. The Q is currently a U because C and D are NP.

Resolution / Comments:

QUESTION 46

2546

A

By removing power completely from the question, the applicant has no way to discriminate whether the event is a Steam Leak or a LOCA. As a compromise, removed power indication and pressurizer pressure indication bullets and added a bullet providing Rod Control system Power Mismatch (PMM). By doing this the applicant is not given power indication directly and has to interpret the Rod Control system indication to determine that Nuclear Power is increasing faster than Turbine Power which would indicate a steam leak. Also, replaced "should" with "will" in the stem of the question per Lead Examiner's General Comments. See attached file for proposed question revision.

Question 46 References:

OP-MC-TA-AT Obj. 05

SEQ	OBJECTIVE	NLO	NLOR	LPRO	LPSO	LOR
4	Given the initial conditions, discuss Abnormal Transients associated with High or Low Failure of an Instrument Channel. TAAT004			X	X	
5	Given the initial conditions, discuss Abnormal Transients associated with accidents which could occur at McGuire. TAAT005			X	X	
6	With the aid of Abnormal and Emergency Procedures, discuss the affect the above transients will have on plant normal and emergency systems. TAAT006			X	X	

OBJECTIVES

	OBJECTIVE	NLO	NLOR	LPRO	LPSO	LOR
1	Explain the purpose for AP/01 (Steam Leak). AP01001			X	X	X
2	Analyze the mitigating strategy (major actions) contained in the procedure. AP01002			X	X	X
3	Given scenarios describing accident events and plant conditions, evaluate the basis for any caution, note, or step. AP01003			X	X	X
4	Given scenarios describing accident events and plant conditions, evaluate conditions which require application of continuous action steps. AP01004			X	X	X

From AP-01 Background Document Pg 2

Summary

For relatively small steam breaks, normal plant control systems are capable of maintaining nominal or near nominal operating conditions. For a small steamline break upstream of the turbine stop valves, the system transient response would be similar to a step load increase. The secondary system would indicate an increase in load with a resultant decrease in primary system average temperature and pressure. The control rods would withdraw from the core in an effort to restore the primary average temperature if the rod control system was in an automatic mode of operation. Due to the apparent increased load, steam flow from the steam generators would be increasing. With the MSIVs open, all loops would experience increased steam flow. Due to the increased steam flow, the feedwater control valves would modulate to a more open position in an attempt to maintain steam generator water level. As a result, main feed flow would be increased. Another indication of this type of break would be a decreasing water level in the condenser hotwell. A containment temperature and/or pressure increase may be observed if the break occurred inside containment. If the break was outside containment, an audible or visual confirmation of the break may be possible. A drop in generator MW output may also be observed. Larger size breaks may require reactor trip and/or safety injection.

A different set of symptoms might be encountered for steam leaks that occur downstream of the turbine (on extraction lines, MSR's, and feedwater heaters). For these locations, it may be possible to observe a change in plant efficiency; however, an audible or visual indication may be the first symptom encountered.

ENTRY CONDITIONS

This procedure can be entered any time the listed symptoms are encountered. It should be noted that the symptom "Observed secondary steam leak" is the only symptom that definitively identifies a steam leak (and even then the magnitude of the leak may be considered for entry conditions). The other symptoms could indicate a steam leak, or some other event. In some cases the combination of symptoms can be the best indication the event is a steam leak and not some other event.

From AP-01 Background Document Pg 4

STEP 2:

PURPOSE:

Prevent exceeding maximum thermal output and prevent an uncontrolled cooldown.

DISCUSSION:

Reactivity management dictates controlling reactor power less than or equal to 100%. Since steam demand determines reactor power, the increase in steam demand from the leak must be promptly compensated for by a decrease in steam demand from turbine load. During a transient, if reactor power is less than secondary power, temperature will decrease, adding positive reactivity. This will continue as long as reactor power is lower. The first part of the step (reactor power less than 100%) ensures maximum thermal power is not exceeded.

Determining reactor power less than 100% can be difficult during a steam leak transient. Thermal power best estimate is averaged over time, so there is a delay indicating reactor power has gone above 100%. The steam leak cools T-ave, which decreases the flux the excore NI's see, causing them to read potentially several percent low. One good real time indicator of reactor power is the NC loop D/T's.

The third part of the step (T-ave at T-ref) ensures the power transient is turned. If turbine load is cut to the extent that T-ave is restored to T-Ref, this indicates that reactor power has caught up with secondary power (or else T-ave couldn't be increasing). Reactor power catches up when the turbine load has been reduced by the amount of the steam leak.

The T-ave AT T-REF criterion is also included in this step for those scenarios involving a steam leak with the plant less than 100% power. Again, ensuring T-ave turned is a good indicator enough turbine load has been cut to control the reactivity transient.

This step is early in the procedure to prevent unnecessary isolation of L/D if NCS inventory can be maintained after reducing turbine load (by not allowing T-ave to continue to decrease).

ACTION/EXPECTED RESPONSE	RESPONSE NOT OBTAINED
C. Operator Actions	
__ 1. **Monitor Foldout page.**	
2. **Reduce turbine load to maintain the following:**	
__ • Excore NI's - LESS THAN OR EQUAL TO 100%	
__ • NC Loop D/T's - LESS THAN 60°F D/T	
__ • T-Avg - AT T-REF.	
__ 3. **Check containment entry - IN PROGRESS.**	__ **GO TO Step 5.**
__ 4. **Check steam leak - KNOWN TO BE OUTSIDE CONTAINMENT.**	**IF conditions warrant, THEN evacuate containment as follows:** __ a. Announce "All personnel evacuate Unit 1 containment". __ b. Actuate the containment evacuation alarm. __ c. **REFER TO** RP/0/A/5700/011 (Conducting a Site Assembly, Site Evacuation, or Containment Evacuation) as time allows.
__ 5. **Check Pzr pressure prior to event - GREATER THAN P-11 (1955 PSIG).**	__ **IF AT ANY TIME an S/I occurs due to steam leak, THEN GO TO Enclosure 2 (S/I Actions For Steam Break In Modes 3 and 4).**

ACTION/EXPECTED RESPONSE	RESPONSE NOT OBTAINED
__ 2. **Check Pzr level - STABLE OR GOING UP.**	**Perform the following as required to maintain level:** __ a. Maintain charging flow less than 200 GPM at all times in subsequent steps. __ b. Ensure 1NV-238 (Charging Line Flow Control) opening. __ c. Open 1NV-241 (U1 Seal Water Inj Flow Control) while maintaining NC pump seal flow greater than 6 GPM. __ d. Reduce or isolate letdown. __ e. Start additional NV pump. f. **IF** Pzr level cannot be maintained greater than 4%, **OR** Pzr level going down with maximum charging flow, **THEN** perform the following: 1) **IF** in mode 3 or above, prior to CLA isolation, **THEN** perform the following: __ a) Trip reactor. __ b) **WHEN** reactor tripped **OR** auto S/I setpoint reached, **THEN** ensure S/I initiated. __ c) **GO TO** EP/1/A/5000/E-0 (Reactor Trip or Safety Injection). __ 2) **IF** in mode 3 after CLA isolation or in mode 4, **THEN GO TO** AP/1/A/5500/34 (Shutdown LOCA). __ 3) **IF** T-Avg is less than 200°F, **THEN GO TO** AP/1/A/5500/19 (Loss Of ND Or ND System Leakage), while continuing in this procedure as time allows.

Parent Question CNS Q878

CNS RO Q878 Ans: C

Unit 1 is at 100% RTP. The RO reports the following plant parameters:

- RTP has slowly increased to 100.2%
- Pzr Pressure is slowly decreasing
- Pzr Level is slowly decreasing
- Charging Flow is slowly increasing
- NC Temperature is slowly decreasing
- S/G Levels are being controlled at program level

Which one of the following describes the procedure that should be entered and the **FIRST** action required based on current conditions?

A. AP/1/A/5500/010 (Reactor Coolant Leak) Case II (NC System Leak)
Reduce turbine load to maintain Rx power less than or equal to 100%

B. AP/1/A/5500/010 (Reactor Coolant Leak) Case II (NC System Leak)
Manually throttle 1NV-294 (NV Pmps A&B Disch Flow Ctrl) to stabilize Pzr level.

C. AP/1/A/5500/028 (Secondary Steam Leak)
Reduce turbine load to maintain Rx power less than or equal to 100%

D. AP/1/A/5500/028 (Secondary Steam Leak)
Manually throttle 1NV-294 (NV Pmps A&B Disch Flow Ctrl) to stabilize Pzr level.

APE054 AK1.02 - Loss of Main Feedwater (MFW)

Knowledge of the operational implications of the following concepts as they apply to Loss of Main Feedwater (MFW): (CFR 41.8 / 41.10 / 45.3)

Effects of feedwater introduction on dry S/G .....

Given the following conditions on Unit 1:

- The unit has experienced a feedwater line break of the 1A S/G inside containment and a total loss of feedwater
- FR-H.1 (Response to Loss of Secondary Heat Sink) has been entered and feed and bleed of the NC system was initiated
- Shortly after opening the PORVs, the Turbine Driven CA pump is returned to service and a source of feedwater is available
- CET's are stable
- All S/G WR levels are indicating 0%
- Containment pressure is 3.5 PSIG

1. Based on the conditions described above which ONE (1) of the following describes the criteria for restoration of CA flow?

2. What is the basis for the restoration of flow criteria?

A. 1. Restore cooling to ALL intact S/G's at a rate not to exceed 100 GPM
   2. To minimize additional NC cooldown causing thermal stress to the reactor vessel

B. 1. Restore cooling to ALL intact S/G's at a rate not to exceed 100 GPM
   2. To minimize the thermal stress on the S/G to prevent failure of S/G components

C. 1. Restore cooling to ONE intact S/G at a rate not to exceed 100 GPM
   2. To minimize additional NC cooldown causing thermal stress to the reactor vessel

D. 1. Restore cooling to ONE intact S/G at a rate not to exceed 100 GPM
   2. To minimize the thermal stress on the S/G to prevent failure of S/G components

---

General Discussion

In the scenario given, a loss of feedwater/heat sink had occurred. FRP H-1 has been implemented and feed and bleed was established. When the capability to feed from AFW is restored the procedure contains a continuous action statement in the RNO for Step 7 e to return to step 7.h. is CA is restored and Step 35 has been performed which it would have since feed and bleed has been established.

With all S/G <17% WR level (all dry), H-1 directs that flow be established to one intact S/G at less than or equal to 100 GPM. There is a note prior to this step concerning the risk of thermal shock to the S/G and also a caution in FR H-5 (Response to S/G Low Level) which reads "Initiating feed flow to a dry S/G causes thermal stresses and raises the risk of S/G failure, especially on the S/G shell. The risk is greatest at higher S/G temperatures."

Answer A Discussion

INCORRECT: See explanation above.

PLAUSIBLE: First part is correct for flow rate but only one S/G will be fed; if CET's were increasing then feeding all of intact S/G's would be correct and therefore plausible.

Second part is plausible because overcooling the NC system is stated in H-1 as a concern in multiple notes and cautions concerning initiating feed to a dry generator.

Answer B Discussion

INCORRECT: See explanation above.

PLAUSIBLE: First part is correct for flow rate but only one S/G will be fed; if CET's were increasing then feeding all of intact S/G's would be correct and therefore plausible.

Second part regarding the basis is correct and therefore plausible.

Answer C Discussion

INCORRECT: See explanation above.

PLAUSIBLE: First part is correct.

Second part is plausible because overcooling the NC system is stated in H-1 as a concern in multiple notes and cautions concerning initiating feed to a dry generator.

Answer D Discussion

CORRECT: See explanation above.

Basis for meeting the KA

K/A is matched because a loss of feedwater has occurred and the question is testing knowledge related to how many S/G's will initially be fed (operational implication) and what concern is being addressed by this strategy (effects of feedwater introduction on dry S/G).

Basis for Hi Cog

This is a hi cog question because it involves a level of analysis of given situation. This involves a multi part mental process where the applicant must evaluate the indications given and determine its meaning related to the scenario given and determine a course of action and the basis for that action.

Basis for SRO only

Job Level	Cognitive Level	QuestionType	Question Source
RO	Comprehension	NEW	

Development References

From FRP H-1 Page 6 of 93

-MC-EP-FRH Obj: 4

Student References Provided

APE054 AK1.02 - Loss of Main Feedwater (MFW)

Knowledge of the operational implications of the following concepts as they apply to Loss of Main Feedwater (MFW): (CFR 41.8 / 41.10 / 45.3)

Effects of feedwater introduction on dry S/G .....

401-9 Comments:

Remarks/Status
401-9 Comments: No comment. ---------- Resolution / Comments: N/A

Question 47 References:

OP-MC-EP-FRH Obj: 4

OBJECTIVES

SEQ	OBJECTIVE	NLO	NLOR	LPRO	LPSO	LOR
1	Explain the purpose of each procedure in the FR-H series. EPFRH001			X	X	
2	Discuss the entry and exit guidance for each procedure in the FR-H series. EPFRH002			X	X	
3	Discuss the mitigating strategy (major actions) of each procedure in the FR-H series. EPFRH003			X	X	X
4	Discuss the basis for any note, caution or step for each procedure in the FR-H series. EPFRH004			X	X	X
5	Given the Foldout page, discuss the actions included and the basis for these actions. EPFRH005			X	X	X
6	Given the appropriate procedure, evaluate a given scenario describing accident events and plant conditions to determine any required action and its basis. EPFRH006			X	X	X
7	Discuss the time critical task(s) associated with the FR-H series procedures including the time requirements and the basis for these requirements. EPFRH007			X	X	X

ACTION/EXPECTED RESPONSE	RESPONSE NOT OBTAINED
7. (Continued)	
__ h. Check any S/G W/R level - LESS THAN 12% (17% ACC).	h. Perform the following: __ 1) Throttle open CA control valves to establish CA flow to S/Gs. __ 2) **GO TO** Step 37.
NOTE • It may be preferable to feed 1B or 1C S/G first, to maintain steam supply for TD CA pump • Selecting S/G with highest level will reduce risk of thermal shock to S/G when reestablishing feed flow.	
__ i. Check core exit T/Cs - STABLE OR GOING DOWN.	i. Perform the following: __ 1) Throttle open CA control valve to one S/G to establish flow rate required to lower core exit T/Cs. __ 2) **IF** core exit T/Cs continue to go up, **THEN** throttle open CA control valve to feed another S/G as required to lower core exit T/Cs. __ 3) **GO TO** Step 7.m.
__ j. Slowly throttle open CA control valve to one S/G to establish feed flow less than or equal to 100 GPM.	
__ k. Maintain feed flow rate less than or equal to 100 GPM until S/G WR level is greater than 12% (17% ACC).	
__ l. **WHEN** S/G W/R level is greater than 12% (17% ACC), **THEN** feed flow may be raised greater than 100 GPM.	
__ m. Check S/G W/R levels on intact S/Gs with feed flow isolated - ANY GREATER THAN 12% (17% ACC).	__ m. **GO TO** Step 7.o.
__ n. Slowly establish flow to any available intact S/G with level greater than 12% (17% ACC).	

ACTION/EXPECTED RESPONSE	RESPONSE NOT OBTAINED
4. **Check affected S/G(s) - INTACT:** __ • Affected S/G pressure - STABLE OR GOING UP __ • Affected S/G - PRESSURIZED.	**IF affected S/G pressure going down in an uncontrolled manner OR is depressurized, THEN:** __ • **IF** affected S/G(s) previously identified as faulted, **THEN RETURN TO** procedure in effect. __ • **IF** affected S/G(s) has not been isolated, **THEN GO TO** EP/1/A/5000/E-2 (Faulted Steam Generator Isolation).
__ 5. **Check CA flow to affected S/G(s) - GREATER THAN 25 GPM.**	**Perform the following:** __ a. **IF** affected S/G(s) W/R level is greater than 12% (17% ACC), **THEN** establish CA flow as necessary to refill affected S/G(s). **CAUTION** **Initiating feed flow to a dry S/G causes thermal stresses and raises the risk of S/G failure, especially on the S/G shell. The risk is greatest at higher S/G temperatures.** b. **IF** affected S/G(s) W/R level is less than 12% (17% ACC), **THEN**: __ 1) Leave feedwater isolated to affected S/G(s). __ 2) Contact station management to evaluate refilling affected S/G(s) as part of long-term plant recovery. __ 3) **RETURN TO** procedure and step in effect.
__ 6. **Continue raising affected S/G(s) N/R level to greater than 11% (32% ACC).**	

EPE055 EA2.01 - Loss of Offsite and Onsite Power (Station Blackout)
bility to determine or interpret the following as they apply to a Station Blackout : (CFR 43.5 / 45.13)
xisting valve positioning on a loss of instrument air system .....

Given the following plant conditions:

- Due to a fault at the switch yard, the site has experienced a LOOP
- Unit 1 subsequently lost both D/G's
- Due to a rupture of the Diesel VI compressor discharge piping, VI header pressure is indicating 0 PSIG
- The crew is performing ECA 0.0 (Loss of All AC Power)
- Prior to this event, Unit 1 was at 100% RTP with normal L/D in service and flow being controlled with 1NV-459 (U1 Variable L/D Orifice Outlet Flow Cntrl)
- The Crew is performing Step 6 of ECA 0.0 "Check NC System - ISOLATED"

Assuming no manual operator action has been taken associated with these components, which ONE (1) of the following correctly lists the expected "As Found" positions for the valves listed below?

- 1NV-35A (Variable L/D Orifice Outlet Cont Isol)
- 1NV-1A (NC L/D Isol To Regen Hx)

A. 1NV-35A - CLOSED
1NV-1A - CLOSED

B. 1NV-35A - OPEN
1NV-1A - CLOSED

C. 1NV-35A - CLOSED
1NV-1A - OPEN

D. 1NV-35A - OPEN
1NV-1A - OPEN

General Discussion

With conditions given, there has been a loss of all AC (Station Blackout) along with a loss of VI. For this question had to include a VI header rupture in addition to Blackout. Since MNS has Diesel VI compressors it is not plausible to lose VI system pressure soley because a Blackout has occurred.

The applicant is asked to determine the expected postions of 2 valves in the letdown section of the CVCS system. Both of these valves would be required to be checked per ECA 0.0 Step 6. Even though both are powered from EVDA which is a bus which would remain energized with the conditions given, both of these valves would be closed. Both are supplied from VI which has been lost and would result in both valves failing closed.

Answer A Discussion

CORRECT: See explanation above.

Answer B Discussion

INCORRECT: See explanation above.

PLAUSIBLE: 1NV-35 would remain energized via vital batteries and would not have been manually closed. The applicant could conclude that it would therefore remain open.
Position is correct for 1NV-1A.

Answer C Discussion

INCORRECT: See explanation above.

PLAUSIBLE: Position is correct for 1NV-35A it would be closed. The applicant could conclude that 1NV-1A would remain open because it would have been open prior to the event and as stated in the stem, no manual action was taken to close it. Like 1NV-35A it would have remain energized during the event.

Answer D Discussion

INCORRECT: See explanation above.

PLAUSIBLE: 1NV-35 would remain energized via vital batteries and would not have been manually closed. The applicant could conclude that it would therefore remain open. The applicant could believe that 1NV-1A would remain open because it would have been open prior to the event and as stated in the stem, no manual action was taken to close it. Like 1NV-35A it would have remain energized during the event.

Basis for meeting the KA

K/A is matched because the question has placed the plant is a situation where both a station blackout has occurred and a loss of IAS. The applicant is then asked to determine the existing valve positions of two NV valves which have not been manually manipulated.

Basis for Hi Cog

This question is Hi Cog because the applicant must evaluate a given set of conditions and through a multipart mental process, determine the existing valve positions for the two valves in question.

Basis for SRO only

Job Level	Cognitive Level	QuestionType	Question Source
RO	Comprehension	NEW	

Development References

OP-MC-PS-NV Page 23 (Rev 58)
From OP-MC-PS-NV Page 55 (Rev 58)
ECA 0.0 Page 4 of 174 (Rev 26)
AP-22 (Loss of VI) Page 107 of 121 (Rev 28)
AP-22 (Loss of VI) Page 107 of 121 (Rev 28)

OP-MC-PS-NV Obj: 7

Student References Provided

PE055 EA2.01 - Loss of Offsite and Onsite Power (Station Blackout)
Ability to determine or interpret the following as they apply to a Station Blackout : (CFR 43.5 / 45.13)
Existing valve positioning on a loss of instrument air system .....

QUESTION 48 2548 A

401-9 Comments:

Remarks/Status

401-9 Comments:

No comment.

Resolution / Comments:

N/A

Question 48 References:

OP-MC-PS-NV Obj: 7

SEQ	OBJECTIVE	NLO	NLOR	LPRO	LPSO	LOR
5	Explain the basic operation of the NV System for the following: • Normal L.D. Purification • Seal Injection Flow • Chemical Addition • Charging • Centrifugal Charging Pumps • All Modes of Makeup • PD Pump Control • Safeguards Actuation • Charging/Letdown Flow Balance • Excess Letdown • Emergency Boration • Pressurizer Spray	X	X	X	X	
6	Describe the various system parameters indicated in the Control Room associated with the NV System in ALL modes of operation.			X	X	X
7	List the "fail" position of NV valves on loss of power or air.			X	X	X
8	Describe the as-built configuration of the VCT level instrumentation.	X	X	X	X	
9	Using fundamental instrumentation knowledge and given specific reference and variable leg configurations for the Volume Control Tank, predict the effect on indicated versus actual level for various failures.	X	X	X	X	

2.3 Letdown Orifice / Letdown Throttle Valves

Objective # 4

The letdown orifice / letdown throttle valves are designed to reduce the NC system pressure by ≅ 1900 psig and to control the letdown flow. The orifice reduces flow to 45 gpm and is isolated by NV-457A. One letdown throttle valve, NV-454, is manually set at 75 gpm via the Valve Checklist OP. It is isolated by NV-458A. In addition, there is a flow control valve, NV-459, that is controlled by a manual loader on the control board or on the Auxiliary Shutdown Panel (ASP).

The flow control valve, NV-459, allows the operator to control flow when heating up the letdown path to avoid thermal shock (water hammer, etc.) and provides for increased letdown flow during low-pressure operation. **NV-459 is also the preferred flow path during normal operation.**

The letdown orifice isolation valves (NV 457A, NV-458A, NV-35A) are each controlled by a three position switch (Open-Automatic-Close) from the Control Room or the ASP. The ASP has a Remote-Local switch. They function as containment isolation valves in addition to providing a means to isolate the orifice / letdown throttle valves. NV-457A, NV-458A and NV-35A have the following interlocks:

- Auto close on Low Pzr Level (17%)
- Auto close if NV-1A or NV-2A closes
- Auto close on Phase "A" isolation (S_t).

In a Loss of Letdown event (AP-12) with the orifice isolation valves going closed, it may become necessary to locally pressurize the letdown header from the charging header, in order to prevent water hammer. NV-106 (a manual valve in the pipe chase) will allow the repressurization of the letdown line from the charging header.

NV-6 serves as over-pressure relief protection for the letdown piping downstream of the letdown isolation valves. Relief setpoint is 600 psig and it relieves to the PRT.

2.4 NV-7B (L/D Containment Isolation Valve)

NV-7B closes on a Phase "A" Containment Isolation signal (S_t) and is normally controlled from the Control Room.

2.5 NV-121 (L/D from ND System)

NV-121 allows letdown from the ND System for NC system cleanup when the differential pressure across the orifices is too small. Also it is used to initially pressurize the ND system when placing it in service during unit shutdown.

From OP-MC-PS-NV Page 55 (Rev 58)

NV-1047A - Recirc Valve NV-1047A has "Open-Close" pushbuttons. The valve will close 2 minutes after the PD Pump starts.

PDP Control Board M/A Station - In Manual, the raise/lower pushbuttons are used to control PD Pump speed. The PD Pump is always operated in Manual, since IAE does not maintain the Auto portion of the PD Pump Speed Controller. In the Auto mode, the Pressurizer Level Master controller input controls PD pump speed. However, Auto is not used.

A Suction Dampener was installed to reduce vibration of the PD Pump. A local On/Off switch, with associated indicating lights, controls the Suction Dampener heater.

NV Lube Oil Pumps – The CCP auxiliary lube oil pumps are controlled from the Main Control Board, MC-10, with "Auto-Man-Start-Stop" pushbuttons. In Auto, the lube oil pump will start if the CCP is running and lube oil pressure is < 8 psig.

NC Letdown Isolation Valves (NV-1A, NV-2A) – Each valve is controlled from the Main Control Board, MC-10, with a 3-position switch, "Open-Auto-Close," with spring return to Auto. They may also be controlled from the ASP. There is a "Remote-Local" switch at the ASP to determine control. These valves close on Low Pressurizer Level of 17%. They will Fail Closed on loss of power. NV-1A closes when control is transferred to the SSF.

Letdown Orifice Isolation Valves (NV-457A, NV-458A, NV-35A) – Each valve is controlled from the Main Control Board, MC-10, with a 3-position rotary switch, "Open-Auto-Close" with spring return to Auto. The valves may also be controlled from the ASP. There is a "Remote-Local" switch at the ASP to determine control. These valves will Auto Close on the following: 1) an S_t signal, 2) Low Pressurizer Level (17%), and 3) if NV-1A or NV-2A close. The Letdown Orifice Isolation Valves must have a Full-Open indication prior to releasing the switch "Open" position to prevent reclosure of the associated valve.

NV-459 – The Letdown Flow Control Valve is controlled from the Main Control Board, MC-10, by a Manual Loader. The valve may also be controlled from the ASP. This valve fails closed. The valve will close on a loss of KXA for U1 and on a loss of KXB on U2.

NV-7B – The Letdown Containment Outside Isolation Valve is controlled from the Main Control Board, MC-10, by "Open-Close" pushbuttons. This valve will Auto-Close on an S_T signal.

NV-124 - The Letdown Pressure Control Valve is controlled by a Manual-Auto Station Pressure Controller on MC-10. In Auto, the controller receives input from a pressure transmitter downstream of the Letdown Heat Exchanger. In Manual, the operator positions NV-124 with the Open/Close pushbuttons on the M/A station. The valve fails open.

NV-127A – The Letdown Heat Exchanger Outlet 3-Way Temperature Control Valve is controlled by a 3-position rotary switch, VCT-Normal-Demin, on MC-10 with spring return to Normal. The valve automatically shifts to the VCT if a high temperature occurs in the NV letdown line. The valve fails to the VCT position on a loss of air.

ACTION/EXPECTED RESPONSE	RESPONSE NOT OBTAINED
6. **Check NC System - ISOLATED:**	
a. Check the following letdown orifice isolation valves - CLOSED:	__ a. CLOSE valve(s).
__ 1) 1NV-458A (75 GPM L/D Orifice Outlet Cont Isol).	
__ 2) 1NV-457A (45 GPM L/D Orifice Outlet Cont Isol).	
__ 3) 1NV-35A (Variable L/D Orifice Outlet Cont Isol).	
b. CLOSE the following valves:	
__ 1) 1NV-1A (NC L/D Isol To Regen Hx).	
__ 2) 1NV-2A (NC L/D Isol To Regen Hx).	
__ c. Check Pzr PORVs - CLOSED.	__ c. **IF** Pzr pressure less than 2315 PSIG, **THEN** CLOSE all Pzr PORVs.
d. Check the following excess letdown isolation valves - CLOSED:	__ d. CLOSE valve(s).
__ • 1NV-24B (C NC Loop To Exs L/D Hx Isol)	
__ • 1NV-25B (C NC Loop To Exs L/D Hx Isol).	
__ e. Check 1NV-121 (U1 ND Letdown Control) - CLOSED.	__ e. CLOSE valve.

8. **NV valves:**

a. The following NV valves fail open:

__ • 1NV-16A (NV Supply To D NC Loop Isol)
__ • 1NV-13B (NV Supply To A NC Loop Isol)
__ • 1NV-34A (A NC Pump Seal Return Isol)
__ • 1NV-50B (B NC Pump Seal Return Isol)
__ • 1NV-66A (C NC Pump Seal Return Isol)
__ • 1NV-82B (D NC Pump Seal Return Isol)
__ • 1NV-124 (Letdown Pressure Control)
__ • 1NV-238 (Charging Line Flow Control)
__ • 1NV-241 (U1 Seal Water Inj Flow Control)
__ • 1NV-267A (Boric Acid To Blender Control).

b. The following NV valves fail to the VCT position:

__ • 1NV-27B (Excess L/D Hx Otlt 3-Way Cntrl)
__ • 1NV-127A (L/D Hx Outlet 3-Way Temp Cntrl)
__ • 1NV-137A (NC Filters Otlt 3-Way Cntrl).

c. The following NV valves fail closed:

__ • 1NV-1A (NC L/D Isol To Regen Hx)
__ • 1NV-2A (NC L/D Isol To Regen Hx)
__ • 1NV-21A (NV Spray To PZR Isol)
__ • 1NV-24B (C NC Loop To Exs L/D Hx Isol)
__ • 1NV-25B (C NC Loop To Exs L/D Hx Isol)
__ • 1NV-26B (U1 Excess L/D Hx Outlet Cntrl)
__ • 1NV-35A (Variable L/D Orifice Outlet Cont Isol)
__ • 1NV-39A (A NC Pump Standpipe Fill)
__ • 1NV-55B (B NC Pump Standpipe Fill)
__ • 1NV-71A (C NC Pump Standpipe Fill)
__ • 1NV-87B (D NC Pump Standpipe Fill)
__ • 1NV-92A (NC Pumps Seal Byp Return Hdr Isol)
__ • 1NV-121 (U1 ND Letdown Control)
__ • 1NV-167A (VCT Vent To WG Isol)
__ • 1NV-171A (BA Blender To VCT Inlet)
__ • 1NV-175A (BA Blender to VCT Outlet)
__ • 1NV-457A (45 GPM L/D Orifice Outlet Cont Isol)
__ • 1NV-458A (75 GPM L/D Orifice Outlet Cont Isol)
__ • 1NV-459 (U1 Variable L/D Orifice Outlet Flow Cntrl)
__ • 1NV-840A (U1 ND To Pzr Aux Spray Control).

10. **NV System:**

- The following valves fail closed:

__ • 1NV-1A (NC L/D Isol To Regen Hx)

__ • 1NV-2A (NC L/D Isol To Regen Hx)

__ • 1NV-457A (45 GPM L/D Orifice Outlet Cont Isol)

__ • 1NV-458A (75 GPM L/D Orifice Outlet Cont Isol)

__ • 1NV-35A (Variable L/D Orifice Outlet Cont Isol)

__ • 1NV-171A (BA Blender To VCT Inlet)

__ • 1NV-175A (BA Blender to VCT Outlet)

__ • 1NV-252A (Rx M/U Water To Blender Control)

__ • 1NV-167A (VCT Vent To WG Isol)

__ • 1NV-39A (A NC Pump Standpipe Fill)

__ • 1NV-71A (C NC Pump Standpipe Fill)

__ • 1NV-21A (NV Spray To PZR Isol)

__ • 1NV-92A (NC Pumps Seal Byp Return Hdr Isol)

__ • 1NV-840A (U1 ND To Pzr Aux Spray Control).

- The following valves fail open:

__ • 1NV-16A (NV Supply To D NC Loop Isol)

__ • 1NV-267A (Boric Acid To Blender Control)

__ • 1NV-34A (A NC Pump Seal Return Isol)

__ • 1NV-66A (C NC Pump Seal Return Isol).

- The following valves fail to "VCT" position:

__ • 1NV-127A (L/D Hx Outlet 3-Way Temp Cntrl)

__ • 1NV-137A (NC Filters Otlt 3-Way Cntrl).

APE056 AA2.50 - Loss of Offsite Power

bility to determine and interpret the following as they apply to the Loss of Offsite Power: (CFR: 43.5 / 45.13)

hat load and VAR limits, alarm setpoints, frequency and voltage limits for ED/Gs are not being exceeded .....

Given the following conditions on Unit 1:

- A loss of off-site power has occurred
- 1A and 1B DGs have started and loaded normally

Based on the following loading profile for 1A DG:

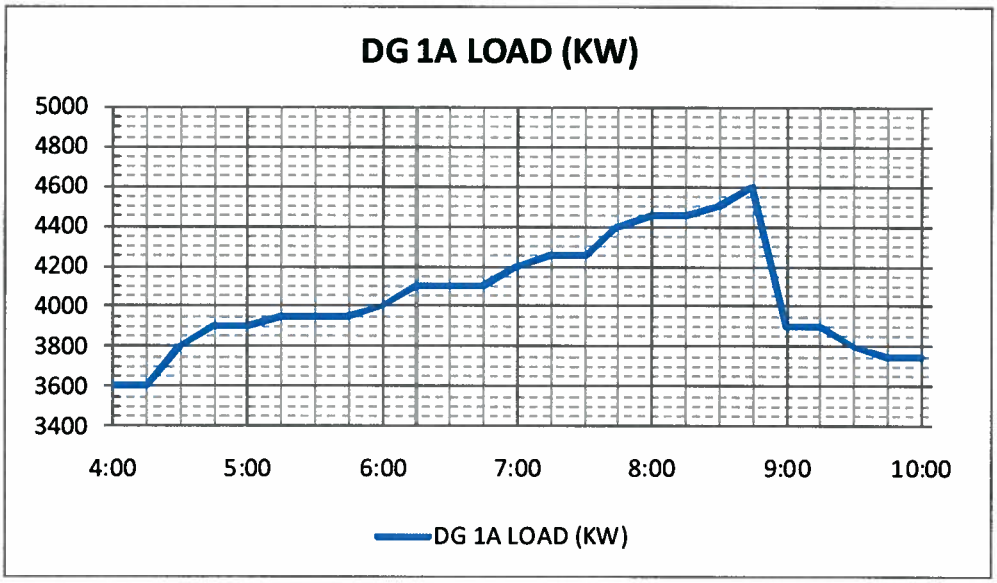

1. The maximum design load limit for CONTINUOUS operation was FIRST exceeded at ___(1)___.

2. The maximum design load limit for operation in an OVERLOAD condition was FIRST exceeded at ___(2)___.

Which ONE (1) of the following completes the statements above?

A. 1. 0430
   2. 0600

B. 1. 0600
   2. 0745

C. 1. 0430
   2. 0745

D. 1. 0600
   2. 0830

General Discussion

The maximum continuous load for an DG is 4000 KW. The DGs may be operated at up to 4400 KW for two hours in a 24 hour period.

The first time that the DG exceeded the continuous load limit of 4000KW was at 6:00. The DG exceeded the design overload limit of 4400KW at 7:45.

Answer A Discussion

INCORRECT: See explanation above.

PLAUSIBLE: Part 1 is plausible because the DG surveillance requires the DG to be tested at a minimum of 3800 KW to meet operability requirements.

Part 2 is plausible because 4000 KW is the maximum continuous load limit.

Answer B Discussion

CORRECT: See explanation above.

Answer C Discussion

INCORRECT: See explanation above.

PLAUSIBLE: Part 1 is plausible because the DG surveillance requires the DG to be tested at a minimum of 3800 KW to meet operability requirements.

Part 2 is correct.

Answer D Discussion

INCORRECT: See explanation above.

PLAUSIBLE: Part 1 is correct.

Part 2 is plausible if the applicant concludes that the maximum design overload limit is 4500 KW instead of 4400 KW.

Basis for meeting the KA

The KA is matched because a Loss of Offsite Power has occurred and the applicant must know the load requirements for the DGs and determine when those limits have been exceeded.

Basis for Hi Cog

This is a higher cognitive level because it required multiple mental steps to arrive at the correct answer. First, the applicant must recall from memory the limit for operating an EDG in an over-load condition (greater than 4000 KW but less than 4400 KW for 2 hours /24 hours). The applicant must then analyze the load profile for the EDG and determine when the DG exceeded the continuous load limit and maximum design overload limit.

Basis for SRO only

Job Level	Cognitive Level	QuestionType	Question Source
RO	Comprehension	NEW	

Development References	Student References Provided
Lesson Plan OP-MC-DG-DG Section 2.1	

APE056 AA2.50 - Loss of Offsite Power

Ability to determine and interpret the following as they apply to the Loss of Offsite Power: (CFR: 43.5 / 45.13)

That load and VAR limits, alarm setpoints, frequency and voltage limits for ED/Gs are not being exceeded .....

401-9 Comments:	Remarks/Status
	401-9 Comments: No comment. ----------

QUESTION 49

2549

B

Resolution / Comments:

N/A

Question 49 References:

From Lesson Plan OP-MC-DG-DG Section 2.1:

1.0 INTRODUCTION

1.1 Purpose

Objective # 1

The purpose of the Diesel Generators is to provide standby AC power to the equipment required to safely shut down the reactor in the event of a loss of normal power source.

The Diesel Generators will also supply power to the safeguards equipment as required during a major accident coincident with a loss of normal power source.

1.2 General Description

Objective # 2

At McGuire, two onsite diesels per unit are provided to respond to basically three major accident situations:

1. A Loss of Coolant Accident
2. A Blackout (loss of voltage to safeguards bus)
3. A combination Loss of Coolant Accident and a Blackout.

During a LOCA both diesels start and run but if normal power is available they will not close in on the bus.

During a Blackout both diesels will start, run, close in on the bus, and remain that way until the problem has been resolved.

During a Blackout followed by a LOCA the diesel generator will trip all non-LOCA loads and pick up all the LOCA loads not sequenced on by the Blackout Sequencer.

If there is a LOCA followed by a Blackout the diesel will pick up the LOCA loads that were being supplied prior to the Blackout.

Each diesel also has Local and Remote Manual loading capability.

NOTE: Both unit diesels have identical controls and instrumentation systems.

2.0 FUNCTIONAL DESCRIPTION

2.1 Design

Generator	Engine
4160 VAC, 3 Phase, 60 HZ	16 cylinders
4000 kW @ 0.8 pf Continuous power	514 RPM rated speed
4400 kW @ 0.8 pf for 2 hours/24 hours Over-load Capability	28 psig minimum operating lube oil pressure
Phase Differential (87G), and Overcurrent Protection (51V)	13.5" Bore / 16.5" Stroke
125 VDC, Field Flash @ 40% speed Excitation	5575 BHP

APE058 2.1.27 - Loss of DC Power
APE058 GENERIC
Knowledge of system purpose and/or function. (CFR: 41.7)

The Kirk Key interlocks located on the Vital Battery Charger Connection Boxes (ECB-1 thru 4) associated with EVCA, EVCB, EVCC and EVCD prevent _____.

Which ONE (1) of the following completes the statement above?

A. supplying 'A' Train Busses from the 'B' Train Source

B. tying a Unit 1 power source to a Unit 2 power source

C. energizing more than one battery from the Standby Charger

D. supplying two 125v DC Distribution Centers from the Standby Charger

---

General Discussion

The charger connection box breakers for EVCA, EVCB, EVCC, and EVCD are Kirk-Key Interlocked to allow only one breaker to be closed at a time. This prevents tying a Unit 1 power source to a Unit 2 power source.

Answer A Discussion

INCORRECT: See explanation above.

PLAUSIBLE: This answer is plausible because this is a function of the Kirk-Key interlock for the standby battery charger (EVCS).

Answer B Discussion

CORRECT: See explanation above.

Answer C Discussion

INCORRECT: See explanation above.

PLAUSIBLE: This answer is plausible because this is a function of the Kirk-key interlock associated with the standby charger (EVCS). However, it is NOT a function of the Kirk-Keys for the Vital Battery Charger connection boxes.

Answer D Discussion

INCORRECT: See explanation above.

PLAUSIBLE: This answer is plausible because this is a possible alignment with the standby charger.

Basis for meeting the KA

On a loss of DC power due to a fault, the Kirk Keys limit the impact of the loss of DC power by preventing cascading losses of DC equipment. Therefore, the K/A as it relates to "knowledge of the purpose or function" and a Loss of DC Power is met.

Basis for Hi Cog

Basis for SRO only

Job Level	Cognitive Level	QuestionType	Question Source
RO	Memory	BANK	MNS Exam Bank #ELEPL015

Development References

Learning Objective:
1) EL-EPL #9

References:
1) Lesson Plan OP-MC-EL-EPL Section 2.1

Student References Provided

APE058 2.1.27 - Loss of DC Power
APE058 GENERIC
Knowledge of system purpose and/or function. (CFR: 41.7)

401-9 Comments:

Remarks/Status

401-9 Comments:

No comment.

Resolution / Comments:

N/A

Question 50 References:

From Lesson Plan OP-MC-EP-EPL Section 2.1:

Since EVCS (spare battery charger) is identical to the other chargers it can be used to replace a normal charger (as necessary) by closing the appropriate key interlocked circuit breakers.

Objective # 8

The load demands normally placed on each unit battery charger will consist of its respective DC distribution center loads, as well as, the loads of the associated DC panelboards while still providing a "floating charge" (132 ± 1 volt) on its respective battery.

Each charger receives power from one of two redundant 600 VAC Essential Auxiliary Power System Motor Control Centers (one power supply from a Unit 1 MCC and the other from a Unit 2 MCC). The chargers are manually connected to either one of these two power supplies through their respective charger connection box.

1(2) EMXA are the MCCs feeding the connection boxes for EVCA and EVCC, while the MCCs feeding the connection boxes for EVCB and EVCD are 1(2) EMXB.

Objective # 9

The charger connection box breakers for EVCA, EVCB, EVCC, and EVCD are Kirk-Key Interlocked to allow only one breaker to be closed at a time. ***This prevents tying a Unit 1 power source to a Unit 2 power source.***

Charger startup involves closing the DC output breaker to the Distribution Center then the charger AC input breaker. The control board operator will then start the battery charger by depressing the start push-button, located on 1MC-8 in the Control Room, which closes a set of "m" contacts, located at the 600 V MCC, and provides AC power to the battery charger via the charger connection box. Then the Charger DC output breaker is closed connecting the charger to the DC loads.

Charger shutdown requires the control board operator to depress the stop push-button, located on 1MC-8 in the Control Room, followed by opening of the charger DC output, AC input breaker and then the DC output breaker to the Distribution Center.

Objective # 10 & 11

The standby charger (EVCS) is used when one of the normal battery chargers is unavailable for service (standby mode) or during an "equalizing charge" to one of the batteries. The two feeder breakers, located at EVDS (distribution center for battery charger EVCS), provide proper alignment of the standby charger during its operation (standby mode or equalizing charge mode). The standby charger can supply the A Train Distribution Centers (EVDA or EVDC) or the B Train Distribution Centers (EVDB or EVDD). Kirk-Key Interlocks, provided with all of the associated breakers, ensure that only one train of distribution centers can be supplied, from EVDS, at a time.

In the standby mode of operation EVCS will replace the out-of-service battery charger. During this mode of operation the out-of-service battery charger is disconnected from its distribution center with the spare charger connected to the distribution center through one of the distribution center (EVDS) breakers, discussed above. In addition, the tie breaker to the distribution center with the out-of-service battery charger must be closed.

During the "equalizing charge" mode the normal battery charger is disconnected from its distribution center and will be aligned in parallel with its respective battery. The normal battery charger will be placed in "Equalize" mode of operation. Battery charger (EVCS) will then supply the distribution center with the tie breakers closed (cross-tied with its "sister" channel). This same alignment is utilized during normal charger maintenance and battery discharge testing. During these operations, the normal charger remains in the "Float" mode.

Objective # 9

As discussed above, the breakers, associated with standby battery charger EVCS are Kirk-Key Interlocked. Referencing Training Drawing 7.1, Composite Vital I/C Drawing, may help in your understanding of the interlocks described below:

- The breakers at distribution center EVDS are Kirk Key Interlocked with each other and their respective connection box (ECB5) such that:
    1) The A Train feeder breaker from 1EMXH in ECB5 cannot be closed unless the A Train supply breaker for EVDA or EVDC (located at distribution center EVDS) is closed. ***This prevents the A Train source from supplying the B Train buses.***
    2) The B Train feeder breaker from 2EMXH in ECB5 cannot be closed unless the B Train supply breaker for EVDB or EVDD (located at distribution center EVDS) is closed. ***This prevents the B Train source from supplying the A Train buses.***
    3) Only one breaker from EVDS can be closed at a time. ***This prevents the standby charger from supplying both A Train and B Train buses.***
- In addition, the supply breakers to ECB5 (Connection Box) from 1EMXH and 2 EMXH are Kirk-Key Interlocked to prevent closure of both breakers at the same time. ***This interlock scheme in conjunction with 1 & 2 above prevent cross connection of A & B Train AC sources and minimizes mutual exposure of the two trains.***

2.2 125 VDC Vital Instrumentation and Control Power System Batteries

Both units (Unit 1 and 2) are provided with only four 125 VDC Vital Instrumentation and Control Power System batteries. Each battery consists of 60 total cells; with each cell packaged in a clear plastic, non-combustible, shock-absorbing container with the appropriate covers, racks, and accessories. The battery is connected to its respective DC distribution center, in parallel with its respective battery charger, and located in an individual and physically separate room within the main battery room.

Question 50 Parent Question:

ELEPL015

1 Pt The Kirk Key interlocks associated with the Vital Battery Charger Connection Boxes (EVCA, EVCB, EVCC, EVCD) prevent:

A. Paralleling the Standby battery charger with a normal battery charger.

B. Tying a Unit 1 power source to a Unit 2 power source.

C. Energizing more than one battery charger from the same power source.

D. Paralleling two batteries with one normal battery charger.

Answer 146

B

2010 MNS SRO NRC Examination QUESTION 51

2551

B

APE062 AK3.04 - Loss of Nuclear Service Water

Knowledge of the reasons for the following responses as they apply to the Loss of Nuclear Service Water: (CFR 41.4, 41.8 / 45.7)

Effect on the nuclear service water discharge flow header of a loss of CCW

Given the following conditions on Unit 1:

- The unit is at 100% RTP
- Train swap is in progress and currently both trains of KC and RN have been placed in service.
- The 1A RN pump TRIPPED
- A Unit 2 electrical fault causes a B/O associated with 2ETA.

Based on the conditions described above and assuming no operator action, which ONE (1) of the following describes the effect of this event on Unit 1?

A. Cooling flow would be lost to the 1A KC HX due to Unit 1 RN Train separation. The 1B RN Train suction and discharge alignment would be unaffected.

B. Cooling flow would be lost to the 1A KC HX due to Unit 1 RN Train separation. The 1B RN Train suction and discharge would realign to the SNSWP.

C. The 1B RN Pump would continue to supply cooling for the 1A KC HX because the Unit 1 RN Train cross connect valves remain open.
The 1B RN Train suction and discharge would realign to the SNSWP.

D. The 1B RN Pump would continue to supply cooling for the 1A KC HX because the Unit 1 RN Train cross connect valves remain open.
The 1B RN Train suction and discharge alignment would be unaffected.

General Discussion

In the stem, the applicant is presented with a situation where both trains of RN and KC were placed in service on U-1. The 1A RN pump has tripped but initially the 1B RN will provided cooling to both trains of KC via normally open RN train cross connect valves. A B/O then occurs on U-1. This would result in the A Train of RN on both units aligning to LLI (normally aligned there so no change) and the B Train of RN on both units realigning to the SNSWP. The signal would also result in train separation on both units (1 and 2 RN-41A would close) resulting in a loss of cooling to the 1A KC HX because the 1A RN pump is unavailable.

Answer A Discussion

INCORRECT: See explanation above.

PLAUSIBLE: First part of the answer is correct with the correct reason and therefore plausible.

The second part is plausible if the applicant thinks the U-2 signal only affects the U-2 RN alignment. This is not a unreasonable assumption.

Answer B Discussion

CORRECT: See explanation above.

Answer C Discussion

INCORRECT: See explanation above.

PLAUSIBLE: First part of the answer is plausible if the candidate fails to remember that the U-2 signal affects train separation on both Units.

The second part of this distracter is correct and therefore plausible.

Answer D Discussion

INCORRECT: See explanation above.

PLAUSIBLE: First part of the answer is plausible if the candidate fails to remember that the U-2 signal affects train separation on both Units.

The second part is plausible if the applicant thinks the U-2 signal only affects the U-2 RN alignment. This is not a unreasonable assumption.

Basis for meeting the KA

The K/A is matched because the applicant is presented with a scenario where, because of an unusual alignment and the introduction of a B/O signal, RN is lost to the U-1 KC HX. The applicant must demonstrate an understanding of the reason for the loss. Also the loss of cooling affects the CCW discharge flow header.

Basis for Hi Cog

The question is Hi cog because the applicant must analyze a given scenario and predict an outcome.

Basis for SRO only

Job Level	Cognitive Level	QuestionType	Question Source
RO	Comprehension	NEW	

Development References

OP-MC-PSS-RN Page 49 (Rev 43)
Lesson Plan OP-MC-PSS-RN Page 95 (Rev 43)

Student References Provided

APE062 AK3.04 - Loss of Nuclear Service Water
Knowledge of the reasons for the following responses as they apply to the Loss of Nuclear Service Water: (CFR 41.4, 41.8 / 45.7)
Effect on the nuclear service water discharge flow header of a loss of CCW

401-9 Comments:

Remarks/Status

Chief Examiner approved use of reverse logic on this KA to be able to write an operationally valid question (i.e. the effect of a loss of RN on CCW) 02/19/10

401-9 Comments:

QUESTION 51 2551 B

The second part of A needs the word "train" after RN.

Resolution / Comments:

Corrected answer A per Lead Examiner's comment. See attached file for revised copy.

Question 51 References:

OP-MC-PSS-RN Obj: 8

OBJECTIVES

	OBJECTIVE	NLO	NLOR	LPRO	LPSO	LOR
8	Describe the RN System Flow path (suction source, essential and non-essential header alignment and discharge point) for the following:					
	• Normal operation	X	X	X	X	
	• Operation following a Blackout	X	X	X	X	X
	• Operation following a Safety Injection	X	X	X	X	X
9	Explain the reason for taking a suction on the low level intake.	X	X	X	X	
10	Concerning the RN essential and non-essential headers:					
	• List the loads supplied by each header	X	X	X	X	
	• Identify which loads are automatically supplied on a Blackout, Safety injection and/or Phase B.	X	X	X	X	X
11	Explain the reason for **NOT** isolating the auxiliary building non-essential header on a Blackout signal.	X	X	X	X	X
12	Describe the operation including any interlocks for the following valves: • RN42A (AB Non Ess Supply Isol) • RN171B (B D/G Supply Isol) • 1RN1 (Low Level Intake Isolation) • Engineering Safeguards Modulating Control Valves and Reset Circuitry	X	X	X	X	X
13	Describe the operational concerns when cycling RN valves that are shared between Unit 1 and Unit 2.			X	X	X
14	Given a parameter associated with the RN system, describe the indications for that parameter.	X	X	X	X	
15	Given a Limit and Precaution associated with the RN System, discuss its basis and when it applies.	X	X	X	X	X

From OP-MC-PSS-RN Page 49 (Rev 43)

3.2 Abnormal and Emergency Operation

3.2.1 Abnormal Procedure AP/1or2/A/5500/20

AP20 purpose, Cases, Symptoms, and basis for steps are covered in the AP Lesson Plan.

Objective # 16

3.2.2 Blackout Alignment

Blackout is a loss of power to the 4160 vac bus. When the low voltage condition is detected, the D/G will start and the sequencer will load the Blackout loads onto the bus. On receipt of a **Blackout signal**, Train A valves automatically assume low level alignment; Train B assumes SNSWP alignment. Many shared valves receive signals from both units to prevent loss of water from SNSWP. Isolation valves for all heat exchangers which are needed open automatically and the train related RN pump will start. All nonessential discharge is isolated except the containment vent units and NC pump motor cooler discharge. The containment vent units and the NC pump motor coolers are supplied with cooling water from "A" RN pump. The "A" RN pumps supply the containment ventilation units with cooling water because they have more NPSH since their suction is aligned to the LLI and because the RV pumps may not have power. **Drawings 7.10 and 7.11** provides the unit blackout flow path. **Drawings 7.12 and 7.13** provides the flow path for Train A and Train B Blackout respectively.

If a Blackout occurs on the opposite unit, the non-blackout unit will have its non-essential header isolated from the B RN pump as a result of RN41B and RN43A closing **(Refer to Drawing 7.5)**. In order to supply the non-essential header on the non-blackout unit, the A Train RN pump must be started.

From Lesson Plan OP-MC-PSS-RN Page 95 (Rev 43)

7.10, RN System Unit Blackout Flow Path (12/04/03)

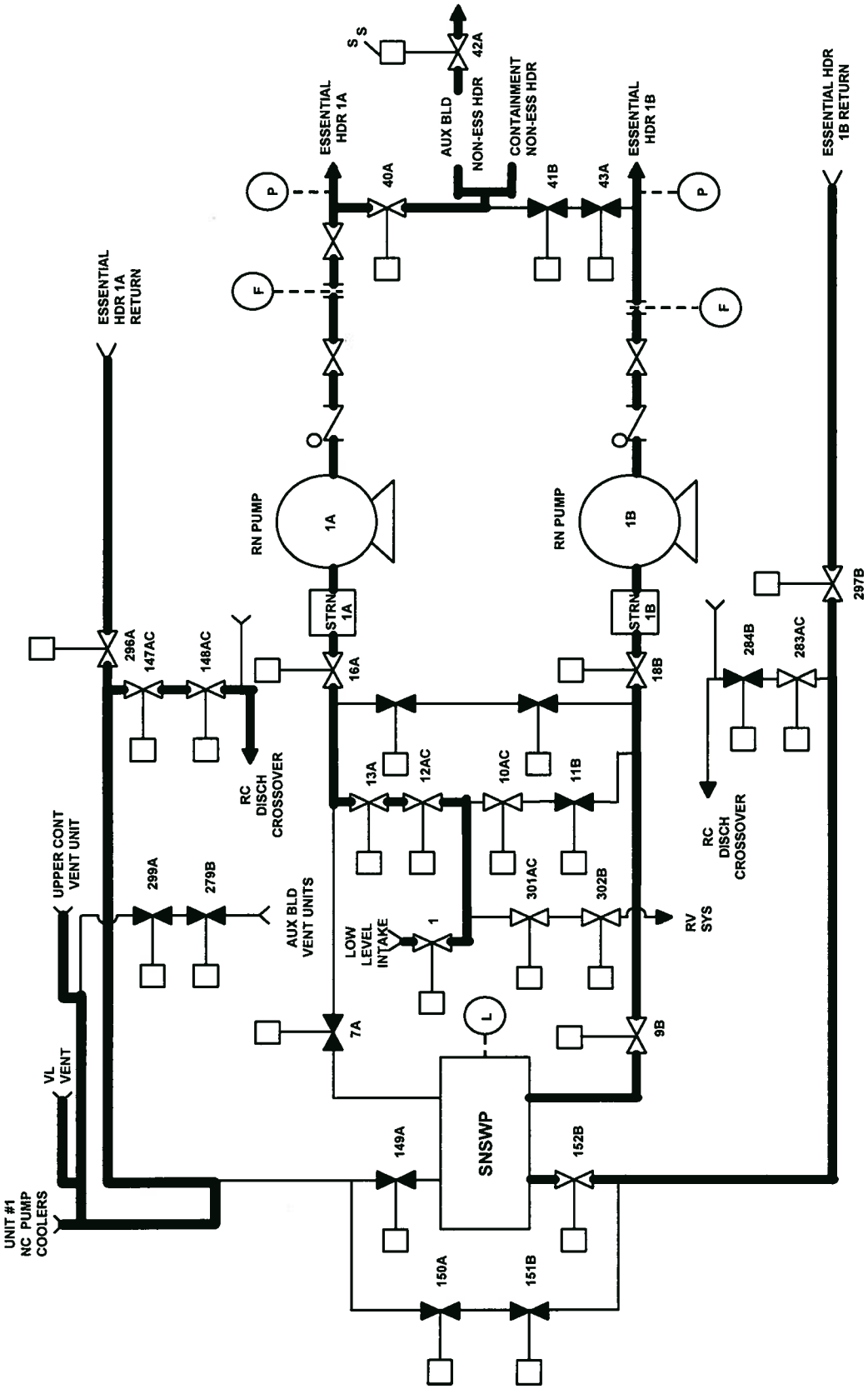

APE065 2.4.20 - Loss of Instrument Air
APE065 GENERIC
Knowledge of the operational implications of EOP warnings, cautions, and notes. (CFR: 41.10 / 43.5 / 45.13)

Given the following conditions on Unit 1:

- A loss of offsite power has occurred
- Both EDGs failed to start
- ECA-0.0 (Loss of All AC Power) has been implemented
- VI Header pressure is 20 PSIG

Based on the conditions above, CA flow may have to be controlled locally to prevent _____.

Which ONE (1) of the following completes the statement above?

A. SG overfill

B. CA pump runout

C. loss of heat sink

D. loss of shutdown margin

General Discussion

In ECA-0.0, VI header pressure is checked to be greater than 60 PSIG. If it is not, there is a CAUTION in the RNO for this step that states "Controlling CA flow in the following enclosure is time critical to prevent SG overfill and loss of the TD CA pump".

Answer A Discussion

CORRECT: See explanation above.

Answer B Discussion

INCORRECT: See explanation above.

PLAUSIBLE: This answer is plausible because the loss of VI results in the CA control valves failing open. It is reasonable for the applicant to conclude that this would result in a pump runout condition.

Answer C Discussion

INCORRECT: See explanation above.

PLAUSIBLE: This answer is plausible if the applicant concludes that the CA flow control valves fail closed on a loss of VI.

Answer D Discussion

INCORRECT: See explanation above.

PLAUSIBLE: This answer is plausible because the uncontrolled CA flow will cause a cooldown and it is reasonable for the applicant to conclude that the cooldown could result in enough of a positive reactivity addition to cause a loss of shutdown margin.

Basis for meeting the KA

KA is matched because the applicant must be familiar with the CAUTION in the RNO for checking VI header pressure greater than 60 PSIG and why it is a concern during ECA-0.0.

Basis for Hi Cog

Basis for SRO only

Job Level	Cognitive Level	QuestionType	Question Source
RO	Memory	NEW	

Development References

Learning Objective:
1) EPECA004

References:
1) ECA-0.0

Student References Provided

APE065 2.4.20 - Loss of Instrument Air
APE065 GENERIC
Knowledge of the operational implications of EOP warnings, cautions, and notes. (CFR: 41.10 / 43.5 / 45.13)

401-9 Comments:

Remarks/Status

401-9 Comments:

C is NP as written. PTS is way too a significant event for the initial conditions. Consider changing to C to "CA pump run out"

Resolution / Comments:

Developed revised question per Lead Examiner's recommendation. Rearranged distracters for psychometrics. Distracter analysis will need work if revised question is acceptable. See attached file for revised copy of question.

Question 52 References:

From ECA-0.0:

MNS EP/2/A/5000/ECA-0.0 UNIT 2	LOSS OF ALL AC POWER	PAGE NO. 7 of 171 Rev. 31

ACTION/EXPECTED RESPONSE	RESPONSE NOT OBTAINED
10. **Control intact S/G levels as follows:**	
__ a. Check N/R level in any intact S/G - GREATER THAN 11% (32% ACC).	__ a. Maintain maximum CA flow until N/R level in at least one intact S/G is greater than 11% (32% ACC).
__ b. Check VI header pressure - GREATER THAN 60 PSIG.	b. Perform the following:
	CAUTION **Controlling CA flow in the following enclosure is time critical to prevent S/G overfill and loss of TD CA pump.**
	__ 1) **IF** CA flow cannot be throttled with CA control valves in subsequent steps, **THEN** control flow **PER** EP/2/A/5000/G-1 (Generic Enclosures), Enclosure 16 (CA Flow Control With Loss of VI).

APE077 AK2.03 - Generator Voltage and Electric Grid Disturbances

nowledge of the interrelations between Generator Voltage and Electric Grid Disturbances and the following: (CFR: 41.4, 41.5, 41.7, 41.10 / 5.8)

Sensors, detectors, indicators.....

Unit 1 & 2 are operating at 100% RTP:

- The TCC has notified the Control Room that the "Real Time Contingency Analysis" (RTCA) indicates that switchyard voltage would NOT be adequate should a Unit Trip occur
- The CR Supervisors implement AP/1/A/5500/05 and AP/2/A/5500/05, Generator Voltage and Electric Grid Disturbances
- The OAC is not in service
- Unit 1 Main Generator Voltage is 23.8 KV
- Unit 2 Main Generator Voltage is 24.2 KV
- Unit 1 & 2 Main Generator MW's are 1200
- Unit 1 Main Generator MVAR's are 450
- Unit 2 Main Generator MVAR's are 475
- H_2 pressure on both generators is 75 PSIG

Which ONE (1) of the following actions is required to be taken by the Unit 1 & 2 crews?

REFERENCE PROVIDED

A. Depress "RAISE" on the "VOLTAGE ADJUST" for Unit 1 ONLY.

B. Depress "RAISE" on the "VOLTAGE ADJUST" for Unit 2 ONLY.

C. Depress "LOWER" on the "VOLTAGE ADJUST" for Unit 1 ONLY.

D. Depress "LOWER" on the "VOLTAGE ADJUST" for Unit 2 ONLY.

General Discussion

For Unit 1, the 95 PERCENT (22.8kV) capability curve is used and it is determined that 450 MVAR is outside the limits of the curve which requires the VOLTAGE ADJUST to be lowered to reduce the lagging MVAR's.

For Unit 2, the 100 PERCENT (24kV) capability curve is used and it is determined that 475 MVAR is within the limits of the curve. Therefore, MVAR's do NOT need to be adjusted on Unit 2.

Answer A Discussion

INCORRECT: See explanation above.

PLAUSIBLE: This answer is plausible if the applicant chooses the wrong capability curve to read or misreads the correct curve and does not understand how the operation of the VOLTAGE ADJUST affects unit MVARS.

Answer B Discussion

INCORRECT: See explanation above.

PLAUSIBLE: This answer is plausible if the applicant chooses the wrong capability curve to read or misreads the correct curve and does not understand how the operation of the VOLTAGE ADJUST affects unit MVARS.

Answer C Discussion

CORRECT: See explanation above.

Answer D Discussion

INCORRECT: See explanation above.

PLAUSIBLE: This answer is plausible if the applicant chooses the wrong capability curve to read or misreads the correct curve.

Basis for meeting the KA

KA is matched because a Grid Disturbance has occurred and the applicant must use the "indications" provided to determine the impact on Main Generator operation.

Basis for Hi Cog

This is a higher cognitive level question. First the applicant must use the indications provided to determine which capability curve to use. The applicant must then determine if each of the generators is operating within the limits of their respective capability curves. The applicant must then chose the appropriate action based on whether the unit is operating within the limits of the curve. Since this question requires multiple mental steps, it is a higher cognitive level question.

Basis for SRO only

Job Level	Cognitive Level	QuestionType	Question Source
RO	Comprehension	BANK	MNS Exam Bank Question #AP05012

Development References

Learning Objectives:
1) N/A

References:
1) AP/1/A/5500/05 and AP/2/A/5500/05 Generator Voltage and Electric Grid Disturbances

Student References Provided

Unit 1 & 2 Generator Capability Curves

APE077 AK2.03 - Generator Voltage and Electric Grid Disturbances

Knowledge of the interrelations between Generator Voltage and Electric Grid Disturbances and the following: (CFR: 41.4, 41.5, 41.7, 41.10 / 45.8)

Sensors, detectors, indicators.....

401-9 Comments:

Remarks/Status

401-9 Comments:

The stem requires an action. Distractor A is NOT an action and therefore is NP. Consider using "raise" for A and B in some

fashion.

Resolution / Comments:

Revised answers A and B to include "raise". Added "if any" to stem. See attached copy of revised question.

Question 53 Parent Question:

From AP/1/A/5500/05:

MNS AP/1/A/5500/05 UNIT 1	GENERATOR VOLTAGE AND ELECTRIC GRID DISTURBANCES	PAGE NO. 5 of 30 Rev. 007

ACTION/EXPECTED RESPONSE	RESPONSE NOT OBTAINED
7. **Monitor Generator Capability Curve as follows:**	
NOTE In the following step, if Generator voltage is fluctuating above and below 24 KV, then assume voltage is less than 24 KV.	
__ a. Check Generator voltage - LESS THAN 24 KV.	a. Perform the following: __ 1) Monitor Generator Capability Curve **PER** Enclosure 1 (Generator Capability Curve - 24 KV). __ 2) **GO TO** Step 8.
__ b. Check OAC - IN SERVICE.	b. Perform the following: __ 1) Monitor Generator Capability Curve **PER** Enclosure 2 (Generator Capability Curve - 22.8 KV). __ 2) **GO TO** Step 8.
__ c. Monitor Generator Capability Curve **PER** OAC turn on code "GENCAP".	
__ 8. **Check Generator MVARs - WITHIN LIMITS OF GENERATOR CAPABILITY CURVE.**	__ **GO TO Step 11.**
__ 9. **IF AT ANY TIME capability curve exceeded, THEN perform Steps 11 and 12.**	
__ 10. **GO TO Step 13.**	

ACTION/EXPECTED RESPONSE	RESPONSE NOT OBTAINED
11. **Adjust MVARs to within the capability curve by performing one of the following:** __ • Depress "LOWER" on the "VOLTAGE ADJUST" to reduce lagging MVARs OR __ • Depress "RAISE" on the "VOLTAGE ADJUST" to reduce leading MVARs.	
__ 12. **Check Generator MVARs - WITHIN LIMITS OF GENERATOR CAPABILITY CURVE.**	**IF actions in Step 11 do not restore MVARs, THEN perform the following:** a. IF voltage regulator in "AUTO", **THEN** perform the following: __ 1) Place voltage regulator in "MAN". __ 2) Adjust MVARs to within the capability curve. b. IF unable to maintain MVARs within curve, **THEN** remove generator from service as follows: 1) IF greater than P-8, **THEN** perform the following: __ a) Trip reactor. __ b) **GO TO** EP/1/A/5000/E-0 (Reactor Trip or Safety Injection). 2) IF less than P-8, **THEN** perform the following: __ a) Trip turbine. __ b) **GO TO** AP/1/A/5500/02 (Turbine Generator Trip).

From AP/2/A/5500/05:

7. **Monitor Generator Capability Curve as follows:**

NOTE In the following step, if Generator voltage is fluctuating above and below 24 KV, then assume voltage is less than 24 KV.

__ a. Check Generator voltage - LESS THAN 24 KV.

a. Perform the following:

__ 1) Monitor Generator Capability Curve **PER** Enclosure 1 (Generator Capability Curve - 24 KV).

__ 2) **GO TO** Step 8.

__ b. Check OAC - IN SERVICE.

b. Perform the following:

__ 1) Monitor Generator Capability Curve **PER** Enclosure 2 (Generator Capability Curve - 22.8 KV).

__ 2) **GO TO** Step 8.

__ c. Monitor Generator Capability Curve **PER** OAC turn on code "GENCAP".

__ 8. **Check Generator MVARs - WITHIN LIMITS OF GENERATOR CAPABILITY CURVE.**

__ **GO TO** Step 11.

__ 9. **IF AT ANY TIME capability curve exceeded, THEN perform Steps 11 and 12.**

__ 10. **GO TO** Step 13.

SIEMENS POWER GENERATION
CALCULATED CAPABILITY CURVE
AT 100 PERCENT VOLTAGE (24kV)
HYDROGEN INNER-COOLED TURBINE GENERATOR
WITH WATER COOLED STATOR
1330MVA, 0.83PF, 46C COLD GAS

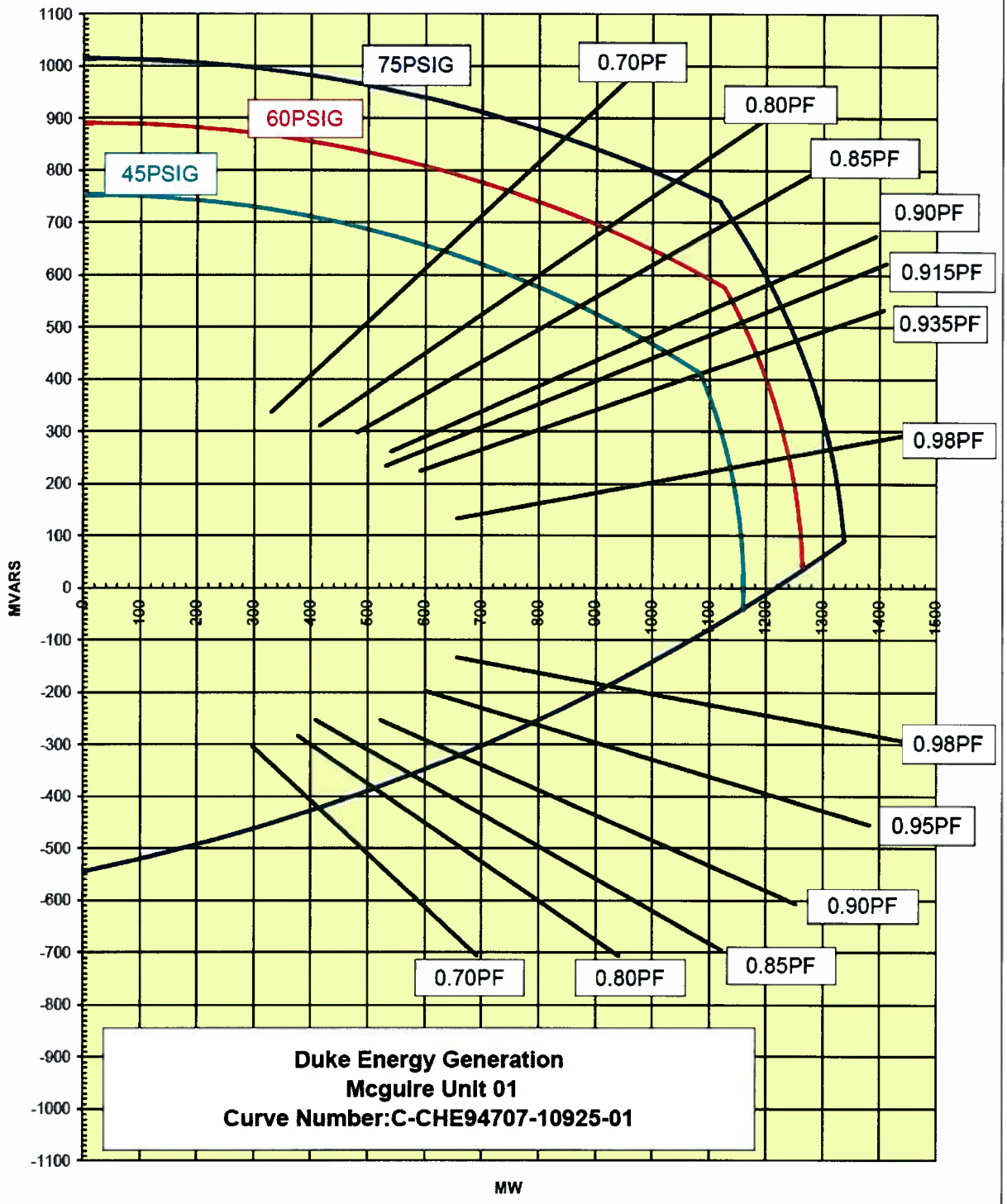

SIEMENS POWER GENERATION
CALCULATED CAPABILITY CURVE
AT 95 PERCENT VOLTAGE (22.8kV)
HYDROGEN INNER-COOLED TURBINE GENERATOR
WITH WATER COOLED STATOR
1264MVA, 0.76PF, 46C COLD GAS

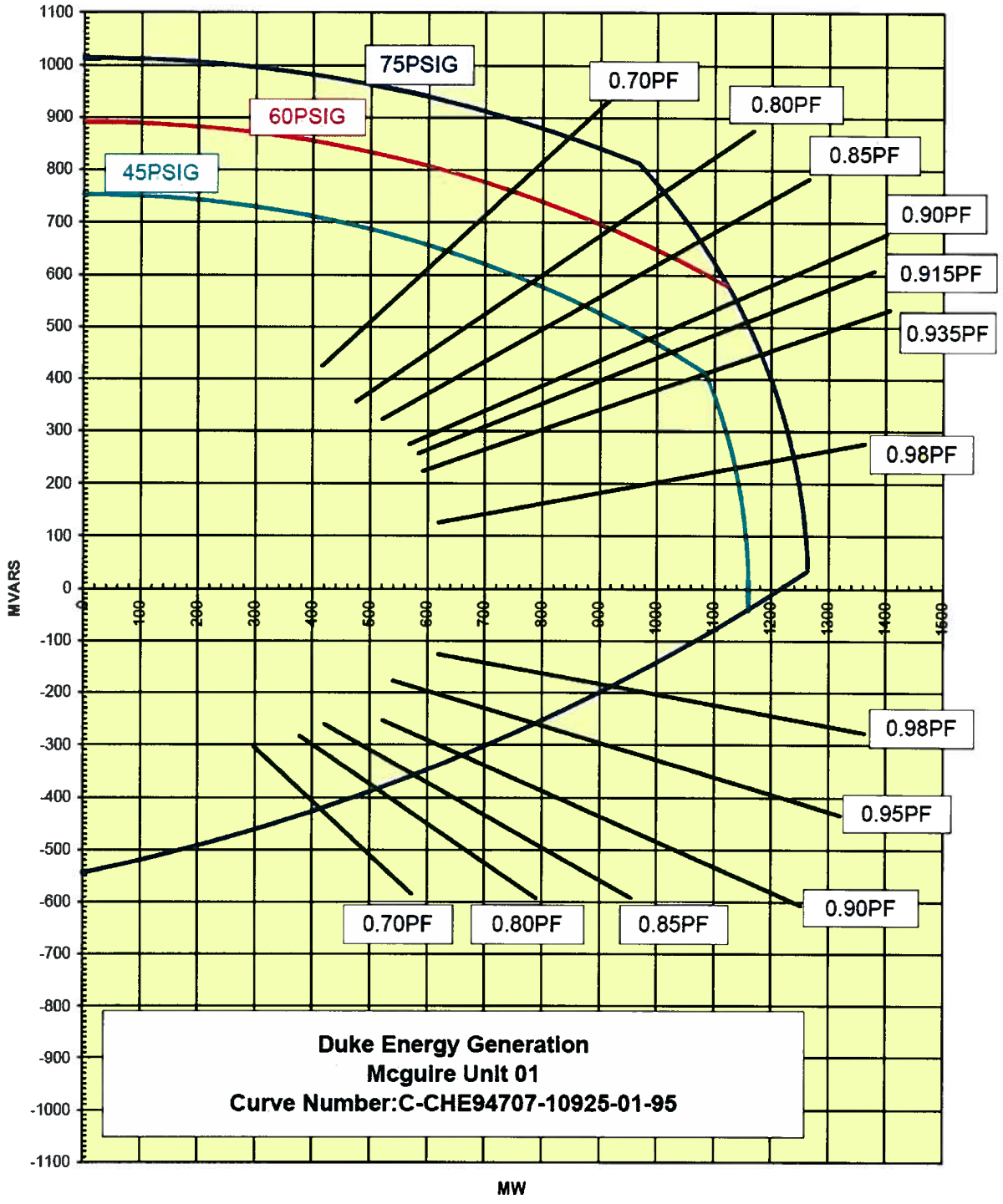

Duke Energy Generation
Mcguire Unit 01
Curve Number:C-CHE94707-10925-01-95

SIEMENS POWER GENERATION
CALCULATED CAPABILITY CURVE
AT 100 PERCENT VOLTAGE (24kV)
HYDROGEN INNER-COOLED TURBINE GENERATOR
WITH WATER COOLED STATOR
1380MVA, 0.87PF, 46C COLD GAS

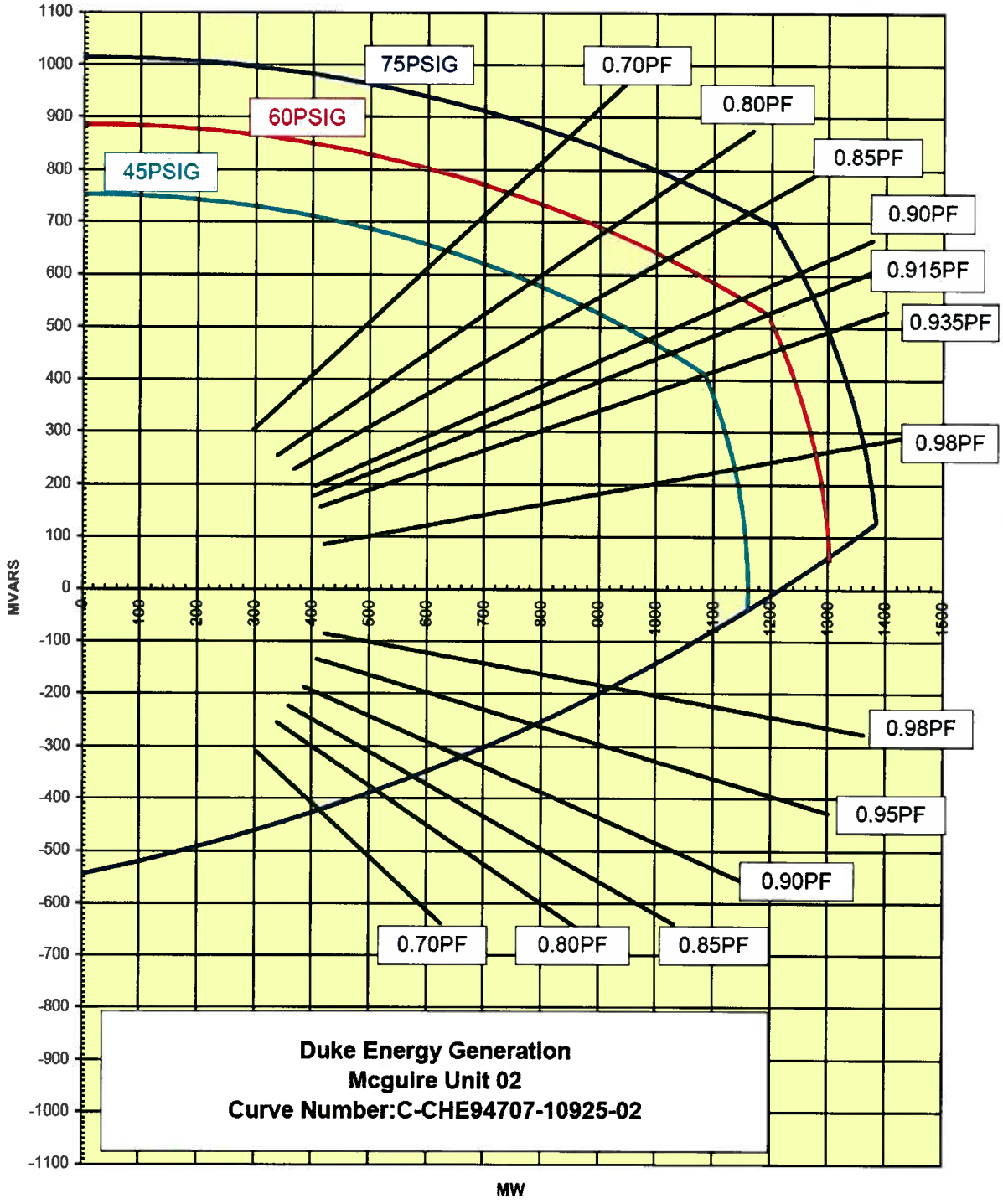

Duke Energy Generation
Mcguire Unit 02
Curve Number:C-CHE94707-10925-02

SIEMENS POWER GENERATION
CALCULATED CAPABILITY CURVE
AT 95 PERCENT VOLTAGE (22.8kV)
HYDROGEN INNER-COOLED TURBINE GENERATOR
WITH WATER COOLED STATOR
1311MVA, 0.81PF, 46C COLD GAS

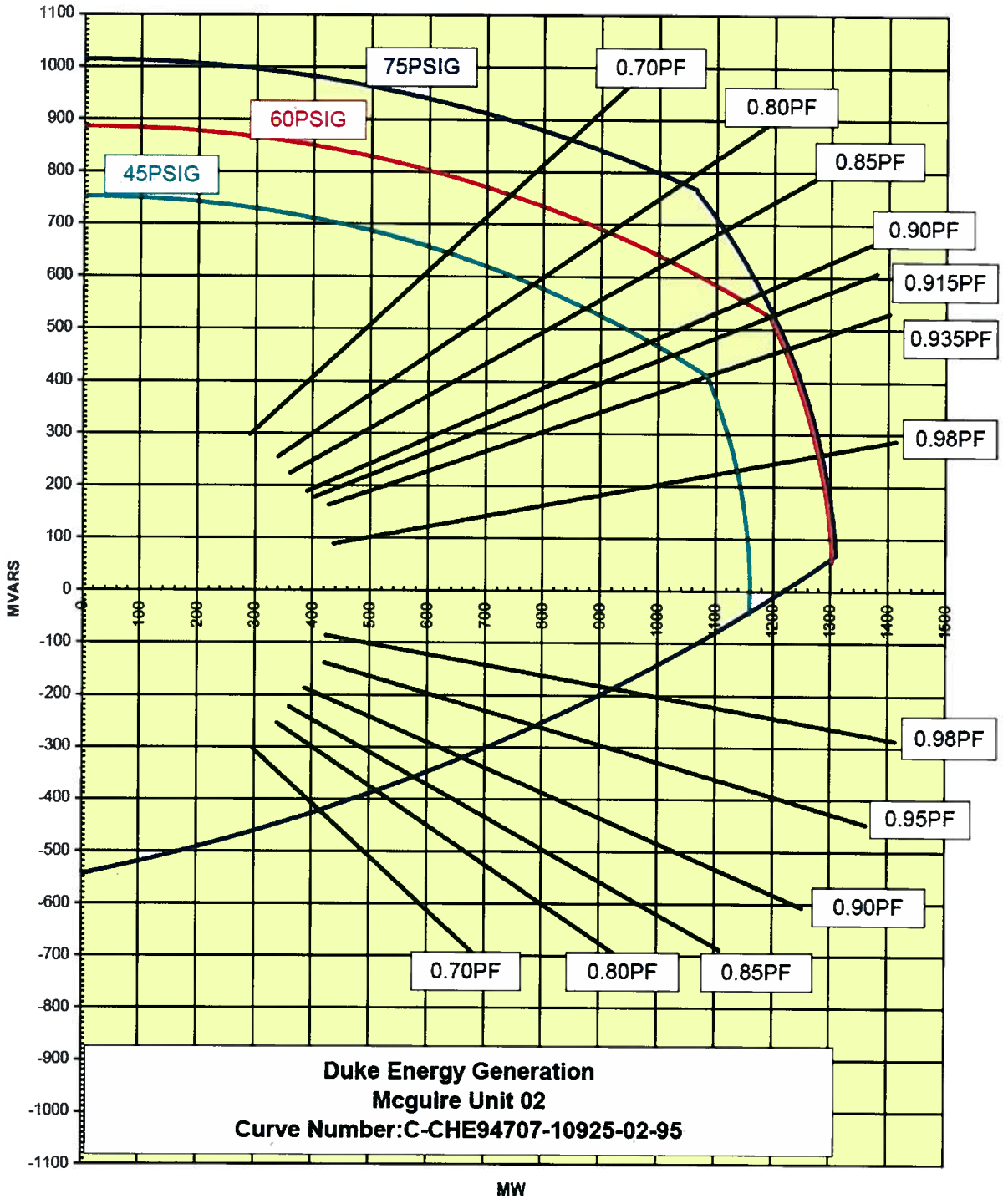

Duke Energy Generation
Mcguire Unit 02
Curve Number:C-CHE94707-10925-02-95

McGuire Nuclear Station
Generator Capability Curve Application Guidance

1 22.8kV Capability Curve (Curve 3.1.1 of Enclosure 4.3) to be used when generator output voltage is between 22.8kV and 24.0 kV.

2 24.0kV Capability Curve (Curve 3.1.2 of Enclosure 4.3) to be used when generator output voltage is 24.0 kV or higher.

NOTE: MVAR limits provided in Enclosure 4.3 are based upon Full Power (1200 MWs) operation. At reduced power MVAR limits should be obtained from generator capability curves. Actual MVAR limits are based upon operating generator voltage, H2 pressure, MW output, etc.

3 When generator MVARs exceed capability curve, refer to AP / 1 / A / 5500 / 005 (Generator Voltage and Electric Grid Disturbances)

Question 53 Parent Question:

AP050121 pt

Unit 1 & 2 are operating at 100% RTP:

- The TCC has notified the Control Room that the "Real Time Contingency Analysis" (RTCA) indicates that switchyard voltage would not be adequate should a Unit Trip occur.
- The CR Supervisors implement AP/1/A/5500/005 and AP/2/A/5500/005, Generator Voltage and Electric Grid Disturbances.
- Enclosure 1 (Abnormal Generator or Grid Voltage) is implemented.
- Step 1 of Enclosure 1 directs the operators to "Check Generator - TIED TO GRID"
- Unit 1 Main Generator Voltage is 24.2 KV
- Unit 2 Main Generator Voltage is 23.9 KV
- Unit 1 & 2 Main Generator MW's are 1200
- Unit 1 Main Generator MVAR's are 475
- Unit 2 Main Generator MVAR's are 450

Which one of the following actions are required to be taken by the Unit 1 & 2 crews?

A. Monitor Unit 1 & 2 MVAR's and continue with the procedure

B. Place the voltage Regulator in Manual and adjust MVAR's on both units

C. Place the voltage Regulator in Manual and adjust MVAR's on Unit 1 only

D. Place the voltage Regulator in Manual and adjust MVAR's on Unit 2 only

Answer 576
D

WE04 EK1.3 - LOCA Outside Containment

Knowledge of the operational implications of the following concepts as they apply to the (LOCA Outside Containment)

(CFR: 41.8 / 41.10, 45.3)

Annunciators and conditions indicating signals, and remedial actions associated with the (LOCA Outside Containment).

Given the following conditions on Unit 1:

- A Reactor Trip and SI have occurred due to low Pressurizer pressure
- Crew is performing the actions of E-0 (Reactor Trip or SI)
- SI termination criteria cannot be met at this time
- Containment parameters are normal
- Both ND pumps are tripped
- FWST level indicates 340 inches
- 1EMF-1 (ND Area Monitor) is in Trip 2 at 1.5E2 mREM/hr
- 1EMF-41 (Aux Bldg Ventilation) is in Trip 2 alarm

Based on the above indications, the crew will transition to __(1)__ and the strategy implemented to mitigate this event is __(2)__.

Which ONE (1) of the following completes the statement above?

A. 1. ECA-1.1 (Loss of Emergency Coolant Recirculation)
   2. to identify and isolate the break

B. 1. ECA-1.1 (Loss of Emergency Coolant Recirculation)
   2. to delay depletion of the FWST by reducing outflow and initiating makeup

C. 1. ECA-1.2 (LOCA Outside Containment)
   2. to identify and isolate the break

D. 1. ECA-1.2 (LOCA Outside Containment)
   2. to delay depletion of the FWST by reducing outflow and initiating makeup

---

General Discussion

In the scenario described in the stem of this question, the applicant is presented with a set of indications which would require a transition directly from E-0 to ECS 1.2. This transition would be based on the fact that SI termination cannot be met, FWST inventory is being depleted and there are multiple indications of elevated radiation levels in the Aux building with containment conditions normal. Step 39 of E-0 would direct this transition.
The strategy employed by ECA 1.2 (LOCA Outside Containment) is to identify and isolate the leak.

Answer A Discussion

INCORRECT: See explanation above.

PLAUSIBLE: Part 1 is plausible because the applicant is presented with conditions which meet the entry criteria for ECA -1.1 (Loss of ECR). FWST inventory is being depleted without a corresponding increase in containment sump level. This would be a correct answer if a transition were not being made directly from E-0.

Part 2 plausible because ECA 1.1 contains actions to reduce the loss of inventory and initiate make up to restore FWST level. It is plausible the applicant would misinterpret the actions to identify and isolate the break as one of those action because it would reduce the loss of inventory.

Answer B Discussion

INCORRECT: See explanation above.

PLAUSIBLE: Part 1 is plausible because the applicant is presented with conditions which meet the entry criteria for ECA -1.1 (Loss of ECR). FWST inventory is being depleted without a corresponding increase in containment sump level. This would be a correct answer if a transition were not being made directly from E-0.

Part 2 is correct strategy for the procedure given in this distracter and therefore plausible.

Answer C Discussion

CORRECT: See explanation above.

Answer D Discussion

INCORRECT: See explanation above.

PLAUSIBLE: Part 1 is correct and therefore plausible.

Part 2 is plausible because actions contained in ECA 1.2, if successful would delay depletion of the FWST by reducing out flow.

Basis for meeting the KA

KA is matched because the applicant must evaluate annunciators and indications associated with implementation ECA-1.2 (LOCA Outside Containment). The operational implication of the given indications would be the transition to the procedure. He must then identify the remedial actions associated with performing ECA-1. 2.

Basis for Hi Cog

This question is Hi Cog because the applicant must evaluate a given set of conditions and through a multipart mental process, solve a problem by selecting the correct procedure and identifying the correct strategy associated with that transition.

Basis for SRO only

Job Level	Cognitive Level	QuestionType	Question Source
RO	Comprehension	NEW	

Development References

Learing Objective:
1) EP-E1 #4
E-1 Lssson Plan

ECA 1.2 (LOCA Outside Containment)

Student References Provided

WE04 EK1.3 - LOCA Outside Containment
Knowledge of the operational implications of the following concepts as they apply to the (LOCA Outside Containment)
(CFR: 41.8 / 41.10, 45.3)
Annunciators and conditions indicating signals, and remedial actions associated with the (LOCA Outside Containment).

01-9 Comments:

Remarks/Status
401-9 Comments: The stem requires an action to mitigate the event. Delaying depletion of the FWST is not an action to mitigate a LOCA outside containment event. Isolating the break is ALWAYS a good thing. Distractors B2 and D2 are NP. Replace these 2 distractors. This Q is U because of 2 NP distractors. ---------- Resolution / Comments: Added Both ND pumps are tripped to stem of question to give plausibility to "A" and "B". Replaced "should" with "must" in the stem of the question per Lead Examiner's General Comments.

Question 54 References:

From Lesson E.0:

MNS EP/1/A/5000/E-0 UNIT 1	REACTOR TRIP OR SAFETY INJECTION	PAGE NO. 28 of 37 Rev. 29

39. **Check for potential leak in aux bldg:**

a. Check aux bldg radiation:

__ ☐ All area monitor EMFs - NORMAL

__ ☐ EMF-41 (Aux Bldg Ventilation) - NORMAL

a. Perform the following:

1) Determine location of activity using any of the following:

__ ☐ EMF alarms on OAC (turn on code "EMF")

__ ☐ EMF-41 sample points reading the highest on OAC (turn on code "EMF-41")

__ ☐ Area monitor EMF alarms.

__ 2) Dispatch operator to locate and isolate potential Unit 1 leak.

__ 3) IF cause of alarm is LOCA outside containment, THEN GO TO EP/1/A/5000/ECA-1.2 (LOCA Outside Containment).

NOTE The following step is checking for a significant NC leak into the ND System.

b. Check NC to ND pressure boundary intact as follows:

__ ☐ ND Temperature - NORMAL

__ ☐ ND Flow - NORMAL

__ ☐ ND Pressure - NORMAL.

__ b. IF ND System parameters indicate LOCA outside containment, THEN GO TO EP/1/A/5000/ECA-1.2 (LOCA Outside Containment).

From E-1 Lesson Plan (Page 191):

1.0 ECA-1.1, LOSS OF EMERGENCY COOLANT RECIRCULATION

1.1. Purpose

This procedure provides instruction for when emergency coolant recirculation (ECR) capability is lost. Loss of ECR is defined as the loss of the ability to provide the recirculation function following a LOCA, i.e., the loss of the ability to inject fluid from the sump to the NC using a ND pump.

The objective of the loss of ECR procedure is threefold:

1) To continue attempts to restore emergency coolant recirculation capability,
2) To delay depletion of the FWST by adding makeup fluid and reducing outflow, and
3) To depressurize the NC to minimize break flow and cause S/I accumulator injection.

From E-1 Lesson Plan (Page 191):

2.0 ECA-1.2, LOCA OUTSIDE CONTAINMENT

2.1. Purpose

This procedure provides guidance for a LOCA that occurs outside containment. Specifically, the objective of this procedure is to provide actions to identify and isolate a LOCA outside containment.

This entire EP is a significant deviation from the ERGs. Isolating an ISLOCA into the ND system is considered PRA significant operator action as described in PIP M02-247. The valves used to do this isolation (NI-173A/178B) are not designed to close against the DP that could be seen during an ISLOCA, since this is a beyond design basis event. To meet the intent of this EP to isolate a break on low pressure ND system piping, this EP includes actions to cooldown and depressurize the NC system to the point where the isolation valves are capable of closing.

2.2. Symptoms/Entry Conditions

ECA-1.2 is entered when either of the following conditions occur:

1. In E-0, when abnormal radiation occurs in the Aux Building due to a loss of NC system inventory outside containment.
2. When it is determined in E-1 that the cause of abnormal radiation is due to a loss of NC inventory outside containment.

C

WE05 EK3.2 - Loss of Secondary Heat Sink

nowledge of the reasons for the following responses as they apply to the (Loss of Secondary Heat Sink)

CFR: 41.5 / 41.10, 45.6, 45.13)

Normal, abnormal and emergency operating procedures associated with (Loss of Secondary Heat Sink).

Given the following conditions on Unit 1:

- A medium-break LOCA occurred in Containment
- Containment pressure peaked at 2.7 PSIG and is slowly decreasing
- The crew has implemented FR-H.1 (Response to Loss of Secondary Heat Sink)
- All attempts to restore flow to the S/Gs from the CA system have been unsuccessful

1. Based on these conditions, the NC pumps must be stopped to _____.

2. The EARLIEST time (based on S/G conditions) that the crew is required to establish NC system bleed and feed is when W/R level in at least 3 S/Gs is less than _____.

Which ONE (1) of the following completes the statements above?

A. 1. prevent NC pump impeller damage due to low pressure operation
   2. 24%

B. 1. prevent NC pump impeller damage due to low pressure operation
   2. 36%

C. 1. conserve secondary inventory by reducing NC system heat input
   2. 24%

D. 1. conserve secondary inventory by reducing NC system heat input
   2. 36%

General Discussion

Per FR-H.1 Basis Document the basis for Step 9 states:

STEP 9 Stop all NC pumps.

PURPOSE: To stop NC pumps in order to extend the time to restore feed flow to the S/Gs.

BASIS: NC pump operation results in heat addition to the water in the NC system. By tripping the NC pumps, the effectiveness of the remaining water inventory in the S/Gs is extended, which extends the time at which the operator action to initiate feed and bleed must occur. This extension of time is additional time for the operator to restore feedwater flow to the S/Gs.

Per FR-H.1, if WR Level in at least 3 SGs is less than 24% (36% ACC), Feed and Bleed of the NC system is initiated.

Answer A Discussion

INCORRECT: See explanation above.

PLAUSIBLE: Part 1 is plausible because it is reasonable for the applicant to conclude that during a LOCA the reduction in NC system subcooling and potential voiding in the NC system could result in a scenario where NC pump cavitation could occur.

Part 2 is correct.

Answer B Discussion

INCORRECT: See explanation above.

PLAUSIBLE: Part 1 is plausible because it is reasonable for the applicant to conclude that during a LOCA the reduction in NC system subcooling and potential voiding in the NC system could result in a scenario where NC pump cavitation could occur.

rt 2 is plausible because this is this is the adverse containment condition value for initiating feed and bleed. However, adverse condition quirements have not been met.

Answer C Discussion

CORRECT: See explanation above.

Answer D Discussion

INCORRECT: See explanation above.

PLAUSIBLE: Part 1 is correct.

Part 2 is plausible because this is this is the adverse containment condition value for initiating feed and bleed. However, adverse condition requirements have not been met.

Basis for meeting the KA

KA is matched because the applicant must demonstrate a knowledge of the emergency operating procedure associated with Loss of Secondary Heat Sink (FR-H.1) with regards to the mitigative strategy in the procedure and the basis for performing major actions in the procedure.

Basis for Hi Cog

Basis for SRO only

Job Level	Cognitive Level	QuestionType	Question Source
RO	Memory	BANK	Neve AUDIT Q0 (Bank 1028)

Development References

arning Objective:
, EP-FRH Objective 4

References:
1) EP-FR-H.1 Loss of Secondary Heat Sink
2) FR-H.1 Background Document

Student References Provided

2010 MNS SRO NRC Examination QUESTION 55

2555

C

3) WOG Background Document for FR-H.1

E05 EK3.2 - Loss of Secondary Heat Sink

Knowledge of the reasons for the following responses as they apply to the (Loss of Secondary Heat Sink)
(CFR: 41.5 / 41.10, 45.6, 45.13)

Normal, abnormal and emergency operating procedures associated with (Loss of Secondary Heat Sink).

401-9 Comments:

Remarks/Status
401-9 Comments: A1 and B1 are borderline NP because seal leak off is so insignificant with respect to a LOCA unless the seal is blown. Consider changing both to "prevent NC pump impeller damage to low pressure operations" or something equivalent. This Q is U because of 2 NP distractors. ---------- Resolution / Comments: Revised per Lead Examiner's recommendation. Revised distracter analysis to match new answers "A" and "B". See attached file for proposed revision.

Question 55 References:

From Lesson Plan OP-MC-EP-FRH :

STEP 8 Check steam dumps:

PURPOSE: Place steam dumps in pressure mode of control before stopping all NC pumps.

BASIS: Provide better control of steam dumps under natural circ conditions. If no NC pump is running, then the NC system average temperature will be higher than the no-load value as natural circulation conditions are established. However, if the steam dump system is working properly, the cold leg temperatures will stabilize at the no-load value.

STEP 9 Stop all NC pumps.

PURPOSE: To stop NC pumps in order to extend the time to restore feed flow to the S/Gs.

BASIS: NC pump operation results in heat addition to the water in the NC system. By tripping the NC pumps, the effectiveness of the remaining water inventory in the S/Gs is extended, which extends the time at which the operator action to initiate feed and bleed must occur. This extension of time is additional time for the operator to restore feedwater flow to the S/Gs.

From WOG Background Document for FR-H.1:

2.5 Reactor Coolant Pump Operation

Operation of reactor coolant pumps will affect the dryout time of the steam generators due to RCP heat addition and, therefore, will affect the time at which operator action to initiate bleed and feed must occur.

Studies have been performed using the LOFTRAN code (Reference 2) to assess the impact of RCP operation on the time PORVs will open without operator action and the time to steam generator dryout for a loss of main feedwater event without

AFW available. A four-loop plant typical of current Westinghouse design was used. It had a core power of 3411 Mwt and an RCP steady state power of 14 Mwt. Model F steam generators were also assumed. Thus, while this plant is not identical to the one used in References 1, 3 and 4, the study will be representative of Westinghouse plant response and sufficient to determine the impact of RCP status on the time available before operator action to initiate bleed and feed is required.

The cases analyzed were:

Case 1: RCPs running throughout transient

Case 2: RCPs tripped at reactor trip

Case 3: RCPs tripped 5 minutes after reactor trip

The focus of the analysis was to determine the additional time available to the operator as a result of eliminating RCP heat from the system before action to initiate bleed and feed became necessary. Thus, the time of two events was used to determine the impact of RCP trip time. The two events are 1) the time when PORVs automatically open as a result of the degraded heat transfer capability of the steam generator and 2) the time when steam generator secondaries dry out.

Table 1 shows a comparison of the three cases. Case 1 represents a situation where steam generators would experience the earliest dryout due to the RCP heat load and Case 2 is where the steam generators would experience the latest dryout. The extension in dryout time from Case 1 to Case 2 is between 7

and 9 minutes, depending upon the indication of dryout that is chosen. The use of the time to PORV opening will have some uncertainty due to the uncertainty in predicting non-equilibrium effects in the pressurizer. However, PORV opening time is probably the best indicator obtainable from the LOFTRAN analysis of the time available until bleed and feed must be initiated.

Case 3, where the RCPs are tripped 5 minutes after reactor trip, is a best estimate expectation of when the operator can be expected to trip RCPs following a reactor trip based on guidance provided in this guideline. Thus, the extension in time to loss of heat sink symptoms is the most realistic that

could be expected based on anticipated operator response. The extension to loss of secondary heat sink symptoms is about 5 minutes based on PORV opening time. This compares favorably with the extension already seen between Cases 1 and 2. Thus, operator action to trip RCPs upon entering this guideline for loss of secondary heat sink can appreciably delay the need for bleed and feed and the loss of secondary heat sink. Thus, time can be gained for the operator to establish a means of supplying feedwater.

Delaying the loss of secondary heat sink is not the only reason for tripping RCPs. RCPs running can also reduce the effectiveness of bleed and feed. RCP heat input to the RCS will result in increased steam generation hindering the depressurization of the RCS during bleed and feed. The higher pressure produced by RCP operation will reduce SI flow and increase inventory lost through the PORVs. Therefore, RCPs should be tripped if AFW flow cannot be established immediately after entering this guideline.

From FR-H.1:

ACTION/EXPECTED RESPONSE	RESPONSE NOT OBTAINED
4. **Check at least one of the following NV pumps - AVAILABLE:**	__ **GO TO Step 20.**
__ • 1A NV pump OR __ • 1B NV pump.	
5. **Check if NC System feed and bleed should be initiated:**	
__ a. Check W/R level in at least 3 S/Gs - LESS THAN 24% (36% ACC)	a. Perform the following: __ 1) Monitor feed and bleed initiation criteria. __ 2) **WHEN** criteria satisfied, **THEN GO TO** Step 20. __ 3) **GO TO** Step 6.
__ b. **GO TO** Step 20.	
__ 6. **Ensure S/G BB and NM valves CLOSED PER Enclosure 3 (S/G BB and Sampling Valve Checklist).**	
7. **Attempt to establish CA flow to at least one S/G as follows:**	
__ a. Check power to both MD CA pumps - AVAILABLE.	a. Perform the following. __ • **IF** 1ETA **OR** 1ETB deenergized, **THEN** restore power to the affected essential bus **PER** AP/1/A/5500/07 (Loss of Electrical Power). __ • **IF** the essential bus is energized, **THEN** dispatch operator to determine cause of breaker failure.
__ b. Ensure control room CA valves aligned **PER** Enclosure 4 (CA Valve Alignment).	
__ c. Start all available CA pumps.	

ACTION/EXPECTED RESPONSE	RESPONSE NOT OBTAINED
19. **Check if NC System feed and bleed should be initiated:**	
__ a. Check feed and bleed - HAS BEEN PREVIOUSLY ESTABLISHED PER STEPS 21 through 25.	__ a. GO TO Step 19.c.
__ b. GO TO Step 36.	
__ c. Check W/R level in at least 3 S/Gs - LESS THAN 24% (36% ACC).	__ c. **RETURN TO** Step 1.
__ 20. **Perform Steps 21 through 25 quickly to establish NC heat removal by NC feed and bleed.**	
__ 21. **Ensure all NC pumps - OFF.**	
__ 22. **Initiate S/I.**	

Parent Question (Bank Question 1028):

Unit 2 was operating at 100% power. Given the following:

- A medium break LOCA occurred in containment
- Containment pressure peaked at 2.7 psig and is slowly decreasing
- The crew has implemented EP/2/A/5000/FR-H.1 (Response to Loss of Secondary Heat Sink)
- All attempts to restore flow to the S/Gs from the CA system have been unsuccessful

1. Which one of the following identified the next source of feed water that EP/2/A/5000/FR-H.1 will prioritize for restoration of flow to the S/Gs?
2. What is the <u>earliest</u> time (based on S/G conditions) the crew is required to establish bleed and feed?

A.
1. Through the CM/CF system using a main feed water pump
2. When W/R level in at least 3 S/Gs is less than 24%

B.
1. Through the CM/CF system using a main feed water pump
2. When W/R level in at least 3 S/Gs is less than 36%

C.
1. Through the CM/CF system using a hotwell and booster pumps only
2. When W/R level in at least 3 S/Gs is less than 24%

D.
1. Through the CM/CF system using a hotwell and booster pumps only
2. When W/R level in at least 3 S/Gs is less than 36%

ANSWER: A

WE11 EA1.1 - Loss of Emergency Coolant Recirculation
bility to operate and / or monitor the following as they apply to the (Loss of Emergency Coolant Recirculation)
CFR: 41.7 / 45.5 / 45.6)
Components, and functions of control and safety systems, including instrumentation, signals, interlocks, failure modes, and automatic and manual features.

Given the following conditions on Unit 1:

- EP/1/A/5000/ECA-1.1, Loss of Emergency Coolant Recirculation, has just been implemented
- The "FWST LEVEL LO-LO" alarm is LIT

Which ONE (1) of the following actions are required FIRST?

A. When FWST level decreases to less than 20 inches, reset Containment Spray AND stop the NS pumps.

B. When FWST level decreases to less than 20 inches, stop the NS pumps ONLY.

C. Immediately reset Containment Spray AND stop the NS pumps.

D. Immediately stop the NS pumps ONLY.

General Discussion

In accordance with ECA-1.1 Loss of Emergency Coolant Recirculation Enclosure 1 (Foldout) if FWST level goes below the FWST LEVEL LO-LO alarm setpoint (33 inches) and the NS pumps are taking a suction from the FWST then Reset Containment Spray and Stop both NS pumps.

Additionally, if FWST level goes below 20 inches then stop ALL pumps taking a suction on the FWST.

Answer A Discussion

INCORRECT: See explanation above.

PLAUSIBLE: This answer is plausible because the correct action is to reset Containment Spray and stop the NS pumps. However, it should be done immediately since FWST level is below the FWST LEVEL LO-LO alarm setpoint. The FWST level of 20 inches is plausible because at that level ECA-1.1 directs all pumps taking suction from the FWST to be stopped.

Answer B Discussion

INCORRECT: See explanation above.

PLAUSIBLE: This answer is plausible if the applicant does not recall that Enclosure 1 directs resetting Containment Spray prior to stopping the NS pumps. The FWST level of 20 inches is plausible because at that level ECA-1.1 directs all pumps taking suction from the FWST to be stopped.

Answer C Discussion

CORRECT: See explanation above.

Answer D Discussion

INCORRECT: See explanation above.

PLAUSIBLE: This answer is plausible if the applicant does not recall that Enclosure 1 directs resetting Containment Spray prior to stopping the NS pumps. The NS pumps should be stopped immediately since FWST level is below the FWST LEVEL LO-LO alarm setpoint. However, it should be done AFTER Containment Spray is reset.

Basis for meeting the KA

The KA is matched because the applicant demonstrates the ability to operate the NS pumps (i.e. Ability to operate and / or monitor "components" as they apply to the Loss of Emergency Coolant Recirculation) with regards to knowing what conditions in ECA-1.1 require the NS pumps to be stopped.

Basis for Hi Cog

Basis for SRO only

Job Level	Cognitive Level	QuestionType	Question Source
RO	Memory	BANK	2005 NRC Q17 (Bank 421)

Development References

Learning Objectives:
1) EPE1005

References:
1) EP/1/A/5000/ECA-1.1

Student References Provided

WE11 EA1.1 - Loss of Emergency Coolant Recirculation
Ability to operate and / or monitor the following as they apply to the (Loss of Emergency Coolant Recirculation)
(CFR: 41.7 / 45.5 / 45.6)

Components, and functions of control and safety systems, including instrumentation, signals, interlocks, failure modes, and automatic and manual features.

401-9 Comments:

Remarks/Status

401-9 Comments:

QUESTION 56

2556

C

Since A and B are both actions in ECA 1.1, the WOOTF statement should include the word "FIRST" to completely rule out A and B.
Facility please reevaluate.

Resolution / Comments:

Reworded stem of question to include FIRST per Lead Examiner's recommendation. See attached file for revised copy of question.

Question 56 References:

From EP/1/A/5000/ECA-1.1:

MNS EP/1/A/5000/ECA-1.1 **UNIT 1**	LOSS OF EMERGENCY COOLANT RECIRC Enclosure 1 - Page 1 of 1 **Foldout**	PAGE NO. 48 of 104 Rev. 12

1. **Emergency Coolant Recirc Capability Restoration:**

   - **WHEN** Cold Leg Recirc capability is restored, **THEN GO TO** Step 6.f in body of this procedure.

2. **ECCS Suction Monitoring Criteria:**

   - **IF** FWST level goes below "FWST LEVEL LO-LO" alarm setpoint (33 inches), **AND** NS pumps are taking suction from the FWST, **THEN:**

     a. Reset Containment Spray.
     b. Stop both NS pumps.

   - **IF** FWST level goes below 20 inches, **THEN** stop all pumps taking suction from the FWST.

   - **IF** suction source is lost to any NV, NI, ND, or NS pump, **THEN** stop pump.

3. **CA Suction Sources:**

   - **IF** CA Storage Tank (water tower) goes below 1.5 ft, **THEN** perform EP/1/A/5000/G-1 (Generic Enclosures), Enclosure 20 (CA Suction Source Realignment).

4. **CLA Isolation:**

   - **IF** at least two NC T-Hots are less than 354°F, **THEN** isolate CLAs **PER** Enclosure 10 (CLA Isolation).

D

2005 CNS SRO NRC Examination QUESTION 17

421

WE11 EA2.2 - Loss of Emergency Coolant Recirculation
Ability to determine and interpret the following as they apply to the (Loss of Emergency Coolant Recirculation)
(CFR: 43.5 / 45.13)
Adherence to appropriate procedures and operation within the limitations in the facility*s license and amendments.

Given the following:

- EP/1/A/5000/ECA-1.1, Loss of Emergency Coolant Recirculation, has just been implemented
- Refueling Water Storage Tank (FWST) level is 4.5%
-

Which of the following procedure actions is performed first while attempting to restore recirculation?

A. Initiate makeup to the FWST.

B. Start one reactor coolant pump.

C. Makeup to the NC system from the standby makeup pump.

D. Secure all ECCS and NS pumps taking a suction from the FWST.

General Discussion

All these actions are done, but are not done first. Based on stem conditions, Enclosure 1 applies which required all pumps taking a suction from the FWST to be secured. This is also a step in the body of the procedure.

Answer A Discussion

Answer B Discussion

Answer C Discussion

Answer D Discussion

Basis for meeting the KA

Basis for Hi Cog

Basis for SRO only

Job Level	Cognitive Level	QuestionType	Question Source
RO	Memory	BANK	

Development References
Lesson□OP-CN-EP-EP2 Objectives□20 REFERENCES□EP/1/A/5000/ECA-1.1

Student References Provided

WE11 EA2.2 - Loss of Emergency Coolant Recirculation

Ability to determine and interpret the following as they apply to the (Loss of Emergency Coolant Recirculation)
(CFR: 43.5 / 45.13)

Adherence to appropriate procedures and operation within the limitations in the facility*s license and amendments.

401-9 Comments:	Remarks/Status

APE024 AK2.04 - Emergency Boration
Knowledge of the interrelations between Emergency Boration and the following: (CFR 41.7 / 45.7)
Pumps . . . . . .

Given the following conditions on Unit 1:

- An ATWS has occurred
- The crew has entered FR-S.1 (Response to Nuclear Generation/ATWS)
- During the initiation of emergency boration, the following indications are noted:
  - Charging Flow = 47 GPM
  - Letdown Flow = 75 GPM
  - NC system pressure is 2300 PSIG
  - 1A NV pump is ON with suction aligned to the VCT
  - 1A and 1B BAT pumps are ON
  - 1NV-265B (Boric Acid To NV Pumps) is open
  - 1NV-244A (Chrg Line Cont Isol) is open
  - 1NV-245B (Chrg Line Cont Isol) is open

In accordance with FR-S.1, the MINIMUM required emergency boration flow is __(1)__ and if that flow is NOT met the Operator will __(2)__.

Which ONE (1) of the following completes the statement above?

A. 1. 30 GPM
   2. increase charging flow

B. 1. 60 GPM
   2. increase charging flow

C. 1. 30 GPM
   2. align the NV pump suction to the FWST

D. 1. 60 GPM
   2. align the NV pump suction to the FWST

General Discussion

In accordance with FR-S.1 there must be a minimum of 30 GPM emergency boration flow to ensure adequate boric acid is getting to the reactor. As part of the checks to ensure an adequate flow path an NV pump is started, both BA pumps are started, charging flow is checked to be greater than BA flow, NC system pressure is checked less than 2335 PSIG, and a check for adequate flow path is made.

Answer A Discussion

INCORRECT: See explanation above.

PLAUSIBLE: Part 1 is correct.

Part 2 is plausible if the applicant concludes that increasing charging flow will also in turn allow emergency boration flow to increase (by reducing the back-pressure on the emergency boration line).

Answer B Discussion

INCORRECT: See explanation above.

PLAUSIBLE: Part 1 is plausible because it is the normal BA flow that would be seen during a boration.

Part 2 is plausible if the applicant believes that increasing charging flow will also in turn allow emergency boration flow to increase (by reducing the back-pressure on the emergency boration line).

Answer C Discussion

CORRECT: See explanation above.

Answer D Discussion

INCORRECT: See explanation above.

PLAUSIBLE: Part 1 is plausible because it is the normal BA flow that would be seen during a boration.

Part 2 is correct.

Basis for meeting the KA

The KA is matched because the applicant must know the interrelation between the Charging Pumps and Boric Acid pumps during an emergency boration and the action to be taken if the required flow from the boric acid pumps is not achieved.

Basis for Hi Cog

Basis for SRO only

Job Level	Cognitive Level	QuestionType	Question Source
RO	Memory	NEW	

Development References

Learning Objectives:
1) EPFRS003

References:
1. FR-S.1

Student References Provided

APE024 AK2.04 - Emergency Boration
Knowledge of the interrelations between Emergency Boration and the following: (CFR 41.7 / 45.7)
Pumps . . . . . .

401-9 Comments:

Remarks/Status

401-9 Comments:

Stems should not include a "should." I did NOT find it anywhere in the procedure. The word should be "shall" or "will" or "must"

QUESTION 57 2557 C

Resolution / Comments:

Changed "should" to "will" per Lead Examiner's recommendation. See attached file for revised question.

Question 57 References:

From FR-S.1:

MNS EP/2/A/5000/FR-S.1 UNIT 2	RESPONSE TO NUCLEAR POWER GENERATION/ATWS	PAGE NO. 3 of 29 Rev. 10

ACTION/EXPECTED RESPONSE	RESPONSE NOT OBTAINED
5. **Initiate emergency boration of NC System as follows:**	
__ a. Ensure one NV pump - ON.	__ a. Place PD pump in service **PER** EP/2/A/5000/G-1 (Generic Enclosures), Enclosure 17 (PD Pump Startup).
b. Align boration flowpath as follows:	
__ 1) Open 2NV-265B (Boric Acid To NV Pumps).	
__ 2) Start both boric acid transfer pumps.	
__ 3) Check emergency boration flow - GREATER THAN 30 GPM.	3) **IF** NV pump suction is aligned to VCT, **THEN** align to FWST as follows:
	__ a) Open 2NV-221A (NV Pumps Suct From FWST).
	__ b) Open 2NV-222B (NV Pumps Suct From FWST).
	__ c) Close 2NV-141A (VCT Outlet Isol).
	__ d) Close 2NV-142B (VCT Outlet Isol).

ACTION/EXPECTED RESPONSE	RESPONSE NOT OBTAINED
5. (Continued)	
c. Check if NV flowpath aligned to NC System:	c. Perform the following:
__ • 2NV-244A (Charging Line Cont Outside Isol) - OPEN	1) **IF** NV pump suction is aligned to VCT, **THEN** align to FWST as follows:
__ • 2NV-245B (Charging Line Cont Outside Isol) - OPEN.	__ a) Open 2NV-221A (NV Pumps Suct From FWST).
	__ b) Open 2NV-222B (NV Pumps Suct From FWST).
	__ c) Close 2NV-141A (VCT Outlet Isol).
	__ d) Close 2NV-142B (VCT Outlet Isol).
	2) Open the following valves:
	__ • 2NI-9A (NC Cold Leg Inj From NV)
	__ • 2NI-10B (NC Cold Leg Inj From NV).
	__ 3) **GO TO** Step 5.e.
__ d. Ensure charging flow is greater than emergency boration flow.	
__ e. Check Pzr pressure - LESS THAN 2335 PSIG.	e. Perform the following:
	__ 1) **IF** all Pzr PORVs and isolation valves open, **THEN GO TO** Step 6.
	__ 2) **IF** Pzr PORV(s) **OR** isolation valves closed, **THEN** open Pzr PORV(s) and isolation valves as required to reduce Pzr pressure less than 2135 PSIG (200 PSIG less than PORV auto open setpoint).

APE028 AK1.01 - Pressurizer (PZR) Level Control Malfunction

Knowledge of the operational implications of the following concepts as they apply to Pressurizer Level Control Malfunctions: (CFR 41.8 / 41.10 / 45.3)

PZR reference leak abnormalities .....

Given the following conditions on Unit 1:

- Pressurizer Level transmitter 1 has failed low
- Prior to removing the Level Channel 1 from service, a leak develops on the reference leg for Pressurizer Level transmitter 2

Based on these conditions, the indication for Pressurizer Level Channel 2 fails __(1)__ AND the Pressurizer Level Master Controller __(2)__.

Which ONE of the following completes the statement above?

A. 1. low
   2. swaps to MANUAL

B. 1. low
   2. remains in AUTO

C. 1. high
   2. swaps to MANUAL

D. 1. high
   2. remains in AUTO

General Discussion

With regards to a wet leg level transmitter on a reference leg leak the differential pressure between the reference leg and the variable leg goes to zero and the indicated level therefore fails high.

With the Level Channel 1 transmitter input to the Level Select 1 failed to zero when the Level Channel 2 transmiiter input fails high (due to the reference leg leak) , an alternate action is received (due to the deviation between level transmitter inputs) and the Level Master Controller swaps to manual.

Answer A Discussion

INCORRECT: See explanation above.

PLAUSIBLE: Part 1 is plausible if the applicant confuses the operation of a dry leg level transmitter with a wet leg level transmitter as this would be the correct response.

Part 2 is correct.

Answer B Discussion

INCORRECT: See explanation above.

PLAUSIBLE: Part 1 is plausible if the applicant confuses the operation of a dry leg level transmitter with a wet leg level transmitter as this would be the correct response.

Part 2 is plausible if the applicant confuses the operation of the DCS Pressurizer Level Master Controller. If both transmitters failed low, it is plausible since there is no deviation between the two transmitters that an alternate action would not occur and the level controller would remain in auto. Additionally, if the applicant confuses the Level Master Controller with the NV-138 controller (which remains in auto on an Alternate Action) this answer is plausible.

Answer C Discussion

CORRECT: See explanation above.

Answer D Discussion

INCORRECT: See explanation above.

PLAUSIBLE: Part 1 is correct.

Part 2 is plausible if the applicant confuses the operation of the DCS Pressurizer Level Master Controller. If the applicant does not recall that multiple transmitter failures where there is a deviation between the transmitters will result in an alternate action they would conclude that the Level Master Controller remains in auto. Additionally, if the applicant confuses the Level Master Controller with the NV-138 controller (which remains in auto on an Alternate Action) this answer is plausible.

Basis for meeting the KA

The KA is matched because a Pressurizer level reference leg failure has occurred and the applicant must determine the operational implication. In this case the Level Master Controller has swapped to MANUAL. Therefore, if actual Pressurizer level changes, the LCS will not respond to restore level. It is up to the Operator to restore level manually.

Basis for Hi Cog

This is a higher cognitive level question because the applicant must associate multiple pieces of information both given and recalled from memory. The applicant is given that a transmitter input failure has occurred and must determine the direction in which the second transmitter fails and from both of those determine the effect on the LCS.

Basis for SRO only

Job Level	Cognitive Level	QuestionType	Question Source
RO	Comprehension	NEW	

Development References

Learning Objective:
1) PS-ILE-DCS #12

References:
1) Lesson Plan OP-MC-PS-ILE-DCS

Student References Provided

2) DCS Control Builders Sheets

.PE028 AK1.01 - Pressurizer (PZR) Level Control Malfunction

Knowledge of the operational implications of the following concepts as they apply to Pressurizer Level Control Malfunctions: (CFR 41.8 / 41.10 / 45.3)

PZR reference leak abnormalities .....

401-9 Comments:

Remarks/Status
401-9 Comments: No comment. ---------- Resolution / Comments: N/A

Question 58 References:

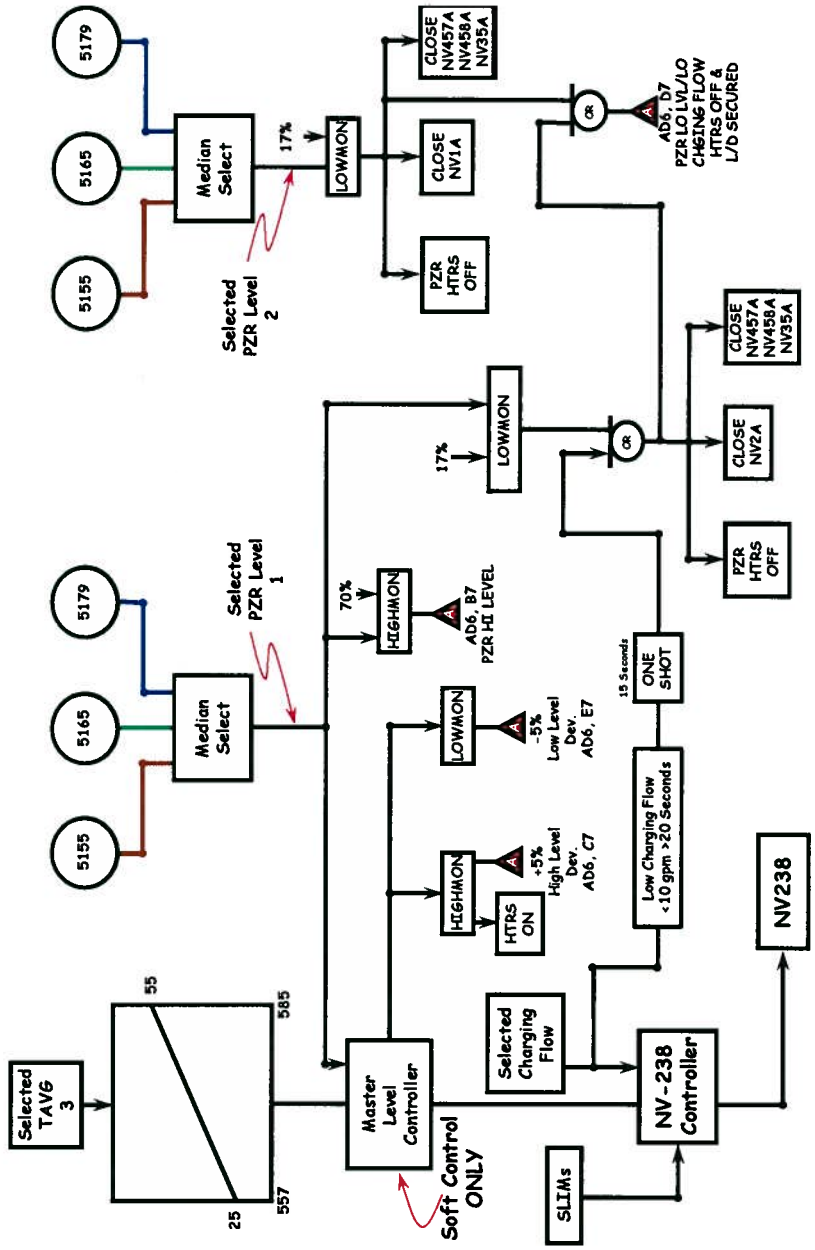

APE032 2.1.27 - Loss of Source Range Nuclear Instrumentation
APE032 GENERIC
Knowledge of system purpose and/or function. (CFR: 41.7)

Unit 1 is operating at 97% RTP when a Reactor Trip occurs. Given the following conditions:

Channel	Flux Level	SUR
SR N31	0 CPS	0 DPM
SR N32	0 CPS	0 DPM
IR N35	1.1×10^{-10} AMPS	-1/3 DPM
IR N36	9.5×10^{-11} AMPS	-1/3 DPM
PR N41	12%	
PR N42	0%	
PR N43	0%	
PR N44	0%	

Which ONE (1) of the following statements describes why the Source Range Nuclear Instruments are NOT indicating?

A. P-10 (Nuclear at Power) status light is LIT.

B. P-6 (S/R Block Permissive) status light is LIT.

C. P-10 (Nuclear at Power) status light is DARK.

D. P-6 (S/R Block Permissive) status light is DARK.

General Discussion

3 of 4 power range channels must be < 10% to auto-unblock SR NIs. Both intermediate range channels must be below P6 at 1x10-10. When the P-6 permissive is DARK, the source range block permissive is removed and source range NIs will normally be energized. Based on one IR channel being greater than P-6, the P-6 permissive lit should be LIT and the SRs will not energize. Since 3/4 PR channels are less than P-10, the P-10 permissive should be dark and therefore is NOT preventing the SRs from energizing.

Answer A Discussion

INCORRECT: See explanation above.

PLAUSIBLE: This answer is plausible if the applicant confuses the logic for the P-10 permissive. The P-10 Persmissive light being LIT would prevent the SRs from energizing. However, in this case since 3/4 PR channels are less than 10% the light should NOT be LIT.

Answer B Discussion

CORRECT: See explanation above.

Answer C Discussion

INCORRECT: See explanation above.

PLAUSIBLE: This answer is plausible if the applicant confuses the logic for the P-10 permissive or does not understand which state for the P-10 Permissive light allows automatic re-energizing of the SRs.

Answer D Discussion

INCORRECT: See explanation above.

PLAUSIBLE: This answer is plausible if the applicant does not recall which state for the P-6 permissive light allows for automatic energizing of the SRs.

Basis for meeting the KA

For this question, the applicant is given indications that N41 has malfunctioned (indicating high). Additionally, they are given indications that N-36 is indicating high (potentially undercompensated) and preventing the P-6 permissive from clearing. This KA is matched since the operation of the P-6 permissive is a "function" of the system that in this case has resulted in a loss of both Source Range Nuclear Instruments.

Basis for Hi Cog

This is a higher cognitive level question because it requires the applicant to analyze a given set of conditions and compare them to what the NI readings (recalled from memory) should be for this condition.

Basis for SRO only

Job Level	Cognitive Level	QuestionType	Question Source
RO	Comprehension	BANK	2004 NRC Q36 (Bank 1236)

Development References

Lesson Plan Objective: IC-ENB #12
IC-IPE #11
References:
1. OP-MC-IC-IPE Section 3.1.3
2. OP-MC-IC-ENB Sections 2.7 and 2.1.4

Student References Provided

APE032 2.1.27 - Loss of Source Range Nuclear Instrumentation
APE032 GENERIC
Knowledge of system purpose and/or function. (CFR: 41.7)

401-9 Comments:

Remarks/Status

401-9 Comments:

No comment.

Resolution / Comments:

N/A

Question 59 References:

From Lesson Plan OP-MC-IC-IPE Section 3.1.3:

Objective # 10

NC Pump Bus Under Frequency (2/4 busses = 56 Hz) - this anticipatory loss of coolant flow trip protects against DNB. The trip also trips open all four NC pump breakers to prevent electrical braking of the pump motors during frequency decay. A reduction in pump speed would reduce fly wheel inertia and pump coast down flow capability. This "at-power" trip protection is auto-blocked < 10% power (P-7) and is automatically reinstated > P-7.

SG Lo-Lo Level (2/4 channels on 1/4 SGs = 17%) - protects against a loss of heat sink. This protection also causes an auto-start of the CA motor driven pumps (2/4 channels on 1/4 SGs) and the CA turbine driven Pump (2/4 channels on 2/4 SGs).

Single Loop Loss of Flow (2/3 channels in 1/4 loops = 88%) - protects against DNB. This protection is auto-blocked < 48% (P-8) and automatically reinstated > P-8.

Two Loop Loss of Flow (2/3 channels in 2/4 loops = 88%) - protects against DNB. This protection is auto-blocked < 10% (P-7) and automatically reinstated > P-7.

Safety Injection (any SI signal 1/2 Trains) - initiates a reactor trip during LOCA events.

Turbine Trip (2/3 channels ASO < 45psig, 4/4 stop valves closed) - protects against loss of integrity by preventing Pressurizer PORVs from opening on turbine trip at high power.

Objective # 4, 10

General Warning (2/2 Trains) - protects against a loss of both protection trains. Anytime a General Warning is present on both SSPS trains a reactor trip will occur. General Warning is caused by: loose circuit board card; loss of voltage (AC or DC); SSPS train in "Test"; a Reactor Trip By-pass breaker in the Connected position and Closed; a Logic Ground Return fuse blown.

3.1.3 Protection Permissive Interlocks

Objective # 11

P-4 (Reactor Trip Breaker and Bypass Breaker Open for a given train) - initiates: Turbine Trip; Feedwater Isolation (coincident with low Tavg of 553 °F); Allows reset of SI signal after one minute time-out; Inputs to Steam Dump Control System for plant trip mode.

P-6 (1/2 IR instruments > 10^{-10} amps) - allows Manual Block of SR reactor trip. On a power reduction, provides automatic reinstatement of SR high voltage and SR reactor trip when 2/2 IR channels < 10^{-10} amps.

P-7 (2/4 PR instruments > 10% or 1/2 Turbine Impulse Pressures > 10%) - Enables (unblocks) the "at power" reactor trips: Pzr Hi-Level, Pzr Lo-Pressure, 2 Loop Loss of Flow, NCP UV, and NCP UF. The above trips are automatically blocked when below P-7, 3/4 PR < 10% and 2/2 Impulse Pressure < 10%.

Objective # 11

P-8 (2/4 PR instruments > 48% power) - enables Single Loop Loss of Flow and Reactor Trip upon Turbine Trip.

P-10 (2/4 PR instruments > 10%) - allows Manual Block of PR High Flux / Low Setpoint reactor trip. Allows Manual block of IR High Flux Rod Stop (C-1) and Reactor Trip, blocks Manual reset of SR high voltage and SR reactor trip > P-10. P-10 provides an input to P-7. Below P-10 (3/4 PR instruments < 10%) - allows Manual reset of SR High Voltage and Reactor trip. This is used if one IR channel does not decrease below P-6 to Auto energize the SR circuit.

P-11 (2/3 Presurizer Pressure instruments < 1955 psig) - allows Manual Block of Lo-Pzr pressure SI (Auto instate > P-11); allows Manual block of Lo Press Stm Line Isol (Auto instate > P-11); Allows Manual block of motor driven CA pump Auto-start (Auto instate > P-11); and initiates opening of Cold Leg Accumulator isolation valves when > P-11.

P-12 (2/4 Lo-Lo TAVG < 553°F) - provides Auto-block of steam dumps preventing excessive cooldown by the steam dumps.

P-13 (1/2 Impulse Pressure instruments > 10%) - this turbine at power permissive provides an input to P-7.

P-14 (2/3 Hi-Hi level instruments on 1/4 SGs > 83%) - actuates a Turbine Trip, CFPT Trip and Feedwater Isolation.

3.1.4 Control Interlocks

Objective # 12

C-1 (1/2 IR channels amps > 20%) - blocks Auto and Manual rod withdrawal.

C-2 (1/4 PR channels amps > 103%) - blocks Auto and Manual rod withdrawal.

C-3 (2/4 ΔT channels within 2% of OTΔT setpoint) - blocks Auto and Manual rod withdrawal plus actuates a turbine runback at 200%/min for 2.3 seconds out of 30 seconds.

C-4 (2/4 ΔT channels within 2% of OPΔT setpoint) - blocks Auto and Manual rod withdrawal plus actuates a turbine runback at 200%/min for 2.3 seconds out of 30 seconds.

C-5 (1/1 Impulse Pressure channels < 15%) - blocks Auto rod withdrawal.

C-7A (1/1 Impulse Pressure channel Ch II rate of change decrease > 5%/min or a step change decrease > 10%) - arms condenser dump valves on a load rejection.

From Lesson Plan OP-MC-IC-ENB Section 2.7:

2.7 Power Supplies

NIS Channel I	EKVA
NIS Channel II	EKVB
NIS Channel III	EKVC
NIS Channel IV	EKVD
Wide Range Train A	EKVA
Wide Range Train B	EKVD

3.0 SYSTEM OPERATION

3.1 Normal Operation

3.1.1 Operating Procedures

The Excore Nuclear Instrumentation System provides the operator with neutron flux indication for all modes of operations. During each reactor startup, a healthy skepticism concerning the validity of power indications is warranted, particularly following a refueling outage. Changes in plant equipment or conditions, along with a strong desire to return the plant to full operation, may influence personnel to accept less than complete explanations for discrepant indications. For example, excessive electrical generation for the nuclear power indicated (a symptom of miscalibrated nuclear instruments) has been attributed to factors such as: cold circulating water temperature, expected efficiency improvements, and changes in core design or instrumentation.

From Lesson Plan OP-MC-IC-ENB Section 2.1.4:

The Pulse Shaper shapes pulses into uniform square waves.

The Pulse Driver matches impedance between the Pulse Shaper and the Log Pulse Integrator.

The Log Pulse Integrator changes the pulse signal to a voltage output proportional to logarithm of pulse rate.

The Level Amplifier amplifies the signal from the Log Pulse Integrator to drive bistables, indicators and other circuits.

A Bistable Relay Driver provides the "**High Flux at Shutdown**" Alarm and the "**Containment Evacuation**" Alarm whenever the source range counts exceed the setpoint. Another Bistable Relay Driver provides the "**High Level Trip**" signal (10^5 cps).

An isolation amplifier feeds the OAC, SUR Circuitry, Control Board Meter, and the NR-45 Chart Recorder.

2.1.3 Source Range Outputs

Both Source Range channels read out on the Control Board with a range of 10^0 to 10^6 counts per second (cps). The Source Range level can be monitored on the NR-45 Control Room Chart Recorder. In addition to counts per second, Source Range Start-up Rate (SUR) is indicated for each channel in decades per minute (-0.5 to 5.0 DPM).

The High Flux at Shutdown alarm actuates when source range level reaches the setpoint of one half decade above normal shutdown counts. High Flux at Shutdown also actuates the Containment evacuation alarm inside the containment. A 5 second time delay precludes short duration spikes from actuating the Hi Flux at Shutdown and Containment Evacuation alarms.

2.1.4 Source Range Drawer Panel (Reference **Figure 7.5**).

Objective # 8

Detector Volts Meter - Indicates high voltage supplied to proportional counter detector.

Neutron Level Meter - Scale 10^0 to 10^6 cps.

Instrument Power "ON" Lamp - 118 volts AC Instrument power applied to drawer.

Control Power "ON" Lamp - 118 volts AC Control Power applied to drawer.

Channel "On Test" Lamp - Indicates the operation selector switch is in a position other than "NORMAL".

Loss of Detector Volt Lamp - Indicates high voltage to detector off or low.

Level Trip Lamp - indicates neutron level greater than trip setpoint in Source Range.(10^5 cps)

Level Trip Bypass Lamp - On when Level Trip switch in "Bypass" for test or calibration.

High Flux at Shutdown Lamp - Neutron level greater than 1/2 decade above normal shutdown level in Mode 6 and $\leq$ 5 times shutdown level in Modes 3,4&5.

Bistable Trip Spare Lamp - No function.

Instrument Power Fuses - Overcurrent protection for power supply circuits. Instrument power supplies the meters, circuit processing components, high voltage supply and detector power. This is true for the IR and PR drawers/circuits also.

Control Power Fuses - Overcurrent protection for control signal circuit transformers. Control power supplies the lights on the drawer and 118 VAC to the bistable relay drivers to the plant relays. (High flux at shutdown alarm and SR high level trip). This is true for the IR and PR drawers/circuits also.

NOTE (Reference **Figure 7.21**): If either instrument or control power fuses are removed, the bistables will trip. Level Trip Bypass will prevent bistable trip for Instrument Power fuses only.

Objective # 10

Level Trip Switch - Two position switch: Normal - Switch Inactive; Bypass - Enables Operation Selector Switch for test and calibration; Provides AC signal to prevent Rx trip signal during testing.

Operation Selector Switch - Eight position switch enabled by Level Trip Switch to 'Bypass' position. Channel On Test lamp lights when not in Normal. Normal - Switch Inactive; Six Test Positions with Preset cps test values; Level Adjust - Level Adjust Potentiometer in circuit.

Level Adjust Potentiometer - Adjustable test signal into level amp. - Enables adjustment of the trip level of various bistables.

Objective # 10

High Flux at Shutdown Switch - Two position switch. Normal -allows circuit to provide "High Flux at Shutdown" and "Containment Evacuation" alarm when setpoint is exceeded; Block-used during startup - Blocks High Flux at Shutdown Alarm and Containment Evacuation Alarm.

2.2 Intermediate Range

2.2.1 Intermediate Range Detectors

Objective # 6

Reference **Figure 7.6**. Both intermediate range channels use compensated ion chambers to determine reactor power. These detectors are located just above the source range detectors in the same housing. The compensated ion chamber (CIC) uses two concentric Nitrogen gas filled, volumes: the "outer" is sensitive to both neutrons and gamma (boron lined); the "inner" sensitive only to gamma. As the two volumes are mounted concentrically in one unit, both are in essentially the same radiation field. By placing a negative potential on the inner lead, the gamma signal generated in the inner volume is made to compensate or cancel out the gamma signal generated in the outer volume. Since the two volumes can not be manufactured exactly the same size, the high voltage to the center electrode is variable to adjust the sensitivity of the inner volume. Operating in the recombination region, a change in inner

volume detector voltage will vary the gamma current for a given flux level. The outer volume operates in the ion chamber region where all the ion pairs are collected.

C

2004 CNS SRO NRC Examination QUESTION 36

1236

APE032 AA2.05 - Loss of Source Range Nuclear Instrumentation
Ability to determine and interpret the following as they apply to the Loss of Source Range Nuclear Instrumentation: (CFR: 43.5 / 45.13)
Nature of abnormality, from rapid survey of control room data .....

Unit 1 is operating at 97% power when a reactor trip occurred. Given the following conditions:

Channel	Flux Level	SUR
PR N44	0 %	
PR N43	11%	
PR N42	0 %	
PR N41	12%	
IR N36	$9x10^{-11}$	-1/3 DPM
IR N35	$5x10^{-11}$	-1/3 DPM
SR N32	0 CPS	0 DPM
SR N31	0 CPS	0 DPM

Which one of the following statements correctly describes why the source range instruments are not indicating?

A. P-6 (S/R Block Permissive) status light is DARK.

B. Loss of power to bus 1ERPD.

C. P-10 (Nuclear at Power) status light is LIT.

D. Loss of power to bus 1ERPB.

General Discussion

Bank Question: 1146
3 of 4 power range channels must be < 10% to auto-unblock SR NIs. Both intermediate range channels are below P6 at 1x10-10. When the P-6 permissive is DARK, the source range block permissive is removed and source range NIs will normally be energized. The P-10 permissive prevents this normal operation.

Answer A Discussion

Plausible: If the candidate thinks that intermediate range NIs are not below P-6 or does not recognize that 3 of 4 power range channels must be < 10%.

Answer B Discussion

Incorrect: Loss of 1ERPD does not affect source range.
Plausible: Loss of 1ERPD would cause N44 to read zero power. If the candidate thinks that loss of 1ERPD can deenergize P-10, and reverses the effect of P-10 on loss of power.

Answer C Discussion

Correct: 3 of 4 power range channels must be < 10% to auto-unblock SR NIs. NI-43 and NI-41 are still above "NOT P-10".

Answer D Discussion

Incorrect: Loss of 1ERPB would cause only N42 to read zero.
Plausible: If the candidate thinks that loss of 1ERPB can deenergize P-10, and reverses the effect of P-10 on loss of power.

Basis for meeting the KA

Basis for Hi Cog

Basis for SRO only

Job Level	Cognitive Level	QuestionType	Question Source
RO	Comprehension	BANK	

Development References

Lesson Plan Objective: IC-ENB SEQ 6
References:
1. OP-CN-IC-ENB page 10, 25, 41
2. OP-CN-IC-IPX page 37

Student References Provided

APE032 AA2.05 - Loss of Source Range Nuclear Instrumentation
Ability to determine and interpret the following as they apply to the Loss of Source Range Nuclear Instrumentation: (CFR: 43.5 / 45.13)
Nature of abnormality, from rapid survey of control room data .....

401-9 Comments:

Remarks/Status

APE033 AA1.03 - Loss of Intermediate Range Nuclear Instrumentation

bility to operate and / or monitor the following as they apply to the Loss of Intermediate Range Nuclear Instrumentation: (CFR 41.7 / 45.5 / 5.6)

Manual restoration of power .....

Given the following conditions on Unit 1:

- Unit is currently at 35% RTP
- A unit shutdown is in progress
- Intermediate Range Channel N35 fails
- N35 Level Trip Bypass switch has been placed in "BYPASS" in accordance with AP-16 (Malfunction of Nuclear Instrumentation)
- N35 Instrument Power fuses and Control Power fuses have been removed for troubleshooting

Which ONE (1) of the following describes the actions required to prevent a Reactor Trip and the MINIMUM power level at which those actions must be performed if the unit shutdown is continued?

A. N35 Control Power fuses ONLY must be installed or a Reactor Trip will occur when power decreases to less than 10% RTP.

B. N35 Control Power fuses ONLY must be installed or a Reactor Trip will occur when power decreases to less than 25% RTP.

C. N35 Control Power fuses AND Instrument Power fuses must be installed or a Reactor Trip will occur when power decreases to less than 10% RTP.

D. N35 Control Power fuses AND Instrument Power fuses must be installed or a Reactor Trip will occur when power decreases to less than 25% RTP.

General Discussion

When the Control Power and Instrument Power fuses are removed, the N35 bistables will trip (i.e. IR High Flux Trip). Unlike a Power Range channel where removing only the Control Power fuses will cause the bistables to trip, in the case of the IR channel, removing EITHER the Control Power or Instrument Power fuses will cause the bistables to trip.

In this particular case, even though the bistables are tripped, a Reactor Trip does not occur. The IR Hi Flux trip had been previously blocked when the P-10 permissive was met (> 10% Power).

If the unit shutdown was continued and power decreased to less than 10% RTP, the reactor would trip on IR Hi Flux unless BOTH the Control Power and Instrument Power fuses are installed. Alternatively, the Control Power fuses could be installed AND the Level Trip Bypass switch placed in "BYPASS" to prevent a Reactor Trip.

Answer A Discussion

CORRECT: See explanation above.

Answer B Discussion

INCORRECT: See explanation above.

PLAUSIBLE: This answer is plausible because the Control Power Fuses must be installed. Installing the fuses prior to decreasing to less than 25% power is plausible since this is the equivalent power at which the IR Hi Flux Trip occurs.

Answer C Discussion

INCORRECT: See explanation above.

PLAUSIBLE: This answer is plausible because both set of fuses would have to be installed prior to decreasing power to less than 10% power if the Level Trip Bypass Switch had not been placed in bypass as directed by procedure.

Answer D Discussion

INCORRECT: See explanation above.

PLAUSIBLE: This answer is plausible because both sets of fuses would have to be installed to prevent a trip if the Level Trip Bypass switch had not been placed in bypass as directed by AP-16. Installing fuses prior to 25% power is plausible since this is the equivalent power at which the IR Hi Flux Trip occurs.

Basis for meeting the KA

This KA is matched because the applicant will demonstrate the ability to "operate" the IR Nuclear Instrumentation by demonstating a knowledge of effect of removing the Instrument Power and Control Power fuses and when power must be restored to the channel during a unit shutdown.

Basis for Hi Cog

This is a higher cognitive level question because it requires the applicant to associate multiple pieces of information. First, the applicant must recall from memory the effect of removing the control power and instrument power fuses from the IR channel. The applicant must then compare that information to the conditions given in the stem of question to determine the effect of continuing the shutdown with the fuses removed and what actions must be taken to continue the shutdown without causing a Reactor Trip. Since this question requires more than one mental step to arrive at the correct answer, this is a higher cognitive level question.

Basis for SRO only

Job Level	Cognitive Level	QuestionType	Question Source
RO	Comprehension	NEW	

Development References

Learning Objective IC-ENB #8

References:
1. Lesson Plan OP-MC-IC-ENB Section 2.2.5
2. Lesson Plan OP-MC-IC-IPE Figure 7.7

Student References Provided

APE033 AA1.03 - Loss of Intermediate Range Nuclear Instrumentation

Ability to operate and / or monitor the following as they apply to the Loss of Intermediate Range Nuclear Instrumentation: (CFR 41.7 / 45.5 / 45.6)

Manual restoration of power .....

1-9 Comments:

Remarks/Status

401-9 Comments:

The way these are written, if B is correct then A is correct. If D is correct, C would be correct too. Qualifiers need to be added to eliminate the subsets. This Q is U because of two invalid responses.

Resolution / Comments:

We had lengthy discussions about subset issues when we wrote this question and specifically wrote the question to include "a Reactor Trip will occur when" because we felt it was a qualifier that eliminated the subset issue. However, re-wrote the stem to add another qualifier there too. See attached file for two versions of proposed revision.

Question 60 References:

From Lesson Plan OP-MC-IC-ENB Section 2.2.5:

Bistable Relay Drivers provide the "**P-6 Permissive**," the "**Low Power Rod Stop**" and the "**Reactor Trip**" whenever the intermediate range amps exceed the setpoint. An isolation amplifier feeds the OAC, SUR Circuitry, Control Board Meter, and the NR-45 Chart Recorder.

2.2.4 Intermediate Range Outputs

Both Intermediate range channels read out on the Control Board with a range of 10^{-11} to 10^{-3} amps. The Intermediate Range level can be monitored on the NR-45 Control Room Chart Recorder. In addition to counts per second, Intermediate Range Start-Up Rate (SUR) is indicated for each channel in decades per minute (-0.5 to 5.0 DPM).

The **P-6 Source Range Block Permissive** actuates when **"1-out-of-2" (1/2) IR channels exceeds 10^{-10} amps**.

The **Low Power Rod Stop** prevents outward motion of the rods in Auto and Manual when **1/2 IR channels exceeds amps equivalent to 20% reactor power**.

The **Low Power Reactor Trip** protects the core from startup accidents when **1/2 IR channels exceeds amps equivalent to 25% reactor power**.

2.2.5 Intermediate Range Drawer Panel (Reference **Figure 7.9**).

Objective # 8

Ampere Neutron Level Meter - Indicates current output of detector in amps with a range of eight decades (10^{-11} to 10^{-3} amps)

Instrument Power "ON" Lamp - 118 volt AC instrument power is applied to drawer.

Control Power "ON" Lamp - 118 volt AC control power is applied to driver assembly control circuits.

Channel On Test Lamp - Indicates Operation Selector switch is in a position other than "NORMAL".

Level Trip Bypass Lamp - Indicates Level Trip switch in "BYPASS" position.

High Level Trip Lamp - ON when neutron flux in IR exceeds current equivalent to 25% full power. (Approximately 5.5×10^{-5} amp).

High Level Rod Stop lamp - ON when IR current equivalent to 20% full power.

Power Above Permissive P-6 Lamp - Lights when IR reaches 10^{-10} amps. **Allows blocking Source Range Instruments**.

Loss of Detector Volt Lamp - Indicates low or loss of high voltage to detector.

Loss of Comp. Volt Lamp - Indicates loss of compensating voltage to detector.

AC Inst. Power Fuses - Overcurrent protection for instrument power.

AC Control Power Fuses - Overcurrent protection for control power.

NOTE (Reference **Figure 7.21**): If either instrument or control power fuses are removed, the bistables will trip. Level Trip Bypass will prevent bistable trip for Instrument Power fuses only.

From Lesson Plan OP-MC-IC-IPE Figure 7.7:

7.7 Protection Permissive Interlocks (12/17/99)

INTERLOCKS	LOGIC	FUNCTION
P-10	2/4 P.R. > 10% FP	On increasing power P-10 allows manual block of the Intermediate Range trip and rod stop (C-1). Allows block of the Power Range High Flux Low Setpoint trip and prevents the Source Range instruments from being Manually energized. (Will automatically de-energize both source range detectors if not previously de-energized at P-6.) Also provides an input to P-7. On decreasing power, the Intermediate Range trip and the Power Range trip are automatically reactivated, allows manual reset of SR High Voltage block if one IR channel does not decrease below P-6 to auto energize the SR circuit.
P-11	2/3 Pzr Press < 1955	On decreasing pressure (<1955 #) P-11 allows manual block of Low Pzr Pressure Safety Injection, Lo Press Stm Line Isol and CA Pump Auto start. Enables High Steam Rate Main Steam Isolation.
P-12	2/4 Lo-Lo Tave < 553 °F	Blocks steam dumps
P-13	1/2 Impulse Press > 10%	Input to P-7
P-14	2/3 Level on 1/4 S/G Hi-Hi Level > 83%	• Turbine Trip • FWPT Trip • Feedwater Isolation

2010 MNS SRO NRC Examination QUESTION 61

2561

D

APE059 AK1.01 - Accidental Liquid Radioactive-Waste Release

Knowledge of the operational implications of the following concepts as they apply to Accidental Liquid Radwaste Release: (CFR 41.8 / 41.10 / 45.3)

Types of radiation, their units of intensity and the location of the sources of radiation in a nuclear power plant .....

An NEO reports a leak in the 1A NV pump room. Water from the leak is spraying into the air and is also collecting on the floor.

Radiation Protection (RP) is notified and determines the water is contaminated. RP reports that the radiation from the leak is exclusively a skin dose and absorption concern.

The radiation emitted from the contamination is predominately __(1)__.

This event results in a Trip 2 alarm on 1EMF-41 (Aux Building Ventilation). The Auxiliary Building Ventilation __(2)__.

Which ONE (1) of the following completes the statements above?

A. 1. Alpha
   2. supply and exhaust fans will trip

B. 1. Beta
   2. supply and exhaust fans will trip

C. 1. Alpha
   2. filter train will be placed in service

D. 1. Beta
   2. filter train will be placed in service

General Discussion

The radiation that poses a skin dose concern is Beta. Alpha is shielded by layers of clothing or paper and poses no skin dose threat.

On a Trip 2 alarm on EMF-41, the Auxiliary Building Ventilation system filter train will be placed in service (un-bypassed).

Answer A Discussion

INCORRECT: See explanation above.

PLAUSIBLE: Part 1 is plausible if the applicant does not recall the concern with Alpha and Beta radiation.

Part 2 is plausible if the applicant does not recall the automatic actions caused by EMF-41. It is plausible to believe that the supply and exhaust fans would trip to prevent the spread of airborne radiation.

Answer B Discussion

INCORRECT: See explanation above.

PLAUSIBLE: Part 1 is correct.

Part 2 is plausible if the applicant does not recall the automatic actions caused by EMF-41. It is plausible to believe that the supply and exhaust fans would trip to prevent the spread of airborne radiation.

Answer C Discussion

INCORRECT: See explanation above.

PLAUSIBLE: Part 1 is plausible if the applicant does not recall the concern with Alpha and Beta radiation.

Part 2 is correct.

Answer D Discussion

CORRECT: See explanation above.

Basis for meeting the KA

The KA is matched because and accidental liquid radwaste release has occurred and the applicant must know the type of radiation causing the concern based on the description and the operational concern based on automatic actions that will occur as a result of the release.

Basis for Hi Cog

Basis for SRO only

Job Level	Cognitive Level	QuestionType	Question Source
RO	Memory	BANK	2006 NRC Q22 (Bank 628)

Development References

Learning Objectives:
1) RAD-RP#6
2) WE-EMF#2,3

References:
1) NANTEL Generic Radiation Working Training Lesson Plan
2) Lesson Plan OP-MC-WE-EMF Section 2.1.6

Student References Provided

APE059 AK1.01 - Accidental Liquid Radioactive-Waste Release

Knowledge of the operational implications of the following concepts as they apply to Accidental Liquid Radwaste Release: (CFR 41.8 / 41.10 / 45.3)

s of radiation, their units of intensity and the location of the sources of radiation in a nuclear power plant .....

401-9 Comments:

Remarks/Status

401-9 Comments:

QUESTION 61 2561 D

I am not convinced that the stem excludes alpha. The distractor analysis is not clear on it either. The reference states that it is an internal hazard. The stem references an airborne concern. Add something to the stem to eliminate C as a potential correct answer.

Resolution / Comments:

Changed stem of question to read "The radiation emitted from the water on the floor is primarily _____ ". This will eliminate alpha as a potential answer because it eliminates the airborne contamination. The only reason the airborne contamination is included is to give plausibility to the EMF-41 alarm. See attached file for proposed revision.

Question 61 References:

From NANTEL "Generic Radiation Worker Training" Lesson Plan:

- exposure hazard (for example, whole-body, skin, eyes)
- major sources

Alpha

- Penetrating ability: least penetrating ability of the four types; travels approximately one inch in the air.
- Shielded by: a piece of paper, lightweight clothing, or outer layer of skin.
- Type hazard: internal hazard – can result in high dose to sensitive organs.
- Major source: nuclear fuel.

Beta

- Penetrating ability: travels a few feet in the air.
- Shielded by: lightweight plastic or aluminum.
- Type hazard: eyes and skin are most susceptible to beta radiation. It can be an internal hazard.
- Major source: most beta particles come from activated corrosion and fission products.
- Additional information: personnel must work close to a beta source to receive much dose.

Gamma

- Penetrating ability: very high. Penetrates the whole body.
- Shielded by: very dense material; usually lead, steel, water, and concrete.
- Type hazard: whole-body dose hazard.
- Major source: fission, fission products, and activation products in the primary system piping.
- Additional information: has no mass or electrical charge – it is pure energy.

Neutron

- Penetrating ability: very high.
- Shielded by: water, paraffin, or concrete.
- Type hazard: whole-body dose hazard.
- Major source: mainly a problem only near the reactor when it is operating.
- Additional information: Neutrons are freed from the nucleus by decay or fission and have no electrical charge.

Where You Will Find Alpha Radiation

Alpha radiation is primarily found in or near the fuel assemblies. Remember that alpha radiation can't even penetrate paper. Since the fuel is contained in metal rods, the main hazard from alpha radiation exists only if the fuel assembly develops leaks.

Where You Will Find Neutron Radiation

Neutron radiation is normally a concern only when the reactor is running. This is

From Lesson Plan OP-MC-WE-EMF Section 2.1.6:

2.1.6 Auxiliary Building Ventilation Monitor

The Auxiliary Building is monitored by 0EMF 41 - Aux Building Ventilation.

Objective # 2, 5

EMF-41 uses a scanner capable of monitoring 12 points within the Auxiliary Building ventilation ducts. These points are located to provide maximum coverage of Auxiliary Building rooms. (refer to Drawing 7.2 and 7.3)

NOTE: Sample point 6 has been deleted, so only 11 points are currently monitored.

A timed sample system is used to control the solenoid valves (refer to Drawing 7.4). **Each sample point takes about 2.5 minutes, 1.5 minutes to purge and 1 minute to sample. Thus, each point will be sampled twice per hour.** The flow rate for each sample line is 1 scfm. This 1 scfm from the sampled line is routed through the detector. A SCAN/STOP switch is provided to control EMF 41 operation mode: (refer to Drawing 7.4)

- **Scan Mode - provides automatic sequential sampling of 11 Aux. Bldg areas. PT/1/A/4600/03B requires the toggle switch to be in the scan position.**
- **Stop - provides continuous sampling of one area.**

A ready light - illuminates while EMF is sampling and off while purging. A STEP switch allows manual selection of desired sample point. This option is available in the SCAN mode only. A point window provides an LED readout that displays selected sample point. When the scanner is selected to a single point, remote readout to the OAC and Pi database is disabled. Only the local Control Room module readout is available.

Objective # 2, 3

On a Trip 2 high radiation alarm, Aux. Building Ventilation will be passed through filter units ABFU-1 and ABFU-2 (filter bypass will be terminated). The following dampers will open:

- 1ABF-D-4A 2ABF-D-4A
- 1ABF-D-4B 2ABF-D-4B
- 1ABF-D-5A 2ABF-D-5A
- 1ABF-D-5B 2ABF-D-5B

The following dampers will close:

- 1ABF-D-3
- 2ABF-D-3
- 1ABF-D-6
- 2ABF-D-6

N/A - N/A
Never Assigned to a K/A

An NLO is performing a leakage check to determine identified leakage for use during the NC Leakage Test. While completing the check he inadvertently spills 1 gallon of liquid on the floor.

Radiation Protection (RP) is notified and determines the water is contaminated. RP reports the radiation is primarily a skin dose and absorption concern.

Which one of the following correctly describes the type of radiation which is emitted from the fluid and where this radioactive material comes from?

A. Alpha
Tritium due to activation of hydrogen in the reactor coolant

B. Beta
Tritium due to activation of hydrogen in the reactor coolant

C. Alpha
Cobalt due to activation of corrosion or wear products

D. Beta
Cobalt due to activation of corrosion or wear products

General Discussion

Answer A Discussion

Incorrect:
Plausible: Second part of answer is correct but alpha is not a skin dose concern and is not normally emitted by liquids.

Answer B Discussion

Answer C Discussion

Incorrect
Plausible: Alpha is not a skin dose concern and activated corrosion or wear products cannot be absorbed thru the skin.

Answer D Discussion

D.□Incorrect:
□Plausible: Beta is correct but activated corrosion or wear products cannot be absorbed thru the skin.

Basis for meeting the KA

Basis for Hi Cog

Basis for SRO only

Job Level	Cognitive Level	QuestionType	Question Source
RO	Memory	BANK	

Development References	Student References Provided
GET Manual	

N/A - N/A
Never Assigned to a K/A

401-9 Comments:	Remarks/Status

APE068 AA1.01 - Control Room Evacuation

Ability to operate and / or monitor the following as they apply to the Control Room Evacuation: (CFR 41.7 / 45.5 / 45.6)

S/G atmospheric relief valve .....

Given the following plant conditions:

- The Control Room has been evacuated due to a chlorine gas leak
- AP-17 (Loss of Control Room) has been implemented on both units
- An Operator has been dispatched to control 1A & 1D SG PORVs using AP-17, Enclosure 7 (Manual Control of PORVs)

The Operator dispatched to perform Enclosure 7 will control the SG PORVs using manual loaders located in the __(1)__. To establish control of the SG PORVs the Operator must __(2)__.

Which ONE (1) of the following completes the statements above?

A. 1. Exterior Doghouse
   2. open the VI supply from the local manual loader ONLY

B. 1. Interior Doghouse
   2. open the VI supply from the local manual loader ONLY

C. 1. Exterior Doghouse
   2. open the VI supply from the local manual loader AND close the VI supply from the Control Room manual loader

D. 1. Interior Doghouse
   2. open the VI supply from the local manual loader AND close the VI supply from the Control Room manual loader

---

General Discussion

Local - Manual Operation
This capability is provided for A & D Steam line PORV's only. The control stations are located in the Exterior Doghouse near their respective PORVs. The Operator must isolate VI supply from Control Room manual loader and open supply from local manual loader. Operator may now open/close PORV using the local manual loader (valves will no longer operate automatically in this mode).

Answer A Discussion

INCORRECT: See explanation above.

PLAUSIBLE: Part 1 is correct.

Part 2 is plausible if the applicant does not understand that the PORV can still be controlled by the Control Room manual loader if VI from that loader is not isolated.

Answer B Discussion

INCORRECT: See explanation above.

PLAUSIBLE: Part 1 regarding the Interior Doghouse is plausible if the applicant does not recall the location of the manual loader station.

Part 2 is plausible if the applicant does not understand that the PORV can still be controlled by the Control Room manual loader if VI from that loader is not isolated.

Answer C Discussion

CORRECT: See explanation above.

Answer D Discussion

INCORRECT: See explanation above.

PLAUSIBLE: Part 1 regarding the Interior Doghouse if plausible if the applicant does not recall the location of the manual loader station.

Part 2 is correct.

Basis for meeting the KA

The KA is matched because a Control Room Evacuation has occurred and the applicant demonstrates an ability to operate the SG PORVs (SG atmospheric relief valve) by demonstrating a knowledge of the location of the local control stations and the requirements to establish local control of the PORVs.

Basis for Hi Cog

Basis for SRO only

Job Level	Cognitive Level	QuestionType	Question Source
RO	Memory	NEW	

Development References

Learning Objective:
1) STM-SM #9

References:
1) Lesson Plan OP-MC-STM-SM Section 2.3.2
2) AP/17 Enclosure 7

Student References Provided

APE068 AA1.01 - Control Room Evacuation
Ability to operate and / or monitor the following as they apply to the Control Room Evacuation: (CFR 41.7 / 45.5 / 45.6)
S/G atmospheric relief valve .....

401-9 Comments:

Remarks/Status

401-9 Comments:

I believe the interior doghouse will be readily eliminated due to

QUESTION 62 2562 C

common knowledge. Replace B1 and D1. This Q is U due to B1 and D1 being NP

Resolution / Comments:

Believe that if we replace B1 and D1 with anything else it will be less plausible than it is right now. Open to suggestions.

Question 62 References:

From Lesson Plan OP-MC-STM-SM Section 2.3.2:

Objective #9

2.3.2 PORV's Modes of operation (Refer to STM-SM-2)

Automatic

The manual loader is normally in auto set at 100% open. Steam line pressure increases to open setting (1125 psig). Limit switch opens 3-way solenoid valve to admit VI to open the PORV.

The VI pressure must pass through the manual loader. The setting of the manual loader (normally set at 100% open) determines how far the PORV will open when/if the setpoint is reached.

When steam line pressure decreases to 1092 psig the 3-way solenoid valve repositions to vent the air pressure on the valve and blocks air pressure to the valve positioner.

Manual

Operator selects manual to admit VI to positioner. PORV will open to manual loader valve position. Prior to selecting manual, operator should close all PORV's manual loaders to prevent inadvertent operation of steam line PORV's.

Local - Manual Operation

This capability is provided for A & D Steam line PORV's only. The control stations are located in the Exterior Doghouse near their respective PORV. The Operator must isolate VI supply from Control Room manual loader and open supply from local manual loader. Operator may now open/close PORV using the local manual loader (valves will no longer operate automatically in this mode).

All the PORV's have a local valve operator extension attached to the valve actuator for true Manual operation. If the Local-Manual control station operation does not work, then the operator can manually operate the PORV. All S/G PORV manual operators are reverse acting (Clockwise to open), 2B AND 2C S/G PORVs are the exceptions which operate per the normal convention (Counter-clockwise to open).

From AP/17 Enclosure 7:

ACTION/EXPECTED RESPONSE	RESPONSE NOT OBTAINED

__ 1. **Establish communication from doghouses to SRO at Aux Shutdown panel.**

NOTE A Main Steam Isolation signal or loss of VI will prevent operation of PORVs from manual loaders.

2. **Operate valves 2SV-19AB (2A Main Steam Line PORV) and 2SV-1AB (2D Main Steam Line PORV) (exterior doghouse) using manual loaders as follows:**

   a. Ensure the following controller knobs are in the full counter clockwise position:

   __ • Manual loader 2SMML5521 (2A SM PORV (2SV-19) Local Manual Loader)

   __ • Manual loader 2SMML5491 (2D SM PORV (2SV-1) Local Manual Loader).

   b. Ensure the following valves are open:

   __ • A-1 (2A S/G Local Manual Loader Input Isol)

   __ • D-1 (2D S/G Local Manual Loader Input Isol).

   c. Close the following valves:

   __ • A-2 (2A S/G Control Room Manual Loader Output Isol)

   __ • D-2 (2D S/G Control Room Manual Loader Output Isol).

Operate the following valves PER instructions near valves:

__ • 2SV-19AB (2A Main Steam Line PORV)

__ • 2SV-1AB (2D Main Steam Line PORV).

APE069 2.4.50 - Loss of Containment Integrity
PE069 GENERIC
Ability to verify system alarm setpoints and operate controls identified in the alarm response manual. (CFR: 41.10 / 43.5 / 45.3)

Given the following conditions on Unit 1:

- The unit was operating at 100% RTP with a VQ release in progress
- A Rx Trip was manually initiated due to the 1A S/G FRV failing closed
- The resulting transient resulted in a tube rupture on the 1A S/G
- The crew has manually initiated Safety Injection
- Both trains "Cont Vent Isol Reset" lights on 1MC-11 are LIT
- 1VQ-1A (U-1 Cont Air Release Inside Isol) indicates OPEN
- No AUTO SI setpoints have been exceeded
- 1EMF 38, 39 & 40 readings have remained less than Trip 2 values

Based on these conditions, the Containment Ventilation Isolation Reset Lights should be __(1)__ AND the Operators shall __(2)__.

Which ONE (1) of the following completes the statements above?

A. 1. DARK
   2. close 1VQ-1A

B. 1. DARK
   2. verify 1VQ-1A remains OPEN

C. 1. LIT
   2. close 1VQ-1A

D. 1. LIT
   2. verify 1VQ-1A remains OPEN

General Discussion

The question is providing a set of conditions where a Manual SI has been initiated but there has been no Auto SI or Phase B setpoints exceeded. A Containment Isolation signal (Sh) is generated by anyone of the 4 following signals: Safety Injection, Manual Phase A, Manual Phase B, and a Trip 2 on EMF-38, 39, or 40. Since a Ss signal has been generated there should have been a Sh signal as well and the Sh reset lights should be dark. 1VQ-1 closes on a Sh signal and should be closed in the scenario given in the stem of the question.

Answer A Discussion

CORRECT: See explanation above.

Answer B Discussion

INCORRECT: See explanation above.

PLAUSIBLE: First part of the answer is correct.

The second part is plausible if the applicant confuses the signals which will close this valve. One of the initiating signals which will generate and Sh signal is a "Manual Phase B".

Answer C Discussion

INCORRECT: See explanation above.

PLAUSIBLE: The first part is plausible if the applicant confuses a manual SI with the other manual isolation signals which will generate an Sh. The list of signals only lists a SI signal and doesn't differentiate between manual or Auto.

The second part of the answer is correct.

Answer D Discussion

INCORRECT: See explanation above.

PLAUSIBLE: The first part is plausible if the applicant confuses a manual SI with the other manual isolation signals which will generate an Sh. The list of signals only lists a SI signal and doesn't differentiate between manual or Auto.

The second part is plausible if the applicant confuses the signals which will close this valve. One of the initiating signals which will generate an Sh signal is a "Manual Phase B".

Basis for meeting the KA

The K/A is matched because the applicant must demonstrate the ability to verify that the containment ventilation isolation Train A and Train B reset lights are indicating correctly for given plant conditions and what control board actions is to be taken in response. The scenario given represents a loss of containment integrity.

Basis for Hi Cog

This is a hi cog question because it involves a level of analysis of given situation, apply system knowledge and solve a problem.

Basis for SRO only

Job Level	Cognitive Level	QuestionType	Question Source
RO	Comprehension	NEW	

Development References

Lesson Plan OP-MC-ECC-ISE Page 19 (Rev 31)
Lesson Plan OP-MC-CNT-VQ Page 13 (Rev 18)
Lesson Plan OP-MC-CNT-VQ Page 31 (Rev 18)

OP-MC-ECC-ISE Obj: 5
OP-MC-CNT-VQ Obj: 5

Student References Provided

APE069 2.4.50 - Loss of Containment Integrity
E069 GENERIC
Ability to verify system alarm setpoints and operate controls identified in the alarm response manual. (CFR: 41.10 / 43.5 / 45.3)

401-9 Comments:

Remarks/Status

401-9 Comments:

Suggestion:
Change A2 and D2 to "verify 1VQ-1A remains open" to make these a little more plausible.

Resolution / Comments:

Revised question per Lead Examiner's recommendation. Also, changed first "should" to "will" and second "should" to "shall" in the stem of the question per Lead Examiner's General Comments. See attached file for revised question.

Question 63 References:

OP-MC-ECC-ISE Obj: 5

OBJECTIVES

	OBJECTIVE	NLO	NLOR	LPRO	LPSO	LOR
1	State the purpose of the Engineered Safeguards System.	X	X	X	X	
2	Explain the need and reasoning behind the redundancy requirements for two trains of safety related systems.	X	X	X	X	
3	State how the operator would be aware if more than one protection cabinet door was opened simultaneously.			X	X	X
4	Define the following terms: S_s, S_t, S_P, S_H	X	X	X	X	
5	List the conditions that will initiate the following: • Safety Injection (S_s) • Phase "A" Isolation (S_t) • Containment Spray/Phase "B" Isolation (S_P) • Containment Ventilation Isolation (S_H) • Main Steam Isolation (MSI) • Main Feedwater Isolation (FWI) • VE (Annulus Ventilation) System Start • H_2 Skimmer and Air Return Fan Start (VX)	X	X			
6	List all Safety Injection (S_s) actuation signals, setpoints, logic, and the type of accident each signal provides protection for.	X	X	X	X	X
7	List the pumps that automatically start following a safety injection actuation.	X	X	X	X	X
8	State which Safety Injection (S_s) signal can be blocked.	X	X	X	X	X
9	Explain the reason for blocking a Safety Injection (S_s) signal.	X	X	X	X	X
10	List the interlock and parameter setpoint that allows blocking Safety Injection (S_s).	X	X	X	X	X
11	Describe the operator action needed to block Safety Injection.			X	X	X
12	List the conditions that allow RESET of Safety Injection.			X	X	X

OBJECTIVES

	OBJECTIVE	NLO	NLOR	LPRO	LPSO	LOR
1	State the purpose of the Containment Air Release and Addition System (VQ).	X	X	X	X	
2	Draw the VQ System per Drawing 7.1 and/or describe the flow path for addition and release.	X	X	X	X	
3	Describe the normal operating conditions which will result in containment pressure increases or decreases (excluding primary and secondary leaks).	X	X	X	X	
4	State why air removal is from lower containment and air addition is to upper containment.	X	X	X	X	
5	State which signal will isolate the VQ System.	X	X	X	X	X
6	Describe the Control Room instrumentation and controls associated with the VQ System.			X	X	X
7	Given a limit and/or precaution associated with the VQ System, discuss it's basis and when it applies.	X	X	X	X	X
8	State the differences between a VQ release with the totalizer operable versus a release with the totalizer inoperable.			X	X	X

From Lesson Plan OP-MC-ECC-ISE Page 19 (Rev 31)

Objective # 5

Containment Ventilation Isolation (S_H)

* *Safety Injection (S_S)*
* *Manual Phase "A" (S_t)*
* *Manual Phase "B"*
* *Trip 2 on EMF-38, 39, or 40*

Main Steam Isolation (MSI)

* *Hi Hi Containment Pressure (S_p)*
* *Low Steamline Pressure*
* *High Steamline Pressure rate of decrease (below P-11 with Lo Press Stm Line Isol blocked)*
* *Manual*

Main Feedwater Isolation (FWI)

* *Safety Injection (S_S)*
* *Reactor Trip and Low T-avg*
* *High High S/G Level*
* *Manual*

VE (Annulus Ventilation) System Start

* *Hi Hi Containment Pressure (S_p)*
* *Manual*

H_2 Skimmer and Air Return Fan Start (VX)

Hi Hi Containment Pressure (S_p)

CPCS

10 minute time delay

2.0 COMPONENT DESCRIPTION

2.1 PAC Filters

The VQ filters are PAC filters. The Particulate section removes large particles. The Absolute section removes small particulate while the Charcoal section removes iodine. A local pressure gauge to indicate D/P across the filters is checked on the Unit #2 Auxiliary Building rounds sheets for the 767' elevation. A satisfactory reading is less than or equal to 3.4 inches WC. When a filter D/P reaches 6.0 inches WC, the other filter is placed in service. Normally only one filter is in service at a time.

2.2 Valves

Objective # 5

VQ-1A (Inside) and **VQ-2B** (outside) "Containment Air Release Isolation" valves are air operated diaphragm valves operated from the Control Room on MC-11 to align the release flow path. This valve will fail closed on a loss of air. These valves will auto close on an S_H (Containment Ventilation Isolation) signal. Note that an automatic or manual safety injection will generate a containment ventilation isolation signal.

VQ-3 "Containment Air Addition Inlet from Auxiliary Building Isolation Valve" is a piston operated gate valve. This valve is manually opened with VQ-6A and VQ5B on a -0.20 psig Containment pressure signal to allow air to be drawn in from the Auxiliary Building. VQ-3 fails closed on a loss of air.

Objective #6

VQ-4 "Containment Air Release to Unit Vent" is an air operated gate valve which has a manually operated loader with open/close indication located on MC-9 **(refer to Drawing 7.3)**. This valve is adjusted to control the release rate. This valve will fail closed on a loss of air.

VQ-5B(outside) and **VQ-6A**(inside) "Containment Air Addition Isolation" valves are air operated diaphragm valves operated from the Control Room on MC-11 to align the flow path for air addition. This valve will fail closed on a loss of air. These valves will auto close on an S_H (Containment Ventilation Isolation) signal. Note that an automatic or manual safety injection will generate a containment ventilation isolation signal.

From Lesson Plan OP-MC-CNT-VQ Page 31 (Rev 18)

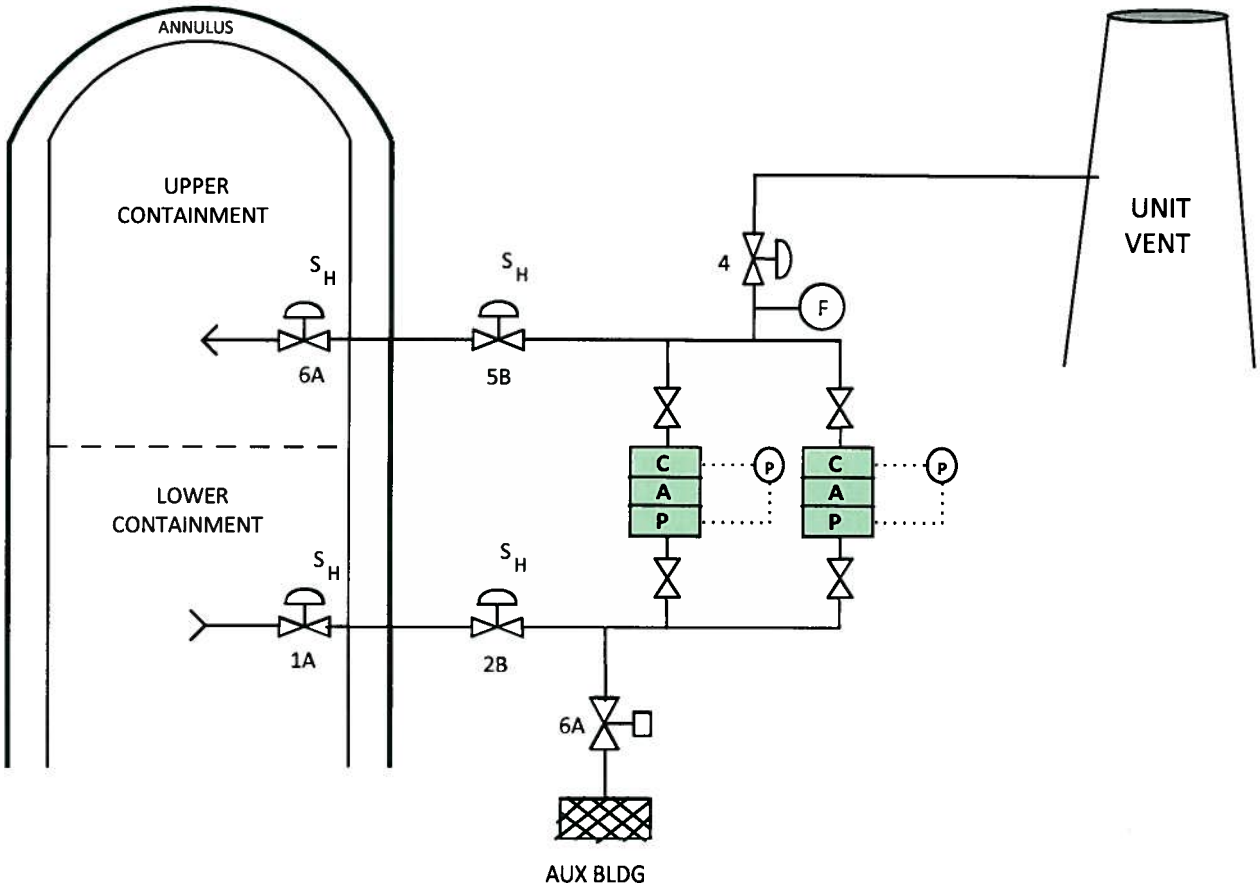

2010 MNS SRO NRC Examination QUESTION 64

2564

D

EPE074 EA2.01 - Inadequate Core Cooling

bility to determine or interpret the following as they apply to a Inadequate Core Cooling : (CFR 43.5 / 45.13)

ubcooling margin .....

Which ONE of the following will generate a LOSS OF SUBCOOLING (AD2-D5) annunciator in the Control Room?

A. 2°F subcooling on Loop A T_H

B. 0°F subcooling on Loop B T_H

C. 2°F subcooling on Loop C T_H

D. 0°F subcooling on Loop D T_H

General Discussion

The Loss of Subcooling (AD2 / D5) annunciator alarms if sublcooling decreases to 0°F subcooling on Loop D Thot.

Answer A Discussion

INCORRECT: See explanation above.

PLAUSIBLE: This answer is plausibe because the SUBCOOLING MARGIN ALERT (AD2 / D4) annunciator alarms at 2°F subcooling and it is sensed from Thot, just a different loop.

Answer B Discussion

INCORRECT: See explanation above.

PLAUSIBLE: This answer is plausible because 0°F subcooling is correct and it is sensed from Thot, just a different loop.

Answer C Discussion

INCORRECT: See explanation above.

PLAUSIBLE: This answer is plausibe because the SUBCOOLING MARGIN ALERT (AD2 / D4) annunciator alarms at 2°F subcooling and it is sensed from Thot, just a different loop.

Answer D Discussion

CORRECT: See explanation above.

Basis for meeting the KA

The KA is matched because the applicant determine the subcooling margin based on the knowledge of the annunciator alarm that is received.

Basis for Hi Cog

Basis for SRO only

Job Level	Cognitive Level	QuestionType	Question Source
RO	Memory	BANK	MNS Bank Q ICICM048

Development References

Lesson Plan OP-MC-IC-ICM page 33: (Rev 16)
Lesson Plan OP-MC-IC-ICM page 33: (Rev 16)

OP-MC-IC-ICM Obj: 9,10

Student References Provided

EPE074 EA2.01 - Inadequate Core Cooling
Ability to determine or interpret the following as they apply to a Inadequate Core Cooling : (CFR 43.5 / 45.13)
Subcooling margin .....

401-9 Comments:

Remarks/Status

401-9 Comments:

It is common knowledge that (-) WRT subcooling means subcooling is lost,
A and C are NP.
This Q is U because of two NP distractors

Resolution / Comments:

Chose replacement question. See attached file for proposed replacement.

Question 64 References:

OP-MC-IC-ICM Obj: 9,10

OBJECTIVES

SEQ	OBJECTIVE	NLO	NLOR	LPRO	LPSO	LOR
9	Describe the Subcooling Margin Monitor Function of the ICCM in terms of: • Parameters used to determine subcooling margin for each train • Indication provided • Instrument uncertainty correction • Range of indication • Alarms provided ICICM009		X	X	X	X
10	Interpret the meaning of positive, negative and zero indicated subcooling margin. ICICM010		X	X	X	X

From Lesson Plan OP-MC-IC-ICM page 33: (Rev 16)

2.3 Subcooling Margin Monitor

Objective # 9

This monitor calculates and displays the subcooling margin of the average of the 5 highest T/Cs and two loop wide range T_h and provides alarms for approaching and loss of subcooling.

The monitor calculates subcooling using the equation:

$$\text{Subcooling} = T_{sat} - T_{measured}$$

This comparison is made for:

- (T_{sat} - T/C 5 highest) = subcooling based on the average of 5 highest core exit T/Cs)
- (T_{sat} - T_h) = subcooling based on loop wide range T_h

The monitor determines T_{sat} by using wide range loop pressure and then adjusts the value for instrument error associated with the pressure and temperature instruments. The results is a saturation curve similar to the Data Book Curve which the operator uses if the instrument is inoperable. There are provisions for increasing the instrument error in the event containment pressure increases above 3 psig (S_P). This provision is <u>not used at present</u> since the pressure transmitters are located outside containment and would not be exposed to a hostile environment.

Inputs to the subcooling monitor are: (refer to Drawing 7.2)

- wide range loop pressure (loop "D" for Train A ICCM and loop "C" for Train B) from the 7300 Process Control System.
- average of the 5 highest T/Cs from the core exit thermocouple monitor calculation
- wide range Th (Train A ICCM uses loops "C" and "D" while Train B uses loops "A" and "B") from the 7300 Process Control System
- phase B contact is used to indicate that containment pressure is greater than 3 psi. This provides the monitor with the capability of changing the T_{sat} curve to account for post accident instrument uncertainty however, this function is not used since the displayed curves are the post-accident values.

The subcooling monitor provides the following Control Room Annunciators:

1) <u>Subcooling Margin Alert</u> (AD2-D4) This alarm is driven by the train A ICCM only. It will alarm under the following conditions:
   - 2^0F subcooling from average of 5 T/Cs or either WR Th
2) <u>Loss of Subcooling</u> (AD2-D5) This alarm is driven by the train A ICCM only. It will alarm under the following condition:
   - 0^0F subcooling from the average of the 5 highest T/Cs or, 0^0F subcooling from either WR T_h

From Lesson Plan OP-MC-IC-ICM page 33: (Rev 16)

Objective # 10

The subcooling monitor has a range of -35^{0}F to +200^{0}F. A positive subcooling margin indicates the coolant is below the saturation temperature (subcooling of the coolant by the number of ^{0}F indicated). A negative subcooling margin indicates the coolant is above the saturation temperature (super heated). The numerical value indicates the degrees of super heat. However, since the range only goes to -35^{0}F, steam superheated greater than 35^{0}F will still only read -35^{0}F. This could lead the operator to erroneously assume that the transient has stabilized. In this situation, the operator should refer to the core exit T/C temperature to see if superheat is still increasing. 0^{0}F subcooling indicates the coolant is at saturation (possible two phase mixture).

2.4 Control Room Display

2.4.1 Controls and General Description

Objective # 11

The ICCM information is displayed on two independent displays (one per train) located on MC-2 (refer to Drawing 7.3). The displays are microprocessor based receiving their data from the ICCM cabinets located in the cable spreading room. The processed data is displayed on the plasma display screens and is updated every 2 seconds. In the event the processor fails, the data will be stored in non-volatile memory and the display freezes as it was at the time of failure. If the failure lasts longer than 10 seconds, a Data Link Failure page will be displayed (refer to Drawing 7.24) and the associated train annunciator " ICC MONITOR TRN A(B) TROUBLE" on 1(2)AD2-E6 will be in alarm.

There are three components for each display system.

1. the electronics package mounted on the floor behind the control boards
2. the plasma display
3. the key pad

Nomenclature:	SUBCOOLING MARGIN ALERT	Window:	D4

Setpoint: 2°F

> **NOTE:** Subcooling inputs are from Loops C and D Hot Leg RTDs or Incore thermocouples.

Origin: Inadequate Core Cooling Monitoring Cabinet A

Probable Cause:

- Degraded NC System pressure or excessive NC System T_{avg} for the NC System pressure that exists
- Invalid output from ICCM cabinets

Automatic Action: None

Immediate Action: IF alarm valid and subcooling decreasing, go to applicable Emergency Procedure.

Supplementary Action:

1. IF alarm invalid, fill out ICCS Control Room Alarm Data Sheet (located in the bottom drawer of the NCO Turnover Checklist File Cabinet) prior to resetting ICCM.
2. Reset ICCM from local panel in the cable spreading room (key # 98 in Work Control key locker required for cabinet access) (System will be down for 1 minute).
   A. IF alarm does NOT clear, perform the following:
      - Evaluate system operability
      - Refer to Tech Specs
      - Write a Work Request
   B. Route Data Sheet to the System Engineer.
3. IF alarm is valid due to NC System temperature and/or pressure or abnormal fuel temperature, refer to RP/0/A/5700/000 (Classification of Emergency) for classification of event.

References:

- Tech Specs
- MCM 1399.73-0016 (ICCS Tech Manual)

End of Response

Unit 1

Nomenclature: **LOSS OF SUBCOOLING** Window: **D5**

Setpoint: 0°F Subcooling

Origin: Inadequate Core Cooling Monitoring Cabinet A

> **NOTE:** Subcooling inputs are from Loops C and D Hot Leg RTDs or Incore thermocouples.

Probable Cause:

- Degraded NC System pressure or excessive NC System T_{avg} for the NC System pressure that exists
- Invalid output from ICCM cabinets

Automatic Action: None

Immediate Action: IF alarm valid and subcooling lost, go to applicable Emergency Procedure.

Supplementary Action:

1. IF alarm invalid, fill out ICCS Control Room Alarm Data Sheet (located in the bottom drawer of the NCO Turnover Checklist File Cabinet) prior to resetting ICCM.
2. Reset ICCM from local panel in the cable spreading room (key # 98 in Work Control key locker required for cabinet access) (system will be down for 1 minute).

   A. IF alarm does NOT clear, perform the following:

   - Evaluate system operability
   - Refer to Tech Specs
   - Write a Work Request

   B. Route Data Sheet to the System Engineer.

References:

- Tech Specs
- MCM 1399.73-0016 (ICCS Tech Manual)

End of Response

Parent Question:

ICICM048

1 Pt Which ONE of the following will generate a **LOSS OF SUBCOOLING** (AD2-D5) annunciator in the Control Room?

A. 2 °F subcooling on Loop A $T_{H.}$

B. 0 °F subcooling on Loop B $T_{H.}$

C. 2 °F subcooling on Loop C $T_{H.}$

D. 0 °F subcooling on Loop D $T_{H.}$

Answer 2670

D

WE09 EK3.1 - Natural Circulation Operations

Knowledge of the reasons for the following responses as they apply to the (Natural Circulation Operations)
(CFR: 41.5 / 41.10, 45.6, 45.13)

Facility operating characteristics during transient conditions, including coolant chemistry and the effects of temperature, pressure, and reactivity changes and operating limitations and reasons for these operating characteristics.

Given the following conditions on Unit 1:

- A cooldown is being performed in accordance with ES-0.2 (Natural Circulation Cooldown)
- The crew has reached the step in ES-0.2 to initiate a depressurization of the NC system
- The crew observes that 2 CRDM fans are running

1. Based on the conditions above, the depressurization _____ continue.

2. The basis, per ES-0.2 Background Document for checking the number of CRDM fans running is to _____.

Which ONE (1) of the following completes the statements above?

A. 1. can
   2. enhance natural circulation flow

B. 1. can
   2. prevent voiding in the reactor vessel head

C. 1. can NOT
   2. enhance natural circulation flow

D. 1. can NOT
   2. prevent voiding in the reactor vessel head

General Discussion

If less than 4 CRDM fans are running at Step 20 of ES-0.1 a more restrictive subcooling margin is required (>100°F instead of >50°F). This is to prevent voiding in the reactor vessel head.

Answer A Discussion

INCORRECT: See explanation above.

PLAUSIBLE: Part 1 is correct.

Part 2 is plausible because cooling the reactor vessel head provides a small benefit to enhancing natural circulation (i.e. additional head sink along with the SGs). However, the reason for having all CRDM fans in service is to maintain the temperature in the reactor vessel head area below saturation temperature during the depressurization so that a void does not form in the head.

Answer B Discussion

CORRECT: See explanation above.

Answer C Discussion

INCORRECT: See explanation above.

PLAUSIBLE: Part 1 is plausible since the step checks to see that all 4 CRDM fans are running. It is reasonable for the applicant to conclude that if less than 4 fans are running the depressurization can NOT continue. The cooldown can continue but the subcooling margin is just adjusted to be more restrictive.

Part 2 is plausible because cooling the reactor vessel head provides a small benefit to enhancing natural circulation (i.e. additional head sink along with the SGs). However, the reason for having all CRDM fans in service is to maintain the temperature in the reactor vessel head area below saturation temperature during the depressurization so that a void does not form in the head.

Answer D Discussion

INCORRECT: See explanatiion above.

PLAUSIBLE: Part 1 is plausible since the step checks to see that all 4 CRDM fans are running. It is reasonable for the applicant to conclude that if less than 4 fans are running the depressurization can NOT continue. The cooldown can continue but the subcooling margin is just adjusted to be more restrictive.

Part 2 is correct.

Basis for meeting the KA

The KA is matched because the cooldown and depressurization in ES-0.2 is a transient evolution which could result in loss of natural circulation flow if not managed according to the procedure. The number of cooling fans and subcooling margin is a limitation during the cooldown and depressurization of which the Operator must be knowledgeable.

Basis for Hi Cog

Basis for SRO only

Job Level	Cognitive Level	QuestionType	Question Source
RO	Memory	NEW	

Development References

Learning Objective:
1) EPE0006

References:
ES-0.2 Background Document (OP-MC-EP-E0)
2) ES-0.2 Natural Circulation Cooldown

Student References Provided

WE09 EK3.1 - Natural Circulation Operations
Knowledge of the reasons for the following responses as they apply to the (Natural Circulation Operations)
(CFR: 41.5 / 41.10, 45.6, 45.13)

2010 MNS SRO NRC Examination QUESTION 65

2565

B

Facility operating characteristics during transient conditions, including coolant chemistry and the effects of temperature, pressure, and reactivity changes and operating limitations and reasons for these operating characteristics.

401-9 Comments:

Remarks/Status
401-9 Comments: Stem 2: "The basis, per procedure XXX, for checking ....." Include the basis procedure to completely rule out enhancing NC flow since the distractor analysis stated that it was a small beneficial reason. ---------- Resolution / Comments: Changed question 2 to "The basis, per ES-0.2 Background Document for checking" per Lead Examiner's recommendation. See attached file for revised question.

Question 65 References:

From ES-0.2 Background Document (OP-MC-EP-E0):

STEP 19 **<u>IF</u> <u>AT</u> <u>ANY</u> <u>TIME</u> cooldown rate must be raised to greater than 50°F in an hour, <u>THEN</u> <u>GO</u> <u>TO</u> EP/1/A/5000/ES-0.3 (Natural Circulation Cooldown with Steam Void in Vessel). (Continuous Action Step)**

<u>PURPOSE:</u> To make the operator aware that, if a rapid cooldown is required, another procedure exists which allows for void formation and a continued cooldown/depressurization.

<u>BASIS:</u> From this point onward in ES-0.2, the operator has the option of changing procedures if and when he determines a need to cooldown and depressurize more quickly than at the present rate.

Procedure ES-0.3, Natural Circulation Cooldown With Steam Void In Vessel, should be used in this case.

The major factors which could require a more rapid cooldown and depressurization than ES-0.2 allows are:

1. Limited condensate storage, or
2. No CRDM fans operating.

STEP 20 **Initiate NC System depressurization:**

<u>PURPOSE</u>: To initiate depressurization of the NC system while maintaining required subcooling.

<u>BASIS:</u> The pressurizer pressure should periodically be lowered to maintain the NC and pressurizer pressure-temperature relationship in accordance with the Technical Specifications. The depressurization should be accomplished using pressurizer auxiliary spray or pressurizer PORVs, depending upon whether letdown is in service.

To prevent possible void formation in the upper head, the minimum NC subcooling based on core exit T/Cs should be maintained.

The depressurization limit is repeated prior to the actual depressurization attempt. This will reinforce the limit to the operator performing the evolution.

From ES-0.2:

ACTION/EXPECTED RESPONSE	RESPONSE NOT OBTAINED
20. **Initiate NC System depressurization:**	
__ a. Check all CRDM fans - ON.	a. Perform the following: __ 1) Maintain NC subcooling based on core exit T/Cs greater than 100°F. __ 2) **GO TO** Step 20.c.
__ b. Maintain NC subcooling based on core exit T/Cs - GREATER THAN 50°F.	
__ c. Check letdown - IN SERVICE.	c. Perform the following: __ 1) Depressurize using one Pzr PORV while maintaining required subcooling. __ 2) **GO TO** Step 21.
__ d. Depressurize using NV aux spray while maintaining required subcooling **PER** EP/1/A/5000/G-1 (Generic Enclosures), Enclosure 3 (Establishing NV Aux Spray).	
21. **Continue NC System cooldown and depressurization:**	
__ a. Maintain cooldown rate based on T-Colds - LESS THAN 50 °F IN AN HOUR.	
__ b. Maintain subcooling requirements of Step 20.	b. Perform the following: __ 1) Stop depressurization. __ 2) Restore required subcooling.
__ c. Maintain NC temperature and pressure within limits of Data Book curve 1.6.a.	

GEN2.1 2.1.25 - GENERIC - Conduct of Operations
onduct of Operations
bility to interpret reference materials, such as graphs, curves, tables, etc. (CFR: 41.10 / 43.5 / 45.12)

Given the following conditions on Unit 1:

- A Small-Break LOCA has occurred
- Attempts to mitigate the event have been unsuccessful
- Core Exit Thermocouples are 630°F and STABLE
- Subcooling is (-)5°F and STABLE
- 'A' and 'B' NC pumps have been secured
- 'C' and 'D' NC pumps are running

In order to satisfy the requirements for the Critical Safety Function for Core Cooling, which ONE (1) of the following is required Reactor Vessel D/P based on the conditions above?

REFERENCE PROVIDED

A. Train 'A' 15%, Train 'B' 15%

B. Train 'A' 15%, Train 'B' 23%

C. Train 'A' 23%, Train 'B' 15%

D. Train 'A' 23%, Train 'B' 23%

General Discussion

In the scenario given in this question, the applicant is presented with a set of conditions to evaluate in order to determine if a challenge to CSF for core cooling is being challenged. F-0 for the Core Cooling CSF requires CET, (<1200) given as 630 deg. Status of subcooling, given as (0 and stable). Status of NCP's (C & D in operation), another check of CET (<700). The next check in the evaluation of this CSF is a check of Reactor Vessel D/P. The applicant is provided a reference in order to determine this value. (F-0 Page 5 of 11). For the given pump combination, the required D/P is 15% for Train A and 23% for Train B.

Answer A Discussion

INCORRECT: See explanation above.

PLAUSIBLE: The value given for Train A is correct and therefore plausible. The value given for Train B is plausible if the applicant misreads the table and uses the value for "C" pump being secured.

Answer B Discussion

CORRECT: See explanation above.

Answer C Discussion

INCORRECT: See explanation above.

PLAUSIBLE: The value given for Train A is plausible if the applicant misreads the table and uses the value for "A" NCP being in operation. The value given for Train B is plausible if the applicant misreads the table and uses the value for the "C" NCP being secured.

Answer D Discussion

INCORRECT: See explanation above.

PLAUSIBLE: The value given for Train A is plausible if the applicant misreads the table and uses the value for the 'A' NCP being in operation. The value given for Train B is correct and therefore plausible.

Basis for meeting the KA

K/A is matched because in order to correctly answer this question, the applicant must demonstrate the ability to interpret a given table against a provided set of conditions.

Basis for Hi Cog

This question is Hi Cog because the applicant must evaluate a given set of conditions and through a multipart mental process, determine a required value against required parameters.

Basis for SRO only

Job Level	Cognitive Level	QuestionType	Question Source
RO	Comprehension	BANK	MNS Bank Q 1114

Development References
Lesson Plan OP-MC-EP-F0 Page 51 (Rev 8)
OP-MC-EP-F0 Obj 4

Student References Provided
EP/1/A/5000/F-0 Page 5 of 11

GEN2.1 2.1.25 - GENERIC - Conduct of Operations

Conduct of Operations

Ability to interpret reference materials, such as graphs, curves, tables, etc. (CFR: 41.10 / 43.5 / 45.12)

401-9 Comments:

Remarks/Status

401-9 Comments:

What reference is provided for this Q? It was not included as part of the Q.
This Q is E until verified.

Resolution / Comments:

Page from F-0 was missing from reference we provided. Added

page to reference. See attached reference material.

Question 66 References:

OP-MC-EP-F0 Obj 4

OBJECTIVES

SEQ	OBJECTIVE	NLO	NLOR	LPRO	LPSO	LOR
1	State the purpose of each of the six CSF Status Trees.			X	X	
2	Explain the priority system associated with the CSF status trees.			X	X	X
3	Explain the "Rules of Usage" for Critical Safety Function status trees.			X	X	X
4	Explain the bases for all blocks in the six Status Trees.			X	X	X

4.4 Final Plant Status

The Core Cooling Tree has defined conditions in all four color priorities as follows:

RED PATH

There are two conditions which represent an Extreme challenge to Core Cooling:

1. Core exit T/Cs are greater than 1200°F. This condition can only occur if most of the inventory has been removed from the core and heat generation is superheating the steam.
2. Core exit T/Cs are less than 1200°F, but still high enough (> 700°F) to show that superheated steam is being generated in the core, and no NC pumps are running and water level in the core is low (< 39% LR RVLIS).

These two conditions will eventually lead to a failure of the fuel/clad matrix barrier, thus it is considered an Extreme challenge.

ORANGE PATH

There are conditions which represent a Severe challenge to the fuel barrier:

Core exit T/Cs are less than 1200°F but subcooling is less than or equal to 0°F and;

At least one NC Pump is on, but vessel D/P is less than required,

OR

No NC pumps are on, core exit T/Cs are greater than or equal to 700°F, but RVLIS shows level in the vessel is greater than 39%,

OR

No NC pumps are on, core exit T/Cs are less than 700°F, vessel level is less than or equal to 39%,

YELLOW PATH

If a NC Pump is running and reactor vessel D/P is greater than required 50%, or if no NC Pumps are running, core exit T/Cs are less than 700°F, and vessel level is greater than 39%, but subcooling is less than or equal to 0°F, then the condition is considered to be not satisfied.

"REACTOR VESSEL D/P" SETPOINTS FOR DEGRADED CORE COOLING

Number of NC Pumps On	Required "REACTOR VESSEL D/P"			
	TRN A With 1A NC Pump		TRN B With 1C NC Pump	
	ON	OFF	ON	OFF
4	44%	N/A	44%	N/A
3	30%	24%	30%	24%
2	23%	15%	23%	15%
1	16%	10%	16%	10%

Parent Question MNS NRC 1114

Last NRC Exam 2005

A small break LOCA has occurred. Attempts to mitigate the event have been **unsuccessful**. Approximately one hour after the LOCA first occurred, the operators' noticed the Subcooling Margin Monitor in alarm.

Given the following conditions on the Inadequate Core Cooling Monitor plasma display:

- Core Exit Thermocouples 630 degrees
- Subcooling is 0 degrees and stable
- 'A' and 'B' Reactor Coolant Pumps have been secured
- 'C' and 'D' Reactor Coolant Pumps are running

Which one of the following is the required reactor vessel D/P?

Reference Provided

A. Train 'A' 23%, Train 'B' 23%

B. Train 'A' 23%, Train 'B' 15%

C. Train 'A' 15%, Train 'B' 23%

D. Train 'A' 15%, Train 'B' 15%

Answer 35

A

FH-KF, section 3.2

GEN2.1 2.1.26 - GENERIC - Conduct of Operations

Conduct of Operations

Knowledge of industrial safety procedures (such as rotating equipment, electrical, high temperature, high pressure, caustic, chlorine, oxygen and hydrogen). (CFR: 41.10 / 45.12)

Given the following:

- Operators are performing valve lineups on the Unit 1 Secondary
- Several valves are approximately 15 feet above the floor level

In accordance with the Nuclear Generation Department Safe Work Practices Pocket Manual, the Operators performing the manipulations can work safely using a securely placed extension ladder and _____.

Which ONE (1) of the following completes the statement above?

A. a safety belt with the lanyard attached to a nearby 6" diameter pipe

B. a full body harness with the lanyard attached to a nearby 4" diameter pipe

C. a safety belt with the lanyard attached to a nearby vertical scaffolding member

D. a full body harness with the lanyard attached to a nearby horizontal scaffolding member

---

General Discussion

In accordance with the Safe Work Practices Pocket manual, "Employees shall wear full-body harnesses for fall protection when working on nonwalking/working surfaces (i.e., pipes, beams, hangers, etc.) where a free-fall of greater than 4 ft. exists."

Anchor points must be substantial and sufficient to hold twice the weight of a falling person (≈5000 lbs.). Examples of acceptable anchor points are I-beam, piping greater than 3" in diameter, structural steel / substantial support structures, etc.

Answer A Discussion

INCORRECT: See explanation above.

PLAUSIBLE: This answer is plausibe because use of safety belts are discussed in the Safe Work Practices Pocket Manual. However, safety belts are never to be used for fall protection. Also, plausible because a pipe with a diameter of greater than 3" is an acceptable anchor point.

Answer B Discussion

CORRECT: See explanation above.

Answer C Discussion

INCORRECT: See explanation above.

PLAUSIBLE: This answer is plausibe because use of safety belts are discussed in the Safe Work Practices Pocket Manual. However, safety belts are never to be used for fall protection. Also, plausible because scaffolding can be used as an anchor point. However, vertical scaffold members can only be used when no other acceptable anchor point is available.

Answer D Discussion

INCORRECT: See explanation above.

PLAUSIBLE: This answer is plausible because a full body harness is required. The safety manual does allow the use of scaffold members as anchor points. However, only vertical scaffold members may be used and only when no other acceptable anchor point is available.

Basis for meeting the KA

The KA is matched because the applicant must have knowledge of the industrial safety requirements (specifically Fall Protection) contained in the Nuclear Generation Department Safe Work Practices Pocket Manual.

Basis for Hi Cog

Basis for SRO only

Job Level	Cognitive Level	QuestionType	Question Source
RO	Memory	NEW	

Development References

Learning Objectives:
1) N/A

References:
1) Nuclear Generation Department Safe Work Practices Pocket Manual

Student References Provided

GEN2.1 2.1.26 - GENERIC - Conduct of Operations

Conduct of Operations

Knowledge of industrial safety procedures (such as rotating equipment, electrical, high temperature, high pressure, caustic, chlorine, oxygen and hydrogen). (CFR: 41.10 / 45.12)

401-9 Comments:

Remarks/Status

401-9 Comments:

No comment.

Resolution / Comments:

QUESTION 67 2567 B

N/A

Question 67 References:

From Nuclear Generation Department Safe Work Practices Pocket Manual:

• Activating the eyewash handle briefly to verify operation.
6. In case of chemical exposure, flush skin and eyes with cool water for at least 15 minutes, DO NOT RUB!
7. Hold your eyes open with your hands while using eyewash to be sure water reaches the eyes.
8. Remove contaminated clothing after the shower has been activated.
9. Get medical assistance immediately following flushing.

Fall Protection & Walking and Working Surfaces (SWP 3.1 "Fall Protection")

General Fall Protection Requirements

1. Employees must be trained in the use of fall protection and have received the practical training.
2. When the fall prevention systems are inappropriate and fall hazards cannot be eliminated or prevented, employees shall **control** falls by using personal fall arrest systems (i.e., body harnesses, shock absorbing lanyards, self-retracting lanyards, lifelines, ladder safety devices, etc.)
3. Visually inspect fall protection equipment **before each use**.
4. Employees shall wear full-body harnesses for fall protection when working on nonwalking/ working surfaces (i.e., pipes, beams, hangers, etc.) where a free-fall of greater than 4 ft. exists.
5. Employees shall attach the lanyard as high as possible to avoid striking objects below in the event of a fall. Self-retracting lanyards are available as needed for certain jobs.

26

Note: Shock absorbing lanyards can elongate up to 3 ½ feet in a fall. This elongation distance must be considered when selecting and using a tie-off point.

6. Safety belts with lanyards shall only be used for restriction of movement or positioning. Do not use body belts for fall arrest.
7. On vertical lifelines, each worker must have a separate lifeline with a breaking strength of at least 5,000 pounds.
8. Anchor points must be substantial and sufficient to hold twice the weight of a falling person (H5000 lbs.).

• Examples of acceptable anchor points are I-beam, piping greater than 3" in diameter, structural steel / substantial support structures, etc.
• Examples of anchor points that **are not** acceptable are instrument lines, small electrical conduit (less than 4 inches in

diameter), plastic piping, valve handles, snubbers, cable trays, instrument trays, hot pipes, etc. Horizontal scaffolding members are un-acceptable and use of vertical supports are to be used only if no other accepted anchorage is available.
9. Workers working in scissors lifts shall be protected by guardrails or personal fall arrest equipment if guardrails are not installed.
10. Wear fall arrest equipment when working on top of tanker trucks or rail cars.

Ladders:

1. When ascending or descending, workers shall face the ladder, use at least one hand to grasp the ladder, and not carry anything

that could cause loss of balance or a fall.
2. Extension ladders used to access to roofs, floors, platforms, landings; scaffolds, etc. must extend at least 3 feet above the access point or be secured at the top and provided with a grasping device to assist workers in mounting and dismounting the ladder.
3. Ladders must be securely placed, held, or tied to prevent slipping and falling.
4. Working load on ladder must not exceed load limits of the ladder.
5. Stepladders are to be used only with the legs fully extended and the spreader bar locked in place. Stepladders must not be used as straight ladders.
6. The top step of stepladders must not be used, except for platform ladders that are specifically designed for that purpose.
7. A harness is **NOT** required when working from a ladder in an office environment.
8. When working greater than 4 feet off the floor from a ladder:
• Always face the ladder
• Keep your center of gravity between the rails
• Use proper fall protection if it can be done safely and an acceptable anchorage point is available.

Fire Protection/Prevention (NSWP 4.2)

Fire Prevention

1. Ensure that you know how to recognize and report hazardous conditions and fire hazards associated with the materials and processes to which employees are exposed.
2. Practice good housekeeping in all areas to prevent the accumulation of flammable and/ or combustible material.
3. Keep flammable liquids in approve

GEN2.2 2.2.25 - GENERIC - Equipment Control

Equipment Control

Knowledge of the bases in Technical Specifications for limiting conditions for operations and safety limits. (CFR: 41.5 / 41.7 / 43.2)

In accordance with Tech Spec 2.1.1 (Reactor Core Safety Limits) Bases, the proper functioning of the ___(1)___ AND ___(2)___ prevent exceeding the Departure from Nucleate Boiling Reactor Core Safety Limit.

Which ONE (1) of the following completes the statement above?

A. 1. Rod Control System
   2. Pressurizer Safety Valves

B. 1. Rod Control System
   2. Main Steam Safety Valves

C. 1. Reactor Protection System
   2. Pressurizer Safety Valves

D. 1. Reactor Protection System
   2. Main Steam Safety Valves

General Discussion

In accordance with TS 2.1.1 Basis "automatic enforcement of these core SLs is provided by the appropriate operation of the RPS and the steam generator safety valves".

Answer A Discussion

INCORRECT: See explanation above.

PLAUSIBLE: Part 1 and 2 are plausible because the Rod Control System and Pressurizer Safety Valves perform important functions with regards to plant safety and ensuring that fuel integrity is maintained. However, in the assumptions for maintaining the plant within the design safety limits the Rod Control System and Pressurizer Safety Valves are not considered.

Answer B Discussion

INCORRECT: See explanation above.

PLAUSIBLE: Part 1 is plausible because the Rod Control System performs important functions with regards to plant safety and ensuring that fuel integrity is maintained. However, in the assumptions for maintaining the plant within the design safety limits the Rod Control System is assumed to not function as designed.

Part 2 is correct.

Answer C Discussion

INCORRECT: See explanation above.

PLAUSIBLE: Part 2 is plausible because the Pressurizer Safety Valves perform an important function with regards to plant safety and ensuring that fuel integrity is maintained. However, in the assumptions for maintaining the plant within the design safety limits the Pressurizer Safety Valves are not considered.

Part 1 is correct.

Answer D Discussion

CORRECT: See explanation above.

Basis for meeting the KA

The KA is matched because the applicant must have knowledge of the Tech Spec Safety Limit basis.

Basis for Hi Cog

Basis for SRO only

Job Level	Cognitive Level	QuestionType	Question Source
RO	Memory	NEW	

Development References

Learning Objective:
1) N/A

References:
1) TS 2,0 Safety Limit Basis

Student References Provided

GEN2.2 2.2.25 - GENERIC - Equipment Control

Equipment Control

Knowledge of the bases in Technical Specifications for limiting conditions for operations and safety limits. (CFR: 41.5 / 41.7 / 43.2)

401-9 Comments:

Remarks/Status

Proposed replacement for 2010 NRC Q-68.

Revised question approved. RFA 06/07/10.

Question 68 References:

From Tech Spec 2.1.1 Basis:

BASES

B 2.0 SAFETY LIMITS (SLs)

B 2.1.1 Reactor Core SLs

BASES

BACKGROUND

GDC 10 (Ref. 1) requires that specified acceptable fuel design limits are not exceeded during steady state operation, normal operational transients, and anticipated operational occurrences (AOOs). This is accomplished by having a departure from nucleate boiling (DNB) design basis, which corresponds to a 95% probability at a 95% confidence level (the 95/95 DNB criterion) that DNB will not occur and by requiring that fuel centerline temperature stays below the melting temperature.

The restrictions of this SL prevent overheating of the fuel and cladding, as well as possible cladding perforation, that would result in the release of fission products to the reactor coolant. Overheating of the fuel is prevented by maintaining the transient peak linear heat rate (LHR) below the level at which fuel centerline melting occurs. Overheating of the fuel cladding is prevented by restricting fuel operation to within the nucleate boiling regime, where the heat transfer coefficient is large and the cladding surface temperature is slightly above the coolant saturation temperature.

Fuel centerline melting occurs when the local LHR, or power peaking, in a region of the fuel is high enough to cause the fuel centerline temperature to reach the melting point of the fuel. Expansion of the pellet upon centerline melting may cause the pellet to stress the cladding to the point of failure, allowing an uncontrolled release of activity to the reactor coolant.

Operation above the boundary of the nucleate boiling regime could result in excessive cladding temperature because of the onset of DNB and the resultant sharp reduction in heat transfer coefficient. Inside the steam film, high cladding temperatures are reached, and a cladding water (zirconium water) reaction may take place. This chemical reaction results in oxidation of the fuel cladding to a structurally weaker form. This weaker form may lose its integrity, resulting in an uncontrolled release of activity to the reactor coolant.

The proper functioning of the Reactor Protection System (RPS) and steam generator safety valves prevents violation of the reactor core SLs.

APPLICABLE SAFETY ANALYSES

The fuel cladding must not sustain damage as a result of normal operation and AOOs. The reactor core SLs are established to preclude violation of the following fuel design criteria:

a. There must be at least 95% probability at a 95% confidence level (the 95/95 DNB criterion) that the hot fuel rod in the core does not experience DNB; and

b. The hot fuel pellet in the core must not experience centerline fuel melting.

The Reactor Trip System setpoints (Ref. 2), in combination with all the LCOs, are designed to prevent any anticipated combination of transient conditions for Reactor Coolant System (RCS) temperature, RCS Flow Rate, ΔI, pressure, and THERMAL POWER level that would result in a departure from nucleate boiling ratio (DNBR) of less than the DNBR limit and preclude the existence of flow instabilities.

Automatic enforcement of these reactor core SLs is provided by the appropriate operation of the RPS and the steam generator safety valves.

The SLs represent a design requirement for establishing the RPS trip setpoints identified previously. LCO 3.4.1, "RCS Pressure, Temperature, and Flow Departure from Nucleate Boiling (DNB) Limits," or the assumed initial conditions of the safety analyses (as indicated in the UFSAR, Ref. 2) provide more restrictive limits to ensure that the SLs are not exceeded.

SAFETY LIMITS

The Figure provided in the COLR shows the loci of points of Fraction of Rated Thermal power, RCS Pressure, and average temperature for which the minimum DNBR is not less than the safety analyses limit, that fuel centerline temperature remains below melting, that the average enthalpy in the hot leg is less than or equal to the enthalpy of saturated liquid, and that the exit quality is within the limits defined by the DNBR correlation.

The reactor core SLs are established to preclude violation of the following fuel design criteria:

a. There must be at least 95% probability at a 95% confidence level (the 95 / 95 DNB criteria) that the hot fuel rod in the core does not experience DNB; and

b. There must be at least a 95% probability at a 95% confidence level that the hot fuel pellet in the core does not experience centerline fuel melting.

The reactor core SLs are used to define the various RPS functions such that the above criteria are satisfied during steady state operation, normal

2010 MNS SRO NRC Examination QUESTION 69

2569

C

GEN2.2 2.2.42 - GENERIC - Equipment Control

Equipment Control

Ability to recognize system parameters that are entry-level conditions for Technical Specifications. (CFR: 41.7 / 41.10 / 43.2 / 43.3 / 45.3)

With Unit 1 operating at 100% RTP, which ONE (1) of the following exceeds the limits of Tech Spec 3.4.13 (RCS Operational Leakage)?

A. 6 GPM identified leakage

B. 0.5 GPM unidentified leakage

C. 140 GPD tube leakage in 1C SG

D. 356 GPD total primary-to-secondary leakage through all SGs

---

General Discussion

In accordance with TS 3.4.13 the limiti on operational leakage is:

a No pressure boundary LEAKAGE;

b.1 gpm unidentified LEAKAGE;

c. 10gpm identified LEAKAGE;

d. 389 gallons per day total primary to secondary LEAKAGE through all steam generators (SGs); and

e. 135 gallons per day primary to secondary LEAKAGE through any one steam generator (SG).

Answer A Discussion

INCORRECT: See explanation above.

PLAUSIBLE: This answer is plausible if the applicant confused the unidentified and identified leakage spec because this leakage exceeds the unidentified leakage.

Answer B Discussion

INCORRECT: See explanation above.

PLAUSIBLE: This answer is plausible if the applicant confuses the unidentified leakage spec with the pressure boundary leakage spec because this exceeds the pressure boundary leakage limit.

Answer C Discussion

CORRECT: See explanation above.

Answer D Discussion

INCORRECT: See explanation above.

PLAUSIBLE: This answer is plausible if the applicant confuses the total primary to secondary leakage spec with the leakage through one SG because this exceeds the allowable leakage through 1 SG.

Basis for meeting the KA

The KA is matched because the applicant must know the limits for RCS Operational Leakage which constitute entry conditions for Tech Spec 3.4.13.

Basis for Hi Cog

Basis for SRO only

Job Level	Cognitive Level	QuestionType	Question Source
RO	Memory	BANK	MNS Exam Bank Q# PSNC066

Development References

REFERENCE T.S. 2.0 safety limits.

Student References Provided

GEN2.2 2.2.42 - GENERIC - Equipment Control

Equipment Control

Ability to recognize system parameters that are entry-level conditions for Technical Specifications. (CFR: 41.7 / 41.10 / 43.2 / 43.3 / 45.3)

401-9 Comments:

Remarks/Status

401-9 Comments:

No comment.

QUESTION 69 2569 C

Resolution / Comments:

N/A

Question 69 References:

From TS 3.4.13:

3.4 REACTOR COOLANT SYSTEM (RCS)

3.4.13 RCS Operational LEAKAGE

LCO 3.4.13 RCS operational LEAKAGE shall be limited to:

a. No pressure boundary LEAKAGE;

b. 1 gpm unidentified LEAKAGE;

c. 10 gpm identified LEAKAGE;

d. 389 gallons per day total primary to secondary LEAKAGE through all steam generators (SGs); and

e. 135 gallons per day primary to secondary LEAKAGE through any one steam generator (SG).

APPLICABILITY: MODES 1, 2, 3, and 4.

ACTIONS

CONDITION	REQUIRED ACTION	COMPLETION TIME
A. RCS Operational LEAKAGE not within limits for reasons other than pressure boundary LEAKAGE or primary to secondary LEAKAGE.	A.1 Reduce LEAKAGE to within limits.	4 hours
B. Required Action and associated Completion Time of Condition A not met. OR Pressure boundary LEAKAGE exists. OR Primary to secondary LEAKAGE not within limits.	B.1 Be in MODE 3. AND B.2 Be in MODE 5.	6 hours 36 hours

PARENT QUESTION:

PSNC066

1 Pt

Which ONE (1) of the following NCS leak rates at normal operating pressure and temperature is <u>within</u> allowable limits for continued operations per the plant Technical Specifications? (Consider each leak rate separately; assume there is NO concurrent leakage; assume unit in Mode 1).

A. 2 gpm unidentified leakage.

B. 1 gpm identified leakage from 1NV-6 to the PRT.

C. 394 gpd total steam generator tube leakage.

D. 9 gpm identified seat leakage thru RHR suction isolation valve 1 ND-1B and 1 ND-2A to the RHR system.

Answer 667

B

T.S. 3.4.13 and 3.4.14.

Distracter "D" is PIV leakage, maximum per T.S. 3.4.14 is 5 gpm.

KA Nos. / Importance - 002G2.1.33 / RO 3.4, SRO 4.0

GEN2.3 2.3.14 - GENERIC - Radiation Control

Radiation Control

Knowledge of radiation or contamination hazards that may arise during normal, abnormal, or emergency conditions or activities. (CFR: 41.12 / 43.4 / 45.10)

Given the following conditions on Unit 1:

- The NV system is being aligned for startup
- The procedure being used calls for independent verification of a single valve located in a room with a general dose rate of 130 mREM/hr
- Estimated time to independently verify the valve's position is 10 minutes
- There are no known hot spots in the area
- There is no airborne activity in this room
- The room has no surface contamination areas
- Assume any necessary approvals are obtained

In accordance with NSD 700 (Verification Techniques), independent verification of the valve above __(1)__ be waived because __(2)__.

Which ONE (1) of the following completes the statement above?

A. 1. may
   2. the general area dose rate is greater than 100 mREM/hr

B. 1. may NOT
   2. the general area dose rate is less than 1 REM/hr

C. 1. may
   2. the radiation exposure for a single verification would exceed the allowable limit

D. 1. may NOT
   2. the radiation exposure for a single verification is within the allowable limit

---

General Discussion

According to NSD-700, Independent and/or Concurrent Verification may be waived if the exposure to an individual of greater than 10 mrem for a single verification would occur or if dose rate in the room is >1 R/hr. This waiver requires supervisory approval and documentation.

Answer A Discussion

INCORRECT. See explanation above.

PLAUSIBLE: This answer is plausible because per NSD 700, IV may be waived when dose rate in an area is greater than 1 R/hr, not 100mR /hr.

Answer B Discussion

INCORRECT. See explanation above.

PLAUSIBLE: This answer is plausible because per NSD 700, IV may be waived when dose rate in an area is greater than 1 R/hr. This statement is a true statement, but does not correctly answer the question because another limit (> 10mr for one IV) is met.

Answer C Discussion

CORRECT. The total exposure would be 21.7 mR which exceeds the dose limit of 10mR for a single verification.

Answer D Discussion

INCORRECT. See explanation above.

PLAUSIBLE: This answer is plausible if the applicant does not recall the guideline of 10 mrem for a single verification criteria or miscalculates the potential exposure.

Basis for meeting the KA

This KA is met because the applicant must evaluate a potential exposure hazard and determine which requirement applies to that potential exposure.

Basis for Hi Cog

This is an analysis question because the applicant is required to calculate the potential exposure and then apply a limit recalled from memory to correctly answer the question.

Basis for SRO only

Job Level	Cognitive Level	QuestionType	Question Source
RO	Comprehension	BANK	2009 MNS RO Retake Q72 (Bank 1671)

Development References	Student References Provided
NSD700	

GEN2.3 2.3.14 - GENERIC - Radiation Control

Radiation Control

Knowledge of radiation or contamination hazards that may arise during normal, abnormal, or emergency conditions or activities. (CFR: 41.12 / 43.4 / 45.10)

401-9 Comments:	Remarks/Status
	401-9 Comments: Change "can" and "cannot" to "may" and "may not." Can refers to ability, may refers to permission. ---------- Resolution / Comments: Changed question per Lead Examiner's recommendation. See attached file for copy of revised question.

Question 70 References:

From NSD 700 (Verification Techniques):

700.8 EXCEPTIONS

Independent and/or Concurrent Verification may be waived under any of the following situations with appropriate supervisory approval and documentation:

1. If it would result in a significant personnel radiation exposure as defined below:
   a. Individual radiation exposure of greater than 10 mrem for a single verification.
   b. Access to an area with a dose rate equal to or greater than 1 rem/hour.
   c. Procedures containing several verification steps, each with high exposures but less than the above exposure limits should be considered for being waived if exposure from verification would exceed 100 mrem per week.
2. In situations that present a significant personnel safety risk.
3. If valves perform a safety function which receive an automatic signal to move to their proper safety position, unless these valves are removed from operability in a manner that would prevent automatic actuation.
4. General vent and drain valves which would NOT prevent a safety-related system from performing its safety function.
5. Under emergency conditions.

GEN2.3 2.3.14 - GENERIC - Radiation Control

Radiation Control

Knowledge of radiation or contamination hazards that may arise during normal, abnormal, or emergency conditions or activities. (CFR: 41.12 / 43.4 / 45.10)

After realigning the NV system for startup, a valve located in a high radiation area requires independent verification.

Given the following conditions:

- General area radiation levels are 130 MREM / hr
- Estimated time to independently verify the position is 10 minutes
- There are no known hot spots in the area
- There is no airborne activity in this room
- The room has no surface contamination areas

What are the ALARA requirements related to waiving the independent verification of this valve per NSD 700 (Verification Techniques)?

A. Independent verification may be waived for all valves in high radiation areas until after shutdown.

B. Independent verification may NOT be waived until General Area radiation levels are reduced to less than 100 MREM / hr.

C. Independent verification may be waived because the exposure to the operator exceeds ALARA guidelines.

D. Independent verification may NOT be waived because exposure to the operator will be within ALARA guidelines.

General Discussion

According to NSD-700, Independent and/or Concurrent Verification may be waived if the exposure to an individual of greater than 10 mrem for a single verification would occur. This waiver requires supervisory approval and documentation.

This KA is met because the applicant must evaluate a potential exposure hazard and determine which requirement applies to that potential exposure.

This is an analysis question because the applicant is required to calculate the potential exposure and then apply a limit recalled from memory to correclty answer the question.

Answer A Discussion

Incorrect. Plausible because IV in a high radiation could potentially exceed the 10 mrem guidance for a single exposure. However, IV cannot be waived simply because the component is in a High Radiation Area.

Answer B Discussion

Incorrect. Plausible if the applicant believes that independent verification can not be waived in areas with radiation levels above 100 MREM / hr.

Answer C Discussion

CORRECT.

Answer D Discussion

Incorrect. Plausible if the applicant does not recall the guideline of 10 mrem for a single verification criteria or miscalculates the potential exposure.

Basis for meeting the KA

Basis for Hi Cog

Basis for SRO only

Job Level	Cognitive Level	QuestionType	Question Source
RO	Comprehension	BANK	MNS Bank Question ADMOMPN036

Development References

NSD 700 Verification Techniques page 9 (previously OMP 8-2 Verification Techniques) and Lesson Plan OP-MC-ADM-OMP objective 22 related to OMP 8-2. OMP 8-2 was deleted in April 2009 and the ADM-OMP Lesson Plan has not yet been revised to make the change to NSD 700. However, the applicants would have been responsible for the requirements of OMP 8-2 and those requirements did not change with NSD 700.

Student References Provided

GEN2.3 2.3.14 - GENERIC - Radiation Control

Radiation Control

Knowledge of radiation or contamination hazards that may arise during normal, abnormal, or emergency conditions or activities. (CFR: 41.12 / 43.4 / 45.10)

401-9 Comments:

G2.3.14
Distracter A is weak. This is too important of an evolution to be evaluated and approved by an NLO.
Replace A.
Distracter C: State a reason instead of "under these conditions"
RFA 10/29/09

Remarks/Status

Per Chief Examiner's recommendation, replaced distractor 'A'. Changed distractor 'C' to state a reason instead of "under these conditions". Rearranged answers for psychometric balance (B to A, A to B, D to C, C to D) making 'C' the correct answer.

GEN2.3 2.3.5 - GENERIC - Radiation Control

Radiation Control

Ability to use radiation monitoring systems, such as fixed radiation monitors and alarms, portable survey instruments, personnel monitoring equipment, etc. (CFR: 41.11 / 41.12 / 43.4 / 45.9)

Regarding the use of Electronic Dosimeters (ED):

- If a DOSE alarm setpoint is exceeded, the alarm will __(1)__.
- If a DOSE RATE alarm setpoint is exceeded, the alarm will __(2)__.

Which ONE (1) of the following completes the statements above?

A. 1. not clear until the ED is reset
   2. clear when the dose rate drops below the alarm setpoint

B. 1. not clear until the ED is reset
   2. not clear until the ED is reset

C. 1. automatically clear after 10 seconds
   2. clear when the dose rate drops below the alarm setpoint

D. 1. automatically clear after 10 seconds
   2. not clear until the ED is reset

General Discussion

This information comes from NSD 507 (Radiation Protection). This is not taught during Generic Rad Worker Training. It is covered during Admin Procedure training in Operator License training.

Electronic Dosimeter (ED) Alarms

ED Dose and Dose Rate Alarms - EDs are programmed during log-on to alarm at a predetermined dose and dose rate. The alarm setpoints are specified by the RWP. The alarm setpoints can be viewed during EDC log-on and they are also located on the RWP. Set points can also be viewed any time after logging on to EDC by pressing and holding the Dose/Dose Rate toggle switch on the ED for 10 seconds. The alarm setpoints and stay time will be displayed and then will automatically return to dose monitoring mode. The dose alarm consists of an audible alarm and a visual alarm. If the dose setpoint is exceeded the dose alarm will sound and a red light will flash on the ED. The audible alarm and the flashing red light will not stop until the ED is reset. The dose rate alarm automatically resets when the dose rate drops below the alarm setpoint. The ED display will indicate the type of alarm. The ED is also programmed to alarm when it is activated for 16 hours or when RWP specific stay time is exceeded.

Answer A Discussion

CORRECT. See explanation above.

Answer B Discussion

INCORRECT. See explanation above.

PLAUSIBLE: Part 1 is correct.

Part 2 is plausible because that is how the DOSE alarm works.

Answer C Discussion

INCORRECT. See explanation above.

PLAUSIBLE: Part 1 is plausible because the 10 seconds is associated with using the DOSE/DOSE RATE toggle switch to view the alarm setpoints.

Part 2 is correct.

Answer D Discussion

INCORRECT. See explanation above.

PLAUSIBLE: Part 1 is plausible because the 10 seconds is associated with using the DOSE/DOSE RATE toggle switch to view the alarm setpoints.

Part 2 is plausible because this is how the dose alarm works.

Basis for meeting the KA

The KA is matched because the applicant must be familiar with how the ED alarms works to be able to use an Electronic Dosimeter correctly.

Basis for Hi Cog

Basis for SRO only

Job Level	Cognitive Level	QuestionType	Question Source
RO	Memory	NEW	

Development References

Learning Objectives:
1) RAD-RP#38

References:
1) NSD 507 Section 507.7.3

Student References Provided

2010 MNS SRO NRC Examination QUESTION 71

2571

A

GEN2.3 2.3.5 - GENERIC - Radiation Control

Radiation Control

Ability to use radiation monitoring systems, such as fixed radiation monitors and alarms, portable survey instruments, personnel monitoring equipment, etc. (CFR: 41.11 / 41.12 / 43.4 / 45.9)

401-9 Comments:

Remarks/Status
401-9 Comments: No comment. ---------- ---------- Resolution / Comments: N/A

Question 71 References:

From NSD 507:

to deactivate the ED after each exit but will deactivate ED at end of shift and return it to storage rack before leaving site.

☐ Complete and turn-in Dose Card even if no dose was received during the entry.

☐ Contact RP regarding problems.

507.7.3 EXPOSURE MONITORING WARNING FLAGS/ALARMS

A. Radiation Monitoring and Control System Flags

To ensure individuals do not exceed dose limits, the EDC computer program provides the following flags as individuals approach their established dose limit:

Alert Flag - Notification that individual reached 80% or greater, but less than 90%, of established administrative limit. Individual should notify his/her supervisor. Individual must receive RP supervision approval to enter a High Radiation Area or Locked High Radiation Area.

Exclude Flag - Notification that individual reached 90% or greater of established administrative limit. Individual may not enter the RCA/RCZ until he/she receives a dose extension approved by the Radiation Protection Manager (RPM).

B. Electronic Dosimeter (ED) Alarms

ED Dose and Dose Rate Alarms - EDs are programmed during log-on to alarm at a predetermined dose and dose rate. The alarm setpoints are specified by the RWP. The alarm setpoints can be viewed during EDC log-on and they are also located on the RWP. Set points can also be viewed any time after logging on to EDC by pressing and holding the Dose/Dose Rate toggle switch on the ED for 10 seconds. The alarm setpoints and stay time will be displayed and then will automatically return to dose monitoring mode. The dose alarm consists of an audible alarm and a visual alarm. If the dose setpoint is exceeded the dose alarm will sound and a red light will flash on the ED. The audible alarm and the flashing red light will not stop until the ED is reset. The dose rate alarm automatically resets when the dose rate drops below the alarm setpoint. The ED display will indicate the type of alarm. The ED is also programmed to alarm when it is activated for 16 hours or when RWP specific stay time is exceeded.

☐ If regular monitoring of the ED indicates that the dose alarm set-point will be exceeded prior to completing the job, leave the area and contact RP. Do not wait to receive an alarm before exiting the area.

☐ For some high dose-rate jobs, RP may ask you to exit the work area when the ED accumulates 80% of the dose alarm set-point.

☐ **If the ED dose alarm sounds, immediately inform co-workers, exit the RCA/RCZ and call RP**. Reentry is not permitted until the alarm is cleared by RP.

☐ ED dose-rate alarms may be anticipated by RP due to higher dose rates in the travel path to the work location **OR** a worker being in close proximity to a radiation source. Anticipated dose rate alarms shall be discussed during RP brief prior to beginning work. Work can continue following a travel path dose rate alarm providing the alarm clears prior to arriving at the work location. For anticipated dose rate alarms due to proximity to a radiation source, work may continue for no more than two dose rate alarms. **If** a third anticipated dose rate alarm is received, stop work and notify RP immediately. For unanticipated dose rate alarms (any dose rate alarm that is **NOT** briefed by RP prior to beginning work) immediately stop work and contact RP.

☐ Notify RP prior to entering RCA or RCZ if you have trouble hearing audible ED alarms. Alternate alarm indicators will be provided.

☐ If the ED malfunctions, immediately exit the RCA/RCZ and call/report to RP with problem ED.

GEN2.3 2.3.7 - GENERIC - Radiation Control

adiation Control

bility to comply with radiation work permit requirements during normal orabnormal conditions. (CFR: 41.12 / 45.10)

Given the following conditions on Unit 1:

- The unit has experienced several fuel pin failures
- You have been directed to tag out the 1B NI pump
- The 1B NI pump room general area is 400 mREM/hr
- To reach the 1B NI pump room you must transit through a 6 REM/hr high radiation area for 2 minutes and return via the same route
- Your current accumulated annual dose is 1000 mREM
- An RWP has been written for this job which has your Electronic Dosimeter (ED) alarm set for your EXCLUDE exposure limit

Based on the conditions above, what is your MAXIMUM allowable stay-time in the 1B NI pump room for hanging the tagout to prevent your ED from alarming before you exit the RCA?

A. 30 minutes

B. 1 hour

C. 1.5 hours

D. 2 hours

General Discussion

The Exclusion flag exposure limit is 90% of the 2000 mREM admin limit = 1800 mREM.

The transit exposure is 400 mREM (6000 mREM/hr x 4/60 hr) during transit to and from the job.

The allowable exposure before reaching the Exclusion flag exposure limit is equal to the limit minus the transit exposure and the total annual exposure to date.
(1800 mRem - 400 mREM - 1000 mREM = 400 mREM)

Therefore, the allowable stay time in the 2B NI pump room is 1 hour.

Answer A Discussion

INCORRECT: See explanation above.

PLAUSIBLE: This answer is plausible if the applicant uses the ALERT exposure limit which would be 80% of the annual admin limit. The ALERT limit would be 1600 mREM which would make 30 minutes the correct answer.

Answer B Discussion

CORRECT: See explanation above.

Answer C Discussion

INCORRECT: See explanation above.

PLAUSIBLE: This answer is plausible if the applicant uses the correct Exclude exposure limit but only calculates the transit exposure in one direction. This would be the correct answer.

Answer D Discussion

INCORRECT: See explanation above.

PLAUSIBLE: This answer is plausible if the applicant uses the admin exposure limit and only calculates the transit exposure in one direction. This would be the correct answer.

Basis for meeting the KA

The KA is matched because the applicant must be able to determine stay-time in order to comply with RWP requirements.

Basis for Hi Cog

This is a higher cognitive level question because the applicant must calculate the stay-time based on given information.

Basis for SRO only

Job Level	Cognitive Level	QuestionType	Question Source
RO	Comprehension	MODIFIED	MNS Exam Bank Question RADRPN03

Development References

Learning Objectives:
1) RAD-RP #22, 29

References:
1) Fleet ALARA manual (NSD 507)

Student References Provided

GEN2.3 2.3.7 - GENERIC - Radiation Control
Radiation Control
Ability to comply with radiation work permit requirements during normal orabnormal conditions. (CFR: 41.12 / 45.10)

401-9 Comments:

Remarks/Status

401-9 Comments:

No comment.

Resolution / Comments:

N/A

Question 72 References:

From NSD-507:

to deactivate the ED after each exit but will deactivate ED at end of shift and return it to storage rack before leaving site.

- Complete and turn-in Dose Card even if no dose was received during the entry.
- Contact RP regarding problems.

507.7.3 EXPOSURE MONITORING WARNING FLAGS/ALARMS

A. Radiation Monitoring and Control System Flags

To ensure individuals do not exceed dose limits, the EDC computer program provides the following flags as individuals approach their established dose limit:

Alert Flag - Notification that individual reached 80% or greater, but less than 90%, of established administrative limit. Individual should notify his/her supervisor. Individual must receive RP supervision approval to enter a High Radiation Area or Locked High Radiation Area.

Exclude Flag - Notification that individual reached 90% or greater of established administrative limit. Individual may not enter the RCA/RCZ until he/she receives a dose extension approved by the Radiation Protection Manager (RPM).

B. Electronic Dosimeter (ED) Alarms

ED Dose and Dose Rate Alarms - EDs are programmed during log-on to alarm at a predetermined dose and dose rate. The alarm setpoints are specified by the RWP. The alarm setpoints can be viewed during EDC log-on and they are also located on the RWP. Set points can also be viewed any time after logging on to EDC by pressing and holding the Dose/Dose Rate toggle switch on the ED for 10 seconds. The alarm setpoints and stay time will be displayed and then will automatically return to dose monitoring mode. The dose alarm consists of an audible alarm and a visual alarm. If the dose setpoint is exceeded the dose alarm will sound and a red light will flash on the ED. The audible alarm and the flashing red light will not stop until the ED is reset. The dose rate alarm automatically resets when the dose rate drops below the alarm setpoint. The ED display will indicate the type of alarm. The ED is also programmed to alarm when it is activated for 16 hours or when RWP specific stay time is exceeded.

- If regular monitoring of the ED indicates that the dose alarm set-point will be exceeded prior to completing the job, leave the area and contact RP. Do not wait to receive an alarm before exiting the area.
- For some high dose-rate jobs, RP may ask you to exit the work area when the ED accumulates 60% of the dose alarm set-point.
- **If the ED dose alarm sounds, immediately inform co-workers, exit the RCA/RCZ and call RP.** Re-entry is not permitted until the alarm is cleared by RP.
- ED dose-rate alarms may be anticipated by RP due to higher dose rates in the travel path to the work location **OR** a worker being in close proximity to a radiation source. Anticipated dose rate alarms shall be discussed during RP brief prior to beginning work. Work can continue following a travel path dose rate alarm providing the alarm clears prior to arriving at the work location. For anticipated dose rate alarms due to proximity to a radiation source, work may continue for no more than two dose rate alarms. If a third anticipated dose rate alarm is received, stop work and notify RP immediately. For unanticipated dose rate alarms (any dose rate alarm that is **NOT** briefed by RP prior to beginning work) immediately stop work and contact RP.
- Notify RP prior to entering RCA or RCZ if you have trouble hearing audible ED alarms. Alternate alarm indicators will be provided.
- If the ED malfunctions, immediately exit the RCA/RCZ and call/report to RP with problem ED.

Question 72 Parent Question:

RADRPN03

1 Pt Units 1 and 2 are at 100% power. Given the following events and conditions:

- Unit 2 has experienced several fuel pin failures.
- The mechanical seal has failed on the 2B NI pump.
- The 2B NI pump room general area is 400 mrem/hr.
- In order to reach the 2B NI pump room the worker must transit through a 6 Rem/hr high radiation area for 2 minutes and return via the same path.
- The worker has an accumulated annual dose of 400 mrem.

What is the maximum allowable time that the worker can participate in the seal repair on the 2B NI pump and not exceed the EXCLUDE exposure limit for external exposure?

A. No longer than 2 hours

B. No longer than 2.5 hours

C. No longer than 3 hours

D. No longer than 3.5 hours

Answer 319

Answer: B

Distracter Analysis:

The candidate should determine that the exclusion flag exposure limit is 90% of 2000 mrem admin limit = 1800 mrem

Transient exposure is 400 mrem (6000mrem/hr x 4/60hr). (During transit to and from the job).

400 mrem + 400 mrem = 800 mrem

1800 mrem - 800 mrem = 1000 mrem allowable before reaching exclusion flag exposure admin limit

1000 mrem / 400 mrem/hr = 2.5 hours

A. Incorrect: The answer is 2.5 hours.
Plausible: based on using alert flag limit (1600) versus exclude flag.

B. Correct:

C. Incorrect: The answer is 2.5 hours.
Plausible: based on calculating a one-way transit dose.

D. Incorrect: The answer is 2.5 hours.
Plausible: based on using admin limit (2000) and a one-way transit dose.

D

2010 MNS SRO NRC Examination QUESTION 73

2573

GEN2.4 2.4.17 - GENERIC - Emergency Procedures / Plan
Emergency Procedures / Plan
Knowledge of EOP terms and definitions. (CFR: 41.10 / 45.13)

Given the following conditions on Unit 1:

- A Reactor Trip and Safety Injection have occurred
- Main Steam and ALL feedwater is isolated to all SGs
- TD CA pump is running.
- All SG level instruments agree and indicate as follows:

1A	1B	1C	1D
100%	0%	38% and lowering slowly	38% and stable

Which ONE (1) of the following describes the condition of the SGs?

A.

1A	1B	1C	1D
Faulted	Ruptured	Intact	Intact

B.

1A	1B	1C	1D
Faulted	Ruptured	Ruptured	Intact

C.

1A	1B	1C	1D
Ruptured	Faulted	Ruptured	Intact

D.

1A	1B	1C	1D
Ruptured	Faulted	Intact	Intact

General Discussion

After the reactor trip and safety injection main steam and all feedwater has been isolated. The fact that SG 1A is at 100% level indicates that a SGTL or SGTR has occurred in that SG causing level to increase to 100% (ruptured).

1B SG at 0% level indicates that the SG is faulted. The faulted SG would not allow level to increase in the SG even though it is being supplied Auxiliary Feedwater.

1C SG level decreasing slowly is due to it providing steam supply to the TD CA pump.

1D SG level should be stable since it is bottled up and there is no rupture and no fault.

Answer A Discussion

INCORRECT: See explanation above.

PLAUSIBLE: The 1A SG being faulted is plausible if the applicant confuses difference between a ruptured and faulted SG and how to diagnose each.

1B being ruptured is plausible if the applicant does not understand the difference between a ruptured and faulted SG and how to identify them.

The 1C SG being intact is correct.

The 1D SG being intact is correct.

Answer B Discussion

INCORRECT: See explanation above.

PLAUSIBLE: The 1A SG being faulted is plausible if the applicant confuses difference between a ruptured and faulted SG and how to diagnose each.

1B SG being ruptured is plausible if the applicant does not understand the difference between a ruptured and faulted SG and how to identify them.

1C SG being ruptured is plausible if the applicant does not understand the difference between a ruptured and faulted SG and how to identify them.

The 1D SG being intact is correct.

Answer C Discussion

INCORRECT: See explanation above.

PLAUSIBLE: The 1A SG being ruptured is correct.

1B SG being faulted is correct.

1C SG being ruptured is plausible if the applicant does not understand the difference between a ruptured and faulted SG and how to identify them.

The 1D SG being intact is correct.

Answer D Discussion

CORRECT: See explanation above.

Basis for meeting the KA

This K/A is met because the applicant is required to recall the definitions of terms associated with implementation of EOP's (ruptured, faulted, intact) and understand how to diagnose plant conditions relative to those terms.

Basis for Hi Cog

Basis for SRO only

2010 MNS SRO NRC Examination QUESTION 73

2573

D

Job Level	Cognitive Level	QuestionType	Question Source
RO	Memory	NEW	

Development References
OMP 4-3 Rev 31 Pg 2 of 35 OP-MC-ADM-OMP Obj: 7

Student References Provided

GEN2.4 2.4.17 - GENERIC - Emergency Procedures / Plan
Emergency Procedures / Plan
Knowledge of EOP terms and definitions. (CFR: 41.10 / 45.13)

401-9 Comments:

Remarks/Status
401-9 Comments: A is NP because 100% in 1A and 38% and stable in 1D in the stem are diametrically apposed because both indicate stable in distractor A. Replace A. ---------- Resolution / Comments: Replaced 1A distracter in answer A with Faulted instead of Intact. See attached file for revised question.

Question 73 References:

OBJECTIVE	NLO	NLOR	LPRO	LPSO	LOR
Concerning OMP 4-3, Use of Abnormal and Emergency Procedures:			X	X	X
• Describe the responsibility of licensed operators for maintaining knowledge of and implementation of immediate actions.					
• State management's expectations for manual initiation of Safequards Actions.					
• State the expected action RO's and SRO's are to take if an automatic action, which should have occurred, failed.					
• Describe the Operations policy on when Non-procedural blocking of Automatic Safety Actuations could be done.					
• Given a set of plant conditions, determine if an A.T.W.S. (Anticipated Transient Without Scram) which would require a manual Reactor Trip has occurred or if a failure of the reactor trip breakers or the automatic trip feature of the reactor protection system had occurred which would require a plant shutdown.					
• State three subsequent actions that can be taken prior to procedure direction (include conditions that allow these actions to be taken).					
• State when Adverse Containment Setpoints are used.					
• Describe the Control Room Team Responsibilities During the use of EP/APs.	X	X			
• Define the following items: Check, ensure, faulted, ruptured, implement, intact, go to, refer to, per, stable, evaluate.	X	X			
• Describe the "rules of use" of the Two Column Format Procedure. ADMOMP004					

7.16 Selected Definitions

Some words used in the emergency procedures have unique meanings. These unique meanings should be understood based upon training and experience or by the specific use of the word in the context of the step being performed. Some words with unique meanings are listed below:

Check	-	to determine present status. (no action)
Ensure	-	to take necessary actions to guarantee that the component or reading is as specified. (Local actions in EPs and APs are only required if step specifies to dispatch personnel though).
Faulted	-	refers to a steam generator that has a secondary break.
Ruptured	-	refers to a steam generator that has a primary to secondary leak (SGTR).
Implement	-	begin a required program or series of procedures.
Intact	-	refers to a steam generator that is **NOT** faulted or ruptured and is available as a heat sink.
GO TO	-	discontinue use of present procedure and stay in the referenced procedure. The referenced procedure is always entered at the first step unless otherwise specified.
REFER TO, PER		user is directed to a supplemental procedure/enclosure for actions but will remain in the controlling procedure.
Stable	-	Maintained steady. **IF** a parameter is being controlled within a desired range, or if a slight trend in either direction is occurring, operator judgment may be used to determine if parameter is considered stable.
Evaluate	-	Appraise the situation. Includes taking action based on evaluation.

GEN2.4 2.4.39 - GENERIC - Emergency Procedures / Plan
Emergency Procedures / Plan
Knowledge of RO responsibilities in emergency plan implementation. (CFR: 41.10 / 45.11)

Given the following conditions on Unit 1:

- A Site Area Emergency has been declared
- A Site Assembly is being conducted in accordance with RP/0/A/5700/011 (Conducting a Site Assembly, Site Evacuation, or Containment Evacuation)

In accordance with Enclosure 4.3 (OSM Actions for Site Assembly) the announcement for the Site Assembly shall be repeated __(1)__ until notification that the Site Assembly has been completed and the Site Assembly shall be completed within __(2)__.

Which ONE (1) of the following completes the statement above?

A. 1. every 20 minutes
   2. 30 minutes

B. 1. every 10 minutes
   2. 30 minutes

C. 1. every 20 minutes
   2. 75 minutes

D. 1. every 10 minutes
   2. 75 minutes

General Discussion

In accordance with RP/0/A/5700/011, the Site Assembly should be completed within 30 minutes of initiation and the announcement for Site Assembly is repeated every 10 minutes until notification is received that the Site Assembly has been completed.

Answer A Discussion

INCORRECT. See explanation above.

PLAUSIBLE: Part 1 is plausible since Enclosure 4.3 discusses supervisors calling Security with a report regarding the site assembly approximately 20 minutes after initiation of the Site Assembly.

Part 2 is correct.

Answer B Discussion

CORRECT. See explanationa above.

Answer C Discussion

INCORRECT. See explanation above.

PLAUSIBLE: Part 1 is plausible since Enclosure 4.3 discusses supervisors calling Security with a report regarding the site assembly approximately 20 minutes after initiation of the Site Assembly.

Part 2 is plausible as this is the time requirement for activating the TSC.

Answer D Discussion

INCORRECT. See explanation above.

PLAUSIBLE: Part 1 is correct.

Part 2 is plausible as this is the time requirement for activating the TSC.

Basis for meeting the KA

The KA is matched since ROs typically make the announcements for Site Assemblies from the Control Room and therefore need to know the requirements for Site Assemblies and for making announcements.

Basis for Hi Cog

Basis for SRO only

Job Level	Cognitive Level	QuestionType	Question Source
RO	Memory	NEW	

Development References

Learning Objective:
1) EP-EMP #9

References:
1) RP/0/A/5700/011 Enclosure 4.3
2) Lesson Plan OP-MC-EP-EMP Section 2.9

Student References Provided

GEN2.4 2.4.39 - GENERIC - Emergency Procedures / Plan
Emergency Procedures / Plan
Knowledge of RO responsibilities in emergency plan implementation. (CFR: 41.10 / 45.11)

401-9 Comments:

Remarks/Status

401-9 Comments:

No comment.

Resolution / Comments:

QUESTION 74 2574 B

N/A

Question 74 References:

From Lesson Plan OP-MC-EP-EMP Section 2.9:

2.9 Site Assembly

A Site assembly is an occurrence that warrants the accountability of all personnel on site for reasons of personnel safety or for dissemination of information.

- Alert, Site Area Emergency or General Emergency has been declared.
- Other plant conditions that, in the opinion of the Operations Shift Manager or Emergency Coordinator, warrant an assembly.

Objective # 9

NOTE: All personnel inside the protected area are to be accounted for within thirty (30) minutes of the initiation of a Site assembly and continuously thereafter.

1. Contact security to inform them a site assembly is being initiated.
2. Turn on outside page speakers.
3. The Operations Shift Manager or designee shall:
   a. Sound a 10 second blast of the Site Assembly Alarm.

NOTE: For drill purposes, state "This is a Drill, This is a Drill".

   b. Using Control Room extension 4262 or 4263, dial 710, pause, dial 80. Following the beep announce over the Site PA System: This is a Site Assembly, This is a Site Assembly. (Give a brief description/reason for the assembly).
4. Repeat step 3.
5. Continue to repeat step 3, at 10 minute intervals until notification that a site assembly has been completed.
6. Turn off outside page speakers following completion of site assembly.

3.0 SUMMARY

3.1 Review Major Topics

Emergency Classification
Emergency Response Organization/Facilities
Emergency Operations Facility
Offsite Agencies
Public Alerting/Notification System
Access During Emergencies
Drill/Exercise Roles
Emergency Radiation Exposure

From RP/0/A/5700/011 Enclosure 4.3:

Enclosure 4.3

OSM Actions For Site Assembly

NOTE:
1. All personnel inside the protected area are to be accounted for within thirty (30) minutes of the initiation of Site Assembly and continuously thereafter until released or until instructed to relocate or evacuate.
2. All personnel outside the protected area and within the owner controlled area should report to their site assembly point and their supervision/designee within thirty (30) minutes of the initiation of Site Assembly and continuously thereafter until released or until instructed to relocate or evacuate. {PIP-M-02-01347}

1. IF a Site Assembly is required and the TSC is not activated, the Operations Shift Manager or designee shall perform the following:

_____ 1.1 Contact Security at extension 2688 or 4900 to inform them that a Site Assembly is being initiated.

NOTE: In the event of a card reader failure, Division/Group Managers are responsible for accounting for all personnel under their supervision and calling in a report to Security approximately 20 minutes after initiation of a site assembly. Actions to be taken in this case are specified in steps 1.7 and 1.8.

_____ 1.2 Confirm that Security has activated the plant-wide emergency accountability system (card reader system) and that the system is functioning.

_____ 1.3 Turn on outside page speakers.

_____ 1.4 Sound a 10-second blast of the Site Assembly alarm.

_____ 1.5 Record the site assembly alarm time. Time _____

1.6 Record the time of the Site Assembly alarm from the previous step at the appropriate space in step 1.7 or step 1.8, to be announced to the site.

INITIALS _____ PRINTED NAME _____

_____ 1.8 **For a Drill:** dial 710, pause, dial 80, and following the beep, announce:

"This is a drill. This is a drill. This is a Site Assembly. This is a Site Assembly.

(Give a brief description/reason for assembly/special instructions)

_____
_____
_____
_____
_____
_____

All personnel are to report immediately to their assembly points. For persons inside the protected area, if you do not know the location of your assembly point, either report to the Canteen Office Warehouse, or report to the site assembly point in the Admin Building. For persons outside the protected area and in the owner controlled area, if you do not know the location of your assembly point, report to the auditorium in building 7422, McGuire Office Complex (MOC), or to the lobby of building 7403, Technical Training Center (TTC). All personnel are to remain at their site assembly point until further instructions are given. Assembly start time is :_____." [PIP M-07-2732, C.A. 54}

In the event of a card reader failure, announce: "The card reader system is not functioning. Division/Group Managers are responsible for accounting for all personnel under their supervision and calling in a report to Security at extension 2688 or 4900 at approximately 20 minutes after assembly start time."

_____ 1.9 **For an Actual Emergency:** repeat steps 1.4 and 1.7 in full, one time.

_____ 1.10 **For a Drill:** repeat steps 1.4 and 1.8 in full, one time.

_____ 1.11 Contact Security and request that security perform a sweep of the discharge canal, the nature trail, and the beach to evacuate visitors from the owner controlled area.

_____ 1.12 **For an Actual Emergency:** continue to repeat steps 1.4 and 1.7 at 10-minute intervals until notification that the Site Assembly has been completed.

_____ 1.13 **For a Drill:** continue to repeat steps 1.4 and 1.8 at 10-minute intervals until notification that the site assembly has been completed.

_____ 1.14 Turn off outside page speakers following completion of site assembly.

GEN2.4 2.4.50 - GENERIC - Emergency Procedures / Plan
Emergency Procedures / Plan
Ability to verify system alarm setpoints and operate controls identified in the alarm response manual. (CFR: 41.10 / 43.5 / 45.3)

Given the following indications on Unit 1:

- 1AD-2 / C8 (P/R OVER POWER STOP ALERT) is in LIT
- Tavg is 578°F and stable

1. Which ONE (1) of the following lists the MINIMUM conditions that will cause the alarm above?

2. Which ONE (1) of the following is the required action for the above condition per OP/1/A/6100/010 C, Annunciator Response for Panel 1AD-2?

A. 1. One PR channel greater than 109%
   2. Initiate RCS boration to reduce power

B. 1. One PR channel greater than 103%
   2. Reduce turbine load to reduce power

C. 1. One PR channel greater than 103%
   2. Initiate RCS boration to reduce power

D. 1. One PR channel greater than 109%
   2. Reduce turbine load to reduce power

General Discussion

With the indications given, the applicant is presented with a P/R over power rod stop. (C2) The logic and setpoint for this stop is 1/4 P/R > 103%. With the indication given N44 is the only power range > 103%. The correct action per the ARP for 1AD2 C8 is to reduce turbine load to reduce reactor power.

Answer A Discussion

INCORRECT: See explanation above.

PLAUSIBLE: Part 1 is plausible because there is a PR Hi Flux Hi Setpoint Alert annunciator that will alarm if 1/4 PR instruments is greater than 109% power.

Part 2 is plausible because the addition of boric acid to the RCS will add negative reactivity and initially lower reactor power.

Answer B Discussion

CORRECT: See explanation above.

Answer C Discussion

INCORRECT: See explanation above.

PLAUSIBLE: Part 1 is correct.

Part 2 is plausible because the addition or boric acid to the RCS will add negative reactivity and initially lower reactor power.

Answer D Discussion

INCORRECT: See explanation above.

PLAUSIBLE: Part 1 is plausible because there is a PR Hi Flux Hi Setpoint Alert annunciator that will alarm if 1/4 PR instruments is greater than 109% power.

Part 2 is correct.

Basis for meeting the KA

KA is matched because the question tests the applicant's ability verify the validity of a given annunciator and identify the correct controls to operate in accordance with the associated ARP.

Basis for Hi Cog

This is a higher cognitive level question because the applicant must perform a level of analysis concerning the given indications and determine the cause and select a course of action.

Basis for SRO only

Job Level	Cognitive Level	QuestionType	Question Source
RO	Comprehension	BANK	2009 MNS RO Exam Quesiton #38

Development References

Lesson Plan OP-MC-IC-ENB page 51 (Rev 27)
ARP for 1AD-2 C8

OP-MC-IC-ENB Obj: 12

Student References Provided

GEN2.4 2.4.50 - GENERIC - Emergency Procedures / Plan
Emergency Procedures / Plan
Ability to verify system alarm setpoints and operate controls identified in the alarm response manual. (CFR: 41.10 / 43.5 / 45.3)

401-9 Comments:

Remarks/Status

401-9 Comments:

No comment.

Resolution / Comments:

QUESTION 75 2575 B

N/A

Question 75 References:

OP-MC-IC-ENB Obj: 12

12	List the Protection and Control Interlocks (Ps and Cs) associated with the Nuclear Instrumentation System. (Include setpoints and logic)		X	X	X	X
13	State the purpose of the Wide Range Neutron Detection System.		X	X	X	
14	Concerning the Wide Range Neutron Detection System: • Describe the operation. • Describe the indications and controls.		 X X	 X X	 X X	 X
15	State the purpose of the Gamma-Metrics Shutdown Monitor System.		X	X	X	
16	Concerning the Gamma-Metrics Shutdown Monitor System: • Describe the operation. • Describe the alarms, indications and controls.		 X X	 X X	 X X	 X
17	Determine the validity of indicated reactor power using alternate indications of power level.		X	X	X	X
18	Describe the Source Range instrumentation response for voiding in the core and downcomer region.		X	X	X	X
19	Concerning the Technical Specifications related to the Nuclear Instrumentation System; • Given the LCO title, state the LCO (including any COLR values) and applicability. • For any LCO's that have action required within one hour, state the action. • Given a set of parameter values or system conditions, determine if any Tech Spec LCO's is(are) not met and any action(s) required within one hour. • Given a set of plant parameters or system conditions and the appropriate Tech Specs, determine required action(s). • Discuss the basis for a given Tech Spec LCO or Safety Limit. * SRO Only			 X X X X	 X X X X	 X X X X *

From Lesson Plan OP-MC-IC-ENB page 51 (Rev 27)

3.1.4 Setpoints

Objective # 11, 12

- SR High Flux at Shutdown - 1/2 channels 0.5 decade above shutdown counts in Mode 6 and $\leq$ 5 times shutdown background counts in Modes 3,4&5 (TS Basis 3.3.1).
- SR High Flux Level Rx Trip - 1/2 channels greater than 10^5 cps.
- IR **P-6** - 1/2 channels greater than 10^{-10} Amps, resets at $7X10^{-11}$ amps decreasing. Requires 2/2 channels < setpoint to reset.
- IR High Flux Rod Stop **C-1** - 1/2 channels current equivalent to greater than 20% power.
- IR High Flux Level Rx Trip - 1/2 channels current equivalent to 25% power.
- Power Range Permissive **P-10** - 2/4 channels $\geq$ 10% power, resets when 3/4 channels < 10% power (Actual values are 10.5% increasing and 9.5% decreasing power).
- PR Rx Trip Low Range - 2/4 channels $\geq$ 25% power.
- PR Permissive **P-8** - 2/4 channels $\geq$ 48% power, resets when 3/4 channels < 48% power.
- PR Permissive **C-2** - 1/4 channels $\geq$ 103% power.
- PR Overpower Trip High Range - 2/4 channels $\geq$ 109% power.
- PR Positive Rate Trip - 2/4 channels $\geq$ +5% power in 2 seconds.
- PR Channel Deviation - Deviation between Channels.
- PR Upper Section Deviation - Deviation between Upper Detectors and the average of all the Upper Detectors.
- PR Lower Section Deviation - Deviation between Lower Detectors and the average of all the Lower Detectors.

NOTE: For a complete listing of the Protection Permissive Interlocks and Control Permissive Interlocks ("Ps" and "Cs") see the Reactor Protection Lesson Plan (IC-IPE).

From the ARP for 1AD-2 C8 (OP/1/A/6100/010 C)

Annunciator Response For Panel 1AD-2

Nomenclature:	**P/R OVER POWER ROD STOP**	Window:	**C8**

Setpoint: 1/4 Power Range nuclear instruments at 103% Reactor Power

Origin: Bistable in 1/4 P/R drawers, Protection Sets I, II III, and IV

Probable Cause:
- Power Range channel in test
- Overpower condition
- Instrument malfunction

Automatic Action: Control rods will **NOT** withdraw in automatic or manual.

Immediate Action:
1. **IF** alarm is due to test, reduce output of channel below Setpoint and place "Rod Stop Bypass" switch to the channel in test.
2. **IF** overpower condition exists, reduce power below 100% Reactor Power.
3. **IF** due to instrument malfunction, go to AP/1/A/5500/016 (Malfunction of Nuclear Instrumentation).

Supplementary Action: **IF** desired to have Engineering evaluation as to cause for alarm, freeze the Transient Monitor.

References:
- UFSAR, Figure 7-1 (3 of 16)
- Drawing MCM-1399-04.27
- NSM MG-12126

End of Response

Copy of parent question 2009 MNS RO Exam Q 38:

1Pt Given the following sequence of events:

- A Large Break LOCA occurs on Unit 1
- All ECCS systems are injecting from the FWST
- Safety Injection is reset
- FWST level is currently 200 inches

An Operator depresses the 'SS-RESET' pushbuttons on the 'CNTRL PERMISSIVE FOR RECIRC MODE 1NI-185A / 184B' switches.

Concerning the following valves:

- 1NI-185A (RB Sump to Train A ND & NS)
- 1NI-184B (RB Sump to Train B ND & NS)
- 1ND-19A (A ND Pump Suction from FWST or NC)
- 1ND-4B (B ND Pump Suction from FWST or NC)

Which ONE (1) of the following describes what the Operator observes with regards to the automatic operation of the ECCS valves listed above after the SS-RESET pushbuttons are depressed?

A. Immediately after depressing the SS-RESET pushbuttons, 1NI-185A/184B, OPEN <u>AND</u> 1ND-19A/4B CLOSE.

B. Immediately after depressing the SS-RESET pushbuttons, 1NI-185A/184B OPEN <u>AND</u> 1ND-19A/4B REMAIN OPEN.

C. When 2/3 FWST Lo Level Bistables are received, 1NI-185A/184B OPEN <u>AND</u> 1ND-19A/4B CLOSE.

D. When 2/3 FWST Lo Level Bistables are received, 1NI-185A/184B REMAIN CLOSED <u>AND</u> 1ND-19A/4B REMAIN OPEN.

2010 MNS SRO Question Worksheets

SYS003 2.1.20 - Reactor Coolant Pump System (RCPS)
YS003 GENERIC
bility to interpret and execute procedure steps. (CFR: 41.10 / 43.5 / 45.12)

Given the following conditions on Unit 1:

- The unit was initially at 100% RTP
- #1 Seal Leakoff on 1A NC pump indicates 6.5 GPM
- AP-08 (Malfunction of NC Pump) Case I (NC Pump Seal or Pump Lower Bearing Malfunction has been implemented
- The crew has reached the steps in AP-08 to trip the Reactor and stop the 1A NC pump

In accordance with AP-08, Enclosure 2 (NC Pump Post Trip Actions For #1 Seal Failure) must be performed within 3-5 minutes after stopping the 1A NC pump to prevent __(1)__. The requirement to perform these actions is applicable __(2)__.

Which ONE (1) of the following completes the statement above?

A. 1. damage to the 1A NC pump #2 & #3 seals
   2. only while AP-08 is in effect

B. 1. damage to the 1A NC pump #2 & #3 seals
   2. even after transition from AP-08 to E-0

C. 1. the VCT from exceeding design temperature limits
   2. only while AP-08 is in effect

D. 1. the VCT from exceeding design temperature limits
   2. even after transition from AP-08 to E-0

General Discussion

In accordance with AP-08, after the Reactor is tripped and the NC pump is stopped the seal return valve for the AFFECTED NC pump (1NV-34A) must be closed within 3-5 minutes. This action is contained in Enclosure 2 (NC Pump Post Trip Actions For #1 Seal Failure). In accordance with the AP-08 Background Document, the seal return line must be isolated to prevent damage to the #2 and #3 seals due to high temperature water flowing past the seals.

Per AP-08, the requirement to close 1NV-34A within 3-5 minutes after stopping the pump is applicable even after transition to the EPs.

Answer A Discussion

INCORRECT: See explanation above.

PLAUSIBLE: Part 1 is correct.

Part 2 is plausible because conditional steps in APs are typically no longer applicable when transition is made to the EPs. In this particular case the applicant must recall the caution from AP-08 that states the post pump trip actions in the AP-08 enclosure are applicable even after transition to the EPs to arrive at the correct answer.

Answer B Discussion

CORRECT: See explanation above.

Answer C Discussion

INCORRECT: See explanation above.

PLAUSIBLE: Part 1 is plausible because this is the basis for closing 1NV-94AC and 95B (NC Pumps Seal Return Cont Isolations) in AP-08 when both seal injection and thermal barrier cooling are lost.

Part 2 is plausible because conditional steps in APs are typically no longer applicable when transition is made to the EPs. In this particular case the applicant must recall the caution from AP-08 that states the post pump trip actions in the AP-08 enclosure are applicable even after transition to the EPs to arrive at the correct answer.

Answer D Discussion

CORRECT: See explanation above.

PLAUSIBLE: Part 1 is plausible because this is the basis for closing 1NV-94AC and 95B (NC Pumps Seal Return Cont Isolations) in AP-08 when both seal injection and thermal barrier cooling are lost.

Part 2 is correct.

Basis for meeting the KA

The applicant demonstrates the ability to interpret procedure steps by demonstrating a knowledge of basis for performing the Post Pump Trip Actions of Enclosure 2 (specifically closing the NC pump seal return valves within 3-5 minutes). The applicant demonstrates the ability to execute procedure steps by demonstrating the knowledge that the AP procedure steps must be performed even after transition to the EPs.

Basis for Hi Cog

Basis for SRO only

This question meets the following criteria for an SRO only question as described in the "Clarification Guidance for SRO-only Questions (Rev 1 dated 03/11/2010)" under the Screening Criteria for question linked to 10CFR55.43(b)(5) (Assessment and Selection of Procedures):

1) The question can NOT be answered by knowing systems knowledge alone. The basis for closing the seal return isolation valve for the affected pump within 3-5 minutes is not covered by the NCP system lesson plan. Therefore, this is not systems level knowledge.
2) The question can NOT be answered by knowing immediate Operator actions.
3) The question can NOT be answered by knowing AOP or EOP entry conditions.
4) The question can NOT be answered by knowing the purpose, overall sequence of events, or overall mitigative strategy of the procedure.
5) The question requires the applicant to recall procedure content from AP-08 (i.e. that the Post Pump Trip Actions must still be performed even after transition to the EPs). Additionally, the applicant must recall why the procedure steps must be performed from the AP-08 Background Document.

Job Level	Cognitive Level	QuestionType	Question Source
SRO	Memory	NEW	

Development References

sson Objective:
.) N/A

References:
1) AP-08, Malfunction of NC Pump
2) AP-08 Background Document

Student References Provided

SYS003 2.1.20 - Reactor Coolant Pump System (RCPS)
SYS003 GENERIC
Ability to interpret and execute procedure steps. (CFR: 41.10 / 43.5 / 45.12)

401-9 Comments:

Remarks/Status

401-9 Comments:

No comment.

Resolution / Comments:

N/A

Question 76 References:

From AP-08:

MNS AP/1/A/5500/08 UNIT 1	MALFUNCTION OF NC PUMP Case I NC Pump Seal or Pump Lower Bearing Malfunction	PAGE NO. 5 of 24 Rev. 12

ACTION/EXPECTED RESPONSE	RESPONSE NOT OBTAINED
6. **Check if seal cooling available to affected pump:** __ • Seal injection established (Normal or SSF supply) OR __ • KC to thermal barrier established.	**Perform the following:** a. CLOSE one of the following: • 1NV-94AC (NC Pumps Seal Ret Cont Inside Isol) OR __ • 1NV-95B (NC Pumps Seal Ret Cont Outside Isol). __ b. **IF AT ANY TIME** seal cooling is restored, **THEN** observe Note prior to Step 7 and **GO TO** Step 7. __ c. **RETURN TO** Step 2.

NOTE Up to 24 hours of NC pump operation may be required before seals seat and operate normally after seal maintenance or startup.

__ 7. **Check any NC pump number 1 seal leakoff - GREATER THAN OR EQUAL TO 6 GPM.**	**Perform the following:** **NOTE** CP/1/A/6200/001B (Chemical and Volume Control System Charging), Enclosure 4.10 (Maintaining NC Pump Seal Leakoff) gives guidance on actions used to change seal leakoff flow. __ a. **IF** seal leakoff slowly going up, **THEN** contact station management for further guidance. __ b. Continue to monitor NC pump seal leakoff flow. __ c. **IF AT ANY TIME** seal leakoff flow goes up to 6 GPM, **THEN GO TO** Step 8. __ d. **GO TO** Step 9

ACTION/EXPECTED RESPONSE	RESPONSE NOT OBTAINED

8. **Stop affected NC pump as follows:**

   a. **IF** A or B NC pump is the affected pump, **THEN** CLOSE associated spray valve:

   __ • 1NC-27C (A NC Loop PZR Spray Control)

   __ • 1NC-29C (B NC Loop PZR Spray Control).

CAUTION **Enclosure 2 (NC Pump Post Trip Actions For #1 Seal Failure) contains actions that must be performed between 3 and 5 minutes after stopping NC pump. This enclosure must be performed even after transition to EPs.**

__ b. Have any available RO perform Enclosure 2 (NC Pump Post Trip Actions For #1 Seal Failure) as crew performs the following steps.

ACTION/EXPECTED RESPONSE	RESPONSE NOT OBTAINED

CAUTION **Failure of Number 2 and 3 seals may occur unless the affected NC pump seal return valve is closed between 3 minutes and 5 minutes after stopping pump. This enclosure must be completed even after transition to EPs.**

__ 1. **Record time of NC pump shutdown:**

_____

2. **Check if seal cooling available to affected pump:**

__ • Seal injection established (Normal or SSF Supply)

CR

__ • KC to thermal barrier established.

Perform the following:

a. CLOSE the following:

__ • 1NV-94AC (NC Pumps Seal Ret Cont Inside Isol)

__ • 1NV-95B (NC Pumps Seal Ret Cont Outside Isol).

__ b. Exit this enclosure.

__ 3. **Check any NC pump number 1 seal leakoff flow - GREATER THAN OR EQUAL TO 6 GPM.**

__ **GO TO Step 5.**

__ 4. **Maintain seal injection flow greater than 9 GPM to affected pump(s).**

ACTION/EXPECTED RESPONSE	RESPONSE NOT OBTAINED
5. **WHEN affected NC pump has been off 3 minutes, THEN immediately perform the following:**	
a. CLOSE affected NC pump seal return valve:	
__ • 1NV-34A (A NC Pump Seal Return Isol)	
__ • 1NV-50B (B NC Pump Seal Return Isol)	
__ • 1NV-66A (C NC Pump Seal Return Isol)	
__ • 1NV-82B (D NC Pump Seal Return Isol).	
b. OPEN all of the following valves:	
__ • OPEN 1KC-394A (A NC Pump Therm Bar Otlt).	
__ • OPEN 1KC-345A (C NC Pump Therm Bar Otlt).	
__ • OPEN 1KC-364B (B NC Pump Therm Bar Otlt).	
__ • OPEN 1KC-413B (D NC Pump Therm Bar Otlt).	

From AP-08 Background Document:

CASE I STEP 6:

PURPOSE:

Prevent hot NC Pump seal return flow from going to the VCT and prevent transition to the steps that may close individual pump seal return valves if no seal cooling exists.

DISCUSSION:

With no seal injection coincident with no thermal barrier cooling, this step closes NV-94 and 95 (NC Pump seal return containment isolations). This will force the hot #1 seal leak-off flow to the PRT and prevent the VCT from exceeding design temperature limits (150 F). The RNO of this step will also prevent transition to the next several steps dealing with specific seal failures, and back to monitoring for NCP trip criteria. This has the benefit of skipping the steps that would close the individual seal return isolation valves. The individual seal return isolation valves need to remain open for loss of all seal cooling events. The following is an excerpt from DW-94-011:

Isolation of the #1 seal leakoff line during a loss of all seal cooling event would force the #2 NCP seal into the high pressure mode of operation at high temperature. This is beyond the design basis of the #2 seal, and the response of the #2 seal to high pressure operation without cooling is unknown. The analysis performed for the extended loss of ac power in WCAP-10541, Rev. 2, identifies that "the high temperature two-phase flow through the seal system and #1 seal leakoff line increases the pressure in the #1 leakoff cavity. The increased leakoff cavity pressure tends to decrease the separation of the #1 seal faces which tend to reduce the leakage. The combination of competing effects results in higher leakage rates, but leakage rates that are self-limiting. Higher flow increases the system back pressure which reduces the separation of the faces, reducing the flow." Therefore, keeping the #1 seal leakoff line open will provide the benefit of minimizing the leakage, while closing the leakoff line could result in catastrophic failure of the #2 seal and actually increase leakage.

In summary, closing NV-94 & 95 keeps individual flowpath open for #1 seal leakoff (through relief to PRT), but isolates it from the VCT.

Note: this AP does not address restoring a loss of seal injection or thermal barrier cooling. Other APs address those problems.

REFERENCES:
DW-94-011 page 6 of 7
WCAP-10541, Rev. 2

CASE I STEP 8:

PURPOSE:

Provide the direction for stopping the affected NC Pump.

DISCUSSION:

Closing a spray valve for "A" or "B" pump ensures Pzr pressure control is maintained. The operator is cued to close the spray valve in anticipation of losing the motive force for flow through the valve. The operator is expected to take whatever other compensatory action is required to stabilize Pressurizer pressure (operating heaters or other spray flow).

Between three and five minutes after the pump has been tripped, the affected pumps seal return isolation is closed. Waiting three minutes ensures the pump has stopped rotating. The #2 seal has a softer seat than the #1 seal, and if rotating while exposed to the potential debris from the failed #1 seal, it could experience premature failure. Closing it in less than 5 minutes minimizes the time the #2 seal is exposed to high temperature fluid conditions.

Closing the seal return valve within 3 to 5 minutes during a #1 seal failure event does not meet the criteria of "high PRA values" as determined by the Severe Accident Analysis Group. For McGuire, this corresponds to a Risk Achievement Worth (RAW) greater than or equal to 1.04. PIP M-03-1992 documents the events that meet these criteria. As such this action is not a McGuire 'time critical action', but is a management expectation and prudent action to prevent damage to the #2 and #3 seals. PIP M-07-0310 ACA#4 documents the removal of this action from McGuire's 'time critical action' list.

After the affected seal return is closed, the thermal barrier outlet valve is opened, if necessary. This is after the previous step to ensure it's after any perturbations that would close the valve.

An available RO is designated to perform Enclosure 2 (NC Pump Post Trip Actions for #1 Seal Failure). This could be an extra RO if available. If one is not available, this could be the BOP. It has to be someone. The use of an enclosure facilitates the designated person completing the enclosure actions while minimizing the interaction with the crew. The enclosure can be handed off to the designated person while the crew can focus on just E-0. With an enclosure, additional communications between the RO and the SRO aren't required to complete these actions.

If in Mode 1 or 2, the guidance for stopping a NC Pump includes: tripping the reactor, waiting for reactor power to decay below 5%, tripping the affected NC pump, and transition to E-0. In Mode 3, 4, or 5, this is not necessary. This is why the two steps for stopping an NCP are written differently.

Guidance is given to wait until reactor power is less than 5% before stopping the NC pump. This will ensure the NC pump will provide adequate flow/core cooling until reactor power is sufficiently low enough to preclude a challenge to fuel integrity.

SYS005 A2.02 - Residual Heat Removal System (RHRS)
Ability to (a) predict the impacts of the following malfunctions or operations on the RHRS, and (b) based on those predictions, use procedures to correct, control, or mitigate the consequences of those malfunctions or operations: (CFR: 41.5 / 43.5 / 45.3 / 45.13)
Pressure transient protection during cold shutdown .....

Given the following conditions on Unit 1:

- The unit is in Mode 5
- NC system temperature is currently 112°F
- 1A ND Train is in service
- A special test procedure is to be run which requires BOTH NI pumps to be run in parallel and aligned to inject into the NC system.

Which ONE (1) of the following describes the requirements per Tech Spec 3.4.12 (LTOP) Bases?

A. Secure two PORVs open with associated block valves open and power removed.
This action protects against brittle fracture due to pressurized thermal shock of the reactor vessel.

B. Secure two PORVs open with associated block valves open and power removed.
This action protects against brittle fracture due to cold overpressure of the reactor vessel.

C. Establish an RCS vent of ≥ 2.75 square inches and verify at least ONE Operable PZR PORV.
This action protects against brittle fracture due to pressurized thermal shock of the reactor vessel.

D. Establish an RCS vent of ≥ 2.75 square inches and verify at least ONE Operable PZR PORV.
This action protects against brittle fracture due to cold overpressure of the reactor vessel.

General Discussion

Based on the conditions given, the applicant is placed in a condition that if the test is to be run, certain conditions must be met to satisfy the LTOP vent path requirements.

One method of meeting the vent path requirements is to establish an adequate vent path prior to starting the test. For this case, securing open two Pressurizer PORVs or establishing a vent path of greater than or equal to 4.5" will meet those requirements.

Another method of meeting the vent path requirements is establish a RCS vent path of > 2.75 " AND two Operable PORV's.

The second part of the question deals with the basis of LTOP which is the protection of the reactor vessel from brittle fracture at lower temperatures.

Answer A Discussion

INCORRECT: See explanation above.

PLAUSIBLE: Part 1 is correct and therefore plausible.

Part 2 is plausible because pressurized thermal shock is a low temperature brittle fracture event but is predicated by a rapid overcooling event which sets up a temperature gradient across the reactor vessel. One of the actions which would allow for this test is the verification of an operable RHR suction relief and that NCS temperature is greater than 74° and Cool Down rate <20 Deg/hr. The applicant could misinterpret this as preventing a PTS type event.

Answer B Discussion

CORRECT: See explanation above

Answer C Discussion

INCORRECT: See explanation above.

PLAUSIBLE: Part 1 is plausible because it is partially correct in that the actions stated would meet LTOP requirements but an additional operable PZR PORV would required.

Part 2 is plausible because pressurized thermal shock is a low temperature brittle fracture event but is predicated by a rapid overcooling event which sets up a temperature gradient across the reactor vessel. One of the actions which would allow for this test is the verification of an operable RHR suction relief and that NCS temperature is greater than 74° and Cool Down rate <20 Deg/hr. The applicant could misinterpret this as preventing a PTS type event.

Answer D Discussion

INCORRECT: See explanation above.

PLAUSIBLE: Part 1 is plausible because it is partially correct in that the actions stated would meet LTOP requirements but an additional operable PZR PORV would required.

Part 2 is correct and therefore plausible.

Basis for meeting the KA

The KA is matched because an operation is about to occur (operation of two NI pumps at the same time) that would result in a pressure transient in the RCS during cold shutdown. The applicant is asked to predict the possible impacts (Brittle fracture) and determine the requirements to mitigate the possible consequences of the proposed test. How this test will impact the LTOP system vent path requirements (Pressure transient protection during cold shutdown). The applicant must determine the actions required by Tech Specs (use procedures to control) that will allow both NI pumps to be run simultaneously.

Basis for Hi Cog

This is a higher cognitive level question because it requires multiple mental steps. The applicant must first analyze the given information to determine that the vent path requirements have changed from 2.75" to 4.5". The applicant must then recall from memory all combinations of equiment that would meet the 4.5" vent path requirement.

Basis for SRO only

This question meets the following criteria for an SRO only question as described in the "Clarification Guidance for SRO-only Questions (Rev 1 dated 03/11/2010)" under the Screening Criteria for question linked to 10CFR55.43(b)(2) (Tech Specs):

1) It can NOT be answered solely by knowing < 1 hour Tech Specs.
2) It can NOT be answered solely by knowing the LCO/TRM information listed "above-the-line".
3) It can NOT be answered by knowing the Tech Spec Safety Limits or their bases
4) It requires the applicant to have detailed knowledge of Tech Spec 3.4.12 vent path requirements and information from the TS 3.4.12 Basis Document to determine the correct answer.

Job Level	Cognitive Level	QuestionType	Question Source
SRO	Comprehension	NEW	

Development References

Learning Objectives:
1) PS-NC #24

References:
Tech Sped 3.4.12 Basis

Student References Provided

SYS005 A2.02 - Residual Heat Removal System (RHRS)
Ability to (a) predict the impacts of the following malfunctions or operations on the RHRS, and (b) based on those predictions, use procedures to correct, control, or mitigate the consequences of those malfunctions or operations: (CFR: 41.5 / 43.5 / 45.3 / 45.13)
Pressure transient protection during cold shutdown .....

401-9 Comments:

Remarks/Status

401-9 Comments:

No comment.

Note: The justification on page B3.4. 12-8 of the reference should be before distractors C and D NOT A and B.

Resolution / Comments:

Revised the justification on reference page B 3,4.12-8 to say "This provides plausibility for distracters C and D".

Question 77 References:

From OP-MC-PS-NC Objectives

OBJECTIVES

	OBJECTIVE	NLO	NLOR	LPRO	LPSO	LOR
20	Describe how NCS temperature, pressure, flow and Pzr level are measured and indicated.		X	X	X	
21	Describe the operation and indication readout of the following NCS level instrumentation: • Ultrasonic level detection • WR level • NR level • Sightglass		X	X	X	X
22	State the nominal values for NC System pressure, Th, Tc, Tave, Pzr temperature for Hot Zero Power and Hot Full Power.	X	X	X	X	
23	Given a Limit and/or Precaution associated with the NC System, discuss its basis and when it applies.		X	X	X	X
24	Concerning the Technical Specifications related to the NC System: • Given the LCO title, state the LCO (including any COLR values) and applicability. • For any LCO's that have action required within one hour, state the action. • Given a set of parameter values or system conditions, determine if any Tech Spec LCO's is(are) not met and any actions(s) required within one hour. • Given a set of parameter values or system conditions and the appropriate Tech Spec, determine required action(s). • Discuss the bases for a given Tech. Spec. LCO or Safety Limit. * SRO ONLY			X X X X	X X X X X	X X X X *

From TS 3.4.12 Basis:

BASES

APPLICABILITY (continued)

the pressurizer safety valves that provide overpressure protection during MODES 1, 2, and 3, and MODE 4 above 300°F.

Low temperature overpressure prevention is most critical during shutdown when the RCS is water solid, and a mass or heat input transient can cause a very rapid increase in RCS pressure when little or no time allows operator action to mitigate the event.

The Applicability is modified by a Note stating that accumulator isolation is only required when the accumulator pressure is more than or at the maximum RCS pressure for the existing temperature, as allowed by the P/T limit curves. This Note permits the accumulator discharge isolation valve Surveillance to be performed only under these pressure and temperature conditions.

ACTIONS

A Note prohibits the application of LCO 3.0.4.b to an inoperable LTOP system. There is an increased risk associated with entering MODE 4 from MODE 5 with LTOP inoperable and the provisions of LCO 3.0.4.b, which allow entry into a MODE or other specified condition in the Applicability with the LCO not met after performance of a risk assessment addressing inoperable systems and components, should not be applied in this circumstance.

A.1, A.2.1, A.2.2.1, A.2.2.2, A.3, A.4, A.5.1, and A.5.2

With two centrifugal charging pumps, safety injection pumps, or a combination of each, capable of injecting into the RCS, RCS overpressurization is possible.

To immediately initiate action to restore restricted coolant input capability to the RCS reflects the urgency of removing the RCS from this condition. Two pumps may be capable of injecting into the RCS provided the RHR suction relief valve is OPERABLE with:

Correct answer, one option to allow the test would be to secure open 2 PORV's

1. RCS cold leg temperature > 174°F (Unit 1), or
2. RCS cold leg temperature > 89°F (Unit 2), or
3. RCS cold leg temperature > 74°F and cooldown rate < 20°F/hr (Unit 1), or
4. RCS cold leg temperature > 74°F and cooldown rate < 60°F/hr (Unit 2), or
5. two PORVs secured open with associated block valves open and power removed, or
6. a RCS vent of ≥ 4.5 square inches, or

BASES

ACTIONS (continued)

7. a RCS vent of ≥ 2.75 square inches and two OPERABLE PORVs (the RCS vent shall not be one of the two OPERABLE PORVs).

This provides the plausibility for distracters C and D.

For cases where no reactor coolant pumps are in operation, RCS cold leg temperature limits are to be met by monitoring of BOTH the WR Cold Leg temperatures and Residual Heat Removal Heat Exchanger discharge temperature. With both PORVS and block valves secured open, or with an RCS vent of 4.5 square inches, there are no credible single failures to limit the flow relief capacity. For the RHR relief valve to be OPERABLE, the RHR suction isolation valves must be open and the relief valve setpoint at 450 psig consistent with the safety analysis. The RHR suction relief valves are spring loaded, bellows type water relief valves with pressure tolerances and accumulation limits established by Section III of the American Society of Mechanical Engineers (ASME) Code (Ref. 3) for Class 2 relief valves.

Required Action A.1 is modified by a Note that permits two centrifugal charging pumps capable of RCS injection for ≤ 15 minutes to allow for pump swaps.

B.1, C.1, and C.2

An unisolated accumulator requires isolation within 1 hour. This is only required when the accumulator pressure is at or more than the maximum RCS pressure for the existing temperature allowed by the P/T limit curves.

If isolation is needed and cannot be accomplished in 1 hour, Required Action C.1 and Required Action C.2 provide two options, either of which must be performed in the next 12 hours. By increasing the RCS temperature to > 300°F, an accumulator pressure of 639 psig cannot exceed the LTOP limits if the accumulators are fully injected. Depressurizing the accumulators below the LTOP limit also gives this protection.

The Completion Times are based on operating experience that these activities can be accomplished in these time periods and on engineering evaluations indicating that an event requiring LTOP is not likely in the allowed times.

D.1

In MODE 4 when any RCS cold leg temperature is ≤ 300°F, with one PORV inoperable, the PORV must be restored to OPERABLE status

SYS061 A2.06 - Auxiliary / Emergency Feedwater (AFW) System

Ability to (a) predict the impacts of the following malfunctions or operations on the AFW; and (b) based on those predictions, use procedures to correct, control, or mitigate the consequences of those malfunctions or operations: (CFR: 41.5 / 43.5 / 45.3 / 45.13)

Back leakage of MFW .....

Given the following conditions on Unit 1:

- The unit is at 12% RTP preparing to roll the main turbine
- M1A1276 (U1 CA Temp at Chk Vlv 1CA-37) alarms on the OAC
- 1CA-37 (#1 TD CA to S/G D)

Based on the above conditions:

1. In accordance with OP/1/A/6250/002 (Auxiliary Feedwater System), what method would FIRST be used to reduce the temperature at the check valve?

2. How would this action affect the operability of the TD CA Pump?

A. 1. Close 1CA-36 AB (U1 TD CA Pump Disch to 1D S/G Control) and monitor temperature for 15 min.
   2. The U-1 TD CA Pump remains OPERABLE.

B. 1. Close 1CA-36 AB (U1 TD CA Pump Disch to 1D S/G Control) and monitor temperature for 15 min.
   2. The U-1 TD CA Pump shall be declared INOPERABLE.

C. 1. Close 1CA-38B (U1 TD CA Pump Disch to 1D S/G Isol) and start the TD CA pump aligned for recirculation to the UST.
   2. The U-1 TD CA Pump remains OPERABLE.

D. 1. Close 1CA-38B (U1 TD CA Pump Disch to 1D S/G Isol) and start the TD CA pump aligned for recirculation to the UST.
   2. The U-1 TD CA Pump shall be declared INOPERABLE.

General Discussion

The consequence of the situation described would be overheating of the TD CA pump discharge piping which could lead to voiding and ultimately steam binding associated with this pump. The correct response to the alarm associated with OAC point M1A1276 is to reduce CA system piping temperature per OP/1/A/6250/002. Enclosure 4.4 of this procedure directs the operators to first close the control valve on the affected line, which in this case would be 1CA-36AB or the D S/G. If this is unsuccessful, then the pump is run in recirc to cool the discharge line but all of the remaining motor operated control valves would have to be closed first and this would only be done if the closure of the single control valve was not successful. The stem of the question asked for the FIRST action.
The operability of the TD CA pump is affected both by the closure of the Air Operated flow control valves (1CA-36 AB). Above 10% RTP, closing this valve renders the pump inoperable.

Answer A Discussion

INCORRECT: See explanation above.

PLAUSIBLE: Part 1 is correct and therefore plausible.

Part 2 is plausible because it the unit was below 10% RTP the action of closing the control valve would not affect the operability of the associated AFW pump. This answer is plausible because it is possible to close this valve with the unit at power without affecting operability just not at the given power level.

Answer B Discussion

CORRECT: See explanation above.

Answer C Discussion

INCORRECT: See explanation above.

PLAUSIBLE: Part 1 of the answer is plausible because this action is correct but the stem of the question asked for what method would be used First. The method described would only be employed if the closure of the control isolation was not successful but since it is a possible strategy, it is plausible.

art 2 is plausible because it the unit was below 10% RTP the action of closing the control valve would not affect the operability of the associated AFW pump. This answer is plausible because it is possible to close this valve with the unit at power without affecting operability just not at the given power level.

Answer D Discussion

INCORRECT: See explanation above,

PLAUSIBLE: Part 1 of the answer is plausible because this action is correct but the stem of the question asked for what method would be used First. The method described would only be employed if the closure of the control isolation was not successful but since it is a possible strategy, it is plausible.

Part 2 is correct and therefore plausible.

Basis for meeting the KA

Part 2 of this question matches the 'a' part of the KA regarding "predict the impact of the following malfunctions on the AFW". The impact is whether the TD CA pump will remain operable.

Part 1 of this question matches the part 'b' of the KA regarding "using procedures to correct, control, or mitigate the consequences". The procedure in this case is OP/1/A/6250/002, Auxiliary Feedwater System, Enclosure 4.5, Reducing Turbine Driven CA Pump Piping Temperature.

Basis for Hi Cog

This question is Hi Cog because the applicant must evaluate a given set of conditions and through a multipart mental process, determine the required actions based on these conditions. The applicant must futher evaluate the impact of the actions to address the high temperature on the operability of the associated AFW pump.

Basis for SRO only

Part 1 of the question meets the following criteria for an SRO only question as described in the Clarification Guidance for SRO-only Questions Rev 1 dated 03/11/2010 for screening questions linked to 10CFR55.43(b)(5) (Assessment and selection of procedures):

1) The question can NOT be answered solely by knowing systems knowledge. Either of these methods can be used procedurally to cool the TD CA pump piping. Check valve leakage is discussed in the systems lesson plan and the methods to cooldown the TD CA pump are mentioned in general terms (i.e. "close the discharge valve or start the pump"). However, the applicant must have detailed knowledge of the OP to discriminate which method is used FIRST. Since this is an infrequently performed evolution, the actions in the procedure are directed by the CR SRO and not handed off to an RO.
2) The question can NOT be answered by knowing immediate operator actions. None of the actions described are immediate actions.
3) The question can NOT be answered solely by knowing entry conditions for AOP or direct entry conditions for EOPs. These are detailed procedure steps from an infrequently performed OP.

4) The question can NOT be answered solely by knowing the purpose, overal sequence of events, or overall mitigative strategy of the procedure. This is detailed knowledge of procedure step sequence not sequence of events within the procedure.
The question requires detailed knowledge of procedure content. Therefore, it is SRO knowledge.

Part 2 of the question meets the following criteria for an SRO only question as described in the Clarification Guidance for SRO-only Questions Rev 1 dated 03/11/2010 for screening questions linked to 10CFR55.43(b)(2) (Tech Specs):

1) This question can NOT be answered by knowing less than 1 hour Tech Specs
2) This question can NOT be answered by knowing information listed "above-the-line".
3) This question can NOT be answered by knowing the TS Safety Limits.
4) This question required the applicant to analyze the given conditions and make the determination that the TD CA pump is inoperable. The applicant must then recall from memory that the unit can not enter MODE 1 with the TD CA pump INOPERABLE.

Job Level	Cognitive Level	QuestionType	Question Source
SRO	Comprehension	NEW	

Development References	Student References Provided
TS 3.7.5 OP/1/A/6250/002 Auxiliary Feedwater System	

SYS061 A2.06 - Auxiliary / Emergency Feedwater (AFW) System
Ability to (a) predict the impacts of the following malfunctions or operations on the AFW; and (b) based on those predictions, use procedures to correct, control, or mitigate the consequences of those malfunctions or operations: (CFR: 41.5 / 43.5 / 45.3 / 45.13)
Back leakage of MFW .....

401-9 Comments:

Remarks/Status

401-9 Comments:

Must reference the procedure in the stem to fully meet the 2nd part of the KA.

Resolution / Comments:

Revised question 1 in the stem to read "In accordance with OP/1/A/6250/002 (Auxiliary Feedwater System), what method would FIRST be used to reduce the temperature at the check valve?"

See attached file for revised question.

Question 78 References:

3.7.5 Auxiliary Feedwater (AFW) System

LCO 3.7.5 Three AFW trains shall be OPERABLE.

----------NOTE----------
Only one AFW train, which includes a motor driven pump, is required to be OPERABLE in MODE 4.

APPLICABILITY: MODES 1, 2, and 3,
MODE 4 when steam generator is relied upon for heat removal.

ACTIONS

----------NOTE----------
LCO 3.0.4.b is not applicable when entering MODE 1.

CONDITION	REQUIRED ACTION	COMPLETION TIME
A. One steam supply to turbine driven AFW pump inoperable.	A.1 Restore steam supply to OPERABLE status.	7 days AND 10 days from discovery of failure to meet the LCO
B. One AFW train inoperable in MODE 1, 2 or 3 for reasons other than Condition A.	B.1 Restore AFW train to OPERABLE status.	72 hours AND 10 days from discovery of failure to meet the LCO

(continued)

SURVEILLANCE REQUIREMENTS

SURVEILLANCE		FREQUENCY
SR 3.7.5.1	----------NOTE---------- Not applicable to automatic valves when THERMAL POWER is ≤ 10% RTP. ---------- Verify each AFW manual, power operated, and automatic valve in each water flow path, and in both steam supply flow paths to the steam turbine driven pump, that is not locked, sealed, or otherwise secured in position, is in the correct position.	31 days
SR 3.7.5.2	----------NOTE---------- Not required to be performed for the turbine driven AFW pump until 24 hours after ≥ 900 psig in the steam generator. ---------- Verify the developed head of each AFW pump at the flow test point is greater than or equal to the required developed head.	In accordance with the Inservice Testing Program
SR 3.7.5.3	----------NOTE---------- Not applicable in MODE 4 when steam generator is relied upon for heat removal. ---------- Verify each AFW automatic valve that is not locked, sealed, or otherwise secured in position, actuates to the correct position on an actual or simulated actuation signal.	18 months

From OP/1/A/6250/002, Auxiliary Feedwater System:

Enclosure 4.5

Reducing Turbine Driven CA Pump Piping Temperature

1. Limits and Precautions

None

2. Initial Conditions

_____ 2.1 BW System isolated from S/Gs per OP/1/A/6100/SO-5A (B, C, D) (Draining S/G 1A, 1B, 1C, 1D).

3. Procedure

☐ 3.1 Evaluate all outstanding R&Rs that may impact performance of this procedure.

_____ SRO 3.2 Declare #1 TD CA Pump inoperable.

3.3 Close control valve on affected lines:

_____ CV _____ • 1CA-64AB (U1 TD CA Pump Disch to 1A S/G Control)

_____ CV _____ • 1CA-52AB (U1 TD CA Pump Disch to 1B S/G Control)

_____ CV _____ • 1CA-48AB (U1 TD CA Pump Disch to 1C S/G Control)

_____ CV _____ • 1CA-36AB (U1 TD CA Pump Disch to 1D S/G Control)

☐ 3.4 Monitor temperature for 15 - 30 minutes.

_____ 3.5 <u>IF</u> temperatures remain high after 15 - 30 minutes, close isolation valve on affected lines:

_____ CV _____ • 1CA-66AC (U1 TD CA Pump Disch to 1A S/G Isol)

_____ CV _____ • 1CA-54AC (U1 TD CA Pump Disch to 1B S/G Isol)

_____ CV _____ • 1CA-50B (U1 TD CA Pump Disch to 1C S/G Isol)

_____ CV _____ • 1CA-38B (U1 TD CA Pump Disch to 1D S/G Isol)

Unit 1

NOTE:	When opening valves 1CA-36, 48, 52, and 64 from the local panel, the controller needs to be opened 4 - 5 more turns once 100% is reached to minimize the amount that the valves drift close and back open upon returning controller back to control room (A-Remote).

3.6 **AFTER** temperatures have returned to normal, ensure open:

- ____ CV ____ 1CA-64AB (U1 TD CA Pump Disch to 1A S/G Control)
- ____ CV ____ 1CA-52AB (U1 TD CA Pump Disch to 1B S/G Control)
- ____ CV ____ 1CA-48AB (U1 TD CA Pump Disch to 1C S/G Control)
- ____ CV ____ 1CA-36AB (U1 TD CA Pump Disch to 1D S/G Control)
- ____ CV ____ 1CA-66AC (U1 TD CA Pump Disch to 1A S/G Isol)
- ____ CV ____ 1CA-54AC (U1 TD CA Pump Disch to 1B S/G Isol)
- ____ CV ____ 1CA-50B (U1 TD CA Pump Disch to 1C S/G Isol)
- ____ CV ____ 1CA-38B (U1 TD CA Pump Disch to 1D S/G Isol)

3.7 Check the following stable:

- ☐ M1A1439 (U1 CA Temp at Chk Vlv 1CA-65)
- ☐ M1A1421 (U1 CA Temp at Chk Vlv 1CA-53)
- ☐ M1A1294 (U1 CA Temp at Chk Vlv 1CA-49)
- ☐ M1A1276 (U1 CA Temp at Chk Vlv 1CA-37)

_____ 3.8 **IF** increasing temperatures indicates check valve leak by, perform the following:

_____ 3.8.1 Notify System Engineer.

_____ _____/_____
Person Notified Date Time

_____ 3.8.2 Evaluate operating CA Pumps to cool CA System piping.

3.9 Ensure "TURB" released on the following:

_____ • CA Modulating Valves Reset Train A
_____ • CA Modulating Valves Reset Train B

_____ 3.10 Evaluate operability of CA System.
SRO

End of Enclosure

Unit 1

SYS076 A2.01 - Service Water System (SWS)

Ability to (a) predict the impacts of the following malfunctions or operations on the SWS; and (b) based on those predictions, use procedures to correct, control, or mitigate the consequences of those malfunctions or operations: (CFR: 41.5 / 43.5 / 45/3 / 45/13)

Loss of SWS .....

Unit 1 is operating at 100% RTP with 'B' train components in service with a normal RN system alignment. 1B RN pump amps are swinging.

The following annunciators are in alarm:

- "B RN Pump Suction Lo Press"
- "B RN Pump Discharge Lo Press"

Which ONE (1) of the following is the required response to the above conditions based on the implementation of AP-20 (Loss of RN)?

A. Implement Case 1, Loss of Operating RN Train
Swap alignment to the Nuclear Service Water Pond and place the '1A' RN pump in service

B. Implement Case 1, Loss of Operating RN Train
Place the '1A' RN pump in service and remain on Low Level Intake

C. Implement Case 2, Loss of Low level or RC Supply Crossover
Swap alignment to the Nuclear Service Water Pond and place the '1A' RN pump in service

D. Implement Case 2, Loss of Low level or RC Supply Crossover
Place the '1A' RN pump in service and remain on Low Level Intake

---

General Discussion

The swinging amps, lo suction pressure, and lo discharge pressure indicate that the RN pump is cavitating and that the Low Level Intake (LLI) has been lost. Hence Case 2 for Loss of LLI is the appropriate procedure to implement. If the lo suction pressure alarm was not present, it would indicate that the LLI had not been lost and entry into Case 1 Loss of Operating RN Train would be appropriate.

IAW Case 2, the Operators will swap to the Standby Nuclear Service Water Pond (SNSWP) and then swap RN pumps.

Answer A Discussion

INCORRECT: See explanation above.

PLAUSIBLE: This answer is plausible if the applicant does not comprehend that the pump suction lo pressure alarm prompts implementation of Case 2.The other actions are reasonable as they would be the correct actions if Case 2 were implemented.

Answer B Discussion

INCORRECT: See explanation above.

PLAUSIBLE: This answer is plausible if the applicant does not comprehend that the pump suction lo pressure alarm prompts implementation of Case 2. The other indications alone would prompt entry into Case 1. The remaining actions are correct for Case 1.

Answer C Discussion

CORRECT: See explanation above.

Answer D Discussion

INCORRECT: See explanation above.

PLAUSIBLE: This answer is plausible because Case 2 is the correct case to implement. The actions are correct if Case 1 had been implemented.

Basis for meeting the KA

KA is matched because the candidate must evaluate the provided conditions to determine the impact on the system and determine from those indications which is the appropriate procedural strategy.

Basis for Hi Cog

Basis for SRO only

This question meets the following criteria for an SRO only question as described in the Clarification Guidance for SRO-only Questions Rev 1 dated 03/11/2010 for screening questions linked to 10CFR55.43(b)(5) (Assessment and selection of procedures):

1) The question can NOT be answered solely by knowing systems knowledge. The question required the applicant to have detailed knowledge of AP-20 content.
2) The question can NOT be answered by knowing immediate operator actions. There are no immediate actions associated with AP-20.
3) The question can NOT be answered solely by knowing entry conditions for AOP or direct entry conditions for EOPs. The question requires the applicant to have detailed knowledge of AP-20 content.
4) The question can NOT be answered solely by knowing the purpose, overal sequence of events, or overall mitigative strategy of the procedure. This is detailed knowledge of procedure step sequence not sequence of events within the procedure. The question requires the applicant to have detailed knowledge of AP-20 content.
5) The question requires the applicant to analyze plant conditions and determine which section of the procedure to use to mitigate the consequences of the accident. Once the applicant determines which section of the procedure is required, they must recall from memory the actions that are directed to mitgate the accident (detail knowledge of procedure content). Therefore, this is an SRO level question.

Job Level	Cognitive Level	QuestionType	Question Source
SRO	Memory	BANK	MNS 2009 NRC Q80

Development References	Student References Provided
AP/1/A/5500/20, Loss of RN, rev. 25 pages 2 and 29 - 35.	

YS076 A2.01 - Service Water System (SWS)
Ability to (a) predict the impacts of the following malfunctions or operations on the SWS; and (b) based on those predictions, use procedures to correct, control, or mitigate the consequences of those malfunctions or operations: (CFR: 41.5 / 43.5 / 45/3 / 45/13)
Loss of SWS .....

2010 MNS SRO NRC Examination

QUESTION 79

2579

C

401-9 Comments:

Remarks/Status

Proposed replacement for 2010 NRC Q-79.

Replacement question approved. RFA 07/06/10

Question 79 Proposed Replacement References:

From AP-20:

MNS AP/1/A/5500/20 UNIT 1	LOSS OF RN Case I Loss of Operating RN Train	PAGE NO. 2 of 111 Rev. 29

ACTION/EXPECTED RESPONSE | OBTAINED

Plausibility for entry into Case 1

B. Symptoms

- "A RN PMP DISCHARGE LO PRESS" alarm
- "B RN PMP DISCHARGE LO PRESS" alarm
- "A RN PUMP ABNORMAL FLO" alarm
- "B RN PUMP ABNORMAL FLO" alarm
- RN Non-Essential Header pressure low
- RN pump tripped
- Indications of significant RN pump cavitation (flow, pressure, amps swinging)
- Entry into this AP has been specified by another procedure.

C. Operator Actions

1. Check for potential loss of LLI as follows:

   __ • Check Unit 2 RN pump(s) that are aligned to LLI - OPERATING PROPERLY.

   __ • Check suction flowpath – AVAILABLE.

   __ IF loss of LLI suction supply to RN pumps is believed to have occurred, THEN GO TO Case II (Loss of Low Level or RC Supply Crossover).

__ 2. Announce occurrence on page.

__ 3. Check if significant RN pump cavitation (flow, pressure, amps swinging) - IS OCCURRING.

__ GO TO Step 6.

ACTION/EXPECTED RESPONSE	RESPONSE NOT OBTAINED

B. Symptoms

- "A RN PMP SUCTION LO PRESS" alarm
- "B RN PMP SUCTION LO PRESS" alarm
- "A RN PMP DISCHARGE LO PRESS" alarm
- "B RN PMP DISCHARGE LO PRESS" alarm
- 1A RN pump amps indicate low
- 1B RN pump amps indicate low
- Visual observation of Cowans Ford Dam failure with potential loss of LLI
- Notification from plant personnel of potential loss of LLI
- Indications of significant RN pump cavitation (flow, pressure, amps swinging) on both units
- Entry into this AP has been specified by another procedure.

ACTION/EXPECTED RESPONSE	RESPONSE NOT OBTAINED

C. Operator Actions

CAUTION Steps 1 through 18 are time critical and must be performed without delay.

NOTE
- Case II (Loss of Low Level or RC Supply Crossover) is identical in both unit's AP20 and only needs to be completed once.
- Shared RN valves can be operated from either unit's control switch.

__ 1. OPEN 0RN-9B (Train 1B & 2B SNSWP Supply).	__ GO TO Step 8.
__ 2. Check if failure of Cowans Ford Dam or LLI - BELIEVED TO HAVE OCCURRED.	Perform the following: __ a. IF this AP entered from RP/0/A/5700/007 (Earthquake), THEN GO TO Step 7. __ b. IF this AP entered from AP/0/A/5500/47 (Security Events), THEN GO TO Step 8. __ c. GO TO Step 4.
__ 3. GO TO Step 7.	
__ 4. Check if significant RN pump cavitation (flow, pressure, amps swinging) - WAS OCCURRING PRIOR TO ENTRY INTO THIS PROCEDURE.	__ GO TO Step 8.
__ 5. Check if opening 0RN-9B (Train 1B & 2B SNSWP Supply) - STOPPED CAVITATION.	__ GO TO Step 8.
__ 6. GO TO Enclosure 1 (Aligning B Train RN to Pond).	

ACTION/EXPECTED RESPONSE	RESPONSE NOT OBTAINED
__ 7. **Check "OBE EXCEEDED" alarm (1AD-13, E-7) - DARK.**	**IF RN pump on either unit is experiencing significant cavitation (flow, pressure, amps swinging), THEN isolate non-seismic piping as follows:** __ a. CLOSE 1RN-42A (AB Non Ess Supply Isol). __ b. Have Unit 2 CLOSE 2RN-42A (AB Non Ess Supply Isol).
__ 8. **Check 1A sequencer reset light - LIT.**	**Perform the following:** __ a. Reset S/I. __ b. Reset sequencers. __ c. IF 1A sequencer reset light is lit, THEN GO TO Step 9. __ d. Dispatch operator to open 1EVDA Breaker 6 (1A DVG Sequencer DC Control Power). __ e. IF 0RN-7A (Train 1A & 2A SNSWP Supply) switch indication is lit, THEN depress and hold 1A sequencer pushbutton until 1EVDA Breaker 6 is open.

ACTION/EXPECTED RESPONSE	RESPONSE NOT OBTAINED
__ 9 **Have Unit 2 operator check 2A sequencer reset light - LIT.**	**Have Unit 2 operator perform the following:** __ a. Reset S/I on Unit 2. __ b. Reset sequencers on Unit 2. __ c. IF 2A sequencer reset light is lit, THEN GO TO Step 10. __ d. Dispatch operator to open Unit 2 breaker 2EVDA Breaker 6 (2A D/G Sequencer DC Control Power). __ e. IF 0RN-7A (Train 1A & 2A SNSWP Supply) switch indication is lit, THEN depress and hold 2A sequencer pushbutton until 2EVDA Breaker 6 is open.
__ 10 **OPEN 0RN-7A (Train 1A & 2A SNSWP Supply)**	
__ 11 **Wait up to 60 seconds for 0RN-7A to open.**	

ACTION/EXPECTED RESPONSE	RESPONSE NOT OBTAINED
__ 12. **Check 0RN-7A (Train 1A & 2A SNSWP Supply) - OPEN.**	**Perform the following:**
	a. **IF AT ANY TIME** 1A **OR** 2A RN pump cavitates, **THEN** perform the following:
	__ 1) **IF** 1A D/G is running, **THEN** immediately dispatch operator to stop 1A D/G using emergency stop pushbutton.
	__ 2) **IF** 1A CA pump is running, **THEN** open 1A CA pump breaker by depressing "START" and "STOP" at the same time.
	__ 3) Stop 1A RN pump.
	__ 4) **IF** Unit 2A D/G is running, **THEN** immediately dispatch operator to stop Unit 2A D/G using emergency stop pushbutton.
	__ 5) **IF** Unit 2A CA pump is running, **THEN** notify Unit 2 operator to open 2A CA pump breaker by depressing "START" and "STOP" at the same time.
	__ 6) Notify Unit 2 operator to stop 2A RN pump.
	b. **IF** both of the following conditions are met:
	__ • All "A" train shared RN valves - DEENERGIZED
	__ • 1ETA or 2ETA - ENERGIZED,
	THEN swap "A" train shared RN valve power to opposite unit as follows:
	__ 1) Dispatch operator to swap 1EMXH to opposite unit **PER** Enclosure 12 (Shifting Power Supplies to 1EMXH).

ACTION/EXPECTED RESPONSE	RESPONSE NOT OBTAINED
__ 13. **Check 0RN-CD (Train 1D & 2D 3N3WP Supply) - OPEN.**	**Perform the following:** a. **IF AT ANY TIME 1D OR 2D RN pump cavitates, THEN perform the following:** __ 1) **IF 1B D/G is running, THEN immediately dispatch operator to stop 1B D/G using emergency stop pushbutton.** __ 2) **IF 1D CA pump is running, THEN open 1B CA pump breaker by depressing "START" and "STOP" at the same time.** __ 3) **Stop 1B RN pump.** __ 4) **IF Unit 2B D/G is running, THEN immediately dispatch operator to stop Unit 2B D/G using emergency stop pushbutton.** __ 5) **IF Unit 2D CA pump is running, THEN notify Unit 2 operator to open 2D CA pump breaker by depressing "START" and "STOP" at the same time.** __ 6) **Notify Unit 2 operator to stop 2D RN pump.** b. **IF both of the following conditions are met:** __ • **All "B" train shared RN valves DEENERGIZED** __ • **1ETB or 2ETB - ENERGIZED,** **THEN swap "B" train shared RN valve power to opposite unit as follows:** __ 1) **Dispatch operator to swap 2EMXH to opposite unit PER Enclosure 13 (Shifting Power Supplies to 2EMXH).**

ACTION/EXPECTED RESPONSE	RESPONSE NOT OBTAINED
__ 14. **Check RN pumps on both units - ANY PUMP SUSPECTED OF BEING AIR BOUND.**	__ **GO TO** Step 16.
15. **Perform the following on both units:**	
__ a. Check any Unit 1 or Unit 2 emergency D/G - RUNNING WITHOUT RN FLOW TO ASSOCIATED D/G HX.	__ a. **GO TO** Step 15.e.
__ b. Check 0RN-7A (Train 1A & 2A SNSWP Supply) - OPEN.	__ b. **GO TO** Step 15.d.
c. CLOSE the following valves:	
__ • 0RN-12AC (Train 1A & 2A LLI Supply)	
__ • 0RN-13A (Train 1A & 2A LLI Supply).	
__ d. Immediately dispatch operator to stop D/G running without cooling water using emergency stop pushbutton.	
__ e. Check any Unit 1 or Unit 2 MD CA pump - RUNNING ON RN TRAIN THAT IS AIR BOUND.	__ e. **GO TO** Step 15.g.
__ f. Open affected CA pump breaker by depressing "START" and "STOP" at the same time.	
__ g. Stop any Unit 1 or Unit 2 RN pump that is air bound.	
__ h. Check 1A RN pump - AIR BOUND.	__ h. **GO TO** Step 15.k.
__ i. Check 0RN-7A (Train 1A & 2A SNSWP Supply) - OPEN.	__ i. **GO TO** Step 15.k.
__ j. Dispatch operator to vent 1A RN pump **PER** Enclosure 7 (1A RN Pump Venting).	
__ k. Check 1B RN pump - AIR BOUND.	__ k. **GO TO** Step 15.n.
__ l. Check 0RN-9B (Train 1B & 2B SNSWP Supply) - OPEN.	__ l. **GO TO** Step 15.n.

ACTION/EXPECTED RESPONSE	RESPONSE NOT OBTAINED
15. (Continued)	
__ m. Dispatch operator to vent 1B RN pump **PER** Enclosure 8 (1B RN Pump Venting).	
__ n. Check Unit 2A RN pump - AIR BOUND.	__ n. **GO TO** Step 15.q.
__ o. Check 0RN-7A (Train 1A & 2A SNSWP Supply) - OPEN.	__ o. **GO TO** Step 15.q.
__ p. Dispatch operator to vent 2A RN pump **PER** AP/2/A/5500/20 (Loss Of RN), Enclosure 7 (2A RN Pump Venting).	
__ q. Check Unit 2B RN pump - AIR BOUND.	__ q. **GO TO** Step 16.
__ r. Check 0RN-9B (Train 1B & 2B SNSWP Supply) - OPEN.	__ r. **GO TO** Step 16.
__ s. Dispatch operator to vent 2B RN pump **PER** AP/2/A/5500/20 (Loss Of RN), Enclosure 8 (2B RN Pump Venting).	
__ 16. Announce occurrence on page.	

ACTION/EXPECTED RESPONSE	RESPONSE NOT OBTAINED
17. **Align A Train RN to the pond as follows:**	
__ a. **Check 0RN-7A (Train 1A & 2A SNSWP Supply) - OPEN.**	a. Perform the following: __ 1) IF operator has been dispatched to perform Enclosure 12 (Shifting Power Supplies to 1EMXH), **THEN GO TO** Step 18. __ 2) IF 1A D/G is running, **THEN** immediately dispatch operator to stop 1A D/G using emergency stop pushbutton. __ 3) IF 1A CA pump is running, **THEN** open 1A CA pump breaker by depressing "START" and "STOP" at the same time. __ 4) Stop 1A RN pump. __ 5) IF Unit 2A D/G is running, **THEN** immediately dispatch operator to stop Unit 2A D/G using emergency stop pushbutton. __ 6) IF Unit 2A CA pump is running, **THEN** notify Unit 2 operator to open 2A CA pump breaker by depressing "START" and "STOP" at the same time. __ 7) Notify Unit 2 operator to stop 2A RN pump. 8) IF designated RN back-flush operator in effect, **THEN** notify designated operator to ensure the following valves are CLOSED and remain CLOSED: __ • 1RN-20 (1A RN Strainer Backflush Manual Supply Isol) (aux bldg, 716+9, BB-52, room 600, 2' west from strainer 1A) __ • Unit 2 valve 2RN-20 (2A RN Strainer Backflush Manual Supply Isol) (aux bldg, 716+2,CC-53,). __ 9) IF 0RN-7A is fully closed, **THEN GO TO** Step 17.e.

Parent Question (MNS 2009 NRC Exam):

Examination Outline Cross-reference:	Level	RO	SRO
			X
	Tier #	2	
Final	Group #	1	
	K/A #	076A2.01	
	Importance Rating		3.7

Service Water

Ability to (a) predict the impacts of the following on the (SYTEM) and (b) based on those predictions, use procedures to correct, control, and mitigate the consequences of those abnormal operation:

Loss of SWS

Proposed Question: SRO 80

1 Pt

Unit 1 is operating at 100% RTP with 'B' train components in service with a normal RN system alignment. 1B RN pump amps are swinging.

The following annunciators are in alarm:

- "B RN Pump Suction Lo Press"
- "B RN Pump Discharge Lo Press"

Which ONE (1) of the following is the correct response to the above conditions based on the implementation of AP-20 (Loss of RN)?

A. Implement Case 1, Loss of Operating RN Train
Place the '1A' RN pump in service and,
Remain on Low Level Intake

B. Implement Case 1, Loss of Operating RN Train
Swap alignment to the Nuclear Service Water Pond and,
Place the '1A' RN pump in service

C. Implement Case 2, Loss of Low level or RC Supply Crossover
Place the '1A' RN pump in service and,
Remain on Low Level Intake

D. Implement Case 2, Loss of Low level or RC Supply Crossover
Swap alignment to the Nuclear Service Water Pond and,
Place the '1A' RN pump in service

Proposed Answer: **D**

Explanation (Optional):

The swinging amps, lo suction pressure, and lo discharge pressure indicate that the RN pump is cavitating and that the Low Level Intake (LLI) has been lost. Hence Case 2 for Loss of LLI is the appropriate procedure to implement. If the lo suction pressure alarm was not present, it would indicate that the LLI had not been lost and entry into Case 1 Loss of Operating RN Train would be appropriate.

IAW Case 2, the Operators will swap to the Standby Nuclear Service Water Pond (SNSWP) and then swap RN pumps.

A. **Incorrect:** See explanation above. **Plausible** if candidate does not comprehend that the pump suction lo pressure alarm prompts implementation of Case 2. The other indications alone would prompt entry into Case 1. The remaining actions are correct for Case 1.
B. **Incorrect:** See explanation above. **Plausible** if candidate does not comprehend that the pump suction lo pressure alarm prompts implementation of Case 2.The other actions are reasonable as they would be the correct actions if Case 2 were implemented.
C. **Incorrect:** See explanation above. **Plausible** because Case 2 is the correct case to implement. The actions are correct if Case 1 had been implemented.
D. **Correct.**

Technical Reference(s): AP/1/A/5500/20, Loss of RN, rev. 25 pages 2 and 29 - 35. (Attach if not previously provided)

(Including version or revision #)

Proposed references to be provided to applicants during examination: None

Learning Objective: OP-MC-AP-20, Obj. 2 (As available)

Question Source:
Bank # _____
Modified Bank # NRC Bank (Note changes or attach parent)
New _____

Question History: Last NRC Exam Nadeau Retake Exam

Question Cognitive Level:
Memory or Fundamental Knowledge X
Comprehension or Analysis _____

10 CFR Part 55 Content:
55.41 _____
55.43 43.5

Comments:
Service Water

Ability to (a) predict the impacts of the following on the (SYTEM) and (b) based on those predictions, use procedures to correct, control, and mitigate the consequences of those abnormal operation:

Loss of SWS

KA is matched because the candidate must evaluate the provided conditions to determine the impact on the system and determine from those indications which is the appropriate procedural strategy.

This question is an SRO Only question linked to 10CFR55.43(b)(5) (Procedures) because the question can NOT be answered by knowing systems knowledge alone, it can NOT be answered by knowing immediate actions from AP-20, and it can NOT be answered by knowing AP-20 entry conditions alone. It DOES REQUIRE the candidate to recall the AP-20 mitigating strategy and specific procedure steps within the body of AP-20 to be able to correctly answer the question.

Modification to stem in Atlanta.

SYS063 2.1.23 - DC Electrical Distribution System
SYS063 GENERIC
Ability to perform specific system and integrated plant procedures during all modes of plant operation. (CFR: 41.10 / 43.5 / 45.2 / 45.6)

With both Units at 100% RTP the following occurs:

- Loss of Offsite Power occurred on Unit 1
- Both DGs started and loaded as designed
- 1A D/G subsequently trips on overspeed
- At Step 17 of ES 0.1 (Reactor Trip Response), the decision is made to implement AP-07 (Loss of Electrical Power)

Which ONE (1) of the following describes the Time Critical actions directed by the CRS to mitigate this event per AP-07?

A. Complete Enc. 7 (DC Bus Alignment) to realign Battery Charger EVCA to Unit 2 within one hour.

B. Complete Enc. 7 (DC Bus Alignment) to realign Battery EVCA to Battery Charger EVCS within one hour.

C. Complete Generic Enc. 13 (VC and VA System Operation) to restart the Train A VC/YC Chiller within 37.5 minutes.

D. Complete Generic Enc. 13 (VC and VA System Operation) to swap Train A VC/YC Chiller power and water to Unit 2 and restart chiller within 1 hour and 15 minutes.

General Discussion

In the scenario described, Battery Charger EVCA would be off due to the tripped D/G 1A. Step 20 directs the implementation of AP-07 Enc. 7 which provides direction for local actions to align EVCA Battery Charger to U-2 and restart the charger. This is required to be complete within one hour to prevent loss of the battery which is designed to provide power for one hour.

Answer A Discussion

CORRECT: See explanation above

Answer B Discussion

INCORRECT: See explanation aboveBattery charger EVCS would only be utilized if it was aligned to the battery prior to the event. This would only be true if Battery Charger was out of service which is not indicted in the initial conditions.

PLAUSIBLE: Because it is the correct Enclosure, time frame and action if EVCS was in service. EVCS charger can be powered from either unit and be aligned to any vital battery so without familiarity with this enclosure this would seem a logical course of action.

Answer C Discussion

INCORRECT: See explanation above. The Train A VC/YC Chiller is normally powered from U-1 "A" Train Vital bus which is deenergized due to the failed 1A D/G.

PLAUSIBLE: Because it is the correct enclosure, correct action and Time requirement if the A VC/YC was available. This chiller can be powered from U-2 but is normally aligned to U-1. The 'time critical' for manually selecting the other chiller if a VC chiller fails is 37.5 minutes.

Answer D Discussion

INCORRECT: See explanation above. See explanation above.Train A VC/YC power and water only need to be swapped if a station blackout has occurred and that both D/G's on one unit fail.

PLAUSIBLE: Because Step 17 of AP-17 directs implementation of this Enclosure within 30 min and should the event be consistent with the need to perform this action, the enclosure and time requirements are correct. If a station blackout occurs and a VC chiller cannot be started due to a loss of power to the chiller, its power supply must be swapped to the opposite unit and the chiller started within 1 hour and 15 minutes from the time of the blackout.

Basis for meeting the KA

KA is matched the question is addressing actions required to recover from a reactor trip due to a LOOP associated with Unit 1 as directed by ES 0.1 and AP-7. In order to successfully answer the question the candidate is required to have a detailed integrated plant procedure knowledge associated with the DC electrical distribution system as well as knowledge of local Time Critical operator actions directed by these procedures along with the associated operational implications of not performing those actions within the given time constraints.

Basis for Hi Cog

The analysis cog level is justified because the candidate must evaluate a given plant scenario, determine equipment availability and using procedural knowledge, determine the required course of action.

Basis for SRO only

This question meets the following criteria for an SRO only question as described in the "Clarification Guidance for SRO-only Questions (Rev 1 dated 03/11/2010)" under the Screening Criteria for question linked to 10CFR55.43(b)(5) (Assessment and Selection of Procedures):

1) The question can NOT be answered by knowing systems knowledge alone.
2) The question can NOT be answered by knowing immediate Operator actions.
3) The question can NOT be answered by knowing AOP or EOP entry conditions.
4) The question can NOT be answered by knowing the purpose, overall sequence of events, or overall mitigative strategy of the procedure.
5) The question requires the applicant to assess plant conditions and recall specific procedure content from AP-07. It requires the applicant to have an understanding of the specific procedural requirements associated with two different enclosures and the associated basis for those actions. Therefore, this is an SRO level question.

Job Level	Cognitive Level	QuestionType	Question Source
SRO	Comprehension	BANK	MNS Bank NRC Q100

Development References

P/07, Loss of Electrical Power (Rev 28) page 9
-07, Loss of Electrical Power Bkgd (Rev 7)
Pgs 14 & 15

OP-MC-AP-07 Obj: 2

Student References Provided

SYS063 2.1.23 - DC Electrical Distribution System

YS063 GENERIC

.bility to perform specific system and integrated plant procedures during all modes of plant operation. (CFR: 41.10 / 43.5 / 45.2 / 45.6)

401-9 Comments:

Remarks/Status
401-9 Comments: No comment. ---------- ---------- Resolution / Comments: N/A

Question 80 References:

OP-MC-AP-07 Obj: 3

OBJECTIVES

	OBJECTIVE	NLO	NLOR	LPRO	LPSO	LOR
1	Concerning AP/0/5500/7 (Loss of Electrical Power): • State the purpose of the AP • Recognize the symptoms that would require implementation of the AP. AP7001			X	X	X
2	Given scenarios describing accident events and plant conditions, evaluate the basis for any caution, note, or step. AP7002			X	X	X
3	State from memory the Immediate Action(s) and the Response Not Obtained (RNO). SC002			X	X	X

ACTION/EXPECTED RESPONSE	RESPONSE NOT OBTAINED
CAUTION **If operating train of VC/YC has failed, it may be time critical to swap operating VC/YC trains.**	
__ 17. **Initiate EP/1/A/5000/G-1 (Generic Enclosures), Enclosure 13 (VC And VA System Operation) within 30 minutes of B/O.**	
__ 18. **Check S/G Pressures - STABLE OR GOING UP.**	**IF AT ANY TIME S/G pressure goes down in an uncontrolled manner AND reactor tripped, THEN CLOSE the following valves:** __ • All MSIVs __ • All MSIV bypass valves.

From AP-07 Bkgd Doc (Loss of Electrical Power) Pg 13

UNIT 1 CASE I STEP 17:
UNIT 2 CASE I STEP 15:

PURPOSE:

Ensure control room equipment temperature habitability is maintained.

DISCUSSION:

Excessive control room ambient temperatures could lead to redundant vital control room equipment failures. If the selected train chiller fails (or it' power supply), the opposite chiller doesn't auto start. It's calculated in this type scenario if the opposite train chiller is started (must be done manually) within 37.5 minutes from the onset of the blackout, then equipment habitability will be maintained. If the enclosure is initiated within 30 minutes, then the few minutes it takes to diagnose the failure of the selected train, swap trains, and manually start the opposite train chiller can be accomplished in less than 7.5 minutes.

Other ventilation concerns (containment cooling, etc.) are addressed later in the procedure. This step was separated from them and moved earlier in the procedure (here) because of the potential time critical concern.

REFERENCES:
PIP M98-383
Calc MCC 1211.00-33.0006

ACTION/EXPECTED RESPONSE	RESPONSE NOT OBTAINED
19. **Check the following DC pumps start as required:**	
__ a. Check Unit 1 6900V busses - AT ZERO VOLTS.	__ a. Observe Caution prior to Step 20 and GO TO Step 20.
__ b. Main Turbine "EMERG BRG OIL PUMP".	__ b. Start pump.
__ c. "DC B/U VAP EXTRACTOR".	__ c. Start vapor extractor.
__ d. "A CF PUMP TURB EBOP".	__ d. Start pump.
__ e. "B CF PUMP TURB EBOP".	__ e. Start pump.
__ f. Check OAC - AVAILABLE.	f. Perform the following: __ 1) Dispatch operator to ensure Unit 1 "AIR SIDE BACKUP" pump running (Unit 1 Turbine Bldg, 760, 1F-23). __ 2) Observe Caution prior to Step 20 and GO TO Step 20.
__ g. Check computer point M1D0581 (U1 Gen Air Side Seal Oil Backup Pump) - ON.	__ g. Dispatch operator to ensure Unit 1 "AIR SIDE BACKUP" pump running (Unit 1 Turbine Bldg, 760, 1F-23).

CAUTION **If any battery charger has lost power, then restarting the charger(s) in Enclosure 7 (DC Bus Alignment) is time critical.**

__ 20. **Have available licensed operator initiate Enclosure 7 (DC Bus Alignment) within 30 minutes of B/O.**

From AP-07 Bkgd Doc (Loss of Electrical Power) Pg 14

UNIT 1 CASE I STEP 19:
UNIT 2 CASE I STEP 17:

PURPOSE:

Ensure the major turbine building equipment (Main Turbine, CF Pumps, etc.) receive emergency DC powered lubrication following a loss of offsite AC power.

DISCUSSION:

This equipment may remain rotating for a period of time following the loss of offsite AC power. While rotating, lubrication is still required to prevent damage. Therefore, direction is provided to ensure the DC powered lubrication pumps are running to supply this lubrication. There is also a DC powered pump to ensure seal oil pressure to prevent a loss of generator hydrogen.

REFERENCES:

UNIT 1 CASE I STEP 20 CAUTION:
UNIT 2 CASE I STEP 18 CAUTION:

PURPOSE:

Cue the Operator the following step should have sufficient focus to ensure completion to meet the time critical nature of the step.

DISCUSSION:

The time critical nature of the step is: If power supply is lost to an essential battery charger (LOOP with failure of 1 D/G), it must be swapped to the other unit within an hour (MCC-1381.05-000-0220, 125VDC Vital Battery and Battery Charger Calculation).

The following step cues the operator to "start" the enclosure within 30 minutes. There is additional time critical assumptions made once the enclosure is initiated, so this caution ensures the operator is aware of these requirements.

REFERENCES:

Parent Question:

1 Pt Both Units are operating at 100% RTP.

- Loss of Offsite Power occurred on Unit 1
- Both DGs started and loaded as designed
- 1A D/G subsequently trips on overspeed
- At Step 17 of ES 0.1 (Reactor Trip Response), the decision is made to implement AP-07 (Loss of Electrical Power)

Which ONE (1) of the following correctly describes the Time Critical local operator actions associated with AP-07?

A. Implement Enc. 7 (DC Bus Alignment) to realign Battery Charger EVCA to Unit 2 within one hour.

B. Implement Enc. 7 (DC Bus Alignment) to realign Battery EVCA to Battery Charger EVCS within one hour.

C. Implement Generic Enc. 13 (VC and VA System Operation) to restart the Train A VC/YC Chiller within 37.5 minutes.

D. Implement Generic Enc. 13 (VC and VA System Operation) to swap Train A VC/YC Chiller power and water to Unit 2 and restart chiller within 1 hour and 15 minutes.

Proposed Answer: **A**

SYS015 A2.01 - Nuclear Instrumentation System (NIS)

Ability to (a) predict the impacts of the following malfunctions or operations on the NIS; and (b based on those predictions, use procedures to correct, control, or mitigate the consequences of those malfunctions or operations: (CFR: 41.5 / 43.5 / 45.3 / 45.5)

Power supply loss or erratic operation .....

Given the following conditions on Unit 1:

- The unit is currently at 80% RTP with a power increase in progress
- Power Range channel N-43 fails due to a faulty power supply
- N-43 has been removed from service in accordance with AP-16 (Malfunction of Nuclear Instrumentation)
- N-43 will be repaired in approximately 6 hours

1. In accordance with Tech Spec 3.2.4 (QPTR), Quadrant Power Tilt Ratios shall be determined by _____.

2. Quadrant Power Tilt limits prevent exceeding _____ power distribution design limits.

Which ONE (1) of the following completes the statements above?

A. 1. calculation using the remaining three Power Range channels <u>OR</u> movable incore detectors
   2. RADIAL

B. 1. using the movable incore detectors <u>ONLY</u>
   2. RADIAL

C. 1. calculation using the remaining three Power Range channels <u>OR</u> movable incore detectors
   2. AXIAL

D. 1. using the movable incore detectors <u>ONLY</u>
   2. AXIAL

General Discussion

With a power range channel out of service and power greater than 75% RTP, QPTR shall be determined by performing SR 3.2.4.2 (using incore detectors). If power was less than 75% RTP, QPTR is determined by calculation using the remaining three power range channels (SR 3.2.4.1). However, surveillance SR 3.2.4.1 allows performance of SR 3.2.4.2. (using incore detectors) in place of 3.2.4.1.

In accordance with Tech Spec 3.2.4 Basis:

"The QPTR limit ensures that the gross radial power distribution remains consistent with the design values used in the safety analyses."

Answer A Discussion

INCORRECT: See explanation above.

PLAUSIBLE: Part 1 is plausible because this would be correct if power was less than 75% RTP.

Part 2 is correct.

Answer B Discussion

CORRECT: See explanation above.

Answer C Discussion

INCORRECT. See explanation above.

PLAUSIBLE: Part 1 is plausible because this would be correct if power was less than 75% RTP.

Part 2 is plausible if the applicant has the misconception that Quadrant Power Tilt limits prevent exceeding RADIAL distribution limits and AFD limits prevent exceeding AXIAL distribution limits.

Answer D Discussion

INCORRECT. See explanation above.

PLAUSIBLE: Part 1 is correct.

Part 2 is plausible if the applicant has the misconception that Quadrant Power Tilt limits prevent exceeding RADIAL distribution limits and AFD limits prevent exceeding AXIAL distribution limits.

Basis for meeting the KA

The KA is matched because a power supply failure for an NIS channel has occurred and the applicant must determine the impact on Quadrant Power Tilt determination in accordance with Tech Spec requirements.

Basis for Hi Cog

Basis for SRO only

This question meets the following criteria for an SRO only question as described in the "Clarification Guidance for SRO-only Questions (Rev 1 dated 03/11/2010)" under the Screening Criteria for question linked to 10CFR55.43(b)(2) (Tech Specs):

1) It can NOT be answered solely by knowing < 1 hour Tech Specs
2) It can NOT be answered solely by knowing the LCO/TRM information listed "above-the-line"
3) It can NOT be answered by knowing the Tech Spec Safety Limits or their bases
4) It requires the applicant to have specific knowledge of surviellance requirements (SR 3.2.4.1 & 3.2.4.3) which are "below the line" and are greater than 1 hour surveillances. The applicant must also have knowledge of information contained in the Tech Spec 3.2.4 Basis Document. Specifically, the reason for having Quadrant Power Tilt limits (i.e. to prevent exceeding RADIAL power distribution limits) is contained in the Tech Spec basis document and in the surveillance requirements.

Job Level	Cognitive Level	QuestionType	Question Source
SRO	Memory	NEW	

Development References

Learning Objective:
1) IC-ENB #19

References:

Student References Provided

2010 MNS SRO NRC Examination QUESTION 81

2581

B

1) Technical Specification 3.2.4 QPTR
Technical Specification 3.2.4 Basis

SYS015 A2.01 - Nuclear Instrumentation System (NIS)

Ability to (a) predict the impacts of the following malfunctions or operations on the NIS; and (b based on those predictions, use procedures to correct, control, or mitigate the consequences of those malfunctions or operations: (CFR: 41.5 / 43.5 / 45.3 / 45.5)

Power supply loss or erratic operation .....

401-9 Comments:

Remarks/Status
401-9 Comments: No comment. ---------- Resolution / Comments: N/A

Question 81 References:

From Tech Spec 3.2.4 QPTR:

SURVEILLANCE REQUIREMENTS

SURVEILLANCE		FREQUENCY
SR 3.2.4.1	----------NOTES---------- 1. With input from one Power Range Neutron Flux channel inoperable and THERMAL POWER <75% RTP, the remaining three power range channels can be used for calculating QPTR. 2. SR 3.2.4.2 may be performed in lieu of this Surveillance. ---------- Verify QPTR is within limit by calculation.	7 days AND Once within 12 hours and every 12 hours thereafter with the QPTR alarm inoperable
SR 3.2.4.2	----------NOTES---------- Only required to be performed if input from one or more Power Range Neutron Flux channels are inoperable with THERMAL POWER ≥ 75% RTP. ---------- Verify QPTR is within limit using the movable incore detectors.	12 hours

From Tech Spec 3.2.4 Basis:

B 3.2 POWER DISTRIBUTION LIMITS

B 3.2.4 QUADRANT POWER TILT RATIO (QPTR)

BASES

BACKGROUND

The QPTR limit ensures that the gross radial power distribution remains consistent with the design values used in the safety analyses. Precise radial power distribution measurements are made during startup testing, after refueling, and periodically during power operation.

The power density at any point in the core must be limited so that the fuel design criteria are maintained. Together, LCO 3.2.3, "AXIAL FLUX DIFFERENCE (AFD)," LCO 3.2.4, and LCO 3.1.6, "Control Rod Insertion Limits," provide limits on process variables that characterize and control the three dimensional power distribution of the reactor core. Control of these variables ensures that the core operates within the fuel design criteria and that the power distribution remains within the bounds used in the safety analyses.

APPLICABLE SAFETY ANALYSES

This LCO precludes core power distributions that violate the following fuel design criteria:

a. During a large break loss of coolant accident (LOCA), there must be a high level of probability that the peak cladding temperature does not exceed 2200°F (Ref. 1);

b. The DNBR calculated for the hottest fuel rod in the core must be above the approved DNBR limit. (The LCO alone is not sufficient to preclude DNB criteria violations for certain accidents, i.e., accidents in which the event itself changes the core power distribution. For these events, additional checks are made in the core reload design process against the permissible statepoint power distributions.);

c. During an ejected rod accident, the energy deposition to the fuel must not exceed 280 cal/gm (Ref. 2); and

d. The control rods must be capable of shutting down the reactor with a minimum required SDM with the highest worth control rod stuck fully withdrawn (Ref. 3).

The LCO limits on the AFD, the QPTR, the Heat Flux Hot Channel Factor ($F_Q(X,Y,Z)$), the Nuclear Enthalpy Rise Hot Channel Factor ($F_{\Delta H}(X,Y)$), and control bank insertion are established to preclude core power distributions that exceed the safety analyses limits.

BASES

ACTIONS (continued)

reaching RTP. As an added precaution, if the core power does not reach RTP within 24 hours, but is increased slowly, then the peaking factor surveillances must be performed within 48 hours of the time when the more restrictive of the power level limit determined by Required Action A.1 or A.2 is exceeded. These Completion Times are intended to allow adequate time to increase THERMAL POWER to above the more restrictive limit of Required Action A.1 or A.2, while not permitting the core to remain with unconfirmed power distributions for extended periods of time.

Required Action A.7 is modified by a Note that states that the peaking factor surveillances must be done after the excore detectors have been calibrated to show zero tilt (i.e., Required Action A.6). The intent of this Note is to have the peaking factor surveillances performed at operating power levels, which can only be accomplished after the excore detectors are calibrated to show zero tilt and the core returned to power.

B.1

If Required Actions A.1 through A.7 are not completed within their associated Completion Times, the unit must be brought to a MODE or condition in which the requirements do not apply. To achieve this status, THERMAL POWER must be reduced to ≤ 50% RTP within 4 hours. The allowed Completion Time of 4 hours is reasonable, based on operating experience regarding the amount of time required to reach the reduced power level without challenging plant systems.

SURVEILLANCE REQUIREMENTS

SR 3.2.4.1

SR 3.2.4.1 is modified by two Notes. Note 1 allows QPTR to be calculated with three power range channels if THERMAL POWER is < 75% RTP and the input from one Power Range Neutron Flux channel is inoperable. Note 2 allows performance of SR 3.2.4.2 in lieu of SR 3.2.4.1 if more than one input from Power Range Neutron Flux channels are inoperable.

This Surveillance verifies that the QPTR, as indicated by the Nuclear Instrumentation System (NIS) excore channels, is within its limits. The Frequency of 7 days when the QPTR alarm is OPERABLE is acceptable because of the low probability that this alarm can remain inoperable without detection.

BASES

SURVEILLANCE REQUIREMENTS (continued)

When the QPTR alarm is inoperable, the Frequency is increased to 12 hours. This Frequency is adequate to detect any relatively slow changes in QPTR, because for those causes of QPT that occur quickly (e.g., a dropped rod), there typically are other indications of abnormality that prompt a verification of core power tilt.

SR 3.2.4.2

This Surveillance is modified by a Note, which states that it is required only when the input from one or more Power Range Neutron Flux channels are inoperable and the THERMAL POWER is ≥ 75% RTP.

With an NIS power range channel inoperable, tilt monitoring for a portion of the reactor core becomes degraded. Large tilts are likely detected with the remaining channels, but the capability for detection of small power tilts in some quadrants is decreased. Performing SR 3.2.4.2 at a Frequency of 12 hours provides an accurate alternative means for ensuring that any tilt remains within its limits.

For purposes of monitoring the QPTR when one power range channel is inoperable, the moveable incore detectors are used to confirm that the normalized symmetric power distribution is consistent with the indicated QPTR and any previous data indicating a tilt. The incore detector monitoring is performed with a full incore flux map or two sets of four thimble locations with quarter core symmetry. The two sets of four symmetric thimbles is a set of eight unique detector locations. These locations are C-8, E-5, E-11, H-3, H-13, L-5, L-11, and N-8.

The symmetric thimble flux map can be used to generate symmetric thimble "tilt." This can be compared to a reference symmetric thimble tilt, from the most recent full core flux map, to generate an incore tilt. Therefore, incore tilt can be used to confirm that QPTR is within limits.

With one or more NIS channel inputs to QPTR inoperable, the indicated tilt may be changed from the value indicated with all four channels OPERABLE. To confirm that no change in tilt has actually occurred, which might cause the QPTR limit to be exceeded, the incore result may be compared against previous flux maps either using the symmetric thimbles as described above or a complete flux map. Nominally, quadrant tilt from the Surveillance should be within 2% of the tilt shown by the most recent flux map data.

SYS041 2.4.11 - Steam Dump System (SDS)/Turbine Bypass Control
YS041 GENERIC
Knowledge of abnormal condition procedures. (CFR: 41.10 / 43.5 / 45.13)

Given the following conditions on Unit 1:

- The unit is operating at 10^{-8} AMPS taking critical data
- One condenser steam dump fails open
- Crew is performing AP-01 (Steam Leak)
- Pressurizer level is stable
- NC system temperature is 553°F and decreasing slowly

1. Based on the conditions above, to isolate the steam leak AP-01 will direct the crew to _____.

2. Isolating the steam leak is one of the design basis considerations for ensuring _____ per Tech Spec 3.4.2, RCS Minimum Temperature for Criticality Basis.

Which ONE (1) of the following completes the statements above?

A. 1. trip the Reactor and close the MSIVs
   2. the reactor remains subcritical in the event of a reactor trip

B. 1. take "A" and "B" "STEAM DUMP INTLK BYP" switches to "OFF/RESET"
   2. the reactor remains subcritical in the event of a reactor trip

C. 1. trip the Reactor and close the MSIVs
   2. proper indication and response of the excore detectors

D. 1. take "A" and "B" "STEAM DUMP INTLK BYP" switches to "OFF/RESET"
   2. proper indication and response of the excore detectors

General Discussion

In the scenario given, a main condenser steam dump has failed open during a start up with the unit in Mode 2 holding power at 10-8 amps. The crew has implemented AP-01 for a steam leak. Step 13 of AP-01 directs the crew to "Check condenser dump valves CLOSED" This would not be true so the RNO for this step directs the operators to select "OFF RESET" on Steam Dump Intk Bypass Channel A and B.

One of the major concerns of the CRS in this situation would be maintaining RCS temperature above the minimum temperature for criticality. The question solicits this basis which includes the consideration that excore NI would be adversely affected and if temperature were allowed to fall below this value, proper indication and required protective actions provided would not be assured.

Answer A Discussion

INCORRECT: See explanation above.

PLAUSIBLE: Part 1 is plausible because this would be the correct action if pressurizer level was decreasing (with maximum charging flow) or if NC system temperature was less than 551°F and decreasing.

Part 2 is plausible because it would be reasonable for the applicant to confuse the basis for Minimum temp for criticality with the basis for minimum temperature stated in many of our procedures which requires additional boration to prevent return to criticality.

Answer B Discussion

INCORRECT: See explanation above.

PLAUSIBLE: Part 1 is correct and therefore plausible.

Part 2 is plausible because it would be reasonable for the applicant to confuse the basis for Minimum temp for criticality with the basis for minimum temperature stated in many of our procedures which requires additional boration to prevent return to criticality.

Answer C Discussion

INCORRECT: See explanation above.

PLAUSIBLE: Part 1 is plausible because this would be the correct action if pressurizer level was decreasing (with maximum charging flow) or if NC system temperature was less than 551°F and decreasing.

Part 2 is correct and therefore plausible.

Answer D Discussion

CORRECT: See explanation above.

Basis for meeting the KA

For this sencario, the applicant is given a malfunction of the Steam Dump System and is asked to demonstrate a knowledge of abnormal procedure actions related to operation of the steam dump controls to mitigate the consequences of the event. Therefore, the K/A is matched.

Basis for Hi Cog

This question is a higher cognitive level question because it requires the applicant to evaluate the plant conditions and determine the correct procedural actions based on the plant conditions.

Basis for SRO only

This question meets the following criteria for an SRO only question as described in the Clarification Guidance for SRO-only Questions Rev 1 dated 03/11/2010 for screening questions linked to 10CFR55.43(b)(5) (Assessment and selection of procedures):

1) The question can NOT be answered solely by knowing systems knowledge. Either of these will stop the steam leak. However, plant conditions dictate the procedural flowpath requirements which will direct the crew to take the Steam Dump INTLK BYP switch to OFF/RESET versus tripping the Reactor and closing the MSIVs.
2) The question can NOT be answered by knowing immediate operator actions. Neither of the actions described are immediate actions.
3) The question can NOT be answered solely by knowing entry conditions for AOP or direct entry conditions for EOPs. These are detailed procedure steps from AP-01.
4) The question can NOT be answered solely by knowing the purpose, overal sequence of events, or overall mitigative strategy of the procedure. This is detailed knowledge of procedure content related to knowing plant conditions that would require tripping the Reactor and closing the MSIVs as opposed to placing the steam dumps to OFF.
5) The question requires the applicant to analyze plant conditions and determine which section of the AP should be performed. Therefore, it is SRO knowledge.

Job Level	Cognitive Level	QuestionType	Question Source
SRO	Comprehension	BANK	BANK Q 491

2010 MNS SRO NRC Examination QUESTION 82

2582

D

Development References	Student References Provided
?-01 (Rev 16) page (7 of 42) TS 3.4.2 Basis	

SYS041 2.4.11 - Steam Dump System (SDS)/Turbine Bypass Control
SYS041 GENERIC
Knowledge of abnormal condition procedures. (CFR: 41.10 / 43.5 / 45.13)

401-9 Comments:	Remarks/Status
	401-9 Comments: No comment. ---------- ---------- Resolution / Comments: N/A

Question 82 References:

From AP-01:

MNS AP/1/A/5500/01 UNIT 1	STEAM LEAK	PAGE NO. 3 of 42 Rev. 16

ACTION/EXPECTED RESPONSE	RESPONSE NOT OBTAINED
C. **Operator Actions**	
__ 1. **Monitor Foldout page.**	
2. **Reduce turbine load to maintain the following:**	
__ • Excore NI's - LESS THAN OR EQUAL TO 100%	
__ • NC Loop D/T's - LESS THAN 60°F D/T	
__ • T-Avg - AT T-REF.	
__ 3. **Check containment entry - IN PROGRESS.**	__ **GO TO Step 5.**
__ 4. **Check steam leak - KNOWN TO BE OUTSIDE CONTAINMENT.**	**IF conditions warrant, THEN evacuate containment as follows:** __ a. Announce "All personnel evacuate Unit 1 containment". __ b. Actuate the containment evacuation alarm. __ c. REFER TO RP/0/A/5700/011 (Conducting a Site Assembly, Site Evacuation, or Containment Evacuation) as time allows.
__ 5. **Check Pzr pressure prior to event - GREATER THAN P-11 (1955 PSIG).**	__ **IF AT ANY TIME an S/I occurs due to steam leak, THEN GO TO Enclosure 2 (S/I Actions For Steam Break In Modes 3 and 4).**

ACTION/EXPECTED RESPONSE	RESPONSE NOT OBTAINED
__ 6. **Check Pzr level - STABLE OR GOING UP.**	Perform the following as required to maintain level: __ a. Maintain charging flow less than 200 GPM at all times in subsequent steps. __ b. Ensure 1NV-235 (Charging Line Flow Control) OPENING. __ c. OPEN 1NV-241 (U1 Seal Water Inj Flow Control) while maintaining NC pump seal flow greater than 6 GPM. __ d. Reduce or isolate letdown. __ e. Start additional NV pump. __ f. IF Pzr level going down with maximum charging flow, THEN GO TO Step 9.
__ 7. **IF AT ANY TIME while in this procedure Pzr level cannot be maintained stable, THEN RETURN TO Step 6.**	
__ 8. **GO TO Step 12.**	

Potential alternate flowpath.

ACTION/EXPECTED RESPONSE	RESPONSE NOT OBTAINED
9. Check unit status:	Perform the following:
__ • Any shutdown or control rod - WITHDRAWN	
__ • Pzr pressure prior to event - GREATER THAN P-11 (1955 PSIG).	
Potential alternate flowpath.	
	NOTE If reactor trip breakers are closed and T-Avg is less than 553°F, a feedwater isolation will occur in the next step.
	__ a. Open reactor trip breakers.
	__ b. CLOSE all MSIVs using individual valve pushbuttons.
	c. **IF** EP/1/A/5000/ES-0.1 (Reactor Trip Response) has been implemented, **THEN** perform the following:
	1) THROTTLE S/G feed flow to:
	__ • Minimize cooldown
	__ • Maintain at least one S/G N/R level greater than 11%.
	__ 2) **GO TO** Step 11.
	d. **IF** feedwater isolation has occurred **AND** S/G levels going down in uncontrolled manner, **THEN** perform the following:
	__ 1) Start CA pump(s).
	__ 2) **WHEN** desired to feed S/Gs with CM/CF, **THEN REFER TO** AP/1/A/5500/06 (S/G Feedwater Malfunction).
	e. THROTTLE S/G feed flow to:
	__ • Minimize cooldown
	__ • Maintain at least one S/G N/R level greater than 11%.
	__ f. **GO TO** Step 11.

ACTION/EXPECTED RESPONSE	RESPONSE NOT OBTAINED
10. Trip reactor and close MSIVs as follows:	
__ a. Trip reactor.	
__ b. CLOSE all MSIVs using individual valve pushbuttons.	
__ c. Continue with this AP as time allows.	
__ d. GO TO EP/1/A/5000/E-0 (Reactor Trip or Safety Injection).	
11. **IF AT ANY TIME Pzr level goes below 4% AND cannot be restored using normal charging, THEN perform the following:**	
__ a. Ensure reactor tripped.	
__ b. **WHEN** reactor tripped **OR** auto S/I setpoint reached, **THEN** ensure S/I initiated.	
__ c. Check Pzr pressure prior to event - GREATER THAN P-11 (1955 PSIG).	__ c. GO TO Enclosure 2 (S/I Actions For Steam Break In Modes 3 and 4).
__ d. GO TO EP/1/A/5000/E-0 (Reactor Trip or Safety Injection).	
__ 12. **Announce occurrence on paging system.**	

Potential alternate flowpath.

ACTION/EXPECTED RESPONSE	RESPONSE NOT OBTAINED
13. **Identify and isolate leak on Unit 1 as follows:**	
__ a. Check SM PORVs - CLOSED.	a. **IF** S/G pressure is less than 1092 PSIG, **THEN** perform the following: __ 1) CLOSE affected S/G SM PORV manual loader. 2) **IF** SM PORV is still open, **THEN** perform the following: __ a) CLOSE SM PORV isolation valve. __ b) **IF** SM PORV isolation valve still open, **THEN** dispatch operator to CLOSE SM PORV isolation valve.
__ b. Check condenser dump valves - CLOSED.	b. **IF** steam dumps required to be closed, **THEN** perform the following: 1) Select "OFF RESET" on the following switches: __ • "STEAM DUMP INTLK BYPASS CHANNEL A" __ • "STEAM DUMP INTLK BYPASS CHANNEL B". __ 2) **IF** valve will not close, **THEN** dispatch operator to CLOSE condenser dump valve isolation valve. 3) **WHEN** leaking condenser dump valve is isolated **OR** repaired, **THEN** return the following switches to "ON": __ • "STEAM DUMP INTLK BYPASS CHANNEL A" __ • "STEAM DUMP INTLK BYPASS CHANNEL B".

From TS Basis for 3.4.2 (RCS Minimum Temperature for Criticality):

B 3.4 REACTOR COOLANT SYSTEM (RCS)

B 3.4.2 RCS Minimum Temperature for Criticality

BASES

BACKGROUND

This LCO is based upon meeting several major considerations before the reactor can be made critical and while the reactor is critical.

The applicant could misinterpret this passage to imply a recriticallity concern

The first consideration is moderator temperature coefficient (MTC), LCO 3.1.3, "Moderator Temperature Coefficient (MTC)." In the transient and accident analyses, the MTC is assumed to be in a range from slightly positive to negative and the operating temperature is assumed to be within the nominal operating envelope while the reactor is critical. The LCO on minimum temperature for criticality helps ensure the plant is operated consistent with these assumptions.

is the correct answer listed in the question.

The second consideration is the protective instrumentation. Because certain protective instrumentation (e.g., excore neutron detectors) can be affected by moderator temperature, a temperature value within the nominal operating envelope is chosen to ensure proper indication and response while the reactor is critical.

The third consideration is the pressurizer operating characteristics. The transient and accident analyses assume that the pressurizer is within its normal startup and operating range (i.e., saturated conditions and steam bubble present). It is also assumed that the RCS temperature is within its normal expected range for startup and power operation. Since the density of the water, and hence the response of the pressurizer to transients, depends upon the initial temperature of the moderator, a minimum value for moderator temperature within the nominal operating envelope is chosen.

The fourth consideration is that the reactor vessel is above its minimum nil ductility reference temperature when the reactor is critical.

APPLICABLE SAFETY ANALYSES

Although the RCS minimum temperature for criticality is not itself an initial condition assumed in Design Basis Accidents (DBAs), the closely aligned temperature for hot zero power (HZP) is a process variable that is an initial condition of DBAs, such as the rod cluster control assembly (RCCA) withdrawal, RCCA ejection, and main steam line break accidents performed at zero power that either assumes the failure of, or presents a challenge to, the integrity of a fission product barrier.

APPLICABLE SAFETY ANALYSES (continued)

All low power safety analyses assume initial RCS loop temperatures ≥ the HZP temperature of 557°F (Ref. 1). The minimum temperature for criticality limitation provides a small band, 6°F, for critical operation below HZP. This band allows critical operation below HZP during plant startup and does not adversely affect any safety analyses since the MTC is not significantly affected by the small temperature difference between HZP and the minimum temperature for criticality.

The RCS minimum temperature for criticality satisfies Criterion 2 of 10 CFR 50.36 (Ref. 2).

LCO

Compliance with the LCO ensures that the reactor will not be made or maintained critical ($k_{eff} \geq 1.0$) at a temperature less than a small band below the HZP temperature, which is assumed in the safety analysis. Failure to meet the requirements of this LCO may produce initial conditions inconsistent with the initial conditions assumed in the safety analysis.

APPLICABILITY

In MODE 1 and MODE 2 with $k_{eff} \geq 1.0$, LCO 3.4.2 is applicable since the reactor can only be critical ($k_{eff} \geq 1.0$) in these MODES.

The special test exception of LCO 3.1.8, "PHYSICS TESTS Exceptions," permits PHYSICS TESTS to be performed at ≤ 5% RTP with RCS loop average temperatures slightly lower than normally allowed so that fundamental nuclear characteristics of the core can be verified. In order for nuclear characteristics to be accurately measured, it may be necessary to operate outside the normal restrictions of this LCO. For example, to measure the MTC at beginning of cycle, it is necessary to allow RCS loop average temperatures to fall below $T_{no\ load}$, which may cause RCS loop average temperatures to fall below the temperature limit of this LCO.

Parent Question (Bank Question 491):

Initial conditions:

- Unit 1 is operating at 10-8 amps taking critical data
- One atmospheric steam dump fails opens
- Crew is performing AP-01 (Steam Leak)

What action is taken per AP-01 to attempt to close the dump valve, and what design bases consideration (per Tech Spec 3.4.2, RCS Minimum Temperature for Criticality) is assured if this action is successful?

A. Take "A" and "B" "STEAM DUMP INTLK BYP" switches to "OFF/RESET"
Steam generators are above their nil ductility reference temperature.

B. Dispatch operator to close the atmospheric dump valve isolation locally.
MTC will be in the range of slightly positive to negative.

C. Take "A" and "B" "STEAM DUMP INTLK BYP" switches to "OFF/RESET"
The pressurizer is within its normal startup and operating range.

D. Dispatch operator to close the atmospheric dump valve isolation locally.
Proper indication and response of the excore detectors when the reactor is critical.

ANSWER: C

SYS002 A2.02 - Reactor Coolant System (RCS)

bility to (a) predict the impacts of the following malfunctions or operations on the RCS; and (b) based on those predictions, use procedures to correct, control, or mitigate the consequences of those malfunctions or operations: (CFR: 41.5 / 43.5 / 45.3 / 45.5)

Loss of coolant pressure .....

Given the following conditions on Unit 1:

- The unit is initially in MODE 3 with SD Banks withdrawn and NC System at full temperature and pressure
- 1NC-32B (PZR PORV) fails open
- AP-11 (Pressurizer Pressure Anomalies) has been implemented
- The PORV isolation valve for 1NC-32B will not close
- An RO is directed to trip the Reactor and initiate Safety Injection
- When attempted, both Reactor Trip breakers will not open

In accordance with AP-11, the crew shall wait until the Reactor is tripped __(1)__.

The crew will subsequently transition to __(2)__.

Which ONE (1) of the following completes the statements above?

A. 1. AND then initiate SI, even if the low pressure SI setpoint is exceeded
   2. AP-34 (Shutdown LOCA)

B. 1. AND then initiate SI, even if the low pressure SI setpoint is exceeded
   2. E-0 (Reactor Trip or Safety Injection)

C. 1. OR the low pressure SI setpoint is reached to initiate SI
   2. AP-34 (Shutdown LOCA)

D. 1. OR the low pressure SI setpoint is reached to initiate SI
   2. E-0 (Reactor Trip or Safety Injection)

General Discussion

In the scenario given with this question, the NCS has experienced a loss of pressure complicated by an ATWS (Failure of the RTB's to open from the C/R) Normally when approaching a ESF setpoint in a uncontrolled manor, the crew is expected to initiate the action prior to reaching the associated setpoint. In the case of an ATWS, the early initiation of SI would result in a FWI which could result in an extreme challenge to reactor safety (ATWS loss of Feedwater). In accordance with AP-11 Step 5 RNO, the crew should wait until the Reactor is tripped OR the SI setpoint is reached to ensure that SI is initiated.
The unit is in Mode 3 and the CLAs are not isolated so the correct transition is to go to E-0 (Reactor Trip or Safety Injection). If the unit was in Mode 3 with the CLAs isolated, the correct transition would be to AP-34 (Shutdown LOCA).

Answer A Discussion

INCORRECT: See explanation above.

PLAUSIBLE: Part 1 is plausible because initiating SI prior to the Reactor being tripped creates a worst case scenario ATWS event (i.e. ATWS with loss of feedwater). Therefore, it is reasonable for the applicant to conclude that SI should not be initiated until after the Reactor is tripped regardless of whether the SI setpoint is reached.

Part 2 is plausible because the unit is in Mode 3 and the appropriate transition would be to go to AP-34 if the CLAs were isolated.

Answer B Discussion

INCORRECT: See explanation above.

PLAUSIBLE: Part 1 is plausible because initiating SI prior to the Reactor being tripped creates a worst case scenario ATWS event (i.e. ATWS with loss of feedwater). Therefore, it is reasonable for the applicant to conclude that SI should not be initiated until after the Reactor is tripped regardless of whether the SI setpoint is reached.

Part 2 is correct and therefore plausible.

Answer C Discussion

INCORRECT: See explanation above.

PLAUSIBLE: Part 1 is correct and therefore plausible.

Part 2 is plausible because the unit is in Mode 3 and the appropriate transition would be to go to AP-34 if the CLAs were isolated.

Answer D Discussion

CORRECT: See explanation above.

Basis for meeting the KA

The KA is matched because a loss of coolant pressure is occurring and the applicant must predict the impact of plant conditions on the procedural actions required to mitigate the event. The "predicting the impact part" of the KA is met because the applicant must determine how the procedural steps are different from the normal procedural flowpath based on a change in conditions (i.e. failure of the Reactor Trip breakers to open). The loss of pressure is responsible for the need to initiate SI.

Basis for Hi Cog

This is a higher cognitive level question because it requires more than one mental step. The applicant must first analyze the given conditions and determine that the unit is in a Mode 3 condition where the CLAs could not be isolated. The applicant must then recall from memory that the correct transition in Mode 3 with the CLAs NOT isolated would be to go to E-0 (Reactor Trip or Safety Injection) as opposed to AP-34 (Shutdown LOCA). The applicant must also evaluate the impact of a ATWS complicated by a loss of NCS pressure resulting in the need to initiate SI. This represents an analysis of the situation to determine that the "normal" expectations of a crew which approaching an ESF setpoint in an uncontrolled manor would not apply in the situation.

Basis for SRO only

This question meets the following criteria for an SRO only question as described in the Clarification Guidance for SRO-only Questions Rev 1 dated 03/11/2010 for screening questions linked to 10CFR55.43(b)(5) (Assessment and selection of procedures):

1) This question can NOT be answered by knowing systems knowledge alone. This is strict procedure knowledge. This is not covered during systems training or discussed in a systems lesson plan.
2) This question can NOT be answered by knowing immediate operator actions. The immediate actions from AP-11 address attempting to isolate the stuck open Pressurizer PORV. However, the actions to be taken by the crew as pressure continues to decrease are not part of the immediate actions.
3) This question can NOT be answered by knowing the entry conditions for AOPs. The steps to be taken by the crew are not based on the entry conditions provided.
4) This question can NOT be answered by knowing the purpose, overall sequence of events, or overall mitigative strategy of the AOPs. The question is based on knowledge of specific procedure content.
5) The question requires the applicant to have in-depth knowledge of specific steps wtihin AP-11. Specifically, it requires the applicant to recall that the Step 5 RNO directs initiating SI only after the Reactor is tripped or the SI setpoint is reached. Additionally, the applicant must recall that

the same step directs transition to E-0 if the unit is in Mode 3 or above with the CLAs not isolated. Therefore, this is SRO level knowledge.

Job Level	Cognitive Level	QuestionType	Question Source
SRO	Comprehension	NEW	

Development References

Learning Objectives:
1) N/A

References:
1) AP-11, Pressurizer Pressure Anomalies

Student References Provided

SYS002 A2.02 - Reactor Coolant System (RCS)
Ability to (a) predict the impacts of the following malfunctions or operations on the RCS; and (b) based on those predictions, use procedures to correct, control, or mitigate the consequences of those malfunctions or operations: (CFR: 41.5 / 43.5 / 45.3 / 45.5)
Loss of coolant pressure .....

401-9 Comments:

Remarks/Status

401-9 Comments:

Put "The crew shall wait until the reactor is tripped" in the stem and start each choice with "AND" / "OR" as indicated. It will read much better.

Resolution / Comments:

Revised question but in order to make this work as suggested had to make this two separate fill-in-the-blank questions. See attached file for proposed revision.

Question 83 References:

From AP-11 (Pressurizer Pressure Anomalies):

MNS AP/1/A/5500/11 UNIT 1	PRESSURIZER PRESSURE ANOMALIES	PAGE NO. 2 of 9 Rev. 10

ACTION/EXPECTED RESPONSE	RESPONSE NOT OBTAINED

B. Symptoms

- Pzr pressure channel failed
- Pzr pressure going down in an uncontrolled manner
- Pzr pressure going up in an uncontrolled manner
- Any Pzr PORV or spray valve failed open
- "PZR PORV DISCH HI TEMP" alarm
- "PRT HI TEMP" alarm.

C. Operator Actions

__ 1. Check actual Pzr pressure - HAS GONE DOWN.	__ GO TO Step 17.
__ 2. Check all Pzr pressure channels - INDICATING THE SAME.	__ IF either controlling channel is malfunctioning, THEN place "PZR PRESS CNTRL SELECT" switch to backup channel.
__ 3. Check Pzr PORVs - CLOSED.	Perform the following: __ a. Close PORVs. __ b. IF PORV will not close, THEN close PORV isolation valve.
__ 4. Check Pzr spray valves - CLOSED.	Perform the following: __ a. Close Pzr spray valve(s). __ b. IF AT ANY TIME a reactor trip occurs AND spray valve still open, THEN stop 1A and 1B NC pumps.

ACTION/EXPECTED RESPONSE	RESPONSE NOT OBTAINED
__ 5. **Check Pzr PORVs - CLOSED.**	**Perform the following:** a. **IF** associated PORV isolation valve will not close **AND** pressure going down rapidly, **THEN**: 1) **IF** in Mode 3 or above, prior to CLA isolation, **THEN**: __ a) Trip reactor. __ b) **WHEN** reactor tripped **OR** auto S/I setpoint reached, **THEN** ensure S/I initiated. __ c) **GO TO** EP/1/A/5000/E-0 (Reactor Trip or Safety Injection). __ 2) **IF** in Mode 3 after CLA isolation or in Mode 4, **THEN GO TO** AP/1/A/5500/34 (Shutdown LOCA). b. Close associated PORV inlet drain valve as follows: __ • **IF** 1NC-32B (PZR PORV) failed, **THEN** close 1NC-271 (PZR PORV Drn Isol For 1NC-32B). __ • **IF** 1NC-34A (PZR PORV) failed, **THEN** close 1NC-270 (PZR PORV Drn Isol For 1NC-34A). __ • **IF** 1NC-36B (PZR PORV) failed, **THEN** close 1NC-269 (PZR PORV Drn Isol For 1NC-36B).

Distracter Plausibility

2010 MNS SRO NRC Examination QUESTION 84

2584

B

APE015/017 AA2.02 - Reactor Coolant Pump (RCP) Malfunctions

Ability to determine and interpret the following as they apply to the Reactor Coolant Pump Malfunctions (Loss of RC Flow): (CFR 43.5 / 45.13)

Abnormalities in RCP air vent flow paths and/or oil cooling system . . . . .

Given the following conditions on Unit 1:

- The unit is operating at 100% RTP
- 1C NCP Oil Reservoir Level alarm is received on the OAC
- Oil level indication on the OAC is -2.0 inches
- 1C NC pump motor bearing temperature is 200°F
- AP-08 (Malfunction of NC Pump) Case II (NC Pump Motor or Motor Bearing Malfunction) has been implemented

Which ONE (1) of the following describes the ACTIONS to be directed by the CRS in accordance with AP-08 and the HIGHEST POWER allowed at which the NCP can be stopped?

A. Trip the Reactor, verify reactor power less than 10%, then stop the 1C NCP.

B. Trip the Reactor, verify reactor power less than 5%, then stop the 1C NCP.

C. Reduce reactor power to < 10% using AP-04 (Rapid Downpower), then stop the 1C NCP.

D. Reduce reactor power to < 5% using AP-04 (Rapid Downpower), then stop the 1C NCP.

General Discussion

In accordance with AP-08, if an NC pump must be stopped reactor must be tripped if the unit is operating in Mode 1 or 2 and the NC can not be stopped until power is less than 5%.

If the NC pump trip criteria has not yet been exceeded but it is determined that the NCP still needs to be stopped, AP-08 directs performing a unit shutdown in accordance with OP/1/A/6100/003 (Controlling Procedure for Unit Operation) or AP-04 (Rapid Downpower). The NCP is then stopped after all rods are inserted and the Reactor Trip breakers are open.

Answer A Discussion

INCORRECT. See explanation above.

PLAUSIBLE: This answer is plausible because tripping the Reactor first is the correct action. Stopping the NCP when power is less than 10% is plausible since the NC low flow trips are defeated when less than 10% power (P-10). It is also plausible for the applicant to believe that the reactor would be at greater than 5% after a trip since initial decay heat load immediately after a trip is approximately 7%.

Answer B Discussion

CORRECT. See explanation above.

Answer C Discussion

INCORRECT. See explanation above.

PLAUSIBLE: This answer is plausible because stopping the NCP when power is less than 10% is reasonable since the NC low flow trips are defeated when less than 10% power (P-10).

Answer D Discussion

INCORRECT. See explanation above.

PLAUSIBLE: This answer is plausible because the NC pump is stopped when power is less than 5%. However, the reactor is tripped instead of performing a Rapid Downpower.

Basis for meeting the KA

The KA is matched because an malfunction of the oil cooling system has occurred and the applicant must determine the appropriate AP-08 actions based on plant conditions.

Basis for Hi Cog

This is a higher cognitive level question because it requires more than one mental step. The applicant must first analyze the given plant conditions and determine that the 1C NCP must be stopped immediately. The applicant must then recall from memory the AP-08 actions required for stopping the NCP.

Basis for SRO only

This question meets the following criteria for an SRO only question as described in the Clarification Guidance for SRO-only Questions Rev 1 dated 03/11/2010 for screening questions linked to 10CFR55.43(b)(5) (Assessment and selection of procedures):

1) The question can NOT be answered by knowing systems knowledge. This is detail procedure content from AP-08.
2) The question can NOT be answered by knowing immediate Operator actions. None of the actions in the correct answer or in the distracters are immediate actions.
3) The question can NOT be answered by knowing entry conditions for the AP.
4) The question can NOT be answered by knowing the purpose, overall sequence of events, or overall mitigative strategy of AP-08.
5) The question require the applicant to assess plant conditions and determine appropriate actions based on detailed knowledge of procedure content. Specifically, the applicant must determine that the NC pump needs to be stopped immediately which requires the Reactor to be tripped first and power verified less than 5% before the NCP can be stopped. Therefore, this is SRO level knowledge.

Job Level	Cognitive Level	QuestionType	Question Source
SRO	Memory	NEW	

Development References

Learning Objectives:
N/A

References:
1) AP-08, Malfunction of NC Pump

Student References Provided

2010 MNS SRO NRC Examination QUESTION 84

2584

B

APE015/017 AA2.02 - Reactor Coolant Pump (RCP) Malfunctions

ability to determine and interpret the following as they apply to the Reactor Coolant Pump Malfunctions (Loss of RC Flow): (CFR 43.5 / 45.13)

Abnormalities in RCP air vent flow paths and/or oil cooling system . . . . .

401-9 Comments:

Remarks/Status
401-9 Comments: No highest power level is listed in distractor 'C', therefore C is NP. If there is no ATWS, why would power be 10%? Distractor 'A' is NP. Nothing in the reference supports 10%. The Q is U because of 2 NP distractors. ---------- ---------- Resolution / Comments: Revised two of the distracters to eliminate potential NP distracters. See attached document for proposed fix.

Question 84 References:

From AP-08:

MNS AP/1/A/5500/08 UNIT 1	MALFUNCTION OF NC PUMP Case II NC Pump Motor or Motor Bearing Malfunction	PAGE NO. 14 of 24 Rev. 12

ACTION/EXPECTED RESPONSE	RESPONSE NOT OBTAINED
B. Symptoms • **NC pump stator winding temperature going up** • **NC pump motor bearing temperatures going up** • **NC pump upper/lower oil reservoir level computer alarm.**	
C. Operator Actions	
__ 1. **Check abnormal NC pump parameter - KNOWN TO BE VALID.**	__ **GO TO Enclosure 1 (Validation of NC Pump Parameters).**
2. **Check NC pump parameters within operating limits:**	__ **IF trip criteria valid, THEN GO TO Step 5.**
__ • All NC pump stator winding temperatures - LESS THAN 311°F	
__ • All NC pump motor bearing temperatures - LESS THAN 195°F	
__ • All NC pump oil reservoir level computer points - INDICATING BETWEEN (-)1.25 AND (+)1.25.	
__ 3. **IF AT ANY TIME any operating limit in Step 2 exceeded, THEN GO TO Step 5.**	
__ 4. **GO TO Step 6.**	

ACTION/EXPECTED RESPONSE	RESPONSE NOT OBTAINED
5. **Stop affected NC pump as follows:**	
a. **IF** A or B NC pump is the affected pump, **THEN** CLOSE associated spray valve:	
__ • 1NC-27C (A NC Loop PZR Spray Control)	
__ • 1NC-29C (B NC Loop PZR Spray Control).	
__ b. Check unit status - IN MODE 1 OR 2.	b. Perform the following:
	__ 1) Stop the affected pump.
	2) **IF** all NC pumps are off, **THEN** perform the following:
	__ a) Secure any boron dilution in progress.
	__ b) **IF** in Mode 3, **THEN** immediately open Reactor Trip Breakers.
	__ c) **IF** the step above results in rods dropping **AND** Pzr pressure is above P-11, **THEN GO TO** EP/1/A/5000/E-0 (Reactor Trip or Safety Injection).
	__ 3) **GO TO** Step 6.
__ c. Trip reactor.	
__ d. **WHEN** reactor power less than 5%, **THEN** stop affected NC pump.	
__ e. **GO TO** EP/1/A/5000/E-0 (Reactor Trip or Safety Injection).	
__ 6. **Announce occurrence on paging system.**	

ACTION/EXPECTED RESPONSE	RESPONSE NOT OBTAINED
10. Monitor the following NC pump parameters: __ • Stator winding temperatures (OAC) - STABLE OR GOING DOWN __ • Motor bearing temperatures (OAC) - STABLE OR GOING DOWN __ • Vibration - NORMAL __ • Oil reservoir levels (OAC) - STABLE.	**Perform the following:** __ a. Evaluate need to stop affected NC pump based on rate of change of abnormal NC pump parameter(s). b. IF NC pump needs to be stopped, THEN perform the following: 1) Begin unit shutdown to Mode 3 PER one of the following: __ • OP/1/A/6100/003 (Controlling Procedure For Unit Operation), Enclosure 4.2 (Power Reduction) OR __ • AP/1/A/5500/04 (Rapid Downpower). 2) **WHEN** in Mode 3, 4, or 5, **THEN** perform the following: a) **IF all** NC pumps need to be stopped, **THEN** perform the following: __ (1) Secure boron dilution. __ (2) Do not continue until rods inserted and reactor trip breakers open. b) **IF** A or B NC pump is the affected pump, **THEN** CLOSE associated spray valve: __ • 1NC-27C (A NC Loop PZR Spray Control) __ • 1NC-29C (B NC Loop PZR Spray Control). __ c) Stop affected NC pump.
__ 11. **Check NC pumps - ANY RUNNING.**	__ **IF both ND pumps off AND no EP in effect, THEN REFER TO AP/1/A/5500/09 (Natural Circulation) as time allows.**

Distracter Plausibility

END

C

2010 MNS SRO NRC Examination QUESTION 85

2585

APE022 2.4.46 - Loss of Reactor Coolant Makeup
\PE022 GENERIC
Ability to verify that the alarms are consistent with the plant conditions. (CFR: 41.10 / 43.5 / 45.3 / 45.12)

Unit 1 is operating at 100% RTP when the following alarms are received:

- 1AD-7 / J1 (NC PUMP SEAL INJ LO FLOW)
- 1AD-7 / I2 (REGEN HX LETDN HI TEMP)
- 1AD-7 / G2 (CHARGING LINE ABNORMAL FLOW)

The crew has implemented AP-12 (Loss of Letdown, Charging, or Seal Injection).

1. Based on plant conditions indicated by the alarms above, what actions are directed by AP-12?

2. What actions are directed by AP-12 regarding the restoration of letdown during the subsequent recovery?

A.
1. FIRST close the Letdown Orifice Isolations (1NV-458A, 457A, 35A) and then close 1NV-1A, 2A (NC L/D Isol To Regen Hx).
2. Pressurize the letdown system locally.

B.
1. Close 1NV-1A, 2A (NC L/D Isol To Regen Hx) and ensure that the Letdown Orifice Isolations (1NV-458A, 457A, 35A) auto-close.
2. Pressurize the letdown system locally.

C.
1. FIRST close the Letdown Orifice Isolations (1NV-458A, 457A, 35A) and then close 1NV-1A, 2A (NC L/D Isol To Regen Hx).
2. Pressurize the letdown system from the Control Room.

D.
1. Close 1NV-1A, 2A (NC L/D Isol To Regen Hx) and ensure that the Letdown Orifice Isolations (1NV-458A, 457A, 35A) auto-close.
2. Pressurize the letdown system from the Control Room.

General Discussion

In accordance with AP-12, Loss of Letdown, Charging, or Seal Injection, the crew should first close the Letdown Orifice Isolations since they have indications that charging has been lost. Then because the Regen Hx Letdown Hi Temp alarm is in, they should close the isolations to the Regen Hx (NV-1A, 2A).

During subsequent recovery actions, the crew is procedurally directed to pressurize the letdown system from the control room since the Letdown Orifice Isolations were closed prior to NV-1A and 2A. Had NV-1A and 2A closed first, the crew would be required to pressurized the letdown system locally during restoration.

Answer A Discussion

INCORRECT: See explanation above.

PLAUSIBLE: Part 1 is correct.

Part 2 is plausible if the applicant does not recall that the letdown line is pressurized locally when the Letdown Orfice Isolation Valves (1NV-458A, 457A, & 35A) close prior to 1NV-1A & 2A.

Answer B Discussion

INCORRECT: See explanation above.

PLAUSIBLE: Part 1 is plausible if the applicant just remembers the step for closing 1NV-1A and 2A which states:

"IF AT ANY TIME, "REGEN HX LTDN HI TEMP" alarm (1AD7-I2) is LIT, THEN close the following valves:
1NV-1A
1NV-2A

Procedurally the Letdown Orfice Isolations should have already been closed because the alarms in combination provide positive indication that a loss of charging has occurred and the steps to close the orifice isolations come before the steps to close NV-1A and 2A in the RNO column.

If the applicant concludes that closing the Letdown Orifice Isolations first is the correct response then the Letdown Line would have to be pressurized locally in accordance with AP-12 making Part 2 correct.

Answer C Discussion

CORRECT: See explanation above.

Answer D Discussion

INCORRECT: See explanation above.

PLAUSIBLE: Part 1 is plausible if the applicant just remembers the step for closing 1NV-1A and 2A which states:

"IF AT ANY TIME, "REGEN HX LTDN HI TEMP" alarm (1AD7-I2) is LIT, THEN close the following valves:
1NV-1A
1NV-2A

Procedurally the Letdown Orfice Isolations should have already been closed because the alarms in combination provide positive indication that a loss of charging has occurred and the steps to close the orifice isolations come before the steps to close NV-1A and 2A in the RNO column.

Part 2 is plausible if the applicant does not recall that the letdown line is pressurized locally when the Letdown Orfice Isolation Valves (1NV-458A, 457A, & 35A) close prior to 1NV-1A & 2A.

Basis for meeting the KA

The applicant must analyze the combination of alarms given in the stem of the question to determine the condition of the plant (i.e. in this case that a loss of charging has occurred). The applicant demonstrates that they have correctly identified plant conditions by selecting the correct actions from AP-12 for that plant condition. If the applicant choses the correct procedure actions based on their conclusions regarding plant conditions, they have demonstrated the ability to verify that the alarms are consitent with plant conditions. Therefore, the KA is matched.

Basis for Hi Cog

This is a higher cognitive level question because it requires more than one mental step. The applicant must first diagnose the conditions given to determine what has caused the alarms. The applicant must then recall from memory the procedure requirements for isolating letdown and the requirements for recovering letdown.

Basis for SRO only

This question meets the following criteria for an SRO only question as described in the Clarification Guidance for SRO-only Questions Rev 1 dated 03/11/2010 for screening questions linked to 10CFR55.43(b)(5) (Assessment and selection of procedures):

1) This question can NOT be answered by knowing systems knowledge alone. This requires tha applicant to analyze a given set of alarms and determine what plant conditions could have caused that combination of alarms. The applicant must then determine what procedural actions from

AP-12 are appropriate for plant conditions.
) This question can NOT be answered by knowing immediate operator actions. AP-12 has no immediate actions.
) This question can NOT be answered by knowing the entry conditions for AOPs. The alarms given are entry conditions for AP-12 However, the applicant is given that AP-12 has been entered and determine what actions from the procedure are appropriate based on the combination of alarms.
4) This question can NOT be answered by knowing the purpose, overall sequence of events, or overall mitigative strategy of the AOPs.
5) This question DOES require the applicant to assess plant conditions (based on a combination of alarms) and determine from that assessment the appropriate steps from AP-12 to be taken. This requires the applicant to have detailed knowledge of specific procedure steps from AP-12.

Job Level	Cognitive Level	QuestionType	Question Source
SRO	Comprehension	NEW	

Development References

Learning Objectives:
1) AP12002

References:
1) AP-12, Loss of Letdown, Charging, or Seal Injection

Student References Provided

APE022 2.4.46 - Loss of Reactor Coolant Makeup
APE022 GENERIC
Ability to verify that the alarms are consistent with the plant conditions. (CFR: 41.10 / 43.5 / 45.3 / 45.12)

401-9 Comments:

Remarks/Status

401-9 Comments:

2 in the stem can be deleted. This Q is asked in stem #1. Or you can state in #2: "What are the restorative actions." As written, the stem seems a bit convoluted.
Change B1 and D1 to "ensure letdown orifice isolation valves 1NV XXX auto close". The way it currently reads can be construed as teaching even though it is not true.

Resolution / Comments:

Revised question as suggested by Lead Examiner. See attached document for proposed fix.

Question 85 References:

From AP-12 (Loss of Letdown, Charging, or Seal Injection):

MNS AP/1/A/5500/12 UNIT 1	LOSS OF LETDOWN, CHARGING OR SEAL INJECTION	PAGE NO. 3 of 43 Rev. 22

C. Operator Actions

1. Check if charging is aligned to Regenerative Hx as follows:

   ☐ Charging flow - GREATER THAN 20 GPM

   __ ☐ 1NV-241 (U1 Seal Water Inj Flow Control) - THROTTLED OPEN

   __ ☐ 1NV-244A (Charging Line Cont Outside Isol) - OPEN

   __ ☐ 1NV-245B (Charging Line Cont Outside Isol) - OPEN.

While the applicant is not given these specific indications, they should be able to determine from the combination of alarms that charging flow has been lost.

IF loss of charging through Regenerative Hx has occurred, THEN perform the following:

a. Ensure the the following valves are CLOSED:

   __ ☐ 1NV-458A (75 GPM L/D Orifice Outlet Cont Isol)

   __ ☐ 1NV-457A (45 GPM L/D Orifice Outlet Cont Isol)

   __ ☐ 1NV-35A (Variable L/D Orifice Outlet Cont Isol).

__ b. IF 1NV-2A (NC L/D Isol To Regen Hx) is closed, THEN GO TO Step 2.

c. IF AT ANY TIME "REGEN HX LETDN HI TEMP" alarm (1AD-7, I-2) is lit, THEN CLOSE the following valves:

   __ ☐ 1NV-1A (NC L/D Isol To Regen Hx)

   __ ☐ 1NV-2A (NC L/D Isol To Regen Hx).

Letdown Recovery Actions from AP-12:

MNS AP/1/A/E500/12 UNIT 1	LOSS OF LETDOWN, CHARGING OR SEAL INJECTION	PAGE NO. 20 of 43 Rev. 22

42. **Check the following valves - OPEN:**	**Perform the following:**
__ ☐ 1NV-1A (NC L/D Isol To Regen Hx)	__ a. IF normal letdown known to be unavailable, THEN GO TO Step 49.
__ ☐ 1NV-2A (NC L/D Isol To Regen Hx).	__ b. Prior to opening 1NV-1A or 1NV-2A in subsequent step, ensure that all personnel are out of lower containment (potential water hammer event).
	__ c. Observe Caution prior to Step 44 and GO TO Step 44.

__ 43. **GO TO Step 48.**

CAUTION **Establishing normal letdown without local pressurization may cause some water hammer.**

Alternate Path

44. **Determine if conditions allow immediate restoration of normal letdown as follows:**

__ a. Check both 1NV-1A (NC L/D Isol To Regen Hx) and 1NV-2A (NC L/D Isol To Regen Hx) - OPEN WITHIN THE LAST 60 MINUTES. → a. GO TO RNO for Step 44.d.

__ b. Check orifice isolation valves - AUTO CLOSED. → b. Perform the following:

__ 1) IF orifice isolation valves were manually closed while both 1NV-1A and 1NV-2A were open, THEN GO TO Step 48.

__ 2) GO TO RNO for Step 44.d.

44. (Continued)

c. Determine exact time each NV letdown valve went closed on the OAC by performing the following:

__ 1) Enter turn on code "ARCHIVE".

__ 2) Ensure OAC automatically populates "START TIME" and STOP TIME". (previous hour).

__ 3) Enter group name "AP12".

__ 4) Click "F3 - VIEW PID".

__ c. **IF** unable to determine time of closure, **THEN GO TO RNO** for Step 44.d.

__ d. Check if orifice isolation valves reached fully closed - PRIOR TO 1NV-1A OR 1NV-2A CLOSING.

d. Perform the following:

__ 1) **IF** excess letdown is in service, **THEN** observe Caution and Note prior to Step 46 and **GO TO** Step 46.

NOTE Establishing normal letdown requires local pressurization of letdown header. Since this action takes significant time, establishing excess letdown first may be desired.

__ 2) **IF AT ANY TIME** it is desired to establish excess letdown, **THEN GO TO** Step 49.

__ 3) Observe Caution and Note prior to Step 46 and **GO TO** Step 46.

__ 45. GO TO Step 48.

CAUTION **It is preferable to locally pressurize the letdown line prior to establishing letdown flow due to possible water hammer.**

NOTE If plant conditions require immediate restoration of normal letdown, OSM may waive the requirement to locally pressurize the letdown header.

__ 46. **IF normal letdown is required prior to locally pressurizing letdown header, THEN GO TO Step 48.**

If the applicant concludes that closing the Orifice Isolation Valves first is the correct response or does not recall when the letdown line should be pressurized locally (relative to the closure of the Letdown Isolations and the Letdown Orifice Isolations) they would end up at this step

47 Locally pressurize letdown header as follows:

__ a. Contact RP to evaluate containment conditions for entry into pipechase.

__ b. IF desired, THEN place Containment Aux Carbon Filter System in operation PER OP/1/A/0450/015 (Containment Purge System), Enclosure 4.1 (Containment Aux Carbon Filter System Operation).

__ c. Dispatch operator to check letdown header pressure on local gauge INV PG6560 (Letdown Pressure) (Unit 1 reactor bldg, 725+3, pipechase, 218 degrees, on inner wall right of the ladder to C accumulator) - LESS THAN 1200 PSIG.

__ c. GO TO Step 48.

__ d. Have operator in containment OPEN INV 114 (Unit 1 Regenerative Hx Shell Side Flush & Vent Isol) (Unit 1 reactor bldg, 725+9, pipechase, 119 degrees, 2 ft from inner wall).

__ e. Do not continue until INV-114 is open.

__ f. Establish charging flow to Regenerative Hx by THROTTLING OPEN INV-241 (U1 Seal Water Inj Flow Control) until change in charging flow is indicated.

48 **Establish normal letdown as follows:**

__ a. Ensure 1NV-459 (U1 Variable L/D Orifice Outlet Flow Cntrl) is CLOSED.

__ b. Place 1NV-124 (Letdown Pressure Control) in manual between 10-20% OPEN

c. Check the following valves - OPEN:

__ ☐ 1NV-1A (NC L/D Isol To Regen Hx)

__ ☐ 1NV-2A (NC L/D Isol To Regen Hx).

__ **GO TO Step 49.**

This is the beginning of the sequence of steps to pressurize letdown from the Control Room. You end up here regardless of how long letdown was isolated provided 1NV-1A & 2A closed prior to the orifice isolation valves.

__ c. Ensure all personnel are out of lower containment prior to continuing.

CAUTION **A Pzr insurge will occur when charging flow is raised in next step. Letdown should be established without delay to limit the amount of insurge.**

d. Establish cooling to Regenerative Hx by performing the following concurrently:

__ ☐ Establish at least 35 GPM charging flow by THROTTLING OPEN 1NV-238 (Charging Line Flow Control) or raising PD pump speed.

__ ☐ THROTTLE 1NV-241 (U1 Seal Water Inj Flow Control) to establish approximately 8 GPM seal injection flow to each NC pump.

__ d. **IF** charging flow to Regenerative Hx cannot be established, **THEN GO TO** Step 49.

e. OPEN letdown line isolation valves as follows:

__ 1) OPEN 1NV-7B (Letdown Cont Outsice Isol).

2) OPEN 1NV-1A (NC L/D Isol To Regen Hx).

__ 3) OPEN 1NV-2A (NC L/D Isol To Regen Hx).

__ 4) OPEN 1NV-35A (Variable L/D Orifice Outlet Cont Isol).

__ e. **GO TO** Step 49.

B

2010 MNS SRO NRC Examination QUESTION 86

2586

APE027 AA2.10 - Pressurizer Pressure Control System (PZR PCS) Malfunction
Ability to determine and interpret the following as they apply to the Pressurizer Pressure Control Malfunctions: (CFR: 43.5 / 45.13)
PZR heater energized/de-energized condition .....

Given the following conditions on Unit 1:

- 1A, 1B and 1D Pressurizer heater group supply breakers open at 1100 on June 1 due to a lightning strike and cannot be reclosed
- A reactor startup is in progress with reactor power at 1% RTP
- Heater group 1C is available

Which ONE (1) of the following describes the required actions per Tech Spec 3.4.9, (Pressurizer)?

A. Restore PZR heater group 1A ONLY to operable status.

B. Restore PZR heater group 1A AND 1B ONLY to operable status.

C. Restore PZR heater group 1A AND 1D ONLY to operable status.

D. Restore PZR heater group 1A AND 1B OR 1A AND 1D to operable status.

General Discussion

The 1A, 1B and 1D Pressurizer heater groups have been de-energized. The remaining groups of heaters is capable of maintaining Pressure under normal conditions. However, the OPERABILITY requirement is based on two groups of heaters with a capacity of 150KW each with each group being capable of being supplied by off-site or emergency power. Since Pressurizer heater groups 1A and 1B are the only groups which can be supplied by emergency power, both groups are required to be OPERABLE in Modes 1, 2, and 3. Therefore, PZR heater group 1A and 1B must be returned to operable status. Group 1D is not required for TS operability.

Answer A Discussion

INCORRECT: See explanation above.

PLAUSIBLE: This answer is plausible if the applicant does not recall from the Tech Spec Basis which groups of heaters meet the operability requirements for Tech Specs and concludes that two groups of heaters have to be operable regardless of which groups. TS 3.4.9 requires two groups of heaters with a capacity of 150KW each with each group being capable of being supplied by off-site or emergency power. Since Pressurizer heater groups 1A and 1B are the only groups which can be supplied by emergency power, both groups are required to be OPERABLE in Modes 1, 2, and 3.

Answer B Discussion

CORRECT: See explanation above.

Answer C Discussion

INCORRECT: See explanation above.

PLAUSIBLE: This answer is plausible if the applicant does not recall from the Tech Spec Basis which groups of heaters meet the operability requirements for Tech Specs. TS 3.4.9 requires two groups of heaters with a capacity of 150KW each with each group being capable of being supplied by off-site or emergency power. If the applicant does not recall which groups are powered by emergency power supplies it is reasonable for them to conclude that the required groups are 1A and 1D. Since Pressurizer heater groups 1A and 1B are the only groups which can be supplied by emergency power, both groups are required to be OPERABLE in Modes 1, 2, and 3.

Answer D Discussion

INCORRECT: See explanation above.

PLAUSIBLE: This answer is plausible if the applicant does not recall from the Tech Spec Basis which groups of heaters meet the operability requirements for Tech Specs. TS 3.4.9 requires two groups of heaters with a capacity of 150KW each with each group being capable of being supplied by off-site or emergency power. Since Pressurizer heater groups 1A and 1B are the only groups which can be supplied by emergency power, both groups are required to be OPERABLE in Modes 1, 2, and 3. If the applicant concludes that 1D heaters can be supplied from an emergency power supply it is reasonable for the applicant to conclude that restoring either 1A and 1B OR 1A and 1D will meet TS operability.

Basis for meeting the KA

Strict knowledge of Pressurizer heater energized/de-energized conditions is RO level knowledge. However, given a condition were a group of Pressurizer heaters is de-energized and asking applicant to determine if the TS operability requirements for Pressurizer heaters are met and having them apply Tech Specs to determine an appropriate action raises the question to the SRO level while achieving a match to the "interpret" portion of the KA.

Basis for Hi Cog

This is a higher cognitive level question because it requires more than one mental step. It requires the applicant to recall from memory that the Tech Spec requirement for operable heaters only applies to those with emergency power supplies (i.e. Group 1A and 1B). The applicant must the correctly apply Tech Specs to determine the correct actions to be taken.

Basis for SRO only

This question meets the following criteria for an SRO only question as described in the "Clarification Guidance for SRO-only Questions (Rev 1 dated 03/11/2010)" under the Screening Criteria for question linked to 10CFR55.43(b)(2) (Tech Specs):

1) It can NOT be answered solely by knowing < 1 hour Tech Specs. There are no actions in TS 3.4.9 which are required to be completed in 1 hour or less.
2) It can NOT be answered solely by knowing the LCO/TRM information listed "above-the-line". This question requires the applicant to recall information from the Basis Document for TS 3.4.9 to correctly apply the specification.
3) It can NOT be answered by knowing the Tech Spec Safety Limits or their bases. All actions are associated with TS 3.4.9, Pressurizer.
4) It DOES require the applicant to apply required actions and have additional knowledge contained in the Tech Spec Basis (specifically what constitues Pressurizer heater operability) to be able to apply the specification correctly and arrive at the correct answer.

Job Level	Cognitive Level	QuestionType	Question Source
SRO	Comprehension	NEW	

2010 MNS SRO NRC Examination QUESTION 86

2586

B

Development References

Learning Objectives:
1) PS-NC#24

References:
1) Tech Spec 3.4.9, Pressurizer
2) Tech Spec 3.4.9 Basis

Student References Provided

APE027 AA2.10 - Pressurizer Pressure Control System (PZR PCS) Malfunction
Ability to determine and interpret the following as they apply to the Pressurizer Pressure Control Malfunctions: (CFR: 43.5 / 45.13)
PZR heater energized/de-energized condition .....

401-9 Comments:

Remarks/Status

401-9 Comments:

Change Stem 1st bullet to 1A and 1B
Change Choices B and D from 1D to 1B
Change correct answer to "D"
Reason: Q becomes more discriminatory.

Resolution / Comments:

Revised question as recommended by Lead Examiner. However, by changing question as requested, believe that answers C and D are both correct. See attached document for proposed fix.

Question 86 References:

From Tech Spec 3.4.9:

3.4 REACTOR COOLANT SYSTEM (RCS)

3.4.9 Pressurizer

LCO 3.4.9 The pressurizer shall be OPERABLE with:

a. Pressurizer water level ≤ 92% (1600 ft^3); and

b. Two groups of pressurizer heaters OPERABLE with the capacity of each group ≥ 150 kW.

APPLICABILITY: MODES 1, 2, and 3.

ACTIONS

CONDITION	REQUIRED ACTION	COMPLETION TIME
A. Pressurizer water level not within limit.	A.1 Be in MODE 3 with reactor trip breakers open. AND A.2 Be in MODE 4.	6 hours 12 hours
B. One required group of pressurizer heaters inoperable.	B.1 Restore required group of pressurizer heaters to OPERABLE status.	72 hours
C. Required Action and associated Completion Time of Condition B not met.	C.1 Be in MODE 3. AND C.2 Be in MODE 4.	6 hours 12 hours

From Tech Spec 3.4.9 Basis:

BASES

APPLICABLE SAFETY ANALYSES

In MODES 1, 2, and 3, the LCO requirement for pressurizer level to remain within the required range is consistent with the accident analyses. Safety analyses performed for lower MODES are not limiting. All analyses performed from a critical reactor condition assume the existence of a steam bubble and saturated conditions in the pressurizer. In making this assumption, the analyses neglect the small fraction of noncondensible gases normally present.

Safety analyses presented in the UFSAR (Ref. 1) do not take credit for pressurizer heater operation; however, an initial condition assumption of the safety analyses is that the RCS is operating at normal pressure.

The maximum pressurizer water level limit satisfies Criterion 2 of 10 CFR 50.36 (Ref. 2). Although the heaters are not specifically used in accident analysis, the need to maintain subcooling in the long term during loss of offsite power, as indicated in NUREG-0737 (Ref. 3), is the reason for providing an LCO.

LCO

The LCO requirement for the pressurizer to be OPERABLE with a water volume ≤ 1600 cubic feet, which is equivalent to 92%, ensures that a steam bubble exists. Limiting the LCO maximum operating water level preserves the steam space for pressure control. The LCO has been established to ensure the capability to establish and maintain pressure control for steady state operation and to minimize the consequences of potential overpressure transients. Requiring the presence of a steam bubble is also consistent with safety analysis analytical assumptions.

The LCO requires two groups of OPERABLE pressurizer heaters, each with a capacity ≥ 150 kW, capable of being powered from either the offsite power source or the emergency power supply. Only heater groups A and B are capable of being powered from the emergency power supply. The minimum heater capacity required is sufficient to maintain the RCS near normal operating pressure when accounting for heat losses through the pressurizer insulation. By maintaining the pressure near the operating conditions, a wide margin to subcooling can be obtained in the loops. The amount needed to maintain pressure is dependent on the heat losses.

APPLICABILITY

The need for pressure control is most pertinent when core heat can cause the greatest effect on RCS temperature, resulting in the greatest effect on pressurizer level and RCS pressure control. Thus, applicability has been designated for MODES 1 and 2. The applicability is also provided for MODE 3. The purpose is to prevent solid water RCS

2010 MNS SRO NRC Examination QUESTION 87

2587

B

EPE038 2.4.11 - Steam Generator Tube Rupture (SGTR)
EPE038 GENERIC
Knowledge of abnormal condition procedures. (CFR: 41.10 / 43.5 / 45.13)

Given the following conditions on Unit 1:

- NC system is in MODE 3
- S/G tube leakage occurs on "C" S/G
- AP-10 (NC System Leakage within the Capacity of Both NV Pumps), Case I (S/G Tube Leakage) has been implemented
- Charging flow is 240 GPM

The maximum charging flow limit specified by AP-10 is based on __(1)__.

The basis for performing a rapid cooldown to a selected target temperature is __(2)__.

Which ONE (1) of the following completes the statements above?

A. 1. preventing NV pump runout
2. to ensure that there is sufficient NC System subcooling following depressurization

B. 1. preventing Regen Hx tube vibration
2. to ensure that there is sufficient NC System subcooling following depressurization

C. 1. preventing NV pump runout
2. to ensure NC system temperature is below the saturation temperature for the ruptured SG PORV lift pressure

D. 1. preventing Regen Hx tube vibration
2. to ensure NC system temperature is below the saturation temperature for the ruptured SG PORV lift pressure

---

General Discussion

In accordance with the AP-10 Basis Document for Case 1 Step 25:

The principal goal of the AP is to minimize and eventually stop primary-to-secondary leakage. This step is designed to determine the target temperature that will establish sufficient subcooling in the NC so that the primary system will remain subcooled after NC pressure is decreased in subsequent steps to stop primary-to-secondary leakage.

Since, in order to stop this leakage, the NC pressure must be decreased to a value equal to the affected steam generator pressure, the temperature at which this cooldown is terminated is dependent upon the affected steam generator pressure. A table is constructed for various affected steam generator pressures showing the fluid temperature corresponding to 20°F subcooling at each of these pressures, including allowances for subcooling uncertainties. For consistency with the EPs, the target temperature should be based on the core exit TCs. The 20°F subcooling is provided as operating margin to accommodate fluctuations in NC temperature, perturbations in affected steam generator pressure, interpolation between listed affected steam generator pressures, and overshoot during NC depressurization. S/G pressure ranges were specified as human factors enhancement.

Answer A Discussion

INCORRECT: See explanation above.

PLAUSIBLE: Part 1 is plausible because NV flow is above the maximum charging flow allowed by AP-10. Therefore, it is reasonable for the applicant to conclude that NV pump runout is a concern.

Part 2 is correct.

Answer B Discussion

CORRECT: See explanation above.

Answer C Discussion

INCORRECT: See explanation above.

PLAUSIBLE: Part 1 is plausible because NV flow is above the maximum charging flow allowed by AP-10. Therefore, it is reasonable for the applicant to conclude that NV pump runout is a concern.

Part 2 is plausible because part of the strategy in AP-10 with regards to isolating the ruptured SG and conducting the cooldown is minimizing the possibility of lifting the SG PORV on the ruptured SG. For example, during the isolation of the ruptured SG, the basis for closing the MSIV last is to minimize the time between when the SG is bottled up and commencement of the rapid cooldown to minimize the possibility of lifting the PORV. So, it is plausible for the applicant to conclude that the target temperature is selected based on establishing conditions which will not result in the PORV lifting.

Answer D Discussion

INCORRECT: See explanation above.

PLAUSIBLE: Part 1 is correct.

Part 2 is plausible because part of the strategy in AP-10 with regards to isolating the ruptured SG and conducting the cooldown is minimizing the possibility of lifting the SG PORV on the ruptured SG. For example, during the isolation of the ruptured SG, the basis for closing the MSIV last is to minimize the time between when the SG is bottled up and commencement of the rapid cooldown to minimize the possibility of lifting the PORV. So, it is plausible for the applicant to conclude that the target temperature is selected based on establishing conditions which will not result in the PORV lifting.

Basis for meeting the KA

The K/A is matched because the applicant must have detailed knowledge of steps from the abnormal procedure for dealing with SG Tube Leaks (AP-10, NC System Leakage Within the Capacity of Both NV Pumps - Case 1, Steam Generator Tube Leakage) and knowledge of the basis for steps from the AP.

Basis for Hi Cog

Basis for SRO only

This question meets the following criteria for an SRO only question as described in the Clarification Guidance for SRO-only Questions Rev 1 dated 03/11/2010 for screening questions linked to 10CFR55.43(b)(5) (Assessment and selection of procedures):

1) The question can NOT be answered by knowing systems knowledge. This is knowledge of detailed procedure content.
2) The question can NOT be answered by knowing immediate Operator actions. There are no immediate actions in AP-10.
3) The question can NOT be answered by knowing entry conditions for the AP-10.
4) The question can NOT be answered by knowing the purpose, overall sequence of events, or overall mitigative strategy of AP-10.
5) The question requires the applicant to have knowledge of detailed procedure content from AP-10 (specifically what parameter is used to

determine the target temperature for the rapid cooldown) and the basis (from the AP-10 Background Document) for performing the cooldown. Therefore, this is SRO level knowledge.

Job Level	Cognitive Level	QuestionType	Question Source
SRO	Memory	NEW	

Development References

Learning Objective:
1) N/A

References:
1) AP-10 (NC System Leakage Within the Capacity of Both NV Pumps) Case I (Steam Generator Tube Leakage)

Student References Provided

EPE038 2.4.11 - Steam Generator Tube Rupture (SGTR)
EPE038 GENERIC
Knowledge of abnormal condition procedures. (CFR: 41.10 / 43.5 / 45.13)

401-9 Comments:

Remarks/Status

Proposed revision for 2010 NRC Q87.

Revision approved RFA 07/08/10.

Question 87 References:

From AP-10 Background Document Basis for Step 1:

STEP DESCRIPTION FOR Case I, Steam Generator Tube Leakage

CASE I STEP 1:

PURPOSE:

Restore NC System inventory as required and provide criteria to manually initiate SI.

DISCUSSION:

When the operator enters this guideline, he does not necessarily know the size of the tube leak that is in progress nor can he expect the size of the leak to remain constant. Leak sizes that will result in entry into this guideline will range from a few gallons per day to in excess of 100 gallons per minute. The initial plant conditions will range from full power operation to a plant shutdown. In all cases it is important that the operator maintain control of pressurizer level as an indication of reactor coolant system inventory and the capability of the charging system to makeup for the steam generator tube leak.

It is preferable to use this AP rather than SI if charging can keep up with the leak. The analysis for AP/10 shows that the integrated leakage using the strategy of this guideline would be less than if SI was actuated and the EP's were entered. Therefore, charging flow should be maximized as much as possible to prevent the loss of Pzr level and the requirement to SI. For that reason, the second charging pump should be started to maximize charging flow if physically possible without damaging other plant equipment (i.e., Regen HX).

Charging is increased and letdown is reduced as necessary to maintain Pzr level. A maximum flowrate of 232 GPM charging is allowable. This will ensure there is not excessive Regen HX tube vibration. Note this is assuming 32 GPM going to the seals, which will limit the flow through the Regen HX to 200 GPM during **transient/accident** operation (PIP M-03-05739). The control board gauge for "Charging Flow" reads from 0 -200 GPM. In order to maintain charging flow on scale, the step provides guidance to maintain charging flow less than 200 GPM. This is well below the maximum allowable flowrate of 232 GPM. It should be noted here that the maximum flowrate allowed through the Regen HX during Normal/Start Up/Shut Down operation is 155 GPM.

If this AP is used during a shutdown mode after isolating CLAs, initiating an SI signal is not appropriate during a S/G tube leak or rupture. The emergency procedures assume CLAs are aligned open or ensure they are open. In a shutdown event, opening the CLAs would cause the Pzr to rapidly fill and make it difficult to control Pzr pressure. Initiating S/I will also rapidly refill the Pzr with initial conditions of low NC pressure. In a shutdown mode after CLAs are isolated, the optimum means to stop S/G tube leakage is to stay in this AP. If Pzr level or NC subcooling is lost, manually aligning S/I flow would be appropriate. This is consistent with guidance provided in AP/34 for shutdown LOCA. Since McGuire decided to allow use of AP/10 in any mode, this guidance was required. Note that in lower modes, normal charging is likely to be adequate to maintain Pzr level, since the NC system will already be partially depressurized. An enclosure was provided to address aligning SI flow during shutdown modes (after CLAs are

From AP-10 Background Document Basis for Step 25:

CASE I STEP 25:

PURPOSE:

Determine the target temperature that will establish sufficient subcooling in the NC so that the primary system will remain subcooled after pressure is decreased to stop primary-to-secondary leakage

DISCUSSION:

The principal goal of the AP is to minimize and eventually stop primary-to-secondary leakage. This step is designed to determine the target temperature that will establish sufficient subcooling in the NC so that the primary system will remain subcooled after NC pressure is decreased in subsequent steps to stop primary-to-secondary leakage.

Since, in order to stop this leakage, the NC pressure must be decreased to a value equal to the affected steam generator pressure, the temperature at which this cooldown is terminated is dependent upon the affected steam generator pressure. A table is constructed for various affected steam generator pressures showing the fluid temperature corresponding to 20°F subcooling at each of these pressures, including allowances for subcooling uncertainties. For consistency with the EPs, the target temperature should be based on the core exit TCs. The 20°F subcooling is provided as operating margin to accommodate fluctuations in NC temperature, perturbations in affected steam generator pressure, interpolation between listed affected steam generator pressures, and overshoot during NC depressurization. S/G pressure ranges were specified as human factors enhancement.

The table has a low end target temperature related S/G pressure "LESS THAN 300 PSIG". This makes it clear what to do if affected S/G pressure is less than this value. This was done to ensure the step is clear for lower temperatures in mode 3 and in mode 4. Note that if plant is already in mode 4, further cooldown will not be performed in the body of the AP. NC depressurization will be performed to minimize primary to secondary D/P. Final cooldown and depressurization will then be performed in the post-SGTL cooldown enclosure. These enclosures address other shutdown requirements such as selecting LTOP on Pzr PORVs and aligning ND to RHR.
As previously demonstrated, the pressure of the intact steam generators must be maintained less than the pressure of the affected steam generators in order to maintain NC subcooling. Since flow from the affected steam generator should be isolated, this pressure differential is established by dumping steam only from the intact steam generators in subsequent steps.

It is not intended for the operator to reevaluate the required (target) core exit temperature or precisely interpolate between values listed in the table. When the required core exit temperature is reached, the intact S/G pressure should be controlled to maintain that temperature. Don't reevaluate target temperature if affected S/G pressure decays.

CASE I STEP 26, 27, 28, & 29:

APE058 AA2.02 - Loss of DC Power

bility to determine and interpret the following as they apply to the Loss of DC Power: (CFR: 43.5 / 45.13)

25V dc bus voltage, low/critical low, alarm .....

. Given the following conditions on Unit 1:

- The unit was operating at 100% RTP when a total loss of onsite and offsite power occurred

1. In accordance with AP-15 (Loss of Vital or Aux Control Power), what is the MINIMUM voltage on the DC Vital busses which requires the Vital Batteries (EVCA, EVCB, EVCC, EVCD) to be removed from service?

2. After power is restored and the battery chargers are placed in service, in accordance with Tech Spec 3.8.4 (DC Sources – Operating), what is the MINIMUM voltage required for the Vital Batteries to be OPERABLE while on float charge?

A. 1. 110 volts
   2. 125 volts

B. 1. 105 volts
   2. 125 volts

C. 1. 110 volts
   2. 110 volts

D. 1. 105 volts
   2. 110 volts

General Discussion

In accordance with Tech Spec 3.8.4 Basis (DC Sources Operating):

"The minimum battery terminal voltage limit is greater than or equal to 125 V while on float charge as discussed in the UFSAR, Chapter 8 (Ref. 4). "

In accordance with AP-15 (Loss of Vital or Aux Control Power) the Battery EVCA Switch must be opened if Bus EVDA voltage decreases to 105 volts.

Answer A Discussion

INCORRECT: See explanation above.

PLAUSIBLE: Part 1 is plausible because because if the battery discharged to less than 110 volts surveillance SR 3.8.6.2 must be performed to verify that battery cell paramters are within limits.

Part 2 is correct.

Answer B Discussion

CORRECT: See explanation above.

Answer C Discussion

INCORRECT: See explanation above.

PLAUSIBLE: Both parts are plausible because if the battery discharged to less than 110 volts surveillance SR 3.8.6.2 must be performed to verify that battery cell paramters are within limits.

Answer D Discussion

INCORRECT: See explanation above.

PLAUSIBLE: Part 1 is correct.

Part 2 is plausible because if the battery discharged to less than 110 volts surveillance SR 3.8.6.2 must be performed to verify that battery cell paramters are within limits.

Basis for meeting the KA

The KA is matched because the applicant must be familiar with the minimum ("low/critical low") voltage at which the vital battery must be separated from the vital battery bus.

Basis for Hi Cog

Basis for SRO only

This question meets the following criteria for an SRO only question as described in the "Clarification Guidance for SRO-only Questions (Rev 1 dated 03/11/2010)" under the Screening Criteria for question linked to 10CFR55.43(b)(5) (Assessment and Selection of Procedures) and 10CFR55.43(b)(2) (Tech Specs):

Part 1:

1) The question can NOT be answered by knowing systems knowledge. The minumum voltage on the bus before the battery has to be removed from service is only addressed in AP-15. This voltage is NOT covered by the systems lesson plan or taught during systems training. Therefore, it is not systems knowledge.
2) The question can NOT be answered by knowing immediate Operator actions. There are no immediate actions associated with AP-15.
3) The question can NOT be answered by knowing entry conditions for the AP. The information tested does not constitue entry conditions for AP-15.
4) The question can NOT be answered by knowing the purpose, overall sequence of events, or overall mitigative strategy of AP-15.
5) The question requires the applicant to have knowledge of specific diagnositic steps within AP-15. Specifically, if the minimum bus voltage is reached it requires the crew to transition to a section in the procedure to remove the battery from service.

Part 2:

1) It can NOT be answered solely by knowing < 1 hour Tech Specs
2) It can NOT be answered solely by knowing the LCO/TRM information listed "above-the-line"
3) It can NOT be answered by knowing the Tech Spec Safety Limits or their bases
4) It requires the applicant to have knowledge contained in the Tech Spec Basis (specifically the minimum voltage limit for battery operability) to answer the question correctly.

2010 MNS SRO NRC Examination QUESTION 88

2588

B

Job Level	Cognitive Level	QuestionType	Question Source
SRO	Memory	BANK	MNS Exam Bank Question AP15N01

Development References

Learning Objectives:
1) AP15003

References:
1) Tech Spec 3.8.4 Basis (DC Sources - Operating)
2) AP-15 (Loss of Vital or Aux Control Power)

Student References Provided

APE058 AA2.02 - Loss of DC Power
Ability to determine and interpret the following as they apply to the Loss of DC Power: (CFR: 43.5 / 45.13)
125V dc bus voltage, low/critical low, alarm .....

401-9 Comments:

Remarks/Status

401-9 Comments:

No comment.

Resolution / Comments:

N/A

Question 88 References:

From Tech Spec 3.8.4 Basis:

BASES

BACKGROUND (continued)

Each battery (EVCA, EVCB, EVCC, EVCD) has adequate storage capacity to carry the required duty cycle for one hour after the loss of the battery charger output. In addition, the battery is capable of supplying power for the operation of anticipated momentary loads during the one hour period.

Each 125 VDC battery is separately housed in a ventilated room apart from its charger and distribution centers. Each channel is located in an area separated physically and electrically from the other channel to ensure that a single failure in one subsystem does not cause a failure in a redundant subsystem. There is no sharing between redundant Class 1E subsystems, such as batteries, battery chargers, or distribution panels.

The batteries for the channels of DC are sized to produce required capacity at 80% of nameplate rating, corresponding to warranted capacity at end of life cycles and the 100% design demand. Battery size is based on 125% of required capacity and, after selection of an available commercial battery, results in a battery capacity in excess of 150% of required capacity. The individual cell voltage limit is 2.13 V per cell. The minimum battery terminal voltage limit is greater than or equal to 125 V while on float charge as discussed in the UFSAR, Chapter 8 (Ref. 4). The criteria for sizing large lead storage batteries are defined in IEEE-485 (Ref. 5).

Each channel of DC has ample power output capacity for the steady state operation of connected loads required during normal operation, while at the same time maintaining its battery bank fully charged. Each battery charger also has sufficient capacity to restore the battery from the design minimum charge to its fully charged state within 8 hours while supplying normal steady state loads discussed in the UFSAR, Chapter 8 (Ref. 4).

APPLICABLE SAFETY ANALYSES

The initial conditions of Design Basis Accident (DBA) and transient analyses in the UFSAR, Chapter 6 (Ref. 6), and in the UFSAR, Chapter 15 (Ref. 7), assume that Engineered Safety Feature (ESF) systems are OPERABLE.

The OPERABILITY of the DC sources is consistent with the initial assumptions of the accident analyses and is based upon meeting the design basis of the unit. This includes maintaining the DC sources OPERABLE during accident conditions in the event of:

From AP-15 (Loss of Vital or Aux Control Power):

ACTION/EXPECTED RESPONSE	RESPONSE NOT OBTAINED

NOTE If any distribution center voltage goes down to 105 - 107 Volts, the associated battery has met its duty cycle requirement. Further depletion of the battery may result in battery damage. Opening the associated battery breaker when this voltage is reached will completely deenergize the associated distribution center.

__ 17. **IF AT ANY TIME dispatched operator notifies Control Room that distribution center voltage reaches limit in table below, THEN GO TO indicated step to remove battery from service:**

DISTRIBUTION CENTER	VOLTAGE LIMIT	STEP
DCA	107 Volts	Step 19
DCB	107 Volts	Step 20
EVDA	105 Volts	Step 21
EVDB	105 Volts	Step 22
EVDC	105 Volts	Step 23
EVDD	105 Volts	Step 24

__ 18. **Do not continue unless directed by Step 17.**

ACTION/EXPECTED RESPONSE	RESPONSE NOT OBTAINED

21. **IF AT ANY TIME EVDA Distribution Center reaches 105 volts, THEN evaluate performing the following:**

__ a. Dispatch operator to open Distribution Center EVDA Compartment 2A (Battery EVCA Switch).

__ b. **IF AT ANY TIME** control power is needed to operate 'A' Train breakers, **THEN** contact station management to evaluate aligning battery to breaker control power circuits only.

c. Notify Unit 2 to perform the following:

__ 1) **WHEN** EVDA deenergized, **THEN REFER TO** AP/2/A/5500/15 (Loss of Vital or Aux Control Power) as time allows.

__ 2) Trip Unit 2 reactor.

__ 3) **GO TO** EP/2/A/5000/E-0 (Reactor Trip or Safety Injection).

__ d. **WHEN** EVDA deenergized, **THEN RETURN TO** Step 1 in body of procedure as time allows.

__ e. Trip Unit 1 reactor.

__ f. **GO TO** EP/1/A/5000/E-0 (Reactor Trip or Safety Injection).

22. **IF AT ANY TIME EVDB Distribution Center reaches 105 volts, THEN evaluate performing the following:**

__ a. Dispatch operator to open Distribution Center EVDB Compartment 2A (Battery EVCB Switch).

__ b. Notify Unit 2 to **GO TO** AP/2/A/5500/15 (Loss of Vital or Aux Control Power).

__ c. **RETURN TO** Step 1 in the body of the procedure.

Question 88 Parent Question:

Question 672 AP15N01 AP15N01

1 Pt

Unit one was operating at 100% power when a total loss of onsite and offsite power occurred. Given the following events and conditions:

- 1EVDA is supplying normal full power loads,
- No battery charger is available,
- Systems operate normally

Which one of the following statements correctly describes the minimum length of time that bus 1EVDA is designed to sustain loads and what action will protect the DC bus loads?

A. After 1 hour, the vital battery bus breaker will open automatically when bus voltage falls to 105 volts.

B. After 1 hour, the vital battery breaker must be manually opened when bus voltage falls to 105 volts.

C. After 4 hours, the vital battery breaker will open automatically when bus voltage falls to 107 volts.

D. After 4 hours, the vital battery breaker must be manually opened when bus voltage falls to 107 volts.

Answer 672

Answer: B

Distracter Analysis:

A. Incorrect: the vital battery breaker does not automatically open
Plausible: partially correct - the design time for sustaining loads is 1 hour

B. Correct: below this value the battery could be damaged or components will begin to fail.

C. Incorrect: the battery is expected to last for 1 hour and there is no automatic trip associated with low voltage
Plausible: the 4 hour requirement for battery performance is typical of the aux batteries - voltage limit is 107 volts.

D. Incorrect: the vital batteries are not designed to sustain loads for 4 hours
Plausible: partially correct - DC bus protection is achieved by manually opening the breaker - voltage limit is 107 volts.

APE062 2.4.47 - Loss of Nuclear Service Water
APE062 GENERIC
Ability to diagnose and recognize trends in an accurate and timely manner utilizing the appropriate control room reference material. (CFR: 41.10 / 43.5 / 45.12)

Unit 1 is operating at 100% RTP with "B" Train equipment in service when the following sequence of events occurs:

- The Low Level Intake suction has been lost due to fouling associated with the intake grating
- The crew is performing Enclosure 1 of AP-20 (Aligning B Train RN to Pond)
- 0RN-152 (Train 1B & 2B Disch to SNSWP) failed to open and all attempts to move the valve have failed
- The following SNSWP level trend is observed on the OAC:

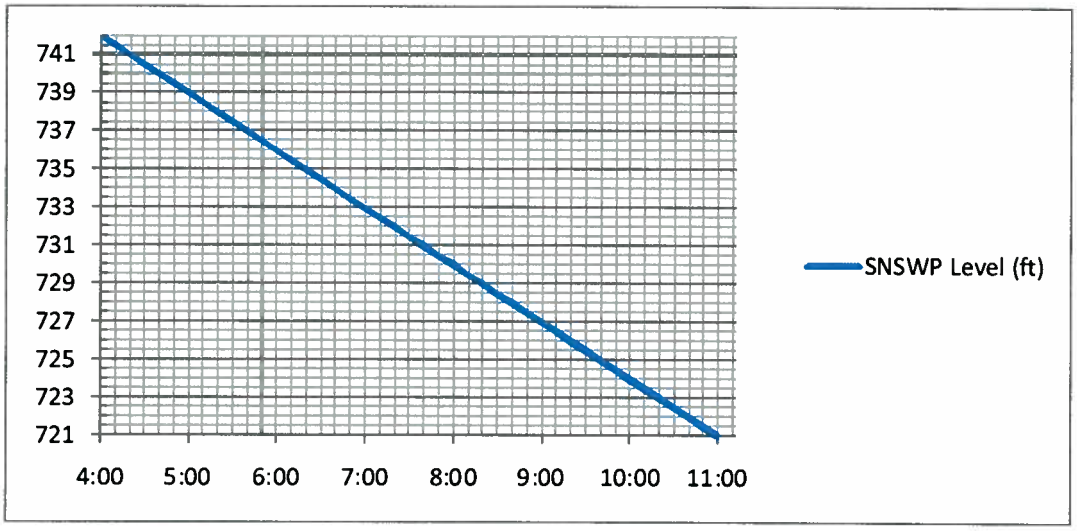

Based on these conditions, the SNSWP level becomes initially INOPERABLE at __(1)__.

The SNSWP minimum level ensures a sufficient volume of water to allow RN system operation for at least __(2)__ following a design basis LOCA.

Which ONE (1) of the following completes the statements above?

A. 1. 0450
   2. 5 Days

B. 1. 1040
   2. 5 Days

C. 1. 0450
   2. 30 Days

D. 1. 1040
   2. 30 Days

General Discussion

In the scenario the applicant is presented with a set of conditions where a loss LLI has resulted in the crew attempting to align the B Train of RN to the SNSWP. Due to the failure of a valve to move an abnormal alignment has resulted which is pumping water from the SNSWP to the lake and depleting the SNSWP inventory. Per TS 3.7.8 basis, the minimum required water level for the SNSWP is 739.5 which ensures a sufficient volume of water to allow NSWS to operate for 30 day following a design basis LOCA. With the SNSWP level trend provided in the stem, the applicant must differentiate between the TS level and the level at which SNSWP temperature is recorded (722').

Answer A Discussion

INCORRECT: See explanation above

PLAUSIBLE: Part 1 is correct and therefore plausible

Part 2 is plausible because 5 days is the time the D/G is designed to operate with the minimum fuel required available. The applicant may misinterpret this to imply that the safe shutdown loads supplied would be required to be available for the same time frame.

Answer B Discussion

INCORRECT: See explanation above

PLAUSIBLE: Part 1 is plausible if the applicant recalls that the 722 elevation is discussed in the Basis Document for TS 3.7.8 but confuses this elevation as that which is required for minimum level.

Part 2 is plausible because 5 days is the time the D/G is designed to operate with the minimum fuel required available. The applicant may misinterpret this to imply that the safe shutdown loads supplied would be required to be available for the same time frame.

Answer C Discussion

CORRECT: See explanation above.

Answer D Discussion

INCORRECT: See explanation above

LAUSIBLE: Part 1 is plausible if the applicant recalls that the 722 elevation is discussed in the Basis Document for TS 3.7.8 but confuses this elevation as that which is required for minimum level.

Part 2 is plausible because 5 days is the time the D/G is designed to operate with the minimum fuel required available. The applicant may misinterpret this to imply that the safe shutdown loads supplied would be required to be available for the same time frame.

Basis for meeting the KA

KA is matched because the candidate must evaluate the provided indications and diagnose the time at which the indicated SNSWP level is below that which is assumed in safety analysis. The "utilizing the appropriate control room reference material" in this case would be the use of the OAC level trend for SNSWP level.

Basis for Hi Cog

This is a higher cognitive level question because it requires more than one mental step. First the applicant must recall from memory the minimum level from the TS Basis assumed in the Safety Analysis. Then the applicant must analyze the SNSWP trend to determine at which time the SNSWP level decreases to less than the level recalled from memory.

Basis for SRO only

This question meets the following criteria for an SRO only question as described in the Clarification Guidance for SRO-only Questions Rev 1 dated 03/11/2010 for screening questions linked to 10CFR55.43(b)(2) (Tech Specs):

1) This question can NOT be answered by knowing less than 1 hour Tech Specs. There are no actions that are 1 hour or less associated with TS 3.7.8.
2) This question can NOT be answered by knowing information listed "above-the-line". The information solicited by the question is contained in the surveillance requirements for the spec and is therefore not "above-the-line" information.
3) This question can NOT be answered by knowing the TS Safety Limits or their bases. The information tested is from TS 3.7.8, SNSWP
4) This question requires the applicant to recall information contained in the TS basis for SNSWP 3.7.8. He must determine if the given indication meet the minimum required level assumed in safety analysis and also recall the mission time for the SNSWP to provide a water supply for the NSWS.

Job Level	Cognitive Level	QuestionType	Question Source
SRO	Comprehension	NEW	

2010 MNS SRO NRC Examination QUESTION 89

2589

C

Development References	Student References Provided
TS 3.7.8 Basis AP-20 Enclosure 1	

APE062 2.4.47 - Loss of Nuclear Service Water
APE062 GENERIC
Ability to diagnose and recognize trends in an accurate and timely manner utilizing the appropriate control room reference material. (CFR: 41.10 / 43.5 / 45.12)

401-9 Comments:	Remarks/Status
	401-9 Comments: Add the word "initially" before the word INOPERABLE. Otherwise, if the first part of B and D were correct, A and C would be correct too. The Q is a U because there are potentially 2 correct answers if the correct time was 1040 for the first part of the question. ---------- Resolution / Comments: Added the word "initially" per Lead Examiner's comment. See attached file.

Question 89 References:

From TS 3.7.8 Basis:

BASES

APPLICABLE SAFETY ANALYSES (continued)

decay heat, and worst case single active failure (e.g., single failure of a manmade structure). The SNSWP is designed in accordance with Regulatory Guide 1.27 (Ref. 2), which requires a 30 day supply of cooling water in the SNSWP.

The SNSWP satisfies Criterion 3 of 10 CFR 50.36 (Ref. 3).

LCO

This is the basis containing the correc: answer which is 30 days.

The SNSWP is required to be OPERABLE and is considered OPERABLE if it contains a sufficient volume of water at or below the maximum temperature that would allow the NSWS to operate for at least 30 days following the design basis LOCA without the loss of net positive suction head (NPSH), and without exceeding the maximum design temperature of the equipment served by the NSWS. To meet this condition, the SNSWP temperature should not exceed 82°F at 722 ft mean sea level and the level should not fall below 739.5 ft mean sea level during normal unit operation.

APPLICABILITY

In MODES 1, 2, 3, and 4, the SNSWP is required to support OPERABILITY of the equipment serviced by the SNSWP be OPERABLE in these MODES.

In MODE 5 or 6, the requirements of the SNSWP are det systems it supports.

This section contains the minimum level which is 739.5 ft. The value for the lave for the required temperature is 722 ft which provide plausibility for the applicant selecting the distracter for adequate.

ACTIONS

A.1

If the SNSWP is inoperable the unit must be placed in a MODE in which the LCO does not apply. To achieve this status, the unit must be placed in at least MODE 3 within 6 hours and in MODE 5 within 36 hours.

The allowed Completion Times are reasonable, based on operating experience, to reach the required unit conditions from full power conditions in an orderly manner and without challenging unit systems.

SURVEILLANCE REQUIREMENTS

SR 3.7.8.1

This SR verifies that adequate long term (30 day) cooling can be maintained. The specified level also ensures that sufficient NPSH is

From AP-20 Enclosure 1

NOTE Shared RN valves can be operated from either unit's control switch.

1. **Align B Train RN to SNSWP as follows:**

__ a. Notify Unit 2 Operator that B Train RN will be aligned to the SNSWP.

__ b. Check 0RN-9B (Train 1B & 2B SNSWP Supply) - OPEN.

__ c. Open 0RN-152B (Train 1B & 2B Disch to SNSWP).

__ b. **GO TO** Case II (Loss of Low Level or RC Supply Crossover).

c. Perform the following to minimize pond depletion:

1) Close the following valves:

__ • 0RN-11B (Train 1B & 2B LLI Supply)

__ • 0RN-10AC (Train 1B & 2B LLI Supply).

__ 2) Dispatch operator to open 0RN-152B (Train 1B & 2B Disch to SNSWP) (aux bldg pipe chase, 716+2' EE-64, near Unit 2 containment sump lines 15' from cad door)

__ 3) **WHEN** 0RN-152B (Train 1B & 2B Disch to SNSWP) is open, **THEN** perform Steps 1.d through 1.h

__ 4) Monitor SNSWP level as required to prevent reducing SNSWP below Tech Spec level.

(RNO continued on next page)

APE003 2.2.40 - Dropped Control Rod
APE003 GENERIC
Ability to apply Technical Specifications for a system. (CFR: 41.10 / 43.2 / 43.5 / 45.3)

Given the following conditions on Unit 1:

- Unit was at 100% RTP when rod M-4 dropped due to a blown fuse
- AP-14 (Rod Control Malfunction) has been implemented

1) In accordance with Tech Spec 3.1.4 (Rod Group Alignment Limits), if the rod can NOT be restored to within alignment limits, power must be reduced to less than or equal to _____ within 2 hours.

2) Per AP-14 power must be reduced to less than a MAXIMUM of _____ to retrieve the dropped rod.

Which ONE (1) of the following completes the statements above?

A. 1. 95% RTP
   2. 75% RTP

B. 1. 95% RTP
   2. 50% RTP

C. 1. 75% RTP
   2. 50% RTP

D. 1. 75% RTP
   2. 75% RTP

General Discussion

In accordance with Tech Spec 3.1.4 (Rod Group Alignment Limits) the misaligned rod (in this case a dropped rod) must be restored to alignment limits with 1 hour OR SDM must be verified with limits AND power reduced to less than 75% RTP within 2 hours.

In addition surviellances for Enthalpy Rise and Heat Flux Hot Channel factors must be performed within 72 hours.

In accordance with AP-14, power must be less than 50% RTP to retrieve the dropped rod. Additionally, AP-14 specifies power be reduced to less than 75% RTP within 2 hours to comply with Tech Spec 3.1.4.

Answer A Discussion

INCORRECT: See explanation above.

PLAUSIBLE: Part 1 is plausible because one of the actions required by Tech Spec 3.1.4 is to perform surveillance 3.2.2.1 for Enthalpy Rise Hot Channel factor determination. Normally this surveillance is required by Tech Spec 3.2.2 when power exceeds 95% RTP. Therefore it is plausible for the applicant to conclude that power needs to be reduced to less than this power so that the Enthalpy Rise Hot Channel factor surveillance can be performed.

Part 2 is plausible because power must be reduced to less than 75% RTP to comply with Tech Spec 3.1.4 if the rod can not be realigned within 2 hours.

Answer B Discussion

INCORRECT: See explanation above.

PLAUSIBLE: Part 1 is plausible because one of the actions required by Tech Spec 3.1.4 is to perform surveillance 3.2.2.1 for Enthalpy Rise Hot Channel factor determination. Normally this surveillance is required by Tech Spec 3.2.2 when power exceeds 95% RTP. Therefore it is plausible for the applicant to conclude that power needs to be reduced to less than this power so that the Enthalpy Rise Hot Channel factor surveillance can be performed.

Part 2 is correct.

Answer C Discussion

CORRECT: See explanation above.

Answer D Discussion

INCORRECT: See explanation above.

PLAUSIBLE: Part 1 is correct.

Part 2 is plausible because power must be reduced to less than 75% RTP within 2 hours to comply with TS 3.1.4. It is plausible for the applicant to conclude that the same restriction for reducing power due to the misaligned rod applies to realigning the rod as well.

Basis for meeting the KA

Tech Spec 3.1.4 (Rod Group Alignment Limits) is the only TS that has applicability during a dropped rod scenario. Most of the actions contained in TS 3.1.4 are one hour or less actions making them RO level knowledge. One of the few actions that is not a 1 hour or less action requires the crew to "reduce power to less than or equal to 75% RTP within 2 hrs" if the misaligned rod (dropped rod in this case) can not be restored to within limits within 1 hour. The applicant demonstrates the ability to apply Tech Spec 3.1.4 (Rod Group Alignment Limits) by recalling from memory the specific actions required to comply with the spec.

Basis for Hi Cog

Basis for SRO only

Part 1 of this question meets the following criteria for an SRO only question as described in the Clarification Guidance for SRO-only Questions Rev 1 dated 03/11/2010 for screening questions linked to 10CFR55.43(b)(2) (Tech Specs):

1) This question can NOT be answered by knowing less than 1 hour Tech Specs.
2) This question can NOT be answered by knowing information listed "above-the-line". This information is contained in the action statement section of TS 3.1.4.
3) This question can NOT be answered by knowing the TS Safety Limits or their bases. This question relates to TS 3.1.4 (Rod Group Alignment Limits)
4) This question requires the applicant to have knowledge of actions required in the application of Tech Spec 3.1.4 (specifically the power reduction required to comply with the spec)

Part 2 of this question meets the following criteria for an SRO only question as described in the Clarification Guidance for SRO-only Questions Rev 1 dated 03/11/2010 for screening questions linked to 10CFR55.43(b)(5) (Assessment and selection of procedures):

2010 MNS SRO NRC Examination QUESTION 90

2590

C

1) The question can NOT be answered solely by knowing systems knowledge. The requirements for retreiving a dropped rod are not discussed in the limits and precautions or in the systems lesson plan. Therefore, this is NOT systems knowledge.
2) The question can NOT be answered by knowing immediate operator actions. The action to reduce power to less than 50% RTP to recover the dropped rod is not an immediate action.
3) The question can NOT be answered solely by knowing entry conditions for AOP or direct entry conditions for EOPs.
4) The question can NOT be answered solely by knowing the purpose, overal sequence of events, or overall mitigative strategy of the procedure. This is detailed knowledge of procedure content.
5) The question requires the applicant to have detailed procedure step knowledge from AP-14 (specifically the power reduction required to retrieve the dropped rod). Therefore, it is SRO knowledge.

Job Level	Cognitive Level	QuestionType	Question Source
SRO	Memory	NEW	

Development References

Learning Objective:
1) AP-14 #4

References:
1) Lesson Plan OP-MC-IC-IRE

Student References Provided

APE003 2.2.40 - Dropped Control Rod
APE003 GENERIC
Ability to apply Technical Specifications for a system. (CFR: 41.10 / 43.2 / 43.5 / 45.3)

401-9 Comments:

Remarks/Status

401-9 Comments:

Due to the fact the Q is written in two parts renders distractor "D" NP. Change D1 to something other then 75.

Resolution / Comments:

Changed distracter "D" to 50% RTP as this was the only plausible answer remaining. See attached file. If this is acceptable need to revise the distracter analysis for answer 'D'.

Question 90 References:

From AP-14:

MNS AP/1/A/5500/14 UNIT 1	ROD CONTROL MALFUNCTION Enclosure 1 - Page 5 of 23 **Response To Dropped or Misaligned Rod**	PAGE NO. 9 of 37 Rev. 13

12. **Reduce reactor power below 50% prior to rod realignment as follows:**

__ a. Check only one rod - MISALIGNED.

__ a. GO TO Step 12.c.

__ b. Ensure reactor power is less than 75% within 2 hours of rod misalignment to comply with Tech Spec 3.1.4.

__ c. Reduce load as directed in subsequent steps until reactor power is less than 50% to comply with Reactor Engineering requirements.

d. Observe the following limitations during power reduction:

__ 1) Do not move rods until IAE determines rod movement is available.

__ 2) Borate as required during power reduction to maintain T-Avg at T-Ref.

__ 3) Monitor AFD during load reduction.

4) **IF AT ANY TIME** AFD reaches Tech Spec limit **AND** reactor power is greater than 50%, **THEN** perform the following:

__ a) Trip Reactor.

__ b) **GO TO** EP/1/A/5000/E-0 (Reactor Trip or Safety Injection).

e. Reduce reactor power to less than 50% **PER** one of the following procedures:

__ □ OP/1/A/6100/003 (Controlling Procedure For Unit Operation), Enclosure 4.2 (Power Reduction)

OR

__ □ AP/1/A/5500/04 (Rapid Downpower).

From TS 3.1.4 Basis:

ACTIONS (continued)

In many cases, realigning the remainder of the group to the misaligned rod may not be desirable. For example, realigning control bank B to a rod that is misaligned 15 steps from the top of the core would require a significant power reduction, since control bank D must be moved fully in and control bank C must be moved in to approximately 100 to 115 steps.

Power operation may continue with one RCCA trippable but misaligned, provided that SDM is verified within 1 hour.

The Completion Time of 1 hour represents the time necessary for determining the actual unit SDM and, if necessary, aligning and starting the necessary systems and components to initiate boration.

B.2.2, B.2.3, B.2.4, B.2.5, and B.2.6

For continued operation with a misaligned rod, RTP must be reduced, SDM must periodically be verified within limits, hot channel factors

$F_Q(X,Y,Z)$ and $F^N_{\Delta H}(X,Y)$ must be verified within limits, and the safety analyses must be re-evaluated to confirm continued operation is permissible.

Reduction of power to 75% RTP ensures that local LHR increases due to a misaligned RCCA will not cause the core design criteria to be exceeded (Ref. 7). The Completion Time of 2 hours gives the operator sufficient time to accomplish an orderly power reduction without challenging the Reactor Protection System.

When a rod is known to be misaligned, there is a potential to impact the SDM. Since the core conditions can change with time, periodic verification of SDM is required. A Frequency of 12 hours is sufficient to ensure this requirement continues to be met.

Verifying that $F_Q(X,Y,Z)$ and $F^N_{\Delta H}(X,Y)$ are within the required limits ensures that current operation at 75% RTP with a rod misaligned is not resulting in power distributions that may invalidate safety analysis assumptions at full power. The Completion Time of 72 hours allows sufficient time to obtain flux maps of the core power distribution using the incore flux mapping system and to calculate $F_Q(X,Y,Z)$ and $F^N_{\Delta H}(X,Y)$.

Once current conditions have been verified acceptable, time is available to perform evaluations of accident analysis to determine that core limits will not be exceeded during a Design Basis Event for the duration of

From TS 3.1.4:

ACTIONS (continued)

CONDITION	REQUIRED ACTION	COMPLETION TIME
B. One rod not within alignment limits.	B.1 Restore rod to within alignment limits.	1 hour
	OR	
	B.2.1.1 Verify SDM is within the limit specified in the COLR.	1 hour
	OR	
	B.2.1.2 Initiate boration to restore SDM to within limit.	1 hour
	AND	
	B.2.2 Reduce THERMAL POWER to ≤ 75% RTP.	2 hours
	AND	
	B.2.3 Verify SDM is within the limit specified in the COLR.	Once per 12 hours
	AND	
	B.2.4 Perform SR 3.2.1.1.	72 hours
	AND	
	B.2.5 Perform SR 3.2.2.1.	72 hours
	AND	
	B.2.6 Re-evaluate safety analyses and confirm results remain valid for duration of operation under these conditions.	5 days

(continued)

APE069 AA2.02 - Loss of Containment Integrity

Ability to determine and interpret the following as they apply to the Loss of Containment Integrity: (CFR: 43.5 / 45.13)

Verification of automatic and manual means of restoring integrity .....

Given the following conditions on Unit 1:

- The unit is in MODE 5 following a refueling outage
- PT/1/A/4200/002 C (Containment Closure / Integrity) is in effect
- Both trains of ND are in service
- Both ND pumps trip and cannot be restarted
- AP-19 (Loss of ND or ND System Leakage) has been implemented

Which ONE (1) of the following describes actions required by AP-19 based on the conditions above?

A. Notify the WCC SRO to dispatch Operators to isolate any open penetrations ONLY.

B. Evacuate Containment AND notify the WCC SRO to dispatch Operators to isolate any open penetrations.

C. Notify the Containment Closure Coordinator to initiate Containment closure ONLY.

D. Evacuate Containment AND notify the Containment Closure Coordinator to initiate Containment closure.

General Discussion

In accordance with AP-19, if containment closure is in effect, AP-19 will direct the Operators to evacuate containment, initiate a Site Assembly, and notify the Containment Closure Coordinator to initiate Containment closure.

Answer A Discussion

INCORRECT: See explanation above.

PLAUSIBLE: It is plausible for the applicant to conclude that since the unit is in a refueling outage the WCC SRO has control over all work on containment penetrations and has the resources to get all open penetrations isolated. Since evacuating containment has nothing to do with containment isolation per se, it is plausible to conclude that evacuating containment is not required.

Answer B Discussion

INCORRECT: See explanation above.

PLAUSIBLE: This is plausible because evacuating Containment is required. It is also plausible for the applicant to conclude that since the unit is in a refueling outage the WCC SRO has control over all work on containment penetrations and has the resources to get all open penetrations isolated.

Answer C Discussion

INCORRECT: See explanation above.

PLAUSIBLE: This is a correct action however not complete actions. Since evacuating containment has nothing to do with containment isolation per se, it is plausible to conclude that evacuating containment is not required.

Answer D Discussion

CORRECT: See explanation above.

Basis for meeting the KA

The applicant is given a changing set of conditions which constitute a loss of containment integrity (because Containment integrity was not initially required and after conditions change it is required). The applicant is required to know how containment isolation is accomplished under this condition. Therefore, the KA is matched.

Basis for Hi Cog

Basis for SRO only

This question meets the following criteria for an SRO only question as described in the Clarification Guidance for SRO-only Questions Rev 1 dated 03/11/2010 for screening questions linked to 10CFR55.43(b)(5) (Assessment and selection of procedures):

1) The question can NOT be answered by knowing systems knowledge. How containment integrity is controlled during shutdown periods is not covered by any systems lesson plan. Therefore, this is not systems level knowledge.
2) The question can NOT be answered by knowing immediate Operator actions. There are no immediate actions in AP-19.
3) The question can NOT be answered by knowing entry conditions for the AP. The actions for isolating containment in AP-19 are independent of the entry conditions.
4) The question can NOT be answered by knowing the purpose, overall sequence of events, or overall mitigative strategy of AP-19.
5) The question requires the applicant to have knowledge of detailed procedure content from AP-19 (specifically the steps requiring Containment evacuation and containment closure). Therefore, this is SRO level knowledge.

Job Level	Cognitive Level	QuestionType	Question Source
SRO	Memory	NEW	

Development References

Learning Objective:
1) AP19002

References:
1) AP-19, Loss of ND or ND System Leakage

Student References Provided

PE069 AA2.02 - Loss of Containment Integrity
Ability to determine and interpret the following as they apply to the Loss of Containment Integrity: (CFR: 43.5 / 45.13)
Verification of automatic and manual means of restoring integrity .....

QUESTION 91 2591 D

401-9 Comments:

Remarks/Status

401-9 Comments:

Is it ever possible that the WCC SRO is ever the containment closure coordinator? If so B could be a potential correct answer. FAC please confirm one way or the other.
This Q is E until confirmed.

Resolution / Comments:

The WCC SRO is never used to perform the function of the Containment Closure Coordinator. The Containment Closure Coordinator position is filled by individuals separate from the WCC SRO position.

Question 91 References:

From AP-19:

MNS AP/1/A/5500/19 UNIT 1	LOSS OF ND OR ND SYSTEM LEAKAGE	PAGE NO. 8 of 217 Rev. 22

5. **Evaluate isolating containment as follows:**

a. Check both ND pumps - OFF.

a. Perform the following:

__ 1) IF leak size greater than 10 GPM, THEN GO TO Step 5.b.

__ 2) IF leak caused trip 2 alarm on any Containment or Unit vent EMF, THEN GO TO Step 5.b.

__ 3) IF AT ANY TIME both ND pumps off, THEN perform Step 5.b through 5.f.

__ 4) IF AT ANY TIME leak size greater than 10 GPM OR leak caused trip 2 alarm on any Containment or Unit vent EMF, THEN perform Steps 5.b through 5.f.

__ 5) GO TO Step 6.

b. Announce the following on page:

__ 1) Description of event.

__ 2) "All personnel evacuate Unit 1 containment."

__ c. Actuate containment evacuation alarm.

__ d. REFER TO RP/0/A/5700/011 (Conducting a Site Assembly, Site Evacuation, or Containment Evacuation) while continuing with this procedure.

__ e. Check PT/1/A/4200/002 C (Containment Closure) - IN EFFECT.

__ e. GO TO Step 6.

__ f. Notify Containment Closure Coordinator to initiate containment closure.

APE076 2.4.11 - High Reactor Coolant Activity
PE076 GENERIC
Knowledge of abnormal condition procedures. (CFR: 41.10 / 43.5 / 45.13)

Given the following conditions on Unit 1:

- The unit is at 100% RTP
- AP-18 (High Coolant Activity) has been entered due to 1EMF-18 (Reactor Coolant Filter 1A) in Trip 2 alarm

Isotopic analysis of the NC system indicates the presence of Cobalt and Manganese which indicates that a __(1)__ event has occurred and the required action in accordance with AP-18 to reduce the activity in the NC system is to __(2)__.

Which ONE (1) of the following completes the statement above?

A. 1. failed fuel
   2. place the Cation Bed demineralizer in service

B. 1. failed fuel
   2. increase letdown flow

C. 1. crud burst
   2. place the Cation Bed demineralizer in service

D. 1. crud burst
   2. increase letdown flow

General Discussion

From the basis document for AP-18:

"Isotopes like Iodine and Cesium would indicate failed fuel, while isotopes like Cobalt and Manganese would indicate a crud burst."

For failed fuel events, one of the actions to reduce coolant activity is to place the Cation Bed Demineralizer in service. For a crud burst the appropriate action is to increase letdown flow.

Answer A Discussion

INCORRECT: See explanation above.

PLAUSIBLE: This answer is plausible if the applicant is not familiar with the isotopes that would differentiate between a crud burst and failed fuel or the required actions from AP-18 which are specific to a crud burst or failed fuel event.

Answer B Discussion

INCORRECT: See explanation above.

PLAUSIBLE: This answer is plausible if the applicant is not familiar with the isotopes that would differentiate between a crud burst and failed fuel or the required actions from AP-18 which are specific to a crud burst or failed fuel event.

Answer C Discussion

INCORRECT: See explanation above.

PLAUSIBLE: This answer is plausible if the applicant is not familiar with the isotopes that would differentiate between a crud burst and failed fuel or the required actions from AP-18 which are specific to a crud burst or failed fuel event.

Answer D Discussion

CORRECT: See explanation above.

Basis for meeting the KA

The KA is matched by Part 2 of the question in that the actions listed are from AP-18 and are different for failed fuel as opposed to a crud burst. Part 1 of the question asks for information from the Background Document for AP-18.

Basis for Hi Cog

This is a higher cognitive level question because it requires multiple mental steps. The applicant must first recall from memory (from the basis document) that the presence of Cobalt means that a crud burst has occurred. The applicant must then recall from memory the appropriate actions for a crud burst to reduce activity levels.

Basis for SRO only

This question meets the following criteria for an SRO only question as described in the Clarification Guidance for SRO-only Questions Rev 1 dated 03/11/2010 for screening questions linked to 10CFR55.43(b)(5) (Assessment and selection of procedures):

1) The question can NOT be answered by knowing systems knowledge alone.
Knowledge of the different isotopes which indicate failed fuel or a crud burst and the methods for reducing radiation levels associated with those events is not expected knowledge for ROs or SROs at MNS. Therefore, it is not systems level knowledge.
2) The question can NOT be answered by knowing immediate Operator actions. There are no immediate actions associated with AP-18.
3) The question can NOT be answered by knowing AOP or EOP entry conditions. Knowing the entry conditions for AP-18 does not allow the applicant to answer this question.
4) The question can NOT be answered by knowing the purpose, overall sequence of events, or overall mitigative strategy of the procedure.
5) The question requires the applicant to have detailed knowledge from the AP-18 Basis document (specifically that the presence of Cobalt and Manganese indicate a crud burst) and detailed procedure content knowledge (i.e. the requirement to increase letdown as opposed to placing the Cation Bed demineralizer in service). Therefore, this is SRO level knowledge.

Job Level	Cognitive Level	QuestionType	Question Source
SRO	Comprehension	NEW	

Development References

Learning Objectives:
AP18003

References:
1) AP-18
2) AP-18 Background Document

Student References Provided

APE076 2.4.11 - High Reactor Coolant Activity
E076 GENERIC
nowledge of abnormal condition procedures. (CFR: 41.10 / 43.5 / 45.13)

401-9 Comments:

Remarks/Status
401-9 Comments: Failed fuel is NP for Cobolt and Manganese. Either rewrite the stem or change distractors A and B. The Q is U because of 2 NP distractors. ---------- Resolution / Comments: Believe that there is plausibility since two validators picked failed fuel as the correct answer. Went through AP-18 and AP-18 Background document again to determine if there is another possible direction for the first part of this question. There is very little content in AP-18 and very few options for replacing the first part without testing something that is minutia with little operational validity.

Question 92 References:

From AP-18 Background Document for procedure Step 3:

STEP 3

PURPOSE:

To ensure the mixed bed demineralizer that's normally in service is not depleted and to determine if the cause of the high activity is from a crud burst or from failed fuel.

DISCUSSION:

Step 3.a checks the decontamination factor (DF) of the mixed bed demineralizer. DF is the ratio of the Influent concentration divided by the Effluent concentration. The higher the DF, the more effective the demin for removing impurities. A DF of 100 is typical of a fresh mixed bed, and a DF of 10 or less is typical of a mixed bed near depletion. If the DF were low, it would be appropriate for Chemistry to request swapping to the standby mixed bed.

Step 3.b request Chemistry to run an isotopic analysis to determine cause of high activity. Since they already have an influent sample in hand for determining DF, it can be used for this purpose. Isotopes like Iodine and Cesium would indicate failed fuel, while isotopes like Cobalt and Manganese would indicate a crud burst.

REFERENCES:

Primary Chemistry Lesson Plan OP-MC-CH-PC

STEP 4:

PURPOSE:

Reduce redeposition of crud throughout the plant.

DISCUSSION:

At the normal letdown flow rate of 75 gpm, it takes almost 21 hours to pass one entire volume of reactor coolant through the NV System. But a letdown flow of 120 gpm will circulate one entire volume of reactor coolant in approximately 12 hours (at 120 gpm letdown flow, 50% of the crud is removed every 12 hours).

REFERENCES:
Primary Chemistry Lesson Plan OP-MC-CH-PC

From AP-18:

ACTION/EXPECTED RESPONSE	RESPONSE NOT OBTAINED
B. Symptoms • **"1EMF-48 REACTOR COOLANT HI RAD" alarm** • **"1EMF-18 REACTOR COOLANT FILTER 1A" alarm** • **"1EMF-19 REACTOR COOLANT FILTER 1B" alarm** • **Chemistry sample results indicate an unexpected increase in NC System activity.**	
C. Operator Actions	
__ 1. **Place one Outside Air Pressure Filter train in service PER Enclosure 1 (Pressurizing the Control Room).**	
__ 2. **Check 1NV-127A (L/D Hx Outlet 3-Way Temp Cntrl) - ALIGNED TO DEMIN.**	__ **Align valve to "DEMIN" position.**
3. **Determine cause of high activity as follows:**	
__ a. Request Chemistry to check decontamination factor of mixed bed demineralizer.	
__ b. Notify Chemistry to perform an NC System isotopic analysis to determine if high activity is from a crud burst or failed fuel.	
__ 4. **IF AT ANY TIME it is determined that high activity is from crud burst, THEN raise letdown flow to 120 GPM PER OP/1/A/6200/001 A (Chemical and Volume Control System Letdown), Enclosure 4.5 (Establishing Maximum Normal Letdown).**	

ACTION/EXPECTED RESPONSE	RESPONSE NOT OBTAINED
5. **IF AT ANY TIME it is determined that high activity is from failed fuel, THEN perform the following:**	
__ a. Ensure mixed bed demineralizer in service.	
__ b. Notify Chemistry to consult with Reactor Group and RP to determine if the cation bed demineralizer should be placed in service.	
__ c. **IF AT ANY TIME** Chemistry requests cation bed demineralizer be placed in service, **THEN** place in service **PER** OP/1/A/6200/001D (Chemical and Volume Control System Demineralizers), Enclosure 4.3 (Removing/Returning the Cation Bed Demineralizer from/to Service).	
__ d. **REFER TO** RP/0/A/5700/000 (Classification of Emergency).	
__ e. Notify Reactor Group to discuss high activity in NC System with General Office Nuclear Engineering.	
__ 6. **Notify Radwaste to ensure VCT H_2 purge flow is established.**	
__ 7. **REFER TO Tech Spec 3.4.16 (RCS Specific Activity).**	
__ 8. **WHEN station management determines Control Room pressurization no longer required, THEN secure PER OP/0/A/6450/011 (Control Area Ventilation/Chilled Water System), Enclosure 4.4 (Control Room Atmosphere Pressurization During Abnormal Conditions).**	

END

WE03 2.4.46 - LOCA Cooldown and Depressurization
WE03 GENERIC
Ability to verify that the alarms are consistent with the plant conditions. (CFR: 41.10 / 43.5 / 45.3 / 45.12)

Given the following conditions on Unit 1:

- A Reactor Trip and Safety Injection have occurred due to a Small-Break LOCA inside Containment
- Containment pressure peaked at 2.5 PSIG
- ES-1.2 (Post LOCA Cooldown and Depressurization) has been implemented
- Both ND pumps are running
- NC system pressure is 250 PSIG and decreasing slowly

The FIRST FWST level and Containment Sump conditions that require stopping both ND pumps prior to swapping to the containment sump are FWST level __(1)__ AND both "CONT SUMP LEVEL GREATER THAN 2.5 FT" alarms are __(2)__.

Which ONE (1) of the following completes the statement above?

A. 1. 200 inches
   2. DARK

B. 1. 260 inches
   2. DARK

C. 1. 200 inches
   2. LIT

D. 1. 260 inches
   2. LIT

General Discussion

In accordance with ES-1.2, if FWST level decrease to less than 250 inches AND both "CONT SUMP LEVEL GREATER THAN 2.5 FT" alarms are DARK, and NS pumps are OFF, the ND pumps must be stopped prior to reaching 180 inches to prevent vortexing following suction transfer to the sump.

Answer A Discussion

CORRECT: See explanation above.

Answer B Discussion

INCORRECT: See explanation above.

PLAUSIBLE: The second part is correct.

First part is plausible because the level is less than the level at which FWST makeup is required.

Answer C Discussion

INCORRECT: See explanation above.

PLAUSIBLE: First part is correct.

Second part is plausible if the applicant does not understand the significance of the alarm being lit or not lit. In other words, if the applicant does not understand that there has to be sufficient inventory in the Containment Sump prior to swapover to prevent vortexing of the ND pumps, the second part is plausible. Additionally, the Containment Sump level alarms being LIT under these plant conditions is normal.

Answer D Discussion

INCORRECT: See explanation above.

PLAUSIBLE: First part is plausible because the level is less than the level at which FWST makeup is required.

Second part is plausible if the applicant does not understand the significance of the alarm being lit or not lit. In other words, if the applicant does not understand that there has to be sufficient inventory in the Containment Sump prior to swapover to prevent vortexing of the ND pumps, the second part is plausible. Additionally, the Containment Sump level alarms being LIT under these plant conditions is normal.

Basis for meeting the KA

The applicant must understand the significance of the Containment Sump level alarms relative to plant conditions to know that the ND pumps must be stopped if FWST level decreases below a minumum level and sufficient inventory does not exist in the Containment Sump at the time of swapover to prevent vortexing of the ND pumps.

Basis for Hi Cog

This is a higher cognitive level question because it requires multiple mental steps. First the applicant must analyze the data given to understand that NS pumps are not running (i.e. Containment pressure peaked at 2.5 PSIG). The applicant must then recall from memory that less than 250 inches with both CONT SUMP LEVEL GREATER THAN 2.5 FT alarms DARK requires tripping both ND pumps.

Basis for SRO only

This question meets the following criteria for an SRO only question as described in the Clarification Guidance for SRO-only Questions Rev 1 dated 03/11/2010 for screening questions linked to 10CFR55.43(b)(5) (Assessment and selection of procedures):

1) The question can NOT be answered solely by knowing systems knowledge. Securing the ND Pumps if the potential for vortexing exists upon reaching the swapover point is not addressed in the limits and precautions or in the Systems Lesson Plan. Therefore, this is not systems level knowledge.
2) The question can NOT be answered by knowing immediate operator actions. There are no immediate actions associated with ES-1.2.
3) The question can NOT be answered solely by knowing entry conditions for AOP or direct entry conditions for EOPs.
4) The question can NOT be answered solely by knowing the purpose, overal sequence of events, or overall mitigative strategy of the procedure.
5) This is detailed knowledge of a procedure diagnostic step that requires specific actions to be taken if conditions are not met. Therefore, this is SRO level knowledge.

Job Level	Cognitive Level	QuestionType	Question Source
SRO	Comprehension	NEW	

Development References

Learning Objectives:
1) EPE1004

Student References Provided

References:
E1 Background Document

WE03 2.4.46 - LOCA Cooldown and Depressurization
WE03 GENERIC
Ability to verify that the alarms are consistent with the plant conditions. (CFR: 41.10 / 43.5 / 45.3 / 45.12)

401-9 Comments:

Remarks/Status
401-9 Comments: I fail to see the connection between this Q and LOCA cooldown and depressurization. The stem bullets involve it by referencing ES-1.2, but the Q stem and choices do not. This Q is a U until FAC justifies. ---------- Resolution / Comments: In ES-1.2, the check for FWST level less than 250 inches with the Containment Sump Level Alarms DARK is a continuous action step to ensure that there is sufficent level in the sump to prevent vortexing at the suction of the ND pumps when the auto swapover level in the FWST is reached. This is an important step during Post LOCA Cooldown and Depressurization.

Question 93 References:

From ES-1.2 Background Document:

STEP 6 Check 1ETA and 1ETB - ENERGIZED BY OFFSITE POWER

PURPOSE: To ensure that the vital 4160V AC busses are energized.

BASIS: If offsite power is available, station equipment should be aligned to the offsite source. If either vital bus is **NOT** energized from its offsite source, AP/1/A/5500/07 (Loss of Electrical Power) should be referenced to ensure the automatic loading of equipment on the bus (e.g., charging pumps, MD CA pumps, KC pumps, etc.). This AP also provides actions to realign offsite power to a vital bus when the offsite source becomes available, addresses maintaining DC busses, and other issues associated with a loss of power.

STEP 7 Place all Pzr heaters in manual and off.

PURPOSE: To turn off all Pzr heaters prior to restoring Pzr level in order to minimize NC heat input.

BASIS: This action, consistent with normal cooldown procedures, prevents Pzr heat inputs from being automatically initiated. This added heat would tend to keep the NC pressurized.

NOTE: If all NC pumps are off, the upper head region may void during NC System depressurization. This will cause Pzr level to rise rapidly.

PURPOSE: To alert the operator of possible void formation in the NC during the NC depressurization.

BASIS: As the NC system is depressurized, steam may form in the hotter regions on the NC system. Pzr level will rise rapidly as water displaced from these voided regions replaces steam in the pressurizer. If voiding occurs, the Pzr may fill with water within a few minutes. This note informs the operator of this condition so that the NC system depressurization can be stopped quickly to avoid a water solid pressurizer.

STEP 8 Check if ND pumps should be stopped: (CONTINUOUS ACTION)

PURPOSE: To stop the ND pumps if NC pressure is above their shutoff head to prevent damage to the pumps.

BASIS: Upon S/I initiation all safeguard pumps are started regardless of the possibility of high NC pressure with respect to the low-head S/I pump shutoff head. On low-head systems where the pump recirculates at low flow there is concern with long term operation at low flow rates. Shutdown of the pump when the NC pressure meets the criteria outlined in this step allows for future pump operability. However, if NC pressure goes below 286 psig the pumps will have to be manually restarted since no automatic signal is available.

Additional criteria for stopping ND pumps were added to the step. For some low temperature mode 3 scenarios (described in PIP M-04-5515), the existing ERG step would leave ND pumps running with suction on FWST. For these small break LOCA

events, NS does not actuate. If FWST level reaches 250 inches and inadequate sump level is indicated, ND pumps must be secured prior to auto swapover to prevent them from vortexing. 250 inches was selected to provide many minutes for operators to respond. This step will also energize ND discharge valves and allow using them to isolate ND if single failure occurs preventing securing of ND pump. As documented in PIP M-04-5115, corrective action 11, ND operation for 10 minutes is always enough to ensure core reflood for an event initiated in Mode 3. By the time 250 inches FWST level is reached, ND operation much longer than this is assured. The TSC is requested to help monitor FWST level, since there is no alarm at 250 inches.

STEP 9 Control intact S/G levels: (CONTINUOUS ACTION)

PURPOSE: To ensure adequate feed flow or S/G inventory for secondary heat sink requirements.

BASIS: The minimum feed flow requirement satisfies the feed flow requirement of the Heat Sink Status tree until level in at least one S/G is restored into the narrow range. Narrow range level is reestablished in all S/Gs to maintain symmetric cooling of the NC. The control range ensures adequate inventory with level readings on span.

STEP 10 Initiate NC System cooldown to Cold shutdown:

PURPOSE: To begin or continue a controlled NC cooldown to cold shutdown using a preferred or alternate method with a specified maximum cooldown rate.

BASIS: The objective of a controlled cooldown is to reduce the overall temperature of the NC coolant and metal to reduce the need for supporting plant systems and equipment required for heat removal. The maximum cooldown rate of 100°F/hr will preclude violation of the Integrity Status Tree thermal shock limits. The preferred steam release path is to the condenser to conserve inventory; however, atmospheric release is the stated alternative. The ND system may have been placed in RHR mode later in the procedure, and should be used to cool down the NC to cold shutdown.

STEP 11 Check NC subcooling based on core exit T/Cs - GREATER THAN 0°F.

PURPOSE: To determine if the NC is subcooled so that subsequent actions dependent upon subcooling can be performed.

BASIS: If NC subcooling can be verified, the LOCA is most likely small and controllable, i.e., S/I flow equals or exceeds break flow. Subsequent steps that may be allowed include deliberate NC depressurization, NC pump restart, and S/I flow reduction. If subcooling is inadequate the operator is directed to increase S/I flow to restore subcooling.

2010 MNS SRO NRC Examination QUESTION 94

2594

A

GEN2.1 2.1.4 - GENERIC - Conduct of Operations

Conduct of Operations

Knowledge of individual licensed operator responsibilities related to shift staffing, such as medical requirements, "no-solo" operation, maintenance of active license status, 10CFR55, etc. (CFR: 41.10 / 43.2)

Unit 1 is operating at 100% RTP.

An active licensed STA may assume the duties of the Control Room Supervisor provided the CRS or relief SRO is available to return to the control room within (1) AND the periods during which the STA assumes SRO duties do not exceed (2) in duration.

Which ONE (1) of the following completes the statement above?

A. 1. 10 minutes
   2. 15 minutes

B. 1. 15 minutes
   2. 10 minutes

C. 1. 15 minutes
   2. 15 minutes

D. 1. 10 minutes
   2. 10 minutes

General Discussion

Technical Specifications allows the Shift Technical Advisor to assume the control room command function and perform the duties of the control room SRO in Modes 1, 2, 3, and 4 during periods when the CRSRO and the relief SRO are required to be absent from the control room. However, the following requirements must be met:

- The STA must hold an SRO license for the unit.
- The CRSRO or relief SRO must be available to return to the control room within 10 minutes.
- The periods during which the STA may perform the control room SRO duties may not exceed 15 minutes in duration or a total of 1 hour for the entire shift.

Answer A Discussion

CORRECT: See explanation above.

Answer B Discussion

INCORRECT: See explanation above.

PLAUSIBLE: This answer is plausible if the applicant confuses the time for the CRSRO or relief SRO to return to the control room with the allowable duration of the relief by the STA.

Answer C Discussion

INCORRECT: See explanation above.

PLAUSIBLE: This answer is plausible if the applicant confuses the time for the CRSRO or relief SRO to return to the control room with the allowable duration of the relief by the STA.

Answer D Discussion

INCORRECT: See explanation above.

PLAUSIBLE: This answer is plausible if the applicant confuses the time for the CRSRO or relief SRO to return to the control room with the allowable duration of the relief by the STA.

Basis for meeting the KA

KA is matched because the candidate must understand the control room manning requirements for the individual fulfilling the control room command function.

Basis for Hi Cog

Basis for SRO only

This question meets the following criteria for an SRO only question as described in the Clarification Guidance for SRO-only Questions Rev 1 dated 03/11/2010 for screening questions linked to 10CFR55.43(b)(1 & 2) (Tech Specs):

1) This question can NOT be answered by knowing less than 1 hour Tech Specs. These requirements are in 5.1.2 which has no action statements.
2) This question can NOT be answered by knowing information listed "above-the-line". These are administrative requirements. There is no "above-the-line" knowledge.
3) This question can NOT be answered by knowing the TS Safety Limits or their bases. This is TS 5.1.2. not TS Safety Limits.
4) This question requires the applicant to have knowledge of TS administrative requirements contain in Section 5 of Tech Specs. This is SRO level knowledge.

Job Level	Cognitive Level	QuestionType	Question Source
SRO	Memory	BANK	2009 MNS SRO Exam

Development References

Learning Objective:
1) OP-MC-ADM-OMP, Obj 3

References:
1) Technical Specification 5.1.2, amendment 213 and 194

Student References Provided

GEN2.1 2.1.4 - GENERIC - Conduct of Operations

Conduct of Operations

Knowledge of individual licensed operator responsibilities related to shift staffing, such as medical requirements, "no-solo" operation,

maintenance of active license status, 10CFR55, etc. (CFR: 41.10 / 43.2)

J1-9 Comments:

Remarks/Status

401-9 Comments:

For this particular question, since the times are the same for C and D, do not make this a fill in the blank. Consider writing C and D as follows:
An active licensed STA may assume the duties of the CRS provided the relief SRO is available to both return to the control room AND the periods which the STA assumes SRO duties do not exceed 10/15 minutes in duration respectively
Otherwise, C and D will be ruled out due to the way they are worded.
This Q is E until modified.

Resolution / Comments:

Reworded per Lead Examiner's suggestion. See attached file for proposed revision. As a note, two validators missed this question and BOTH picked 'C'.

Question 94 References:

From T.S. 5.1.2:

5.0 ADMINISTRATIVE CONTROLS

5.1 Responsibility

5.1.1 The Station Manager shall be responsible for overall unit operation and shall delegate in writing the succession to this responsibility during his absence.

5.1.2 The Control Room Senior Reactor Operator (CRSRO) shall be responsible for the control room command function. During any absence of the CRSRO from the control room while the unit is in MODE 1, 2, 3, or 4, an individual [other than the Shift Technical Advisor (STA)] with an active Senior Reactor Operator (SRO) license shall be designated to assume the control room command function. During any absence of the CRSRO from the control room while the unit is in MODE 5 or 6, an individual with an active SRO license or Reactor Operator license shall be designated to assume the control room command function.

On occasion when there is a need for both the CRSRO and the relief SRO to be absent from the control room in MODE 1, 2, 3, or 4, the STA shall be allowed to assume the control room command function and serve as the SRO in the control room provided that:

a. the CRSRO or the relief SRO is available to return to the control room within 10 minutes,

b. the assumption of SRO duties by the STA is limited to periods not in excess of 15 minutes duration and a total time not to exceed 1 hour during any shift, and

c. the STA has a SRO license on the unit.

Question 94 Parent Question (MNS 2009 NRC Exam):

Examination Outline Cross-reference:	Level	RO	SRO
			X
	Tier #		3
Final	Group #		
	K/A #	G2.1.5	
	Importance Rating		3.9

Conduct of operations

Ability to locate and use procedures related to shift staffing, such as minimum crew complement, overtime limitations, etc.

Proposed Question: SRO 86

1 Pt

Unit 1 is operating at 100% RTP.

Under which ONE (1) of the following conditions may an active licensed STA assume the duties of the Control Room Supervisor?

The CRS or relief SRO is available to return to the control room within ____(1) AND the periods during which the STA assumes SRO duties do not exceed ___(2) in duration.

A. (1) 15 minutes
(2) 15 minutes

B. (1) 15 minutes
(2) 10 minutes

C. (1) 10 minutes
(2) 15 minutes

D. (1) 10 minutes
(2) 10 minutes

Proposed Answer: C

Explanation (Optional):

Technical Specifications allows the Shift Technical Advisor to assume the control room command function and perform the duties of the control room SRO in Modes 1, 2, 3, and 4 during periods when the CRSRO and the relief SRO are required to be absent from the control room. However, the following requirements must be met:

- The STA must hold an SRO license for the unit.
- The CRSRO or relief SRO must be available to return to the control room within 10 minutes.
- The periods during which the STA may perform the control room SRO duties may not exceed 15 minutes in duration or a total of 1 hour for the entire shift.

A. **Incorrect:** See explanation above. **Plausible** if the candidate confuses the time for the CRSRO or relief SRO to return to the control room with the allowable duration of the relief by the STA.
B. **Incorrect:** See explanation above. **Plausible** if the candidate confuses the time for the CRSRO or relief SRO to return to the control room with the allowable duration of the relief by the STA.
C. **Correct.**
D. **Incorrect:** See explanation above. **Plausible** if the candidate confuses the time for the CRSRO or relief SRO to return to the control room with the allowable duration of the relief by the STA.

Technical Reference(s) Technical Specification 5.1.2, amendment 213 and 194 (Attach if not previously provided)

(Including version or revision #)

Proposed references to be provided to applicants during examination: None

Learning Objective: OP-MC-ADM-OMP, Obj 3 (As available)

Question Source:	Bank #		
	Modified Bank #		(Note changes or attach parent)
	New	X	
Question History:	Last NRC Exam		
Question Cognitive Level:	Memory or Fundamental Knowledge	X	
	Comprehension or Analysis		
10 CFR Part 55 Content:	55.41		
	55.43	43.5	

Comments:

Conduct of operations

Ability to locate and use procedures related to shift staffing, such as minimum crew complement, overtime limitations, etc.

KA is matched because the candidate must understand the control room manning requirements for the individual fulfilling the control room command function.

This is an SRO Only question linked to 10CFR55.43(b)(2), Tech Specs. This questions can NOT be answered by knowing less than 1 hour Tech Spec or TRM action statements. It can NOT be answered by knowing the LCO/TRM information listed "above-the-line" (since this is an Administrative Control). It can NOT be answered by knowing Tech Spec Safety Limits or their basis. The candidate must apply requirements from Section 5.0, Administrative Controls of Technical specifications. Requirements in Section 5.0 are NOT expected knowledge for ROs.

GEN2.1 2.1.8 - GENERIC - Conduct of Operations
Conduct of Operations
Ability to coordinate personnel activities outside the control room. (CFR: 41.10 / 45.5 / 45.12 / 45.13)

Given the following conditions on Unit 1:

- The unit is in a refueling outage
- Fuel movement is in progress
- A leak has developed which has caused level to drop in the spent fuel pool
- The Spent Fuel Pool Level Low computer alarm has actuated

In accordance with AP-40 (Loss of Refueling Canal Level), which ONE (1) of the following describes the FIRST action directed by the CRS to mitigate the current conditions?

A. Place the weir gate in position and inflate the seals.

B. Begin makeup to the pool from the Boric Acid Tank.

C. Move the fuel transfer cart to the reactor side and close 1KF-122 (Fuel transfer tube block valve).

D. Move the fuel transfer cart to the spent fuel (pit) side and close 1KF-122 (fuel transfer tube block valve).

General Discussion

In accordance with AP-40 the first action which will be directed by the CRS is to move the fuel transfer cart to the spent fuel pit side and close 1KF-122.

Answer A Discussion

INCORRECT: See explanation above.

PLAUSIBLE: This answer is plausible because this would be the correct answer if 1KF-122 could not be closed. However, the first attempt is to close 1KF-122.

Answer B Discussion

INCORRECT: See explanation above.

PLAUSIBLE: This answer is plausible because the Operators are directed to make upt o the spent fuel pool in AP-40. However, the first action is to attempt to isolate the spent fuel pool from the refueling canal the preserve the water that is in the spent fuel pool. Also, makeup to the spent fuel pool is not normally done from the BAT.

Answer C Discussion

INCORRECT: See explanation above.

PLAUSIBLE: This answer is plausible if the applicant does not recall which side of the transfer tube the fuel transfer cart has to be located to close the block valve (1KF-122).

Answer D Discussion

CORRECT: See explanation above.

Basis for meeting the KA

The KA is matched because the applicant must have knowledge of local operator actions outside of the control room to be able to coordinate those activities.

Basis for Hi Cog

Basis for SRO only

This question meets the following criteria for an SRO only question as described in the Clarification Guidance for SRO-only Questions Rev 1 dated 03/11/2010 for screening questions linked to 10CFR55.43(b)(5) (Assessment and selection of procedures):

1) The question can NOT be answered by knowing systems knowledge alone. This is detailed procedure content knowledge from AP-40 and AP-41.
2) The question can NOT be answered by knowing immediate Operator actions. There are no immediate operator actions associated with AP-40 or AP-41.
3) The question can NOT be answered by knowing AOP or EOP entry conditions. Knowledge of AP-40 entry conditions will not enable the applicant to correctly answer this question.
4) The question can NOT be answered by knowing the purpose, overall sequence of events, or overall mitigative strategy of AP-40 or AP-41.
5) The question requires the applicant to assess plant conditions and then prescribing a procedure or section of a procedure to mitigate the consequences of the event. Specific to this event, initial entry would be into AP-41 (Loss of SFP Cooling or Level). However, since 1KF-122 is open the operator is directed out of AP-41 and into AP-40 (Loss of Refueling Canal Level) where they are directed to perform the appropriate actions.

Job Level	Cognitive Level	QuestionType	Question Source
SRO	Memory	BANK	MNS Exam Bank Question FHFCN014

Development References

Learning Objective:
1)

References:
Lesson Plan OP-MC-FH-FC Section 3.2.2
AP-40

Student References Provided

GEN2.1 2.1.8 - GENERIC - Conduct of Operations

Conduct of Operations

Ability to coordinate personnel activities outside the control room. (CFR: 41.10 / 45.5 / 45.12 / 45.13)

01-9 Comments:

Remarks/Status
401-9 Comments: No comment. ---------- ---------- Resolution / Comments: N/A

Question 95 References:

From Lesson Plan OP-MC-FH-FC Section 3.2.2:

The Symptoms include:

- EMF36 UNIT VENT GAS HI RAD alarm
- EMF38 CONTAINMENT PART HI RAD alarm
- EMF39 CONTAINMENT GAS HI RAD alarm
- EMF40 CONTAINMENT IODINE HI RAD alarm
- EMF42 FUEL BLDG VENT HI RAD alarm
- EMF16 CONTAINMENT REFUELING BRIDGE alarm (2 - EMF3 on Unit 2)
- EMF17 SPENT FUEL BLDG REFUEL BRDG alarm (2 - EMF4 on Unit 2)
- Gas bubbles originating from the damaged assemblies
- Visible evidence of damage with the potential of radioactive releases

Operator Actions

CAUTION **Damage to the rubber Reactor Vessel Cavity Seal may occur if an assembly is dropped on or near it.**

Announce on page. If in containment, **evacuate** containment, assemble in contaminated change room and refer to RP/0/A/5700/11, Conducting a Site Assembly, Site Evacuation, or Containment Evacuation. **Isolate** containment: stop VP fans, ensure VP valves close, stop any VQ release, ensure equipment hatch closed, ensure one airlock door closed, dispatch Operator to move conveyor to Spent Fuel Pool Building, dispatch Operator to close KF-122. If high containment radiation exists, place Aux Carbon Filters in service per OP. Place Refueling Cavity in purification per OP.

If in Spent Fuel Building, **evacuate** Spent Fuel Pool area, assemble in contaminated change room. **Isolate** Spent Fuel Pool area: Check if VF EXH BYP DAMPER closed lite lit, and if not, place it's control switch to "CLOSE", and close the doors to the Spent Fuel Pool area. Ensure KF purification loop in service per OP.

Refer to RP/0/A/5700/00, Classification of Emergency.

3.2.2 AP/1/A/5500/40, LOSS OF REFUELING CANAL LEVEL

The purpose is to provide actions in the event of loss of water in the refueling canal.

The Symptoms include:

- "Spent Fuel Pool Level Low" computer alarm
- Decreasing level in refueling canal
- "Incore Inst Room Sump Hi Level" alarm
- EMF16 CONTAINMENT REFUELING BRIDGE alarm (2 - EMF3 on Unit 2)
- EMF17 SPENT FUEL BLDG REFUEL BRDG alarm (2 - EMF4 on Unit 2)

Operator Actions

NOTE Any available core location may be used when lowering a fuel assembly during emergency conditions.

If fuel movement is in progress: lower any assembly in the reactor building crane to fully down in the core, any assembly in the spent fuel crane to fully down, and any assembly in the upender to fully down. If they won't lower otherwise, manually release the brake and hand crank the hoist down. **NOTE: The sequence for lowering the hoist manually should be to put the emergency handwheel on the end of the hoist motor, hold it steady, while another person screws in the brake release (star shaped knob on a threaded stud) which when threaded in forces the brake disengaged. Care should be taken to remove the handwheel before electric operation of the hoist motor. The upender is similar. The bridge and trolly brake release is a lever, otherwise similar.** Dispatch Operator to locally move fuel transfer cart to the spent fuel (pit) side. Stop FWST Pump and close FW-13, and dispatch Operator to locally close KF-122. If KF-122 cannot be closed, then notify RP to begin surveys, consider installing the weir gate, and isolate the Spent Fuel Building (VF in filter mode and doors closed). Evacuate nonessential personnel from containment and Spent Fuel Building.

Try to identify and correct the cause of decreasing level. Verify seal integrity and air pressure to the Rx Vessel cavity seal and the Rx Vessel nozzle inspection port seals, and if not, reestablish VI to seals. Dispatch an Operator to locally ensure the Refueling Cavity Drains are closed. Check the S/G Nozzle Dams. Refer to AP/19, Loss of ND or ND System Leakage, while continuing with this procedure.

Makeup to the canal per OP/1/A/6200/13. **CAUTION:** Makeup to the SFP could dilute NC system boron concentration.

Monitor the Spent Fuel Pool level. If it gets to minus two feet, stop the KF Pump and turn off the lights. Initiated makeup per OP. If pool level low enough for radiation hazard, makeup from RN.

Ensure Containment Integrity with equipment hatch and airlock doors closed. If time permits, turn off canal underwater lights before they become uncovered. If necessary due to increasing radiation levels, consider using ND or NS to transfer water from the containment sump to the FWST for additional makeup capability.

Refer to RP/0/A/5700/00, Classification of Emergency.

From AP-40:

ACTION/EXPECTED RESPONSE	RESPONSE NOT OBTAINED

B. Symptoms

- **"SPENT FUEL POOL LEVEL LOW" computer alarm**
- **Level in refueling cavity going down**
- **"INCORE INST ROOM SUMP HI LEVEL" alarm**
- **1EMF-16 "CONTAINMENT REFUELING BRDG" alarm**
- **1EMF-17 "SPENT FUEL BUILDING BRDG" alarm.**

C. Operator Actions

__ 1. **Announce occurrence on page.**

__ 2. **Check - FUEL MOVEMENT IN PROGRESS.**

Perform the following:

__ a. IF any radioactive component is being handled in the spent fuel pool or refueling cavity, **THEN** have fuel handling crew lower component to fully down.

__ b. IF cavity level is dropping more than one inch per minute, **AND** 1FW-27A (Unit 1 FWST to ND Pumps Isol) is open, **THEN** initiate makeup **PER** Enclosure 3 (Refueling Cavity Makeup Using ND Pump) while continuing in this AP.

__ c. **GO TO** Step 4.

ACTION/EXPECTED RESPONSE	RESPONSE NOT OBTAINED
NOTE Any available core location may be used when lowering a fuel assembly during emergency conditions.	
3. **Contact fuel handling SRO to have fuel handling crew perform the following:**	
__ a. Lower any fuel assembly in the reactor building manipulator crane to fully down in the core.	__ a. Release brake and hand crank hoist down.
__ b. Lower any fuel assembly in the spent fuel manipulator crane to fully down.	__ b. Release brake and hand crank hoist down.
__ c. Lower any fuel assembly in either upender to fully down.	__ c. Release brake and hand crank upender down.
__ d. Move fuel transfer cart to the spent fuel (Pit) side.	__ d. Release brake and hand crank transfer cart to spent fuel (Pit) side.
__ e. Lower any radioactive component in the spent fuel pool or refueling cavity to fully down.	e. Perform the following: __ • Reinstall component. OR __ • Place component as far below the water as safely possible.
__ 4. **WHEN fuel transfer cart is in the spent fuel bldg, THEN dispatch 2 operators to CLOSE 1KF-122 (Unit 1 Fuel Transfer Tube Isol) (spent fuel bldg, 780, PP-51, top of fuel pool at south east corner).**	
__ 5. **Notify Containment Closure Coordinator to initiate containment closure PER PT/1/A/4200/002 C (Containment Closure).**	

Question 95 Parent Question:

FHFCN014
1 Pt(s) Given the following conditions:

- Unit 1 is in a refueling outage.
- Fuel movement is in progress.
- A leak has developed which has caused level to drop in the spent fuel pool.
- The Spent Fuel Pool Level Low computer alarm has actuated.
- Pool was initially at normal level and area radiation at 7 mrem/hr.
- After 20 minutes the pool level has decreased further and area radiation is 18 mrem/hr.

Which one (1) of the following describes the operator response to the current conditions?

A. Begin makeup to the pool from the Boric Acid Tank. to restore level.

B. Move the fuel transfer cart to the reactor side and close 1KF-122 (Fuel transfer tube block valve).

C. Move the fuel transfer cart to the spent fuel (pit) side and close 1KF-122 (fuel transfer tube block valve).

D. Place the weir gate in position and inflate the seals.

Answer 6

Answer: C

MISCINFO: SRO Only SOURCE: SRO92
REFERENCES: AP/1/A/5500/40, p. 2,3

LESSON: OP-MC-FH-FCB TASK:
p. 59, 60

OBJECTIVE: 15C TIME:
K/A: 000036G010 (3.7/3.8) DATE: SROEXAM1992

GEN2.2 2.2.40 - GENERIC - Equipment Control
quipment Control
Ability to apply Technical Specifications for a system. (CFR: 41.10 / 43.2 / 43.5 / 45.3)

Given the following conditions on Unit 1:

- Unit 1 is operating at 100% RTP

The following sequence of events occurs:

DATE	TIME	EVENT
0800	July 10	1SA-49AB (Main Steam Supply from SG 1B to TD CA Pump) declared INOPERABLE
0800	July 16	1SA-48ABC (Main Steam Supply from SG 1C to TD CA Pump) declared INOPERABLE
0100	July 17	1SA-49AB (Main Steam Supply from SG 1B to TD CA Pump) returned to OPERABLE status

In accordance with Tech Spec 3.7.5 (AFW System), 1SA-48ABC must be returned to OPERABLE status by _____ or the unit must be placed in MODE 3 within 6 hours and MODE 4 within 12 hours.

Which ONE (1) of the following completes the statement above?

REFERENCE PROVIDED

A. 0800 on July 17

B. 0800 on July 20

C. 0800 on July 23

D. 0100 on July 24

General Discussion

In accordance with TS 3.7.5 (AFW System) the original T.S. entry on July 10 at 0800 for 1SA-49AB expires on July 17 at 0800. The second steam supply from 1SA-48ABC becomes inoperable at 0800 on July 16. Since both steam supplies are inoperable concurrently, the rule for "10 days from discovery of failure to meet the LCO" applies. So, after 1SA-49AB is returned to service on July 17 at 0100, the 10 day LCO requirement from the time of the initial entry into the T.S. would require action be taken on July 20 at 0800.

Answer A Discussion

INCORRECT: See explanation above.

PLAUSIBLE: This answer is plausible if the applicant does not understand the 10 day allowance in the spec and concludes that the 7 day LCO requirement still applies from date and time of the original entry into the spec. That being the case, the applicant would determine that this is the correct answer.

Answer B Discussion

CORRECT: See explanation above.

Answer C Discussion

INCORRECT: See explanation above.

PLAUSIBLE: This answer is plausible if the applicant concludes that after 1SA-49AB is returned to service, the 7 day LCO requirement applies from the time that 1SA-48ABC became inoperable (i.e. the steam supply that is still inoperable). That being the case, the applicant would determine than action must be taken on July 23 at 0800.

Answer D Discussion

INCORRECT: See explanation above.

PLAUSIBLE: This answer is plausible if the applicant concludes that after 1SA-49AB is returned to service the LCO becomes 7 days from the time that 1SA-49AB is returned to service (1SA48ABC is still inoperable). The applicant would then conclude that action must be taken on July 24 at 0100.

Basis for meeting the KA

The KA is matched because the applicant, given a copy of Tech Spec 3.7.5, to apply the specification to given data and determince the correct LCO time.

Basis for Hi Cog

This is a higher cognitive level question because it requires multiple mental steps to arrive at the correct answer. First the applicant must recall the rules of usage for applying the 10 day "extension" from T.S. Basis. The applicant must then analyze the equimpent inoperability times to determine the correct action time.

Basis for SRO only

This question meets the following criteria for an SRO only question as described in the Clarification Guidance for SRO-only Questions Rev 1 dated 03/11/2010 for screening questions linked to 10CFR55.43(b)(2) (Tech Specs):

1) This question can NOT be answered by knowing less than 1 hour Tech Specs. The only part of T.S. 3.7.5 that requires action in less than 1 hour is if all three AFW trains are inoperable in MODES 1, 2, or 3 OR if the single AFW train required to be operable in MODE 4 is inoperable.
2) This question can NOT be answered by knowing information listed "above-the-line". This question requires the applicant to apply T.S. 3.7.5 requirements that are "below-the-line".
3) This question can NOT be answered by knowing the TS Safety Limits or their bases. This question requires the applicant to apply T.S. 3.7.5 and recall usage requirements from the T.S. Bases (NOT Safety Limit bases).
4) This question requires the applicant to apply T.S. 3.7.5 and recall usage requirements from the T.S. Bases . Therefore, it is SRO level knowledge.

Job Level	Cognitive Level	QuestionType	Question Source
SRO	Comprehension	BANK	MNS Exam Bank Question ADMTS020

Development References	Student References Provided
Tech Spec 3.7.5 Tech Spec 1.3 Completion Times	Tech Spec 3.7.5 (AFW System)

GEN2.2 2.2.40 - GENERIC - Equipment Control

Equipment Control

Ability to apply Technical Specifications for a system. (CFR: 41.10 / 43.2 / 43.5 / 45.3)

01-9 Comments:	Remarks/Status
	Proposed replacement for 2010 NRC Q-96. Replacement question approved. RFA 07/06/10

Question 96 High Miss Proposed Replacement References:

From T.S. 3.7.5:

3.7 PLANT SYSTEMS

3.7.5 Auxiliary Feedwater (AFW) System

LCO 3.7.5 Three AFW trains shall be OPERABLE.

---NOTE---
Only one AFW train, which includes a motor driven pump, is required to be OPERABLE in MODE 4.

APPLICABILITY: MODES 1, 2, and 3,
MODE 4 when steam generator is relied upon for heat removal.

ACTIONS

---NOTE---
LCO 3.0.4.b is not applicable when entering MODE 1.

CONDITION	REQUIRED ACTION	COMPLETION TIME
A. One steam supply to turbine driven AFW pump inoperable.	A.1 Restore steam supply to OPERABLE status.	7 days AND 10 days from discovery of failure to meet the LCO
B. One AFW train inoperable in MODE 1, 2 or 3 for reasons other than Condition A.	B.1 Restore AFW train to OPERABLE status.	72 hours AND 10 days from discovery of failure to meet the LCO

First Steam Supply Inoperable

From the time of the original entry into T.S

After First Steam Supply is returned to Operable

Second Steam Supply Inoperable

(continued)

From T.S. 1.3 (Completion Times):

1.0 USE AND APPLICATION

1.3 Completion Times

PURPOSE	The purpose of this section is to establish the Completion Time convention and to provide guidance for its use.
BACKGROUND	Limiting Conditions for Operation (LCOs) specify minimum requirements for ensuring safe operation of the unit. The ACTIONS associated with an LCO state Conditions that typically describe the ways in which the requirements of the LCO can fail to be met. Specified with each stated Condition are Required Action(s) and Completion Time(s).
DESCRIPTION	The Completion Time is the amount of time allowed for completing a Required Action. It is referenced to the time of discovery of a situation (e.g., inoperable equipment or variable not within limits) that requires entering an ACTIONS Condition unless otherwise specified, providing the unit is in a MODE or specified condition stated in the Applicability of the LCO. Required Actions must be completed prior to the expiration of the specified Completion Time. An ACTIONS Condition remains in effect and the Required Actions apply until the Condition no longer exists or the unit is not within the LCO Applicability. If situations are discovered that require entry into more than one Condition at a time within a single LCO (multiple Conditions), the Required Actions for each Condition must be performed within the associated Completion Time. When in multiple Conditions, separate Completion Times are tracked for each Condition starting from the time of discovery of the situation that required entry into the Condition. Once a Condition has been entered, subsequent trains, subsystems, components, or variables expressed in the Condition, discovered to be inoperable or not within limits, will not result in separate entry into the Condition, unless specifically stated. The Required Actions of the Condition continue to apply to each additional failure, with Completion Times based on initial entry into the Condition. However, when a subsequent train, subsystem, component, or variable expressed in the Condition is discovered to be inoperable or not within limits, the Completion Time(s) may be extended. To apply this

(continued)

1.3 Completion Times

DESCRIPTION (continued)

Completion Time extension, two criteria must first be met. The subsequent inoperability:

a. Must exist concurrent with the first inoperability; and

b. Must remain inoperable or not within limits after the first inoperability is resolved.

The total Completion Time allowed for completing a Required Action to address the subsequent inoperability shall be limited to the more restrictive of either:

a. The stated Completion Time, as measured from the initial entry into the Condition, plus an additional 24 hours; or

b. The stated Completion Time as measured from discovery of the subsequent inoperability.

The above Completion Time extensions do not apply to those Specifications that have exceptions that allow completely separate re-entry into the Condition (for each train, subsystem, component, or variable expressed in the Condition) and separate tracking of Completion Times based on this re-entry. These exceptions are stated in individual Specifications.

The above Completion Time extension does not apply to a Completion Time with a modified "time zero." This modified "time zero" may be expressed as a repetitive time (i.e., "once per 8 hours," where the Completion Time is referenced from a previous completion of the Required Action versus the time of Condition entry) or as a time modified by the phrase "from discovery . . ." Example 1.3-3 illustrates one use of this type of Completion Time. The 10 day Completion Time specified for Conditions A and B in Example 1.3-3 may not be extended.

(continued)

1.3 Completion Times

EXAMPLES (continued)

EXAMPLE 1.3-3

ACTIONS

CONDITION	REQUIRED ACTION	COMPLETION TIME
A. One Function X train inoperable.	A.1 Restore Function X train to OPERABLE status.	7 days AND 10 days from discovery of failure to meet the LCO
B. One Function Y train inoperable.	B.1 Restore Function Y train to OPERABLE status.	72 hours AND 10 days from discovery of failure to meet the LCO
C. One Function X train inoperable. AND One Function Y train inoperable.	C.1 Restore Function X train to OPERABLE status. OR C.2 Restore Function Y train to OPERABLE status.	72 hours 72 hours

(continued)

1.3 Completion Times

EXAMPLES

EXAMPLE 1.3-3 (continued)

When one Function X train and one Function Y train are inoperable, Condition A and Condition B are concurrently applicable. The Completion Times for Condition A and Condition B are tracked separately for each train starting from the time each train was declared inoperable and the Condition was entered. A separate Completion Time is established for Condition C and tracked from the time the second train was declared inoperable (i.e., the time the situation described in Condition C was discovered).

If Required Action C.2 is completed within the specified Completion Time, Conditions B and C are exited. If the Completion Time for Required Action A.1 has not expired, operation may continue in accordance with Condition A. The remaining Completion Time in Condition A is measured from the time the affected train was declared inoperable (i.e., initial entry into Condition A).

The Completion Times of Conditions A and B are modified by a logical connector with a separate 10 day Completion Time measured from the time it was discovered the LCO was not met. In this example, without the separate Completion Time, it would be possible to alternate between Conditions A, B, and C in such a manner that operation could continue indefinitely without ever restoring systems to meet the LCO. The separate Completion Time modified by the phrase "from discovery of failure to meet the LCO" is designed to prevent indefinite continued operation while not meeting the LCO. This Completion Time allows for an exception to the normal "time zero" for beginning the Completion Time "clock". In this instance, the Completion Time "time zero" is specified as commencing at the time the LCO was initially not met, instead of at the time the associated Condition was entered.

(continued)

Parent Question
ADMTS020
1 Pt Given the following conditions:

- Unit 1 is operating at 100% power.
- At 0800 on July 10, during surveillance testing of the Turbine-Driven CA Pump, it is discovered that 1SA0049AB, Main Steam Supply from SG 1B to TD CA Pump, will not open. The steam supply from 1B S/G is declared INOPERABLE and Tech Spec 3.7.5 (Auxiliary Feedwater System) is entered at that time.
- On July 16, a problem with 1SA0048ABC, Main Steam Supply from SG 1C to TD CA Pump, is discovered at 0800 hours (valve broken).
- At 0100 on July 17, the problem with 1SA0049AB is resolved and the Steam Supply to the Turbine-Driven CA Pump from 1B S/G is returned to OPERABLE status at that time.

Which ONE (1) of the following states actions required to comply with Technical Specifications 3.7.5 based on the conditions above?

A. Restore steam supply to OPERABLE by 0800 on July 19 or place the unit in MODE 3 in 6 hours and MODE 4 in 12 hours.

B. Restore steam supply to OPERABLE by 0800 on July 20 or place the unit in MODE 3 in 6 hours and MODE 4 in 12 hours.

C. Restore steam supply to OPERABLE by 0800 on July 23 or place the unit in MODE 3 in 6 hours and MODE 4 in 12 hours.

D. Restore steam supply to OPERABLE by 0100 on July 24 or place the unit in MODE 3 in 6 hours and MODE 4 in 12 hours.

Answer 457

B
Provide student with copy of **T.S. 3.7.5 and Basis**.

0800 7/10 ---- SA49 inop ---- enter 3.7.5 A.1 ---- 7days & 10 day completion

0800 7/16 ---- SA48 inop ---- enter 3.7.5 B.1 ---- now in 10 day requirement from A.1 (so due date is 0800 7/20)

0100 7/17 --- SA49 operable ---- still in 10 day requirement from initial entry of 3.7.5 A.1

GEN2.2 2.2.6 - GENERIC - Equipment Control
quipment Control
Knowledge of the process for making changes to procedures. (CFR: 41.10 / 43.3 / 45.13)

Given the following conditions on Unit 1:

- The unit is in MODE 5 preparing for a unit startup after refueling
- You are the Unit 1 Control Room Supervisor
- A Temporary Test procedure is being run on the 1B Boric Acid pump
- The OATC points out that several steps in the TT procedure should be concurrent verification steps to be consistent with similar steps in other test procedures

In accordance with NSD 703 (Administrative Instructions for Technical Procedures) the change to the Temporary Test Procedure shall be processed as a __(1)__ change.

For any procedure change, a 10CFR50.59 Evaluation is NOT required __(2)__.

Which ONE (1) of the following completes the statements above?

A. 1. minor
   2. for minor changes ONLY

B. 1. major
   2. for minor changes ONLY

C. 1. minor
   2. for minor changes OR if the procedure has been excluded from the 10CFR50.59 process

D. 1. major
   2. for minor changes OR if the procedure has been excluded from the 10CFR50.59 process

---

General Discussion

In accordance with NSD 703 (Administrative Instructions for Technical Procedures) Section 703.4 (Criteria For Procedure Revisions and Changes) Step 4.4.3.e. on of the examples of changes that fit the definition of a minor procedure change is "Add/delete inspection/verification signatures (e.g. QC Hold Point, Concurrent Verification). Therefore, this change is a minor procedure change.

In accordance with NSD 703 an evaluation of a procedure may be performed to exclude that procedure from the 10CFR50.59 process. If the procedure is excluded from the process it is maintained on a list of procedures which are excluded from the 10CFR50.59 process.

Answer A Discussion

INCORRECT: See explanation above.

PLAUSIBLE: Part 1 is correct.

Part 2 is plausible if the applicant does not recall that a procedure may be excluded from the 10CFR50.59 review process. The answer is partially true in that minor modifications do not require a 50.59 review.

Answer B Discussion

INCORRECT: See explanation above.

PLAUSIBLE: Part 1 is plausible if the applicant does not recall the requirements of NSD 703 regarding the difference between a major and minor procedure change.

Part 2 is plausible if the applicant does not recall that a procedure may be excluded from the 10CFR50.59 review process. The answer is partially true in that minor modifications do not require a 50.59 review.

Answer C Discussion

CORRECT: See explanation above.

Answer D Discussion

INCORRECT: See explanation above.

PLAUSIBLE: Part 1 is plausible if the applicant does not recall the requirements of NSD 703 regarding the difference between a major and minor procedure change.

Part 2 is correct.

Basis for meeting the KA

The KA is matched because the applicant must have knowledge of the Fleet Procedure requirements regarding changes to technical procedures.

Basis for Hi Cog

Basis for SRO only

This question meets the following examples for an SRO only question as described in the Clarification Guidance for SRO-only Questions Rev 1 dated 03/11/2010 for questions linked to 10CFR55.43(b)(3) (Facility licensee procedures required to obtain authority for design and operating changes in the facility):

* 10 CFR 50.59 screening and evaluation process
* Processes for changing the plant or plant procedures

Job Level	Cognitive Level	QuestionType	Question Source
SRO	Comprehension	NEW	

Development References

Learning Objectives:
1) ADM-OP #2

References:
1) NSD 703 Administrative Instructions for Technical Procedures

Student References Provided

2010 MNS SRO NRC Examination QUESTION 97

2597

C

GEN2.2 2.2.6 - GENERIC - Equipment Control

uipment Control

knowledge of the process for making changes to procedures. (CFR: 41.10 / 43.3 / 45.13)

401-9 Comments:

Remarks/Status
401-9 Comments: Since 50.59 evaluations are NOT ever required for a minor change, I am not convinced that "A" is plausible. Consider rewriting distractor "A" or modifying the question stem to validate "A". ---------- Resolution / Comments: Revised question to ask a separate question about 10CFR50.59 reviews in general. Also, in the stem of the question, changed "should" to 'shall" per Lead Examiner's General Comments. See attached file for proposed revision to question.

Question 97 References:

From NSD 703:

2. If the procedure change or revision does not alter the results, requirements, or methods by which a procedure is performed, go to 703.5 for processing a minor procedure revision or 703.7 for processing a minor procedure change.

3. The list below provides some examples of changes that fit the definition of a minor procedure revision or minor procedure change:

   Note: This list is not intended to be all inclusive.

   a. Incorporating previously approved changes.

   b. Correct editorial errors (e.g., misspelled words, grammatical errors, typographical errors).

   c. During the certification process, if the electronic files have formatting differences from the approved version (e.g., line endings, page endings, word wraps).

   d. Correct, delete, or add information (e.g., numbering or references to steps, pages, enclosures, or procedures, work location information, references to other documents, notes, cautions, warnings):

      - Adding, deleting, or correcting references to documents that are no longer applicable (e.g., Site Directive deleted in favor of an NSD).
      - Changing the assigned part sequence numbers but the referenced part does not change (e.g., Stock Code Numbers).
      - Changing the part number where an acceptable substitute has been identified under the Acceptable Substitute Program.

   e. Correct, delete, or add nontechnical or administrative actions.

   f. Add/delete inspection/verification signatures (e.g., QC Hold Point, Concurrent Verification).

   g. Modify the format of a step or section, but not change the results:

      - Rephrasing a step, without changing its scope or results, to clarify.
      - Rephrasing to avoid ambiguous wording (e.g., moving from general to specific).
      - Changing units in a procedure data sheet (e.g., Scale face is marked in inches, but the procedure specified readings in percent. Rather than requiring the technician to perform the conversion each time the procedure is performed, change the procedure to reflect field configuration.)

   h. Reflect changes in administrative work practices that are not commitment items:

      - Dividing Test Equipment into Test Equipment and Other Equipment.
      - Deleting "Verify to Control Copy" step (now on PPR).
      - Deleting step for Supervisor to NA steps before beginning procedure (now covered in NSD 704).
      - Deleting or adding step to "Get key to open cabinet" (when cabinet is no longer locked or is being locked).

   i. Document changes initiated/substantiated by other processes evaluated in accordance with NSD 228 (Applicability Determination):

      - Equipment number changes evaluated under the engineering change process.

b. Appendix M may be added to and reformatted as necessary to make it more applicable to a specific group. However, information shall not be removed from this appendix.

c. Document retention requirements do not apply to Appendix M.

d. The Reviewer's signature on the Procedure Change Process Record indicates that the procedure has been reviewed in accordance with Appendix M.

5. An Applicability Determination (NSD 228) is NOT required for a minor procedure change.

6. The Reviewer shall perform a detailed line by line review of all information changed as follows:

a. Ensure information contained within the procedure change is accurate and complete and that sufficient documentation is required by the procedure change to ensure the intent of the procedure is met.

b. Ensure WARNINGS or CAUTIONS are used appropriately to minimize risk to personnel or equipment.

c. Ensure the step(s) affected by the change can be accomplished in the sequence written.

d. Ensure the step(s) affected by the change meets the current Technical Specifications, UFSAR, SLCs, NSDs, Site Directives, etc.

e. Ensure the step(s) affected by the change provides for smooth interaction between site groups and efficient utilization of site resources.

7. A review of a minor procedure change does not require an extensive review of material not changed. Review the remaining parts of the procedure NOT changed to verify the following:

a. No missing procedure steps or pages.

b. No obvious formatting problems created by the revision:

- Inappropriate page breaks
- Cautions, Warnings or Notes not on same page with applicable step
- Incorrect step numbering

c. Change was appropriately incorporated into ALL affected parts of the procedure.

8. The Reviewer shall determine the need for cross-disciplinary or additional reviews based on the following:

a. Response of a system under direct control of another group will be altered.

b. Steps in a procedure may affect the use or operation of equipment under another group's control.

c. Another group will be required to provide personnel to assist in the performance of a procedure.

d. In cases where specific disciplines or training is needed other than that of the Reviewer to ensure a complete technical review of the change.

e. Procedures which affect or involve the Site Emergency Plan shall be reviewed by the Site Emergency Planning Section. Procedures which involve Environmental Emergency Response plans (part of the Site Emergency Plan) shall also be reviewed by the Site Environmental Management Section.

GEN2.3 2.3.12 - GENERIC - Radiation Control

Radiation Control

Knowledge of radiological safety principles pertaining to licensed operator duties, such as containment entry requirements, fuel handling responsibilities, access to locked high-radiation areas, aligning filters, etc. (CFR: 41.12 / 45.9 / 45.10)

SLC 16.11.20 (Gas Storage Tanks) limits the quantity of radioactivity in each Waste Gas Decay Tank (WGDT).

The basis for this limit assures the amount of radioactivity released would be substantially lower than the dose guideline values of _____.

Which One (1) of the following completes the statement above?

A. 10 CFR 20 during routine WGDT releases.

B. 10 CFR 100 during routine WGDT releases.

C. 10 CFR 20 in the event of a WG System leak or failure.

D. 10 CFR 100 in the event of a WG System leak or failure.

General Discussion

This SLC considers postulated radioactive releases due to a waste gas system leak or failure, and limits the quantity of radioactivity in each pressurized gas storage tank in the WASTE GAS HOLDUP SYSTEM to assure that a release would be substantially below the dose guideline values of 10 CFR Part 100 for a postulated event.

Answer A Discussion

INCORRECT: See explanation above.

PLAUSIBLE: Answer is plausible because the "normal" release limits are delineated in 10CFR20 which provides the limits for what can routinely be released to the environment. It would reasonable for the applicant to misinterpret the basis of the limits for the quantity of radioactivity allowed to be stored in a WGDT to be contained in this document.

Answer B Discussion

INCORRECT: See explanation above.

PLAUSIBLE: First part of the answer is correct, 10CFR100 is the basis for the dose guidelines. Second part of the answer is plausible because it would be reasonable for the applicant to associate the limits in SLC 16.11.20 to be associated with routine releases.

Answer C Discussion

INCORRECT: See explanation above.

PLAUSIBLE: Answer is plausible because the "normal" release limits are delineated in 10CFR20 which provides the limits for what can routinely be released to the environment. It would reasonable for the applicant to misinterpret the basis of the limits for the quantity of radioactivity allowed to be stored in a WGDT to be contained in this document.
Second part of the answer is correct.

Answer D Discussion

CORRECT: See explanation above.

Basis for meeting the KA

KA is matched because the knowledge contained in the basis for this SLC requires the applicant to recall information that is directly related to the radiological safety principle of the protection of the public by limiting the potential release of radioactive gases which could affect the public. Knowledge of the controlling document (10CFR100) and the limiting condition is a condition of a SRO license required to operate the station.

Basis for Hi Cog

Basis for SRO only

This question meets the following criteria for an SRO only question as described in the "Clarification Guidance for SRO-only Questions (Rev 1 dated 03/11/2010)" under the Screening Criteria for question linked to 10CFR55.43(b)(2) (Tech Specs):

1) It can NOT be answered solely by knowing < 1 hour Tech Specs.
2) It can NOT be answered solely by knowing the LCO/TRM information listed "above-the-line".
3) It can NOT be answered by knowing the Tech Spec Safety Limits or their bases.
4) It DOES require the applicant to have detailed knowledge of Tech Spec basis information to determine the correct answer.

Job Level	Cognitive Level	QuestionType	Question Source
SRO	Memory	BANK	MNS Bank WEWGN04

Development References
OP-MC-WE-WG Obj. 6 SLC 16.11.20

Student References Provided

GEN2.3 2.3.12 - GENERIC - Radiation Control

Radiation Control

Knowledge of radiological safety principles pertaining to licensed operator duties, such as containment entry requirements, fuel handling responsibilities, access to locked high-radiation areas, aligning filters, etc. (CFR: 41.12 / 45.9 / 45.10)

2010 MNS SRO NRC Examination

QUESTION 98

2598

D

401-9 Comments:

Remarks/Status

401-9 Comments:

No comment.

Resolution / Comments:

N/A

Question 98 References:

From OP-MC-WE-WG Objectives

OBJECTIVES

	OBJECTIVE	NLO	NLOR	LPRO	LPSO	LOR
1	State the purpose of the Waste Gas (WG) System. WEWG001	X	X	X	X	X
2	Describe the system flowpath during normal operation, shutdown operation and waste gas discharge. WEWG002	X	X	X	X	X
3	List four components that discharge waste gas into the WG Header. WEWG003	X	X	X	X	X
4	List two types of non-radioactive waste gas discharged into the WG Header. WEWG004	X	X	X	X	X
5	List the WG Discharge Flow Controller (WG-160) trips. WEWG005	X	X	X	X	X
6	Concerning the Selected Licensee Commitments (SLC) related to the WG System:					
	• Discuss any commitments and their applicability.			X	X	X
	• For any commitments that have action required within one hour, state the action.			X	X	X
	• Given a set of parameter values or system conditions, determine if any commitment is (are) not met and any action(s) required within one hour.			X	X	X
	• Discuss the basis for a given commitment.					
	* **SRO only** WEWG007				X	*

16.11 RADIOLOGICAL EFFLUENT CONTROLS

16.11.20 Gas Storage Tanks

COMMITMENT The quantity of radioactivity contained in each gas storage tank shall be limited ≤ 49,000 Curies noble gases (considered as Xe-133).

APPLICABILITY At all times.

REMEDIAL ACTIONS

CONDITION	REQUIRED ACTION	COMPLETION TIME
A. Quantity of radioactive material in tank not within limit.	A.1 Suspend all additions of radioactive material to the tank.	Immediately
	AND	
	A.2 Reduce the tank contents to within limit.	48 hours

TESTING REQUIREMENTS

TEST	FREQUENCY
TR 16.11.20.1 Verify the quantity of radioactive material contained in each gas storage tank is within limit when radioactive materials are being added to the tank.	24 hours

BASES

This SLC considers postulated radioactive releases due to a waste gas system leak or failure, and limits the quantity of radioactivity in each pressurized gas storage tank in the WASTE GAS HOLDUP SYSTEM to assure that a release would be substantially below the dose guideline values of 10 CFR Part 100 for a postulated event.

Restricting the quantity of radioactivity contained in each gas storage tank provides assurance that in the event of an uncontrolled release of the tank's contents, the resulting total body exposure to a MEMBER OF THE PUBLIC at the nearest exclusion area boundary will not exceed 0.5 rem. This is consistent with Standard Review Plan 11.3, Branch Technical Position ETSB 11-5, "Postulated Radioactive Releases Due to a Waste Gas System Leak or Failure," in NUREG-0800, July 1981.

REFERENCES

None

Parent Question WEWGN04

1 Pt SLC 16.11.20 limits the quantity of radioactivity in each Waste Gas Decay Tank (WGDT). What is the basis for this limit?

A. Assures the amount of radioactivity released would be substantially lower than the dose guideline values of 10 CFR 20 during routine WGDT releases.

B. Assures the amount of radioactivity released would be substantially lower than the dose guideline values of 10 CFR 100 during routine WGDT releases.

C. Assures the amount of radioactivity released would be substantially lower than the dose guideline values of 10 CFR 20 in the event of a WG System leak or failure.

D. Assures the amount of radioactivity released would be substantially lower than the dose guideline values of 10 CFR 100 in the event of a WG System leak or failure.

Answer 114

D

SLC 16.11.20
SRO only

2010 MNS SRO NRC Examination QUESTION 99

2599

C

GEN2.3 2.3.14 - GENERIC - Radiation Control

Radiation Control

Knowledge of radiation or contamination hazards that may arise during normal, abnormal, or emergency conditions or activities. (CFR: 41.12 / 43.4 / 45.10)

Given the following plant conditions:

- You are tasked to evaluate four available work teams to perform repairs in a 1500 mREM/hr radiation field

Which ONE (1) of the following work teams would maintain station radiation dose ALARA?

A. Two qualified male workers can complete the task working together in 15 minutes. Each worker has accumulated 325 mREM for the year.

B. A team consisting of a qualified male and qualified female worker can complete the task working together in 20 minutes. Each worker has accumulated 100 mREM this year.

C. A qualified male worker who has previously performed this task can complete the task in 20 minutes. However, he has exceeded his 'Alert' level for exposure and will require a dose extension.

D. A team consisting of a qualified declared pregnant female worker and a non-qualified male worker who needs to qualify on this task can complete the task working together in 15 minutes. The female has no dose and the male worker has accumulated 200 mREM for the year.

General Discussion

To maintain station dose ALARA, the worker/team with the lowest dose for the job consistent with meeting all other exposure limits should be selected.

The single qualified male worker would receive 500 mREM to perform the work. Although he would exceed his annual ADMINISTRATIVE limit, his total exposure would be less than the other teams selected for the work.

Answer A Discussion

INCORRECT: See explanation above.

PLAUSIBLE: It would be reasonable for the applicant to eliminate the single male worker since he would exceed an ADMINISTRATIVE dose limit, even though the total dose would be less (500 mREM). However, this is the correct choice. The worker would not exceed a 10CFR20 dose limit.

The team consisting of the delcared pregnant female and male worker would have a dose of 750 mREM total and their total dose for the year would be less than the two male workers. The female worker would not exceed the total dose limit for a declared pregnant female worker (500 mREM). However, the female worker would exceed the monthly dose limit for a declared pregnant female (50 mREM). Therefore, this team could not be used.

The team consisting of the male worker and female worker would receive a total dose of 1000 mREM which would be higher than the dose for the two male workers working together (750 mREM).

It is therefore plausible for the applicant to conclude that the team consisting of the two male workers would be the correct choice.

Answer B Discussion

INCORRECT: See explanation above.

PLAUSIBLE: It would be reasonable for the applicant to eliminate the single male worker since he would exceed an ADMINISTRATIVE dose limit, even though the total dose would be less (500 mREM). However, this is the correct choice. The worker would not exceed a 10CFR20 dose limit.

The team consisting of two male workers would receive less total dose (750 mREM). However, it is plausible for the applicant to conclude that the team consisting of the male and female worker would be a better choice since their total dose for the year would be less.

The team consisting of the declared pregnant worker and the male worker would have less total dose (750 mREM). However, the female worker would exceed the monthly dose limit for a declared pregnant female worker (50 mREM).

Answer C Discussion

CORRECT: See explanation above.

Answer D Discussion

INCORRECT: See explanation above.

PLAUSIBLE: It would be reasonable for the applicant to eliminate the single male worker since he would exceed an ADMINISTRATIVE dose limit, even though the total dose would be less (500 mREM). However, this is the correct choice. The worker would not exceed a 10CFR20 dose limit.

It would be reasonable for the applicant to eliminate the team consisting of the male and female worker since the total dose for the job would be higher for this team 1000 mREM than is would for the team consisting of the declared pregnant female and male worker (750 mREM).

The total dose for the job would be the same for the team consisting of the two male workers and the team consisting of the declared pregnant female worker and the male worker (750 mREM). However, the annual dose for the two male workers would be higher and it would therefore be plausible for the applicant to chose the team conisting of the declared pregnant female and male workers.

Basis for meeting the KA

The KA is matched because the applicant must evaluate the radiation hazard to a team of workers performing repair activities.

Basis for Hi Cog

This is a higher cognitive level question because it requires more than one mental step. It requires the applicant to recall dose limits from memory and it requires the applicant to calculate the total dose for each team and compare them to each other.

Basis for SRO only

This question is SRO level knowledge because it can not be answered solely by RO knowledge of radiological safety principles (e.g., RWP requirements, stay-time, DAC-hours, etc.).

2010 MNS SRO NRC Examination QUESTION 99

2599

C

It requires the applicant to analyze the makeup of the available repair teams with regards to the total exposure for the job and the accumulated annual exposure for the teams and make a determination as to which team would be the correct choice to maintain station dose ALARA.

Job Level	Cognitive Level	QuestionType	Question Source
SRO	Comprehension	BANK	MNS Exam Bank Q# RADRPN018

Development References	Student References Provided
Lesson Plan OP-MC-RAD-RP Lesson Plan Objective RAD-RP #135	

GEN2.3 2.3.14 - GENERIC - Radiation Control

Radiation Control

Knowledge of radiation or contamination hazards that may arise during normal, abnormal, or emergency conditions or activities. (CFR: 41.12 / 43.4 / 45.10)

401-9 Comments:	Remarks/Status
	Proposed replacement for 2010 NRC Q99. Replacement question approved RFA 07/08/10.

Overlap Replacement Question 99:

Objective #132

Prior to the use of the **Emergency Exposure** dose limits, the following approvals (written or verbal) are required:

- Radiation Protection Manager or designee
- Emergency Coordinator or EOF Director

The person(s) who is/are to receive the dose must sign that they have been informed of the potential dose they will receive, have been fully briefed on the task to be accomplished and the risks of this exposure.

Objective #134

Regulatory Guide 8.14 requires a personnel **neutron** dosimeter if the neutron dose equivalent is likely to exceed 100 mrem in a quarter. Duke Power has an administrative requirement which requires all personnel entering the RCA to wear a TLD (which measures neutron dose equivalent). Estimation of neutron exposure is a method used to temporarily track exposure until the TLD is processed. Estimated neutron exposure tracking for personnel is required if the neutron dose equivalent is likely to exceed 10 mrem per entry or per job if consecutive multiple entries are required. There are two methods used to estimate neutron exposure:

- One method is to measure the neutron dose rate and then calculate the exposure based on stay time.
- The second method is to determine the gamma exposure dose and neutron exposure dose for the given area. If it is determined that the neutron to gamma ratio is essentially constant during the period of personnel exposure, then a gamma/neutron ratio can be utilized. The gamma dose received can be ratioed to find the neutron dose received.

Objective #135

ALARA is a philosophy aimed at the minimizing exposure thru a management commitment. The goals and efforts of the McGuire Nuclear station Program are simple:

- To maintain the annual dose to each individual ALARA
- To maintain the collective dose (total person-Rem) ALARA
- Both points have to be considered simultaneously, as one without the other is not ALARA.

Question 99 Parent Question:

RADRPN018

1 Pt(s) As an SRO working on a 'Complex Maintenance Plan' you are asked to evaluate four possible work teams who must repair filter housing in a 1500 mRem/hr radiation field.

Which one of the following work teams would maintain station ALARA?

A. A qualified male worker who has previously performed this task. He can complete this job in 20 minutes. This worker has exceeded his 'Alert' level for exposure and will require a dose extension.

B. Two male workers who are qualified to perform the task. Together they can perform the task in 15 minutes. Both workers have already accumulated 325 mRem this year.

C. A team of a female worker who is qualified to perform the task and a male worker who needs to qualify to this task. The female is a declared pregnant worker. The team will need 15 minutes to complete the task. The female has no dose and the male worker has 200 mRem for the year.

D. A team of a male and female both are qualified to the task but will take 20 minutes to complete the task. Each has less than 100 mRem this year.

Answer 317

A

Distracter Analysis:

A. Correct: 500 mR total
B. Incorrect: 750 per mrem total
Plausible
C. Incorrect: Declared pregnant worker.
Plausible:
D. Incorrect: 1000 mrem total

Level: SRO

KA: G2.3.2 (2.5/2.9)

Lesson Plan Objective: RAD RP Ojb. 135

Source: New

Level of knowledge: comprehension

References:
1. OP-MC-RAD-RP page 73

GEN2.4 2.4.40 - GENERIC - Emergency Procedures / Plan
Emergency Procedures / Plan
Knowledge of SRO responsibilities in emergency plan implementation. (CFR: 41.10 / 43.5 / 45.11)

Given the following plant conditions:

- An Unusual Event was declared on Unit 2.
- Initial Notification to the States, Counties and the NRC has been completed.
- The Emergency Coordinator has just made the decision to upgrade the classification to an Alert

The NRC is required to be notified immediately but no more than __(1)__ after change of classification.

After the initial notification of the change in classification is made to the State and Counties, follow up notifications are required to be made every __(2)__ until the emergency is terminated.

Which ONE (1) of the following completes the statements above?

A. 1. 1 hour
   2. hour

B. 1. 1 hour
   2. 4 hours

C. 1. 15 minutes
   2. hour

D. 1. 15 minutes
   2. 4 hours

General Discussion

In the scenario given, the applicant is presented with a situation where an NOUE was declared and all required initial notifications to the State, Counties, and the NRC has been completed. Subsequently, an escalation to an Alert occurs and the applicant is asked to evaluate the current notification requirements both to the NRC and the affect on the requirement for follow up notifications. Per our procedure, RP/29 the follow-up notification requirement will change from 4 hours (NOUE) to a new requirement of 1 hour for the new Alert classification. The NRC notification procedure, RP/10 requires that the NRC be notified immediately but not more than 1 hour after a change in classification.

Answer A Discussion

CORRECT: See explanation above

Answer B Discussion

INCORRECT: See explanation above.

PLAUSIBLE: Part 1 is correct and therefore plausible.

Part 2 is plausible because the follow notification requirement for a NOUE is 4 hours which was in effect prior to the upgrade in classification.

Answer C Discussion

INCORRECT: See explanation above.

PLAUSIBLE: Part 1 is plausible because this is correct for every offsite agency except for the NRC. The applicant may misapply the 15 minute requirement to the NRC.

Part 2 is correct and therefore plausible.

Answer D Discussion

IINCORRECT: See explanation above.

PLAUSIBLE: Part 1 is plausible because this is correct for every offsite agency except for the NRC. The applicant may misapply the 15 minute requirement to the NRC.

art 2 is plausible because the follow notification requirement for a NOUE is 4 hours which was in effect prior to the upgrade in classification.

Basis for meeting the KA

The KA is matched because the applicant must have knowledge of the SRO (OSM) responsibilities for implementing the Emergency Plan (i.e. notification requirements to offsite agencies after an esculation in emergency classification).

Basis for Hi Cog

This is a higher cognitive level question because it requires more than one mental step. The applicant must first evaluate all of the information provided and then apply multiple rules to a change in a given situation. This requires the applicant relate understanding the rules pertaining to offsite notification and apply them to a dynamic situation.

Basis for SRO only

This question is not tied to 10CFR50.43 (b) but can be classified as an SRO Plant Specific Example. This question requires additional knowledge required for the higher license level and is unique to the SRO/OSM position. At MNS it is the responsability of the SRO to complete the notifications to offsite agencies and NRC notification to the NRC in the event that an emergency is declared. Per Lesson plan OP- MC-EP-EMP (Emergency Plan) the objectives, #12 (Complete the ENF) and #14 (Complete the NRC event notification worksheet) are SRO ONLY objectives. (LPSO). Both the understanding of the requirements and the actual completion of the required paperwork along with the transmittal are SRO ONLY tasks at MNS.

Job Level	Cognitive Level	QuestionType	Question Source
SRO	Comprehension	NEW	

Development References

Learning Objective:
1) EP-EMP #12 and #14

P/29 (Notifications to Offsite Agencies From The C/R)
c. 4.2 Pg 1 of 8

RP/10 (NRC Immediate Notification Requirements)
Enc 4.1 Pg 1 of 14

Student References Provided

2010 MNS SRO NRC Examination QUESTION 100

2600

A

GEN2.4 2.4.40 - GENERIC - Emergency Procedures / Plan

ergency Procedures / Plan

nowledge of SRO responsibilities in emergency plan implementation. (CFR: 41.10 / 43.5 / 45.11)

401-9 Comments:

Remarks/Status
401-9 Comments: No comment. ---------- ---------- Resolution / Comments: N/A

Question 100 References:

OP-MC-EP-EMP Obj: 12 & 14

OBJECTIVES

	OBJECTIVE	NLO	NLOR	LPRO	LPSO	LOR
10	Given the EPIP's and the emergency situation, classify the event.				X	X
11	Given the EPIP's and the emergency situation, provide the appropriate Protective Action Recommendations (PAR's).				X	X
12	Given the EPIP's and the emergency situation, complete the Emergency Notification Form.				X	X
13	Describe the use of the Selective Signaling Phone System to notify the State and County.	X	X	X	X	X
14	Given the EPIP's and the emergency situation, complete the appropriate portions of the procedure for an NRC Event Notification Worksheet.				X	X
15	State the requirements for Initial and Follow-up Notifications including: • Time Requirements • Agencies to be contacted			X	X	X

Enclosure 4.2
Completion and Transmission of a Follow-up Message

NOTE: New initial messages for higher classification upgrades are addressed in Enclosure 4.1. {PIP-M-01-3711}

1. Make follow-up notifications according to the following table:

Follow-up Notifications

1. Follow-up notifications to the State(s) and Counties must be made according to the following schedule:

   -For a NOUE, every 4 hours until the emergency is terminated. For ALERT, SAE, or GE every hour until the emergency is terminated.

   OR

   -If there is any significant change to the situation (make notification as soon as possible).

   OR

   -As agreed upon with an Emergency Management official from each individual agency. Documentation shall be maintained for any agreed upon schedule change. The interval for ALERT, SAE, and GE shall not be greater than 2 hours to any agency.

2. If a follow-up is due and an upgrade to a higher classification is declared, there is no need to complete the follow-up ENF. In this case, the offsite agencies must be notified that the pending follow-up is being superseded by an upgrade to a higher classification and information will be provided.

3. Follow-up messages in the General Emergency classification that involve an upgrade in PARs must be communicated to the offsite agencies as soon as possible and within 15 minutes.

2. Complete an Emergency Notification Form by one of the following:

   ☐ Obtain a preprinted ENF.

   OR

   ☐ Obtain a blank ENF.

4.1.1	Events Requiring IMMEDIATE NOTIFICATIONS: REPORTABLE EVENTS Corresponding 10CFR Section in Brackets [ ]	REPORTING TIME REQUIREMENTS	
4.1.1.1 [50.72a(1)(i)]	The declaration of any of the Emergency Classes specified in the McGuire Emergency Plan	4.1.1.1	Immediately after notification to state(s) and local government (counties) and not later than one hour after the time the Emergency Class was declared. Immediately report any change from one Emergency Class to another or a termination of the Emergency Class. (Use Enclosure 4.2.) See follow up requirements in section 4.1.6 of this procedure.
	or		
[50.72c(1)(ii)]	any change from one Emergency Class to another		
	or		
[50.72c(1)(iii)]	a termination of the Emergency Class		
4.1.1.2 [20.1906]	Events involving receiving and opening packages containing quantities of radioactive material in excess of a Type A quantity as defined in section 71.4 and appendix A to part 71 of this chapter when;	4.1.1.2	NOTE: Reporting under 10CFR20.1906 should be made as follows: the licensee shall immediately notify the final delivery carrier and by telephone and telegram, mailgram, or facsimile and the NRC Operations Center at 9-301-816-5100.
[20.1906d(1)]	1) Removable radioactive surface contamination exceeds the limits of section 71.87(I) of 10CFR20;		
	or		
[20.1906d(2)]	2) External radiation levels exceed the limits of section 71.47 of this chapter.		
4.1.1.3 [20.2201a(i)]	Any lost, stolen, or missing licensed material in an aggregate quantity equal to or greater than 1,000 times the quantity specified in appendix C to part 20 under such circumstance that it appears to the licensee that an exposure could result to persons in unrestricted areas.	4.1.1.3	Immediately after its occurrence becomes known to the licensee.
	or		
[20.2201a(ii)]	3) Within 30 days after the occurrence of any lost, stolen, or missing licensed material becomes known to the licensee, all licensed material in a quantity greater than 10 times the quantity specified in appendix C to part 20 that is still missing at this time.		