Tennessee Valley Authority
Tellico Spillway Gate Inspection

Gate: 1

RIGHT GATE ARM
(LOOKING DOWNSTREAM)

Inspection Team: Webb Patten
Weather: clear and cool

Date: 11/29/08
Sheet: 1

☑ Paint Condition :
- ☐ Good
- ☑ Fair
- ☐ Bad

☑ Embed :
- ☑ Coating good
- ☑ Rubbing none
- ☑ Grout good
- ☑ Gate Stop see note

☒ Gate Seals : N/A
- ☐ Bottom
- ☐ Right

Notes:

☑ Gate Seal Bar :
- ☒ Bottom N/A
- ☑ Bolted Conn. areas of rust
- ☒ Side N/A
- ☑ Bolted Conn. see note

☑ Standing Water see note
☑ Debris minor

☒ Lifting Lug : N/A
- ☐ Good
- ☐ Fair
- ☐ Bad

DETAIL A
(Lifting Lug Detail)

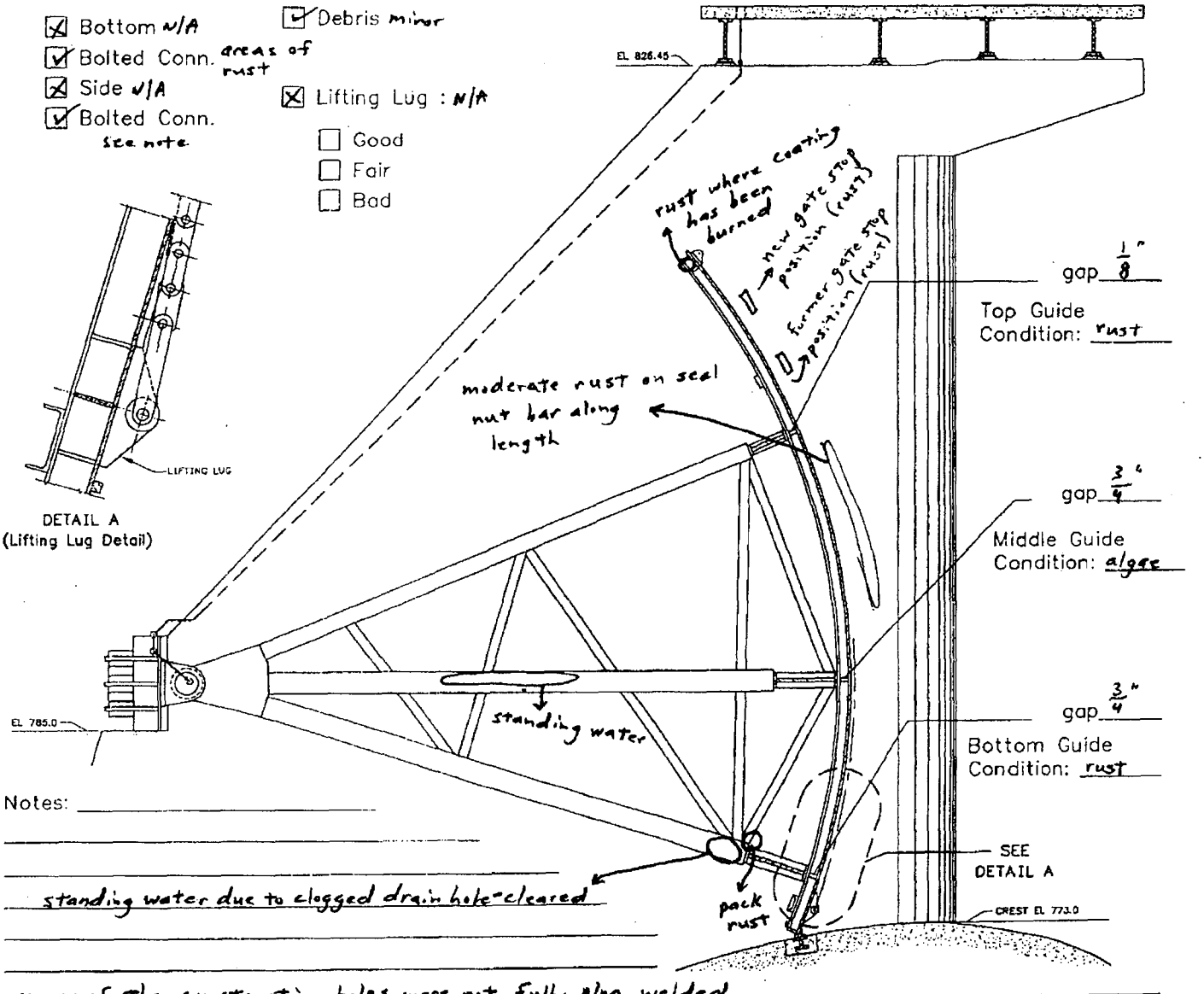

Notes:

standing water due to clogged drain hole-cleared

many of the construction holes were not fully plug welded

Tennessee Valley Authority
Tellico Spillway Gate Inspection

Gate: 1

LEFT GATE ARM
(LOOKING DOWNSTREAM)

Inspection Team: Webb Patten
Weather: clear and cool

Date: 11/29/08
Sheet: 2

Notes: _____

☑ Paint Condition :
- ☑ Good
- ☐ Fair
- ☐ Bad

☑ Embed :
- ☑ Coating good
- ☑ Rubbing none
- ☑ Grout good
- ☑ Gate Stop see note
- ☐ Bottom
- ☐ Right

☒ Gate Seals : N/A

☑ Gate Seal Bar :
- ☒ Bottom
- ☑ Bolted Conn. areas of rust
- ☒ Side
- ☑ Bolted Conn. see note

☑ Standing Water see note
☑ Debris minor

☒ Lifting Lug : N/A
- ☐ Good
- ☐ Fair
- ☐ Bad

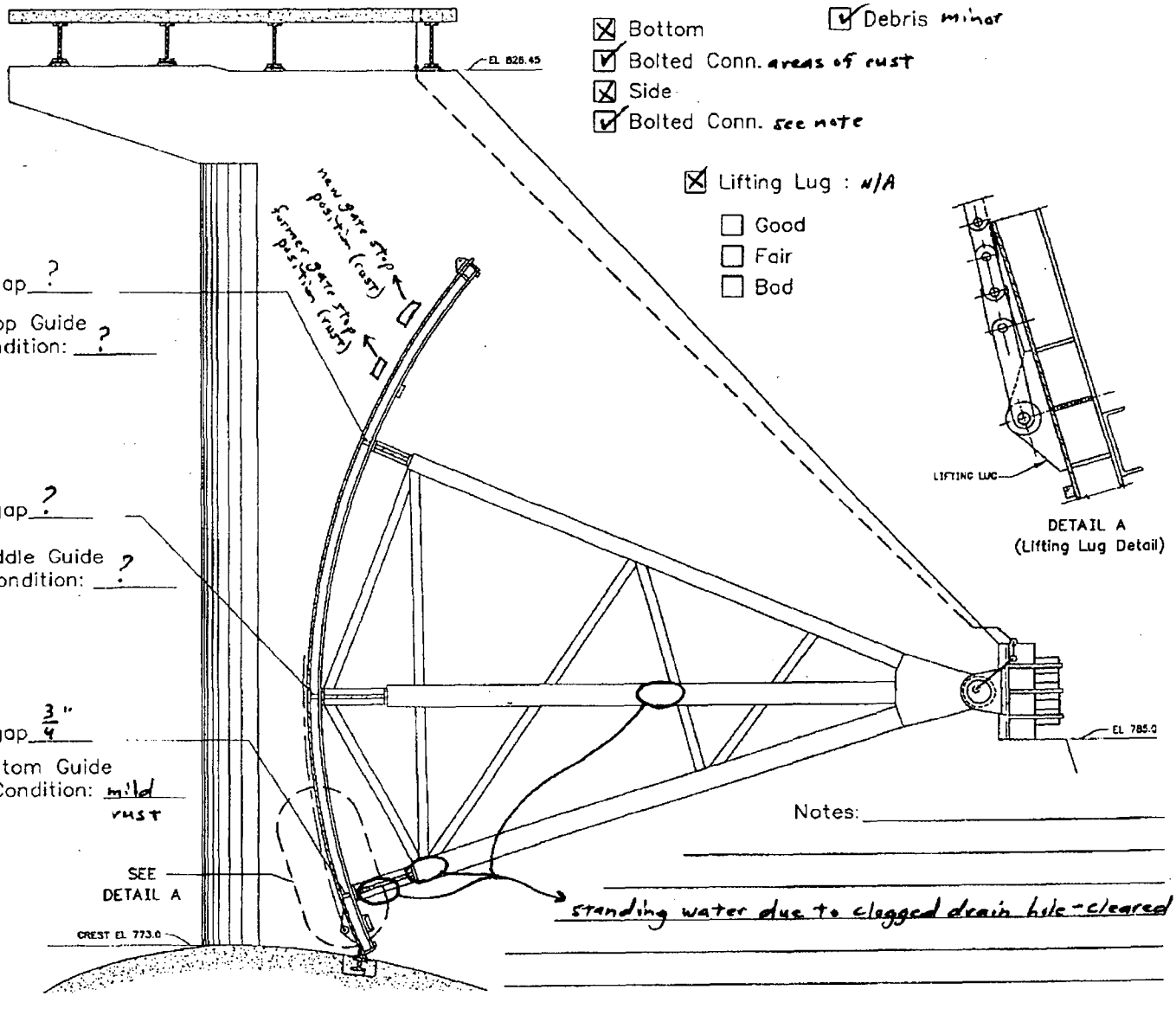

DETAIL A
(Lifting Lug Detail)

Notes: _____

standing water due to clogged drain hole - cleared

Tennessee Valley Authority
Tellico Spillway Gate Inspection

Gate: 1

TOP SUPPORT FRAME

Inspection Team: Webb Patton

Date: 11/29/08

Weather: clear and cool

Sheet: 3

☑ Paint Condition :

- ☑ Good
- ☐ Fair
- ☐ Bad

☑ Drain Holes clear (see note)

☑ Standing Water none

☑ Debris minor

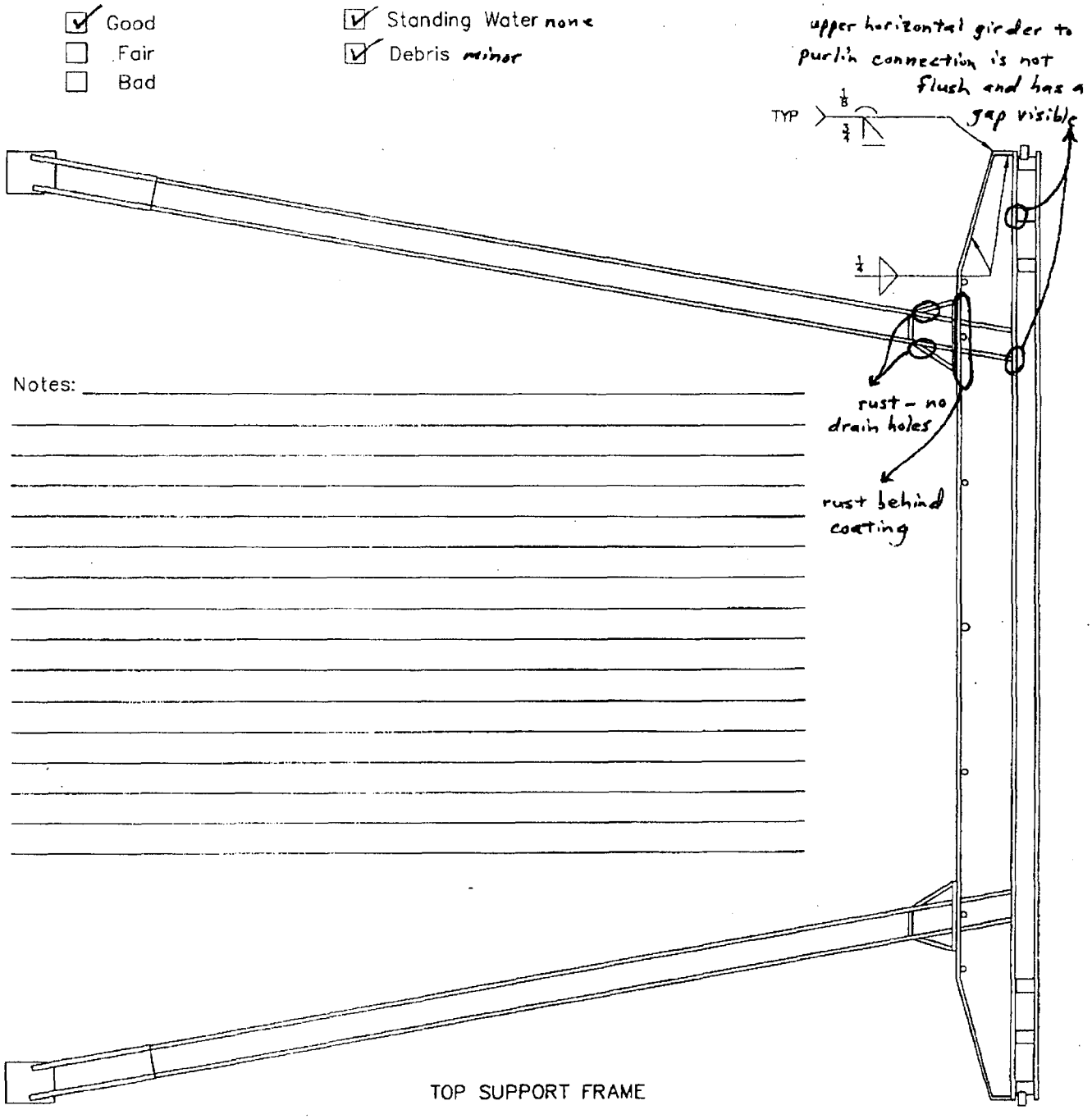

Notes:

TOP SUPPORT FRAME

Tennessee Valley Authority
Tellico Spillway Gate Inspection

Gate: 1

MIDDLE SUPPORT FRAME Inspection Team: Webb Patten Date: 11/29/00
Weather: clear and cool Sheet: 4

☑ Paint Condition :
- ☐ Good
- ☑ Fair
- ☐ Bad

☑ Drain Holes see note
☑ Standing Water see note
☑ Debris minor to moderate

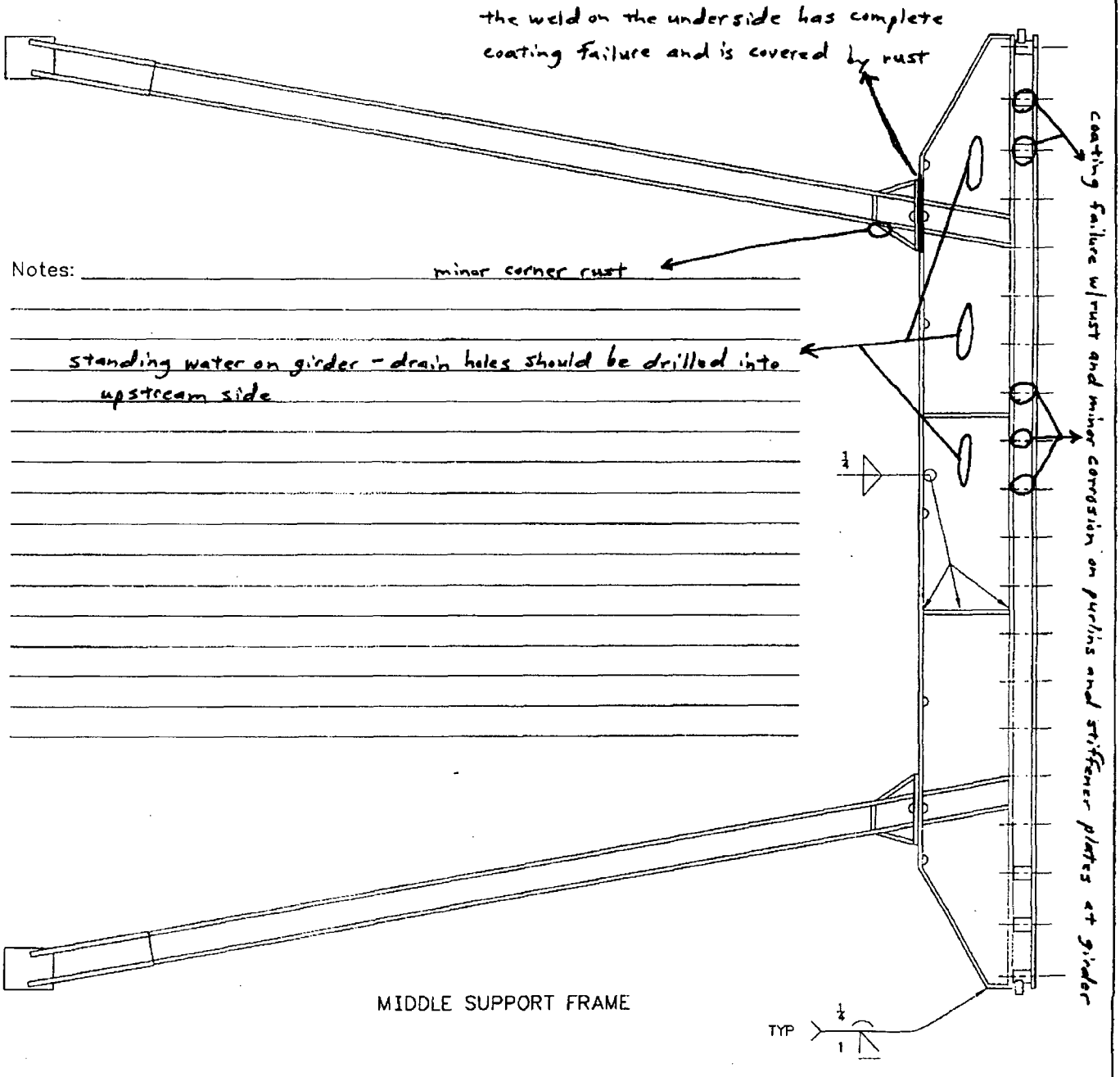

Notes:

MIDDLE SUPPORT FRAME

Tennessee Valley Authority
Tellico Spillway Gate Inspection

Gate: 1

BOTTOM SUPPORT FRAME Inspection Team: Webb Patten Date: 11/29/08
Weather: clear and cool Sheet: 5

☑ Paint Condition :
- ☐ Good
- ☑ Fair
- ☐ Bad

☑ Drain Holes clear
☑ Standing Water none
☑ Debris minor

Notes:

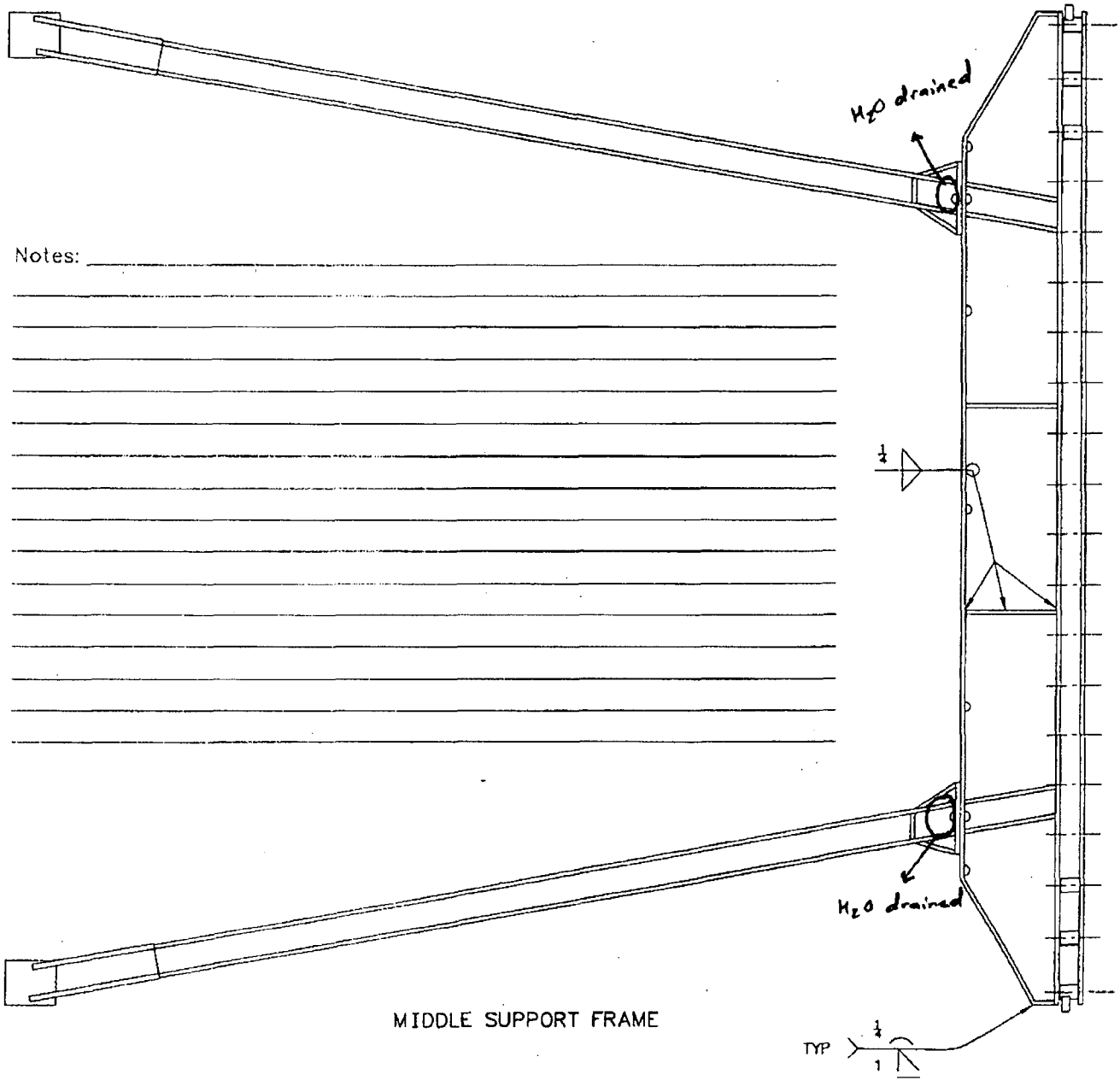

Tennessee Valley Authority
Tellico Spillway Gate Inspection

Gate: 1

(DOWNSTREAM) SKIN PLATE Inspection Team: Webb. Patten Date: 11/29/08

Weather: clear and cool Sheet: 6

Notes: (1) areas of minor to moderate rust on skin plate and in the bottom corners along the length of the entire bottom section. To moderate rust is on and around the seal nuts. The nuts at the connection points are moderately rusted.

☑ Paint Condition :

- ☐ Good
- ☑ Fair
- ☐ Bad

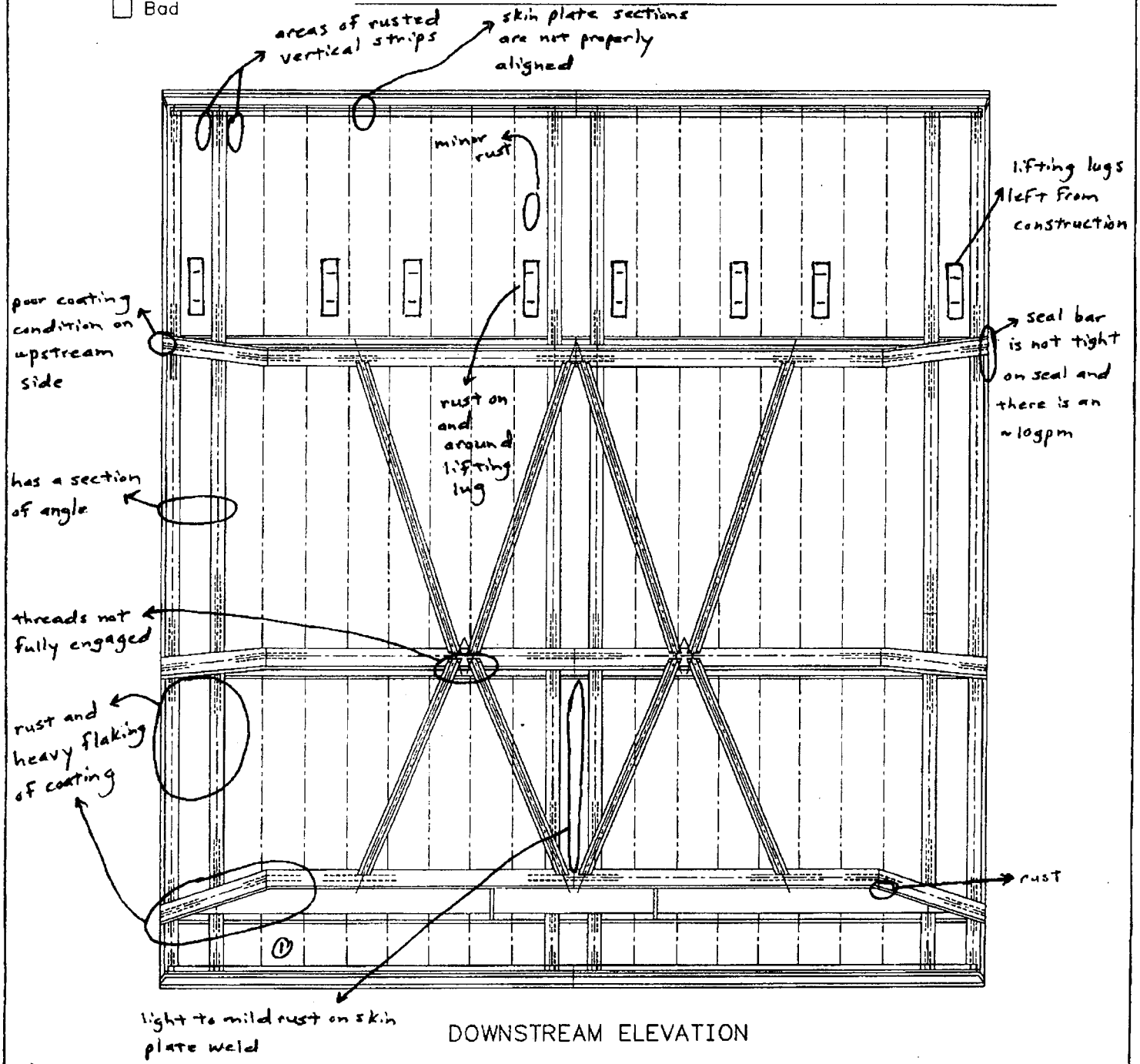

DOWNSTREAM ELEVATION

Tennessee Valley Authority
Tellico Spillway Gate Inspection

Gate: 1

(TRUNNION DETAILS) Inspection Team: Webb Patten Date: 11/29/08

Weather: clear and cool Sheet: 7

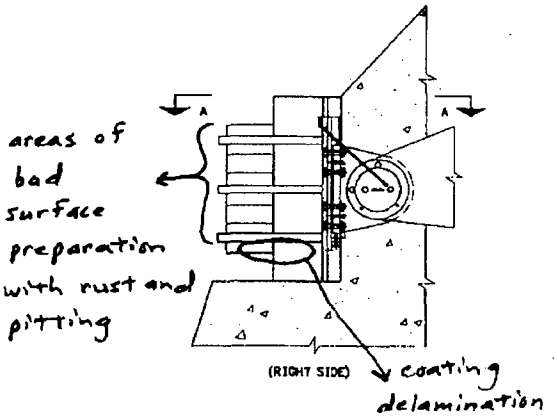

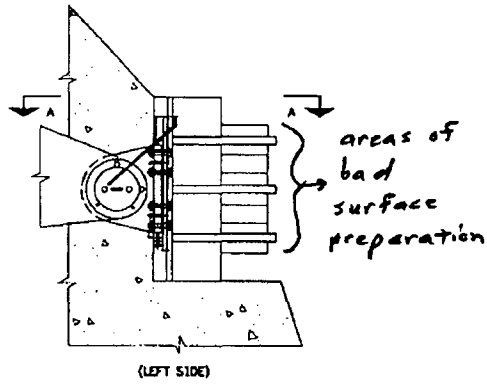

- [x] Paint Condition :
  - [x] Good
  - [ ] Fair
  - [ ] Bad
- [x] Anchor Rods :
  - [x] Good w/ mild rust
  - [ ] Fair
  - [ ] Bad (rust)
- [x] Grease Line:
  - [x] Good
  - [ ] Fair
  - [ ] Bad
- [x] Trunnion Embed Condition:
  - [x] Cracked none
  - [x] Spalled none
  - [x] Satisfactory
- [x] Lock Plate good
- [x] Drain Holes clogged on right side - cleared
- [x] Standing Water drained on right side
- [x] Debris minor

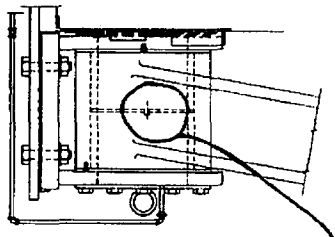

TRUNNION ARRANGEMENT – RIGHT SIDE
SECTION A–A

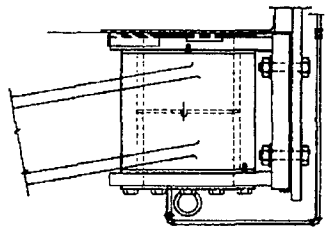

TRUNNION ARRANGEMENT – LEFT SIDE
SECTION A–A

Notes:

Tennessee Valley Authority
Tellico Spillway Gate Inspection

Gate: 1

(UPSTREAM) SKIN PLATE Inspection Team: Webb Patten Date: 11/29/08

Weather: clear and cool Sheet: 8

Notes: could not inspect due to headwater elevation

☒ Paint Condition : N/A

- ☐ Good
- ☐ Fair
- ☐ Bad

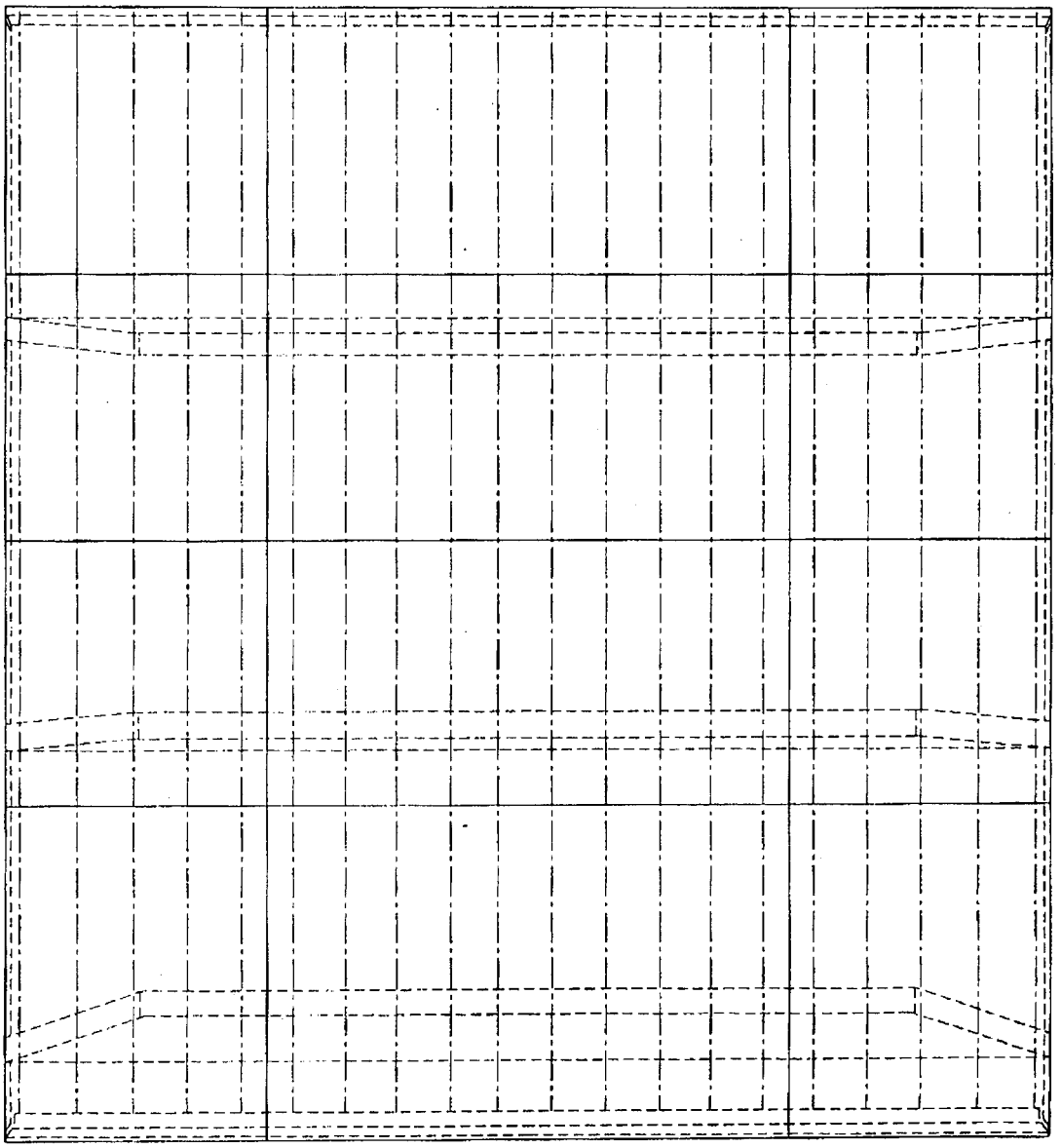

UPSTREAM ELEVATION

Tennessee Valley Authority
Tellico Spillway Gate Inspection

Gate: 2

RIGHT GATE ARM
(LOOKING DOWNSTREAM)

Inspection Team: Travis Simpson
Weather: cool and clear

Date: 11/29/08
Sheet: 1

☑ Paint Condition :
- ☐ Good
- ☑ Fair
- ☐ Bad

☑ Embed :
- ☑ Coating good
- ☑ Rubbing none
- ☑ Grout good
- ☑ Gate Stop see note
- ☐ Bottom
- ☐ Right

☒ Gate Seals : N/A

Notes:

☑ Gate Seal Bar :
- ☒ Bottom N/A
- ☑ Bolted Conn. good
- ☒ Side N/A
- ☑ Bolted Conn. see note

☑ Standing Water see note
☑ Debris minor

☒ Lifting Lug : N/A
- ☐ Good
- ☐ Fair
- ☐ Bad

DETAIL A
(Lifting Lug Detail)

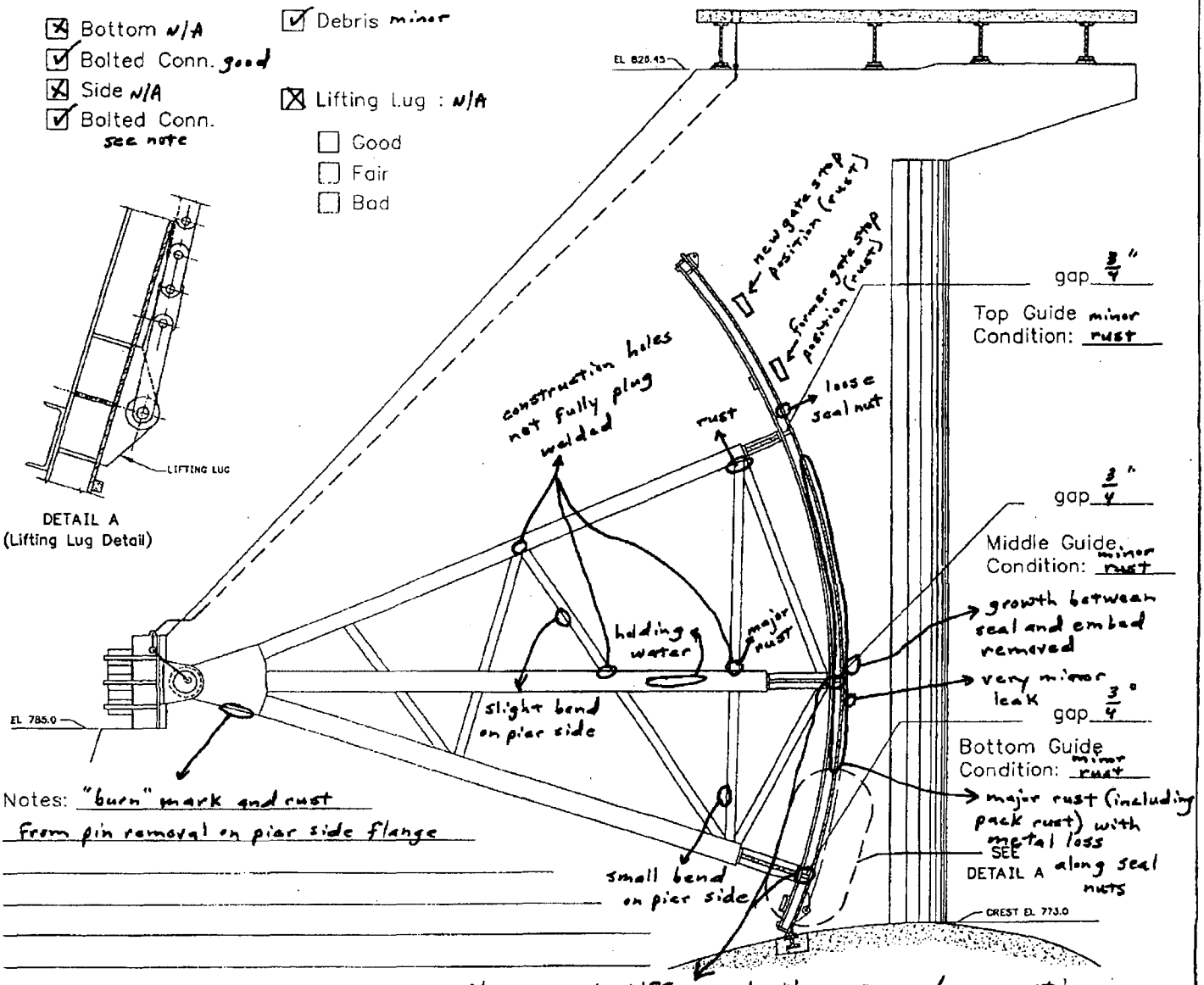

Notes: "burn" mark and rust from pin removal on pier side flange

the support stiffeners in these areas have coating failure and rust to varying degrees

Tennessee Valley Authority
Tellico Spillway Gate Inspection

Gate: 2

LEFT GATE ARM
(LOOKING DOWNSTREAM)

Inspection Team: Travis Simpson
Weather: clear and cool

Date: 11/29/08
Sheet: 2

Notes: _____

☑ Paint Condition :
- ☐ Good
- ☑ Fair
- ☐ Bad

☑ Embed :
- ☑ Coating good
- ☑ Rubbing none
- ☑ Grout good
- ☑ Gate Stop see note

☐ Bottom
☐ Right

☒ Gate Seals : N/A

☑ Gate Seal Bar :
- ☒ Bottom N/A
- ☑ Bolted Conn. good
- ☒ Side N/A
- ☑ Bolted Conn. see note

☑ Standing Water none
☑ Debris minor

☒ Lifting Lug : N/A
- ☐ Good
- ☐ Fair
- ☐ Bad

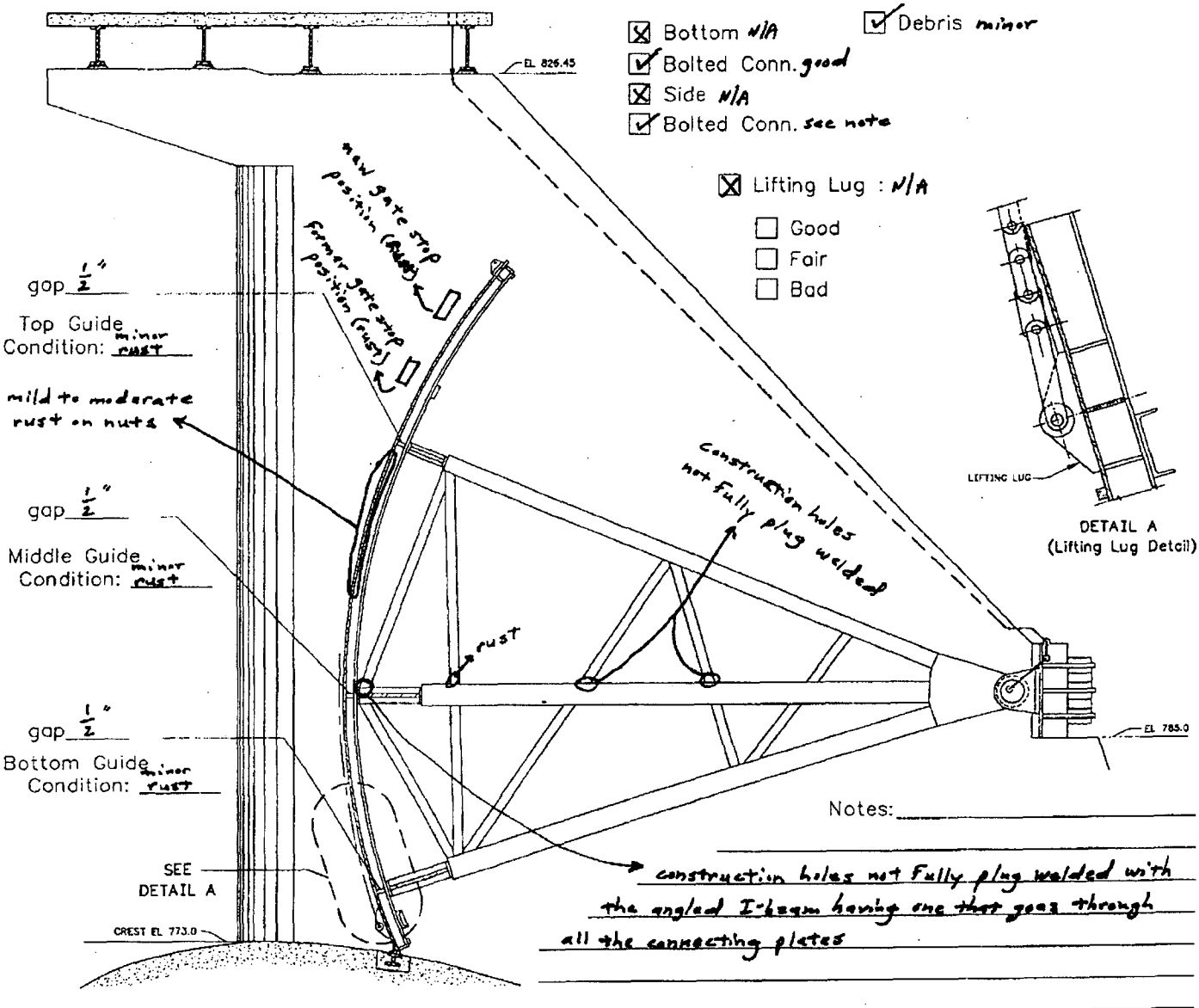

DETAIL A
(Lifting Lug Detail)

Notes: _____

construction holes not fully plug welded with the angled I-beam having one that goes through all the connecting plates

Tennessee Valley Authority
Tellico Spillway Gate Inspection

Gate: 2

TOP SUPPORT FRAME

Inspection Team: Travis Simpson

Weather: clear and cool

Date: 11/29/08

Sheet: 3

☑ Paint Condition :

- ☐ Good
- ☑ Fair
- ☐ Bad

☑ Drain Holes clear

☑ Standing Water none

☑ Debris minor

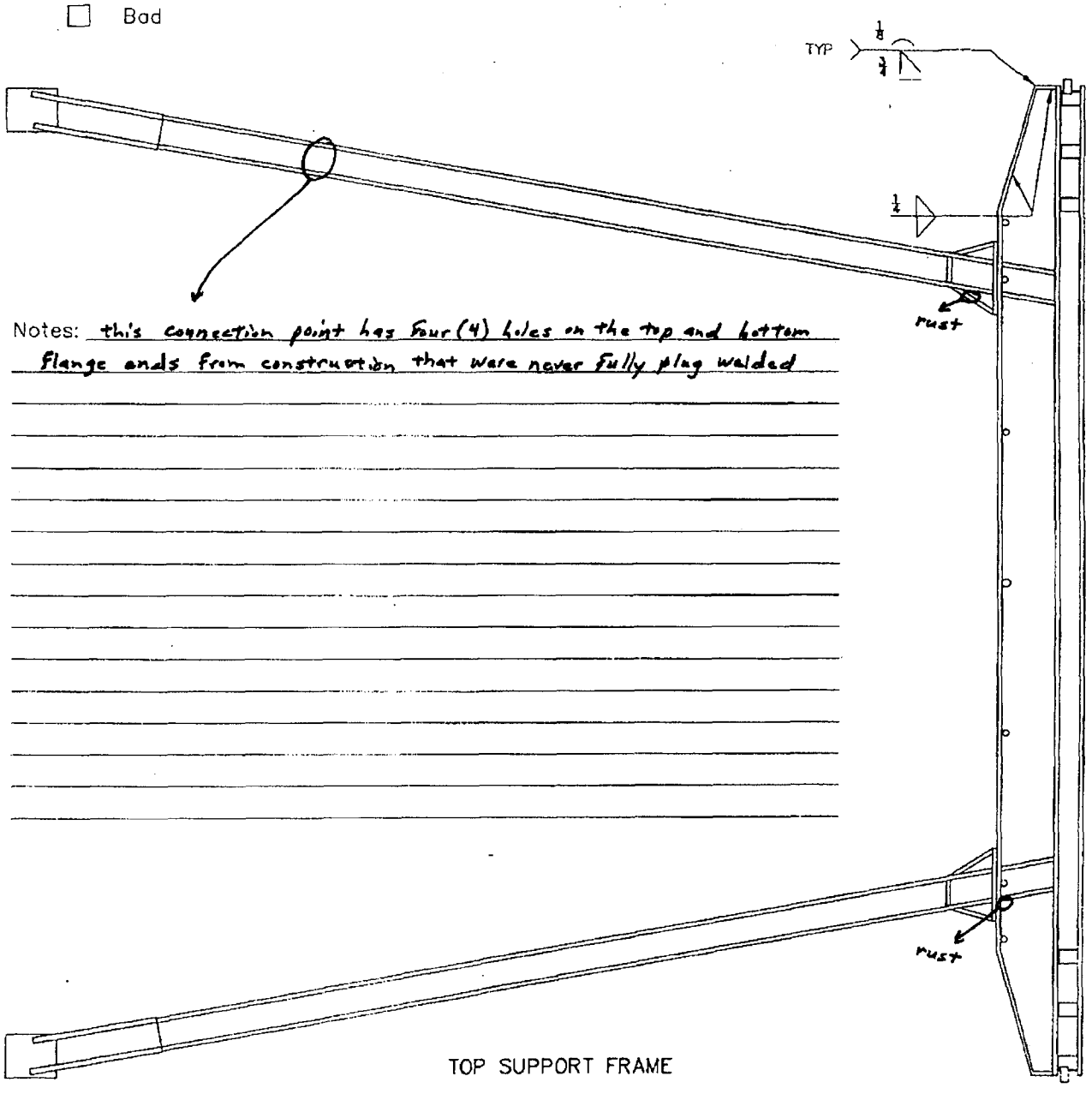

Notes: this connection point has four (4) holes on the top and bottom flange ends from construction that were never fully plug welded

TOP SUPPORT FRAME

Tennessee Valley Authority
Tellico Spillway Gate Inspection

Gate: 4

MIDDLE SUPPORT FRAME Inspection Team: Travis Simpson Date: 11/29/08
Weather: clear and cool Sheet: 4

☑ Paint Condition :
- ☐ Good
- ☑ Fair
- ☐ Bad

☑ Drain Holes clear
☑ Standing Water none
☑ Debris minor

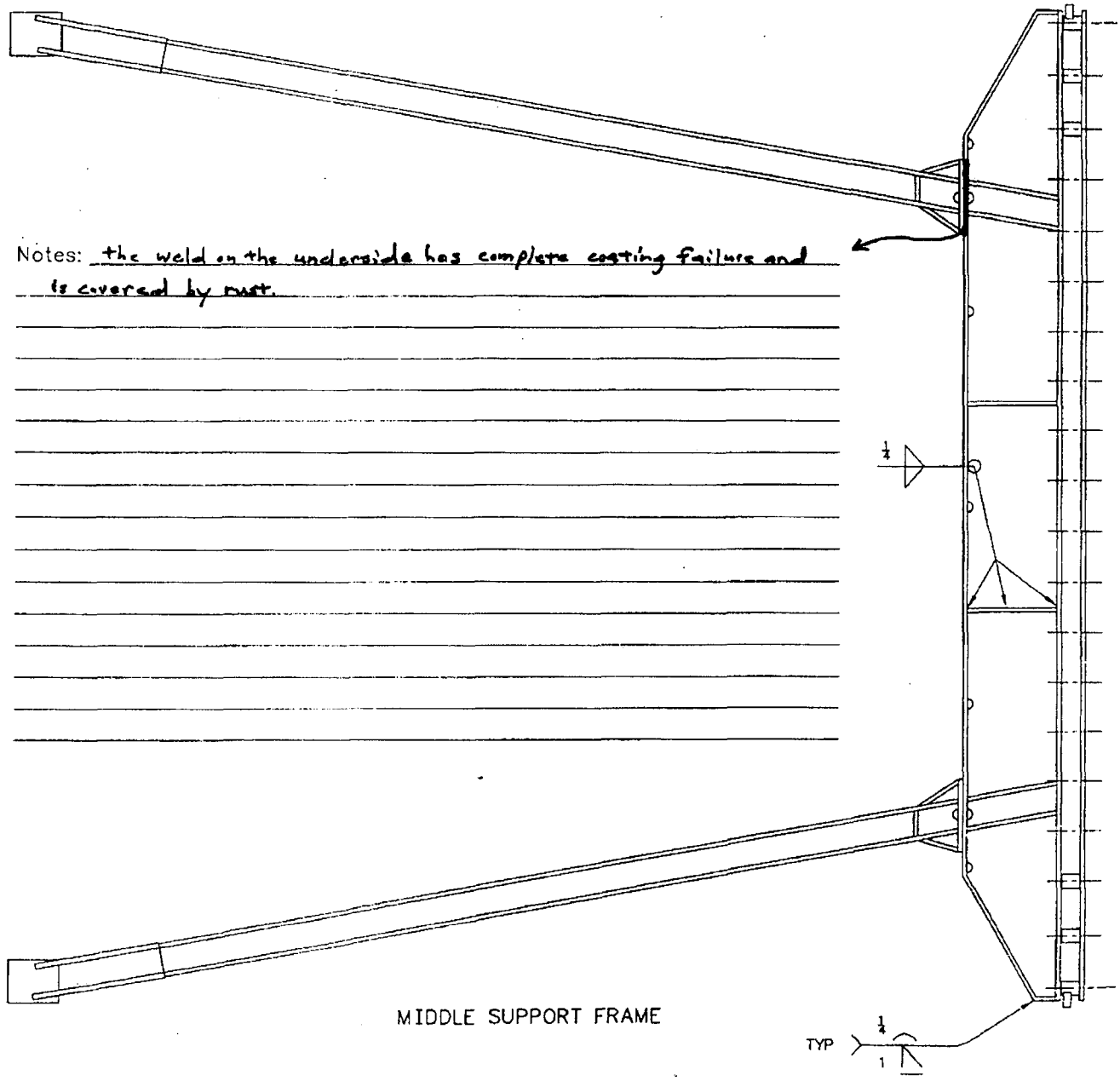

Notes: the weld on the underside has complete coating failure and is covered by rust.

MIDDLE SUPPORT FRAME

Tennessee Valley Authority
Tellico Spillway Gate Inspection

Gate: 2

BOTTOM SUPPORT FRAME Inspection Team: Travis Simpson Date: 11/29/08

Weather: clear and cool Sheet: 5

☑ Paint Condition :

- ☐ Good
- ☑ Fair
- ☐ Bad

☑ Drain Holes clear

☑ Standing Water none (after drained)

☑ Debris minor

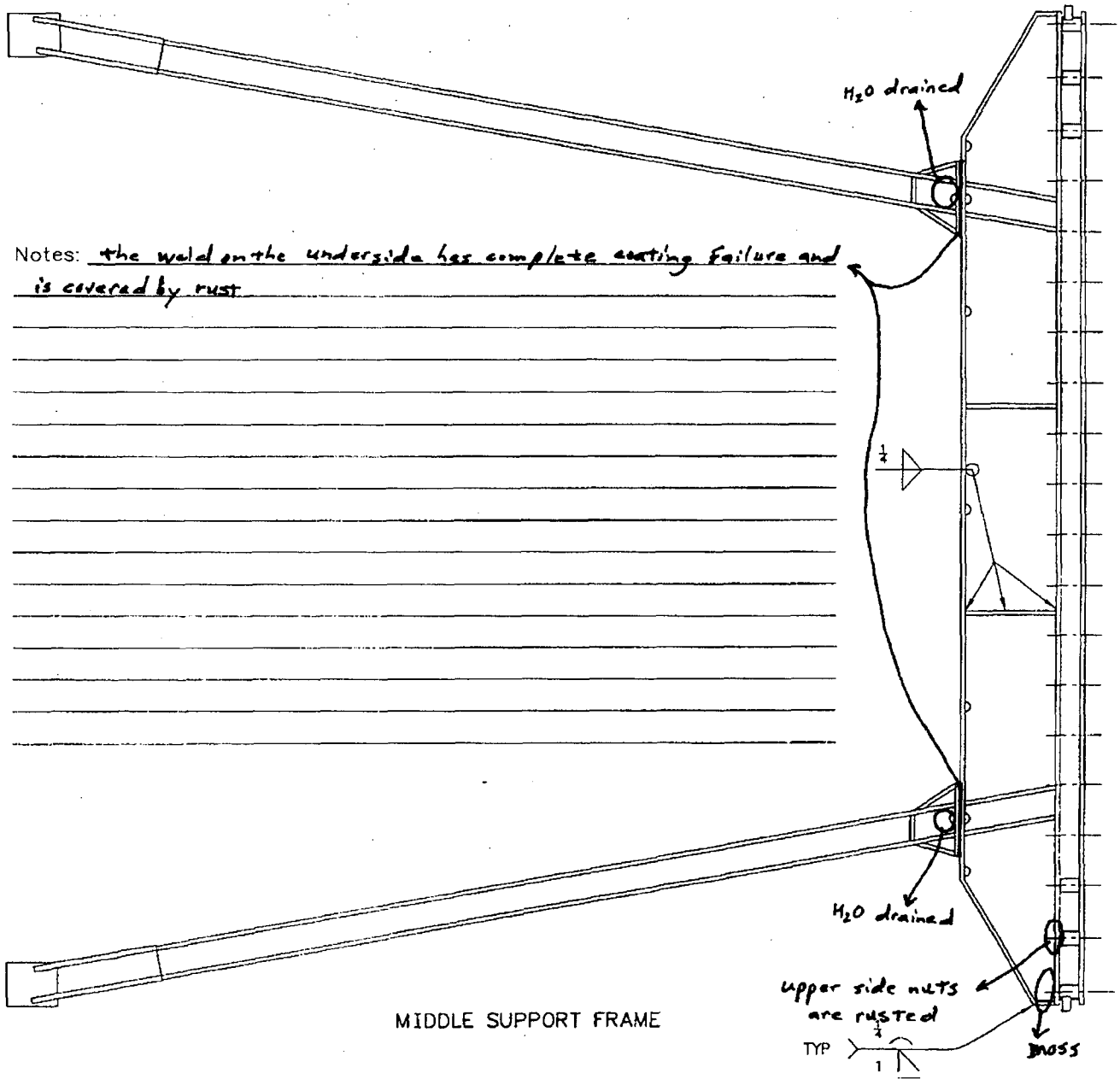

Notes: the weld on the underside has complete coating failure and is covered by rust

MIDDLE SUPPORT FRAME

Tennessee Valley Authority
Tellico Spillway Gate Inspection

Gate: 2

(DOWNSTREAM) SKIN PLATE Inspection Team: Travis Simpson Date: 11/29/08

Weather: Clear and Cool Sheet: 6

Notes: (1) areas of major rust on the skin plate and in the bottom corners along the length of the entire bottom section. Mild to moderate rust is on and around the sekl nuts. The nuts at the connection points are moderately rusted.

☑ Paint Condition :

- ☐ Good
- ☑ Fair
- ☐ Bad

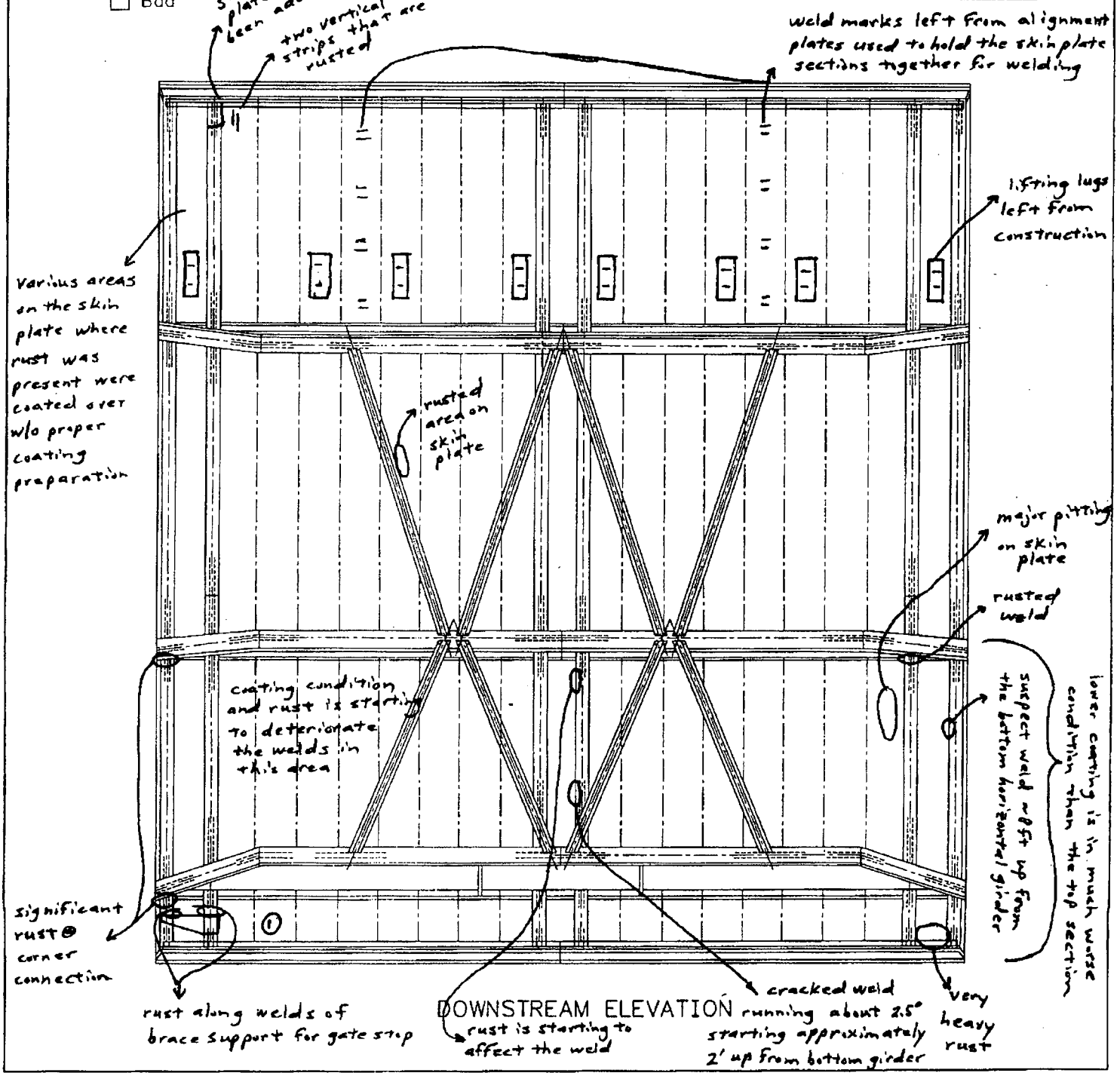

DOWNSTREAM ELEVATION

Tennessee Valley Authority
Tellico Spillway Gate Inspection

Gate: 2

(TRUNNION DETAILS) Inspection Team: Travis Simpson Date: 11/29/08

Weather: clear and cool Sheet: 7

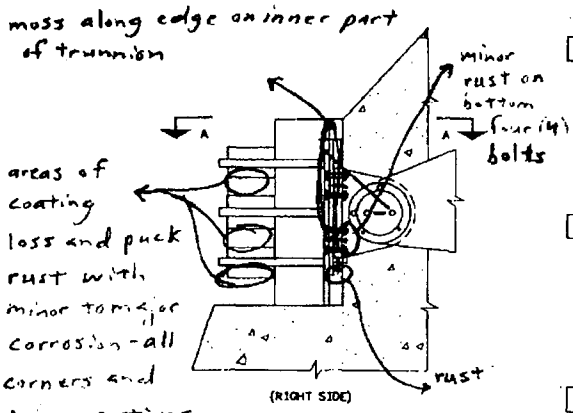

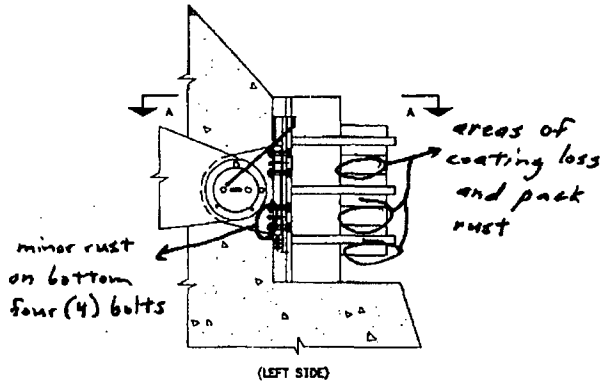

- [x] Paint Condition :
  - [x] Good
  - [ ] Fair
  - [ ] Bad
- [x] Anchor Rods :
  - [x] Good mild corrosion
  - [ ] Fair
  - [ ] Bad (rust)
- [x] Grease Line:
  - [x] Good
  - [ ] Fair
  - [ ] Bad
- [x] Trunnion Embed Condition:
  - [x] Cracked none
  - [x] Spalled none
  - [x] Satisfactory
- [x] Lock Plate good (note)
- [x] Drain Holes clear
- [x] Standing Water none
- [x] Debris minor

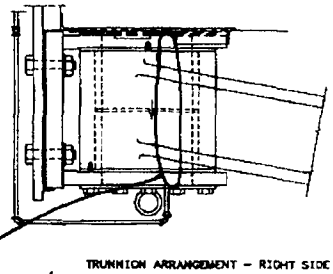

rust and 'burns' on bottom side from pin removal

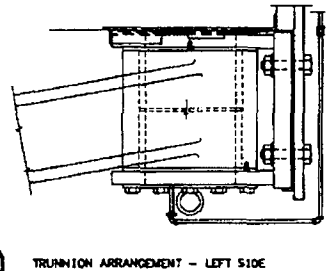

Notes: the inner lock plate holes have now been slotted

Tennessee Valley Authority
Tellico Spillway Gate Inspection

Gate: 2

(UPSTREAM) SKIN PLATE

Inspection Team: Travis Simpson

Date: 11/29/08

Weather: Clear and Cool

Sheet: 8

Notes: could not inspect due to headwater elevation

☒ Paint Condition : N/A

- ☐ Good
- ☐ Fair
- ☐ Bad

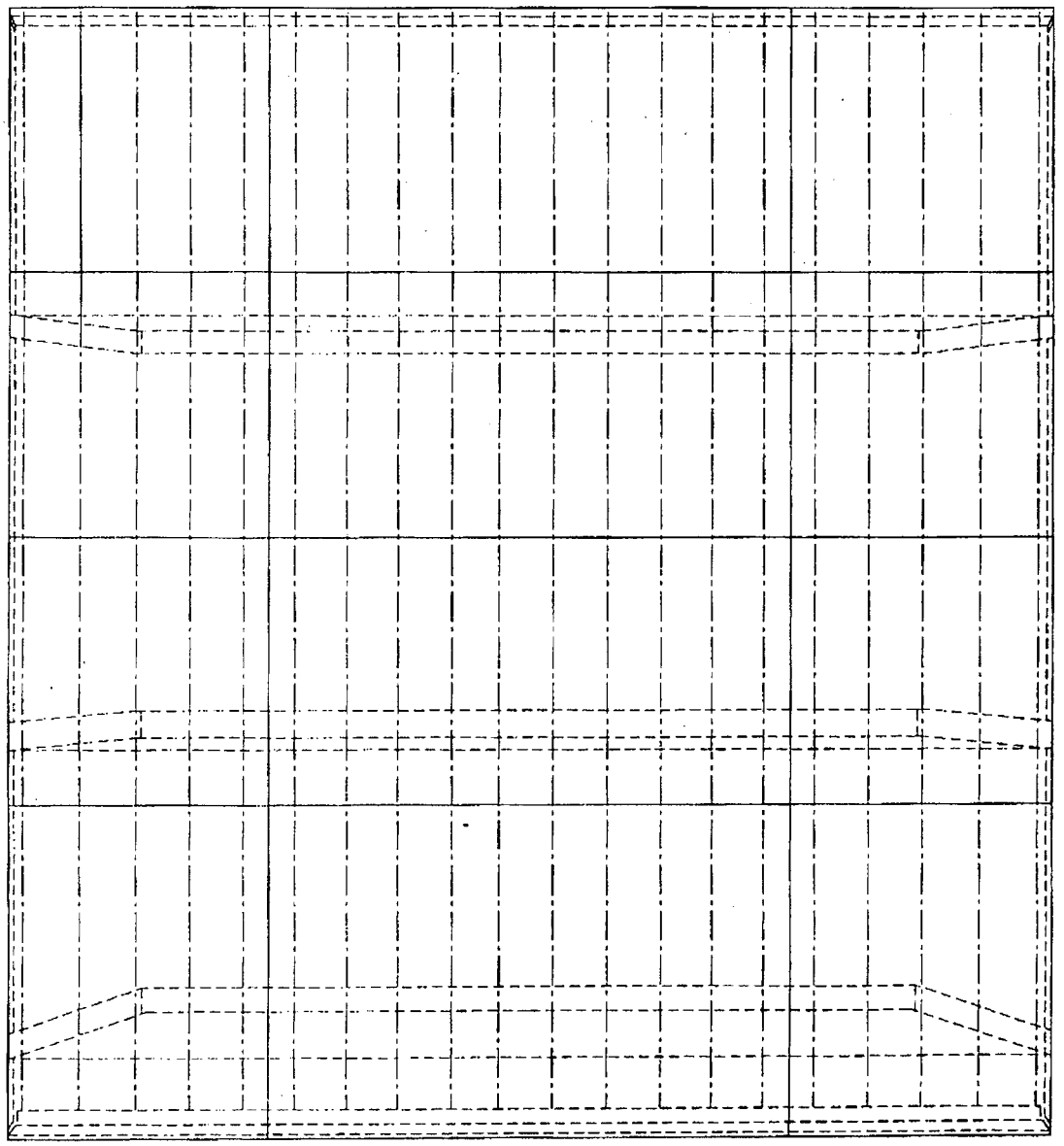

UPSTREAM ELEVATION

Tennessee Valley Authority
Tellico Spillway Gate Inspection

Gate: 3

RIGHT GATE ARM
(LOOKING DOWNSTREAM)

Inspection Team: Isaac Allen
Weather: clear and cool

Date: 11/29/08
Sheet: 1

☑ Paint Condition :
- ☑ Good
- ☐ Fair
- ☐ Bad

☑ Embed :
- ☑ Coating good
- ☑ Rubbing none
- ☑ Grout cracking
- ☑ Gate Stop see note

☒ Gate Seals : N/A

Notes:

☑ Gate Seal Bar :
- ☒ Bottom N/A
- ☑ Bolted Conn. areas of rust
- ☒ Side N/A
- ☑ Bolted Conn. good

☑ Standing Water none
☑ Debris minor

☒ Lifting Lug : N/A
- ☐ Good
- ☐ Fair
- ☐ Bad

DETAIL A
(Lifting Lug Detail)

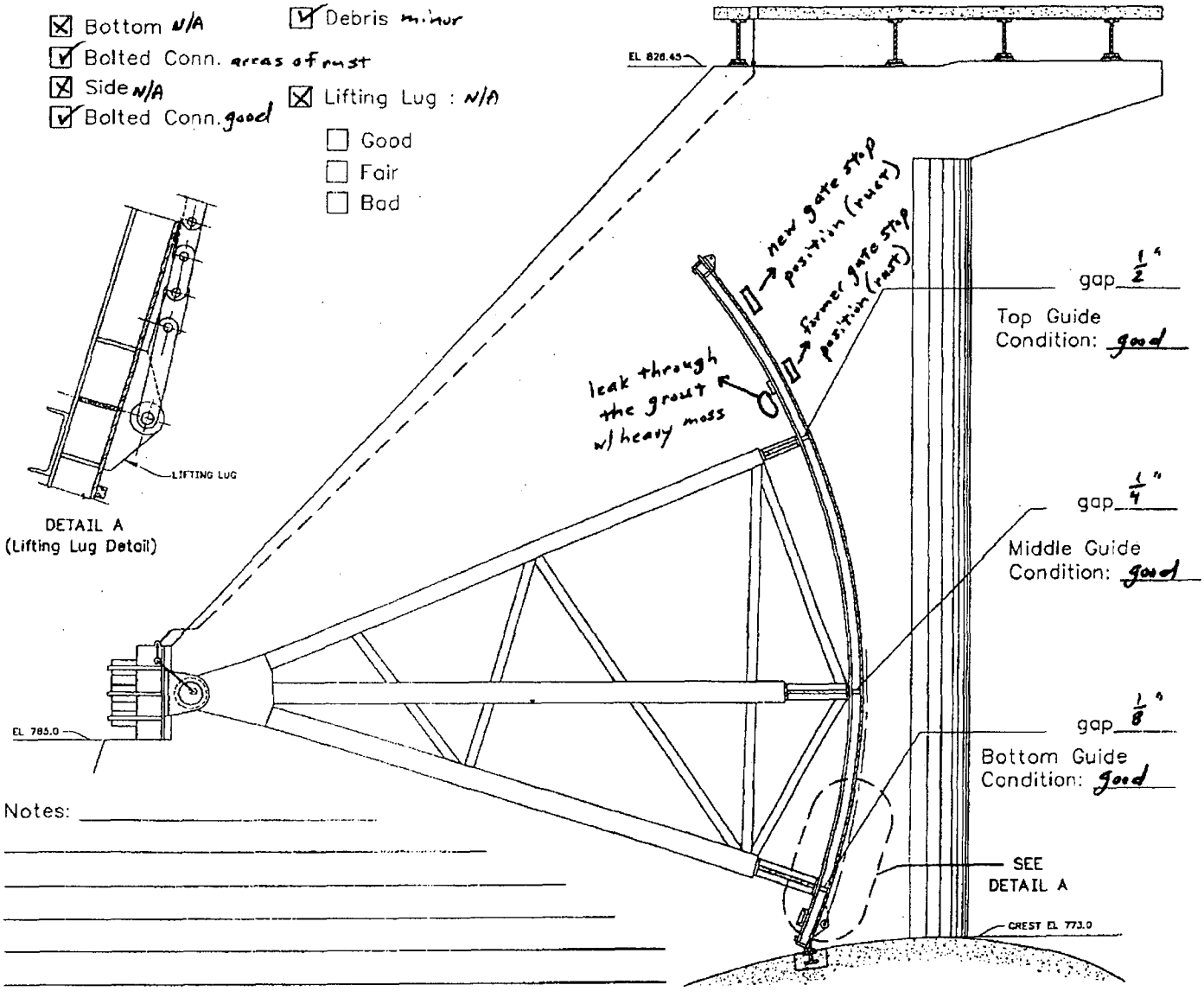

Notes:

Tennessee Valley Authority
Tellico Spillway Gate Inspection

Gate: 3

LEFT GATE ARM
(LOOKING DOWNSTREAM)

Inspection Team: Isaac Allen
Weather: clear and cool

Date: 11/29/08
Sheet: 2

Notes: _____

☑ Paint Condition : ☑ Good ☐ Fair ☐ Bad

☑ Embed : ☑ Coating good ☐ Bottom ☑ Rubbing none ☐ Right ☑ Grout good ☑ Gate Stop see note

☑ Gate Seal Bar : ☑ Standing Water none ☑ Debris minor

☒ Bottom N/A
☑ Bolted Conn. areas of rust
☒ Side N/A
☑ Bolted Conn. good

☒ Lifting Lug : N/A
☐ Good
☐ Fair
☐ Bad

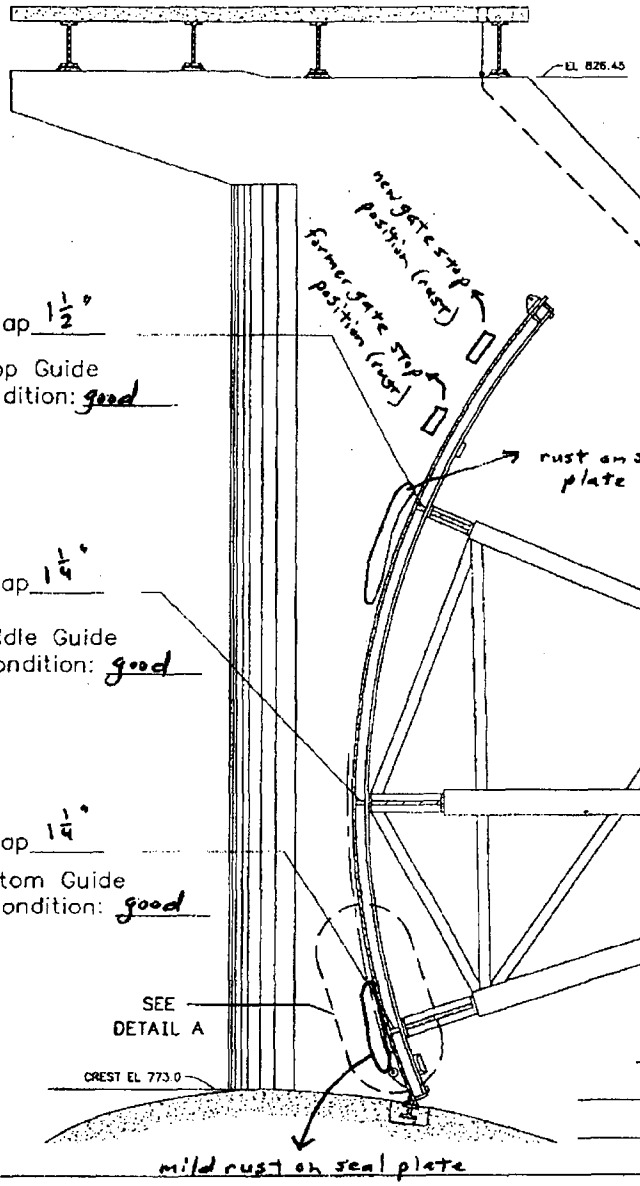

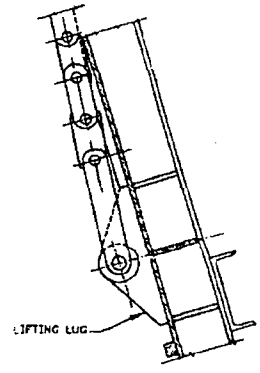

DETAIL A
(Lifting Lug Detail)

EL 785.0

Notes: _____

Tennessee Valley Authority
Tellico Spillway Gate Inspection

Gate: 3

TOP SUPPORT FRAME

Inspection Team: Isaac Allen

Date: 11/29/08

Weather: clear and cool

Sheet: 3

- [x] Paint Condition :
  - [x] Good
  - [ ] Fair
  - [ ] Bad
- [x] Drain Holes clear
- [x] Standing Water none
- [x] Debris minor

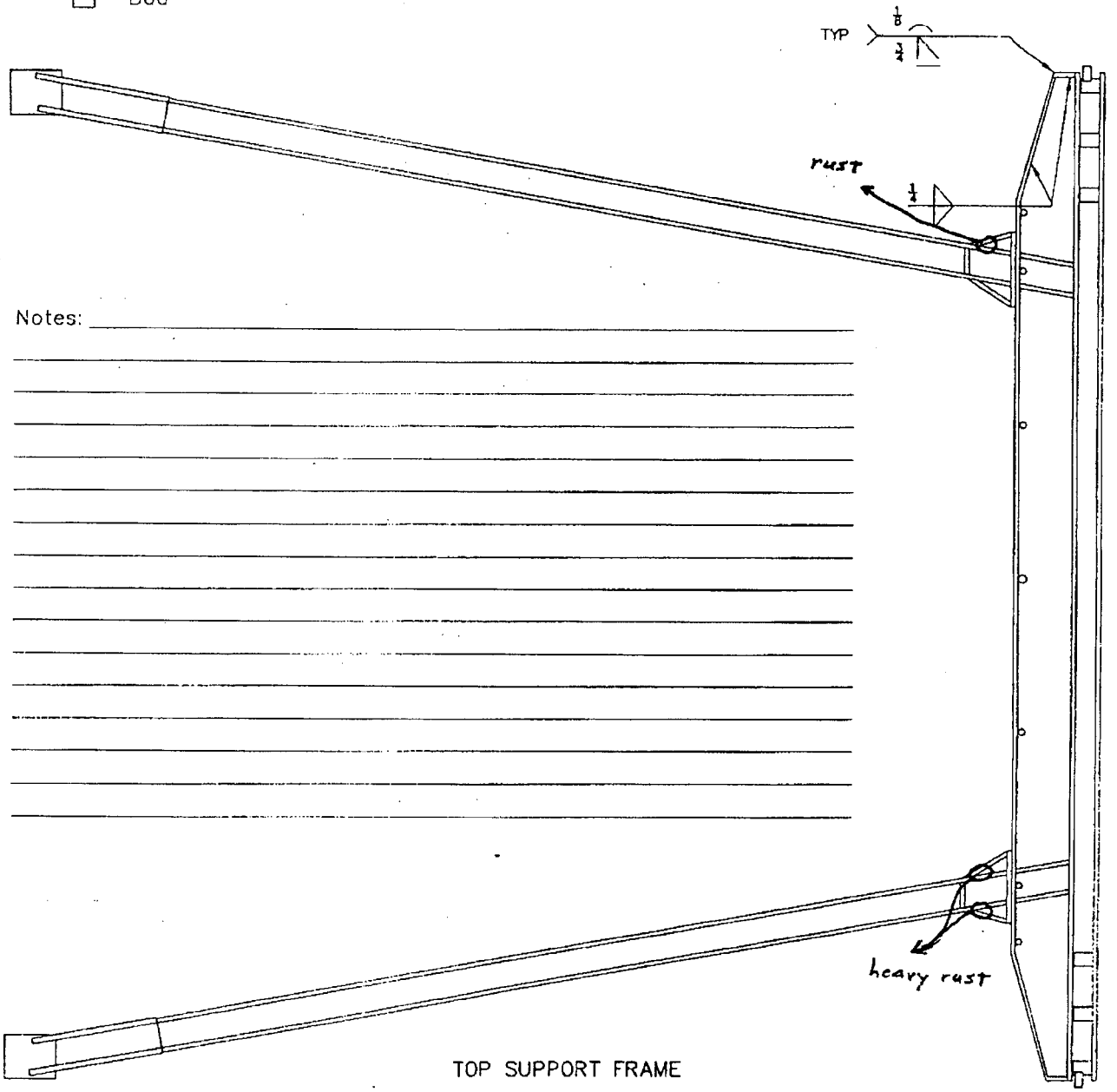

Notes:

TOP SUPPORT FRAME

Tennessee Valley Authority
Tellico Spillway Gate Inspection

Gate: 3

MIDDLE SUPPORT FRAME Inspection Team: Isaac Allen Date: 11/29/08

Weather: clear and cool Sheet: 4

☑ Paint Condition :

- ☑ Good
- ☐ Fair
- ☐ Bad

☑ Drain Holes clear

☑ Standing Water none

☑ Debris minor

Notes: _____

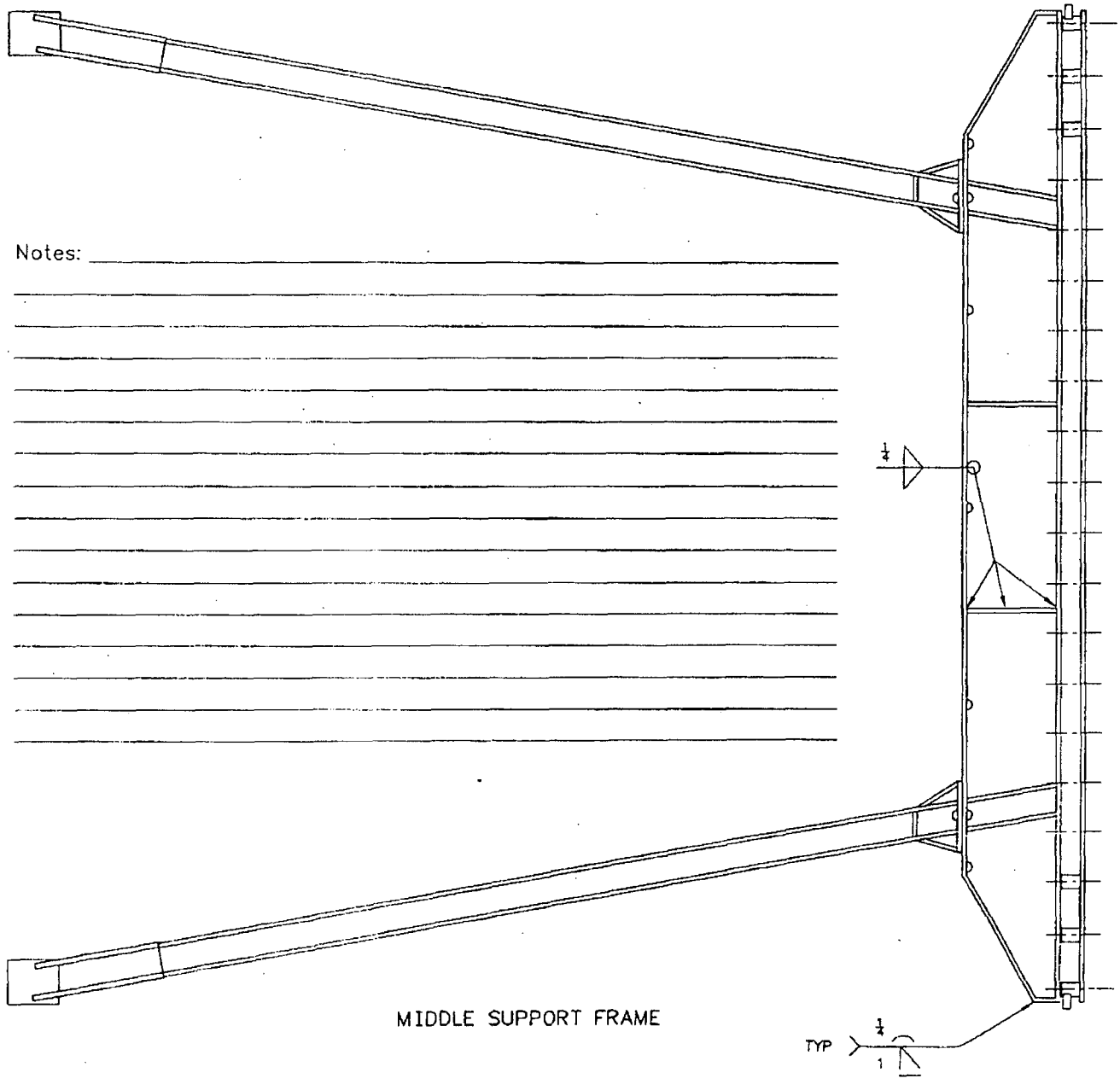

MIDDLE SUPPORT FRAME

Tennessee Valley Authority
Tellico Spillway Gate Inspection

Gate: 3

BOTTOM SUPPORT FRAME Inspection Team: Isaac Allen Date: 11/29/08

Weather: clear and cool Sheet: 5

☑ Paint Condition :

- ☑ Good
- ☐ Fair
- ☐ Bad

☑ Drain Holes clear

☑ Standing Water none

☑ Debris minor

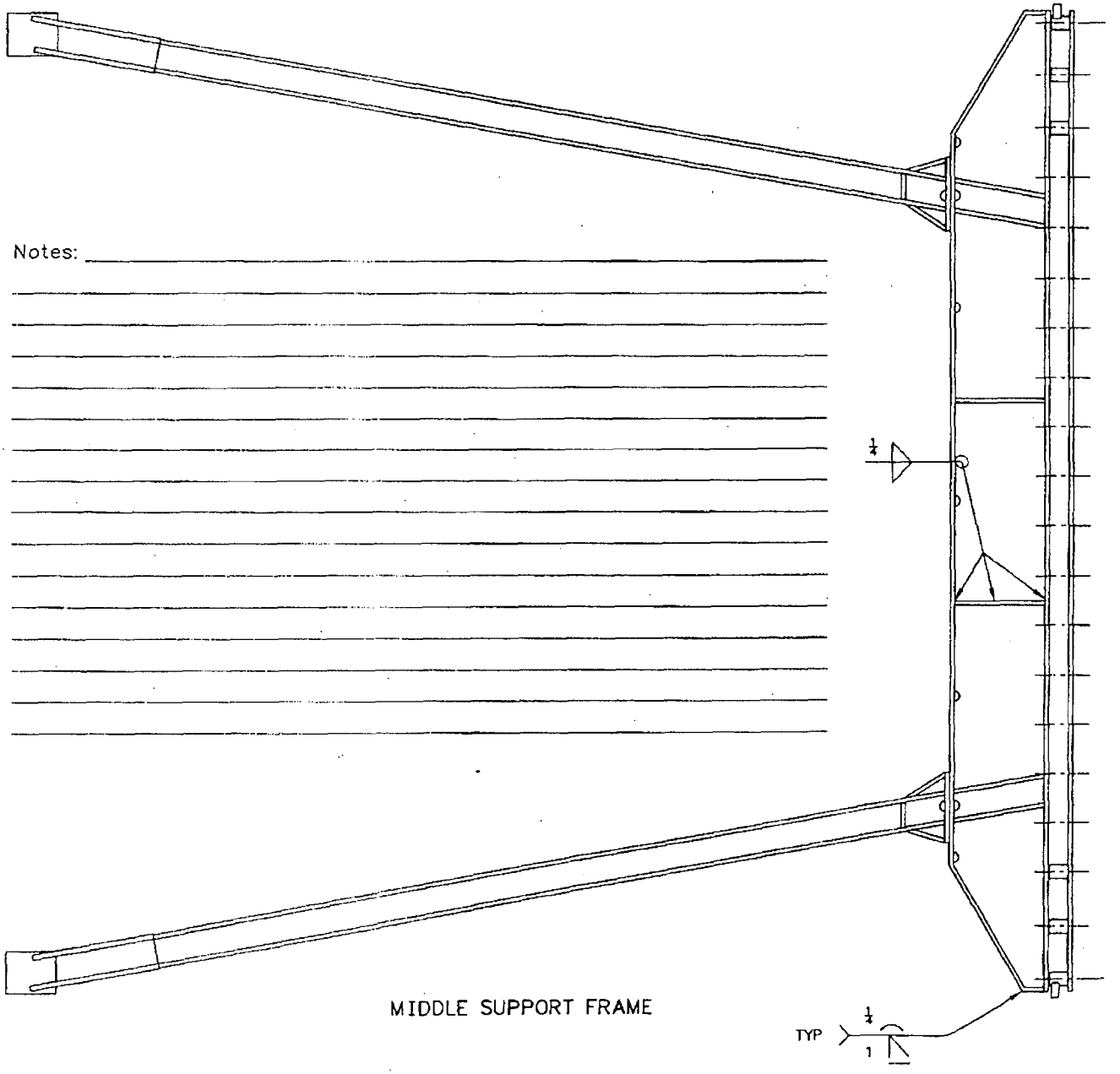

Notes:

Tennessee Valley Authority
Tellico Spillway Gate Inspection

Gate: 3

(DOWNSTREAM) SKIN PLATE Inspection Team: Isaac Allen Date: 11/29/08

Weather: clear and cool Sheet: 6

Notes: _____

☑ Paint Condition :

- ☑ Good
- ☐ Fair
- ☐ Bad

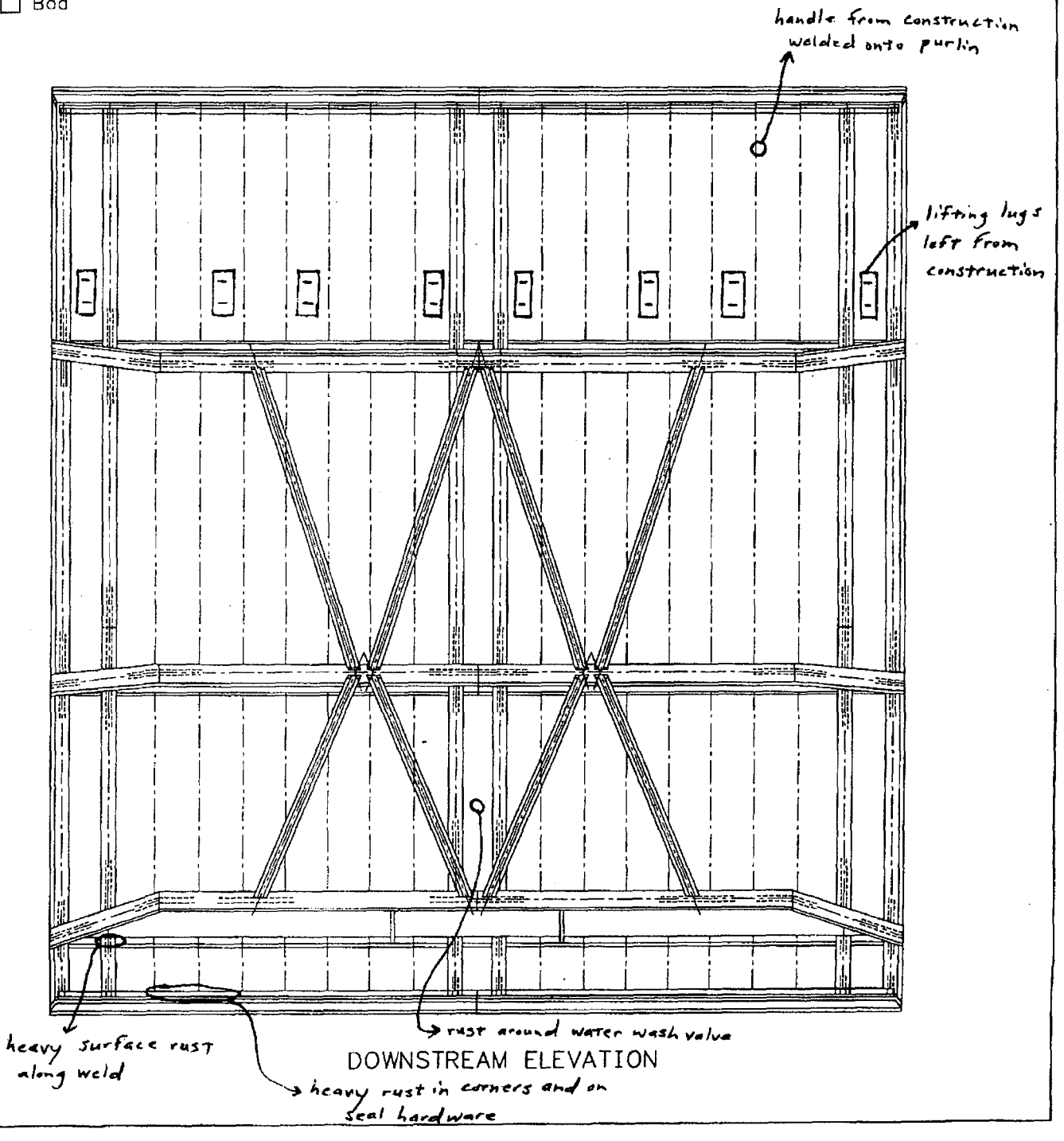

DOWNSTREAM ELEVATION

Tennessee Valley Authority
Tellico Spillway Gate Inspection

Gate: 3

(TRUNNION DETAILS) Inspection Team: Isaac Allen Date: 11/29/03

Weather: clear and cool Sheet: 7

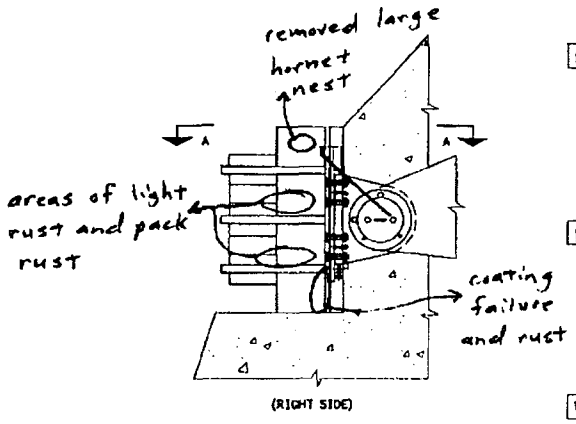

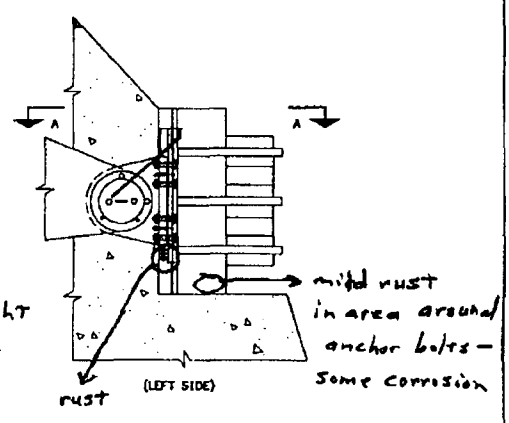

- [x] Paint Condition :
  - [x] Good
  - [ ] Fair
  - [ ] Bad
- [x] Anchor Rods :
  - [x] Good left side only
  - [x] Fair thickness is good but covered in rust on right side
  - [ ] Bad (rust)
- [x] Grease Line:
  - [x] Good
  - [ ] Fair
  - [ ] Bad
- [x] Trunnion Embed Condition:
  - [x] Cracked
  - [x] Spalled
  - [x] Satisfactory
- [x] Lock Plate good
- [x] Drain Holes clear
- [x] Standing Water none
- [x] Debris minor

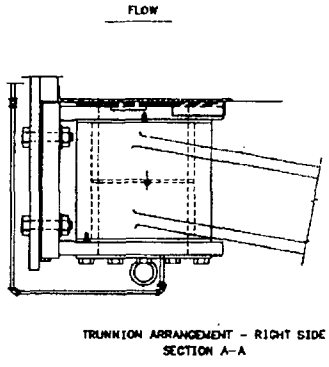

TRUNNION ARRANGEMENT – RIGHT SIDE
SECTION A–A

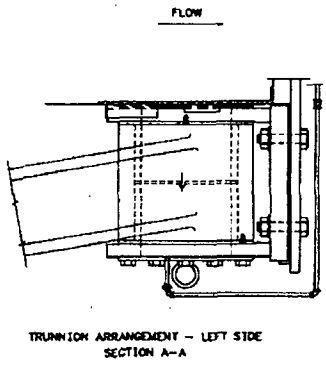

TRUNNION ARRANGEMENT – LEFT SIDE
SECTION A–A

Notes:

Tennessee Valley Authority
Tellico Spillway Gate Inspection

Gate: 3

(UPSTREAM) SKIN PLATE

Inspection Team: Isaac Allen

Date: 11/29/07

Weather: clear and cool

Sheet: 8

Notes: could not inspect due to headwater elevation

☒ Paint Condition : N/A

- ☐ Good
- ☐ Fair
- ☐ Bad

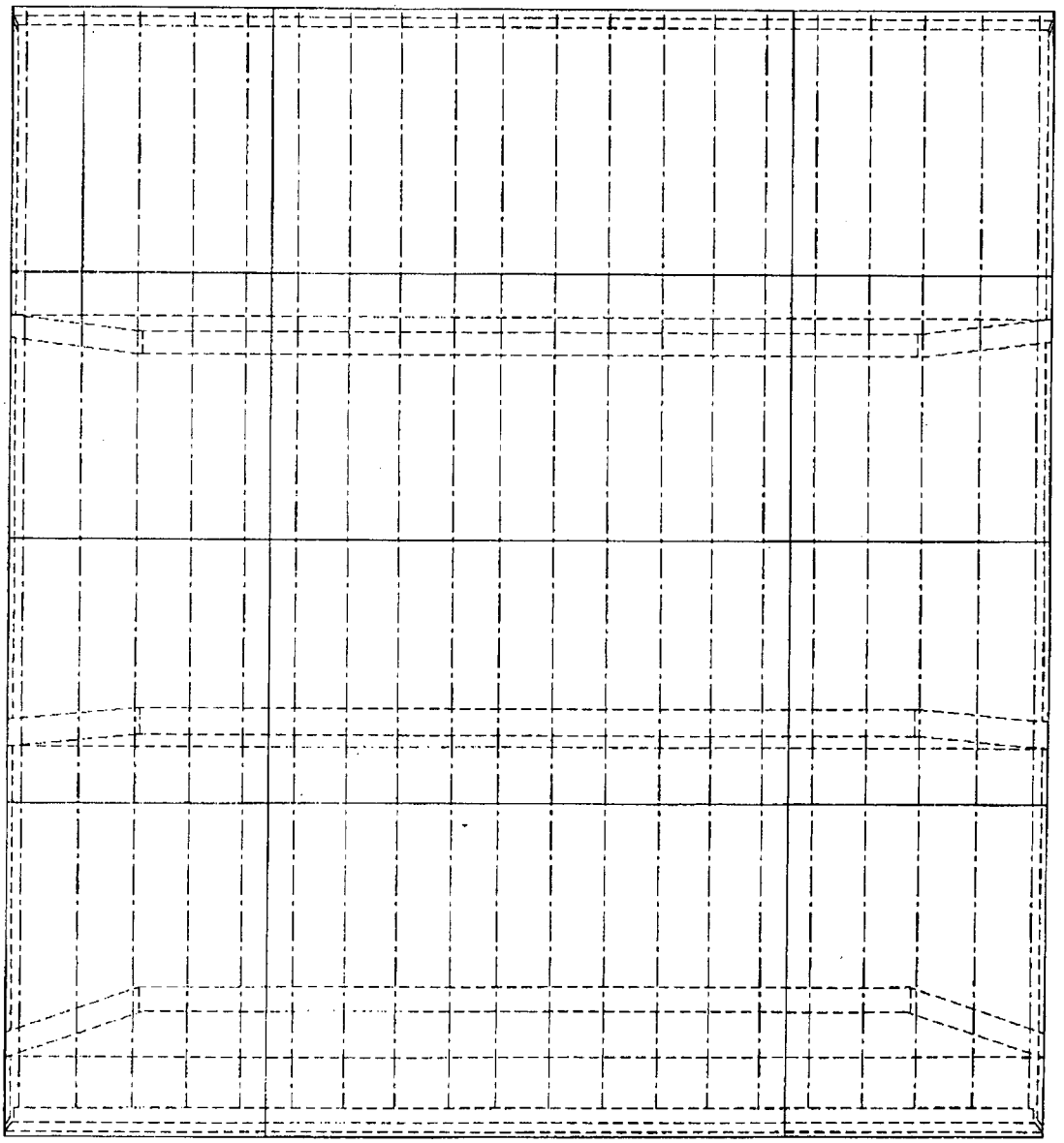

UPSTREAM ELEVATION

UNITED STATES DEPARTMENT OF THE INTERIOR

BUREAU OF RECLAMATION

DESIGN OF SMALL DAMS

Attachment E29 Cover Page only. This document available in public domain. Relevant pages of this document supplied in Appendix C of Calculation.

A WATER RESOURCES TECHNICAL PUBLICATION

TVA 10697 (OE 4-85) OE CALCULATIONS

TITLE: EMERGENCY SPILLWAY AT SADDLE DAM 1			PLANT/UNIT: TELLICO
PREPARING ORGANIZATION: HEP	KEY NOUNS (Consult RIMS DESCRIPTORS LIST): OGEE SPILLWAY - APRON		
BRANCH/PROJECT IDENTIFIERS	Each time these calculations are issued, preparers must ensure that the original (RO) RIMS accession number is filled in.		
	Rev	(for RIMS' use) (10)	RIMS accession number
	RO	880818C0057	B66 '88 0811 005
APPLICABLE DESIGN DOCUMENT(S)	R _		
	R _		
SAR SECTION(S) / UNID SYSTEM(S)	R _		

Revision 0	R1	R2	R3
ECN No. (Indicate if Not Applicable)			
Prepared: H. Deal			
Checked: E. L. Todd			
Reviewed: Russell D. Myers			
Approved: Earl J. Zechman			
Date: 8-11-88			
List all pages added by this revision.			
List all pages deleted of this revision.			
List all pages changed by this revision.			

Use form TVA 10634 if more room required.

Statement of Problem

Design spillway to replace Saddle Dam 1 at Tellico to permit PMF rainfall to pass - thus maintaining a maximum high water that is within limits of tolerance.

Abstract

cc: RIMS, SL26 C-K

TVA

Title:

REVISION LOG

Revision No.	DESCRIPTION OF REVISION	Date Approved

TVA 489 (EN DES-11-76)

SHEET 1 OF 8

Spillway Rating — Tellico

COMPUTED HD DATE 3-20-86

CHECKED ELT DATE 3-20-86

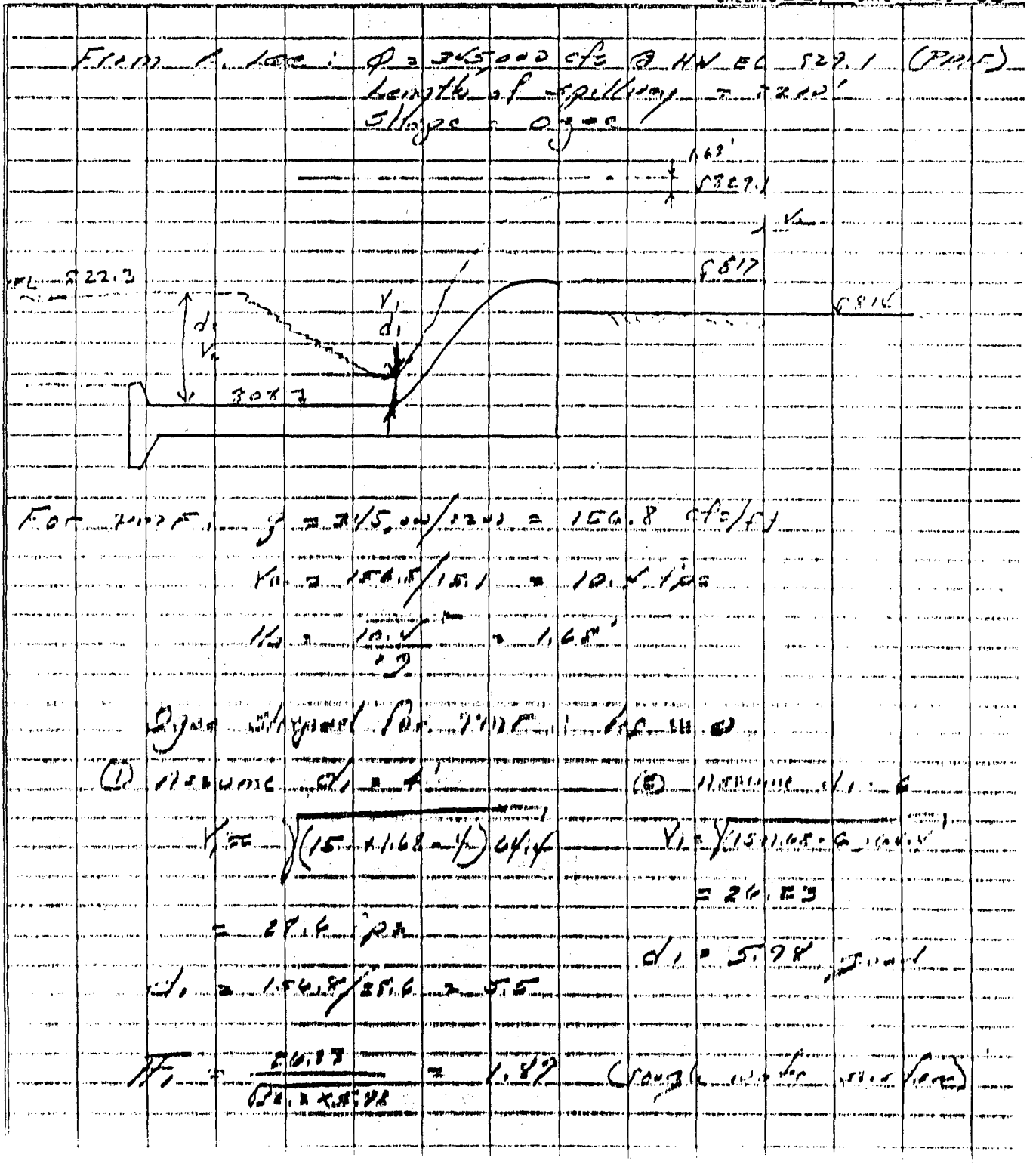

TVA 489 (EN DES-11-76)

SHEET 2 OF 8

SPILLWAY APRON

Tellico

COMPUTED HD DATE

CHECKED ELT DATE

$\frac{D_2}{D_1} = 2.2$

$D_2 = 2.2 \times 4.5 = 9.9'$ = EL 808 + 9.9 = 817.9

Since D_2 EL is less than TW EL 822.3

Jet will tend to swing out ∴ use TW to set apron length.

$\frac{L_1}{D_2} = 4.5$

$L_1 = 4.2 \times 14.3 \approx 60$

Since this is not an operating spillway, TW rating curve for this large a flood is at best approximate, would take considerable excavation to provide a lower spillway apron, downstream erosion will be minimum due to high TW & flat terrain, and the compromising of the advantage of using roller compacted concrete by using baffle & chute blocks, the length of apron will be set by assuming d_2 = TW depth see calcs of 2-3-86

TVA 48 (EN DES 11-76)

SHEET 3 OF 8

Tellico

Length of Spillway Apron @ Saddle dam #1

COMPUTED HD DATE 2-3-86

CHECKED ELT DATE 2-3-86

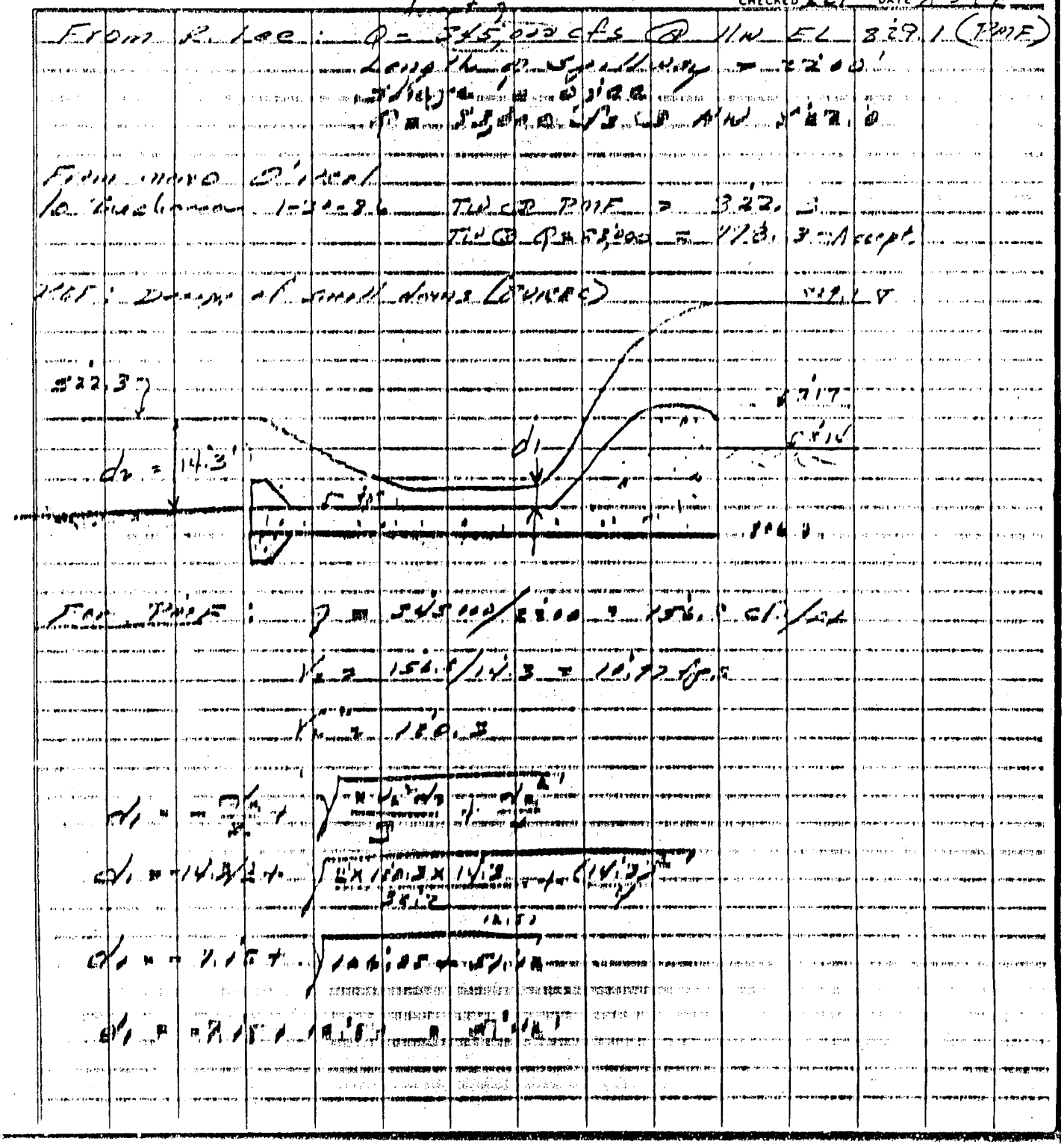

$V_1 = \frac{156.8}{5.42} = 28.93$ fps

$F = \frac{28.93}{\sqrt{32.2 \times 5.42}} = 2.19$

$\frac{L_j}{d_2} = 4.5$; $L_j = 4.5 \times 14.3 = 64.4'$

For $q = 83{,}000$:

$q = 83{,}000 / 2200 = 37.73$ cfs/ft

$V_1 \approx \sqrt{9 \times 64.4} \approx 24$ fps

Assumed

$d_1 \approx \frac{37.73}{24} \approx 1.57'$

$F = \frac{24}{\sqrt{32.2 \times 1.57}} = 3.35$

$d_2 = 1.57 \times 0.5 \left(\sqrt{8(3.35)^2 + 1} - 1 \right)$ (5.61)

$d_2 = 6.76'$

$\frac{L_j}{d_2} = 5.5$; $L_j = 5.5 \times 6.76 = 37.2'$

Conclusion:

Length of approx req'd for jump is approx 60'

EMERGENCY SPILLWAY FOR
SADDLE DAM #1

TELLICO PROJECT

COMPUTED CDW DATE 2-6-86
CHECKED ELT DATE 3-3-86

DESIGN DATA:

HEADWATER EL 829.1
SPILLWAY CREST EL 817.0
APRON EL 808.0

USING CREAGER'S EQUATION FOR OGEE SPILLWAY

a.) UPSTREAM OF CREST CURVE

Ignore approach losses

$$Y = \frac{14' X^3}{3 H^2} \qquad h = 829.1 - 817.0 = 12.1$$

$$\therefore \quad Y = \frac{14' X^3}{3 (12.1)^2} = \frac{X^3}{31.4}$$

Distance from upstream face to crest line = 0.3' H
= 3.63 FT

b) DOWNSTREAM OF CREST CURVE

$$Y = \frac{0.5' X^{1.8}}{H^{0.8}}$$

$$\therefore \quad Y = \frac{0.5' X^{1.8}}{(12.1)^{0.8}} = \frac{X^{1.8}}{14.7}$$

EMERGENCY SPILLWAY FOR
SADDLE DAM #1

TELLICO PROJECT

COMPUTED EDW DATE

CHECKED ELT DATE 3-3-86

UPSTREAM CURVE $y = \frac{x^3}{31.4}$

x	y
0	0
2	0.25
(crest) 3.63	1.52

DOWNSTREAM CURVE $y = \frac{x^{1.8}}{14.7}$

x	y
0	0
2	0.24
4	0.82
6	1.71
8	2.87
10	4.29
12	5.96
14	7.87
15	8.91
(apply) 15.00	9.0

Total curve length = 15.00 + 3.63 = 18.72'

Emerg. Spillway @ Saddle Dam 1

PMF HW @ Tellico = 828.4 (From Youngs Estimate)
We need additional splwy capacity of 2200± ft ogee crest @ El 817 installed at saddle dam 1

$H = 828.4 - 817 = 11.4'$ Prelim info. from Newton

$Q = \underbrace{3.9}_{\text{assumed}} \times 2200 \times 11.4^{1.5} = 330{,}000 \text{ cfs} \approx 335{,}000$

∴ Assume additional Q = 335,000 cfs
Assume V = 8 fps (max from SCS pub. for grassed slopes)

for Q = VA
Length req'd to restrict velocity to 8 fps = [illegible] = [illegible] ft

From above not practical to limit velocity to 8 fps with current saddle dam 1 scheme.

ELT

TVA 480 (EN DES 11-74)

Ft Loudoun/Tellico Dam Safety — SHEET 8 OF 8

Proposed weir section for Saddle Dam 1. — Tellico proj

COMPUTED ELT DATE 3-4-86

CHECKED DATE

Trans. ASCE, Vol. 22, pp. 190-210, 1957

AMERICAN SOCIETY OF CIVIL ENGINEERS

Founded November 5, 1852

TRANSACTIONS

Paper No. 2855

DISCHARGE COEFFICIENTS FOR SPILLWAYS AT TVA DAMS

By Kenneth W. Kirkpatrick,[1] A. M. ASCE

Synopsis

Spillway ratings derived from model studies have been used in the preparation of spillway rating tables for the Tennessee Valley Authority dams. As a result of these studies, discharge coefficients for eleven of the Tennessee Valley Authority dams are given in this paper. Coefficients for both submerged and free discharge conditions are presented for discharges over standard spillway crests, irregular spillway crests, and a vertical-lift spillway gate. Discharge coefficients for Tainter gates placed on curved spillway crests are also given for various gate openings under free discharge conditions. In addition, data on the effect of model scale on the discharge coefficient and the effect of closing adjacent spillway bays and gates are presented. The coefficient relationships are shown in a form that may be used by designers as a guide in making determinations of the discharges for future spillways.

Notation

The letter symbols adopted for use in this paper are defined where they first appear, in the illustrations or in the text, and are arranged alphabetically, for convenience of reference, in the Appendix.

Introduction

The Tennessee Valley Authority (TVA) operates a system of nine dams on the Tennessee River and twenty-three on the tributary rivers. The successful operation of such a system requires accurate discharge ratings for each structure. Although enough water is seldom available to make complete ratings for most spillways from measurements conducted on the prototype structure, ratings can be determined from scale model tests. Therefore, the necessary ratings for the TVA spillways have been determined by this means. Model studies have been made at the TVA Hydraulic Laboratory at Norris, Tenn.,

Note.—Published, essentially as printed here, in February, 1955, as *Proceedings-Separate No. 626*. Positions and titles given are those in effect when the paper was approved for publication in *Transactions*.

[1] Hydr. Engr., Hydr. Lab., Tennessee Valley Authority, Norris, Tenn.

on nine different spillway crest shapes equipped with three types of control gates.

Seven of the nine crests were curved sections which approximated the shape of the lower nappe of a sharp-crested weir. The other two crests were flat. The two flat-crested weirs and one of the curved crests were equipped with double-leaf vertical lift gates. Five of the curved crests were equipped with Tainter gates and the other with vertical lift gates.

Data Presented.—Data are presented for the following conditions: (1) Free, ungated flow through a series of spillway bays; (2) submerged, ungated flow through a series of spillway bays; (3) free, ungated flow through a series of spillway bays, with adjacent bays fully open or closed; (4) free flow over a vertical lift gate; (5) submerged flow over a vertical lift gate; (6) flow under a series of Tainter gates set with equal openings; and (7) flow under a series of Tainter gates with adjacent gates closed.

Data are also presented to show the effect of model scale for the condition of free, ungated flow through a series of spillway bays.

General Model Arrangement.—The models were tested in flumes either 3.5 ft wide or 8 ft wide. Models installed in the smaller flume usually consisted of a reproduction of three of the prototype spillway bays. In the larger flume five or six spillway bays were reproduced. Each of these flumes was provided with glass panels for observation purposes. The models placed in the larger flume were constructed at scale ratios of from 1:28.72 to 1:50 with a ratio of approximately 1:35 generally used. Those tested in the smaller flume were built at scale ratios of 1:50, 1:100, and 1:200.

The models were usually provided with concrete crests and concrete piers to insure dimensional stability. Half piers were constructed on the ends of each model. If the model did not completely fill the flume one side was placed against the glass side of the flume and the other against a false wall. The river bed upstream and downstream from the model was reproduced at the elevation of the prototype river bed. Suitable baffling was provided to obtain a uniform distribution of flow in the spillway approach channel. The tailwater level was controlled at the end of the flumes by means of slat gates. Model discharges were determined from readings of a carefully calibrated diaphragm orifice located in the water supply line.

Headwater heights were measured at two piezometers at distances equal to approximately 5 and 8 times the design head upstream from the spillway crest. Tailwater heights were obtained at 2 piezometers at distances equal to approximately 9 and 12 times the design head downstream from the spillway crest—in all cases, sufficiently far enough downstream to eliminate the effect of the spillway apron.

In most studies the headwater and tailwater levels were determined by means of hook gages reading to 0.001 ft. For the 1/200-scale model the heads were measured with a micrometer point gage reading to 0.0001 ft.

Discharge Equations.—The model data have been reduced by the use of two commonly accepted discharge equations. For both free and submerged flow over a spillway crest the equation,

$$Q = C\,L\,H^{3/2} \qquad (1)$$

was used, in which Q is the discharge in cubic feet per second, C is the coefficient of discharge determined from the model tests, L is the length of the crest, and H is the total head as shown in Fig. 1(*a*). Use was made of the same equation in the reduction of the data for free and submerged flows over a vertical gate with D, H, d, and P (Fig. 1(*a*)) being measured from the top of the gate.

For flow under a gate the equation for a rectangular orifice under low head,

$$Q = C\,L\,[H^{3/2} - (D_1 + h)^{3/2}] \quad \ldots\ldots\ldots\ldots\ldots\ldots\ldots\ldots (2)$$

was used, in which D_1 is the depth of water to the bottom of the gate as defined in Fig. 1(*b*) and h is the approach velocity head.

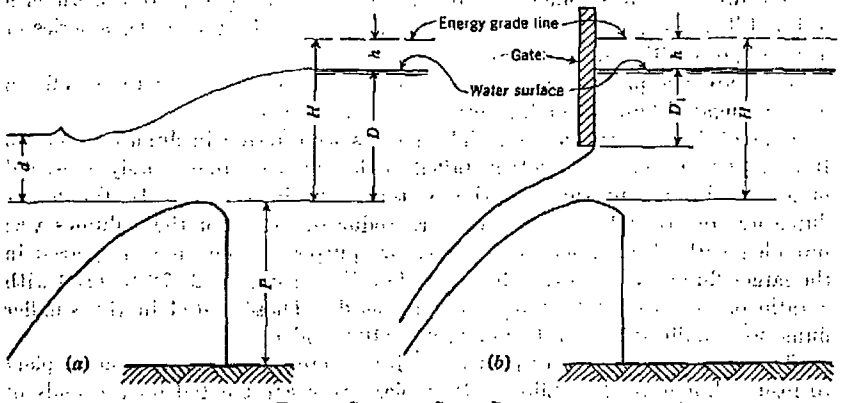

FIG. 1.—SPILLWAY-CREST DIAGRAM

FREE-DISCHARGE COEFFICIENTS, FLOW OVER SPILLWAY CRESTS

It is common practice for engineers to design spillway crests to approximate closely the shape of the lower portion of a jet issuing from a sharp-crested weir, and this type of crest is designated a standard crest.[2] Because the shape of the jet changes with the head on the weir, some particular head must be used for each design. This head for which a particular crest is designed is termed the design head. At this head, pressures approximating atmospheric pressure are developed at the spillway surface. At smaller heads, pressures are greater than atmospheric. Seven of the nine TVA crests for which data are available approximate standard crests in shape whereas the other two crests, which are flat, do *not*. Fig. 2 shows the basic details and dimensions of each of these crests. Fig. 3 presents the coefficient data obtained on the crests of Fig. 2. Pertinent design data concerning each crest, together with the scale to which each was modeled, appear in Table 1. Eleven spillways are also listed in Table 1. Two pairs of these, the Ocoee No. 3-Apalachia set, and the Douglas-Watts Bar set, both in Tennessee, have crest shapes that are identical within the pair but which were tested for different values of the approach depth, P.

[2] "Hydroelectric Handbook," by W. P. Creager and J. D. Justin, John Wiley & Sons, Inc., New York, N. Y., 2d Ed., 1950.

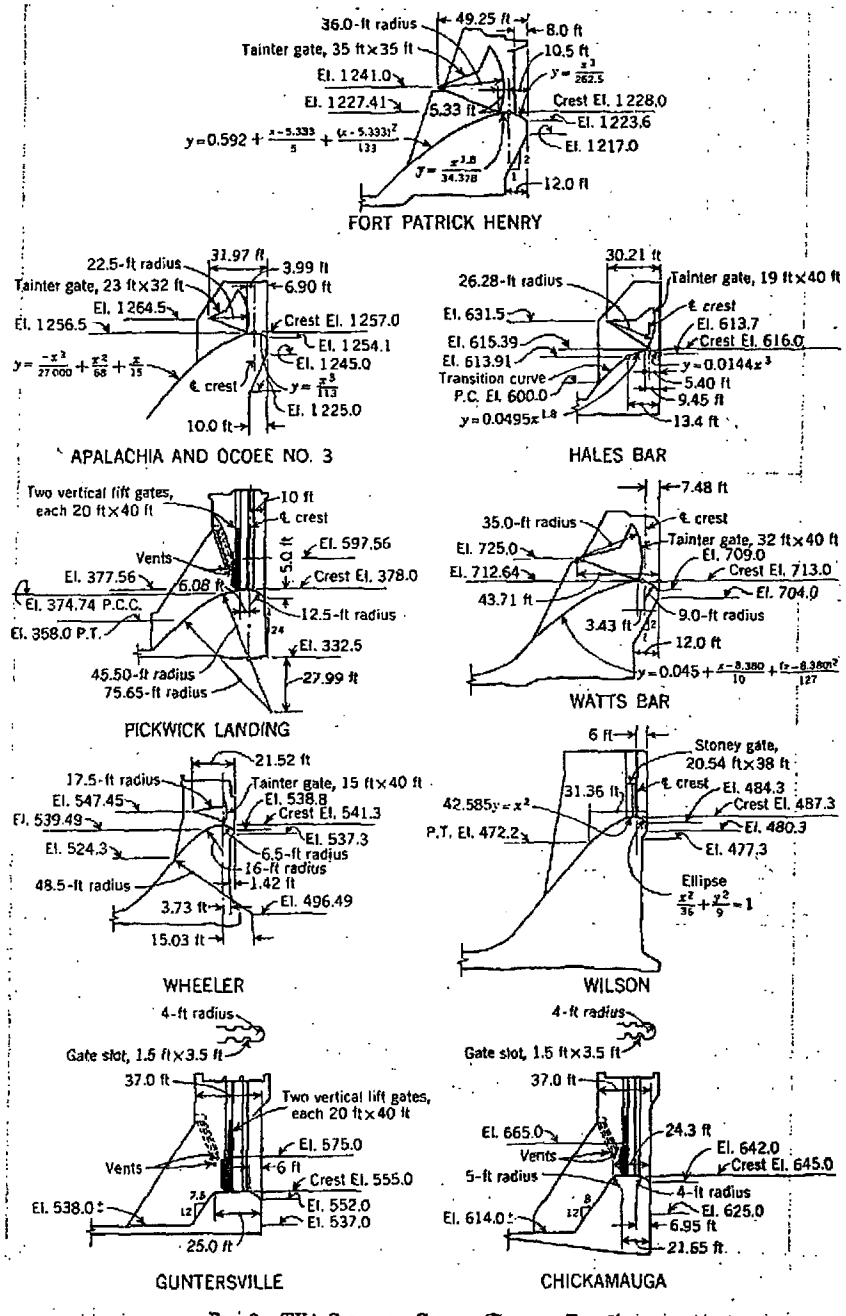

FIG. 2.—TVA SPILLWAY CRESTS (DATA IN FIG. 3)

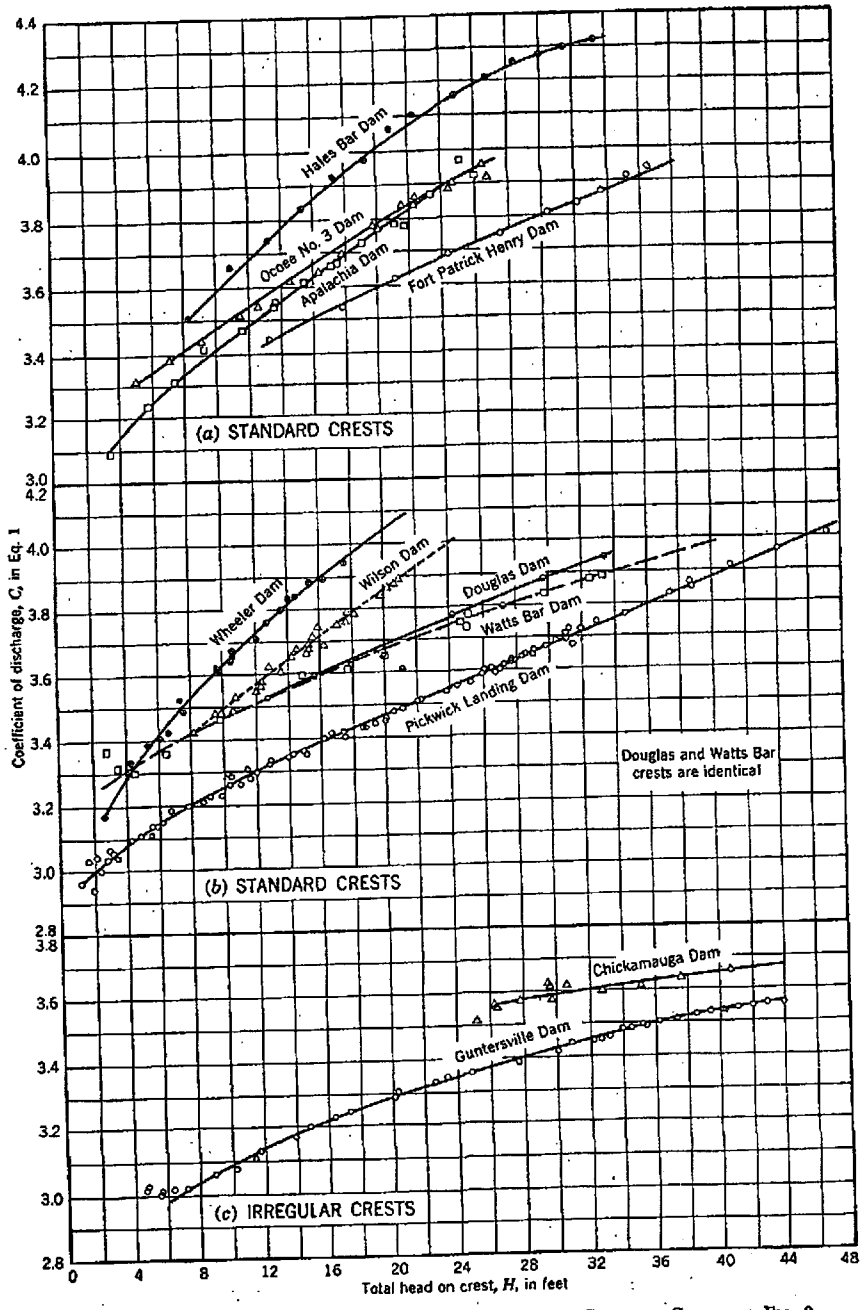

FIG. 3.—DISCHARGE COEFFICIENTS FOR FREE FLOW OVER THE SPILLWAY CRESTS OF FIG. 2

The accuracy of the data is evidenced by the plotting of the data points in Fig. 3. Except in some cases at low heads, the deviation of any plotted point from the coefficient curve does not exceed 0.5%.

Standard Crests.—It has been shown by various authors that the discharge coefficients for all standard crests can be related to each other and that, conversely, the coefficients to be used for a new design can be taken from previous test data.[2,3,4,5] Unfortunately, in most crest designs, due to other design considerations, it is necessary that the shape be varied from the standard form. Nevertheless, satisfactory coefficients can be obtained as sufficient data are now available on a range of crest shapes. By comparison of crest shapes designers may select a coefficient for any particular crest.

Dimensionless plotting provides a means for comparison of crest shapes. This method is used in Fig. 4 on which seven TVA crests which closely approximate standard crests are shown by the solid lines, with the dashed line representing a standard crest shape.[2] The horizontal coordinate, x, and the vertical coordinate, y, of the crest curve have been divided by the design head, H_e.

TABLE 1.—DESIGN DATA FOR ELEVEN MODELS OF TVA SPILLWAYS

Project	Model scale	Design head, H_e, in feet	Upstream depth, P, in feet	$\frac{H_e}{P}$	Pier nose radius, in feet
Hales Bar	1:34.76	18	32	0.56	3.00
Ocoee No. 3	1:28.72	23	67	0.35	3.00
Apalachia	1:28.72	23	97	0.24	3.00
Fort Patrick Henry	1:50	35	43	0.81	3.25
Wheeler	1:34.35	16.5	43	0.38	2.50
Wilson	1:39.4	19	75	0.25	4.00
Douglas	1:35	23.5	133	0.18	3.25
Watts Bar	1:35	23.5	52	0.45	3.25
Pickwick Landing	1:50	31.5	32	0.98	3.75
Chickamauga	1:50		20		4.00
Guntersville	1:50		18		4.00

The design head was determined by fitting the real and standard curves at the crest point ($x = 0$) and at the intersection of the curve with the upstream vertical face. These design-head values are presented in Table 1. The design-head discharge coefficients (C_e) determined from Fig. 3 are shown in Fig. 4.

The TVA crests all fairly closely approximate the standard curve from the upstream spillway face to a point somewhere downstream from the crest which was determined by the position of the gate seal. Below this latter point, the crest shape was modified to fit the trajectory of a jet issuing from under the gate when set at a small opening. The upstream face for a standard crest is vertical. The upstream face of the TVA crests, as shown in Fig. 4, deviates from the vertical. Other experimenters have established the fact that the shape of the upstream face generally has little influence on the discharge coefficient.[3]

[2] "Final Reports of Boulder Canyon Project," *Bulletin No. 3*, Part VI, Hydraulic Investigations, Bureau of Reclamation, U. S. Dept. of the Interior, Washington, D. C., 1947.

[4] "Engineering Hydraulics," edited by Hunter Rouse, John Wiley & Sons, Inc., New York, N. Y., 1950.

[5] "Discharge Coefficients for Irregular Overfall Spillways," by J. N. Bradley, *Engineering Monograph No. 9*, Bureau of Reclamation, U. S. Dept. of the Interior, Washington, D. C., 1952.

Fig. 4 indicates that the shape of the curve from the crest to a point somewhere in the neighborhood of $x/H_o = 0.5$ materially affects the coefficient. As the curve is raised above the standard curve, the coefficient is decreased. This can be seen by comparing the (y/H_o)-values at $x/H_o = 0.5$ with C_o. The comparative crests in Fig. 4 have been placed in the order of decreasing (Y/H_o)-values. No reasonable correlation of C_o with either upstream shape of H_o/P can be determined.

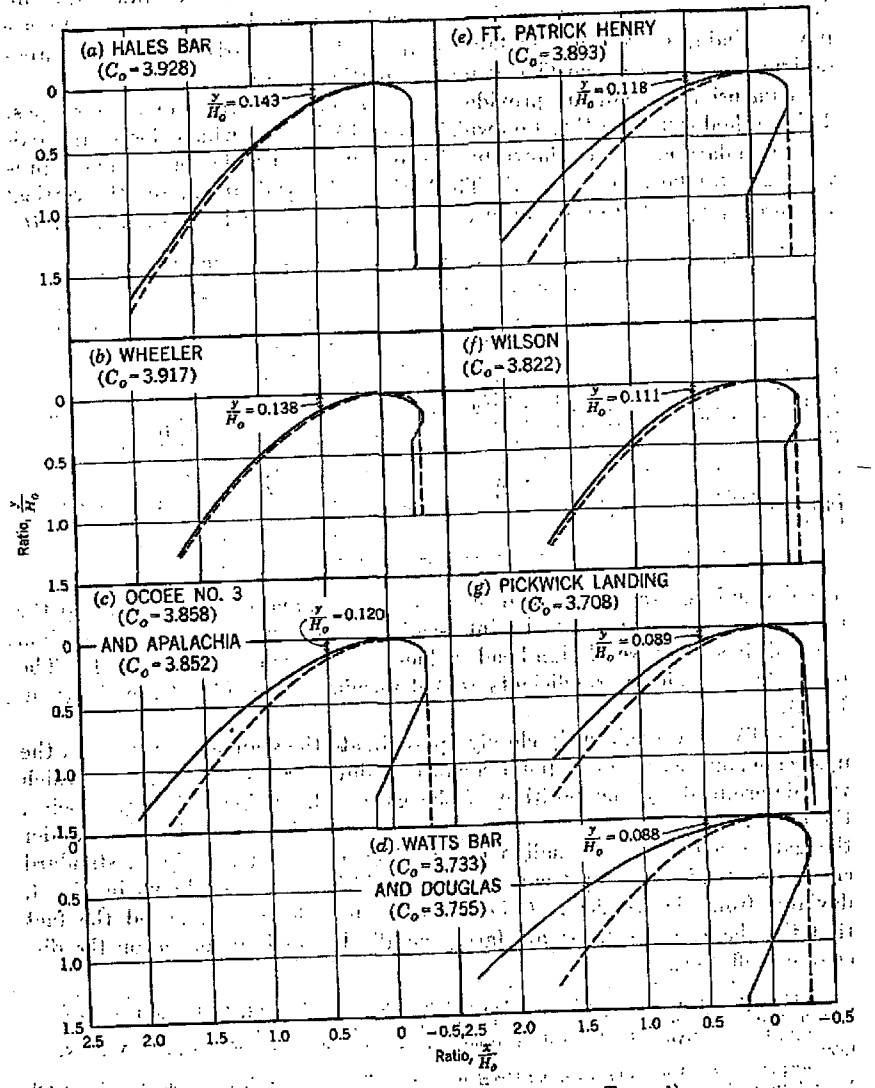

Fig. 4.—Comparative Crests (H_o/P Shown in Table 1)

The relationships between the discharge coefficient and the ratio of any head to the design head, H/H_o, are shown in Fig. 5. In Fig. 5(*a*) the value of C is plotted against H/H_o for the four crests—Apalachia, Ocoee No. 3, Hales Bar (Tennessee), and Fort Patrick Henry (Tennessee)—that most closely follow the standard crest shape. The maximum variation of the individual points from

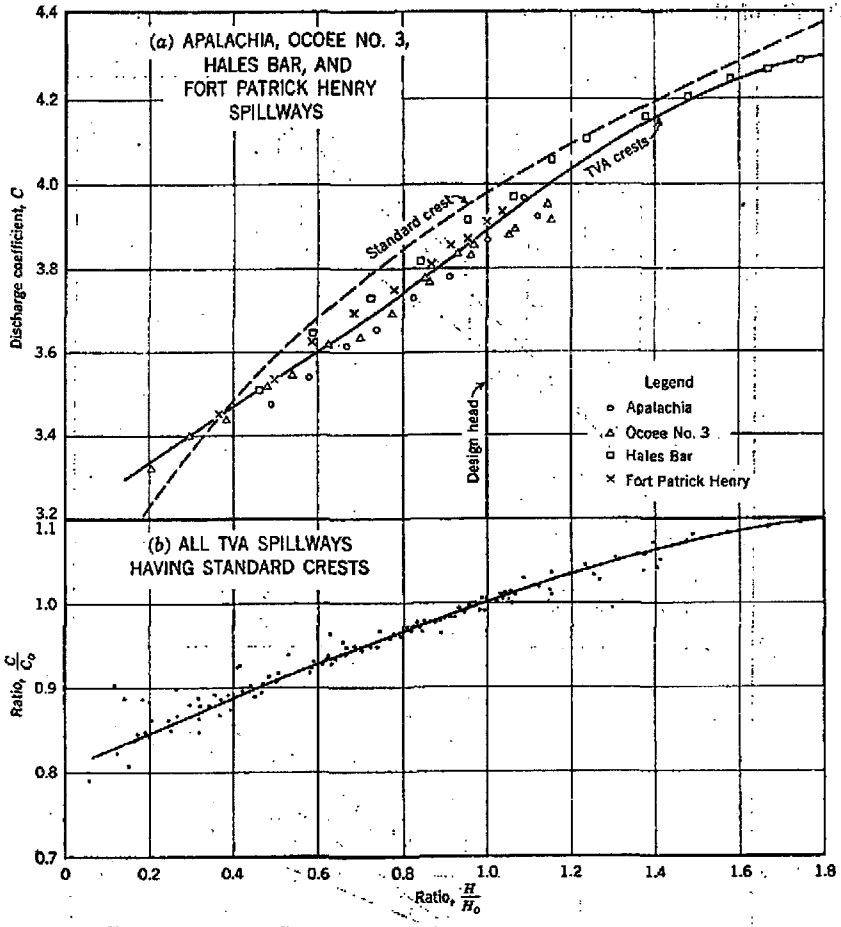

Fig. 5.—Discharge Coefficients for Spillways Having Standard Crests

the average curve for TVA crests is 0.5%. The standard-crest curve shown by the dashed line in Fig. 5 is that of W. P. Creager and J. D. Justin.[2] This curve is approximately 2% higher than the TVA curve. Fig. 5(*b*) is a dimensionless plot of the data from Figs. 3(*a*) and 3(*b*). The deviation of the points from the average curve is greater than in Fig. 5(*a*) because all crests are included, but for design purposes the curve should be useful. Actually, the

curve is more firmly established than it may appear because the curve itself obliterates several test points.

Irregular Spillway Crests.—The designation "irregular spillway crests" is used to distinguish between standard spillway crests and other crest forms. Only two of the TVA spillways, those at Chickamauga, Tenn., and Guntersville, Ala., have irregular spillway crests. Both are trapezoidal in cross section. Details of these spillway crests and the discharge coefficients computed using

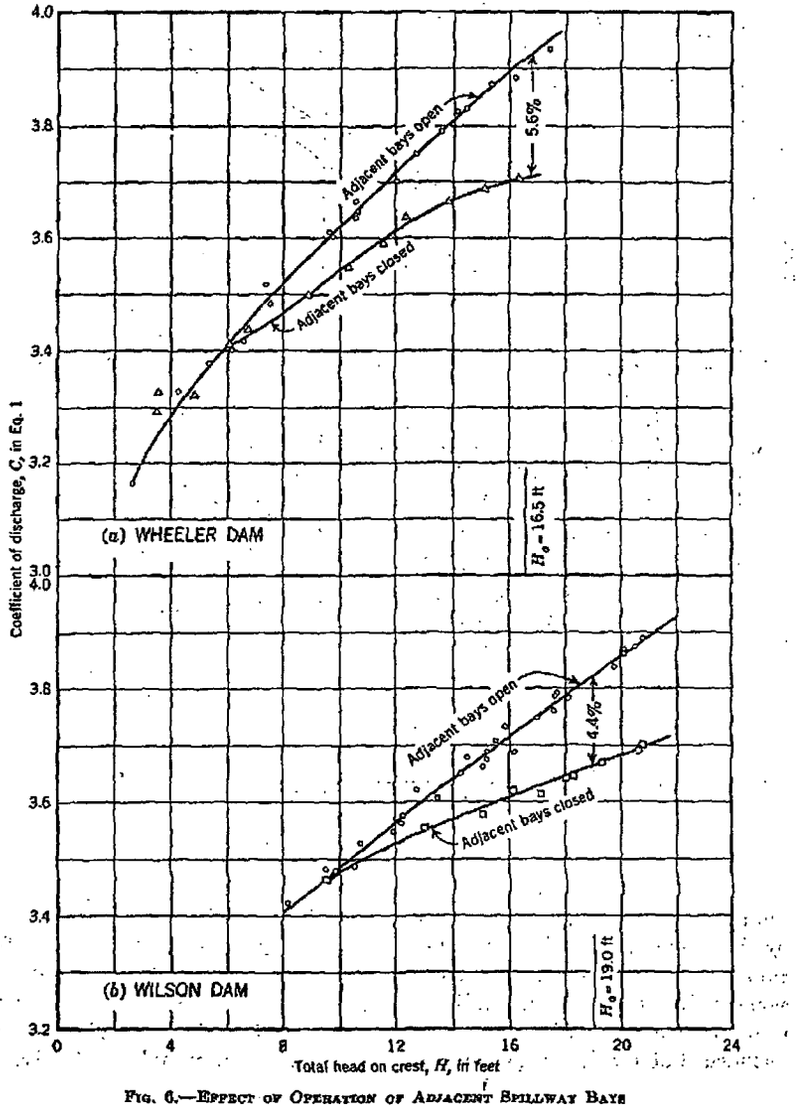

FIG. 6.—EFFECT OF OPERATION OF ADJACENT SPILLWAY BAYS

Eq. 1 from the model-study data are shown in Fig. 3(*c*). The two crests differ chiefly in the shape of the upstream and downstream edges of the crest and the height above the apron. Over the range of the tests of the Chickamauga spillway the coefficients are consistently from 3% to 5% greater than those for the Guntersville spillway. The additional height of the crest above the apron and the rounding of the near upstream edge of the Chickamauga crest would operate to increase the discharge coefficients.

The Effect of Operating Adjacent Spillway Bays.—In the TVA water-control operations, it is necessary to operate single spillway bays and groups of consecutive spillway bays. Because a greater contraction forms at a pier situated next to a closed bay, models of the Wilson and Wheeler spillways in Tennessee were tested with adjacent spillway bays open and closed to determine the difference in contraction effects at the piers.

Fig. 6 shows the head-coefficient relationships for the two conditions tested. The discharge coefficient at the design head was 5.6% higher at Wheeler Dam with adjacent bays opened and 4.4% higher at Wilson Dam than with these bays closed. These relationships show the importance of spillway pier contraction effects in spillway discharge determinations.

SUBMERGENCE DISCHARGE COEFFICIENTS FOR FLOW OVER SPILLWAY CRESTS

Chickamauga Dam, Guntersville Dam, Pickwick Landing Dam (Tennessee), and Watts Bar Dam are subject to submergence of the crest at periods of high discharge. To determine the effect of this submergence model tests were conducted by establishing a constant rate of discharge and varying the tailwater elevation to determine the relationship between the headwater and tailwater elevations. This procedure was repeated for several discharge rates covering the operating range at the dam.

Two flow conditions were observed in the model tests which are characterized as "plunging nappe" and "flowing nappe." In the condition of plunging nappe the discharge issuing from the spillway plunges down into the tailwater and appears to follow the boundary surface of the spillway.

In the condition of flowing nappe the flow is nearly horizontal, producing an undulating surface flow in the tailrace channel. The plunging nappe usually occurs with low submergence whereas the flowing nappe occurs with high submergence. When the headwater and tailwater head relationship at a constant rate of discharge was plotted for each series of tests, it was found that the change from plunging nappe to flowing nappe had no apparent effect on the discharge coefficient.

The results from these tests on the four spillways have been plotted in Fig. 7 in the dimensionless form, d/H, against C_s/C, in which d is the depth of submergence and H is the total head above the crest. The coefficient, C_s, was computed from Eq. 1 using the H-value for the submerged conditions; C was determined using the H-value for the free-flow condition.

No systematic variation of C_s/C could be determined for any variable except the (d/H)-ratio for any of the conditions tested. However, no relatively low discharges were tested because in practice the TVA installations can never be submerged at low discharges.

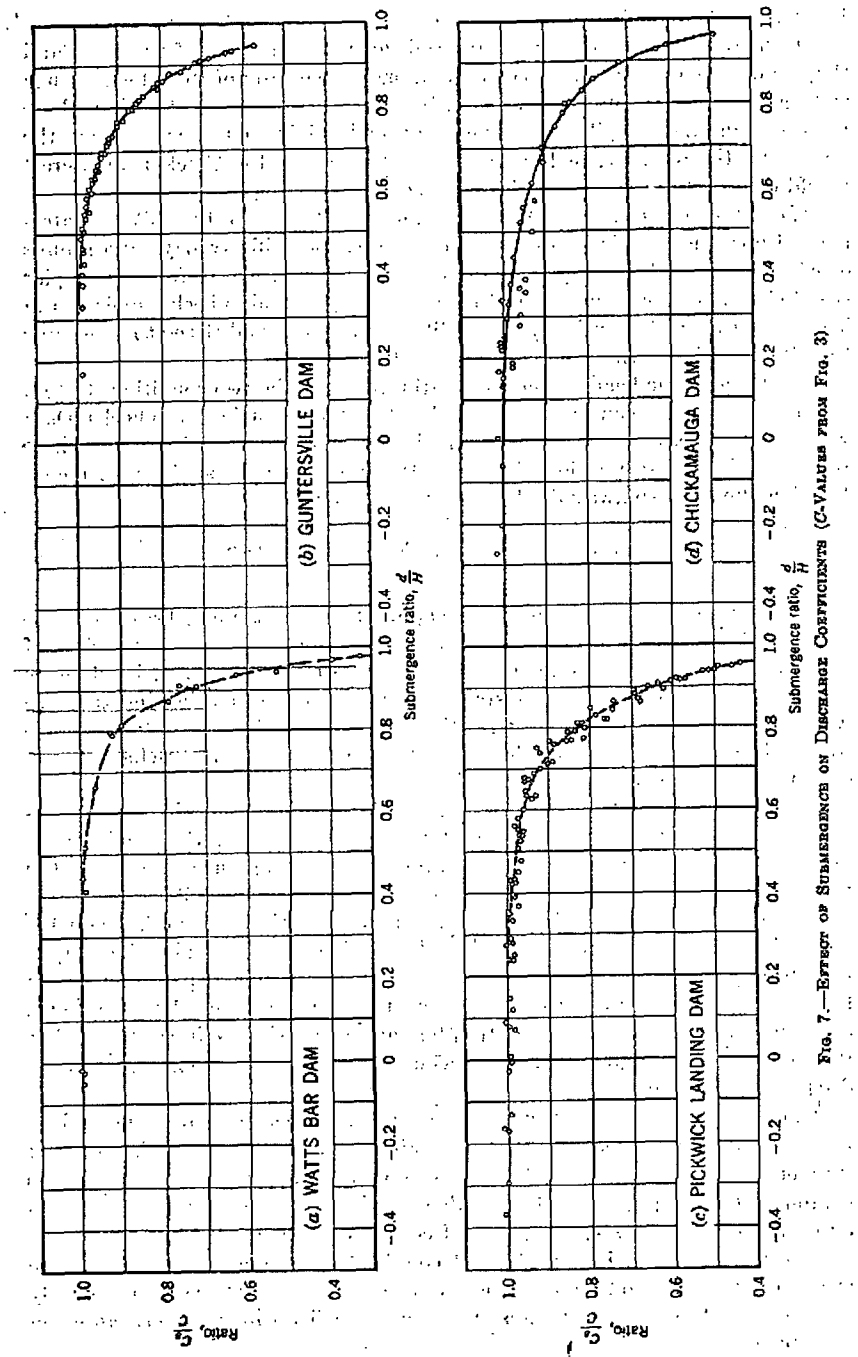

FIG. 7.—EFFECT OF SUBMERGENCE ON DISCHARGE COEFFICIENTS (C-VALUES FROM FIG. 3)

In Fig. 8 the four curves of Fig. 7 are shown on a single plot. Although the maximum spread between curves is about 10%, this is to be expected considering the wide range of crest shapes used in the tests.

FREE-DISCHARGE COEFFICIENTS FOR FLOW OVER VERTICAL LIFT GATES

The Pickwick Landing vertical lift gates are representative of this type of gate, which has been used on several TVA projects. In Fig. 9(*a*) are shown details of the lower spillway gate leaf. For heads greater than 2 ft, this gate is essentially a sharp-crested weir 40 ft long and 20 ft high with piers 7.5 ft thick at each end of the gate. Air intakes were installed in the sides of the piers just below the top of the gate to ventilate the underside of the nappe.[6] Model tests were conducted with the 1/50-scale, 3-bay spillway model.

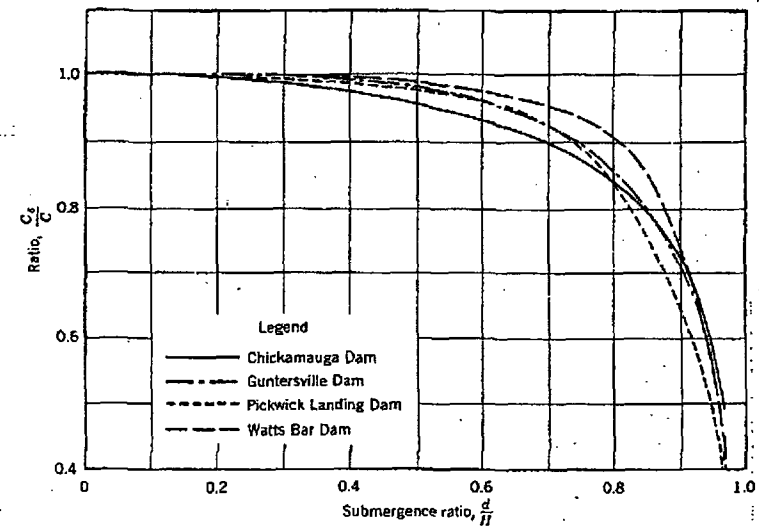

FIG. 8.—COMPARISON OF SUBMERGENCE EFFECTS FOR VARIOUS SPILLWAY CREST SHAPES

In Fig. 9(*b*) is shown the head-coefficient relationship for flow over the crest of the spillway gate. The coefficient, C, was computed from Eq. 1 using the top of the gate as crest elevation. The points define the head-coefficient relationship for heads between 3 ft and 28 ft. Each point was determined from the average of from 3 to 5 separate tests. A constant value of C equal to 3.428 is shown for heads in excess of 12 ft. For heads of from 12 ft to about 4 ft the model test curve shows a gradual rise in the coefficient, with an abrupt drop-off when the heads are approximately 4 ft and less. This curve takes the characteristic form for the coefficients of a sharp-crested weir, the rise and fall in the coefficient curve being due to the nappe clinging to the surface of the weir. This phenomenon is a function of the absolute head. Therefore, similarity between the model and prototype did not exist for prototype heads

[6] "Aeration of Spillways," by G. H. Hickox, *Transactions*, ASCE, Vol. 109, p. 537.

of less than 12 ft. Because the gate has a 10-in.-wide flat top, at low heads the prototype can be expected to exhibit discharge characteristics similar to those of the model. However, for a head in excess of about 2 ft the prototype can be expected to act similarly to a sharp-crested weir and to have a flat coefficient curve.

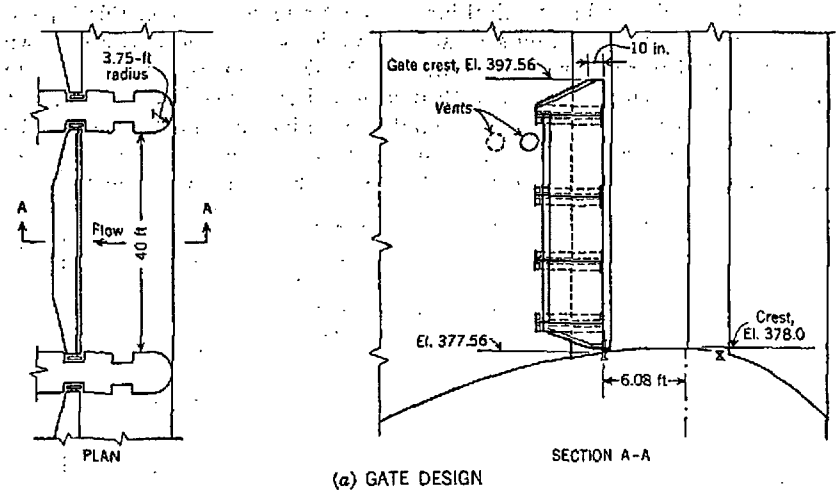

(a) GATE DESIGN

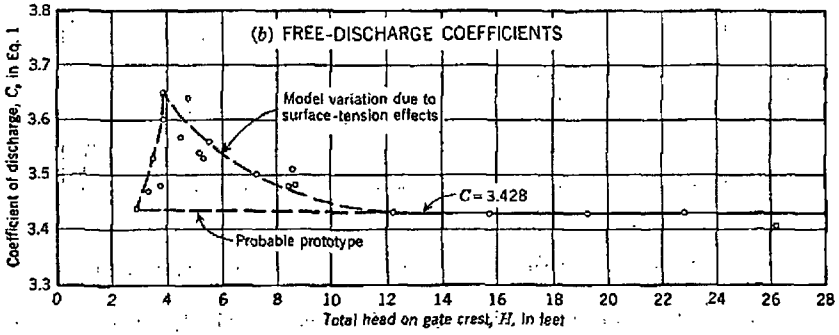

FIG. 9.—VERTICAL LIFT GATE, PICKWICK LANDING DAM

SUBMERGENCE DISCHARGE COEFFICIENTS FOR FLOW OVER A VERTICAL LIFT GATE

To obtain data on the effect of the submergence of flow over vertical-lift gates, model tests were conducted in a manner similar to that used in determining submergence effects on spillway crests. The coefficient, C_s, was computed from Eq. 1 in a manner similar to that used for the spillway crest data but using the top of gate as the crest elevation. Fig. 10 shows a plot of the headwater-tailwater relationships that have been determined. The data presented in Fig. 10 represent the rating of a three-bay, 1/50-scale model of the Pickwick Landing Dam. The total equivalent prototype crest width was

117.8 ft. The discharge was for three spillway bays. These curves illustrate the characteristic flow phenomena associated with this type of gate. Each constant-discharge curve begins with a horizontal line where the head-discharge relationship is not affected by the tailwater level. Just before the tailwater elevation reaches the gate crest level there is a drop in the headwater

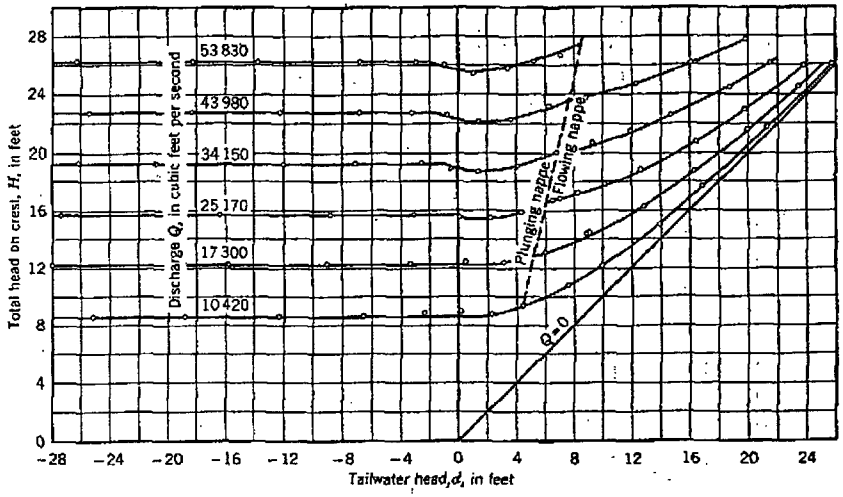

FIG. 10.—HEADWATER-TAILWATER RELATIONS FOR FLOW OVER A VERTICAL LIFT GATE (PROFILE SKETCH IN FIG. 11)

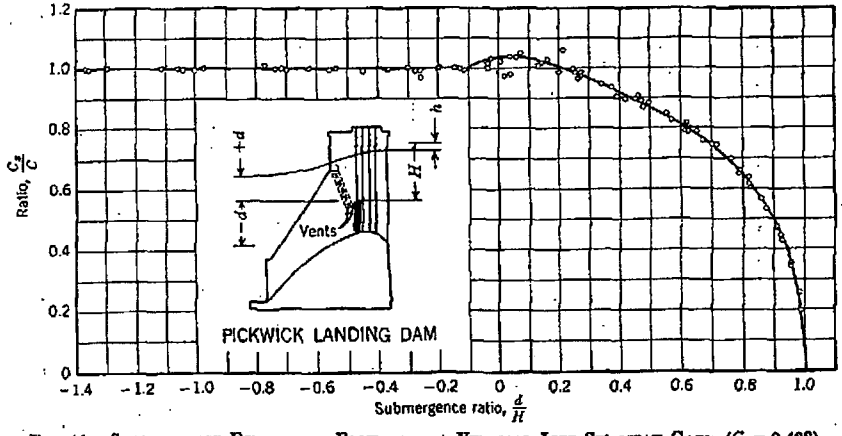

FIG. 11.—SUBMERGENCE EFFECT FOR FLOW OVER A VERTICAL LIFT SPILLWAY GATE ($C = 2.428$)

level for an increase in the tailwater level. Observations of the model operation showed that at this point the air vents, located in the sides of the piers just below the crest of the spillway gate, became submerged by the tailwater, reducing the contraction of the lower nappe issuing from the gate crest. The

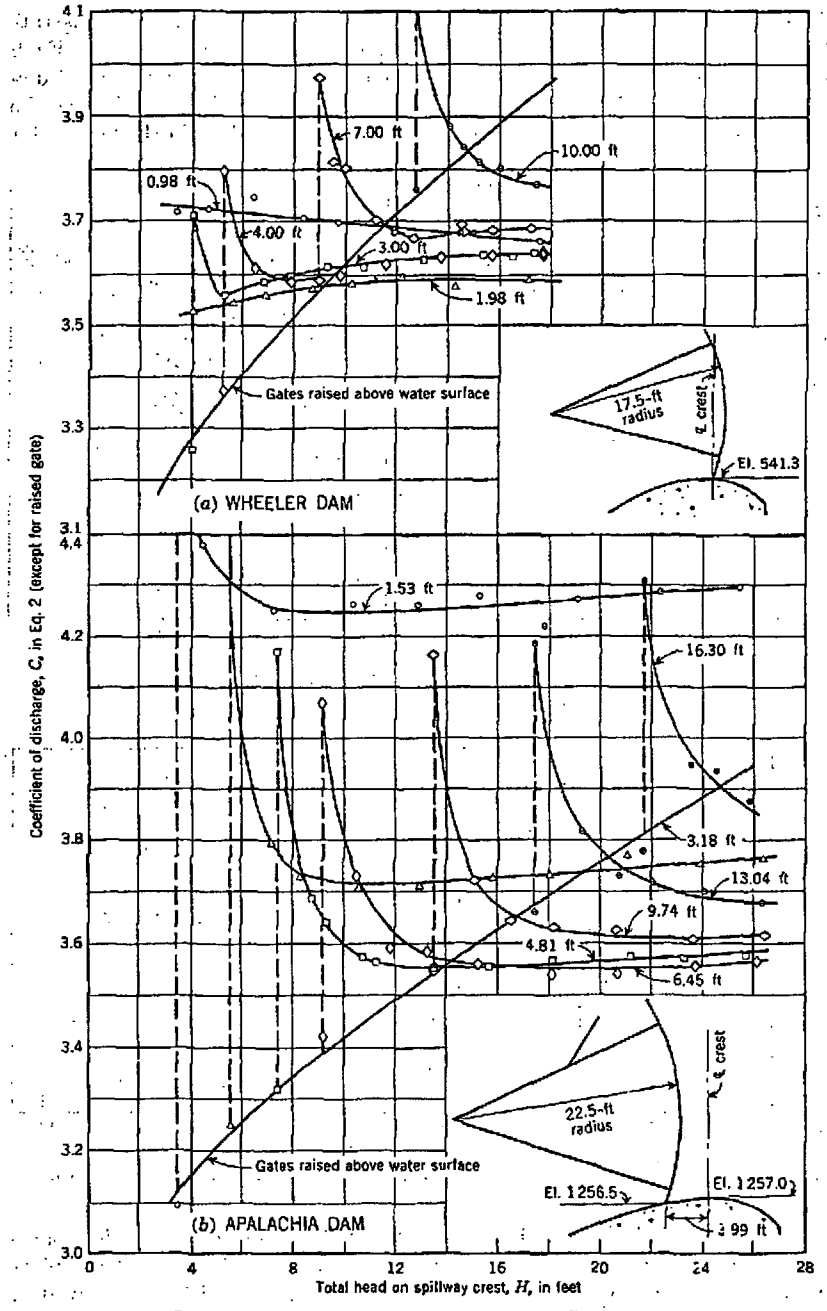

FIG. 12.—TAINTER-GATE SPILLWAY DISCHARGE COEFFICIENTS (DIMENSIONS ON CURVES ARE GATE OPENINGS)

discharge over the gate was thus increased with a consequent lowering of the headwater level.

The flow conditions of plunging nappe and flowing nappe, previously described, also occurred in this type of flow. In this case the change from one to the other is apparent in the data. The dashed line in Fig. 10 indicates the approximate location of the change. At these points the curves show a definite discontinuity in shape. The data of Fig. 10 can be reduced in coeffi-

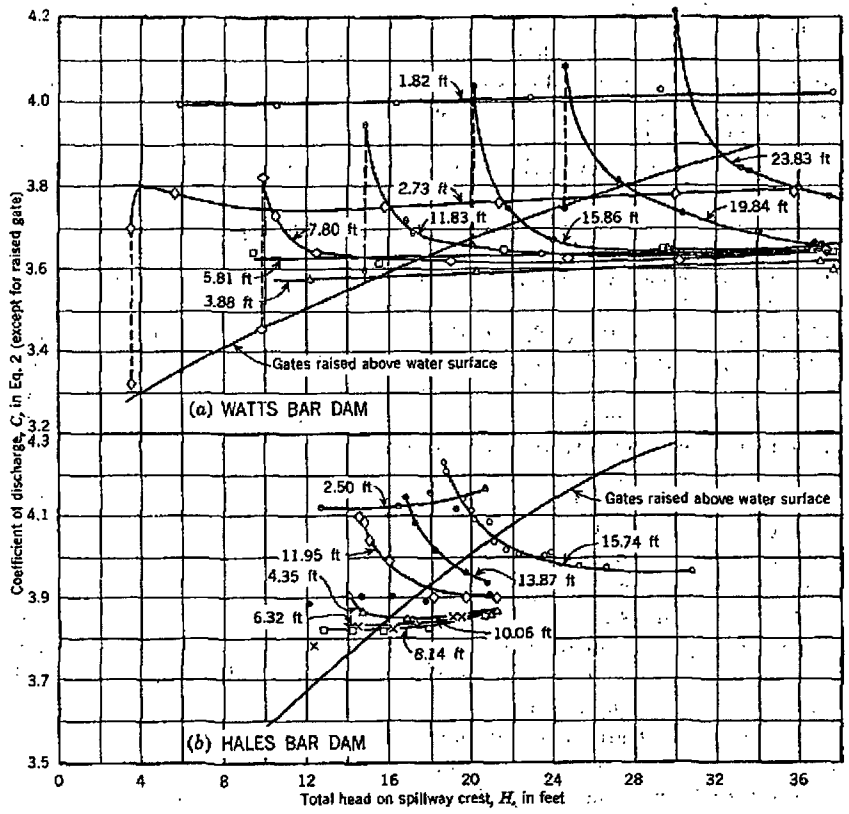

FIG. 13.—TAINTER-GATE SPILLWAY DISCHARGE COEFFICIENTS (DIMENSIONS ON CURVES ARE GATE OPENINGS)

cient form to the single-curve representation shown in Fig. 11. In this illustration, a constant value of C, equal to 3.428, was used in computing the ratio of C_s/C.

DISCHARGE COEFFICIENTS FOR FLOW UNDER TAINTER GATES

The flow under Tainter gates mounted on curved crests is controlled by the geometry of three interrelated variables—the crest shape, the gate, and the gate setting. The major factors which influence the discharge relation-

ships are the position of the gate seal point with respect to the highest point of the spillway crest and the curvature of the upstream face of the gate. In obtaining the model data on the various TVA Tainter-gate installations no attempt has been made to determine the quantitative effect of these factors taken individually. The data presented in Figs. 12 and 13 for the gate settings at Wheeler Dam, Apalachia Dam, Watts Bar Dam, and Hales Bar Dam are not, therefore, applicable to other installations unless the several variables involved are similar.

Data on Tainter-gate coefficients previously published have, in most cases, been based on flow along a horizontal surface although many of these gates are installed on curved crests. The tests reported herein are for Tainter gates mounted on curved spillway crests where the pressure distribution differs considerably from that in a horizontal channel. The coefficients obtained from tests on a horizontal channel are not applicable to installations on curved crests.

The discharge coefficients for Figs. 12 and 13 were computed using Eq. 2, with the heads measured above the crest elevation. The curves designated "Gates raised above water surface" are the free-discharge curves taken from Figs. 3(*a*) and 3(*b*) for which *C*-values were computed using Eq. 1. The points connected by the dashed lines represent the point at which the water touched the bottom edge of the gate. The difference in the *C*-values is, of course, due to the use of Eq. 2 for the gate curve. The Hales Bar tests were not conducted in a manner that allowed the determination of the point of contact of the gate with the free water surface.

The gate opening was measured as the vertical distance above the crest. This definition leads to the somewhat peculiar variation in the coefficients for small gate openings. In Fig. 12(*a*) the data for Wheeler Dam are presented. The Wheeler gate was positioned, as shown in the insert, with the seal at the high point on the crest. With this design, except at the smallest opening, the coefficient curves for each gate position followed the general pattern of an increase in *C* for an increase in gate opening. In Fig. 12(*b*) the data for Apalachia Dam indicate that, when the gate seal is 3.99 ft downstream and 0.50 ft below the highest point on the crest, the coefficients for gate openings of less than 6.45 ft are increased materially with a decrease in gate opening. This is caused by an arbitrary use in Eq. 2 of an *H*-value as measured above the crest rather than as measured above the elevation of the spillway surface below the gate. Thus, although the *H*-value is consistently too small at the smaller gate openings, the effect becomes more appreciable and results in the increase in *C*.

Tainter-Gate Discharge Coefficients with Adjacent Gates Opened or Closed

The results of tests on the six-spillway-bay model of Wheeler Dam with one gate in operation and with six gates in operation are shown in Fig. 14. In operating with all six gates the contraction effect of the end piers was the same as that for the intermediate piers because the model was constructed

with half piers against the sidewalls of the flume. This operation thus represented the case in which all adjacent bays are open.

Effect of Model Scale on Free-Discharge Coefficients

In developing discharge ratings for prototype structures from model data, it is important that the scale at which the model is built be such that the coefficients determined are applicable to the prototype structure. One author has presented data to indicate that with an increase in the model size the discharge coefficients increase.[7] To study this relationship, a series of precise

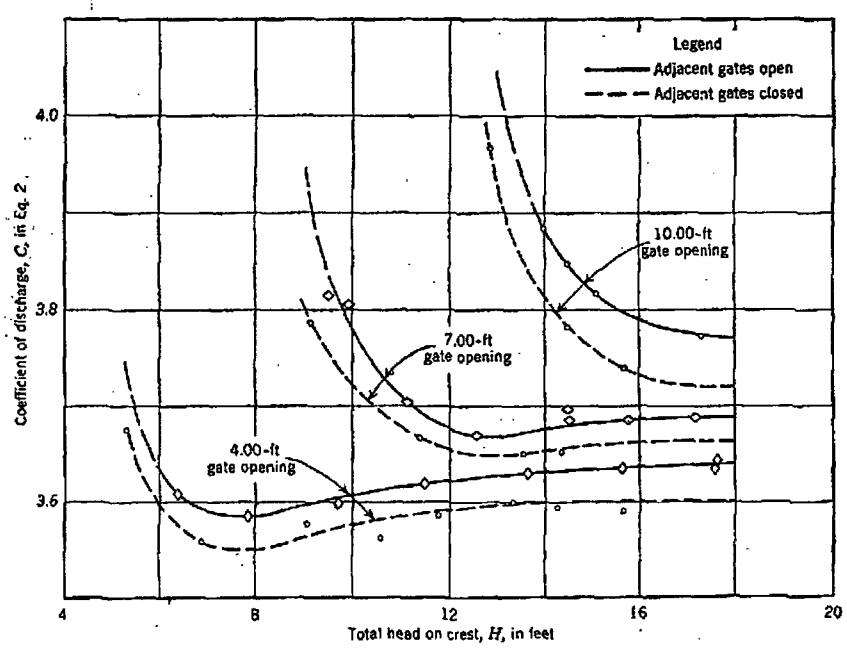

Fig. 14.—Tainter-Gate Discharge Coefficients, *C*, Wheeler Dam

tests was made at the TVA Hydraulic Laboratory under the joint sponsorship of the American Society for Engineering Education, the University of Tennessee (Knoxville) and the TVA.[8] In this study three models of Pickwick Landing spillway were constructed to scales of 1:50, 1:100, and 1:200. Each model consisted of a reproduction of three spillway bays. The shape of the spillway crest and the piers of Pickwick Landing Dam are shown in Figs. 2 and 9(*a*). Similar techniques were used in all tests with one exception. Hook gages reading to 0.0001 ft were used for the 1/200-scale

[7] "Überfallversuche in Berschiedener Modellgrosse," by F. Eisner, The Prussian Experiment Station for Hydraulic Structures and Shipbuilding, Berlin, 1933.

[8] "A Study of the Effect of Model Size on Spillway Coefficients," by C. R. Ownbey, thesis presented in 1949 to the University of Tennessee at Knoxville, in partial fulfillment of the requirements for the degree of Master of Science.

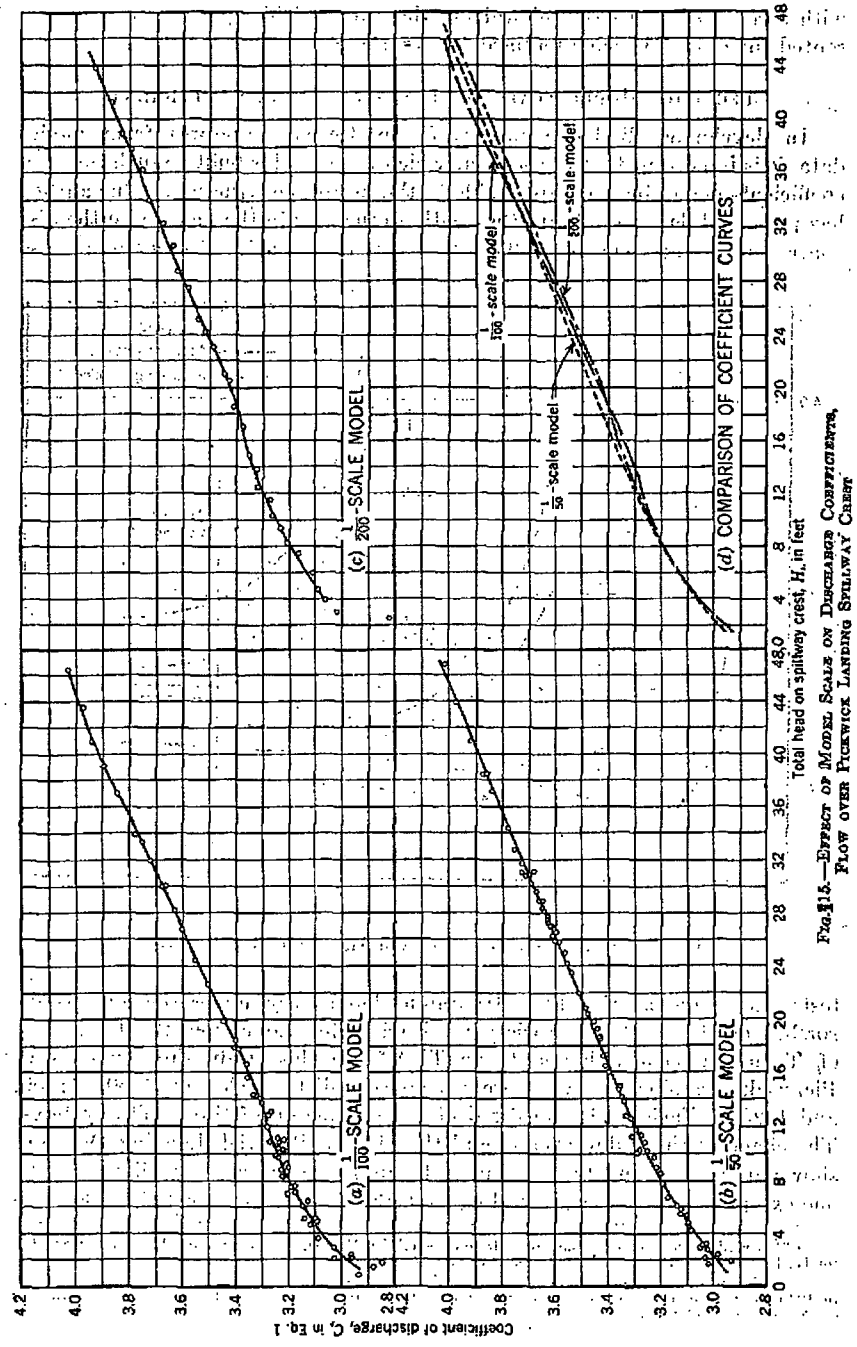

FIG. 15.—EFFECT OF MODEL SCALE ON DISCHARGE COEFFICIENTS, FLOW OVER PICKWICK LANDING SPILLWAY CREST

tests, and gages reading to 0.001 ft were used in the 1/50-scale tests and 1/100-scale tests.

Discharge coefficients for free flow over the crest of each model are shown in Figs. 15(*a*), 15(*b*), and 15(*c*). The coefficients of discharge were computed using Eq. 1. Each curve was drawn through the average of the plotted points.

A comparison of the three coefficient curves is shown in Fig. 15(*d*). The maximum spread of the curves does not exceed 2%. For prototype heads between 2 ft and 8 ft, the three coefficient curves are almost identical. At 13 ft the coefficient curve for the 1/100-scale model is approximately 1% lower than those for the 1/50-scale model and the 1/200-scale model. At 43 ft the curve for the 1/100-scale model is 1% higher than the data for the 1/50-scale model, and that of the 1/200-scale model is 1% lower than that of the 1/50-scale model. Because there is no consistent relationship between the coefficient curves, it is logical to conclude that these variations are merely the result of experimental error and that the model scale did not affect the stage-coefficient relationship. The close agreement of the coefficient curves at the three scales supports the validity of the preparation of prototype ratings based on model tests.

ACKNOWLEDGMENTS

The model studies were made under the general direction of Albert S. Fry, M. ASCE, chief of the Hydraulic Data Branch of the TVA, and under the immediate supervision of G. H. Hickox, M. ASCE, former head of the TVA Hydraulic Laboratory, and Rex A. Elder, M. ASCE, head of the TVA Hydraulic Laboratory. The assistance of Jack C. Jones, J. M. ASCE, is acknowledged in making the computations and preparing the illustrations in this paper. The writer also acknowledges the many helpful suggestions made by Mr. Hickox and Mr. Elder.

APPENDIX. NOTATION

The following letter symbols, adopted for use in the paper and for the guidance of discussers, conform essentially with American Standard Letter Symbols for Hydraulics (ASA-Z10.2-1942), prepared by a committee of the American Standards Association with Society representation, and approved by the Association in 1942:

C = coefficient of discharge for any head:
C_o = coefficient of discharge for the design head;
C_s = coefficient of discharge for submerged flow;
D = depth of flow above the crest, in feet (Fig. 1(*a*));
D_1 = depth, bottom of gate to water surface, in feet (Fig. 1(*b*));
d = submergence tailwater, measured above the crest, in feet (Fig. 1(*a*));
g = acceleration due to gravity, in feet per second per second;

H = total head above the crest, including the velocity head of approach, in feet (Fig. 1);
H_o = design head for a standard crest, including the velocity head of approach, in feet;
h = velocity head of approach, $v^2/2g$, in feet (Fig. 1);
L = spillway crest length, in feet;
P = depth of the approach channel, crest to river bed, in feet (Fig. 1(*a*));
Q = total discharge, in cubic feet per second;
v = average velocity of approach, in feet per second; and
X, Y = crest coordinates, in feet.

AMERICAN SOCIETY OF CIVIL ENGINEERS

Founded November 5, 1852

TRANSACTIONS

Paper No. 2856

WATER CONTROL IN CENTRAL AND SOUTHERN FLORIDA

By Harold A. Scott,[1] M. ASCE

Synopsis

This paper describes the historical efforts made to provide drainage and water control for central and southern Florida. Distribution and utilization of water in the comprehensive plan for flood control and multiple purposes are described. The need for a secondary water-control plan is emphasized.

Introduction

The area described in this paper (Fig. 1) lies south of an east-west line through Lake Harney (about 35 miles north of Cocoa) in Florida in the St. Johns River basin and east of the ridge that extends through Haines City and Sebring. The ridge divides the waters which flow into the Atlantic Ocean and those which flow into the Gulf of Mexico. Water-control problems are quite common throughout the area, although there are a few variations in topography and soil. The area consists of approximately 15,000 sq miles of groveland, pastures, rich agricultural lands, lakes, and marshlands. Elevations range from approximately 7 ft in the vicinity of Miami and 15 ft around Lake Okeechobee to 80 ft in the area of the headwaters of the Kissimmee River basin. (All stages and elevations throughout this paper refer to mean sea level data.) However, the lands of a large part of the area are extremely flat, and natural water courses are not common. Except for the St. Johns River, the Kissimmee River, Fisheating Creek, and a few minor streams, most of the water control is accomplished by man-made canals and drainage districts. Soils in the area vary from sand to peat with a small amount of marl. The areas with higher elevations in the St. Johns and Kissimmee River basins consist of sand mixed with a small amount of organic material in the upper 6 in. to 12 in. In the low areas and marshes, deposits of peat of thicknesses ranging to several feet are found. The Everglades is covered with a layer of peat of thickness ranging to approximately 15 ft at Lake Okeechobee and gradually diminishing to zero at

Note.—Published, essentially as printed here, in October, 1954, as *Proceedings-Separate No. 581*. Positions and titles given are those in effect when the paper was approved for publication in *Transactions*.
[1] Cons. Engr., Reynolds, Smith, and Hills, Jacksonville, Fla.

TVA 488 (REV-5-47) Test Summary OPEN GATE SHEET ____ OF ____

Tellico 1:72

COMPUTED BJC DATE 3-25-69

CHECKED JWB DATE 4-28-69

	Test No.	Date	Time	G.O.	Model TW	Model HW	Model Q	Proto TW	Proto HW	Proto Q	(ERROR IN CONSTANT -7)
X	1	3-17-69		Full	.036	.654	3.284	775.592	820.088	144.4	5
	2				.123	.655	3.271	781.856	820.160	143.8	5
	3				.182	.655	3.275	786.104	820.160	144.0	6
	4				.250	.660	3.266	791.000	820.520	143.6	6
	5				.297	.664	3.267	794.384	820.808	143.7	7
	6				.342	.667	3.266	797.624	821.024	143.6	6
	7				.368	.672	3.274	799.496	821.384	144.0	7
	8				.301	.663	3.259	794.672	820.736	143.3	7
X	9				.132	.652	3.254	782.504	819.944	143.1	6
X	10	3-17-69		Full	-.004	.652	3.245	772.712	819.944	142.8	7
									Ave.	143.7	10
X	11	3-18-69	9:00	Full	-.015	.624	3.049	771.920	817.928	134.1	6
X	12		9:30		.058	.624	3.049	777.176	817.928	134.1	6
	13		10:15		.161	.627	3.039	784.592	818.144	133.2	6
X	14		10:35		.110	.624	3.044	780.920	817.928	133.9	5
	15		11:15		.309	.637	3.041	795.241	818.864	133.7	6
	16		11:45		.242	.630	3.038	790.424	818.360	133.6	6
	17		1:10		.363	.642	3.043	799.136	819.224	133.8	5
	18		2:00		.198	.628	3.041	787.256	818.216	133.7	6
										Ave 133.8	5
X	19	3-18-69	2:45	Full	.041	.592	2.799	775.952	815.624	123.6	12
X	20		3:25		.092	.592	2.801	779.624	815.624	123.2	10
X	21		3:50		-.086	.592	2.806	766.904	815.624	123.4	8
	22		4:20		.162	.592	2.799	784.664	815.624	123.1	10
	23	3-19-69	8:45		.140	.593	2.799	783.080	815.696	123.1	10
	24		9:20		.244	.598	2.801	790.568	816.056	123.2	8
	25		9:50		.194	.596	2.803	786.968	815.912	123.3	6
	26		10:25		.300	.604	2.803	794.600	816.488	123.3	6
	27		10:60		.346	.609	2.802	797.912	816.848	123.2	4
	28		11:15		.376	.614	2.791	799.928	817.208	122.7	11
	29		11:40		.427	.625	2.801	803.744	818.000	123.2	10
	30		1:10		.152	.594	2.798	783.944	815.768	123.1	8
	31		1:60		.123	.593	2.800	781.856	815.696	123.1	6
										Ave 123	7

TVA 488 (REV-9 47) Test Summary OPEN GATE SHEET ____ OF ____

Tellico 1.72

COMPUTED KWK DATE 4-3-69 / 3-25-6

CHECKED JWC DATE 4-28-6

	Test No.	Date	Time	G.O.	Model TW	Model HW	Model Q	Prado TW	Prado HW	Prado Q	ERROR / CONSTANT
X	32	3-20-69	10:15	Full	-.132	.564	2.604	763.496	813.608	114.5	45
X	33		10:45		-.004	.564	2.600	772.712	813.608	114.3	69
X	34		11:15		.036	.565	2.606	775.592	813.680	114.6	33
	35		11:45		.087	.565	2.604	779.264	813.680	114.5	57
	36		12:20		.156	.566	2.610	784.232	813.752	114.8	09
	37		3:15		.199	.570	2.616	787.328	814.040	115.0	73
	38		3:40		.261	.573	2.609	791.792	814.256	114.7	65
	39		4:00		.334	.581	2.604	797.048	814.832	114.5	45
	40		4:35		.395	.593	2.606	801.440	815.696	114.6	33
	41	3-21-69	8:30		.394	.592	2.602	801.368	815.624	114.4	57
	42		8:50		.180	.569	2.627	785.960	813.968	115.5	56
	43		9:20		.136	.568	2.630	782.792	813.896	115.6	68
	44		9:55		.277	.579	2.621	792.944	814.400	115.3	33
									Ave	114.9	39
X	45		9:00		-.124	.502	2.185	764.07	809.14	96114	
X	46		9:30		-.046	.503	2.187	769.76	809.22	96202	
X	47		9:55		+.025	.503	2.187	774.80	809.22	96202	
X	48		10:20		.063	.503	2.182	777.54	809.22	95982	
	49		10:50		.113	.504	2.180	781.14	809.29	95894	
	50		11:20		.165	.506	2.184	784.88	809.43	96070	
	51		11:45		.218	.508	2.182	788.70	809.58	95982	
	52		12:25		.266	.512	2.185	792.15	809.86	96114	
	53		1:05		.312	.521	2.193	795.46	810.51	96466	
	54		1:40		.336	.525	2.193	797.19	810.80	96466	
	55		2:10		.399	.541	2.193	801.73	811.95	96554	
									Ave	96186	

TVA 480 (REV-5 47)

Test Summary

SHEET _____ OF _____

Tellico 1:72

COMPUTED KWK DATE 4-3-69

CHECKED JWB DATE 4-28-69

	Test No.	Date	Time	G.O.	Model TW	Model HW	Model Q	Proto TW	Proto HW	Proto Q
X	56	4-2-69	11:25		-.180	.460	1.912	760.04	806.12	84105
X	57		11:55		-.094	.460	1.906	766.23	806.12	83841
X	58		1:00		.030	.460	1.907	~~755.16~~ 775.16	806.12	83885
	59		1:30		.107	.461	1.910	780.70	806.19	84012
	60		1:55		.163	.463	1.905	784.74	806.34	83797
	61		2:25		.212	.466	1.911	788.26	806.55	84061
	62		2:50		.256	.471	1.912	791.43	806.91	84105
	63		3:25		.302	.478	1.911	794.74	807.42	84061
	64		3:55		.355	.490	1.909	798.56	808.28	83973
	65		4:25		.406	.512	1.910	802.23	809.86	84012
										Ave 83994
	66		11:20		.006	.425	1.682	777.43	803.60	73988
	67		11:45		.059	.425	1.678	777.25	803.60	73812
	68		1:05		.116	.426	1.683	781.35	803.67	74032
	69		1:40		.170	.428	1.681	785.24	803.82	73944
	70		2:15		.214	.431	1.686	788.41	804.03	74164
	71		2:45		.253	.434	1.682	791.22	804.25	73988
	72		3:20		.303	.445	1.688	794.82	805.04	74252
	73		3:45		.359	.462	1.679	798 85	806.26	73856
	74		4:15		.405	.488	1.681	802 16	808.14	73944
										Ave 73998
	75		11:10		-.041	.394	1.488	770.05	801.87	65454
	76		11:50		.054	.394	1.491	776.89	801.37	65586
	77		1:05		.130	.395	~~1.490~~ 1.498	782.36	801.44	~~65604~~ 65846
	78		1:30		.190	.398	1.486	786.68	801.66	65366
	79		1:50		.227	.401	1.489	789.34	801.87	65498
	80		2:25		.296	.414	1.490	794.31	802 81	65542
	81		3:00		.387	.457	1.483	800 86	805.90	65234
	82		3:25		.365	.446	1.483	799.28	805.11	65234
										AVG. 65427

TVA 4232 (WCP-7-50)

Tennessee Valley Authority

Hydraulic Data Branch
Hydraulic Laboratory Section

Party B.J.C

Date 5-29-69

Computed Date

Checked JWR

Date 6-9-69

Sheet ___ of ___

Subject

Project

GAGE READINGS

Test No. 788

1' G.O.

Time	Rdg. No.	Weir Gage	Gage Reading (R)								
						H/O					
	1					1.033					
	2					33					
	3					33					
	4					33					
	5					33					
	6					33					
	7					33					
	8					33					
	9					33					
	10					33					
Sum of Rdgs. (ΣR)											
Average Rdg. (R)						1.033					
Gage Reading at Datum Z(±)						.423					
(R-Z)						.610					
*1/S (R-Z)						43.920					
Elev. of Datum (D)		773.0				773.0					
W. S. Elev. 1/S (R-Z) + D						816.920					

TVA 4232 (WCP-7-50)

Tennessee Valley Authority

Hydraulic Data Branch
Hydraulic Laboratory Section

Party BJC

Date 5-29-69
Computed
Date
Checked JWB
Date 6-9-69

Sheet ___ of ___

Subject ___

Project ___

GAGE READINGS

Test No. 489

1' 6.0.

Time	Rdg. No.	Weir Gage	Gage Reading (R)								
						H4					
	1					.980					
	2					80					
	3					80					
	4					80					
	5					80					
	6					80					
	7					80					
	8					80					
	9					80					
	10					80					
Sum of Rdgs. (ΣR)											
Average Rdg. (R)						.980					
Gage Reading at Datum Z(±)						.423					
(R-Z)						.557					
*1/S (R-Z)						40.104					
Elev. of Datum (D)			773.0			773.0					
W. S. Elev. 1/S (R-Z) + D						813.104					

TVA 4232 (WCP-7-50)

Tennessee Valley Authority

Hydraulic Data Branch
Hydraulic Laboratory Section

Party BJC

Date 5-29-69

Computed

Date

Checked JWB

Date 6-9-69

Sheet ___ of ___

Subject

Project

GAGE READINGS

Test No. 490

1' G.O.

Time	Rdg. No.	Weir Gage	Gage Reading (R)								
						HW					
	1					.907					
	2					07					
	3					07					
	4					07					
	5					07					
	6					07					
	7					07					
	8					07					
	9					07					
	10					07					
Sum of Rdgs. (ΣR)											
Average Rdg. (R)						.907					
Gage Reading at Datum Z(±)						.423					
(R-Z)						.484					
*1/S (R-Z)						34.848					
Elev. of Datum (D)		773.0				773.0					
W. S. Elev. 1/S (R-Z) + D						807.848					

TVA 4232 (WCP-7-50)

Tennessee Valley Authority

Hydraulic Data Branch
Hydraulic Laboratory Section

Party BJC

Date 5-29-69

Computed Date

Checked JWB
Date 6-9-69

Sheet ___ of ___

Subject

Project

GAGE READINGS

Test No. 491

1' G.O.

Time	Rdg. No.	Weir Gage	Gage Reading (R)									
						.40						
	1					.824						
	2					24						
	3					24						
	4					24						
	5					24						
	6					24						
	7					24						
	8					24						
	9					24						
	10					24						
Sum of Rdgs. (ΣR)												
Average Rdg. (R)						.824						
Gage Reading at Datum Z(±)						.423						
(R-Z)						.401						
*1/S (R-Z)						28.872						
Elev. of Datum (D)		773.0				773.0						
W. S. Elev. 1/S (R-Z) + D						801.872						

TVA 4232 (WCP-7-50)

Tennessee Valley Authority

Hydraulic Data Branch
Hydraulic Laboratory Section

Party JWB
Date 6-12-69
Computed
Date
Checked BJC
Date 6-18-69

Sheet ___ of ___
Subject
Project

GAGE READINGS

Test No. 492

Time	Rdg. No.	Weir Gage	Gage Reading (R)								
					11	HW					
	1					.853					
	2					3					
	3					3					
	4					3					
	5					3					
	6					3					
	7					3					
	8					3					
	9					3					
	10					3					
Sum of Rdgs. (ΣR)											
Average Rdg. (R)						853	---				
Gage Reading at Datum Z(±)						423					
(R-Z)						430					
*1/S (R-Z)						30.970 40.760					
Elev. of Datum (D)		773.0				773.0					
W. S. Elev. 1/S (R-Z) + D						803.970					

TVA 4232 (WCP-7-50)

Tennessee Valley Authority

Hydraulic Data Branch
Hydraulic Laboratory Section

Party JWB

Date 6-13-69

Computed Date

Checked BJC Date 6-18-69

Sheet ___ of ___

Subject

Project

GAGE READINGS

Test No. 493

1'G.O.

Time	Rdg. No.	Weir Gage	Gage Reading (R) TW			HW					
	1					.992					
	2					2					
	3					2					
	4					2					
	5					2					
	6					2					
	7					2					
	8					2					
	9					2					
	10					2					
Sum of Rdgs. (ΣR)											
Average Rdg. (R)						.992					
Gage Reading at Datum Z(±)						.423					
(R-Z)						.569					
*1/S (R-Z)						40.968					
Elev. of Datum (D)			773.0			773.0					
W. S. Elev. 1/S (R-Z) + D						813.968					

TVA 4232 (WCP-7-50)

2417
2287
130

Tennessee Valley Authority

Hydraulic Data Branch
Hydraulic Laboratory Section

Party JWB

Date 6-16-69

Computed

Date

Checked E.C.

Date 6-18-69

Sheet ____ of ____

Subject

Project

GAGE READINGS

Test No. 494

1' G.O.

Time	Rdg. No.	Weir Gage	Gage Reading (R)								
			TW			HW					
	1					.811					
	2					1					
	3					1					
	4					1					
	5					1					
	6					1					
	7					1					
	8					1					
	9					1					
	10					1					
Sum of Rdgs. (ΣR)											
Average Rdg. (R)						.811					
Gage Reading at Datum Z(±)						.423					
(R-Z)						.388					
*1/S (R-Z)						27.936					
Elev. of Datum (D)			773.0			773.0					
W. S. Elev. 1/S (R-Z) + D						800.936					

TVA 4232 (WCP-7-50)

Tennessee Valley Authority

Hydraulic Data Branch
Hydraulic Laboratory Section

Party JWB

Date 6-17-69

Computed Date

Checked BJC

Date 6-18-69

Sheet ___ of ___

Subject

Project

GAGE READINGS

Test No. 495

1' G.O.

Time	Rdg. No.	Weir Gage	Gage Reading (R) TW			HW					
	1					.930					
	2					0					
	3					0					
	4					0					
	5					0					
	6					0					
	7					0					
	8					0					
	9					0					
	10					0					
Sum of Rdgs. (ΣR)											
Average Rdg. (R)						.930					
Gage Reading at Datum Z(±)						.423					
(R-Z)						.507					
*1/S (R-Z)						36.504					
Elev. of Datum (D)			773.0			773.0					
W. S. Elev. 1/S (R-Z) + D						809.504					

SHEET _____ OF _____

PROJECT: TELLICO 2 1/8 B ORIFICE DATE _____

UNIT NO:

TEST NO: COMPUTED P.J.C. DATE 5-29-[illegible]

CHECKED _____ DATE _____

TIME	LT.	RT.	TIME	LT.	RT.	TIME	LT.	RT.	TIME	LT.	RT.
488	20.10	8.30				489	20.15	5.80			
	10	35					20	85			
	00	30					20	80			
	05	35					15	75			
	05	35					10	80			
	05	35					10	80			
	10	35					20	80			
	10	40					15	80			
	10	35					05	80			
	10	30					10	90			
	20.075	8.340		7,645			20.140	5.810		7,311	
	28.415		Q =	.17~~20~~38			25.950		Q =	.11~~[illegible]~~62	
490	20.50	2.10				491	-20.00	-1.25			
	50	10					00	20			
	40	10					00	30			
	50	10					.05	20			
	45	05					00	20			
	40	10					05	20			
	45	10					00	25			
	40	10					00	30			
	50	10					00	20			
	55	10					.05	25		6,216	
	20.465	2.095		6,814			-20.015	-1.235		.1413	
	22.560			Q = .15~~33~~49			18.780		Q =	~~.1398~~	
492	11.85	7.25				493	13.00	11.90			
	85	25					00	90			
	85	30					00	90			
	90	30					00	90			
	90	25					10	90			
	85	25					00	90			
	85	20					10	80			
	80	20					00	80			
	80	25					00	90			
	85	25					00	90			
	11.850	7.250		6,273			13.020	11.880		7,161	
	19.100		Q =	0.1426			24.900		Q =	.1628	

SHEET 2 OF 2

PROJECT: TELLICO 2 1/8 R ORIF DATE 6-16-69

UNIT NO:

TEST NO:

COMPUTED DATE

CHECKED JJC DATE 6-17-69

TIME	LT.	RT.	TIME	LT.	RT.	TIME	LT.	RT.	TIME	LT.	RT.
494	10.00	7.20				495	13.05	9.10			
	0	7.20					5	0			
	0	0					5	0			
	0	0					5	0			
	0	0					5	0			
	0	0					5	0			
	0	0					5	0			
	0	0					5	0			
	0	0					5	0			
	0	0					5	0			
	10.00	7.20		5,95	2 CFS		13.05	9.10		6,752	
	17.20		Q =	.1353			22.15		Q =	.1535	

TVA 4416 (REV. 8-48)

SHEET 1 OF 2

3' G.O.

$\frac{H_T}{H_K}$ vs $\frac{Q_T}{Q_F}$

COMPUTED

CHECKED JWB DATE 6/20/69 (8)

(1) Test No.	(2) HW El	(3) H	(4) $H^{3/2}$	(5) TW El	H_T	H_T / 60	H_T / H	(6) CL	(7) H − G.O.	(8) (H − 60)$^{3/2}$	(9) (H − 60)$^{5/2}$	(10) (H − 60)$^{3/2}$	(11) Q=	(12) Q_T	(13) Q_T / Q_F
		27.65						577.120	24.62						
324	800.68	22.66	107.898	766.03	-6.77	-2.256	.2985	575.74	24.65	122.374	23.009	2.765	12,110		.228
325	800.63	22.65	107.850	777.13	-1.87	-0.957	.0676		24.65	122.374	23.009	12.015			1.062
326	800.72	22.72	108.384	775.74	2.24	0.913	.0995		24.72	122.916	23.029	12.101			1.001
327	801.48	23.48	112.732	780.84	7.88	2.616	.3345		25.45	128.236	25.446	13.345			.906
328	801.15	23.15	111.373	777.25	4.35	1.417	.1510		25.15	126.137	23.218	13.195			.993
329	812.38	34.38	201.623	786.32	13.32	4.440	.3382		36.50	219.329	27.694	14.546			.823
330	814.90	41.90	271.230	788.84	15.84	5.279	.3280		38.90	242.649	28.601	15.022			.836
331	812.64	39.64	248.364	791.63	14.65	4.216	.4178	↓	41.64	265.679	29.555	15.523	↓		.730
322	794.52	21.82	101.925	771.34	-1.66	-0.553	.0761		18.82	81.645	20.240	10.631	10,630		.998
323	798.96	25.96	132.304	776.74	3.74	1.247	.1763		22.96	102.554	22.350	11.737			.945
324	809.66	29.66	161.531	789.58	6.58	2.193	.2730		26.66	132.656	23.826	12.511			.848
325	809.50	26.50	136.419	779.55	6.55	2.183	.2472		23.50	113.771	22.456	11.796			.900
326	806.26	33.26	191.411	786.16	13.10	4.366	.3938		30.26	166.458	25.567	13.431			.799
327	811.62	38.07	234.139	791.74	17.71	5.903	.4658		35.02	207.240	27.193	14.282			.745
328	816.20	43.20	284.133	794.33	23.33	7.776	.5338		40.20	259.652	29.281	15.382			.694
329	817.75	44.28	294.658	797.48	24.88	8.293	.5467	↓	41.28	270.056	29.602	15.548	↓		.684
380	785.77	18.77	62.624	781.78	9.28	2.926	.5567		12.77	46.658	16.991	8.924	6,280		.704
381	793.16	26.16	90.518	786.18	13.18	4.393	.6538		17.16	71.080	19.434	10.207			.615
382	799.21	36.21	134.188	790.01	14.01	6.336	.7753		23.21	111.816	22.369	11.749			.534
383	806.72	33.62	194.934	766.50	30.50	8.832	.7892	↓	30.62	169.276	25.503	13.394	↓		.469
393	806.91	33.48	193.513	774.63	-1.37	0.457	.0403	565.24	30.48	167.494	25.453	13.367	10,650		1.003
394	808.77	33.48	193.513	780.94	1.94	0.647	.0531		30.48	167.494	25.453	13.367			1.062
394	805.65	34.65	203.933	778.34	5.33	1.770	.1529		31.65	179.240	25.905	13.604			.918
395	814.15	41.15	263.830	792.30	9.36	3.120	.2273	↓	38.15	235.944	28.346	14.881	↓		.806
396	814.40	41.40	266.309	782.94	4.94	3.313	.2401		38.40	237.756	28.473	14.948			.904
397	812.10	39.10	244.492	780.68	2.63	2.543	.1951		36.10	216.991	27.597	14.492			.931
398	806.70	33.70	195.634	778.09	3.89	1.297	.1154		30.70	170.151	25.532	13.411			1.066
399	806.62	33.60	194.934	773.94	.94	0.313	.0250		30.60	169.271	25.493	13.390			1.005
400	817.57	44.57	292.553	785.60	12.60	4.200	.2927	↓	41.57	269.022	29.531	15.511	↓		.855

TVA 4890 (REV-8-60)

SHEET 2 OF 2

3' G.O.

$\frac{H_T}{H_K}$ vs $\frac{Q_T}{Q_F}$

COMPUTED ____ DATE ____

CHECKED JWB DATE 8/26/69

(1) Test No	(2) HG EL	(3) H	(4) $H^{3/2}$	(5) TW EL	H_T		(8) $\frac{H_T}{H}$	CL 9.35 (20)	(9) (H − GA)	(10) $(H - G.O.)^{1/2}$	(11) (4)×(10)	(12) QF (11)×(12)	(13) Q_T	(14) $\frac{Q_T}{Q_F}$
401	813.65	40.68	259.401	766.30	-6.70	-2.233	.1647	525.24	37.68	231.295	28.166	14,788 93	14,815	1.002
402	813.66	40.64	259.401	773.86	.86	0.287	.0211		37.68	231.295	28.166	14,788 93		1.002
403	814.83	41.83	270.540	779.12	6.12	2.040	.1463		38.83	241.964	28.576	15,009		.987
404	813.82	40.88	260.801	777.32	4.32	1.440	.1058		37.82	232.586	28.215	14,820		1.000
405	816.85	43.85	290.372	780.06	7.06	2.353	.1616		40.85	261.089	29.283	15,381		.963
406	817.24	44.24	294.254	780.34	7.34	2.447	.1659		41.24	264.237	29.417	15,451		.959
407	817.57	44.57	297.553	771.13	-1.87	-0.623	-.0419		41.57	268.022	29.531	15,511	15,523	1.001
408	817.57	44.57	297.553	774.44	1.44	0.480	.0323		41.57	268.022	29.531	15,511		1.001
409	817.64	44.64	298.254	777.76	4.76	.587	.1066		41.64	268.299	29.555	15,523		1.000
410	817.71	44.71	298.956	778.18	5.18	1.727	.1158		41.71	269.377	29.579	15,536		.999
	794	21.00	96.234	783.92	9.92	3.307	.472		18.00	76.368	17.87	10,436	7,732	.741
	798	25.00	125.00	787.15	14.15	4.717	.566	525.24	22.00	103.19	21.81	11,455	7,732	.625
	802	29.00	156.17	791.50	18.50	6.167	.638		26.00	132.57	23.60	12,396		.624
	806	33.00	189.57	795.47	22.47	7.490	.681		30.00	164.32	25.25	13,262		.583
	810	37.00	225.06	799.49	26.49	8.830	.716		34.00	198.25	26.81	14,081		.549
	814	41.00	262.53	803.34	30.34	10.113	.740		38.00	234.25	28.28	14,854		.520
	818	45.00	301.87	807.20	34.20	11.400	.760		42.00	272.19	29.68	15,589		.496
	798	25.00	125.00	782.65	9.65	3.217	.386		22.00	103.19	21.81	11,455	9,184	.802
	802	29.00	156.17	786.62	13.63	4.543	.470		26.00	132.57	23.60	12,396		.741
	806	33.00	189.57	790.85	17.85	5.950	.541		30.00	164.32	25.25	13,262		.692
	810	37.00	225.06	795.13	22.13	7.377	.598		34.00	198.25	26.81	14,081		.652
	814	41.00	262.53	799.44	26.44	8.813	.645		38.00	234.25	28.28	14,854		.618
	818	45.00	301.87	803.46	30.46	10.153	.677		42.00	272.19	29.68	15,589		.589
	794	21.00		778.82	5.82	1.940	.277					10,436		.880

TVA 400 (REV. 9-47)

Test Summary 5' G.O.

SHEET ____ OF ____

Tellico 1:72

COMPUTED JWB DATE 5-14-69

CHECKED BJC DATE 5-15-69

Test No.	Date	Time	G.O.	Model TW	Model HW	Model Q	Proto TW	Proto HW	43.988 Q	
321				.308	.648	.4235	795.18	819.66	⊙ 18	629
322				.263	.605	.4235	791.94	816.56	18	629
323				213	552	.4244	788.34	812.74	18	669
324				150	487	.4244	783.80	808.06	18	669
325				049	389	.4244	776.53	801.01	18	669
						.4240				
326				-0.074	.619	.5252	767.67	817.57	23	102
327				040	.619	.5254	775.88	817.57	△ 23	111
328				121	643	.5252	781.71	819.30	23	102
329				085	622	.5259	779.12	817.78	23	133
						.5254				
330				-0.074	.540	.4875	767.67	811.88	X 21	444
331				.022	.540	.4876	774.58	811.88	21	449
332				113	557	.4882	781.14	813.10	21	475
333				053	541	.4879	776.82	811.95	21	462
334				171	650	.4865	785.31	819.80	21	400
335				138	599	.4859	782.94	816.13	21	374
						.4873				
336				-0.091	.636	.5357	766.45	818.79	⊡ 23	564
337				-0.001	.637	.5362	772.93	818.86	23	586
338				041	637	.5377	775.95	818.86	23	652
339				088	638	.5385	779.34	818.94	23	688
340				102	641	.5367	780.34	819.15	23	608
						.5369				
341				.029	448	.4423	775.09	805.26	☒ 19	456
342				084	450	.4423	779.05	805.40	19	456
343				145	534	.4415	783.440	811.45	19	421
344				207	603	.4417	787.94	816.42	19	429
345				223	619	.4404	789.06	817.57	19	372
						.4446				

TVA 400 (REV. 9-47) Test Summary 5' G.O. SHEET 2 OF 2

Tellico 1:72

COMPUTED JWB DATE 5-15-69

CHECKED BJC DATE 5-23-69

Test No.	Date	Time	G.O.	Model TW	Model HW	Model Q	Proto TW	Proto HW		Q	
346				-0.002	.392	.4117	772.86	801.22	⊠	18	110
347				.062	392	.4116	777.46	801.22		18	105
348				.106	.415	.4120	780.63	802.88		18	123
349				.165	.503	.4112	784.88	809.22		18	088
						.4116					
351				051	340	0.3799	776.67	797.48	▽	16	711
352				-049	339	.3791	769.47	797.41		16	676
353				.098	364	.3873	780.06	799.21		17	037
354				154	455	.3883	784.09	805.76		17	081
355				216	520	.3873	788.55	810.44		17	037
356				270	575	.3867	792.44	814.400		17	010
357				338	.643	.3866	797.34	819.30		17	006
						.3850					
358				-0.046	.271	.3352	769.69	792.51	⊡	14	745
359				.071	273	.3352	778.11	792.66		14	745
360				.110	.321	.3393	780.92	796.11		14	925
361				208	445	.3422	787.93	805.04		15	053
362				.319	.558	.3387	795.97	813.18		14	899
363				396	634	.3389	801.51	818.65		14	908
						.3382					
364				.146	.295	.2730	783.51	794.24	*	12	009
365				.218	.369	.2723	788.70	799.57		11	978
366				.262	.418	.2753	791.86	803.10		12	110
367				339	495	.2750	797.41	808.64		12	097
368				382	539	.2748	800.50	811.81		12	088
						.2741					
369				.263	.277	.1281	791.94	792.94		5	635
370				.329	.366	.1309	796.69	799.35		5	758
371				420	457	.1309	803.24	805.90		5	758
						.1300					

TVA 490 (REV-9 67)

Test Summary 7' G.O. SHEET 1 OF 2

Tellico L.T.

COMPUTED JWB DATE 5-27-69

CHECKED RJC DATE 5-28-69

Test No.	Date	Time	G.O.	Model TW	Model HW	Model Q	Proto TW	Proto HW	Proto Q		
412				-0.058	.642	.7153	768.82	819.22	31	464	
413				.051	.642	.7119	776.67	819.22	31	315	
414				.113	.644	.7132	781.14	819.37	31	372	
415				.141	.654	.7142	783.15	820.09	31	416	
416				.120	.647	.7149	781.64	819.58	31	447	
						.7135					
417				.024	.551	.6535	774.73	812.67	28	746	
418				.059	.550	.6528	777.25	812.60	28	715	
419				.085	.550	.6542	779.12	812.60	28	777	
420				.121	.554	.6562	781.71	812.89	28	865	
421				.160	.593	.6539	784.52	815.70	28	764	
422				.144	.570	.6537	783.37	814.04	28	755	
423				.199	.659	.6533	787.38	820.45	28	737	
424				.170	.613	.6526	785.24	817.14	28	706	
						.6538					
425				-0.020	.465	.5950	771.56	806.48	26	173	
426				.042	.465	.5963	776.02	806.48	26	230	
427				.105	.469	.5952	780.56	806.77	26	182	
428				.160	.523	.5946	784.52	810.66	26	155	
429				.122	.473	.5966	781.78	807.06	26	243	
430				.147	.499	.5946	783.58	808.93	26	155	
431				.200	.583	.5940	787.40	814.98	26	129	
432				.169	.543	.5945	785.17	812.10	26	151	
433				.231	.617	.5936	789.68	817.42	26	111	
434				.251	.640	.5928	791.07	819.08	26	076	
						.5947					
435				-0.086	.386	.0534	766.81	800.79	23	494	
436				.028	.386	.0534	775.02	800.79	23	494	
437				.104	.391	.0535	780.49	801.15	23	534	
438				.153	.445	.0534	784.02	805.04	23	498	
439				.139	.418	.0534	783.01	803.10	23	516	
440				.203	.502	.0533	787.62	809.14	23	454	

TVA 500 (REV-9 57)

Test Summary 7' G.O. SHEET 2 OF 2

Tellico 1.72

COMPUTED JWB DATE 5-27-69

CHECKED RJC DATE 5-28-69

Test No.	Date	Time	G.O.	Model TW	Model HW	Model Q	Proto TW	Proto HW	Proto Q	
441				.164	.466	.5352	784.81	806.55	23	542
442				.215	.525	.5321	788.48	810.80	23	406
443				.249	.562	.5317	790.93	813.46	23	388
444				.286	.601	.5325	793.59	816.27	23	424
445				.338	.654	.5321	797.34	820.09	23	406
						.5330				
446			−	0.177	293	.4529	760.62	794.10	19	922
447			−	0.022	293	.4539	771.42	794.10	19	966
448				.112	.303	.4552	781.06	794.82	20	023
449				.074	.298	.4559	778.33	794.10	20	054
450				.143	.349	.4533	783.30	798.13	19	940
451				.197	.417	.4509	787.18	803.02	19	834
452				.257	.481	.4536	791.50	807.63	19	953
453				.339	.565	.4501	797.41	813.68	19	799
454				.433	.660	.4486	804.18	820.52	19	733
						.4526				
455				.174	.299	.3446	785.53	794.53	15	158
456				.237	.365	.3442	790.06	799.28	15	141
457				.284	.414	.3440	793.45	802.81	15	132
458				.338	.470	.3435	797.34	806.84	15	110
459				.387	.518	.3425	800.86	810.30	15	066
						.3438				
460				.264	.296	.1714	792.01	794.31	7	540
461				.311	.343	.1714	795.39	797.70	7	540
462				.373	.405	.1707	799.86	802.16	7	509
463				.412	.445	.1701	802.66	805.04	7	482
						.1709				

TVA 400 (REV-9-47) Test Summary 10' G.O. SHEET 1 OF 2

Tellico 1:72

COMPUTED JWB DATE 5-8-69

CHECKED [illegible] DATE [illegible]

JWB 43988 5-28-69

Test No.	Date	Time	G.O.	Model TW	Model HW	Model Q	Proto TW	Proto HW	Proto Q	
277				.145	.580	.905	783.44	814.76	39	809
278				.234	681	.900	789.85	822.03	39	589
279				193	609	.903	786.90	816.85	39	721
280				222	661	.903	788.98	820.59	39	721
281				022	~~552~~ 572	.903	774.58	~~811.30~~ 814.18	39	721
						.903			Avg	39712
282				-.046	.497	.833	769.69	808.78	36	642
283				132	500	.830	782.50	809.00	36	510
284				206	569	.828	787.83	813.97	36	422
285				148	504	.830	783.66	809.29	36	510
286				187	536	.830	786.46	811.59	36	510
287				286	672	.828	793.59	821.38	36	422
						.829			Avg 36	502
288				.002	.355	.6801	773.14	798.56	29	916
289				.129	363	.6792	782.29	799.14	29	877
290				030	356	.6804	775.16	798.63	29	929
291				.220	467	.6772	788.84	806.62	29	789
292				182	411	.6791	786.10	802.59	29	872
293				271	523	.6772	792.51	810.66	29	789
294				343	600	.6746	797.70	816.2	29	674
295				409	.668	.6742	802.45	821.10	29	657
						.679			Avg 29	813
296				-.041	.280	.5842	770.05	793.16	25	698
297				066	281	.5841	777.75	793.23	25	693
298				124	288	.5839	781.95	793.74	25	685
299				203	381	.5821	787.62	800.43	25	605
300				.153	307	.5835	784.02	795.10	25	667
301				268	451	.5817	792.30	805.47	25	588
302				339	528	.5802	797.41	811.02	25	522
303				406	.697	.5795	802.23	~~823.13~~ 815.18	25	491
						.582			Avg 25	619

TVA 588 (REV-9 57)

Test Summary 10' G.O. SHEET 2 OF 2

Tellico 1:72

COMPUTED JWB DATE 5-8-69

CHECKED BDL DATE 5-12-69

Test No.	Date	Time	G.O.	Model TW	Model HW	Model Q	Prodo TW	Prodo HW	Prodo Q	
304				.215	.284	.376	788.48	793.45	16	539
305				.272	.347	.3766	792.58	797.99	16	566
306				.329	.407	.375	796.69	802.30	16	496
307				.383	.462	.3755	800.58	806.26	16	517
						.376		Avg	16	530
308				.290	.322	.2451	793.98	796.18	10	781
309				.353	.387	.2453	798.42	800.86	10	790
310				.392	.427	.2492	801.22	803.74	10	962
						.246		Avg	10	844
311				-.059	.422	.7510	768.75	803.38	33	026
312				.043	.422	.7502	776.10	803.38	33	000
313				.121	.424	.7507	781.71	803.53	33	022
314				.180	.459	.7488	785.96	806.05	32	938
315				.249	.559	.7479	790.93	813.25	32	863
316				.208	.509	.7516	787.98	809.65	33	061
317				.295	.611	.7470	794.24	816.99	32	859
318				.389	.701	.7459	801.008	823.472	32	811
						.749		Avg	32	850
471				0.000	.624	.9547	773.00	817.93	41	995
472				.040	.624	.9537	775.880	817.93	41	951
473				.117	.625	.9507	781.42	818.00	41	819
474				.174	.636	.9546	785.53	818.79	41	991
475				.207	.671	.9513	787.90	821.31	41	846
						.953		Avg	41,	720

TVA 448 (REV-9 47)

Test Summary 15' G.O. SHEET 1 OF 2

Tellico 1.72

COMPUTED IWB DATE 5-6-69

CHECKED BJC DATE 5-7-69

Test No.	Date	Time	G.O.	Model TW	Model HW	Model Q		Prado TW	Prado HW	43988 Q	
227				-.182'	.382'	1.003'		759.90'	800.50'	44	120'
228				-.063'	.382'	1.003'		768.46'	800.50'	44	120'
229				.077'	.382'	1.003'		778.54'	800.50'	44	120'
230				.192'	.398'	1.004'		786.82'	801.66'	44	164'
231				.130'	386'	1.002'		782.36'	800.79'	44	076'
232				236'	437'	1.001'		787.99'	804.46'	44	032'
233				282'	502'	1.001'		793.30'	809.14'	44	032'
234				303'	534'	.998'		794.82'	811.45'	43	900'
235				356'	542'	.998'		798.63'	815.62'	43	900'
						1.001					
236				-.037'	427'	1.076'		770.34'	803.74'	47	331'
237				.042'	.427'	1.076'		776.02'	803.74'	47	331'
238				121'	428'	1.074'		781.71'	803.82'	47	243'
239				178'	435'	1.076'		785.82'	804.32'	47	331'
240				218'	452'	1.072'		788.70'	805.54'	47	155'
241				258'	507'	1.072'		791.58'	809.50'	47	155'
242				318'	587'	1.070'		795.90'	815.26'	47	067'
243				366'	640'	1.068'		799.35'	819.38'	46	979'
						1.064					
244				-.103'	.474'	1.153'		765.58'	807.13'	50	718'
245				.035'	474'	1.153'		775.52'	807.13'	50	718'
246				133'	477'	1.151'		782.58'	807.34'	50	630'
247				200'	488'	1.155'		787.40'	808.14'	50	806'
248				260'	547'	1.152'		791.72'	812.38'	50	674'
249				301'	609'	1.153'		794.67'	816.85'	50	718'
250				.363'	.684'	1.149'		799.14'	822.25'	50	542'
						1.157					
251				.013'	.532'	1.244'		773.94'	811.30'	54	721'
252				065'	533'	1.241'		777.68'	811.38'	54	589'
253				130'	534'	1.245'		782.36'	811.45'	54	765'
254				187'	540'	1.246'		786.46'	811.88'	54	809'
255				268'	609'	1.244'		792.30'	816.85'	54	721'

TVA 489 (REV-9-67) Test Summary 15' G.O. SHEET 2 OF 2

Tellico 1:72

COMPUTED JWB DATE 5-6-69

CHECKED BJC DATE 5-7-69

JWB 5-14-69

Test No.	Date	Time	G.O.	Model TW	Model HW	Model Q	Proto TW	Proto HW	Proto Q	
256				.239	.567	1.241	790.21	813.82	54	589
257				.315	.682	1.240	795.680	822.104	54	545
						1.243				
258				.033	.580	1.310	775.38	814.76	57	624
259				.124	580	1.309	781.93	814.76	57	580
260				.181	584	1.308	786.03	815.05	57	536
261				.235	605	1.308	789.92	816.56	57	536
262				279	667	1.308	793.09	821.02	57	536
						1.309				
263				.029	.310	0.876	775.09	795.32	38	533
264				141	318	0.876	783.15	795.90	38	533
265				203	343	0.877	787.62	797.70	38	577
266				253	414	0.878	791.22	802.81	38	621
267				294	467	0.876	794.17	806.62	38	533
268				331	510	0.876	796.83	809.72	38	533
						.876				
269				209	265	0.712	788.05	792.08	31	319
270				253	349	0.709	791.22	798.13	31	187
271				315	430	0.718	795.68	803.96	31	583
272				396	519	0.717	801.51	810.37	31	539
						.714				
273				413	479	0.~~543~~ 530	802.74	807.49	23	~~885~~ 314
274				371	435	0.~~545~~ 531	799.71	804.32	23	~~973~~ 358
275				.320	378	0.~~539~~ 530	796.04	800.22	23	~~710~~ 314
276	Avg	0.589		259	306	0.~~536~~ 525	791.65	795.03	23	~~578~~ 094
464				-0.082	.630	1.371	767.10	818.36	58	937
465				.011	.629	1.369	775.79	818.29	58	851
466			✓	071	.625	1.376	778.112	818.00	59	151
467				121	625	1.366	781.712	818.00	58	722
468			✓	122	~~619~~ 629	1.368	781.78	~~817.57~~ 818.29	58	808
469			✓	196	635	1.373	787.11	818.72	59	023

TVA 489 (REV-9 47)

Test Summary 20' G.O.

SHEET ____ OF ____

Tellico 1:72

COMPUTED BUC DATE 4-17-69

CHECKED JWB DATE 4-29-69

Test No.	Date	Time	G.O.	Model TW	Model HW	Model Q	Prod TW	Prod HW	43,948 Q
83	4-15-69	10:20	20'	.012	.400	1.312	773.864	801.800	57,712
84		10:40		.082	.401	1.313	778.704	801.872	57,756
85		11:10		.137	.404	1.311	782.864	802.088	57,668
86		11:50		.217	.422	1.316	788.624	803.384	57,888
87		1:00		.280	.460	1.310	793.160	806.126	57,624
88		1:40		.326	.523	1.309	796.472	810.656	57,580
89		2:15		.392	.606	1.302	801.224	816.632	57,272
						1.310			
90	4-16-69	8:35	20'	.132	.593	1.704	782.504	815.696	74,950
91		8:55		.064	.593	1.700	777.608	815.696	74,780
92		9:20		.166	.595	1.700 1.692	784.952	815.840	74,536
93		9:60		.236	.605	1.698	789.992	816.560	74,692
94		10:25		.319	.663	1.699	795.968	820.736	74,448
95		11:10		.281	.623	1.709	793.232	817.856	74,780
						1.700			
96	4-16-69	1:05	20'	.098	.542	1.600	780.056	812.024	70,384
97		1:30		.130	.543	1.601	782.360	812.096	70,425
98		1:50		.074	.542	1.601	774.728	812.024	70,425
99		2:15		.159	.544 .504	1.600	784.448	812.168	70,384
100		2:45		.224	.553	1.603	789.128	812.816	70,513
101		3:15		.287	.581	1.597	793.664	814.832	70,249
102		3:50		.331	.642	1.578	796.832	817.224	70,293
						1.600			
103	4-17-69	8:55	20'	.028	.484	1.478	775.016	807.848	65,014
104		9:25		.087	.484	1.483	779.264	807.848	65,234
105		9:50		.154	.489	1.486	784.088	808.208	65,366
106		10:20		.209	.495	1.482	788.048	808.640	65,190
107		10:50		.262	.513	1.484	791.864	809.936	65,278
108		11:20		.306	.556	1.463	795.032	813.032	65,234
109		11:45		.380	.659	1.477	800.360	820.448	64,970
						1.482			
110		VOID							
111	4-17-69	1135	20'	.104	.450	1.404	780.488	805.400	61,754
112		2:00		.063	.450	1.404	777.536	805.400	61,754
113		2:25		.147	.452	1.406	783.544	805.544	61,842

TVA 4UB (REV-9 47)

Test Summary 20' G.O.

SHEET ____ OF ____

Tellico Liz

COMPUTED BUC DATE 4-22-69

CHECKED JWB DATE 4-29-69

Test No.	Date	Time	G.O.	Model TW	Model HW	Model Q	Prado TW	Prado HW	Prado Q
114	4-27-69	2:50	20'	.211	.460	1.406	788.192	806.120	61,847
115		3:20		.293	.509	1.407	794.096	809.648	61.891
116		3:55		.339	.576	1.400	797.408	814.472	61.583
117		4:20		.402	.654	1.401	801.944	820.088	61.627
						1.404			
118	4-21-69	8:45	20'	.109	.340	1.177	765.152	797.480	51.774
119		9:10		.017	.340	1.180	774.224	797.480	51,906
120		9:30		.102	.341	1.178	780.344	797.552	51.818
121		9:45		.161	.343	1.180	784.592	797.696	51.906
122		10:20		.227	.349	1.176	789.344	798.128	51.730
123		10:55		.276	.406	1.179	792.872	802.232	51.862
124		11:25		.337	.476	1.170	797.764	807.848	51.466
125		11:45		.395	.565	1.170	401.440	813.680	51.466
						1.176			
126	4-21-69	1:05	20'	.037	.300	.956	770.336	794.600	42.052
127		1:35		.102	.300	.960	780.344	794.600	42.228
128		1:45		.162	.303	.946	784.664	794.896	41.613
129		2:05		.222	.311	.959	788.984	795.392	42.184
130		2:25		.289	.348	.964	793.808	798.056	42.404
131		2:50		.329	.424	.963	796.668	803.528	42.360
132		3:25		.400	.513	.962	801.800	809.936	42.316
						.958			
133	4-27-69	10:30	20'	.368	.424	.718	799.496	803.528	31.583
134		10:55		.404	.462	.719	801.872	806.264	31.627
135		11:30		.303	.343	.717	794.816	797.696	31.539
136		11:50		.336	.387	.718	797.192	800.264	31.583
						.718			
476				.012	.625	1.750	773.864	818.00	76, 976
477				.128	.625	1.749	782.22	818.00	76 935
478				.182	.627	1.746	786.10	818.14	76 803
479				.238	.635	1.746	790.14	818.72	76 803
480				.294	.656	1.744	794.17	820.23	76 715
						1.747			

TVA 489 (REV-5 47)

Test Summary 25' G.O.

SHEET ____ OF ____

Tellico 1:72

COMPUTED BJC DATE 4-23-69

CHECKED JWB DATE 4-30-69

Test No.	Date	Time	G.O.	Model TW	Model HW	Model Q	Prado TW	Prado HW	Prado Q
137	4-23-69	9:10	25'	-.011	.524	1.894	772.208	810.728	83.313
138		9:35		.084	.525	1.894	779.048	810.800	83,313
139		9:55		.038	.524	1.892	775.736	810.728	83,225
140		10,25		.148	.527	1.893	783.656	810.944	83,269
141		10:50		.227	.536	1.893	789.344	811.592	83,269
142		11:15		.290	.550	1.893	793.880	812.600	83,209
143		11:45		.382	.644	1.889	800.504	819.368	83,093
						1.892			
144	4-23-69	1:10	25'	.049	.619	2.114	776,528	817.568	92.991
145		1:35		.124	.619	2.122	781,928	817,568	93,342
146		2:05		.189	.624	2.118	786,608	817.928	93.166
147		2:55		.254	.633	2.115	791,288	818,576	93,035
148		3:20		.336	.670	2.113	797,192	821,240	92.947
	UNGATED					2.116			
149	4-24-69	8:30	25'	-.095	.345	1.191	766.160	797.840	52,390
150		9:00		.044	.345	1.187	776.168	797,840	52,214
151		9:30		.096	.346	1.194	779,912	797.912	52,522
152		9:50		159 .189	.347	1.191	~~786.608~~ 784.448	797,984	52,390
153		10:25		.227	.353	1.192	789.344	798,416	52,434
154		10:45		.273	.364	1.194	792.656	799.208	52,522
155		11:15		.343	.401	1.189	797,696	801,872	52,302
156		11:50		.378	.455	1.188	800,216	805,760	52,258
157		1:05		.401	.493	1.185	801,872	808.496	52,126
						1.190			
158	4-24-69	1:45	25'	.200	.330	1.071	787,400	796.760	47,111
159		2:05		.231	.334	1.070	789,632	797,048	47,067
160		2:35		.285	.352	1.069	793,520	~~800.~~ 798.344	47,023
161		3:25		.329	.380	1.069	796.688	800.360	46,979
162		3:46		.365	.409	1.067	799.280	802.448	46,935
163		4:15		.386	.449	1.066	800,792	805,328	46.891
						1.068			
164	4-25-69	9:30	25'	.058	.445	1.794	777.176	805.040	78.914
165		9:50		.118	.446	1.791	781,496	805,040	78.782
166		10:25		.173	.448	1.791	785.456	805.256	78,782

TVA 489 (REV. 9-47)

Test Summary 25' G.O.

SHEET _____ OF _____

Tellico 1-72

COMPUTED BJC DATE 4-25-69

CHECKED IWB DATE 4-30-69

Test No.	Date	Time	G.O.	Model TW	Model HW	Model Q	Prado TW	Prado HW	Prado Q
167	4-25-69	11:10	25'	.237	.490	1.787	790.064	808.280	78.606
168		11:40		.281	.515	1.786	793.232	810.080	78.562
169		1:05		.349	.568	1.784	798.128	813.896	78.474
170		1:45		.397	.634	1.785	800.584	817.648	78.518
						1.788			
171	4-25-69	2:45	25'	.074	.392	1.463	778.328	801.274	64,354
172		3:20		.124	.393	1.460	781.928	801.296	64,222
173		3:50		.178	.394	1.459	785.816	801.368	64,178
174		4:15		.234	.400	1.457	789.848	801.800	64,091
175	4-28-69	8:35		.237	.399	1.457	790.064	801.728	64,091
176		9:05		~~.287~~ .288	.408	1.458	~~794.384~~ 793.664	802.376	64,135
177		9:35		.326	.420	1.461	~~796.472~~ 795.752 OK	803.240	64,266
178		10:15		.363	.494	1.454	799.136	808.568	63.959
179		10:45		.404	.553	1.453	802.088	812.816	63.915
180		11:20		.386	.529	1.456	800.792	811.088	63.959
						1.458			
481				.029	.561	1.976	775.09	813.89	86 920
482				134	.561	1.975	782.65	813.89	86 876
483				.223	.569	1.974	789.06	813.97	86 832
484				.187	.565	1.980	786.46	813.68	87 096
485				.258	.575	1.981	791.58	814.40	87 140
486				.323	.609	1.976	796.26	816.85	86 920
487				.368	.654	1.971	799.50	820.09	86 700
						1.976			

TVA 4232 (WCP-7-50)

Tennessee Valley Authority

Hydraulic Data Branch
Hydraulic Laboratory Section

Party BJC

Date 9-23-69
Computed BJC
Date 9-23-69
Checked JWP
Date 9-24-69

Sheet ___ of ___

Subject ___

Project ___

GAGE READINGS

Test No. H96

25' G.O.
Under Gates

Time	Rdg. No.	Weir Gage	Gage Reading (R) HW			TW					
8:45	1		.849			3.514					
	2		49			3.514					
	3		49			3.514					
	4		49			3.514					
	5		49			3.514					
	6		49			14					
	7		49			14					
	8		49			14					
	9		49			14					
	10		49			14					
Sum of Rdgs. (ΣR)											
Average Rdg. (R)			.849			3.514					
Gage Reading at Datum Z(±)			.424			3.538					
(R-Z)			.426			-.024					
*1/S (R-Z)			30.600			-1.728					
Elev. of Datum (D)			773.0			773.0					
W. S. Elev. 1/S (R-Z) + D			803.600			771.272					

TVA 4232 (WCP-7-50)

Tennessee Valley Authority

Hydraulic Data Branch
Hydraulic Laboratory Section

Party BJC

Date 9-23-69
Computed BJC
Date 9-23-69
Checked LWE
Date 9-29-69

Sheet ___ of ___

Subject ___

Project ___

GAGE READINGS

Test No. 497

25' G.O.

Time	Rdg. No.	Weir Gage	Gage Reading (R)								
			HW								
9:05	1		.851			3.667					
	2		51			.667					
	3		51			.667					
	4		51			.667					
	5		51			.667					
	6		51			.667					
	7		51			.667					
	8		51			.667					
	9		51			.667					
	10		51			.667					
Sum of Rdgs. (ΣR)											
Average Rdg. (R)			.851			3.667					
Gage Reading at Datum Z(±)			.424			3.538					
(R-Z)			.427			.129					
*1/S (R-Z)			30.744			9.288					
Elev. of Datum (D)											
W. S. Elev. 1/S (R-Z) + D			803.744			782.288					

TVA 4232 (WCP-7-50)

Tennessee Valley Authority

Hydraulic Data Branch
Hydraulic Laboratory Section

Party BJC

Date 9-23-69
Computed BJC
Date 9-23-69
Checked KHB
Date 9-24-69

Sheet ____ of ____

Subject ____

Project ____

GAGE READINGS

Test No. 498

25'6.0

Time	Rdg. No.	Weir Gage	Gage Reading (R) HW			Gage Reading (R) TW					
9'20	1		.849			3.610					
	2		49			10					
	3		49			10					
	4		49			10					
	5		49			10					
	6		49			09					
	7		49			09					
	8		50			09					
	9		49			09					
	10		49			09					
Sum of Rdgs. (ΣR)											
Average Rdg. (R)			.849			3.610					
Gage Reading at Datum Z(±)			.424			3.538					
(R-Z)			.425			072					
*1/S (R-Z)			30.600			6.184					
Elev. of Datum (D)											
W. S. Elev. 1/S (R-Z) + D			803.600			778.184					

TVA 4232 (WCP-7-50)

Tennessee Valley Authority

Hydraulic Data Branch
Hydraulic Laboratory Section

Party BJC

Date 7-23-69
Computed BJC
Date 9-23-69
Checked JWR
Date 9-24-69

Sheet ____ of ____

Subject ____

Project ____

GAGE READINGS

Test No. 499

25'6.0

Time	Rdg. No.	Weir Gage	Gage Reading (R) HW			Gage Reading (R) TW					
	1		852			3714					
	2		52			14					
	3		52			14					
	4		52			14					
	5		52			14					
	6		52			14					
	7		52			14					
	8		52			14					
	9		52			14					
	10		52			14					
Sum of Rdgs. (ΣR)											
Average Rdg. (R)			.852			3.714					
Gage Reading at Datum Z(±)			.424			3.538					
(R-Z)			.428			.176					
*1/S (R-Z)			30.816			12.673					
Elev. of Datum (D)											
W. S. Elev. 1/S (R-Z) + D			803.816			785.672					

785

TVA 4232 (WCP-7-50)

Tennessee Valley Authority

Hydraulic Data Branch
Hydraulic Laboratory Section

Party BJC

Sheet ____ of ____

Date 9-23-69
Computed BJC
Date 9-23-69
Checked JWB
Date 9-24-69

Subject ____

Project ____

GAGE READINGS

Test No. 500

25' G.O.

Time	Rdg. No.	Weir Gage	Gage Reading (R)								
			HW								
10:20	1		.855			3.761					
	2		55			61					
	3		55			61					
	4		55			61					
	5		55			61					
	6		53			61					
	7		53			61					
	8		55			61					
	9		55			61					
	10		55			61					
Sum of Rdgs. (ΣR)											
Average Rdg. (R)			.855			3.761					
Gage Reading at Datum Z(±)			.424			3.538					
(R-Z)			.431			.223					
*1/S (R-Z)			31.032			16.056					
Elev. of Datum (D)											
W. S. Elev. 1/S (R-Z) + D			804.032			789.056					

TVA 4232 (WCP-7-50)

Tennessee Valley Authority

Hydraulic Data Branch
Hydraulic Laboratory Section

Party BJC

Date 9-23-69
Computed BJC
Date 9-23-69
Checked HWB
Date 9-24-69

Sheet ___ of ___

Subject ___

Project ___

GAGE READINGS

Test No. 501

25' G.O.
on 2+3 and Right half of 1

Time	Rdg. No.	Weir Gage	Gage Reading (R)								
			HW			TW					
10:50	1		.869			3.811					
	2		69			11					
	3		69			11					
	4		69			11					
	5		69			11					
	6		69			11					
	7		69			11					
	8		69			11					
	9		69			11					
	10		69			11					
Sum of Rdgs. (ΣR)			~~.869~~			~~3.811~~					
Average Rdg. (R)			.869			3.811					
Gage Reading at Datum Z(±)			.424			3.538					
(R-Z)			.445			.273					
*1/S (R-Z)			32.040			19.656					
Elev. of Datum (D)											
W. S. Elev. 1/S (R-Z) + D			805.040			792.656					

TVA 4232 (WCP-7-50)

Tennessee Valley Authority

Hydraulic Data Branch
Hydraulic Laboratory Section

Party BJC

Date 9-23-69
Computed BJC
Date 9-23-69
Checked JWP
Date 9-24-69

Sheet ___ of ___

Subject ___

Project ___

GAGE READINGS

Test No. 502

25' G.O.

1 - Almost all 2 + 3 fully Coated

Time	Rdg. No.	Weir Gage	Gage Reading (R)								
	1		.895			3.837					
	2		95			37					
	3		95			37					
	4		95			37					
	5		95			37					
	6		95			38					
	7		95			38					
	8		95			38					
	9		95			38					
	10		95			38					
Sum of Rdgs. (ΣR)											
Average Rdg. (R)			.895			3.838					
Gage Reading at Datum Z(±)			.424			3.538					
(R-Z)			.471			.300					
*1/S (R-Z)			33.912			21.600					
Elev. of Datum (D)			773.0			773.0					
W. S. Elev. 1/S (R-Z) + D			806.912			794.600					

TVA 4232 (WCP-7-50)

Tennessee Valley Authority

Hydraulic Data Branch
Hydraulic Laboratory Section

Party BJC

Sheet ___ of ___

Date 9-23-69
Computed BJC
Date 9-23-69
Checked JWR
Date 9-24-69

Subject ___

Project ___

GAGE READINGS

Test No. 503

25'6.0

Time	Rdg. No.	Weir Gage	Gage Reading (R) HW									
	1		.920			3.862						
	2		.920			62						
	3		20			62						
	4		21			62						
	5		21			62						
	6		21			62						
	7		21			62						
	8		21			62						
	9		21			62						
	10		21			62						
Sum of Rdgs. (ΣR)												
Average Rdg. (R)			921			3.862						
Gage Reading at Datum Z(±)			.424			3.538						
(R-Z)			.497			.324						
*1/S (R-Z)			35.784			23.328						
Elev. of Datum (D)			773.0			773.0						
W. S. Elev. 1/S (R-Z) + D			808.784			796.328						

TVA 4232 (WCP-7-50)

Tennessee Valley Authority

Hydraulic Data Branch
Hydraulic Laboratory Section

Party BJC

Sheet ___ of ___

Date 9-23-69
Computed BJC
Date 9-23-69
Checked JWE
Date 9-24-69

Subject ___

Project ___

GAGE READINGS

Test No. 804

25' G.O.

Time	Rdg. No.	Weir Gage	Gage Reading (R) HW			TW					
	1		.952			3.890					
	2		52			90					
	3		52			90					
	4		52			90					
	5		52			90					
	6		52			90					
	7		52			90					
	8		52			90					
	9		52			90					
	10		52			90					
Sum of Rdgs. (ΣR)											
Average Rdg. (R)			.952			3.890					
Gage Reading at Datum Z(±)			.424			3.538					
(R-Z)			.528			.352					
*1/S (R-Z)			38.016			25.344					
Elev. of Datum (D)			773.0			773.0					
W. S. Elev. 1/S (R-Z) + D			811.016			798.344					

TVA 4232 (WCP-7-50)

Tennessee Valley Authority

Hydraulic Data Branch
Hydraulic Laboratory Section

Party BJC

Date 9-23-69
Computed BJC
Date 9-23-69
Checked JWE
Date 9-24-69

Sheet ____ of ____

Subject ____

Project ____

GAGE READINGS

Test No. 515

25' G.O.

Time	Rdg. No.	Weir Gage	Gage Reading (R)								
	1		1.005			3.926					
	2		05			26					
	3		05			26					
	4		05			26					
	5		05			26					
	6		06			26					
	7		06			26					
	8		06			26					
	9		06			26					
	10		06			26					
Sum of Rdgs. (ΣR)											
Average Rdg. (R)			1.006			3.926					
Gage Reading at Datum Z(±)			.424			3.538					
(R-Z)			.582			.388					
*1/S (R-Z)			41.904			27.936					
Elev. of Datum (D)			773.0			773.0					
W. S. Elev. 1/S (R-Z) + D			814.904			800.936					

SHEET ____ OF ____

PROJECT:

DATE

UNIT NO:

TEST NO: 476 - 501 C "B COMPUTED BJC DATE 9-23-69

CHECKED JWP DATE 9-24-69

TIME	LT.	RT.	TIME	LT.	RT.	TIME	LT.	RT.	TIME	LT.	RT.
496	16.90	16.45				497	17.10	16.45			
	.95	40					16.90	45			
	17.15	35					17.10	50			
	.20	35					16.90	40			
	.10	40					17.15	45			
	.15	30					17.00	40			
	.10	40					16.95	50			
	.10	30					17.10	40			
	16.95	40					16.90	50			
	17.15	40					17.00	50			
	17.075	16.375		73,328 ✓			17.015	16.465		73,328 ✓	
	33.450			1.667 ✓			33.470			1.667 ✓	
498	17.10	16.45				499	16.80	16.40			
	10	40					80	40			
	20	35					90	35			
	15	45					95	60			
	16	40					90	45			
	00	40					85	45			
	10	45					80	50			
	05	40					80	55			
	05	35					70	50			
	00	50					85	40			
	17.090	16.415		73,372			16.845	16.460		73,152	
	33.505			1.668 ✓			33.305			1.663 ✓	
500	16.80	16.50				501	16.90	16.40			
	70	45					85	40			
	75	50					85	50			
	70	50					85	50			
	75	55					80	45			
	80	45					80	60			
	85	40					75	50			
	85	50					75	45			
	80	50					80	60			
	85	55					85	50			
	16.785	16.490		73,108			16.820	16.490		73,152	

SHEET _____ OF _____

PROJECT: _____ DATE _____

UNIT NO:

TEST NO: 502 - 505 6 "B COMPUTED RJC DATE 9-23-69

CHECKED JWB DATE 9-24-69

TIME	LT.	RT.	TIME	LT.	RT.	TIME	LT.	RT.	TIME	LT.	RT.
502	16.80	16.55				503	16.75	16.50			
	75	55					75	45			
	85	50					70	50			
	75	50					80	45			
	70	45					75	55			
	75	40					80	45			
	75	45					85	40			
	80	45					75	50			
	80	50					75	60			
	80	50					80	55			
	16.775	16.485		73,108 ✓			16.770	16.495		73,108 ✓	
	33.260 ✓			1.662 ✓			33.265			1.662 ✓	
504	16.75	16.40				505	16.70	16.45			
	70	50					75	50			
	75	50					75	50			
	70	45					80	45			
	65	50					70	55			
	75	55					70	40			
	70	55					75	50			
	75	50					75	45			
	75	45					70	45			
	70	50					70	55			
	16.720	16.490		73,064 ✓			16.730	16.480		73,064 ✓	
	33.210 ✓			1.661 ✓			33.210 ✓			1.661 ✓	
										Avg Q	
										73,178 ✓	

Test Summary 30' G.O. 1 2

Tellico [illegible]

COMPUTED JWB DATE 5-2-6

CHECKED BJC DATE 5-[illegible]

Test No.	Date	Time	G.O.	Model TW	Model HW	Model Q	Proto TW	Proto HW	Proto Q
									43988
181	4-29			.078	.475	1.992	778.69	807.20	87624
182	"			.027	.475	1.997	774.94	807.20	87844
183	"			.157	.477	1.993	784.30	807.34	87,668
184	"			.223	.480	1.995	789.06	807.56	87756
185	"			.264	.484	1.997	792.01	807.85	87844
186	"			.324	.495	1.994	796.33	808.64	87,712
187	4-30			.378	.509	1.996	800.22	809.65	87,800
						1.995			
188	4-30			.054	.499	2.161	776.89	808.93	95058
189	"			.106	.501	2.163	780.63	809.07	95146
190				.022	.499	2.161	774.58	808.93	95058
191				.150	.500	2.167	783.86	809.00	95322
192				.213	.503	2.156	788.39	809.22	94838
193				.280	.509	2.158	793.16	809.65	94926
194				.335	.519	2.154	797.120	810.37	94750
195				.375	.577	2.153	800.00	814.54	94706
196				.414	.622	2.156	802.81	817.78	94838
						2.159			
197	5-1			.060	.625	2.497	777.32	818.00	109838
198	"			.165	.629	2.502	784.88	818.29	110058
199	"			.124	.626	2.509	781.93	818.07	110366
200	"			.240	.638	2.503	790.28	818.94	110102
201	"			.310	.659	2.502	795.32	820.45	110278
						2.504			~~43~~ 110128 Avg
202	5-1			.102	.540	2.451	780.34	811.88	106935
203	"			.157	.594	2.422	784.30	815.77	106539
204	"			.050	.583	2.432	776.600	814.98	106979
205	"			.007	.583	2.432	773.50	814.98	106979
206	"			.109	.588	2.435	780.85	815.34	107111
207	"			.198	.601	2.436	787.26	816.27	107155
						2.431			

VOID

Test Summary 30' GATE OPENING — 2 — 2

Tailrace Line

COMPUTED JWB DATE 5-5-69

CHECKED [illegible] DATE 5-6-69

Test No.	Date	Time	G.O.	Model TW	Model HW	Model Q	Prado TW	Prado HW	Q	JWB 5-14-69
208	5-1			.254'	.611'	2.428	791.23'	816.99'	106	803
209	"			326'	.637'	2.426	796.47'	818.86'	106	451
210	"			276'	.619'	2.428	792.87'	817.57'	106	853
211	5-1			+.007'	539'	2.439	772.50'	800.81'	107	287
212	"	AVG Q		146'	595'	2.435	783.51'	815.84'	107	HI
213	"	pH 31		.219'	.607'	2.435	788.77'	816.70'	107	HI
214	"			-.019'	.515'	2283	771.63'	810.08'	100	425
215	"			094'	.516'	2.289	779.77'	810.15'	100	689
216	"			183'	518'	2.286	786.18'	810.30'	100	557
217	"			266'	524'	2.291	792.15'	810.73'	100	777
218	"			315'	570'	2.280	795.68'	814.04'	100	293
219	"			343'	595'	2.284	797.70'	815.84'	100	469
220	"			382'	.621'	2.280	800.56'	817.71'	100	293
221	"			281'	.525'	2.288	793.23'	810.80'	100	645
						2.285				

TVA 4232 (WCP-7-50)

Tennessee Valley Authority

Hydraulic Data Branch
Hydraulic Laboratory Section

Party BJC

Date 5-2-69
Computed JWB
Date 5-2-69
Checked B.C.
Date 5-5-69

Sheet ___ of ___

Subject ___

Project Tellico

GAGE READINGS

Test No. 222

35' G.O.
Nappe Touching Gate #3

Time	Rdg. No.	Weir Gage	Gage Reading (R) TW			Gage Reading (R) HW					
9:20	1		3.579			1.042					
	2		79			42					
	3		79			42					
	4		79			42					
	5		79			42					
	6		79			42					
	7		79			42					
	8		79			42					
	9		79			42					
	10		79			42					
Sum of Rdgs. (ΣR)											
Average Rdg. (R)			3.579			1.042					
Gage Reading at Datum Z(±)			3.537			423					
(R-Z)			.042			.619					
*1/S (R-Z)			3.024			44.568					
Elev. of Datum (D)			773.0			773.0					
W. S. Elev. 1/S (R-Z) + D			776.024			817.568					

TVA 4232 (WCP-7-50)

Tennessee Valley Authority

Hydraulic Data Branch
Hydraulic Laboratory Section

Party BJC

Date 5-7-69
Computed JWR
Date 5-7-69
Checked BJC
Date 5-5-69

Sheet ___ of ___

Subject ___

Project Tellico

GAGE READINGS

Test No. 223

35' G.O.
Nappe Touching Gate # 3

Time	Rdg. No.	Weir Gage	Gage Reading (R) TW			Gage Reading (R) HW					
9:40	1		3.639			1.043					
	2		39			43					
	3		39			42					
	4		39			47					
	5		39			42					
	6		39			43					
	7		39			43					
	8		39			43					
	9		39			43					
	10		39			43					
Sum of Rdgs. (ΣR)											
Average Rdg. (R)			3.639'			1043'					
Gage Reading at Datum Z(±)			3.537			423					
(R-Z)			.102'			.620'					
*1/S (R-Z)			7.344'			44.640'					
Elev. of Datum (D)			773.0			773.0					
W. S. Elev. 1/S (R-Z) + D			780.344'			817.640'					

TVA 4232 (WCP-7-50)

Tennessee Valley Authority

Hydraulic Data Branch
Hydraulic Laboratory Section

Party BJC

Date 5-2-69
Computed JWB
Date 5-2-69
Checked BJC
Date 5-6-69

Sheet ___ of ___

Subject ___

Project ___

GAGE READINGS

Test No. 224

35' G.O.
Nappe Touching Grade 3

Time	Rdg. No.	Weir Gage	Gage Reading (R)								
			TW			MW					
10:20	1		3.706			1.045					
	2		06			45					
	3		06			45					
	4		06			45					
	5		06			45					
	6		06			44					
	7		06			45					
	8		06			45					
	9		06			45					
	10		06			45					
Sum of Rdgs. (ΣR)											
Average Rdg. (R)			3.706'			1.045'					
Gage Reading at Datum Z(±)			3.537			423					
(R-Z)			.169'			622'					
*1/S (R-Z)			12.168'			44.784'					
Elev. of Datum (D)			773.0			773.0					
W. S. Elev. 1/S (R-Z) + D			785.168'			817.784'					

TVA 4232 (WCP-7-50)

Tennessee Valley Authority

Hydraulic Data Branch
Hydraulic Laboratory Section

Party BJC

Date 5-7-69
Computed JWB
Date 5-2-69
Checked BVC
Date 5-5-69

Sheet ___ of ___

Subject ___

Project Tellico

GAGE READINGS

Test No. 225

35' 6.0
Water Touching All Gates

Time	Rdg. No.	Weir Gage	Gage Reading (R)								
10:45	1		3.761			1.048					
	2		61			48					
	3		61			48					
	4		61			48					
	5		61			48					
	6		62			48					
	7		62			47					
	8		62			48					
	9		62			47					
	10		63			48					
Sum of Rdgs. (ΣR)											
Average Rdg. (R)			3.762			1.048					
Gage Reading at Datum Z(±)			3.537			.423					
(R-Z)			.225			.625					
*1/S (R-Z)			16.200			45.000					
Elev. of Datum (D)			773.0			773.0					
W. S. Elev. 1/S (R-Z) + D			789.200			818.000					

TVA 4232 (WCP-7-50)

Tennessee Valley Authority

Hydraulic Data Branch
Hydraulic Laboratory Section

Party BJC

Date 5-2-67
Computed JWB
Date 5-2-67
Checked
Date

Sheet ___ of ___

Subject

Project

GAGE READINGS

Test No. 226

35' S.O.
Water on gates and starting to flow over Nov overflow section

Time	Rdg. No.	Weir Gage	Gage Reading (R)									
11:15	1		3.833			1.121						
	2		33			1.121						
	3		33			21						
	4		33			21						
	5		33			22						
	6		33			22						
	7		33			22						
	8		33			22						
	9		33			22						
	10		33			23						
Sum of Rdgs. (ΣR)												
Average Rdg. (R)			3.833			1.122						
Gage Reading at Datum Z(±)			3.537			423						
(R-Z)			.296			.699						
*1/S (R-Z)			21.312			50.328						
Elev. of Datum (D)			773.0			773.0						
W. S. Elev. 1/S (R-Z) + D			794.312			823.328						

SHEET _____ OF _____

PROJECT:

DATE _____

UNIT NO:

TEST NO: 222-226 8½ B ORIF COMPUTED JWB DATE 5-2-69

CHECKED RWL DATE 5-5-69

TIME	LT.	RT.	TIME	LT.	RT.	TIME	LT.	RT.	TIME	LT.	RT.
222	9.60	13.50				223	9.40	13.50			
	00	50					60	40			
	50	60					45	65			
	60	40					40	50			
	30	50					50	60			
	70	35					25	40			
	40	50					50	50			
	50	40					65	60			
	40	40					40	35			
	55	40					40	40			
	9.525	13.505					9.455	13.510			
	23.030'		Q =	3.035'			22.965'		Q =	3031'	
224	9.50	13.40				225	9.60	13.50			
	70	45					70	45			
	65	30					50	30			
	70	40					20	40			
	80	40					75	75			
	90	30					55	20			
	75	50					90	40			
	60	35					70	35			
	95	40					65	25			
	95	55					45	30			
	9.750	13.405					9.645	13.340			
	23.155'		Q =	3.042'			22.985'		Q =	3032'	
226	9.70	13.20									
	90	20									
	65	10									
	75	30									
	75	05									
	65	75									
	90	05									
	80	00									
	65	20									
	60	10									
	9.735	13.145									

TELLICO DAM

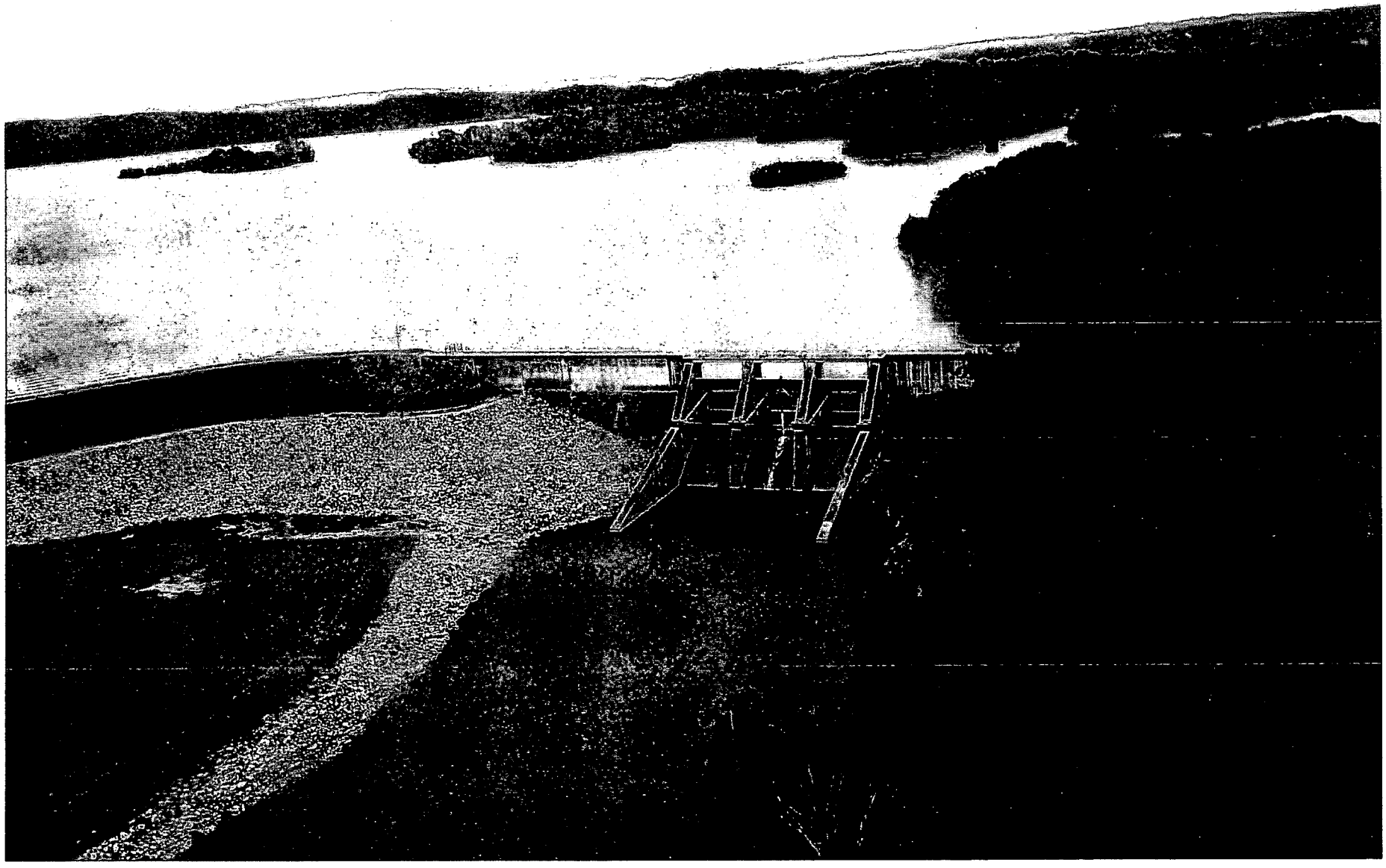

July 1998

EMBANKMENT PORTION OF MAIN DAM

July 1998

RESERVOIR OPERATION OVERVIEW

Tellico Dam is a multipurpose tributary project located on the Little Tennessee River near its confluence with the Tennessee River, immediately downstream of Fort Loudoun Dam. Although the original planning of Tellico Dam dates back to the late 1930's,(then referred to as the Fort Loudoun extension), the project was not completed until forty years later (dam closure in December, 1979). Tellico is unique among tributary projects because it is connected via an unregulated canal to Fort Loudoun Lake, and thus its annual operating scheme is the same as Fort Loudoun, a main river lake. Tellico provides a marked navigation channel for 20 miles up the Little Tennessee River, and also provides flood protection for downstream sites, including Chattanooga, Tennessee . Although there are no power generating facilities at Tellico Dam, most of the water is diverted through the canal into Fort Loudoun Lake, and thus the flow regulation provided by Tellico Lake significantly increases hydroelectric production at Fort Loudoun Dam. Tellico is also one of the few major multipurpose projects which has an original project allocation for economic development and recreation.

Table of Contents

Tellico Reservoir Vicinity Map 5
Figure 1: Site Plan 6
Figure 2: General Plan 7
Figure 3: Downstream Elevation 8
Figure 4: Section A-A 9
Figure 5: Section B-B & C-C 10
Location 11
Chronology 11
Project Cost 11
Streamflow 11
Reservoir 12
Tailwater 12
Head (Gross) 13
Reservoir Adjustments 13
Navigation Facilities 13
Lock 13
Figure 6: Canal between Ft.Loudoun and Tellico Lakes (Photo) 15
Dams
Main Dam 14
Saddle Dams 16
Power Facilities
Power Production Plant 16
Auxiliary Electric Power (tentative data) 16
Electric Controls 17
Reservoir and Power Data 18
Spill Compilations 19
Maximum & Minimum Elevations 20
Tellico Operating Guide 21
Reservoir Areas and Volumes 22
Natural and Reservoir Flow Profiles 23
Tailwater Rating Curves 24
Safety Modifications for Probable Maximum Flood 25
Chronology 25
Cost of Modifications 25
Controlling Features 25
Modifications for Probable Maximum Flood 25
Figure 7: Safety Modifications for Probable Maximum Flood (Photo) .. 26
Figure 8: Typical Section Ungated Spillway at Saddle Dam No.1 27
Construction Data
Quantities (estimated) 28
Construction Force Report 29

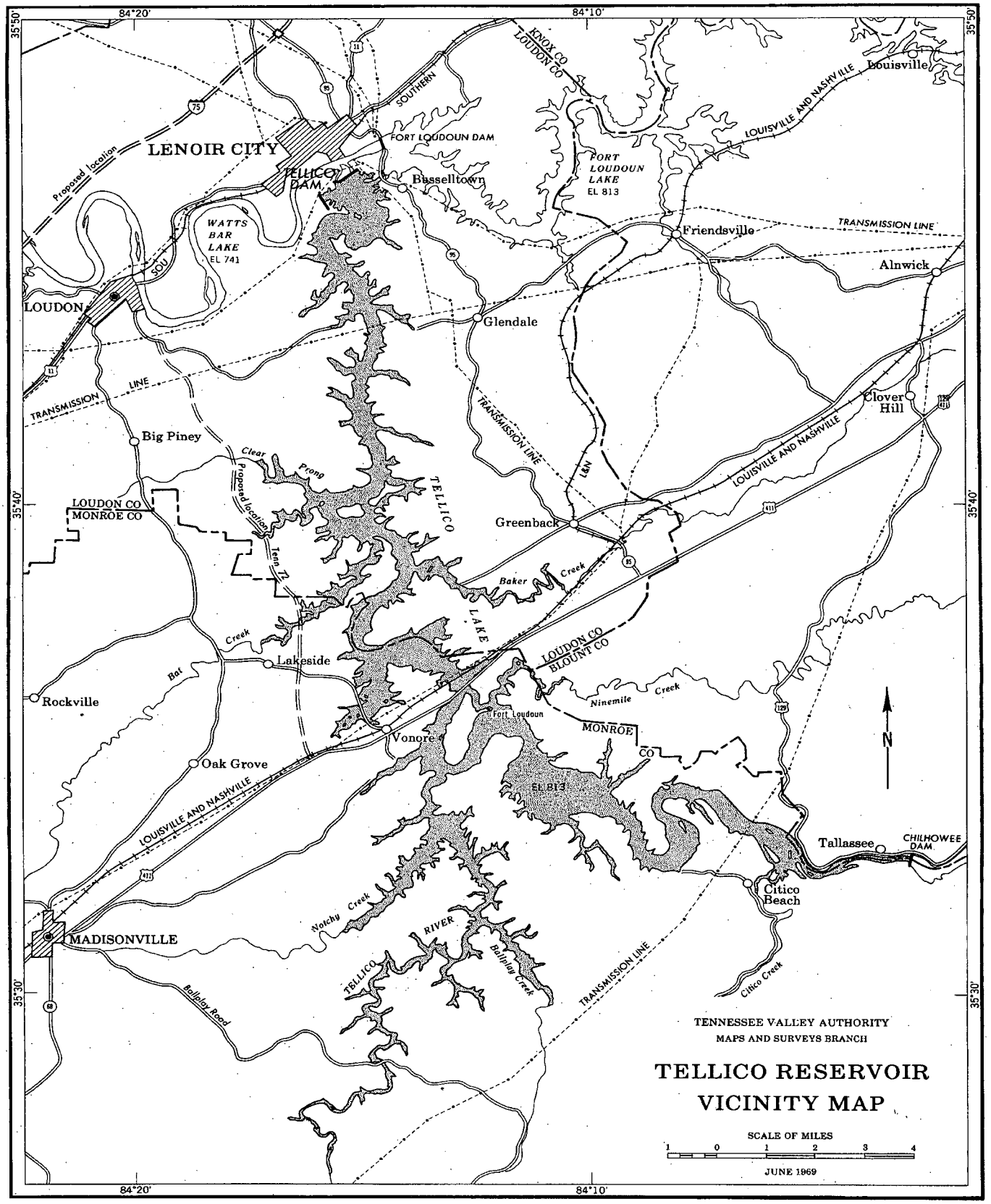
84°20'
84°10'
35°50'
35°40'
35°30'
LENOIR CITY
TELLICO DAM
FORT LOUDOUN DAM
Proposed location
SOUTHERN
KNOX CO
LOUDON CO
Louisville
LOUISVILLE AND NASHVILLE
FORT LOUDOUN LAKE EL 813
Busselltown
WATTS BAR LAKE EL 741
Friendsville
TRANSMISSION LINE
Alnwick
LOUDON
Glendale
TRANSMISSION LINE
Clover Hill
Big Piney
Clear Prong
Proposed location
LOUDON CO
MONROE CO
Tenn 72
TELLICO LAKE
Greenback
L&N
LOUISVILLE AND NASHVILLE
Baker Creek
Bat Creek
Lakeside
Rockville
LOUDON CO
BLOUNT CO
Ninemile Creek
Fort Loudoun
Vonore
MONROE CO
Oak Grove
EL 813
LOUISVILLE AND NASHVILLE
Tallassee
CHILHOWEE DAM
Citico Beach
Notchy Creek
RIVER
TELLICO
Bullplay Creek
MADISONVILLE
Baileyton Road
TRANSMISSION LINE
Citico Creek
N
TENNESSEE VALLEY AUTHORITY
MAPS AND SURVEYS BRANCH
TELLICO RESERVOIR
VICINITY MAP
SCALE OF MILES
1 0 1 2 3 4
JUNE 1969

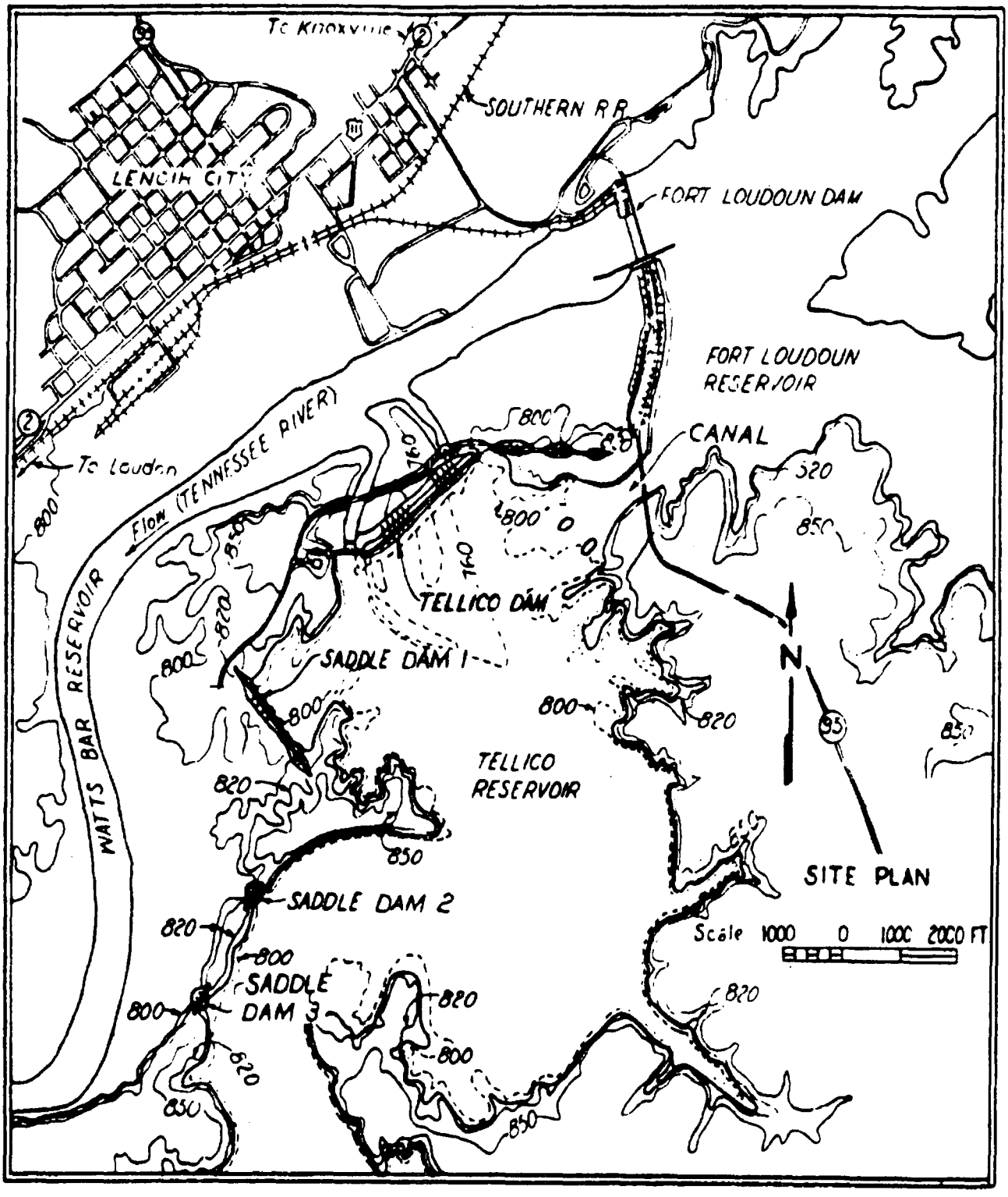

FIGURE 1
Site Plan

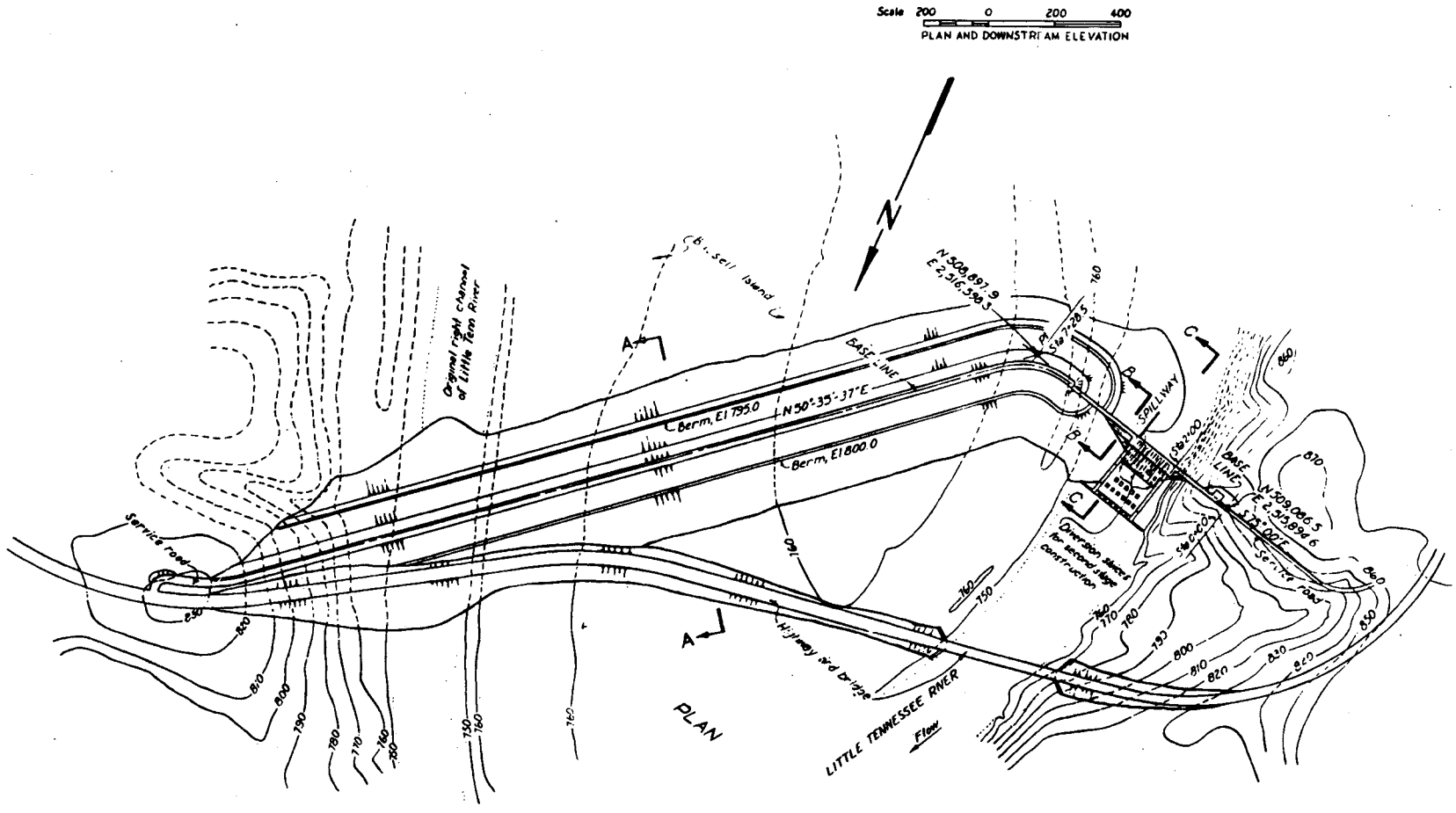
Scale 200 0 200 400
PLAN AND DOWNSTREAM ELEVATION
N
Original right channel of Little Tenn River
Berm, El 795.0
N 50°-35'-37" E
Berm, El 800.0
BASE LINE
SPILLWAY
Service road
Diversion sluices for second stage construction
Highway and bridge
LITTLE TENNESSEE RIVER
Flow
PLAN

FIGURE 2

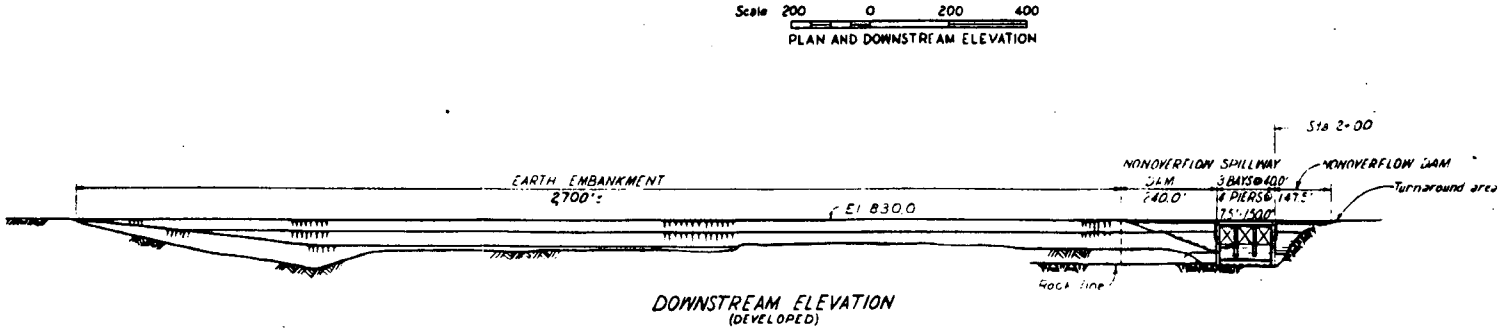
Scale 200 0 200 400
PLAN AND DOWNSTREAM ELEVATION
Sta 2+00
NONOVERFLOW SPILLWAY
NONOVERFLOW DAM
EARTH EMBANKMENT
2700'±
EL 830.0
240.0'
3 BAYS @ 40.0'
4 PIERS @ 14.5'
75'-1500'
Turnaround area
DOWNSTREAM ELEVATION
(DEVELOPED)

FIGURE 3

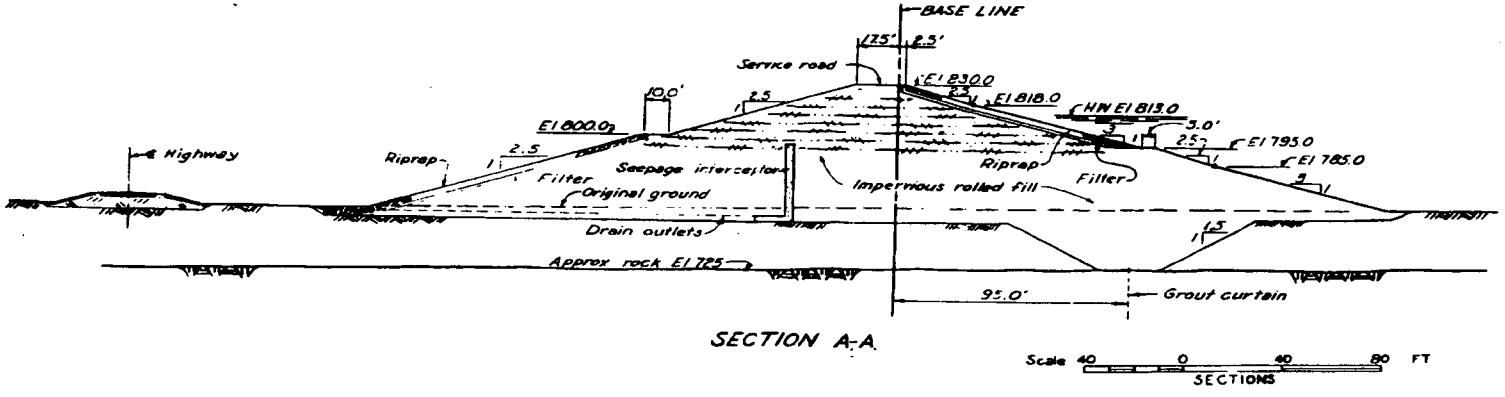
BASE LINE
Service road
E1 830.0
E1 818.0
HW E1 813.0
E1 800.0
Highway
Riprap
Filter
Original ground
Seepage interceptor
Impervious rolled fill
Drain outlets
Approx rock E1 725
Grout curtain
95.0'
SECTION A-A
Scale 40 0 40 80 FT
SECTIONS

FIGURE 4

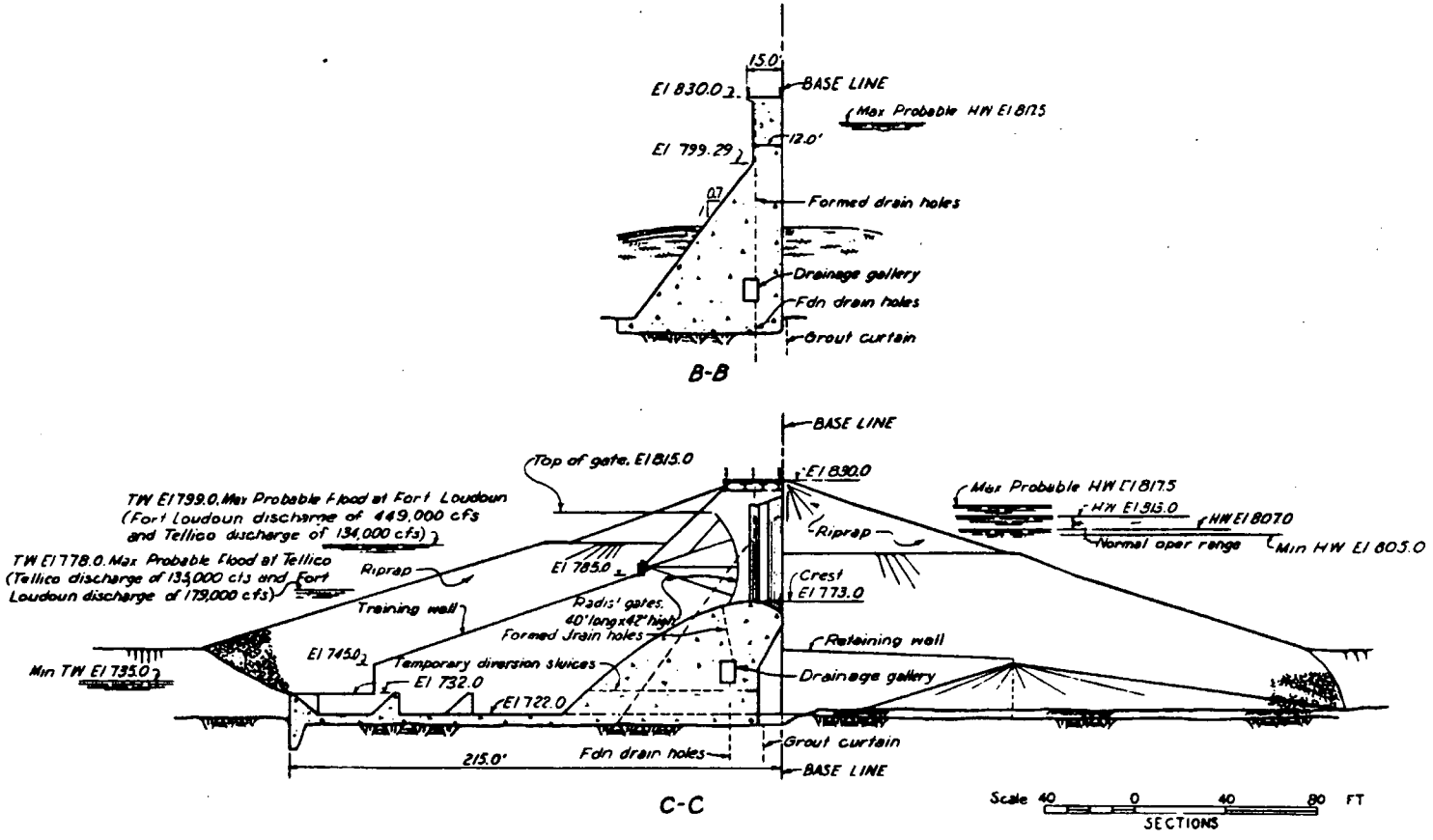
15.0'
El 830.0
BASE LINE
Max Probable HW El 817.5
El 799.29
12.0'
0.7
Formed drain holes
Drainage gallery
Fdn drain holes
Grout curtain
B-B
BASE LINE
Top of gate, El 815.0
El 830.0
TW El 799.0, Max Probable Flood at Fort Loudoun
(Fort Loudoun discharge of 449,000 cfs
and Tellico discharge of 134,000 cfs)
TW El 778.0, Max Probable Flood at Tellico
(Tellico discharge of 135,000 cfs and Fort
Loudoun discharge of 179,000 cfs)
Riprap
El 785.0
Max Probable HW El 817.5
HW El 815.0
HW El 807.0
Normal oper range
Min HW El 805.0
Riprap
Crest
El 773.0
Training wall
Radial gates,
40' long x 42' high
Formed drain holes
Retaining wall
El 745.0
Temporary diversion sluices
El 732.0
Min TW El 735.0
Drainage gallery
El 722.0
Grout curtain
215.0'
Fdn drain holes
BASE LINE
C-C
Scale 40 0 40 80 FT
SECTIONS

FIGURE 5

TELLICO PROJECT

SUMMARY OF PRINCIPAL FEATURES

LOCATION

On Little Tennessee River arm of Watts Bar Reservoir, 0.3 mile above. confluence with the Tennessee River; in Loudoun County, Tennessee; 33.2 miles downstream from Chilhowee Dam (ALCOA); adjacent to left embankment of Fort Loudoun Dam, whose reservoir connects with Tellico Reservoir by means of a canal; 1 air mile southeast of Lenoir City, Tennessee; 23 air miles southwest of Knoxville, Tennessee.

NOTE

Elevations are based on the U. S. C. & G. S. 1929 General Adjustment.

CHRONOLOGY

Initial appropriation by congress	October 15,1966
Authorized by TVA Board of Directors	November 8,1966
Construction started (dam site)	March 7,1967
Construction suspended(dam site)	February 28,1969
Construction started (reservoir)	July 1,1969
Closure	November 29,1979

PROJECT COST

Initial project	$137,123,000
Safety Modifications for Probable Maximum Flood	$2,960,000
Total Cost of Project	$140,083,000

STREAMFLOW

Drainage area above dam:

Total	2627 sq. miles
Uncontrolled (below Fontana Dam)	1056 sq. miles

Gaging station discharge records (for complete records see Hydraulic Data Branch files):

McGhee, October 1904 to date; drainage area .. 2443 sq. miles

Maximum known flood at dam site, estimated (March 1867):

Natural	153,000 cfs
Regulated	119,000 cfs

Maximum probable flood on Little Tennessee River, regulated ..... 284,000 cfs (131,000 at Tellico and 153,000 through canal to Fort Loudoun)

STREAMFLOW (CONT.)

Flood at Tellico, regulated, from maximum probable flood on Tennessee River (69,000 cfs through canal to Tellico, plus contribution from Little Tennessee River) ..... 126,000 cfs
Average unregulated flow at dam site, estimated (1921-1967) ..... 5700 cfs

RESERVOIR

Counties affected:
State of Tennessee ..... Loudon, Monroe, Blount
Reservoir land at September 1998:
Fee simple ..... 12,904 ac.
Easement ..... None
Total ..... 12,904 ac.
Transferred /sold ..... 11,428 ac.
Operating levels at dam:
- Probable maximum flood(PMF)elevation ..... el. 828.6
- 500 Year flood elevation ..... el. 817
- 100 Year flood elevation ..... el. 816.2
- Winter flood guide level ..... el. 807
- Summer flood guide level ..... el. 813
- Maximum used for design ..... el. 817.5
- Maximum probable (126,000 cfs) ..... el. 817.8
- Top of gates (area 17,300 ac.) ..... el. 815
- Normal minimum pool ..... el. 807
- Normal operation:
  - Full pool (area 16,500 ac.) ..... el. 813
  - Minimum for navigation, flat pool (area 14,200 ac.); (same El. as Fort Loudon Reservoir) ..... el. 807

Backwater ,length at full pool ..... 33.2 miles
Length of shoreline at El. 813: Main shore ..... 302 miles
Islands ..... 8 miles
Total ..... 310 miles
Original river area (El.820) ..... 2133 ac.
Storage (flat pool assumption):
- Total volume at El. 815 ..... 447,300 ac.-ft
- Controlled flood storage (El. 815-807) ..... 126,000 ac.-ft

TAILWATER

Maximum probable flood on Tennessee River ..... El. 800
Maximum used for design ..... El. 799
Maximum used for design (maximum probable flood on Little Tennessee River, regulated) ..... El. 778
Maximum known flood (March 1867) ..... El. 786
Minimum level ..... El. 735

HEAD (gross)

Maximum static (el. 815-735) ..... 80 ft
Minimum during maximum probable regulated flood on Tennessee River (el. 817.8-800) ..... 17.8 ft

RESERVOIR ADJUSTMENTS

Land required ..... 37,900 ac.
Land clearing ..... 2200 ac.
Highways :
- Access ..... 1.3 miles
- State ..... 32.2 miles
- County and tertiary ..... 50.5 miles
- Total ..... 84.0 miles

Railroads:
- Access ..... None
- Other ..... 3 miles
- Total ..... 3 miles

Bridges (highway ,13; railroad, 1) 14
Utilities adjusted or constructed (approx.) ..... 212 miles*
Families relocated 276
Graves removed 1300
*Includes power , transmission, and telephone lines and gas pipe lines.

NAVIGATION FACILITIES

Lock
(use Fort Loudoun lock by passage through canal)

Lock chamber, clear ..... 60 by 360 ft
Lift: Maximum (El. 735-815) ..... 80 ft
Normal (El. 741-813) ..... 72 ft

NAVIGATION FACILITIES (CONT.)

Canal from Fort Loudoun Reservoir

Length , excavated (approx.) ..... 1000 ft
Width at, El. 807 (minimum Fort Loudoun level for navigation) ..... 602 ft
Bottom width ..... 500 ft
Bottom elevation ..... el. 790
Bridge over canal (see Figure 6) 5-span continuous curved girders, 30-ft roadway, 3° curve, 1135-ft total length; main span provides 200-ft horizontal and 42-ft vertical navigation clearance above El. 813

Navigation Channel

Length of channel for 9-ft navigable depth:
- Little Tennessee River ..... 30.0 miles
- Tellico River (limited by bridge clearance) ..... 3.5 miles
- Total ..... 33.5 miles

Minimum pool to maintain 9-ft navigable depth ..... El. 807

DAMS

MAIN DAM

Material and type ..... Concrete gravity nonoverflow dam and spillway; impervious rolled earthfill embankment
Lengths:
- Nonoverflow dam, left ..... 147.5 ft
- Spillway ..... 150 ft
- Nonoverflow dam, right ..... 240 ft
- Earth embankment ..... 2700 ft
- Total ..... 3237.5 ft

Maximum height, foundation to deck level (at deepest excavation) ..... 129 ft
Maximum width at base:
Spillway section only ..... 86 ft
Including apron ..... 205 ft
Deck level ..... el. 830
Top of earth embankment ..... el. 830
Outlet facilities:
- Spillway clear opening (3 openings at 40 ft) ..... 120 ft
- Spillway crest level ..... el. 773
- Crest gates ..... 3 radial gates 40 ft wide, 42 ft high, separated by 7.5-ft-thick piers
- Gate hoists ..... Three 72-ton-capacity fixed hoists
- Spillway capacity, HW El. 817.8, TW El. 800 ..... 126,000 cfs

Service road ..... 14 ft wide, on dam
Foundation ..... Limestone and shale of the Sevier formation

Canal between Ft.Loudoun and Tellico Lakes

Figure 6

DAMS (CONT.)

Note: Normal operation of Tellico Reservoir is for all flows except major floods to pass through canal and discharge at Fort Loudoun project and for Tellico spillway to discharge major flood flow only after Fort Loudoun spillway discharge is high, creating high tailwater necessary for Tellico spillway satisfactory operation.

SADDLE DAMS

Location ..... Left rim; No. 1, 2500 ft southwest of left abutment of dam; No. 2, 3 000 ft south of No. 1; No. 3, 1500 ft south of No. 2

Material and type ..... Impervious rolled earthfill embankments

Dam No.	1	2	3
Length, feet	2160	470	350
Maximum height, feet	36	21	32
Top elevation	830	830	830
Top width, feet	14	14	14

Total length, feet 2980

Foundations ..... Earth, overlying limestone and shale of the Sevier formation

POWER

Power Production Plant

None. Under normal conditions, flow from the Little Tennessee River will be diverted into Fort Loudoun Reservoir and thence through the Fort Loudoun turbines to generate an estimated 200 million kwh of energy annually.

Auxiliary Electric Power

See 15NW500 R1

4160v, 3 ph, Supplied by Fort Loudoun Electric Cooperative through fuses

TVA transformers...One 3 ph, 6KVA,1-31 , 4160 - 200/120V Hwy 95 Bridge LTG. 30KVA ,1-31,4160 - 208/120V Fisherman Toilet, 30KVA,1-31,4160V-208/120V Beach Toilet Bldg.,3KVA,1-10,4160V - 240/120V Headwater Gauge House LTG., 3KVA,1-10,4160V-240/120V Launching Ramp LTG.,75KVA,1-31,4160V-480V- Spillway 480V CAB used for spillway gates, gauges drainage pumps, Dam LTG, and Visitors overlook LTG.

POWER (CONT.)

ELECTRIC CONTROLS

Spillway gates locally controlled, with provision for future control from Fort Loudoun Dam.

RESERVOIR AND POWER DATA - TELLICO

Pool Elevation (feet)	Area (acre *1000)	Volume (ac-ft *1000)	Potential EIS* (gWh)
815	16.62	424.0	47.3
814	15.95	407.7	40.8
813	15.56	392.0	34.5
812	15.30	376.6	28.4
811	15.01	361.4	22.4
810	14.70	346.6	16.6
809	14.37	332.0	10.9
808	14.01	317.8	5.4
807	13.64	304.0	.0

** EIS represents energy in storage, and includes production at all downstream plants through Kentucky Dam.*

Tellico Spill Compilation

Volumes are average daily in day-second-feet, except as shown.
Maximum spill, date of maximum, and number of days of spill in each spill period, in this order. "Total Days" is for calendar years and does not always equal the sum of the days in periods because of extension of periods into adjacent years.
All spill is through the spillway.
Maximum hourly average discharge to date was 7,301 cfs at 10 p.m. on 5/7/84.

YEAR	MAXIMUM AVERAGE DAILY DISCHARGE (TURBINE + SPILL)	DATE	NUMBER OF PERIODS	TOTAL DAYS	
1979			0		
1980			0		
1981			0		
1982			0		
1983			0		
1984	7301	5/8	1	3	7301---5/8---3
1985			0		
1986			0		
1987			0		
1988			0		
1989			0		
1990			0		
1991			0		
1992			0		
1993			0		
1994	25458	3/28	1	2	25458---3/28---2
1995			0		
1996			0		
1997			0	0	
1998	14054	4/19	2	4	14054---4/19---2; 5308---8/11---2

RIVER SYSTEM OPERATIONS

TVA OPERATED RESERVOIR SYSTEM
ANNUAL MAXIMUM AND MINIMUM ELEVATIONS, IN ORDER OF MAGNITUDE
FROM DATE OF RESERVOIR CLOSURE THROUGH 1998

TELLICO

MAXIMUM					MINIMUM				
ORDER	ELEVATION	YEAR	MONTH	DAY	ORDER	ELEVATION	YEAR	MONTH	DAY
1	816.20	1994	MAR.	28	1	806.96	1980	JAN.	14
2	815.37	1984	MAY	8	2	807.16	1984	FEB.	27
3	815.09	1998	APR.	19	3	807.30	1997	FEB.	17
4	814.93	1989	JUNE	17	4	807.31	1985	JAN.	11
5	814.72 %	1997	JUNE	14	5	807.33	1987	MAR.	27
6	813.57	1983	APR.	23	6	807.35	1994	MAR.	7
7	813.49	1982	AUG.	1	7	807.36	1983	DEC.	18
8	813.42	1990	MAY	4	8	807.37	1989	DEC.	3
9	813.42	1996	AUG.	1	9	807.41	1982	DEC.	27
10	813.40	1981	JUNE	7	10	807.41	1991	DEC.	19
11	813.38	1987	MAY	22	11	807.42	1993	FEB.	15
12	813.35	1991	DEC.	2	12	807.44	1981	FEB.	26
13	813.26	1988	AUG.	19	13	807.45	1986	MAR.	7
14	813.26	1995	OCT.	10	14	807.45	1998	FEB.	6
15	813.25	1986	AUG.	15	15	807.48	1992	JAN.	15
16	813.24	1993	JULY	28	16	807.52	1990	MAR.	2
17	813.23	1992	AUG.	29	17	807.55	1988	JAN.	27
18	813.21	1980	JULY	30	18	807.79	1995	JAN.	23
19	813.21	1985	OCT.	22	19	807.81	1996	FEB.	16

* CLOSURE DECEMBER 24, 1979
% MIDNIGHT ELEVATION
TOP-OF-GATES ELEVATION 815

TELLICO OPERATING GUIDE

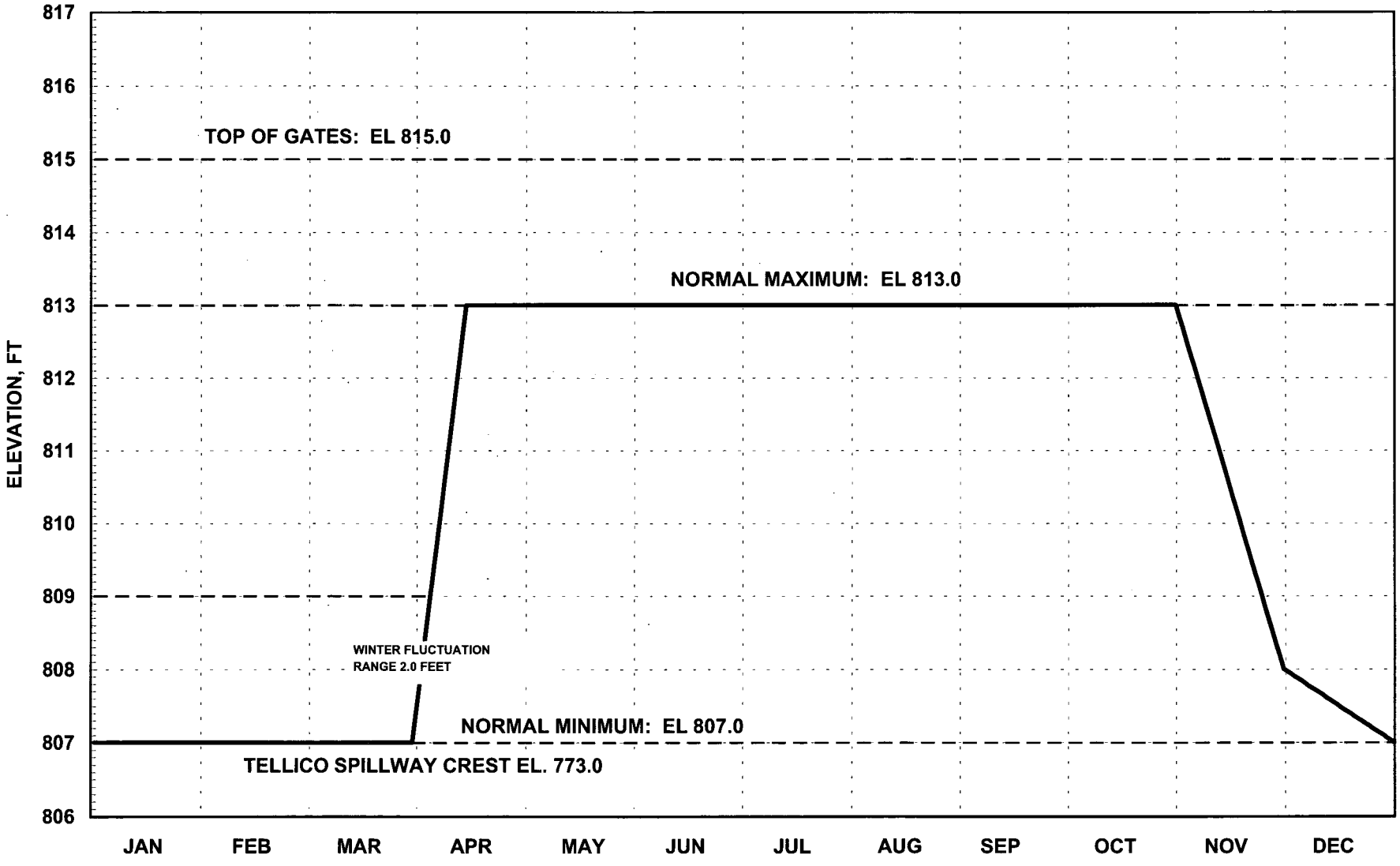

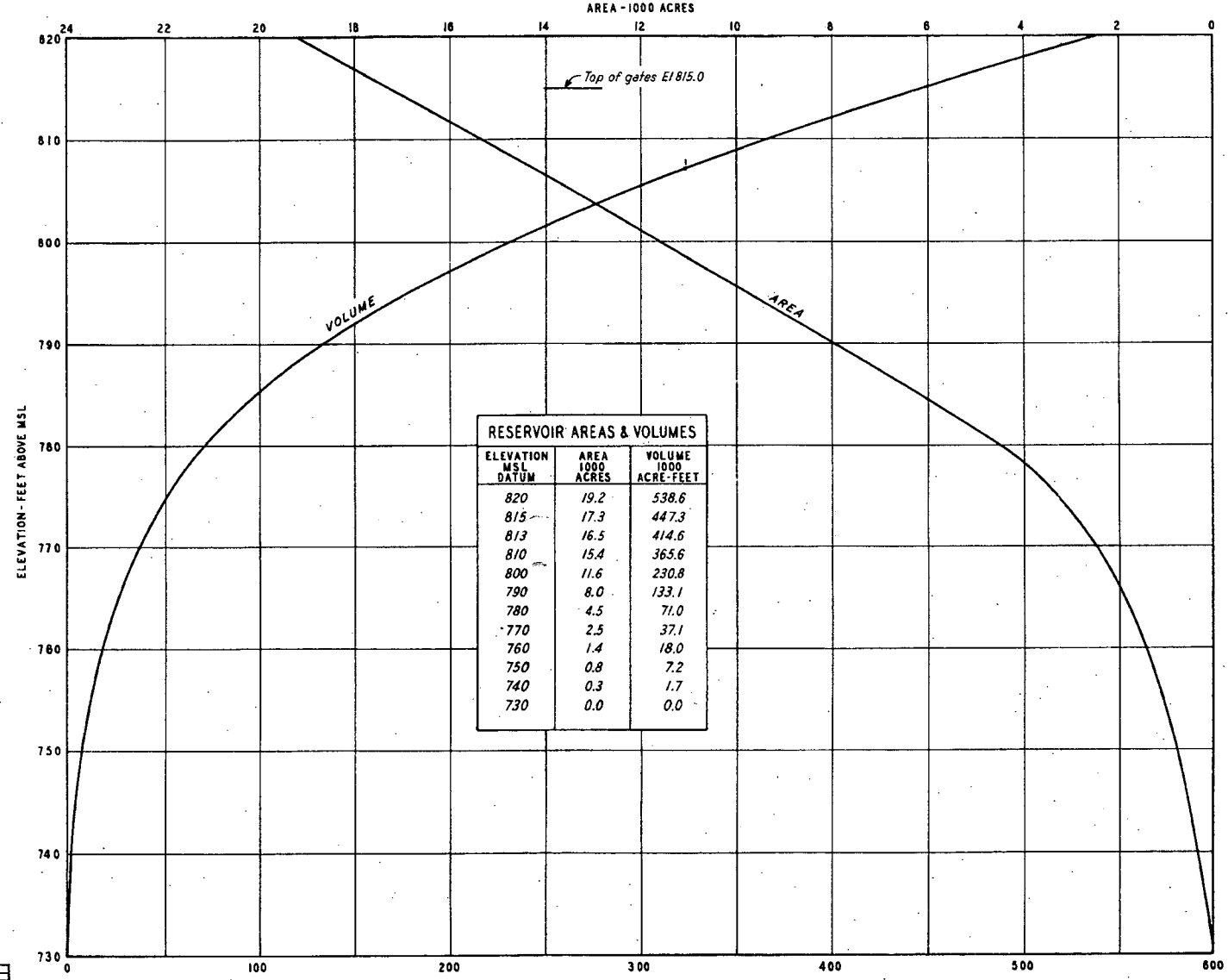

RESERVOIR AREAS & VOLUMES

ELEVATION MSL DATUM	AREA 1000 ACRES	VOLUME 1000 ACRE-FEET
820	19.2	538.6
815	17.3	447.3
813	16.5	414.6
810	15.4	365.6
800	11.6	230.8
790	8.0	133.1
780	4.5	71.0
770	2.5	37.1
760	1.4	18.0
750	0.8	7.2
740	0.3	1.7
730	0.0	0.0

NOTES:
Areas obtained by planimeter from USGS-TVA topographic maps, scale 1"=2000'; contour interval 20'.
Drainage area at site = 2,627 square miles.
Area of original river within reservoir to Chilhowee Dam = 2,133 acres.

THIS DRAWING SUPERSEDES PPI-321G348

LITTLE TENNESSEE RIVER-MI. 0.3

RESERVOIR AREAS AND VOLUMES

TELLICO PROJECT
TENNESSEE VALLEY AUTHORITY
DIVISION OF WATER CONTROL PLANNING

SUBMITTED: Wm E. Loose | RECOMMENDED: Don H Mattern | APPROVED: R. L. Ellis

KNOXVILLE | 9-23-99 | IDA | PP | 1 | 321C751

REV NO	DATE	MADE	CHKD	SUPV	INSP

DRWN WRP | COMPUTED
TRCD WHO | ENGINEER
CHKD RSM | J S Royal

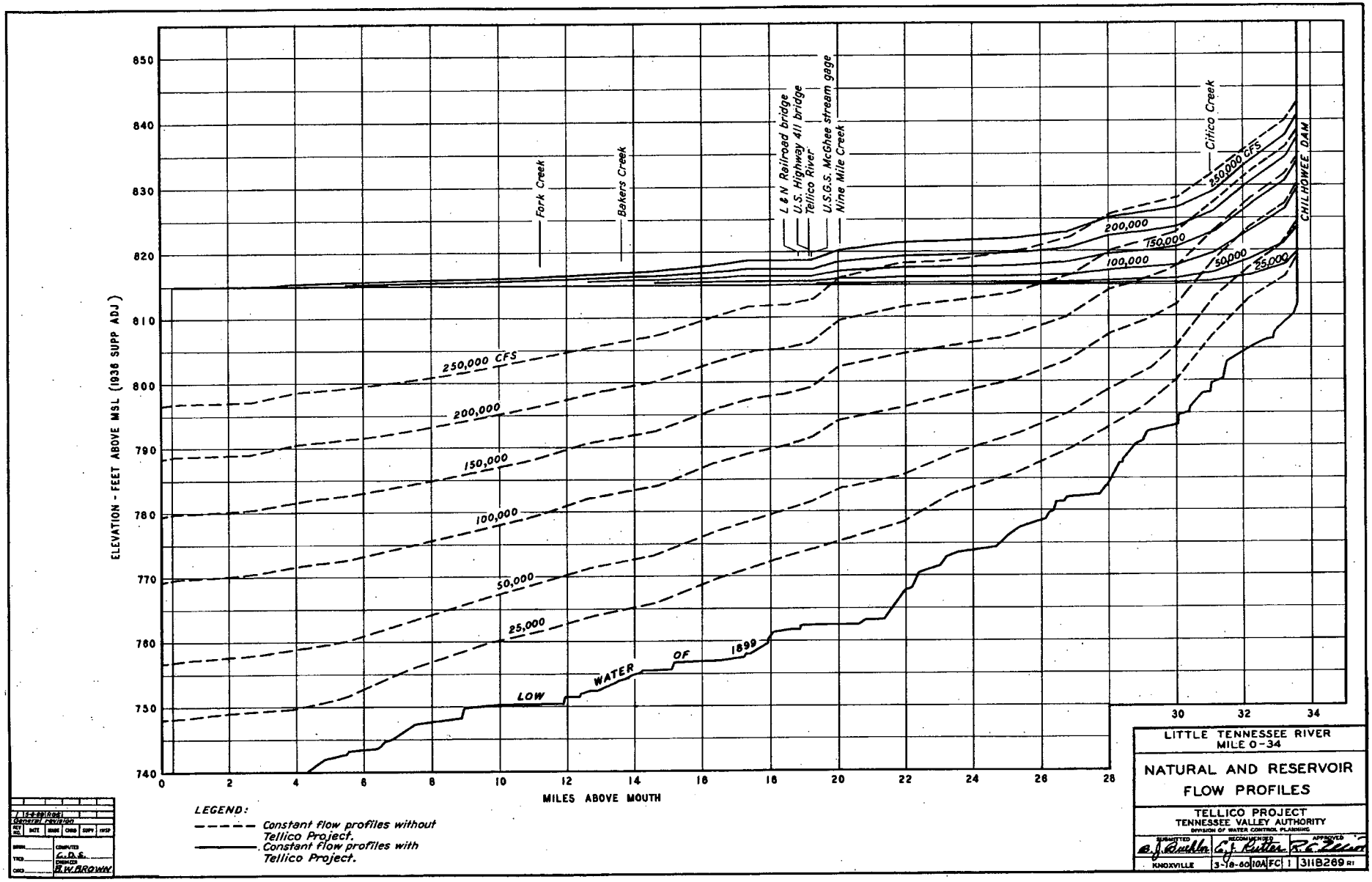
ELEVATION - FEET ABOVE MSL (1936 SUPP ADJ.)
MILES ABOVE MOUTH
Fork Creek
Bakers Creek
L & N Railroad bridge
U.S. Highway 411 bridge
Tellico River
U.S.G.S. McGhee stream gage
Nine Mile Creek
Citico Creek
CHILHOWEE DAM
250,000 CFS
200,000
150,000
100,000
50,000
25,000
LOW WATER OF 1899
LEGEND:
Constant flow profiles without Tellico Project.
Constant flow profiles with Tellico Project.
LITTLE TENNESSEE RIVER MILE 0-34
NATURAL AND RESERVOIR FLOW PROFILES
TELLICO PROJECT
TENNESSEE VALLEY AUTHORITY
DIVISION OF WATER CONTROL PLANNING
KNOXVILLE 3-19-60 10A FC 1 311B269 R1

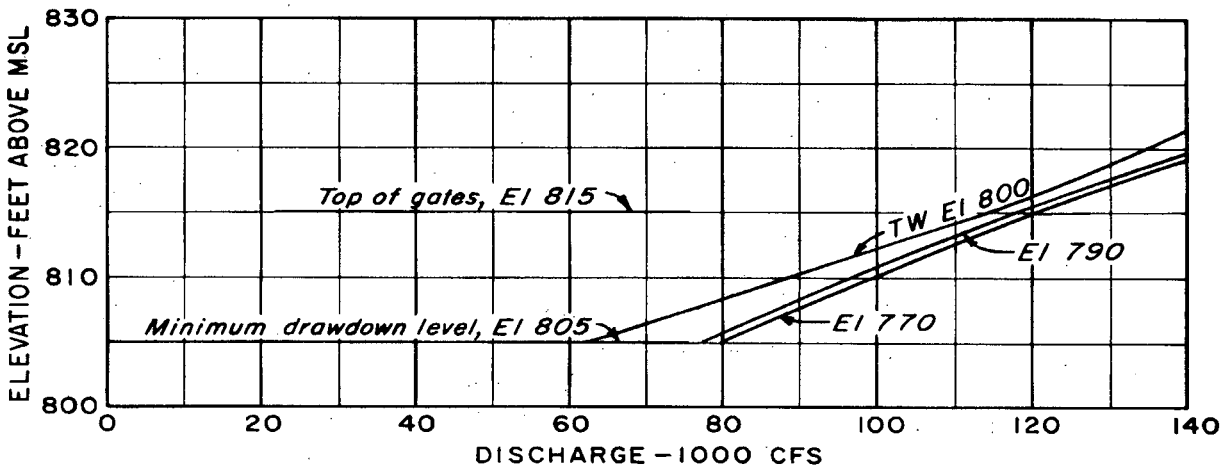

HEADWATER RATING CURVES

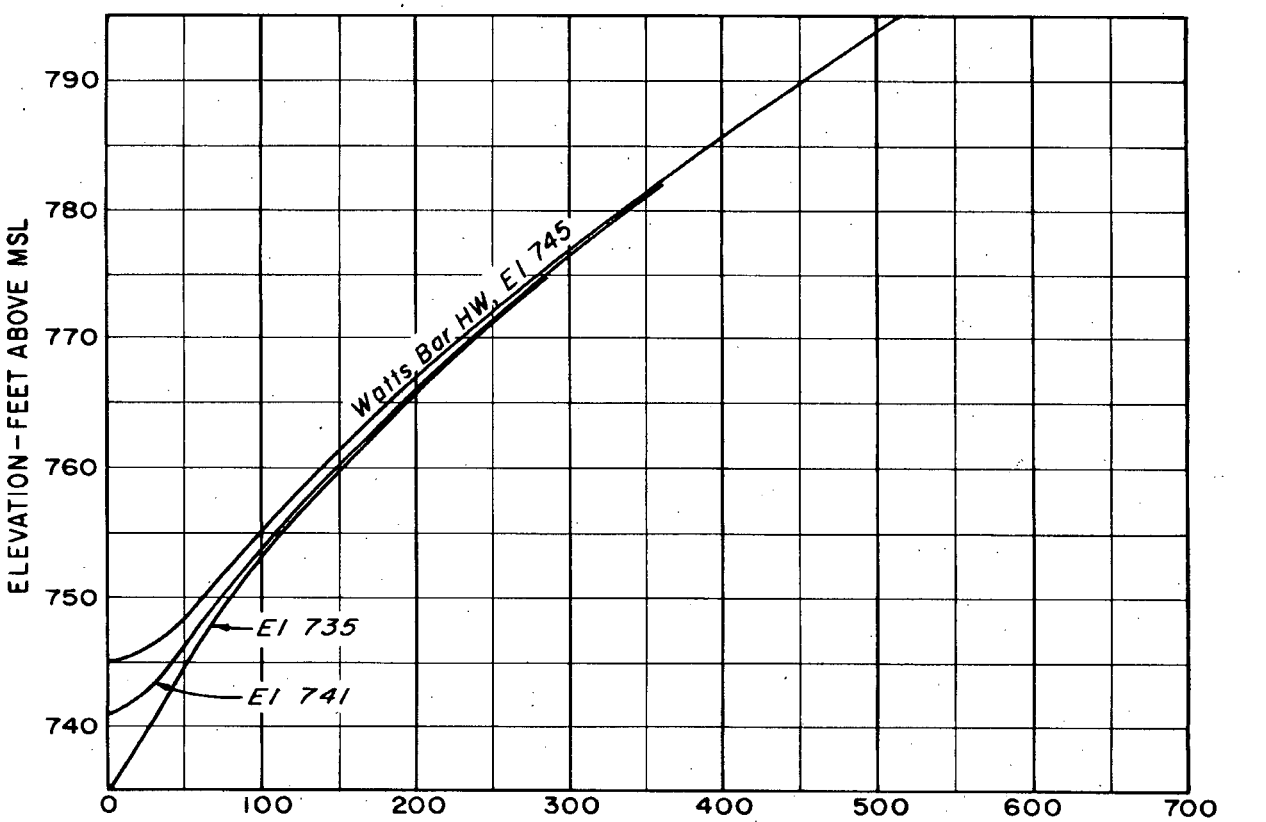

TAILWATER RATING CURVES

TELLICO DAM

SAFETY MODIFICATIONS FOR PROBABLE MAXIMUM FLOOD

Chronology

Safety analysis studies for Tellico Dam to evaluate the dam safety hydrologic deficiencies caused by a Probable Maximum Flood (PMF) were essentially completed in fiscal year (FY) 1986. The recommended proposal to provide additional ungated spillway capacity at Tellico Saddle Dam No.1 was programmed in the FY 1988 Operating Plan and approved by the TVA Board of Directors.

Cost of Modifications

Engineering and design costs for the capital safety modifications to Tellico Dam were approximately $230,600. The construction costs were approximately $2,733,900. The total project cost was approximately $2.96 million. Construction at the site was completed in September 1989. Figure 7 is a photograph of the completed emergency spillway.

Controlling Features

Modifications for the PMF consisted of a 2000 foot long ungated ogee crested spillway located 40 feet downstream of the centerline of Tellico Saddle Dam No.1 (See Figure 8). The spillway crest was set at elevation 817 which is the approximate level of the Maximum Probable Flood (MPF.) The width of the ogee section is 18.5 feet and the overall height of the crest is 13.5 feet from the bottom of the shear key. A horizontal apron energy dissipater extends 61.52 feet downstream of the ogee section. The 2000 foot long apron is about 18 inches thick. A 2 feet 3 inch high by 14 feet wide endsill at the downstream end of the apron provides additional energy dissipation. The ogee crest is flanked by a retaining wall that connects to the left abutment. The maximum height of the retaining wall is 24.5 feet above the footing.

Modifications for PMF (Tellico Emergency Spillway)

Quantities

Earth excavation	250,000 cu yd
Concrete	4,300 cu yd
Roller Compacted Concrete	19,600 cu yd
Rolled earthfill	186,000 cu yd
Crushed stone	9,400 tons
Riprap (new)	3,500 tons
Riprap (relocated)	3,600 tons

SAFETY MODICATIONS FOR PROBABLE MAXIMUM FLOOD

Figure 7

July 1998

TYPICAL SECTION UNGATED SPILLWAY AT SADDLE DAM NO. 1

Figure 8

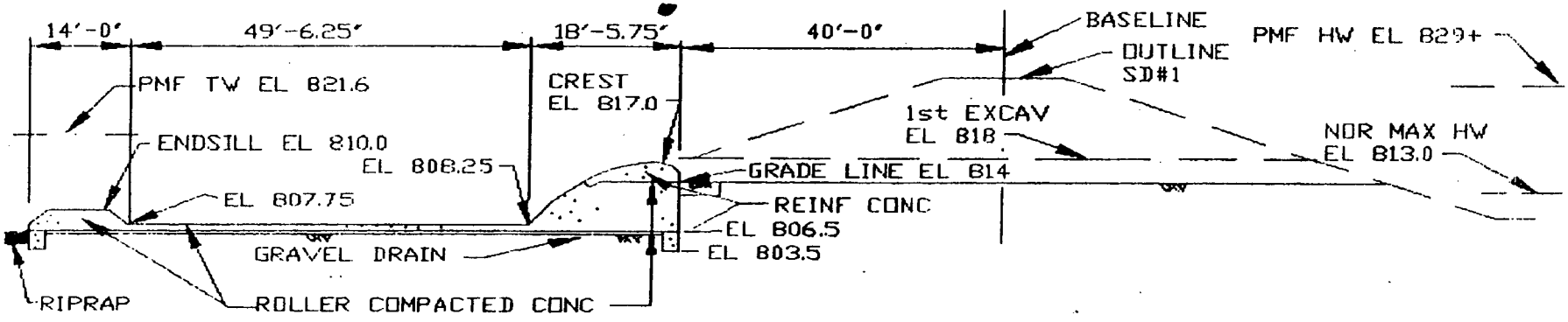

CONSTRUCTION DATA

Quantities (estimated)

Concrete dam :		
Excavation :	Earth	70,500 cu yd
	Rock	23,000 cu yd
Concrete		78,000 cu yd
Main earth dam :		
Excavation and stripping		300,000 cu yd
Rolled earthfill		180,000,000 cu yd
Riprap and filter blanket		83,000 cu yd
Saddle dams :		
Stripping		25,000 cu yd
Rolled earthfill		180,000 cu yd
Riprap and filter blanket		18,000 cu yd
Canal :		
Excavation		713,000 cu yd
Riprap and filter blanket		24,000 cu yd
Highways and railroads :		
Excavation		Not available

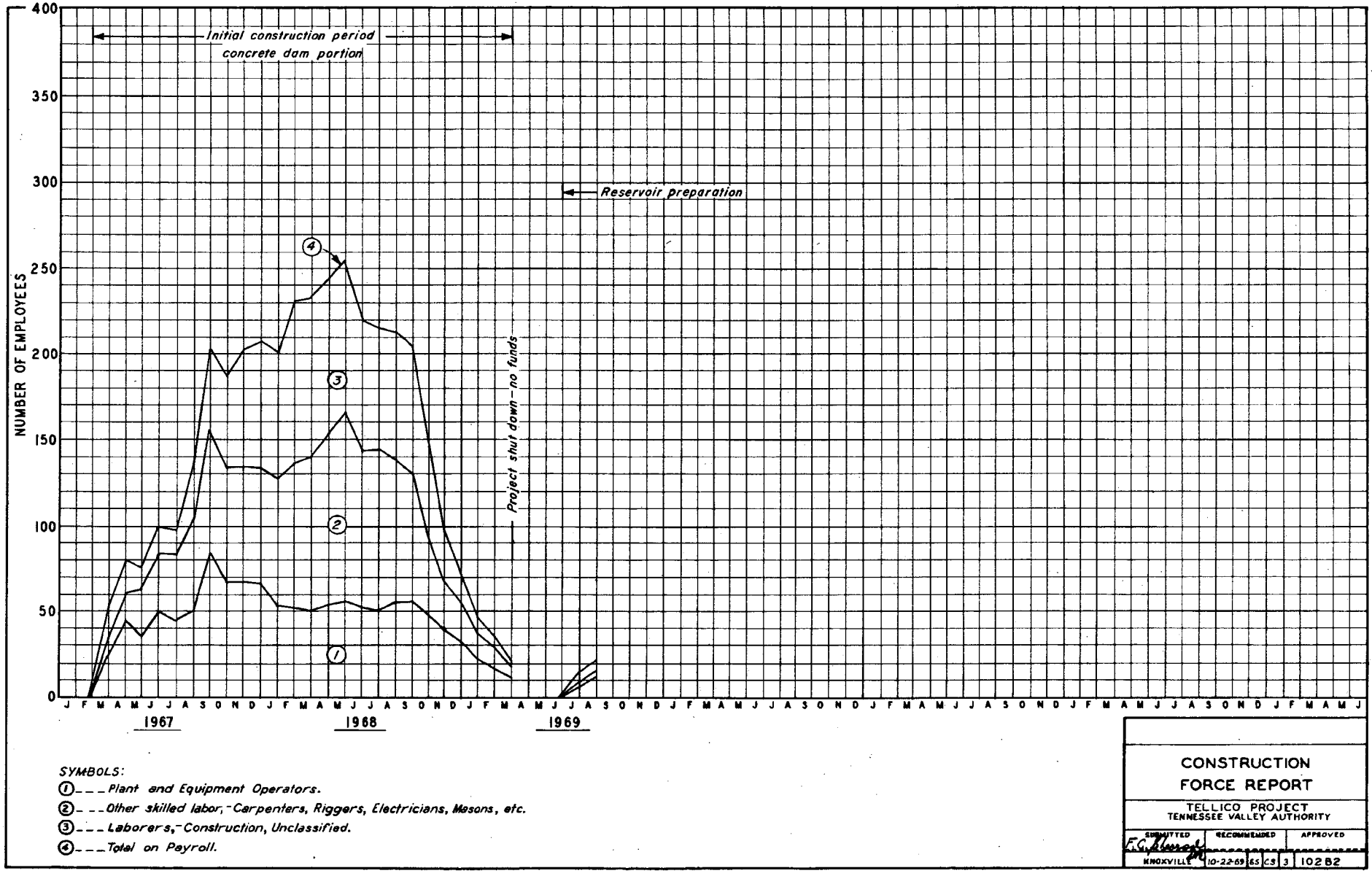

Note : Updated report will be provided at a later date

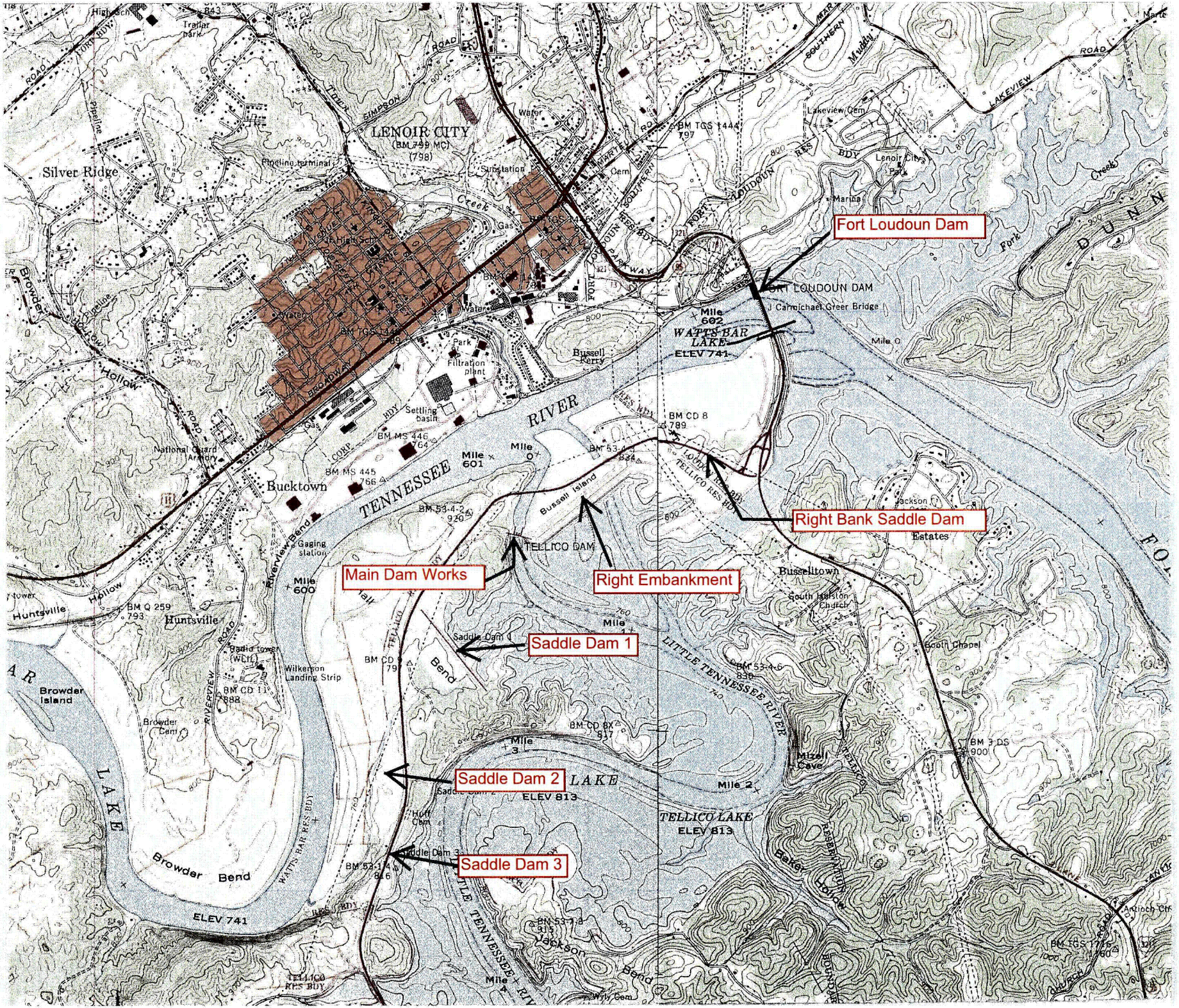

Fort Loudoun Dam
Right Bank Saddle Dam
Main Dam Works
Right Embankment
Saddle Dam 1
Saddle Dam 2
Saddle Dam 3
LENOIR CITY
Silver Ridge
Bucktown
Huntsville
Busselltown
TENNESSEE RIVER
LITTLE TENNESSEE RIVER
TELLICO LAKE
ELEV 813
WATTS BAR LAKE
ELEV 741
Browder Bend
Jackson Bend
Bussell Island
Bussell Ferry
Mile 602
Mile 601
Mile 600
Mile 3
Mile 2
Mile 0
Lenoir City Park
Lakeview Cem
Marina
Filtration plant
Settling basin
Gaging station
Wilkerson Landing Strip
Radio tower (WLIL)
Browder Island
Browder Cem
Huntsville Hollow
Mizell Cave
Baker Hollow
Jackson
Estates
Booth Chapel
South Holston Church
Antioch Ch
Wyly Cem
Huff Cem
Saddle Dam 1
Saddle Dam 2
Saddle Dam 3

TENNESSEE VALLEY AUTHORITY
RIVER OPERATIONS

L58 081212 808

TELLICO DAM

SPILLWAY DISCHARGE TABLES

MAY 2008

CONTENTS

Page

Instructions for Use of Tables 1
Location of Spillway Gates 3
Spillway Gate Arrangement Tables 4
Spillway Discharge Tables 5-124

Tailwater Range	Page
Up to 774.5	5
774.51 to 775.50	10
775.51 to 776.50	15
776.51 to 777.50	20
777.51 to 778.50	25
778.51 to 779.50	30
779.51 to 780.50	35
780.51 to 781.50	40
781.51 to 782.50	45
782.51 to 783.50	50
783.51 to 784.50	55
784.51 to 785.50	60
785.51 to 786.50	65
786.51 to 787.50	70
787.51 to 788.50	75
788.51 to 789.50	80
789.51 to 790.50	85
790.51 to 791.50	90
791.51 to 792.50	95
792.51 to 793.50	100
793.51 to 794.50	105
794.51 to 795.50	110
795.51 to 796.50	115
796.51 to 797.50	120

INSTRUCTIONS FOR USE OF TABLES

1. Tables Update

These tables supersede the tables dated November 2004 and May 1995. The discharges in these tables differ from those in the previous tables for gate arrangements 26 through 28 at headwater elevations exceeding 815 feet. The May 1995 tables superseded the tables dated July 1977. Those tables were revised to account for discharge over the emergency overflow weir (crest elevation 817.0 feet) and to increase the maximum headwater elevation covered in the tables from 819.0 feet to 820.0 feet. They were revised also to reflect the discharge values obtained from SPILLQ, which is a computer code used in TVA software for monitoring spill discharges and determining gate arrangements.

2. Purpose of Tables

These tables provide a means for setting required spillway discharges and for determining the discharge when a specific arrangement of gates is in use. The tabulated discharges are based on test results from scale models.

The specific gate arrangements in the tables were determined by considering erosion data obtained from the spillway model studies together with incremental discharge values required for satisfactory spillway operation.

3. When to Use Tables

The flood operating guide for Tellico-Fort Loudoun stipulates that only Fort Loudoun Spillway will be used in all but extreme floods. Little Tennessee River flow passes through a canal to Fort Loudoun Reservoir. Specific instructions will be given to the operators at Fort Loudoun powerhouse whenever it is necessary to pass water over Tellico Dam. This generally will occur only after the capacity of Fort Loudoun spillway is exceeded or when it is necessary to raise gates to prevent flow over the tops of the gates when the headwater elevation exceeds 815.0 feet. See section 8 -- Special Instruction.

4. Range of Tables

The tables cover the complete range of operating conditions. Discharges range from 0 to 158,700 cubic feet per second. Headwater elevations range from 800 feet to 820 feet. Tailwater elevations range from the minimum possible elevation to elevation 797.5 feet. The range of discharges for each tailwater elevation is ample to cover all operations.

5. Arrangement of Tables

The tables show spillway discharges in cubic feet per second for each 0.1 foot of headwater elevation and for various ranges of tailwater elevation.

Headwater elevations in 0.1-foot increments are shown at the top of each column. The headwater and tailwater range is shown at the bottom of each page. The first tailwater range covers all tailwater elevations up to and including elevation 774.5 feet. Additional tables cover tailwater ranges in 1-foot increments up to elevation 797.5 feet.

The discharge is tabulated under the headwater elevations for specific arrangements of gate openings, which are indicated by number in the left and right columns of each page. The numbered arrangements are defined in the table of Spillway Gate Arrangements on page 4. Reference to this table and to the drawing showing the location of the gates on page 3 will determine the gate opening to which each gate is to be set for any particular discharge given in the tables.

6. Discharge Intervals

The tables have been prepared so that the incremental discharge between the tabulated values for consecutive gate arrangements is less than 2 percent of the total combined discharge of Fort Loudoun and Tellico dams under the proposed plan of operation. The incremental discharge between tabulated values of consecutive headwater elevations is generally less than 1 percent. The differences in discharges caused by a change in tailwater elevation are also generally 1 percent or less. In general it is possible to set any required discharge within about 1 percent and to know the actual discharge for any given set of conditions within 1 percent. These tolerances are considered acceptable and therefore it will not be necessary to interpolate between values given in these tables.

When the exact headwater elevation does not appear in the tables, the discharge for the headwater elevation closest to it is used. For example, the column headed 812.9 is used for actual headwater elevations between 812.85 feet and 812.94 feet inclusive. When the actual headwater elevation is exactly halfway between tabular values, the larger value is used.

7. Raising and Lowering Gates

The operating mechanism for raising and lowering the spillway gates is located on the deck of the dam. The gates are raised individually by operating an electrical switch located near the operating mechanism. As the gate is raised or lowered, the gate opening is indicated on a dial visible from the control switch. The gates may be stopped at any opening, but only the openings shown in the Spillway Gate Arrangements Table on page 4 may be used. Gate opening indicator readings do not represent gate opening in feet but only provide a gate opening position that gives the desired discharge when used with the Spillway Gate Arrangements, page 4.

8. Special Instruction—Preventing Flow Over Top of Spillway Gates Above Headwater Elevation 815.0 feet

If the headwater elevation exceeds 815.0 feet (actually, 814.8 feet to provide a 0.2-foot margin of safety) the spillway gates must be set to one of the gate arrangements listed in the tables to prevent flow over the tops of the gates. The minimum gate openings are those corresponding to the lowest numbered gate arrangement for which a discharge value is provided in the tables.

9. Use of Tables

The tables can be used in two ways: (1) to determine the arrangement of gates needed to pass a required discharge at a given headwater and tailwater elevation, and (2) to determine the discharge for a given arrangement of gates and headwater and tailwater elevation.

Example 1 -- What gate arrangement is necessary to pass a discharge of 53,000 cubic feet per second with the headwater at elevation 813.67 feet and the tailwater at elevation 774.0 feet?

The first step is to determine which pages of the tables include this tailwater within their tailwater range. Referring to the contents page, we find that tailwater range "Up to 774.5" is found on pages 5 to 9. Within those pages, page 8 covers headwater elevations between 812 feet and 816 feet. The headwater elevation closest to 813.67 feet is 813.7 feet. In the column with this heading, the discharge closest to 53,000 cubic feet per second is 53,400 cubic feet per second and the corresponding gate arrangement is number 15. Reference to the table of gate arrangements on page 4 shows that gates 1, 2, and 3 should be opened to indicator readings of 15.97.

After the gates are opened, changes in the headwater elevation or tailwater elevation may require changes in the gate arrangement to maintain the desired discharge. For example, if the headwater should rise to 813.83 feet, the discharge will be found in the column headed 813.8. In this column the discharge closest to 53,000 cubic feet per second is 53,480 cubic feet per second for gate arrangement 15. Accordingly, no change in gate arrangement would be necessary. It may be seen further that the gate arrangement would not be changed until the headwater elevation equaled or exceeded 815.5 feet. For headwater elevation 815.5 feet, gate arrangement 14 will give the discharge closest to 53,000 cubic feet per second. To change to gate arrangement 14 from gate arrangement 15, it is necessary to lower the gates from indicator readings of 15.97 to indicator readings of 14.94.

Example 2 – The effect of a change in tailwater elevation is shown by this example. Suppose it is required to discharge 64,500 cubic feet per second with the headwater elevation at 808.76 feet and the tailwater elevation at 792.9 feet. The pages to be used are those marked "Tailwater 792.51 to 793.50." The headwater elevation closest to 808.76 feet is 808.8 feet. In the column headed 808.8 on page 102 the discharge closest to 64,500 cubic feet per second is 62,060 cubic feet per second at gate arrangement 19. Referring to the table of gate arrangements, page 4, it is found that gates 1, 2, and 3 are to be opened to indicator readings of 22.19. If operation under these conditions causes the tailwater to rise to elevation 793.78 feet, the set of pages marked "Tailwater 793.51 to 794.50" are used. At the same headwater elevation the discharge closest to 64,500 cubic feet per second is 65,600 cubic feet per second for gate arrangement 20. To change to gate arrangement 20 from gate arrangement 19, it is necessary to open gate 2 from indicator reading 22.19 to indicator reading 27.40.

Example 3 -- Suppose the operating records show that the headwater is at elevation 817.75 feet, the tailwater is at elevation 782.0 feet, and gate arrangement 7 is in use. The contents page indicates that tailwater range 781.51 to 782.50 is found on pages 45 to 49. The headwater is found on page 49, which is marked "Headwater 816 to 820." The elevation given is exactly halfway between elevations 817.7 feet and 817.8 feet. The larger value, 817.8 feet, should be used. In the column headed 817.8, opposite gate arrangement 7, the discharge is found to be 30,830 cubic feet per second.

TELLICO DAM

LOCATION OF SPILLWAY GATES

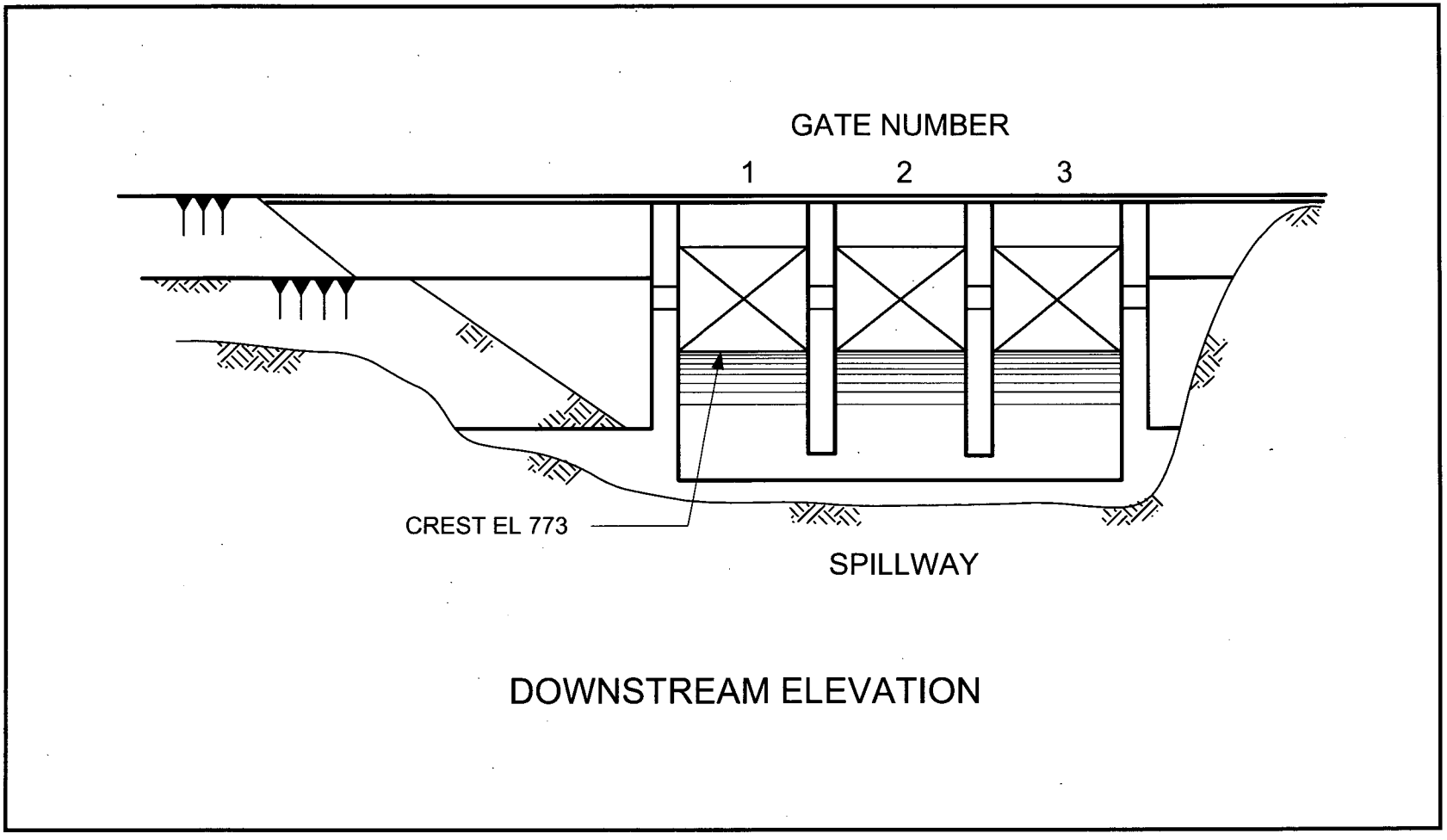

DOWNSTREAM ELEVATION

TELLICO DAM

SPILLWAY GATE ARRANGEMENTS

Arrangement Number	Gate Number		
	1	2	3
1	1.19	1.19	1.19
2	2.25	2.25	2.25
3	3.36	3.36	3.36
4	4.43	4.43	4.43
5	5.51	5.51	5.51
6	6.58	6.58	6.58
7	7.63	7.63	7.63
8	8.69	8.69	8.69
9	9.74	9.74	9.74
10	10.79	10.79	10.79
11	11.82	11.82	11.82
12	12.87	12.87	12.87
13	13.91	13.91	13.91
14	14.94	14.94	14.94
15	15.97	15.97	15.97
16	17.00	17.00	17.00
17	17.00	22.19	17.00
18	22.19	22.19	17.00
19	22.19	22.19	22.19
20	22.19	27.40	22.19
21	27.40	27.40	22.19
22	27.40	27.40	27.40
23	27.40	32.63	27.40
24	32.63	32.63	27.40
25	32.63	32.63	32.63
26	32.63	35.75	32.63
27	35.75	35.75	32.63
28	35.75	35.75	35.75

Figures in columns under each gate number refer to gate opening indicator reading
Gate closed at 0 indicator reading

TELLICO DAM
SPILLWAY DISCHARGE
IN CUBIC FEET PER SECOND

GATE ARRANGEMENT	HEADWATER ELEVATION																					GATE ARRANGEMENT
	800.0	800.1	800.2	800.3	800.4	800.5	800.6	800.7	800.8	800.9	801.0	801.1	801.2	801.3	801.4	801.5	801.6	801.7	801.8	801.9	802.0	
1	2,710	2,710	2,720	2,720	2,730	2,730	2,740	2,740	2,750	2,760	2,760	2,770	2,770	2,780	2,780	2,790	2,790	2,800	2,800	2,810	2,810	1
2	5,770	5,780	5,790	5,800	5,810	5,820	5,840	5,850	5,860	5,870	5,880	5,890	5,900	5,910	5,920	5,940	5,950	5,960	5,970	5,980	5,990	2
3	8,870	8,890	8,910	8,920	8,940	8,960	8,970	8,990	9,010	9,020	9,040	9,060	9,070	9,090	9,110	9,120	9,140	9,160	9,170	9,190	9,200	3
4	11,560	11,590	11,620	11,650	11,670	11,700	11,730	11,760	11,790	11,810	11,840	11,870	11,890	11,920	11,950	11,970	12,000	12,030	12,050	12,080	12,100	4
5	14,760	14,790	14,820	14,860	14,890	14,920	14,950	14,990	15,020	15,050	15,090	15,120	15,150	15,180	15,210	15,240	15,270	15,300	15,330	15,360	15,390	5
6	17,640	17,680	17,710	17,750	17,790	17,820	17,860	17,890	17,930	17,960	18,000	18,030	18,070	18,100	18,140	18,180	18,210	18,240	18,280	18,310	18,350	6
7	20,520	20,560	20,610	20,650	20,690	20,730	20,780	20,820	20,860	20,900	20,940	20,990	21,030	21,070	21,110	21,150	21,200	21,240	21,280	21,320	21,360	7
8	23,190	23,240	23,290	23,340	23,390	23,440	23,480	23,530	23,580	23,630	23,680	23,730	23,780	23,820	23,870	23,920	23,970	24,020	24,060	24,110	24,160	8
9	25,900	25,960	26,020	26,070	26,130	26,190	26,240	26,300	26,350	26,410	26,460	26,520	26,580	26,630	26,690	26,740	26,790	26,850	26,900	26,960	27,010	9
10	28,450	28,510	28,570	28,640	28,700	28,760	28,820	28,890	28,950	29,010	29,080	29,140	29,200	29,260	29,320	29,380	29,450	29,510	29,570	29,630	29,690	10
11	30,830	30,900	30,970	31,040	31,110	31,180	31,250	31,320	31,390	31,460	31,530	31,600	31,670	31,740	31,810	31,880	31,940	32,010	32,080	32,150	32,220	11
12	33,560	33,630	33,700	33,780	33,850	33,920	34,000	34,070	34,140	34,220	34,290	34,360	34,440	34,520	34,590	34,670	34,750	34,820	34,900	34,970	35,050	12
13	36,170	36,250	36,330	36,420	36,500	36,580	36,660	36,740	36,820	36,890	36,970	37,060	37,140	37,230	37,310	37,390	37,480	37,560	37,640	37,720	37,810	13
14	38,690	38,780	38,870	38,960	39,050	39,140	39,230	39,320	39,400	39,490	39,580	39,670	39,760	39,850	39,940	40,030	40,120	40,210	40,300	40,390	40,480	14
15	41,120	41,220	41,320	41,420	41,520	41,610	41,710	41,810	41,910	42,000	42,100	42,200	42,300	42,400	42,490	42,590	42,690	42,790	42,880	42,980	43,070	15
16	43,470	43,580	43,680	43,790	43,900	44,010	44,110	44,220	44,320	44,430	44,540	44,640	44,750	44,860	44,960	45,070	45,170	45,280	45,380	45,490	45,590	16
17	47,400	47,520	47,630	47,750	47,860	47,980	48,090	48,200	48,320	48,430	48,540	48,650	48,760	48,870	48,980	49,090	49,200	49,310	49,420	49,530	49,640	17
18	51,340	51,460	51,590	51,710	51,830	51,950	52,070	52,190	52,310	52,430	52,550	52,660	52,780	52,890	53,010	53,120	53,230	53,350	53,460	53,570	53,680	18
19	55,270	55,410	55,540	55,670	55,800	55,920	56,050	56,180	56,300	56,430	56,550	56,670	56,790	56,910	57,030	57,150	57,260	57,380	57,500	57,610	57,720	19
20	56,990	57,200	57,400	57,610	57,820	58,020	58,230	58,440	58,640	58,850	59,050	59,260	59,460	59,660	59,860	60,070	60,270	60,470	60,670	60,870	61,070	20
21	58,700	58,980	59,270	59,560	59,840	60,130	60,410	60,700	60,980	61,270	61,560	61,840	62,130	62,410	62,700	62,980	63,270	63,560	63,840	64,130	64,420	21
22	60,410	60,770	61,140	61,500	61,860	62,230	62,590	62,960	63,320	63,690	64,060	64,430	64,790	65,160	65,530	65,900	66,280	66,650	67,020	67,390	67,770	22
23	60,410	60,770	61,140	61,500	61,860	62,230	62,590	62,960	63,320	63,690	64,060	64,430	64,790	65,160	65,530	65,900	66,280	66,650	67,020	67,390	67,770	23
24	60,410	60,770	61,140	61,500	61,860	62,230	62,590	62,960	63,320	63,690	64,060	64,430	64,790	65,160	65,530	65,900	66,280	66,650	67,020	67,390	67,770	24
25	60,410	60,770	61,140	61,500	61,860	62,230	62,590	62,960	63,320	63,690	64,060	64,430	64,790	65,160	65,530	65,900	66,280	66,650	67,020	67,390	67,770	25
26	60,410	60,770	61,140	61,500	61,860	62,230	62,590	62,960	63,320	63,690	64,060	64,430	64,790	65,160	65,530	65,900	66,280	66,650	67,020	67,390	67,770	26
27	60,410	60,770	61,140	61,500	61,860	62,230	62,590	62,960	63,320	63,690	64,060	64,430	64,790	65,160	65,530	65,900	66,280	66,650	67,020	67,390	67,770	27
28	60,410	60,770	61,140	61,500	61,860	62,230	62,590	62,960	63,320	63,690	64,060	64,430	64,790	65,160	65,530	65,900	66,280	66,650	67,020	67,390	67,770	28

GATE ARRANGEMENT	HEADWATER ELEVATION																					GATE ARRANGEMENT
	802.0	802.1	802.2	802.3	802.4	802.5	802.6	802.7	802.8	802.9	803.0	803.1	803.2	803.3	803.4	803.5	803.6	803.7	803.8	803.9	804.0	
1	2,810	2,820	2,820	2,830	2,830	2,840	2,840	2,850	2,850	2,860	2,860	2,870	2,870	2,880	2,880	2,890	2,890	2,900	2,900	2,910	2,910	1
2	5,990	6,000	6,010	6,020	6,030	6,040	6,060	6,070	6,080	6,090	6,100	6,110	6,120	6,130	6,140	6,150	6,160	6,170	6,180	6,190	6,200	2
3	9,200	9,220	9,240	9,250	9,270	9,290	9,300	9,320	9,330	9,350	9,370	9,380	9,400	9,410	9,430	9,450	9,460	9,480	9,490	9,510	9,520	3
4	12,100	12,130	12,160	12,180	12,210	12,230	12,260	12,280	12,310	12,330	12,360	12,380	12,400	12,430	12,450	12,470	12,490	12,520	12,540	12,560	12,580	4
5	15,390	15,420	15,450	15,480	15,510	15,540	15,570	15,600	15,630	15,660	15,690	15,720	15,750	15,780	15,810	15,840	15,870	15,900	15,930	15,960	15,990	5
6	18,350	18,380	18,420	18,450	18,490	18,520	18,560	18,590	18,620	18,660	18,690	18,730	18,760	18,790	18,830	18,860	18,900	18,930	18,960	19,000	19,030	6
7	21,360	21,400	21,440	21,480	21,520	21,570	21,610	21,650	21,690	21,730	21,770	21,810	21,850	21,890	21,930	21,970	22,010	22,050	22,090	22,130	22,170	7
8	24,160	24,210	24,250	24,300	24,350	24,400	24,440	24,490	24,540	24,580	24,630	24,680	24,720	24,770	24,820	24,860	24,910	24,950	25,000	25,050	25,090	8
9	27,010	27,070	27,120	27,180	27,230	27,280	27,340	27,390	27,440	27,500	27,550	27,600	27,660	27,710	27,760	27,810	27,870	27,920	27,970	28,020	28,080	9
10	29,690	29,750	29,810	29,870	29,930	29,990	30,050	30,110	30,170	30,230	30,290	30,350	30,410	30,470	30,530	30,590	30,650	30,710	30,770	30,830	30,890	10
11	32,220	32,280	32,350	32,420	32,480	32,550	32,620	32,690	32,750	32,820	32,880	32,950	33,020	33,080	33,150	33,210	33,280	33,340	33,410	33,480	33,540	11
12	35,050	35,120	35,200	35,270	35,350	35,420	35,500	35,570	35,650	35,720	35,790	35,870	35,940	36,010	36,080	36,160	36,230	36,300	36,370	36,440	36,510	12
13	37,810	37,890	37,970	38,050	38,130	38,210	38,290	38,380	38,460	38,540	38,620	38,700	38,780	38,860	38,940	39,020	39,100	39,180	39,260	39,340	39,420	13
14	40,480	40,570	40,660	40,750	40,840	40,930	41,020	41,110	41,200	41,280	41,370	41,460	41,550	41,640	41,720	41,810	41,900	41,980	42,070	42,160	42,240	14
15	43,070	43,170	43,270	43,370	43,460	43,560	43,650	43,750	43,840	43,940	44,040	44,130	44,230	44,330	44,420	44,520	44,610	44,710	44,810	44,900	45,000	15
16	45,590	45,700	45,800	45,910	46,010	46,110	46,220	46,320	46,420	46,530	46,630	46,730	46,840	46,940	47,040	47,150	47,250	47,350	47,450	47,560	47,660	16
17	49,640	49,750	49,850	49,960	50,070	50,180	50,280	50,390	50,490	50,600	50,700	50,810	50,910	51,020	51,120	51,230	51,330	51,440	51,540	51,640	51,740	17
18	53,680	53,790	53,900	54,020	54,130	54,240	54,350	54,450	54,560	54,670	54,780	54,890	54,990	55,100	55,200	55,310	55,410	55,520	55,620	55,730	55,830	18
19	57,720	57,840	57,960	58,070	58,180	58,300	58,410	58,520	58,630	58,740	58,850	58,960	59,070	59,180	59,290	59,390	59,500	59,600	59,710	59,810	59,910	19
20	61,070	61,270	61,480	61,680	61,880	62,080	62,280	62,480	62,680	62,880	63,080	63,280	63,480	63,680	63,880	64,070	64,270	64,470	64,670	64,810	64,950	20
21	64,420	64,710	64,990	65,280	65,570	65,860	66,150	66,440	66,730	67,020	67,310	67,600	67,890	68,180	68,470	68,760	69,050	69,340	69,630	69,800	69,980	21
22	67,770	68,140	68,510	68,890	69,270	69,640	70,020	70,400	70,780	71,160	71,530	71,910	72,300	72,680	73,060	73,440	73,820	74,210	74,590	74,790	75,020	22
23	67,770	68,140	68,510	68,890	69,270	69,640	70,020	70,400	70,780	71,160	71,530	71,910	72,300	72,680	73,060	73,440	73,820	74,210	74,590	74,850	75,130	23
24	67,770	68,140	68,510	68,890	69,270	69,640	70,020	70,400	70,780	71,160	71,530	71,910	72,300	72,680	73,060	73,440	73,820	74,210	74,590	74,920	75,250	24
25	67,770	68,140	68,510	68,890	69,270	69,640	70,020	70,400	70,780	71,160	71,530	71,910	72,300	72,680	73,060	73,440	73,820	74,210	74,590	74,980	75,360	25
26	67,770	68,140	68,510	68,890	69,270	69,640	70,020	70,400	70,780	71,160	71,530	71,910	72,300	72,680	73,060	73,440	73,820	74,210	74,590	74,980	75,360	26
27	67,770	68,140	68,510	68,890	69,270	69,640	70,020	70,400	70,780	71,160	71,530	71,910	72,300	72,680	73,060	73,440	73,820	74,210	74,590	74,980	75,360	27
28	67,770	68,140	68,510	68,890	69,270	69,640	70,020	70,400	70,780	71,160	71,530	71,910	72,300	72,680	73,060	73,440	73,820	74,210	74,590	74,980	75,360	28

HEADWATER 800 to 804
TAILWATER Up to 774.5

MAY 2008

TELLICO DAM

SPILLWAY DISCHARGE

IN CUBIC FEET PER SECOND

HEADWATER ELEVATION

GATE ARRANGEMENT	804.0	804.1	804.2	804.3	804.4	804.5	804.6	804.7	804.8	804.9	805.0	805.1	805.2	805.3	805.4	805.5	805.6	805.7	805.8	805.9	806.0	GATE ARRANGEMENT
1	2,910	2,920	2,920	2,930	2,930	2,940	2,940	2,950	2,950	2,960	2,960	2,970	2,970	2,980	2,980	2,990	2,990	3,000	3,000	3,000	3,010	1
2	6,200	6,210	6,230	6,240	6,250	6,260	6,270	6,280	6,290	6,300	6,310	6,320	6,330	6,340	6,350	6,360	6,370	6,380	6,390	6,400	6,410	2
3	9,520	9,540	9,560	9,570	9,590	9,600	9,620	9,630	9,650	9,660	9,680	9,700	9,710	9,730	9,740	9,760	9,770	9,790	9,800	9,820	9,830	3
4	12,580	12,610	12,640	12,660	12,690	12,720	12,740	12,770	12,800	12,830	12,850	12,880	12,900	12,920	12,950	12,970	13,000	13,020	13,040	13,070	13,090	4
5	15,990	16,020	16,050	16,080	16,110	16,140	16,170	16,200	16,230	16,250	16,280	16,310	16,340	16,370	16,400	16,430	16,460	16,490	16,520	16,540	16,570	5
6	19,030	19,060	19,100	19,130	19,160	19,200	19,230	19,260	19,300	19,330	19,360	19,390	19,430	19,460	19,490	19,530	19,560	19,590	19,620	19,650	19,690	6
7	22,170	22,210	22,250	22,290	22,330	22,370	22,410	22,440	22,480	22,520	22,560	22,600	22,640	22,680	22,720	22,760	22,790	22,830	22,870	22,910	22,950	7
8	25,090	25,140	25,180	25,230	25,270	25,320	25,360	25,410	25,450	25,500	25,540	25,590	25,630	25,680	25,720	25,770	25,810	25,860	25,900	25,950	25,990	8
9	28,080	28,130	28,180	28,230	28,280	28,340	28,390	28,440	28,490	28,540	28,590	28,650	28,700	28,750	28,800	28,850	28,900	28,950	29,000	29,050	29,100	9
10	30,890	30,940	31,000	31,060	31,120	31,180	31,230	31,290	31,350	31,410	31,470	31,520	31,580	31,640	31,690	31,750	31,810	31,870	31,920	31,980	32,030	10
11	33,540	33,610	33,670	33,730	33,800	33,860	33,930	33,990	34,060	34,120	34,180	34,250	34,310	34,370	34,440	34,500	34,560	34,630	34,690	34,750	34,810	11
12	36,510	36,590	36,660	36,730	36,800	36,870	36,940	37,010	37,090	37,160	37,230	37,300	37,370	37,440	37,510	37,580	37,650	37,720	37,790	37,860	37,930	12
13	39,420	39,500	39,580	39,660	39,730	39,810	39,890	39,970	40,040	40,120	40,200	40,280	40,350	40,430	40,510	40,590	40,660	40,740	40,820	40,890	40,970	13
14	42,240	42,330	42,420	42,500	42,590	42,680	42,760	42,850	42,930	43,020	43,110	43,190	43,280	43,360	43,450	43,530	43,620	43,700	43,780	43,870	43,950	14
15	45,000	45,090	45,180	45,280	45,370	45,460	45,560	45,650	45,740	45,830	45,930	46,020	46,110	46,200	46,300	46,390	46,480	46,570	46,660	46,760	46,850	15
16	47,660	47,760	47,860	47,970	48,070	48,170	48,270	48,380	48,480	48,580	48,680	48,780	48,880	48,980	49,080	49,180	49,280	49,380	49,480	49,580	49,680	16
17	51,740	51,850	51,960	52,070	52,180	52,290	52,400	52,500	52,610	52,720	52,820	52,940	53,050	53,160	53,270	53,380	53,490	53,600	53,710	53,820	53,930	17
18	55,830	55,940	56,060	56,170	56,290	56,400	56,520	56,630	56,740	56,860	56,970	57,090	57,210	57,340	57,460	57,580	57,700	57,820	57,940	58,060	58,180	18
19	59,910	60,040	60,160	60,280	60,400	60,520	60,640	60,760	60,880	61,000	61,110	61,250	61,380	61,510	61,650	61,780	61,910	62,040	62,170	62,300	62,430	19
20	64,950	65,100	65,260	65,410	65,570	65,720	65,870	66,020	66,170	66,330	66,480	66,640	66,800	66,960	67,110	67,270	67,430	67,590	67,750	67,900	68,060	20
21	69,980	70,170	70,360	70,550	70,730	70,920	71,100	71,290	71,470	71,660	71,840	72,030	72,210	72,400	72,580	72,770	72,950	73,140	73,320	73,500	73,690	21
22	75,020	75,240	75,460	75,680	75,900	76,120	76,340	76,550	76,770	76,990	77,200	77,410	77,630	77,840	78,050	78,260	78,470	78,690	78,890	79,100	79,310	22
23	75,130	75,410	75,680	75,960	76,240	76,510	76,790	77,060	77,330	77,610	77,880	78,150	78,430	78,700	78,970	79,240	79,520	79,790	80,060	80,330	80,600	23
24	75,250	75,580	75,910	76,240	76,570	76,900	77,230	77,570	77,900	78,230	78,560	78,890	79,230	79,560	79,890	80,220	80,560	80,890	81,220	81,560	81,890	24
25	75,360	75,750	76,130	76,520	76,910	77,300	77,680	78,070	78,460	78,850	79,240	79,630	80,030	80,420	80,810	81,200	81,600	81,990	82,390	82,780	83,180	25
26	75,360	75,750	76,130	76,520	76,910	77,300	77,680	78,070	78,460	78,850	79,240	79,630	80,030	80,420	80,810	81,200	81,600	81,990	82,390	82,780	83,180	26
27	75,360	75,750	76,130	76,520	76,910	77,300	77,680	78,070	78,460	78,850	79,240	79,630	80,030	80,420	80,810	81,200	81,600	81,990	82,390	82,780	83,180	27
28	75,360	75,750	76,130	76,520	76,910	77,300	77,680	78,070	78,460	78,850	79,240	79,630	80,030	80,420	80,810	81,200	81,600	81,990	82,390	82,780	83,180	28

HEADWATER ELEVATION

GATE ARRANGEMENT	806.0	806.1	806.2	806.3	806.4	806.5	806.6	806.7	806.8	806.9	807.0	807.1	807.2	807.3	807.4	807.5	807.6	807.7	807.8	807.9	808.0	GATE ARRANGEMENT
1	3,010	3,010	3,020	3,020	3,030	3,030	3,040	3,040	3,050	3,050	3,060	3,060	3,070	3,070	3,080	3,080	3,090	3,090	3,090	3,100	3,100	1
2	6,410	6,420	6,430	6,440	6,450	6,460	6,470	6,480	6,490	6,500	6,510	6,520	6,530	6,540	6,550	6,560	6,570	6,580	6,590	6,600	6,610	2
3	9,830	9,850	9,860	9,880	9,890	9,910	9,920	9,940	9,950	9,970	9,980	10,000	10,010	10,030	10,040	10,060	10,070	10,090	10,100	10,120	10,130	3
4	13,090	13,120	13,140	13,160	13,190	13,210	13,230	13,260	13,280	13,310	13,330	13,350	13,370	13,400	13,420	13,440	13,460	13,490	13,510	13,530	13,550	4
5	16,570	16,600	16,630	16,670	16,700	16,730	16,760	16,790	16,820	16,850	16,880	16,910	16,930	16,960	16,980	17,010	17,040	17,060	17,090	17,120	17,140	5
6	19,690	19,720	19,750	19,780	19,820	19,850	19,880	19,910	19,940	19,980	20,010	20,040	20,070	20,100	20,130	20,170	20,200	20,230	20,260	20,290	20,320	6
7	22,950	22,990	23,020	23,060	23,100	23,140	23,180	23,210	23,250	23,290	23,330	23,370	23,400	23,440	23,480	23,520	23,550	23,590	23,630	23,660	23,700	7
8	25,990	26,030	26,080	26,120	26,170	26,210	26,250	26,300	26,340	26,380	26,430	26,470	26,510	26,560	26,600	26,640	26,690	26,730	26,770	26,820	26,860	8
9	29,100	29,150	29,200	29,250	29,300	29,350	29,400	29,450	29,500	29,550	29,600	29,650	29,700	29,750	29,800	29,850	29,900	29,950	29,990	30,040	30,090	9
10	32,030	32,090	32,150	32,200	32,260	32,320	32,370	32,430	32,480	32,540	32,590	32,650	32,710	32,760	32,820	32,870	32,930	32,980	33,040	33,090	33,140	10
11	34,810	34,880	34,940	35,000	35,060	35,120	35,190	35,250	35,310	35,370	35,430	35,490	35,560	35,620	35,680	35,740	35,800	35,860	35,920	35,980	36,040	11
12	37,930	38,000	38,070	38,140	38,210	38,270	38,340	38,410	38,480	38,550	38,620	38,680	38,750	38,820	38,890	38,960	39,020	39,090	39,160	39,230	39,290	12
13	40,970	41,050	41,120	41,200	41,280	41,350	41,430	41,500	41,580	41,650	41,730	41,800	41,880	41,950	42,030	42,100	42,180	42,250	42,330	42,400	42,470	13
14	43,950	44,040	44,120	44,200	44,290	44,370	44,450	44,530	44,620	44,700	44,780	44,860	44,950	45,030	45,110	45,190	45,270	45,350	45,430	45,520	45,600	14
15	46,850	46,940	47,030	47,120	47,210	47,300	47,390	47,480	47,570	47,660	47,750	47,840	47,930	48,020	48,110	48,200	48,280	48,370	48,460	48,550	48,640	15
16	49,680	49,780	49,880	49,970	50,070	50,170	50,270	50,370	50,460	50,560	50,660	50,750	50,850	50,950	51,040	51,140	51,230	51,330	51,430	51,520	51,620	16
17	53,930	54,040	54,150	54,270	54,380	54,490	54,600	54,710	54,820	54,930	55,040	55,150	55,260	55,370	55,480	55,590	55,700	55,810	55,910	56,020	56,130	17
18	58,180	58,310	58,430	58,560	58,680	58,800	58,930	59,050	59,180	59,300	59,420	59,540	59,670	59,790	59,910	60,040	60,160	60,280	60,400	60,520	60,640	18
19	62,430	62,570	62,710	62,850	62,990	63,120	63,260	63,400	63,530	63,670	63,800	63,940	64,080	64,210	64,350	64,480	64,620	64,760	64,890	65,020	65,160	19
20	68,060	68,190	68,320	68,450	68,570	68,700	68,830	68,950	69,080	69,200	69,330	69,450	69,570	69,690	69,810	69,930	70,050	70,170	70,290	70,410	70,530	20
21	73,690	73,810	73,920	74,040	74,160	74,280	74,390	74,510	74,620	74,740	74,850	74,960	75,060	75,170	75,280	75,380	75,490	75,590	75,690	75,790	75,900	21
22	79,310	79,420	79,530	79,640	79,750	79,860	79,960	80,070	80,170	80,270	80,370	80,470	80,560	80,650	80,740	80,830	80,920	81,010	81,090	81,180	81,260	22
23	80,600	80,810	81,010	81,220	81,420	81,630	81,830	82,030	82,230	82,440	82,640	82,830	83,030	83,220	83,420	83,610	83,810	84,000	84,190	84,390	84,580	23
24	81,890	82,190	82,490	82,790	83,090	83,400	83,700	84,000	84,300	84,600	84,900	85,200	85,500	85,800	86,100	86,400	86,700	86,990	87,290	87,590	87,890	24
25	83,180	83,580	83,970	84,370	84,770	85,170	85,570	85,970	86,370	86,770	87,170	87,570	87,970	88,370	88,780	89,180	89,580	89,990	90,390	90,800	91,200	25
26	83,180	83,580	83,970	84,370	84,770	85,170	85,570	85,970	86,370	86,770	87,170	87,570	87,970	88,370	88,780	89,180	89,580	89,990	90,390	90,800	91,200	26
27	83,180	83,580	83,970	84,370	84,770	85,170	85,570	85,970	86,370	86,770	87,170	87,570	87,970	88,370	88,780	89,180	89,580	89,990	90,390	90,800	91,200	27
28	83,180	83,580	83,970	84,370	84,770	85,170	85,570	85,970	86,370	86,770	87,170	87,570	87,970	88,370	88,780	89,180	89,580	89,990	90,390	90,800	91,200	28

MAY 2008

HEADWATER 804 to 808
TAILWATER Up to 774.5

TELLICO DAM
SPILLWAY DISCHARGE
IN CUBIC FEET PER SECOND

HEADWATER ELEVATION

GATE ARRANGEMENT	808.0	808.1	808.2	808.3	808.4	808.5	808.6	808.7	808.8	808.9	809.0	809.1	809.2	809.3	809.4	809.5	809.6	809.7	809.8	809.9	810.0	GATE ARRANGEMENT
1	3,100	3,110	3,110	3,120	3,120	3,130	3,130	3,140	3,140	3,150	3,150	3,150	3,160	3,160	3,170	3,170	3,180	3,180	3,190	3,190	3,190	1
2	6,610	6,620	6,630	6,640	6,650	6,660	6,670	6,680	6,690	6,700	6,710	6,720	6,730	6,740	6,750	6,760	6,770	6,780	6,790	6,800	6,810	2
3	10,130	10,150	10,160	10,180	10,190	10,210	10,220	10,240	10,250	10,260	10,280	10,290	10,310	10,320	10,340	10,350	10,370	10,380	10,390	10,410	10,420	3
4	13,550	13,580	13,600	13,620	13,640	13,660	13,690	13,710	13,730	13,750	13,770	13,790	13,810	13,830	13,850	13,870	13,890	13,910	13,930	13,950	13,970	4
5	17,140	17,170	17,200	17,230	17,250	17,280	17,310	17,340	17,360	17,390	17,420	17,450	17,470	17,500	17,520	17,550	17,570	17,600	17,620	17,650	17,670	5
6	20,320	20,350	20,390	20,420	20,450	20,480	20,510	20,540	20,570	20,600	20,630	20,660	20,700	20,730	20,760	20,790	20,820	20,850	20,880	20,910	20,940	6
7	23,700	23,740	23,780	23,810	23,850	23,890	23,920	23,960	24,000	24,030	24,070	24,110	24,140	24,180	24,220	24,250	24,290	24,320	24,360	24,400	24,430	7
8	26,860	26,900	26,940	26,990	27,030	27,070	27,110	27,160	27,200	27,240	27,280	27,320	27,370	27,410	27,450	27,490	27,530	27,580	27,620	27,660	27,700	8
9	30,090	30,140	30,190	30,240	30,290	30,330	30,380	30,430	30,480	30,530	30,570	30,620	30,670	30,720	30,770	30,810	30,860	30,910	30,960	31,000	31,050	9
10	33,140	33,200	33,250	33,310	33,360	33,420	33,470	33,520	33,580	33,630	33,690	33,740	33,790	33,850	33,900	33,950	34,010	34,060	34,110	34,160	34,220	10
11	36,040	36,100	36,160	36,220	36,280	36,340	36,400	36,460	36,520	36,580	36,640	36,700	36,760	36,820	36,880	36,940	37,000	37,060	37,120	37,180	37,240	11
12	39,290	39,360	39,430	39,490	39,560	39,630	39,690	39,760	39,820	39,890	39,960	40,020	40,090	40,150	40,220	40,280	40,350	40,410	40,480	40,540	40,610	12
13	42,470	42,550	42,620	42,690	42,770	42,840	42,910	42,990	43,060	43,130	43,200	43,280	43,350	43,420	43,490	43,570	43,640	43,710	43,780	43,850	43,920	13
14	45,600	45,680	45,760	45,840	45,920	46,000	46,080	46,160	46,240	46,320	46,400	46,480	46,550	46,630	46,710	46,790	46,870	46,950	47,030	47,100	47,180	14
15	48,640	48,720	48,810	48,900	48,990	49,070	49,160	49,250	49,330	49,420	49,510	49,590	49,680	49,760	49,850	49,940	50,020	50,110	50,190	50,280	50,360	15
16	51,620	51,710	51,810	51,900	52,000	52,090	52,180	52,280	52,370	52,460	52,560	52,650	52,740	52,840	52,930	53,020	53,110	53,210	53,300	53,390	53,480	16
17	56,130	56,240	56,350	56,450	56,560	56,670	56,770	56,880	56,990	57,090	57,200	57,310	57,410	57,520	57,620	57,730	57,830	57,940	58,040	58,150	58,250	17
18	60,640	60,770	60,890	61,010	61,130	61,250	61,370	61,490	61,600	61,720	61,840	61,960	62,080	62,200	62,310	62,430	62,550	62,670	62,780	62,900	63,020	18
19	65,160	65,290	65,430	65,560	65,690	65,830	65,960	66,090	66,220	66,350	66,480	66,620	66,750	66,880	67,010	67,140	67,270	67,400	67,530	67,650	67,780	19
20	70,530	70,650	70,760	70,880	71,000	71,110	71,230	71,350	71,460	71,570	71,690	71,800	71,910	72,020	72,130	72,240	72,340	72,450	72,560	72,670	72,770	20
21	75,900	76,000	76,100	76,200	76,300	76,400	76,500	76,600	76,700	76,800	76,890	76,980	77,070	77,160	77,250	77,340	77,420	77,510	77,590	77,680	77,760	21
22	81,260	81,350	81,440	81,520	81,610	81,690	81,780	81,860	81,940	82,020	82,100	82,170	82,230	82,300	82,370	82,430	82,500	82,560	82,630	82,690	82,750	22
23	84,580	84,770	84,960	85,160	85,350	85,540	85,730	85,920	86,120	86,310	86,490	86,680	86,860	87,040	87,230	87,410	87,590	87,770	87,950	88,130	88,310	23
24	87,890	88,190	88,490	88,790	89,090	89,390	89,690	89,990	90,290	90,590	90,890	91,190	91,490	91,780	92,080	92,380	92,680	92,970	93,270	93,570	93,870	24
25	91,200	91,610	92,020	92,430	92,830	93,240	93,650	94,060	94,470	94,880	95,290	95,700	96,110	96,530	96,940	97,350	97,770	98,180	98,590	99,010	99,420	25
26	91,200	91,610	92,020	92,430	92,830	93,240	93,650	94,060	94,470	94,880	95,290	95,700	96,110	96,530	96,940	97,350	97,770	98,180	98,590	99,010	99,420	26
27	91,200	91,610	92,020	92,430	92,830	93,240	93,650	94,060	94,470	94,880	95,290	95,700	96,110	96,530	96,940	97,350	97,770	98,180	98,590	99,010	99,420	27
28	91,200	91,610	92,020	92,430	92,830	93,240	93,650	94,060	94,470	94,880	95,290	95,700	96,110	96,530	96,940	97,350	97,770	98,180	98,590	99,010	99,420	28

HEADWATER ELEVATION

GATE ARRANGEMENT	810.0	810.1	810.2	810.3	810.4	810.5	810.6	810.7	810.8	810.9	811.0	811.1	811.2	811.3	811.4	811.5	811.6	811.7	811.8	811.9	812.0	GATE ARRANGEMENT
1	3,190	3,200	3,200	3,210	3,210	3,220	3,220	3,230	3,230	3,240	3,240	3,240	3,250	3,250	3,260	3,260	3,270	3,270	3,270	3,280	3,280	1
2	6,810	6,820	6,830	6,830	6,840	6,850	6,860	6,870	6,880	6,890	6,900	6,910	6,920	6,930	6,940	6,950	6,960	6,970	6,980	6,990	7,000	2
3	10,420	10,440	10,450	10,470	10,480	10,500	10,510	10,520	10,540	10,550	10,570	10,580	10,590	10,610	10,620	10,640	10,650	10,660	10,680	10,690	10,710	3
4	13,970	13,990	14,010	14,030	14,050	14,070	14,090	14,110	14,130	14,150	14,170	14,190	14,210	14,230	14,250	14,260	14,280	14,300	14,320	14,340	14,360	4
5	17,670	17,700	17,730	17,750	17,780	17,800	17,830	17,850	17,880	17,900	17,930	17,950	17,980	18,000	18,030	18,050	18,070	18,100	18,120	18,150	18,170	5
6	20,940	20,970	21,000	21,030	21,060	21,090	21,120	21,150	21,180	21,210	21,240	21,270	21,300	21,330	21,360	21,390	21,420	21,450	21,480	21,510	21,540	6
7	24,430	24,470	24,500	24,540	24,580	24,610	24,650	24,680	24,720	24,750	24,790	24,820	24,860	24,900	24,930	24,970	25,000	25,040	25,070	25,110	25,140	7
8	27,700	27,740	27,780	27,820	27,870	27,910	27,950	27,990	28,030	28,070	28,110	28,150	28,190	28,230	28,270	28,310	28,350	28,400	28,440	28,480	28,520	8
9	31,050	31,100	31,140	31,190	31,240	31,280	31,330	31,380	31,420	31,470	31,520	31,560	31,610	31,660	31,700	31,750	31,800	31,840	31,890	31,930	31,980	9
10	34,220	34,270	34,320	34,380	34,430	34,480	34,530	34,590	34,640	34,690	34,740	34,790	34,850	34,900	34,950	35,000	35,050	35,100	35,160	35,210	35,260	10
11	37,240	37,300	37,360	37,420	37,480	37,540	37,600	37,660	37,720	37,780	37,840	37,900	37,960	38,020	38,080	38,140	38,200	38,260	38,310	38,370	38,430	11
12	40,610	40,680	40,740	40,810	40,880	40,940	41,010	41,080	41,140	41,210	41,270	41,340	41,410	41,470	41,540	41,600	41,670	41,740	41,800	41,870	41,930	12
13	43,920	44,000	44,070	44,140	44,210	44,280	44,360	44,430	44,500	44,570	44,640	44,710	44,790	44,860	44,930	45,000	45,070	45,140	45,210	45,280	45,350	13
14	47,180	47,260	47,340	47,420	47,490	47,570	47,650	47,720	47,800	47,880	47,960	48,030	48,110	48,180	48,260	48,340	48,410	48,490	48,560	48,640	48,720	14
15	50,360	50,450	50,530	50,610	50,700	50,780	50,870	50,950	51,030	51,120	51,200	51,280	51,370	51,450	51,530	51,620	51,700	51,780	51,860	51,940	52,030	15
16	53,480	53,570	53,670	53,760	53,850	53,940	54,030	54,120	54,210	54,300	54,390	54,480	54,570	54,660	54,750	54,840	54,930	55,020	55,110	55,200	55,280	16
17	58,250	58,350	58,460	58,560	58,660	58,770	58,870	58,970	59,080	59,180	59,280	59,380	59,480	59,590	59,690	59,790	59,890	59,990	60,090	60,190	60,290	17
18	63,020	63,130	63,250	63,360	63,480	63,600	63,710	63,830	63,940	64,050	64,170	64,280	64,400	64,510	64,620	64,740	64,850	64,960	65,070	65,190	65,300	18
19	67,780	67,910	68,040	68,170	68,300	68,420	68,550	68,680	68,800	68,930	69,060	69,180	69,310	69,430	69,560	69,680	69,810	69,930	70,060	70,180	70,310	19
20	72,770	72,880	72,990	73,100	73,220	73,320	73,430	73,540	73,650	73,760	73,870	73,990	74,120	74,250	74,370	74,500	74,630	74,750	74,880	75,000	75,130	20
21	77,760	77,850	77,950	78,040	78,130	78,230	78,320	78,410	78,500	78,590	78,680	78,810	78,930	79,060	79,190	79,320	79,440	79,570	79,700	79,820	79,950	21
22	82,750	82,830	82,900	82,980	83,050	83,130	83,200	83,270	83,350	83,420	83,490	83,620	83,750	83,880	84,000	84,130	84,260	84,390	84,510	84,640	84,770	22
23	88,310	88,500	88,690	88,880	89,070	89,250	89,440	89,630	89,820	90,010	90,190	90,420	90,650	90,820	90,980	91,150	91,320	91,480	91,650	91,810	91,970	23
24	93,870	94,170	94,470	94,780	95,080	95,380	95,690	95,990	96,290	96,600	96,900	97,220	97,550	97,760	97,960	98,170	98,370	98,580	98,780	98,980	99,180	24
25	99,420	99,840	100,300	100,700	101,100	101,500	101,900	102,300	102,800	103,200	103,600	104,000	104,400	104,700	104,900	105,200	105,400	105,700	105,900	106,100	106,400	25
26	99,420	99,840	100,300	100,700	101,100	101,500	101,900	102,300	102,800	103,200	103,600	104,000	104,400	104,800	105,100	105,400	105,700	106,000	106,300	106,600	106,900	26
27	99,420	99,840	100,300	100,700	101,100	101,500	101,900	102,300	102,800	103,200	103,600	104,000	104,400	104,800	105,200	105,500	105,900	106,300	106,600	107,000	107,400	27
28	99,420	99,840	100,300	100,700	101,100	101,500	101,900	102,300	102,800	103,200	103,600	104,000	104,400	104,900	105,300	105,700	106,100	106,600	107,000	107,400	107,800	28

HEADWATER 808 to 812
TAILWATER Up to 774.5

MAY 2008

TELLICO DAM
SPILLWAY DISCHARGE
IN CUBIC FEET PER SECOND

GATE ARRANGEMENT	HEADWATER ELEVATION																					GATE ARRANGEMENT
	812.0	812.1	812.2	812.3	812.4	812.5	812.6	812.7	812.8	812.9	813.0	813.1	813.2	813.3	813.4	813.5	813.6	813.7	813.8	813.9	814.0	
1	3,280	3,290	3,290	3,300	3,300	3,310	3,310	3,310	3,320	3,320	3,330	3,330	3,340	3,340	3,340	3,350	3,350	3,360	3,360	3,370	3,370	1
2	7,000	7,000	7,010	7,020	7,030	7,040	7,050	7,060	7,070	7,080	7,090	7,100	7,110	7,120	7,120	7,130	7,140	7,150	7,160	7,170	7,180	2
3	10,710	10,720	10,730	10,750	10,760	10,780	10,790	10,800	10,820	10,830	10,850	10,860	10,870	10,890	10,900	10,910	10,930	10,940	10,960	10,970	10,980	3
4	14,360	14,380	14,400	14,420	14,440	14,460	14,470	14,490	14,510	14,530	14,550	14,570	14,590	14,610	14,630	14,640	14,660	14,680	14,700	14,720	14,740	4
5	18,170	18,200	18,220	18,250	18,270	18,300	18,320	18,340	18,370	18,390	18,420	18,440	18,470	18,500	18,520	18,550	18,580	18,600	18,630	18,650	18,680	5
6	21,540	21,570	21,600	21,630	21,660	21,690	21,720	21,740	21,770	21,800	21,830	21,860	21,890	21,920	21,950	21,980	22,010	22,030	22,060	22,090	22,120	6
7	25,140	25,180	25,210	25,250	25,280	25,320	25,350	25,390	25,420	25,450	25,490	25,520	25,560	25,590	25,630	25,660	25,690	25,730	25,760	25,800	25,830	7
8	28,520	28,560	28,600	28,640	28,680	28,720	28,760	28,800	28,840	28,880	28,920	28,960	28,990	29,030	29,070	29,110	29,150	29,190	29,230	29,270	29,310	8
9	31,980	32,020	32,070	32,120	32,160	32,210	32,250	32,300	32,340	32,390	32,430	32,480	32,520	32,570	32,610	32,660	32,700	32,750	32,790	32,840	32,880	9
10	35,260	35,310	35,360	35,410	35,460	35,510	35,560	35,610	35,670	35,720	35,770	35,820	35,870	35,920	35,970	36,020	36,070	36,120	36,170	36,220	36,270	10
11	38,430	38,490	38,550	38,610	38,670	38,720	38,780	38,840	38,900	38,950	39,010	39,070	39,130	39,180	39,240	39,300	39,360	39,410	39,470	39,530	39,580	11
12	41,930	41,990	42,060	42,120	42,180	42,240	42,310	42,370	42,430	42,490	42,550	42,620	42,680	42,750	42,810	42,880	42,940	43,000	43,070	43,130	43,190	12
13	45,350	45,420	45,490	45,560	45,630	45,700	45,760	45,830	45,900	45,970	46,040	46,100	46,170	46,230	46,300	46,360	46,430	46,490	46,560	46,620	46,690	13
14	48,720	48,790	48,870	48,940	49,020	49,090	49,170	49,240	49,320	49,390	49,460	49,540	49,610	49,690	49,760	49,830	49,910	49,980	50,060	50,130	50,200	14
15	52,030	52,110	52,190	52,270	52,350	52,430	52,520	52,600	52,680	52,760	52,840	52,920	53,000	53,080	53,160	53,240	53,320	53,400	53,480	53,560	53,640	15
16	55,280	55,370	55,460	55,550	55,640	55,730	55,810	55,900	55,990	56,080	56,160	56,250	56,340	56,420	56,510	56,600	56,680	56,770	56,860	56,940	57,030	16
17	60,290	60,390	60,490	60,590	60,690	60,790	60,890	60,990	61,090	61,190	61,290	61,390	61,480	61,580	61,680	61,780	61,880	61,970	62,070	62,170	62,260	17
18	65,300	65,410	65,520	65,630	65,750	65,860	65,970	66,080	66,190	66,300	66,410	66,520	66,630	66,740	66,850	66,960	67,070	67,180	67,280	67,390	67,500	18
19	70,310	70,430	70,550	70,680	70,800	70,920	71,040	71,170	71,290	71,410	71,530	71,650	71,770	71,900	72,020	72,140	72,260	72,380	72,500	72,620	72,740	19
20	75,130	75,260	75,390	75,520	75,650	75,780	75,910	76,040	76,170	76,290	76,420	76,560	76,690	76,820	76,960	77,090	77,220	77,360	77,490	77,620	77,750	20
21	79,950	80,080	80,220	80,360	80,500	80,630	80,770	80,910	81,040	81,180	81,310	81,460	81,610	81,750	81,900	82,050	82,190	82,340	82,480	82,630	82,770	21
22	84,770	84,910	85,060	85,200	85,350	85,490	85,630	85,780	85,920	86,060	86,200	86,360	86,520	86,680	86,840	87,000	87,160	87,320	87,470	87,630	87,790	22
23	91,970	92,070	92,170	92,270	92,360	92,460	92,550	92,650	92,740	92,830	92,920	93,030	93,150	93,260	93,370	93,480	93,590	93,690	93,800	93,910	94,020	23
24	99,180	99,230	99,280	99,330	99,380	99,430	99,470	99,520	99,560	99,600	99,640	99,700	99,770	99,830	99,890	99,950	100,000	100,100	100,100	100,200	100,200	24
25	106,400	106,400	106,400	106,400	106,400	106,400	106,400	106,400	106,400	106,400	106,400	106,400	106,400	106,400	106,400	106,400	106,400	106,400	106,500	106,500	106,500	25
26	106,900	107,000	107,200	107,300	107,400	107,600	107,700	107,900	108,000	108,100	108,300	108,400	108,600	108,700	108,900	109,000	109,200	109,300	109,500	109,600	109,800	26
27	107,400	107,600	107,900	108,200	108,500	108,800	109,100	109,300	109,600	109,900	110,200	110,500	110,800	111,100	111,400	111,600	111,900	112,200	112,500	112,800	113,100	27
28	107,800	108,300	108,700	109,100	109,500	110,000	110,400	110,800	111,200	111,700	112,100	112,500	113,000	113,400	113,800	114,300	114,700	115,100	115,600	116,000	116,400	28

GATE ARRANGEMENT	HEADWATER ELEVATION																					GATE ARRANGEMENT
	814.0	814.1	814.2	814.3	814.4	814.5	814.6	814.7	814.8	814.9	815.0	815.1	815.2	815.3	815.4	815.5	815.6	815.7	815.8	815.9	816.0	
1	3,370	3,370	3,380	3,380	3,390	3,390	3,400	3,400	3,400	3,410	3,410	3,420	3,420	3,430	3,430	3,430						1
2	7,180	7,190	7,200	7,210	7,220	7,220	7,230	7,240	7,250	7,260	7,270	7,280	7,290	7,300	7,310	7,310	7,320	7,330	7,340	7,350	7,360	2
3	10,980	11,000	11,010	11,020	11,040	11,050	11,060	11,080	11,090	11,100	11,120	11,130	11,140	11,160	11,170	11,180	11,200	11,210	11,220	11,240	11,250	3
4	14,740	14,760	14,780	14,790	14,810	14,830	14,850	14,870	14,890	14,910	14,920	14,940	14,960	14,980	15,000	15,020	15,030	15,050	15,070	15,090	15,110	4
5	18,680	18,710	18,740	18,760	18,790	18,820	18,850	18,880	18,900	18,930	18,960	18,980	19,010	19,030	19,060	19,080	19,110	19,130	19,160	19,180	19,210	5
6	22,120	22,150	22,180	22,210	22,240	22,260	22,290	22,320	22,350	22,380	22,410	22,440	22,460	22,490	22,520	22,550	22,580	22,600	22,630	22,660	22,690	6
7	25,830	25,870	25,900	25,930	25,970	26,000	26,030	26,070	26,100	26,140	26,170	26,200	26,240	26,270	26,300	26,340	26,370	26,400	26,440	26,470	26,500	7
8	29,310	29,350	29,390	29,430	29,470	29,500	29,540	29,580	29,620	29,660	29,700	29,740	29,780	29,810	29,850	29,890	29,930	29,970	30,010	30,040	30,080	8
9	32,880	32,930	32,970	33,010	33,060	33,100	33,150	33,190	33,240	33,280	33,320	33,370	33,410	33,460	33,500	33,540	33,590	33,630	33,670	33,720	33,760	9
10	36,270	36,320	36,370	36,420	36,470	36,520	36,570	36,620	36,660	36,710	36,760	36,810	36,860	36,910	36,960	37,010	37,060	37,110	37,150	37,200	37,250	10
11	39,580	39,640	39,700	39,750	39,810	39,870	39,930	39,980	40,040	40,100	40,150	40,210	40,270	40,330	40,390	40,450	40,500	40,560	40,620	40,680	40,740	11
12	43,190	43,260	43,320	43,380	43,440	43,500	43,570	43,630	43,690	43,750	43,810	43,880	43,940	44,000	44,070	44,130	44,190	44,260	44,320	44,380	44,450	12
13	46,690	46,750	46,820	46,890	46,950	47,020	47,090	47,150	47,220	47,290	47,350	47,430	47,500	47,570	47,650	47,720	47,790	47,870	47,940	48,010	48,090	13
14	50,200	50,280	50,350	50,430	50,510	50,580	50,660	50,730	50,810	50,880	50,960	51,030	51,100	51,170	51,240	51,320	51,390	51,460	51,530	51,600	51,670	14
15	53,640	53,720	53,800	53,880	53,960	54,040	54,110	54,190	54,270	54,350	54,430	54,510	54,590	54,660	54,740	54,820	54,900	54,970	55,050	55,130	55,210	15
16	57,030	57,110	57,200	57,290	57,370	57,460	57,540	57,630	57,710	57,800	57,880	57,970	58,050	58,130	58,220	58,300	58,390	58,470	58,550	58,640	58,720	16
17	62,260	62,360	62,460	62,560	62,650	62,750	62,840	62,940	63,040	63,130	63,230	63,320	63,420	63,510	63,610	63,700	63,800	63,890	63,990	64,080	64,180	17
18	67,500	67,610	67,720	67,820	67,930	68,040	68,150	68,250	68,360	68,470	68,570	68,680	68,790	68,890	69,000	69,100	69,210	69,320	69,420	69,530	69,630	18
19	72,740	72,860	72,980	73,090	73,210	73,330	73,450	73,570	73,690	73,800	73,920	74,040	74,160	74,270	74,390	74,510	74,620	74,740	74,860	74,970	75,090	19
20	77,750	77,890	78,020	78,150	78,280	78,420	78,550	78,680	78,810	78,940	79,070	79,200	79,330	79,460	79,590	79,720	79,850	79,980	80,110	80,240	80,360	20
21	82,770	82,920	83,060	83,210	83,350	83,500	83,640	83,790	83,930	84,080	84,220	84,360	84,510	84,650	84,790	84,930	85,070	85,220	85,360	85,500	85,640	21
22	87,790	87,950	88,110	88,270	88,420	88,580	88,740	88,900	89,050	89,210	89,370	89,520	89,680	89,840	89,990	90,150	90,300	90,460	90,610	90,760	90,920	22
23	94,020	94,140	94,260	94,380	94,510	94,630	94,750	94,870	94,990	95,110	95,220	95,360	95,490	95,620	95,750	95,890	96,020	96,150	96,280	96,410	96,530	23
24	100,200	100,300	100,400	100,500	100,600	100,700	100,800	100,800	100,900	101,000	101,100	101,200	101,300	101,400	101,500	101,600	101,700	101,800	101,900	102,000	102,200	24
25	106,500	106,500	106,600	106,600	106,700	106,700	106,800	106,800	106,900	106,900	106,900	107,000	107,100	107,200	107,300	107,400	107,400	107,500	107,600	107,700	107,800	25
26	109,800	110,000	110,100	110,300	110,500	110,700	110,900	111,000	111,200	111,400	111,600	111,600	111,700	111,700	111,800	111,800	111,900	112,000	112,000	112,100	112,100	26
27	113,100	113,400	113,700	114,000	114,300	114,600	114,900	115,300	115,600	115,900	116,200	116,200	116,300	116,300	116,400	116,400	116,400	116,400	116,400	116,400	116,500	27
28	116,400	116,900	117,300	117,700	118,200	118,600	119,000	119,500	119,900	120,300	120,800	120,800	120,800	120,800	120,800	120,800	120,800	120,800	120,800	120,800	120,800	28

MAY 2008

See special instruction for preventing gate overflow on page 2.

HEADWATER 812 to 816
TAILWATER Up to 774.5

TELLICO DAM
SPILLWAY DISCHARGE
IN CUBIC FEET PER SECOND

GATE ARRANGEMENT	HEADWATER ELEVATION																				GATE ARRANGEMENT
	816.0	816.1	816.2	816.3	816.4	816.5	816.6	816.7	816.8	816.9	817.0	817.1	817.2	817.3	817.4	817.5	817.6	817.7	817.8	817.9	818.0	
1																						1
2	7,360	7,370	7,380																			2
3	11,250	11,260	11,280	11,290	11,300	11,320	11,330	11,340	11,360	11,370	11,380											3
4	15,110	15,130	15,140	15,160	15,180	15,200	15,220	15,230	15,250	15,270	15,290	15,490	15,850	16,310	16,850	17,470	18,160	18,910				4
5	19,210	19,230	19,260	19,280	19,300	19,330	19,350	19,370	19,400	19,420	19,440	19,650	20,010	20,480	21,030	21,650	22,350	23,100	23,920	24,790	25,720	5
6	22,690	22,720	22,740	22,770	22,800	22,830	22,860	22,880	22,910	22,940	22,970	23,180	23,550	24,020	24,570	25,200	25,900	26,660	27,480	28,360	29,290	6
7	26,500	26,540	26,570	26,600	26,640	26,670	26,700	26,730	26,770	26,800	26,830	27,050	27,420	27,900	28,460	29,090	29,790	30,560	31,390	32,270	33,200	7
8	30,080	30,120	30,160	30,200	30,230	30,270	30,310	30,350	30,390	30,420	30,460	30,680	31,060	31,540	32,100	32,740	33,450	34,220	35,050	35,940	36,880	8
9	33,760	33,800	33,850	33,890	33,930	33,980	34,020	34,060	34,110	34,150	34,190	34,420	34,800	35,290	35,860	36,500	37,210	37,990	38,820	39,720	40,660	9
10	37,250	37,300	37,350	37,400	37,440	37,490	37,540	37,590	37,640	37,680	37,730	37,960	38,350	38,840	39,420	40,070	40,780	41,570	42,410	43,300	44,250	10
11	40,740	40,800	40,860	40,910	40,970	41,030	41,090	41,150	41,210	41,270	41,330	41,570	41,970	42,470	43,060	43,720	44,450	45,240	46,100	47,000	47,970	11
12	44,450	44,510	44,580	44,640	44,700	44,770	44,830	44,900	44,960	45,020	45,090	45,330	45,730	46,240	46,830	47,490	48,230	49,020	49,880	50,790	51,750	12
13	48,090	48,160	48,220	48,290	48,360	48,430	48,490	48,560	48,630	48,700	48,760	49,010	49,420	49,930	50,520	51,190	51,920	52,720	53,580	54,490	55,460	13
14	51,670	51,740	51,820	51,890	51,960	52,030	52,100	52,170	52,240	52,310	52,380	52,630	53,040	53,550	54,140	54,810	55,550	56,350	57,210	58,120	59,090	14
15	55,210	55,280	55,360	55,440	55,510	55,590	55,670	55,740	55,820	55,900	55,970	56,230	56,650	57,170	57,770	58,450	59,190	60,000	60,870	61,790	62,770	15
16	58,720	58,800	58,890	58,970	59,050	59,140	59,220	59,300	59,380	59,470	59,550	59,810	60,240	60,760	61,370	62,050	62,800	63,620	64,490	65,420	66,410	16
17	64,180	64,270	64,360	64,460	64,550	64,640	64,740	64,830	64,920	65,020	65,110	65,390	65,820	66,350	66,970	67,670	68,430	69,250	70,140	71,080	72,070	17
18	69,630	69,740	69,840	69,940	70,050	70,150	70,260	70,360	70,460	70,570	70,670	70,960	71,400	71,950	72,580	73,280	74,050	74,890	75,780	76,740	77,740	18
19	75,090	75,200	75,320	75,430	75,550	75,660	75,780	75,890	76,010	76,120	76,230	76,530	76,980	77,540	78,180	78,900	79,680	80,520	81,430	82,390	83,410	19
20	80,360	80,490	80,620	80,750	80,870	81,000	81,130	81,260	81,380	81,510	81,640	81,950	82,410	82,980	83,630	84,360	85,150	86,010	86,930	87,900	88,930	20
21	85,640	85,780	85,920	86,060	86,200	86,340	86,480	86,620	86,760	86,900	87,040	87,360	87,840	88,420	89,080	89,820	90,630	91,500	92,430	93,420	94,460	21
22	90,920	91,070	91,220	91,380	91,530	91,680	91,830	91,990	92,140	92,290	92,440	92,770	93,260	93,860	94,530	95,290	96,110	96,990	97,930	98,930	99,980	22
23	96,530	96,680	96,820	96,960	97,090	97,230	97,370	97,510	97,650	97,780	97,920	98,250	98,730	99,320	99,990	100,700	101,500	102,400	103,400	104,300	105,400	23
24	102,200	102,300	102,400	102,500	102,700	102,800	102,900	103,000	103,200	103,300	103,400	103,700	104,200	104,800	105,400	106,200	107,000	107,900	108,800	109,800	110,800	24
25	107,800	107,900	108,000	108,100	108,200	108,300	108,400	108,600	108,700	108,800	108,900	109,200	109,700	110,200	110,900	111,600	112,400	113,300	114,200	115,200	116,200	25
26	112,100	112,200	112,300	112,400	112,400	112,500	112,600	112,700	112,700	112,800	112,900	113,200	113,600	114,100	114,800	115,500	116,200	117,000	117,900	118,900	119,800	26
27	116,500	116,500	116,600	116,600	116,700	116,700	116,700	116,800	116,800	116,900	116,900	117,200	117,500	118,000	118,600	119,300	120,000	120,800	121,600	122,500	123,500	27
28	120,800	120,800	120,900	120,900	120,900	120,900	120,900	120,900	120,900	120,900	120,900	121,100	121,500	121,900	122,500	123,100	123,800	124,500	125,300	126,200	127,100	28

GATE ARRANGEMENT	HEADWATER ELEVATION																				GATE ARRANGEMENT
	818.0	818.1	818.2	818.3	818.4	818.5	818.6	818.7	818.8	818.9	819.0	819.1	819.2	819.3	819.4	819.5	819.6	819.7	819.8	819.9	820.0	
1																						1
2																						2
3																						3
4																						4
5	25,720	26,690	27,720	28,800	29,930																	5
6	29,290	30,270	31,300	32,380	33,510	34,690	35,910	37,170	38,480	39,830	41,220	42,650										6
7	33,200	34,190	35,230	36,310	37,450	38,630	39,850	41,120	42,430	43,790	45,190	46,620	48,100	49,620	51,180	52,780	54,410	56,090	57,800			7
8	36,880	37,870	38,910	40,010	41,140	42,330	43,560	44,830	46,150	47,510	48,910	50,350	51,840	53,360	54,920	56,530	58,170	59,840	61,560	63,310	65,100	8
9	40,660	41,660	42,710	43,800	44,950	46,130	47,370	48,650	49,970	51,340	52,740	54,190	55,680	57,210	58,780	60,380	62,030	63,710	65,430	67,190	68,980	9
10	44,250	45,250	46,310	47,410	48,560	49,750	50,990	52,280	53,600	54,970	56,380	57,840	59,330	60,860	62,440	64,050	65,700	67,390	69,110	70,880	72,670	10
11	47,970	48,990	50,060	51,180	52,350	53,560	54,820	56,120	57,470	58,860	60,290	61,760	63,270	64,810	66,400	68,030	69,690	71,400	73,140	74,910	76,730	11
12	51,750	52,780	53,850	54,970	56,140	57,360	58,620	59,930	61,280	62,670	64,100	65,580	67,100	68,650	70,250	71,880	73,560	75,270	77,020	78,810	80,630	12
13	55,460	56,490	57,560	58,690	59,860	61,080	62,350	63,650	65,010	66,400	67,840	69,310	70,830	72,390	73,990	75,630	77,300	79,020	80,770	82,560	84,380	13
14	59,090	60,120	61,200	62,320	63,500	64,720	65,980	67,290	68,640	70,040	71,470	72,950	74,460	76,020	77,610	79,240	80,920	82,620	84,370	86,160	87,980	14
15	62,770	63,800	64,880	66,010	67,190	68,410	69,680	70,990	72,340	73,740	75,180	76,660	78,180	79,740	81,340	82,980	84,660	86,370	88,130	89,920	91,740	15
16	66,410	67,440	68,530	69,660	70,850	72,070	73,350	74,670	76,030	77,430	78,870	80,360	81,890	83,450	85,060	86,700	88,390	90,110	91,870	93,660	95,500	16
17	72,070	73,120	74,220	75,360	76,550	77,790	79,080	80,400	81,780	83,190	84,640	86,140	87,680	89,250	90,870	92,520	94,220	95,950	97,720	99,520	101,400	17
18	77,740	78,800	79,900	81,060	82,260	83,510	84,810	86,140	87,520	88,950	90,410	91,920	93,470	95,050	96,680	98,340	100,000	101,800	103,600	105,400	107,200	18
19	83,410	84,470	85,590	86,760	87,970	89,230	90,530	91,880	93,270	94,710	96,180	97,700	99,260	100,900	102,500	104,200	105,900	107,600	109,400	111,200	113,100	19
20	88,930	90,010	91,140	92,320	93,540	94,810	96,130	97,490	98,890	100,300	101,800	103,400	104,900	106,500	108,200	109,900	111,600	113,400	115,200	117,000	118,900	20
21	94,460	95,550	96,690	97,880	99,110	100,400	101,700	103,100	104,500	106,000	107,500	109,000	110,600	112,200	113,900	115,600	117,300	119,100	120,900	122,700	124,600	21
22	99,980	101,100	102,200	103,400	104,700	106,000	107,300	108,700	110,100	111,600	113,100	114,700	116,300	117,900	119,600	121,300	123,000	124,800	126,600	128,500	130,400	22
23	105,400	106,500	107,600	108,800	110,100	111,400	112,700	114,100	115,500	117,000	118,500	120,100	121,600	123,300	124,900	126,700	128,400	130,200	132,000	133,900	135,800	23
24	110,800	111,900	113,000	114,200	115,500	116,800	118,100	119,500	120,900	122,400	123,900	125,400	127,000	128,700	130,300	132,000	133,800	135,600	137,400	139,300	141,200	24
25	116,200	117,300	118,500	119,700	120,900	122,200	123,500	124,900	126,300	127,800	129,300	130,800	132,400	134,000	135,700	137,400	139,200	141,000	142,800	144,600	146,500	25
26	119,800	121,000	122,100	123,400	124,600	125,900	127,300	128,700	130,100	131,600	133,100	134,700	136,300	138,000	139,700	141,400	143,200	145,000	146,800	148,700	150,600	26
27	123,500	124,600	125,800	127,100	128,300	129,700	131,100	132,500	133,900	135,400	137,000	138,600	140,200	141,900	143,600	145,300	147,100	149,000	150,800	152,700	154,700	27
28	127,100	128,300	129,500	130,800	132,100	133,400	134,800	136,300	137,800	139,300	140,900	142,500	144,100	145,800	147,500	149,300	151,100	153,000	154,800	156,800	158,700	28

HEADWATER 816 to 820
TAILWATER Up to 774.5

See special instruction for preventing gate overflow on page 2.

MAY 2008

TELLICO DAM
SPILLWAY DISCHARGE
IN CUBIC FEET PER SECOND

GATE ARRANGEMENT	HEADWATER ELEVATION																				GATE ARRANGEMENT
	800.0	800.1	800.2	800.3	800.4	800.5	800.6	800.7	800.8	800.9	801.0	801.1	801.2	801.3	801.4	801.5	801.6	801.7	801.8	801.9	802.0	
1	2,660	2,670	2,670	2,680	2,680	2,690	2,690	2,700	2,710	2,710	2,720	2,720	2,730	2,730	2,740	2,740	2,750	2,750	2,760	2,760	2,770	1
2	5,730	5,740	5,750	5,770	5,780	5,790	5,800	5,810	5,820	5,830	5,840	5,860	5,870	5,880	5,890	5,900	5,910	5,920	5,930	5,940	5,960	2
3	8,870	8,890	8,910	8,920	8,940	8,960	8,970	8,990	9,010	9,020	9,040	9,060	9,070	9,090	9,110	9,120	9,140	9,160	9,170	9,190	9,200	3
4	11,560	11,590	11,620	11,650	11,670	11,700	11,730	11,760	11,790	11,810	11,840	11,870	11,890	11,920	11,950	11,970	12,000	12,030	12,050	12,080	12,100	4
5	14,760	14,790	14,820	14,860	14,890	14,920	14,950	14,990	15,020	15,050	15,090	15,120	15,150	15,180	15,210	15,240	15,270	15,300	15,330	15,360	15,390	5
6	17,640	17,680	17,710	17,750	17,790	17,820	17,860	17,890	17,930	17,960	18,000	18,030	18,070	18,100	18,140	18,180	18,210	18,240	18,280	18,310	18,350	6
7	20,520	20,560	20,610	20,650	20,690	20,730	20,780	20,820	20,860	20,900	20,940	20,990	21,030	21,070	21,110	21,150	21,200	21,240	21,280	21,320	21,360	7
8	23,190	23,240	23,290	23,340	23,390	23,440	23,480	23,530	23,580	23,630	23,680	23,730	23,780	23,820	23,870	23,920	23,970	24,020	24,060	24,110	24,160	8
9	25,900	25,960	26,020	26,070	26,130	26,190	26,240	26,300	26,350	26,410	26,460	26,520	26,580	26,630	26,690	26,740	26,790	26,850	26,900	26,960	27,010	9
10	28,450	28,510	28,570	28,640	28,700	28,760	28,820	28,890	28,950	29,010	29,080	29,140	29,200	29,260	29,320	29,380	29,450	29,510	29,570	29,630	29,690	10
11	30,830	30,900	30,970	31,040	31,110	31,180	31,250	31,320	31,390	31,460	31,530	31,600	31,670	31,740	31,810	31,880	31,940	32,010	32,080	32,150	32,220	11
12	33,560	33,630	33,700	33,780	33,850	33,920	34,000	34,070	34,140	34,220	34,290	34,360	34,440	34,520	34,590	34,670	34,750	34,820	34,900	34,970	35,050	12
13	36,170	36,250	36,330	36,420	36,500	36,580	36,660	36,740	36,820	36,890	36,970	37,060	37,140	37,230	37,310	37,390	37,480	37,560	37,640	37,720	37,810	13
14	38,690	38,780	38,870	38,960	39,050	39,140	39,230	39,320	39,400	39,490	39,580	39,670	39,760	39,850	39,940	40,030	40,120	40,210	40,300	40,390	40,480	14
15	41,120	41,220	41,320	41,420	41,520	41,610	41,710	41,810	41,910	42,000	42,100	42,200	42,300	42,400	42,490	42,590	42,690	42,790	42,880	42,980	43,070	15
16	43,470	43,580	43,680	43,790	43,900	44,010	44,110	44,220	44,320	44,430	44,540	44,640	44,750	44,860	44,960	45,070	45,170	45,280	45,380	45,490	45,590	16
17	47,400	47,520	47,630	47,750	47,860	47,980	48,090	48,200	48,320	48,430	48,540	48,650	48,760	48,870	48,980	49,090	49,200	49,310	49,420	49,530	49,640	17
18	51,340	51,460	51,590	51,710	51,830	51,950	52,070	52,190	52,310	52,430	52,550	52,660	52,780	52,890	53,010	53,120	53,230	53,350	53,460	53,570	53,680	18
19	55,270	55,410	55,540	55,670	55,800	55,920	56,050	56,180	56,300	56,430	56,550	56,670	56,790	56,910	57,030	57,150	57,260	57,380	57,500	57,610	57,720	19
20	56,980	57,190	57,400	57,610	57,810	58,020	58,230	58,430	58,640	58,840	59,050	59,250	59,460	59,660	59,860	60,060	60,260	60,470	60,670	60,870	61,070	20
21	58,690	58,980	59,260	59,550	59,830	60,120	60,400	60,690	60,980	61,260	61,550	61,830	62,120	62,410	62,690	62,980	63,260	63,550	63,840	64,120	64,410	21
22	60,400	60,760	61,130	61,490	61,850	62,220	62,580	62,950	63,310	63,680	64,050	64,420	64,780	65,150	65,520	65,890	66,260	66,640	67,010	67,380	67,760	22
23	60,400	60,760	61,130	61,490	61,850	62,220	62,580	62,950	63,310	63,680	64,050	64,420	64,780	65,150	65,520	65,890	66,260	66,640	67,010	67,380	67,760	23
24	60,400	60,760	61,130	61,490	61,850	62,220	62,580	62,950	63,310	63,680	64,050	64,420	64,780	65,150	65,520	65,890	66,260	66,640	67,010	67,380	67,760	24
25	60,400	60,760	61,130	61,490	61,850	62,220	62,580	62,950	63,310	63,680	64,050	64,420	64,780	65,150	65,520	65,890	66,260	66,640	67,010	67,380	67,760	25
26	60,400	60,760	61,130	61,490	61,850	62,220	62,580	62,950	63,310	63,680	64,050	64,420	64,780	65,150	65,520	65,890	66,260	66,640	67,010	67,380	67,760	26
27	60,400	60,760	61,130	61,490	61,850	62,220	62,580	62,950	63,310	63,680	64,050	64,420	64,780	65,150	65,520	65,890	66,260	66,640	67,010	67,380	67,760	27
28	60,400	60,760	61,130	61,490	61,850	62,220	62,580	62,950	63,310	63,680	64,050	64,420	64,780	65,150	65,520	65,890	66,260	66,640	67,010	67,380	67,760	28

GATE ARRANGEMENT	HEADWATER ELEVATION																				GATE ARRANGEMENT
	802.0	802.1	802.2	802.3	802.4	802.5	802.6	802.7	802.8	802.9	803.0	803.1	803.2	803.3	803.4	803.5	803.6	803.7	803.8	803.9	804.0	
1	2,770	2,770	2,780	2,780	2,790	2,790	2,800	2,800	2,810	2,810	2,820	2,820	2,830	2,830	2,840	2,840	2,850	2,850	2,860	2,860	2,870	1
2	5,960	5,970	5,980	5,990	6,000	6,010	6,020	6,030	6,040	6,050	6,070	6,080	6,090	6,100	6,110	6,120	6,130	6,140	6,150	6,160	6,170	2
3	9,200	9,220	9,240	9,250	9,270	9,290	9,300	9,320	9,330	9,350	9,370	9,380	9,400	9,410	9,430	9,450	9,460	9,480	9,490	9,510	9,520	3
4	12,100	12,130	12,160	12,180	12,210	12,230	12,260	12,280	12,310	12,330	12,360	12,380	12,400	12,430	12,450	12,470	12,490	12,520	12,540	12,560	12,580	4
5	15,390	15,420	15,450	15,480	15,510	15,540	15,570	15,600	15,630	15,660	15,690	15,720	15,750	15,780	15,810	15,840	15,870	15,900	15,930	15,960	15,990	5
6	18,350	18,380	18,420	18,450	18,490	18,520	18,560	18,590	18,620	18,660	18,690	18,730	18,760	18,790	18,830	18,860	18,900	18,930	18,960	19,000	19,030	6
7	21,360	21,400	21,440	21,480	21,520	21,570	21,610	21,650	21,690	21,730	21,770	21,810	21,850	21,890	21,930	21,970	22,010	22,050	22,090	22,130	22,170	7
8	24,160	24,210	24,250	24,300	24,350	24,400	24,440	24,490	24,540	24,580	24,630	24,680	24,720	24,770	24,820	24,860	24,910	24,950	25,000	25,050	25,090	8
9	27,010	27,070	27,120	27,180	27,230	27,280	27,340	27,390	27,440	27,500	27,550	27,600	27,660	27,710	27,760	27,810	27,870	27,920	27,970	28,020	28,080	9
10	29,690	29,750	29,810	29,870	29,930	29,990	30,050	30,110	30,170	30,230	30,290	30,350	30,410	30,470	30,530	30,590	30,650	30,710	30,770	30,830	30,890	10
11	32,220	32,280	32,350	32,420	32,480	32,550	32,620	32,690	32,750	32,820	32,880	32,950	33,020	33,080	33,150	33,210	33,280	33,340	33,410	33,480	33,540	11
12	35,050	35,120	35,200	35,270	35,350	35,420	35,500	35,570	35,650	35,720	35,790	35,870	35,940	36,010	36,080	36,160	36,230	36,300	36,370	36,440	36,510	12
13	37,810	37,890	37,970	38,050	38,130	38,210	38,290	38,380	38,460	38,540	38,620	38,700	38,780	38,860	38,940	39,020	39,100	39,180	39,260	39,340	39,420	13
14	40,480	40,570	40,660	40,750	40,840	40,930	41,020	41,110	41,200	41,280	41,370	41,460	41,550	41,640	41,720	41,810	41,900	41,980	42,070	42,160	42,240	14
15	43,070	43,170	43,270	43,370	43,460	43,560	43,650	43,750	43,840	43,940	44,040	44,130	44,230	44,330	44,420	44,520	44,610	44,710	44,810	44,900	45,000	15
16	45,590	45,700	45,800	45,910	46,010	46,110	46,220	46,320	46,420	46,530	46,630	46,730	46,840	46,940	47,040	47,150	47,250	47,350	47,450	47,560	47,660	16
17	49,640	49,750	49,850	49,960	50,070	50,180	50,280	50,390	50,490	50,600	50,700	50,810	50,910	51,020	51,120	51,230	51,330	51,440	51,540	51,640	51,740	17
18	53,680	53,790	53,900	54,020	54,130	54,240	54,350	54,450	54,560	54,670	54,780	54,890	54,990	55,100	55,200	55,310	55,410	55,520	55,620	55,730	55,830	18
19	57,720	57,840	57,960	58,070	58,180	58,300	58,410	58,520	58,630	58,740	58,850	58,960	59,070	59,180	59,290	59,390	59,500	59,600	59,710	59,810	59,910	19
20	61,070	61,270	61,470	61,670	61,870	62,080	62,280	62,480	62,680	62,880	63,080	63,280	63,480	63,670	63,870	64,070	64,270	64,470	64,670	64,810	64,950	20
21	64,410	64,700	64,990	65,280	65,570	65,850	66,140	66,430	66,720	67,010	67,300	67,590	67,880	68,170	68,460	68,750	69,040	69,330	69,620	69,800	69,980	21
22	67,760	68,130	68,500	68,880	69,260	69,630	70,010	70,390	70,770	71,150	71,520	71,910	72,290	72,670	73,050	73,430	73,810	74,200	74,580	74,790	75,020	22
23	67,760	68,130	68,500	68,880	69,260	69,630	70,010	70,390	70,770	71,150	71,520	71,910	72,290	72,670	73,050	73,430	73,810	74,200	74,580	74,850	75,130	23
24	67,760	68,130	68,500	68,880	69,260	69,630	70,010	70,390	70,770	71,150	71,520	71,910	72,290	72,670	73,050	73,430	73,810	74,200	74,580	74,910	75,240	24
25	67,760	68,130	68,500	68,880	69,260	69,630	70,010	70,390	70,770	71,150	71,520	71,910	72,290	72,670	73,050	73,430	73,810	74,200	74,580	74,970	75,350	25
26	67,760	68,130	68,500	68,880	69,260	69,630	70,010	70,390	70,770	71,150	71,520	71,910	72,290	72,670	73,050	73,430	73,810	74,200	74,580	74,970	75,350	26
27	67,760	68,130	68,500	68,880	69,260	69,630	70,010	70,390	70,770	71,150	71,520	71,910	72,290	72,670	73,050	73,430	73,810	74,200	74,580	74,970	75,350	27
28	67,760	68,130	68,500	68,880	69,260	69,630	70,010	70,390	70,770	71,150	71,520	71,910	72,290	72,670	73,050	73,430	73,810	74,200	74,580	74,970	75,350	28

MAY 2008

HEADWATER 800 to 804
TAILWATER 774.51 to 775.5

TELLICO DAM
SPILLWAY DISCHARGE
IN CUBIC FEET PER SECOND

GATE ARRANGEMENT	HEADWATER ELEVATION																				GATE ARRANGEMENT
	804.0	804.1	804.2	804.3	804.4	804.5	804.6	804.7	804.8	804.9	805.0	805.1	805.2	805.3	805.4	805.5	805.6	805.7	805.8	805.9	806.0	
1	2,870	2,870	2,880	2,880	2,890	2,890	2,900	2,900	2,910	2,910	2,920	2,920	2,930	2,930	2,940	2,940	2,950	2,950	2,960	2,960	2,970	1
2	6,170	6,180	6,190	6,200	6,210	6,230	6,240	6,250	6,260	6,270	6,280	6,290	6,300	6,310	6,320	6,330	6,340	6,350	6,360	6,370	6,380	2
3	9,520	9,540	9,560	9,570	9,590	9,600	9,620	9,630	9,650	9,660	9,680	9,700	9,710	9,730	9,740	9,760	9,770	9,790	9,800	9,820	9,830	3
4	12,580	12,610	12,640	12,660	12,690	12,720	12,740	12,770	12,800	12,830	12,850	12,880	12,900	12,920	12,950	12,970	13,000	13,020	13,040	13,070	13,090	4
5	15,990	16,020	16,050	16,080	16,110	16,140	16,170	16,200	16,230	16,250	16,280	16,310	16,340	16,370	16,400	16,430	16,460	16,490	16,520	16,540	16,570	5
6	19,030	19,060	19,100	19,130	19,160	19,200	19,230	19,260	19,300	19,330	19,360	19,390	19,430	19,460	19,490	19,530	19,560	19,590	19,620	19,650	19,690	6
7	22,170	22,210	22,250	22,290	22,330	22,370	22,410	22,440	22,480	22,520	22,560	22,600	22,640	22,680	22,720	22,760	22,790	22,830	22,870	22,910	22,950	7
8	25,090	25,140	25,180	25,230	25,270	25,320	25,360	25,410	25,450	25,500	25,540	25,590	25,630	25,680	25,720	25,770	25,810	25,860	25,900	25,950	25,990	8
9	28,080	28,130	28,180	28,230	28,280	28,340	28,390	28,440	28,490	28,540	28,590	28,650	28,700	28,750	28,800	28,850	28,900	28,950	29,000	29,050	29,100	9
10	30,890	30,940	31,000	31,060	31,120	31,180	31,230	31,290	31,350	31,410	31,470	31,520	31,580	31,640	31,690	31,750	31,810	31,870	31,920	31,980	32,030	10
11	33,540	33,610	33,670	33,730	33,800	33,860	33,930	33,990	34,060	34,120	34,180	34,250	34,310	34,370	34,440	34,500	34,560	34,630	34,690	34,750	34,810	11
12	36,510	36,590	36,660	36,730	36,800	36,870	36,940	37,010	37,090	37,160	37,230	37,300	37,370	37,440	37,510	37,580	37,650	37,720	37,790	37,860	37,930	12
13	39,420	39,500	39,580	39,660	39,730	39,810	39,890	39,970	40,040	40,120	40,200	40,280	40,350	40,430	40,510	40,590	40,660	40,740	40,820	40,890	40,970	13
14	42,240	42,330	42,420	42,500	42,590	42,680	42,760	42,850	42,930	43,020	43,110	43,190	43,280	43,360	43,450	43,530	43,620	43,700	43,780	43,870	43,950	14
15	45,000	45,090	45,180	45,280	45,370	45,460	45,560	45,650	45,740	45,830	45,930	46,020	46,110	46,200	46,300	46,390	46,480	46,570	46,660	46,760	46,850	15
16	47,660	47,760	47,860	47,970	48,070	48,170	48,270	48,380	48,480	48,580	48,680	48,780	48,880	48,980	49,080	49,180	49,280	49,380	49,480	49,580	49,680	16
17	51,740	51,850	51,960	52,070	52,180	52,290	52,400	52,500	52,610	52,720	52,820	52,940	53,050	53,160	53,270	53,380	53,490	53,600	53,710	53,820	53,930	17
18	55,830	55,940	56,060	56,170	56,290	56,400	56,520	56,630	56,740	56,860	56,970	57,090	57,210	57,340	57,460	57,580	57,700	57,820	57,940	58,060	58,180	18
19	59,910	60,040	60,160	60,280	60,400	60,520	60,640	60,760	60,880	61,000	61,110	61,250	61,380	61,510	61,650	61,780	61,910	62,040	62,170	62,300	62,430	19
20	64,950	65,100	65,260	65,410	65,570	65,720	65,870	66,020	66,170	66,330	66,480	66,640	66,800	66,960	67,110	67,270	67,430	67,590	67,750	67,900	68,060	20
21	69,980	70,170	70,360	70,550	70,730	70,920	71,100	71,290	71,470	71,660	71,840	72,030	72,210	72,400	72,580	72,770	72,950	73,140	73,320	73,500	73,690	21
22	75,020	75,240	75,460	75,680	75,900	76,120	76,340	76,550	76,770	76,990	77,200	77,410	77,630	77,840	78,050	78,260	78,470	78,690	78,890	79,100	79,310	22
23	75,130	75,410	75,680	75,960	76,230	76,510	76,780	77,060	77,330	77,610	77,880	78,150	78,420	78,700	78,970	79,240	79,510	79,790	80,060	80,330	80,600	23
24	75,240	75,570	75,900	76,230	76,570	76,900	77,230	77,560	77,890	78,220	78,560	78,890	79,220	79,550	79,890	80,220	80,550	80,890	81,220	81,550	81,890	24
25	75,350	75,740	76,120	76,510	76,900	77,290	77,680	78,060	78,450	78,840	79,240	79,630	80,020	80,410	80,800	81,200	81,590	81,990	82,380	82,780	83,170	25
26	75,350	75,740	76,120	76,510	76,900	77,290	77,680	78,060	78,450	78,840	79,240	79,630	80,020	80,410	80,800	81,200	81,590	81,990	82,380	82,780	83,170	26
27	75,350	75,740	76,120	76,510	76,900	77,290	77,680	78,060	78,450	78,840	79,240	79,630	80,020	80,410	80,800	81,200	81,590	81,990	82,380	82,780	83,170	27
28	75,350	75,740	76,120	76,510	76,900	77,290	77,680	78,060	78,450	78,840	79,240	79,630	80,020	80,410	80,800	81,200	81,590	81,990	82,380	82,780	83,170	28

GATE ARRANGEMENT	HEADWATER ELEVATION																				GATE ARRANGEMENT
	806.0	806.1	806.2	806.3	806.4	806.5	806.6	806.7	806.8	806.9	807.0	807.1	807.2	807.3	807.4	807.5	807.6	807.7	807.8	807.9	808.0	
1	2,970	2,970	2,970	2,980	2,980	2,990	2,990	3,000	3,000	3,010	3,010	3,020	3,020	3,030	3,030	3,040	3,040	3,050	3,050	3,050	3,060	1
2	6,380	6,390	6,400	6,410	6,420	6,430	6,440	6,450	6,460	6,470	6,480	6,490	6,500	6,510	6,520	6,530	6,540	6,550	6,560	6,570	6,580	2
3	9,830	9,850	9,860	9,880	9,890	9,910	9,920	9,940	9,950	9,970	9,980	10,000	10,010	10,030	10,040	10,060	10,070	10,090	10,100	10,120	10,130	3
4	13,090	13,120	13,140	13,160	13,190	13,210	13,230	13,260	13,280	13,310	13,330	13,350	13,370	13,400	13,420	13,440	13,460	13,490	13,510	13,530	13,550	4
5	16,570	16,600	16,630	16,670	16,700	16,730	16,760	16,790	16,820	16,850	16,880	16,910	16,930	16,960	16,980	17,010	17,040	17,060	17,090	17,120	17,140	5
6	19,690	19,720	19,750	19,780	19,820	19,850	19,880	19,910	19,940	19,980	20,010	20,040	20,070	20,100	20,130	20,170	20,200	20,230	20,260	20,290	20,320	6
7	22,950	22,990	23,020	23,060	23,100	23,140	23,180	23,210	23,250	23,290	23,330	23,370	23,400	23,440	23,480	23,520	23,550	23,590	23,630	23,660	23,700	7
8	25,990	26,030	26,080	26,120	26,170	26,210	26,250	26,300	26,340	26,380	26,430	26,470	26,510	26,560	26,600	26,640	26,690	26,730	26,770	26,820	26,860	8
9	29,100	29,150	29,200	29,250	29,300	29,350	29,400	29,450	29,500	29,550	29,600	29,650	29,700	29,750	29,800	29,850	29,900	29,950	29,990	30,040	30,090	9
10	32,030	32,090	32,150	32,200	32,260	32,320	32,370	32,430	32,480	32,540	32,590	32,650	32,710	32,760	32,820	32,870	32,930	32,980	33,040	33,090	33,140	10
11	34,810	34,880	34,940	35,000	35,060	35,120	35,190	35,250	35,310	35,370	35,430	35,490	35,560	35,620	35,680	35,740	35,800	35,860	35,920	35,980	36,040	11
12	37,930	38,000	38,070	38,140	38,210	38,270	38,340	38,410	38,480	38,550	38,620	38,680	38,750	38,820	38,890	38,960	39,020	39,090	39,160	39,230	39,290	12
13	40,970	41,050	41,120	41,200	41,280	41,350	41,430	41,500	41,580	41,650	41,730	41,800	41,880	41,950	42,030	42,100	42,180	42,250	42,330	42,400	42,470	13
14	43,950	44,040	44,120	44,200	44,290	44,370	44,450	44,530	44,620	44,700	44,780	44,860	44,950	45,030	45,110	45,190	45,270	45,350	45,430	45,520	45,600	14
15	46,850	46,940	47,030	47,120	47,210	47,300	47,390	47,480	47,570	47,660	47,750	47,840	47,930	48,020	48,110	48,200	48,280	48,370	48,460	48,550	48,640	15
16	49,680	49,780	49,880	49,970	50,070	50,170	50,270	50,370	50,460	50,560	50,660	50,750	50,850	50,950	51,040	51,140	51,230	51,330	51,430	51,520	51,620	16
17	53,930	54,040	54,150	54,270	54,380	54,490	54,600	54,710	54,820	54,930	55,040	55,150	55,260	55,370	55,480	55,590	55,700	55,810	55,910	56,020	56,130	17
18	58,180	58,310	58,430	58,560	58,680	58,800	58,930	59,050	59,180	59,300	59,420	59,540	59,670	59,790	59,910	60,040	60,160	60,280	60,400	60,520	60,640	18
19	62,430	62,570	62,710	62,850	62,990	63,120	63,260	63,400	63,530	63,670	63,800	63,940	64,080	64,210	64,350	64,480	64,620	64,760	64,890	65,020	65,160	19
20	68,060	68,190	68,320	68,450	68,570	68,700	68,830	68,950	69,080	69,200	69,330	69,450	69,570	69,690	69,810	69,930	70,050	70,170	70,290	70,410	70,530	20
21	73,690	73,810	73,920	74,040	74,160	74,280	74,390	74,510	74,620	74,740	74,850	74,960	75,060	75,170	75,280	75,380	75,490	75,590	75,690	75,790	75,900	21
22	79,310	79,420	79,530	79,640	79,750	79,860	79,960	80,070	80,170	80,270	80,370	80,470	80,560	80,650	80,740	80,830	80,920	81,010	81,090	81,180	81,260	22
23	80,600	80,800	81,010	81,220	81,420	81,620	81,830	82,030	82,230	82,430	82,640	82,830	83,030	83,220	83,420	83,610	83,810	84,000	84,190	84,380	84,580	23
24	81,890	82,190	82,490	82,790	83,090	83,390	83,690	83,990	84,300	84,600	84,900	85,200	85,500	85,800	86,090	86,390	86,690	86,990	87,290	87,590	87,890	24
25	83,170	83,570	83,970	84,360	84,760	85,160	85,560	85,960	86,360	86,760	87,160	87,560	87,970	88,370	88,770	89,170	89,580	89,980	90,390	90,790	91,200	25
26	83,170	83,570	83,970	84,360	84,760	85,160	85,560	85,960	86,360	86,760	87,160	87,560	87,970	88,370	88,770	89,170	89,580	89,980	90,390	90,790	91,200	26
27	83,170	83,570	83,970	84,360	84,760	85,160	85,560	85,960	86,360	86,760	87,160	87,560	87,970	88,370	88,770	89,170	89,580	89,980	90,390	90,790	91,200	27
28	83,170	83,570	83,970	84,360	84,760	85,160	85,560	85,960	86,360	86,760	87,160	87,560	87,970	88,370	88,770	89,170	89,580	89,980	90,390	90,790	91,200	28

HEADWATER 804 to 808
TAILWATER 774.51 to 775.5

MAY 2008

TELLICO DAM
SPILLWAY DISCHARGE
IN CUBIC FEET PER SECOND

HEADWATER ELEVATION

GATE ARRANGEMENT	808.0	808.1	808.2	808.3	808.4	808.5	808.6	808.7	808.8	808.9	809.0	809.1	809.2	809.3	809.4	809.5	809.6	809.7	809.8	809.9	810.0	GATE ARRANGEMENT
1	3,060	3,060	3,070	3,070	3,080	3,080	3,090	3,090	3,100	3,100	3,110	3,110	3,110	3,120	3,120	3,130	3,130	3,140	3,140	3,150	3,150	1
2	6,580	6,590	6,600	6,610	6,620	6,630	6,640	6,650	6,660	6,670	6,680	6,690	6,700	6,710	6,720	6,730	6,740	6,750	6,760	6,770	6,780	2
3	10,130	10,150	10,160	10,180	10,190	10,210	10,220	10,240	10,250	10,260	10,280	10,290	10,310	10,320	10,340	10,350	10,370	10,380	10,390	10,410	10,420	3
4	13,550	13,580	13,600	13,620	13,640	13,660	13,690	13,710	13,730	13,750	13,770	13,790	13,810	13,830	13,850	13,870	13,890	13,910	13,930	13,950	13,970	4
5	17,140	17,170	17,200	17,230	17,250	17,280	17,310	17,340	17,360	17,390	17,420	17,450	17,470	17,500	17,520	17,550	17,570	17,600	17,620	17,650	17,670	5
6	20,320	20,350	20,390	20,420	20,450	20,480	20,510	20,540	20,570	20,600	20,630	20,660	20,700	20,730	20,760	20,790	20,820	20,850	20,880	20,910	20,940	6
7	23,700	23,740	23,780	23,810	23,850	23,890	23,920	23,960	24,000	24,030	24,070	24,110	24,140	24,180	24,220	24,250	24,290	24,320	24,360	24,400	24,430	7
8	26,860	26,900	26,940	26,990	27,030	27,070	27,110	27,160	27,200	27,240	27,280	27,320	27,370	27,410	27,450	27,490	27,530	27,580	27,620	27,660	27,700	8
9	30,090	30,140	30,190	30,240	30,290	30,330	30,380	30,430	30,480	30,530	30,570	30,620	30,670	30,720	30,770	30,810	30,860	30,910	30,960	31,000	31,050	9
10	33,140	33,200	33,250	33,310	33,360	33,420	33,470	33,520	33,580	33,630	33,690	33,740	33,790	33,850	33,900	33,950	34,010	34,060	34,110	34,160	34,220	10
11	36,040	36,100	36,160	36,220	36,280	36,340	36,400	36,460	36,520	36,580	36,640	36,700	36,760	36,820	36,880	36,940	37,000	37,060	37,120	37,180	37,240	11
12	39,290	39,360	39,430	39,490	39,560	39,630	39,690	39,760	39,820	39,890	39,960	40,020	40,090	40,150	40,220	40,280	40,350	40,410	40,480	40,540	40,610	12
13	42,470	42,550	42,620	42,690	42,770	42,840	42,910	42,990	43,060	43,130	43,200	43,280	43,350	43,420	43,490	43,570	43,640	43,710	43,780	43,850	43,920	13
14	45,600	45,680	45,760	45,840	45,920	46,000	46,080	46,160	46,240	46,320	46,400	46,480	46,550	46,630	46,710	46,790	46,870	46,950	47,030	47,100	47,180	14
15	48,640	48,720	48,810	48,900	48,990	49,070	49,160	49,250	49,330	49,420	49,510	49,590	49,680	49,760	49,850	49,940	50,020	50,110	50,190	50,280	50,360	15
16	51,620	51,710	51,810	51,900	52,000	52,090	52,180	52,280	52,370	52,460	52,560	52,650	52,740	52,840	52,930	53,020	53,110	53,210	53,300	53,390	53,480	16
17	56,130	56,240	56,350	56,450	56,560	56,670	56,770	56,880	56,990	57,090	57,200	57,310	57,410	57,520	57,620	57,730	57,830	57,940	58,040	58,150	58,250	17
18	60,640	60,770	60,890	61,010	61,130	61,250	61,370	61,490	61,600	61,720	61,840	61,960	62,080	62,200	62,310	62,430	62,550	62,670	62,780	62,900	63,020	18
19	65,160	65,290	65,430	65,560	65,690	65,830	65,960	66,090	66,220	66,350	66,480	66,620	66,750	66,880	67,010	67,140	67,270	67,400	67,530	67,650	67,780	19
20	70,530	70,650	70,760	70,880	71,000	71,110	71,230	71,350	71,460	71,570	71,690	71,800	71,910	72,020	72,130	72,240	72,340	72,450	72,560	72,670	72,770	20
21	75,900	76,000	76,100	76,200	76,300	76,400	76,500	76,600	76,700	76,800	76,890	76,980	77,070	77,160	77,250	77,340	77,420	77,510	77,590	77,680	77,760	21
22	81,260	81,350	81,440	81,520	81,610	81,690	81,780	81,860	81,940	82,020	82,100	82,170	82,230	82,300	82,370	82,430	82,500	82,560	82,630	82,690	82,750	22
23	84,580	84,770	84,960	85,160	85,350	85,540	85,730	85,920	86,110	86,300	86,490	86,680	86,860	87,040	87,220	87,410	87,590	87,770	87,950	88,130	88,310	23
24	87,890	88,190	88,490	88,790	89,090	89,390	89,690	89,990	90,290	90,590	90,890	91,190	91,490	91,780	92,080	92,380	92,670	92,970	93,270	93,570	93,860	24
25	91,200	91,610	92,010	92,420	92,830	93,240	93,650	94,060	94,470	94,880	95,290	95,700	96,110	96,520	96,940	97,350	97,760	98,180	98,590	99,010	99,420	25
26	91,200	91,610	92,010	92,420	92,830	93,240	93,650	94,060	94,470	94,880	95,290	95,700	96,110	96,520	96,940	97,350	97,760	98,180	98,590	99,010	99,420	26
27	91,200	91,610	92,010	92,420	92,830	93,240	93,650	94,060	94,470	94,880	95,290	95,700	96,110	96,520	96,940	97,350	97,760	98,180	98,590	99,010	99,420	27
28	91,200	91,610	92,010	92,420	92,830	93,240	93,650	94,060	94,470	94,880	95,290	95,700	96,110	96,520	96,940	97,350	97,760	98,180	98,590	99,010	99,420	28

HEADWATER ELEVATION

GATE ARRANGEMENT	810.0	810.1	810.2	810.3	810.4	810.5	810.6	810.7	810.8	810.9	811.0	811.1	811.2	811.3	811.4	811.5	811.6	811.7	811.8	811.9	812.0	GATE ARRANGEMENT
1	3,150	3,160	3,160	3,160	3,170	3,170	3,180	3,180	3,190	3,190	3,200	3,200	3,200	3,210	3,210	3,220	3,220	3,230	3,230	3,240	3,240	1
2	6,780	6,790	6,800	6,810	6,820	6,830	6,840	6,850	6,860	6,870	6,880	6,890	6,900	6,910	6,920	6,920	6,930	6,940	6,950	6,960	6,970	2
3	10,420	10,440	10,450	10,470	10,480	10,500	10,510	10,520	10,540	10,550	10,570	10,580	10,590	10,610	10,620	10,640	10,650	10,660	10,680	10,690	10,710	3
4	13,970	13,990	14,010	14,030	14,050	14,070	14,090	14,110	14,130	14,150	14,170	14,190	14,210	14,230	14,250	14,260	14,280	14,300	14,320	14,340	14,360	4
5	17,670	17,700	17,730	17,750	17,780	17,800	17,830	17,850	17,880	17,900	17,930	17,950	17,980	18,000	18,030	18,050	18,070	18,100	18,120	18,150	18,170	5
6	20,940	20,970	21,000	21,030	21,060	21,090	21,120	21,150	21,180	21,210	21,240	21,270	21,300	21,330	21,360	21,390	21,420	21,450	21,480	21,510	21,540	6
7	24,430	24,470	24,500	24,540	24,580	24,610	24,650	24,680	24,720	24,750	24,790	24,820	24,860	24,900	24,930	24,970	25,000	25,040	25,070	25,110	25,140	7
8	27,700	27,740	27,780	27,820	27,870	27,910	27,950	27,990	28,030	28,070	28,110	28,150	28,190	28,230	28,270	28,310	28,350	28,400	28,440	28,480	28,520	8
9	31,050	31,100	31,140	31,190	31,240	31,280	31,330	31,380	31,420	31,470	31,520	31,560	31,610	31,660	31,700	31,750	31,800	31,840	31,890	31,930	31,980	9
10	34,220	34,270	34,320	34,380	34,430	34,480	34,530	34,590	34,640	34,690	34,740	34,790	34,850	34,900	34,950	35,000	35,050	35,100	35,160	35,210	35,260	10
11	37,240	37,300	37,360	37,420	37,480	37,540	37,600	37,660	37,720	37,780	37,840	37,900	37,960	38,020	38,080	38,140	38,200	38,260	38,310	38,370	38,430	11
12	40,610	40,680	40,740	40,810	40,880	40,940	41,010	41,080	41,140	41,210	41,270	41,340	41,410	41,470	41,540	41,600	41,670	41,740	41,800	41,870	41,930	12
13	43,920	44,000	44,070	44,140	44,210	44,280	44,360	44,430	44,500	44,570	44,640	44,710	44,790	44,860	44,930	45,000	45,070	45,140	45,210	45,280	45,350	13
14	47,180	47,260	47,340	47,420	47,490	47,570	47,650	47,720	47,800	47,880	47,960	48,030	48,110	48,180	48,260	48,340	48,410	48,490	48,560	48,640	48,720	14
15	50,360	50,450	50,530	50,610	50,700	50,780	50,870	50,950	51,030	51,120	51,200	51,280	51,370	51,450	51,530	51,620	51,700	51,780	51,860	51,940	52,030	15
16	53,480	53,570	53,670	53,760	53,850	53,940	54,030	54,120	54,210	54,300	54,390	54,480	54,570	54,660	54,750	54,840	54,930	55,020	55,110	55,200	55,280	16
17	58,250	58,350	58,460	58,560	58,660	58,770	58,870	58,970	59,080	59,180	59,280	59,380	59,480	59,590	59,690	59,790	59,890	59,990	60,090	60,190	60,290	17
18	63,020	63,130	63,250	63,360	63,480	63,600	63,710	63,830	63,940	64,050	64,170	64,280	64,400	64,510	64,620	64,740	64,850	64,960	65,070	65,190	65,300	18
19	67,780	67,910	68,040	68,170	68,300	68,420	68,550	68,680	68,800	68,930	69,060	69,180	69,310	69,430	69,560	69,680	69,810	69,930	70,060	70,180	70,310	19
20	72,770	72,880	72,990	73,100	73,220	73,320	73,430	73,540	73,650	73,760	73,870	73,990	74,120	74,250	74,370	74,500	74,630	74,750	74,880	75,000	75,130	20
21	77,760	77,850	77,950	78,040	78,130	78,230	78,320	78,410	78,500	78,590	78,680	78,810	78,930	79,060	79,190	79,320	79,440	79,570	79,700	79,820	79,950	21
22	82,750	82,830	82,900	82,980	83,050	83,130	83,200	83,270	83,350	83,420	83,490	83,620	83,750	83,880	84,000	84,130	84,260	84,390	84,510	84,640	84,770	22
23	88,310	88,500	88,690	88,880	89,070	89,250	89,440	89,630	89,820	90,010	90,190	90,420	90,650	90,820	90,980	91,150	91,320	91,480	91,650	91,810	91,970	23
24	93,860	94,170	94,470	94,770	95,080	95,380	95,680	95,990	96,290	96,590	96,900	97,220	97,550	97,760	97,960	98,170	98,370	98,580	98,780	98,980	99,180	24
25	99,420	99,840	100,300	100,700	101,100	101,500	101,900	102,300	102,800	103,200	103,600	104,000	104,400	104,700	104,900	105,200	105,400	105,700	105,900	106,100	106,400	25
26	99,420	99,840	100,300	100,700	101,100	101,500	101,900	102,300	102,800	103,200	103,600	104,000	104,400	104,800	105,100	105,400	105,700	106,000	106,300	106,600	106,900	26
27	99,420	99,840	100,300	100,700	101,100	101,500	101,900	102,300	102,800	103,200	103,600	104,000	104,400	104,800	105,200	105,500	105,900	106,300	106,600	107,000	107,400	27
28	99,420	99,840	100,300	100,700	101,100	101,500	101,900	102,300	102,800	103,200	103,600	104,000	104,400	104,900	105,300	105,700	106,100	106,600	107,000	107,400	107,800	28

MAY 2008

HEADWATER 808 to 812
TAILWATER 774.51 to 775.5

TELLICO DAM
SPILLWAY DISCHARGE
IN CUBIC FEET PER SECOND

GATE ARRANGEMENT	HEADWATER ELEVATION																				GATE ARRANGEMENT
	812.0	812.1	812.2	812.3	812.4	812.5	812.6	812.7	812.8	812.9	813.0	813.1	813.2	813.3	813.4	813.5	813.6	813.7	813.8	813.9	814.0	
1	3,240	3,240	3,250	3,250	3,260	3,260	3,270	3,270	3,270	3,280	3,280	3,290	3,290	3,300	3,300	3,300	3,310	3,310	3,320	3,320	3,330	1
2	6,970	6,980	6,990	7,000	7,010	7,020	7,030	7,040	7,050	7,060	7,070	7,070	7,080	7,090	7,100	7,110	7,120	7,130	7,140	7,150	7,160	2
3	10,710	10,720	10,730	10,750	10,760	10,780	10,790	10,800	10,820	10,830	10,850	10,860	10,870	10,890	10,900	10,910	10,930	10,940	10,960	10,970	10,980	3
4	14,360	14,380	14,400	14,420	14,440	14,460	14,470	14,490	14,510	14,530	14,550	14,570	14,590	14,610	14,630	14,640	14,660	14,680	14,700	14,720	14,740	4
5	18,170	18,200	18,220	18,250	18,270	18,300	18,320	18,340	18,370	18,390	18,420	18,440	18,470	18,500	18,520	18,550	18,580	18,600	18,630	18,650	18,680	5
6	21,540	21,570	21,600	21,630	21,660	21,690	21,720	21,740	21,770	21,800	21,830	21,860	21,890	21,920	21,950	21,980	22,010	22,030	22,060	22,090	22,120	6
7	25,140	25,180	25,210	25,250	25,280	25,320	25,350	25,390	25,420	25,450	25,490	25,520	25,560	25,590	25,630	25,660	25,690	25,730	25,760	25,800	25,830	7
8	28,520	28,560	28,600	28,640	28,680	28,720	28,760	28,800	28,840	28,880	28,920	28,960	28,990	29,030	29,070	29,110	29,150	29,190	29,230	29,270	29,310	8
9	31,980	32,020	32,070	32,120	32,160	32,210	32,250	32,300	32,340	32,390	32,430	32,480	32,520	32,570	32,610	32,660	32,700	32,750	32,790	32,840	32,880	9
10	35,260	35,310	35,360	35,410	35,460	35,510	35,560	35,610	35,670	35,720	35,770	35,820	35,870	35,920	35,970	36,020	36,070	36,120	36,170	36,220	36,270	10
11	38,430	38,490	38,550	38,610	38,670	38,720	38,780	38,840	38,900	38,950	39,010	39,070	39,130	39,180	39,240	39,300	39,360	39,410	39,470	39,530	39,580	11
12	41,930	41,990	42,060	42,120	42,180	42,240	42,310	42,370	42,430	42,490	42,550	42,620	42,680	42,750	42,810	42,880	42,940	43,000	43,070	43,130	43,190	12
13	45,350	45,420	45,490	45,560	45,630	45,700	45,760	45,830	45,900	45,970	46,040	46,100	46,170	46,230	46,300	46,360	46,430	46,490	46,560	46,620	46,690	13
14	48,720	48,790	48,870	48,940	49,020	49,090	49,170	49,240	49,320	49,390	49,460	49,540	49,610	49,690	49,760	49,830	49,910	49,980	50,060	50,130	50,200	14
15	52,030	52,110	52,190	52,270	52,350	52,430	52,520	52,600	52,680	52,760	52,840	52,920	53,000	53,080	53,160	53,240	53,320	53,400	53,480	53,560	53,640	15
16	55,280	55,370	55,460	55,550	55,640	55,730	55,810	55,900	55,990	56,080	56,160	56,250	56,340	56,420	56,510	56,600	56,680	56,770	56,860	56,940	57,030	16
17	60,290	60,390	60,490	60,590	60,690	60,790	60,890	60,990	61,090	61,190	61,290	61,390	61,480	61,580	61,680	61,780	61,880	61,970	62,070	62,170	62,260	17
18	65,300	65,410	65,520	65,630	65,750	65,860	65,970	66,080	66,190	66,300	66,410	66,520	66,630	66,740	66,850	66,960	67,070	67,180	67,280	67,390	67,500	18
19	70,310	70,430	70,550	70,680	70,800	70,920	71,040	71,170	71,290	71,410	71,530	71,650	71,770	71,900	72,020	72,140	72,260	72,380	72,500	72,620	72,740	19
20	75,130	75,260	75,390	75,520	75,650	75,780	75,910	76,040	76,170	76,290	76,420	76,560	76,690	76,820	76,960	77,090	77,220	77,360	77,490	77,620	77,750	20
21	79,950	80,080	80,220	80,360	80,500	80,630	80,770	80,910	81,040	81,180	81,310	81,460	81,610	81,750	81,900	82,050	82,190	82,340	82,480	82,630	82,770	21
22	84,770	84,910	85,060	85,200	85,350	85,490	85,630	85,780	85,920	86,060	86,200	86,360	86,520	86,680	86,840	87,000	87,160	87,320	87,470	87,630	87,790	22
23	91,970	92,070	92,170	92,270	92,360	92,460	92,550	92,650	92,740	92,830	92,920	93,030	93,150	93,260	93,370	93,480	93,590	93,690	93,800	93,910	94,020	23
24	99,180	99,230	99,280	99,330	99,380	99,430	99,470	99,520	99,560	99,600	99,640	99,700	99,770	99,830	99,890	99,950	100,000	100,100	100,100	100,200	100,200	24
25	106,400	106,400	106,400	106,400	106,400	106,400	106,400	106,400	106,400	106,400	106,400	106,400	106,400	106,400	106,400	106,400	106,400	106,400	106,500	106,500	106,500	25
26	106,900	107,000	107,200	107,300	107,400	107,600	107,700	107,900	108,000	108,100	108,300	108,400	108,600	108,700	108,900	109,000	109,200	109,300	109,500	109,600	109,800	26
27	107,400	107,600	107,900	108,200	108,500	108,800	109,100	109,300	109,600	109,900	110,200	110,500	110,800	111,100	111,400	111,600	111,900	112,200	112,500	112,800	113,100	27
28	107,800	108,300	108,700	109,100	109,500	110,000	110,400	110,800	111,200	111,700	112,100	112,500	113,000	113,400	113,800	114,300	114,700	115,100	115,600	116,000	116,400	28

GATE ARRANGEMENT	HEADWATER ELEVATION																				GATE ARRANGEMENT
	814.0	814.1	814.2	814.3	814.4	814.5	814.6	814.7	814.8	814.9	815.0	815.1	815.2	815.3	815.4	815.5	815.6	815.7	815.8	815.9	816.0	
1	3,330	3,330	3,330	3,340	3,340	3,350	3,350	3,360	3,360	3,360	3,370	3,370	3,380	3,380	3,390	3,390						1
2	7,160	7,170	7,180	7,190	7,190	7,200	7,210	7,220	7,230	7,240	7,250	7,260	7,270	7,280	7,290	7,290	7,300	7,310	7,320	7,330	7,340	2
3	10,980	11,000	11,010	11,020	11,040	11,050	11,060	11,080	11,090	11,100	11,120	11,130	11,140	11,160	11,170	11,180	11,200	11,210	11,220	11,240	11,250	3
4	14,740	14,760	14,780	14,790	14,810	14,830	14,850	14,870	14,890	14,910	14,920	14,940	14,960	14,980	15,000	15,020	15,030	15,050	15,070	15,090	15,110	4
5	18,680	18,710	18,740	18,760	18,790	18,820	18,850	18,880	18,900	18,930	18,960	18,980	19,010	19,030	19,060	19,080	19,110	19,130	19,160	19,180	19,210	5
6	22,120	22,150	22,180	22,210	22,240	22,260	22,290	22,320	22,350	22,380	22,410	22,440	22,460	22,490	22,520	22,550	22,580	22,600	22,630	22,660	22,690	6
7	25,830	25,870	25,900	25,930	25,970	26,000	26,030	26,070	26,100	26,140	26,170	26,200	26,240	26,270	26,300	26,340	26,370	26,400	26,440	26,470	26,500	7
8	29,310	29,350	29,390	29,430	29,470	29,500	29,540	29,580	29,620	29,660	29,700	29,740	29,780	29,810	29,850	29,890	29,930	29,970	30,010	30,040	30,080	8
9	32,880	32,930	32,970	33,010	33,060	33,100	33,150	33,190	33,240	33,280	33,320	33,370	33,410	33,460	33,500	33,540	33,590	33,630	33,670	33,720	33,760	9
10	36,270	36,320	36,370	36,420	36,470	36,520	36,570	36,620	36,660	36,710	36,760	36,810	36,860	36,910	36,960	37,010	37,060	37,110	37,150	37,200	37,250	10
11	39,580	39,640	39,700	39,750	39,810	39,870	39,930	39,980	40,040	40,100	40,150	40,210	40,270	40,330	40,390	40,450	40,500	40,560	40,620	40,680	40,740	11
12	43,190	43,260	43,320	43,380	43,440	43,500	43,570	43,630	43,690	43,750	43,810	43,880	43,940	44,000	44,070	44,130	44,190	44,260	44,320	44,380	44,450	12
13	46,690	46,750	46,820	46,890	46,950	47,020	47,090	47,150	47,220	47,290	47,350	47,430	47,500	47,570	47,650	47,720	47,790	47,870	47,940	48,010	48,090	13
14	50,200	50,280	50,350	50,430	50,510	50,580	50,660	50,730	50,810	50,880	50,960	51,030	51,100	51,170	51,240	51,320	51,390	51,460	51,530	51,600	51,670	14
15	53,640	53,720	53,800	53,880	53,960	54,040	54,110	54,190	54,270	54,350	54,430	54,510	54,590	54,660	54,740	54,820	54,900	54,970	55,050	55,130	55,210	15
16	57,030	57,110	57,200	57,290	57,370	57,460	57,540	57,630	57,710	57,800	57,880	57,970	58,050	58,130	58,220	58,300	58,390	58,470	58,550	58,640	58,720	16
17	62,260	62,360	62,460	62,560	62,650	62,750	62,840	62,940	63,040	63,130	63,230	63,320	63,420	63,510	63,610	63,700	63,800	63,890	63,990	64,080	64,180	17
18	67,500	67,610	67,720	67,820	67,930	68,040	68,150	68,250	68,360	68,470	68,570	68,680	68,790	68,890	69,000	69,100	69,210	69,320	69,420	69,530	69,630	18
19	72,740	72,860	72,980	73,090	73,210	73,330	73,450	73,570	73,690	73,800	73,920	74,040	74,160	74,270	74,390	74,510	74,620	74,740	74,860	74,970	75,090	19
20	77,750	77,890	78,020	78,150	78,280	78,420	78,550	78,680	78,810	78,940	79,070	79,200	79,330	79,460	79,590	79,720	79,850	79,980	80,110	80,240	80,360	20
21	82,770	82,920	83,060	83,210	83,350	83,500	83,640	83,790	83,930	84,080	84,220	84,360	84,510	84,650	84,790	84,930	85,070	85,220	85,360	85,500	85,640	21
22	87,790	87,950	88,110	88,270	88,420	88,580	88,740	88,900	89,050	89,210	89,370	89,520	89,680	89,840	89,990	90,150	90,300	90,460	90,610	90,760	90,920	22
23	94,020	94,140	94,260	94,380	94,510	94,630	94,750	94,870	94,990	95,110	95,220	95,360	95,490	95,620	95,750	95,890	96,020	96,150	96,280	96,410	96,530	23
24	100,200	100,300	100,400	100,500	100,600	100,700	100,800	100,800	100,900	101,000	101,100	101,200	101,300	101,400	101,500	101,600	101,700	101,800	101,900	102,000	102,200	24
25	106,500	106,500	106,600	106,600	106,700	106,700	106,800	106,800	106,900	106,900	106,900	107,000	107,100	107,200	107,300	107,400	107,400	107,500	107,600	107,700	107,800	25
26	109,800	110,000	110,100	110,300	110,500	110,700	110,900	111,000	111,200	111,400	111,600	111,600	111,700	111,700	111,800	111,800	111,900	112,000	112,000	112,100	112,100	26
27	113,100	113,400	113,700	114,000	114,300	114,600	114,900	115,300	115,600	115,900	116,200	116,200	116,200	116,300	116,300	116,300	116,400	116,400	116,400	116,400	116,500	27
28	116,400	116,900	117,300	117,700	118,200	118,600	119,000	119,500	119,900	120,300	120,800	120,800	120,800	120,800	120,800	120,800	120,800	120,800	120,800	120,800	120,800	28

HEADWATER 812 to 816
TAILWATER 774.51 to 775.5

See special instruction for preventing gate overflow on page 2.

MAY 2008

TELLICO DAM
SPILLWAY DISCHARGE
IN CUBIC FEET PER SECOND

GATE ARRANGEMENT	HEADWATER ELEVATION																				GATE ARRANGEMENT
	816.0	816.1	816.2	816.3	816.4	816.5	816.6	816.7	816.8	816.9	817.0	817.1	817.2	817.3	817.4	817.5	817.6	817.7	817.8	817.9	818.0	
1																						1
2	7,340	7,350	7,360																			2
3	11,250	11,260	11,280	11,290	11,300	11,320	11,330	11,340	11,360	11,370	11,380											3
4	15,110	15,130	15,140	15,160	15,180	15,200	15,220	15,230	15,250	15,270	15,290	15,490	15,850	16,310	16,850	17,470	18,160	18,910				4
5	19,210	19,230	19,260	19,280	19,300	19,330	19,350	19,370	19,400	19,420	19,440	19,650	20,010	20,480	21,030	21,650	22,350	23,100	23,920	24,790	25,720	5
6	22,690	22,720	22,740	22,770	22,800	22,830	22,860	22,880	22,910	22,940	22,970	23,180	23,550	24,020	24,570	25,200	25,900	26,660	27,480	28,360	29,290	6
7	26,500	26,540	26,570	26,600	26,640	26,670	26,700	26,730	26,770	26,800	26,830	27,050	27,420	27,900	28,460	29,090	29,790	30,560	31,390	32,270	33,200	7
8	30,080	30,120	30,160	30,200	30,230	30,270	30,310	30,350	30,390	30,420	30,460	30,680	31,060	31,540	32,100	32,740	33,450	34,220	35,050	35,940	36,880	8
9	33,760	33,800	33,850	33,890	33,930	33,980	34,020	34,060	34,110	34,150	34,190	34,420	34,800	35,290	35,860	36,500	37,210	37,990	38,820	39,720	40,660	9
10	37,250	37,300	37,350	37,400	37,440	37,490	37,540	37,590	37,640	37,680	37,730	37,960	38,350	38,840	39,420	40,070	40,780	41,570	42,410	43,300	44,250	10
11	40,740	40,800	40,860	40,910	40,970	41,030	41,090	41,150	41,210	41,270	41,330	41,570	41,970	42,470	43,060	43,720	44,450	45,240	46,100	47,000	47,970	11
12	44,450	44,510	44,580	44,640	44,700	44,770	44,830	44,900	44,960	45,020	45,090	45,330	45,730	46,240	46,830	47,490	48,230	49,020	49,880	50,790	51,750	12
13	48,090	48,160	48,220	48,290	48,360	48,430	48,490	48,560	48,630	48,700	48,760	49,010	49,420	49,930	50,520	51,190	51,920	52,720	53,580	54,490	55,460	13
14	51,670	51,740	51,820	51,890	51,960	52,030	52,100	52,170	52,240	52,310	52,380	52,630	53,040	53,550	54,140	54,810	55,550	56,350	57,210	58,120	59,090	14
15	55,210	55,280	55,360	55,440	55,510	55,590	55,670	55,740	55,820	55,900	55,970	56,230	56,650	57,170	57,770	58,450	59,190	60,000	60,870	61,790	62,770	15
16	58,720	58,800	58,890	58,970	59,050	59,140	59,220	59,300	59,380	59,470	59,550	59,810	60,240	60,760	61,370	62,050	62,800	63,620	64,490	65,420	66,410	16
17	64,180	64,270	64,360	64,460	64,550	64,640	64,740	64,830	64,920	65,020	65,110	65,390	65,820	66,350	66,970	67,670	68,430	69,250	70,140	71,080	72,070	17
18	69,630	69,740	69,840	69,940	70,050	70,150	70,260	70,360	70,460	70,570	70,670	70,960	71,400	71,950	72,580	73,280	74,050	74,890	75,780	76,740	77,740	18
19	75,090	75,200	75,320	75,430	75,550	75,660	75,780	75,890	76,010	76,120	76,230	76,530	76,980	77,540	78,180	78,900	79,680	80,520	81,430	82,390	83,410	19
20	80,360	80,490	80,620	80,750	80,870	81,000	81,130	81,260	81,380	81,510	81,640	81,950	82,410	82,980	83,630	84,360	85,150	86,010	86,930	87,900	88,930	20
21	85,640	85,780	85,920	86,060	86,200	86,340	86,480	86,620	86,760	86,900	87,040	87,360	87,840	88,420	89,080	89,820	90,630	91,500	92,430	93,420	94,460	21
22	90,920	91,070	91,220	91,380	91,530	91,680	91,830	91,990	92,140	92,290	92,440	92,770	93,260	93,860	94,530	95,290	96,110	96,990	97,930	98,930	99,980	22
23	96,530	96,680	96,820	96,960	97,090	97,230	97,370	97,510	97,650	97,780	97,920	98,250	98,730	99,320	99,990	100,700	101,500	102,400	103,400	104,300	105,400	23
24	102,200	102,300	102,400	102,500	102,700	102,800	102,900	103,000	103,200	103,300	103,400	103,700	104,200	104,800	105,400	106,200	107,000	107,900	108,800	109,800	110,800	24
25	107,800	107,900	108,000	108,100	108,200	108,300	108,400	108,600	108,700	108,800	108,900	109,200	109,700	110,200	110,900	111,600	112,400	113,300	114,200	115,200	116,200	25
26	112,100	112,200	112,300	112,400	112,400	112,500	112,600	112,700	112,700	112,800	112,900	113,200	113,600	114,100	114,800	115,500	116,200	117,000	117,900	118,900	119,800	26
27	116,500	116,500	116,600	116,600	116,700	116,700	116,700	116,800	116,800	116,900	116,900	117,200	117,500	118,000	118,600	119,300	120,000	120,800	121,600	122,500	123,500	27
28	120,800	120,800	120,900	120,900	120,900	120,900	120,900	120,900	120,900	120,900	120,900	121,100	121,500	121,900	122,500	123,100	123,800	124,500	125,300	126,200	127,100	28

GATE ARRANGEMENT	HEADWATER ELEVATION																				GATE ARRANGEMENT
	818.0	818.1	818.2	818.3	818.4	818.5	818.6	818.7	818.8	818.9	819.0	819.1	819.2	819.3	819.4	819.5	819.6	819.7	819.8	819.9	820.0	
1																						1
2																						2
3																						3
4																						4
5	25,720	26,690	27,720	28,800	29,930																	5
6	29,290	30,270	31,300	32,380	33,510	34,690	35,910	37,170	38,480	39,830	41,220	42,650										6
7	33,200	34,190	35,230	36,310	37,450	38,630	39,850	41,120	42,430	43,790	45,190	46,620	48,100	49,620	51,180	52,780	54,410	56,090	57,800			7
8	36,880	37,870	38,910	40,010	41,140	42,330	43,560	44,830	46,150	47,510	48,910	50,350	51,840	53,360	54,920	56,530	58,170	59,840	61,560	63,310	65,100	8
9	40,660	41,660	42,710	43,800	44,950	46,130	47,370	48,650	49,970	51,340	52,740	54,190	55,680	57,210	58,780	60,380	62,030	63,710	65,430	67,190	68,980	9
10	44,250	45,250	46,310	47,410	48,560	49,750	50,990	52,280	53,600	54,970	56,380	57,840	59,330	60,860	62,440	64,050	65,700	67,390	69,110	70,880	72,670	10
11	47,970	48,990	50,060	51,180	52,350	53,560	54,820	56,120	57,470	58,860	60,290	61,760	63,270	64,810	66,400	68,030	69,690	71,400	73,140	74,910	76,730	11
12	51,750	52,780	53,850	54,970	56,140	57,360	58,620	59,930	61,280	62,670	64,100	65,580	67,100	68,650	70,250	71,880	73,560	75,270	77,020	78,810	80,630	12
13	55,460	56,490	57,560	58,690	59,860	61,080	62,350	63,650	65,010	66,400	67,840	69,310	70,830	72,390	73,990	75,630	77,300	79,020	80,770	82,560	84,380	13
14	59,090	60,120	61,200	62,320	63,500	64,720	65,980	67,290	68,640	70,040	71,470	72,950	74,460	76,020	77,610	79,240	80,920	82,620	84,370	86,160	87,980	14
15	62,770	63,800	64,880	66,010	67,190	68,410	69,680	70,990	72,340	73,740	75,180	76,660	78,180	79,740	81,340	82,980	84,660	86,370	88,130	89,920	91,740	15
16	66,410	67,440	68,530	69,660	70,850	72,070	73,350	74,670	76,030	77,430	78,870	80,360	81,890	83,450	85,060	86,700	88,390	90,110	91,870	93,660	95,500	16
17	72,070	73,120	74,220	75,360	76,550	77,790	79,080	80,400	81,780	83,190	84,640	86,140	87,680	89,250	90,870	92,520	94,220	95,950	97,720	99,520	101,400	17
18	77,740	78,800	79,900	81,060	82,260	83,510	84,810	86,140	87,520	88,950	90,410	91,920	93,470	95,050	96,680	98,340	100,000	101,800	103,600	105,400	107,200	18
19	83,410	84,470	85,590	86,760	87,970	89,230	90,530	91,880	93,270	94,710	96,180	97,700	99,260	100,900	102,500	104,200	105,900	107,600	109,400	111,200	113,100	19
20	88,930	90,010	91,140	92,320	93,540	94,810	96,130	97,490	98,890	100,300	101,800	103,400	104,900	106,500	108,200	109,900	111,600	113,400	115,200	117,000	118,900	20
21	94,460	95,550	96,690	97,880	99,110	100,400	101,700	103,100	104,500	106,000	107,500	109,000	110,600	112,200	113,900	115,600	117,300	119,100	120,900	122,700	124,600	21
22	99,980	101,100	102,200	103,400	104,700	106,000	107,300	108,700	110,100	111,600	113,100	114,700	116,300	117,900	119,600	121,300	123,000	124,800	126,600	128,500	130,400	22
23	105,400	106,500	107,600	108,800	110,100	111,400	112,700	114,100	115,500	117,000	118,500	120,100	121,600	123,300	124,900	126,700	128,400	130,200	132,000	133,900	135,800	23
24	110,800	111,900	113,000	114,200	115,500	116,800	118,100	119,500	120,900	122,400	123,900	125,400	127,000	128,700	130,300	132,000	133,800	135,600	137,400	139,300	141,200	24
25	116,200	117,300	118,500	119,700	120,900	122,200	123,500	124,900	126,300	127,800	129,300	130,800	132,400	134,000	135,700	137,400	139,200	141,000	142,800	144,600	146,500	25
26	119,800	121,000	122,100	123,400	124,600	125,900	127,300	128,700	130,100	131,600	133,100	134,700	136,300	138,000	139,700	141,400	143,200	145,000	146,800	148,700	150,600	26
27	123,500	124,600	125,800	127,100	128,300	129,700	131,100	132,500	133,900	135,400	137,000	138,600	140,200	141,900	143,600	145,300	147,100	149,000	150,800	152,700	154,700	27
28	127,100	128,300	129,500	130,800	132,100	133,400	134,800	136,300	137,800	139,300	140,900	142,500	144,100	145,800	147,500	149,300	151,100	153,000	154,800	156,800	158,700	28

MAY 2008

See special instruction for preventing gate overflow on page 2.

HEADWATER 816 to 820
TAILWATER 774.51 to 775.5

TELLICO DAM
SPILLWAY DISCHARGE
IN CUBIC FEET PER SECOND

HEADWATER ELEVATION

GATE ARRANGEMENT	800.0	800.1	800.2	800.3	800.4	800.5	800.6	800.7	800.8	800.9	801.0	801.1	801.2	801.3	801.4	801.5	801.6	801.7	801.8	801.9	802.0	GATE ARRANGEMENT
1	2,590	2,600	2,600	2,610	2,610	2,620	2,620	2,630	2,630	2,640	2,640	2,650	2,650	2,660	2,670	2,670	2,680	2,680	2,690	2,690	2,700	1
2	5,640	5,650	5,660	5,670	5,690	5,700	5,710	5,720	5,730	5,740	5,760	5,770	5,780	5,790	5,800	5,810	5,820	5,840	5,850	5,860	5,870	2
3	8,760	8,780	8,800	8,810	8,830	8,850	8,870	8,890	8,910	8,920	8,940	8,960	8,980	8,990	9,010	9,030	9,050	9,070	9,080	9,100	9,120	3
4	11,560	11,590	11,620	11,650	11,670	11,700	11,730	11,760	11,790	11,810	11,840	11,870	11,890	11,920	11,950	11,970	12,000	12,030	12,050	12,080	12,100	4
5	14,760	14,790	14,820	14,860	14,890	14,920	14,950	14,990	15,020	15,050	15,090	15,120	15,150	15,180	15,210	15,240	15,270	15,300	15,330	15,360	15,390	5
6	17,640	17,680	17,710	17,750	17,790	17,820	17,860	17,890	17,930	17,960	18,000	18,030	18,070	18,100	18,140	18,180	18,210	18,240	18,280	18,310	18,350	6
7	20,520	20,560	20,610	20,650	20,690	20,730	20,780	20,820	20,860	20,900	20,940	20,990	21,030	21,070	21,110	21,150	21,200	21,240	21,280	21,320	21,360	7
8	23,190	23,240	23,290	23,340	23,390	23,440	23,480	23,530	23,580	23,630	23,680	23,730	23,780	23,820	23,870	23,920	23,970	24,020	24,060	24,110	24,160	8
9	25,900	25,960	26,020	26,070	26,130	26,190	26,240	26,300	26,350	26,410	26,460	26,520	26,580	26,630	26,690	26,740	26,790	26,850	26,900	26,960	27,010	9
10	28,450	28,510	28,570	28,640	28,700	28,760	28,820	28,890	28,950	29,010	29,080	29,140	29,200	29,260	29,320	29,380	29,450	29,510	29,570	29,630	29,690	10
11	30,830	30,900	30,970	31,040	31,110	31,180	31,250	31,320	31,390	31,460	31,530	31,600	31,670	31,740	31,810	31,880	31,940	32,010	32,080	32,150	32,220	11
12	33,560	33,630	33,700	33,780	33,850	33,920	34,000	34,070	34,140	34,220	34,290	34,360	34,440	34,520	34,590	34,670	34,750	34,820	34,900	34,970	35,050	12
13	36,170	36,250	36,330	36,420	36,500	36,580	36,660	36,740	36,820	36,890	36,970	37,060	37,140	37,230	37,310	37,390	37,480	37,560	37,640	37,720	37,810	13
14	38,690	38,780	38,870	38,960	39,050	39,140	39,230	39,320	39,400	39,490	39,580	39,670	39,760	39,850	39,940	40,030	40,120	40,210	40,300	40,390	40,480	14
15	41,120	41,220	41,320	41,420	41,520	41,610	41,710	41,810	41,910	42,000	42,100	42,200	42,300	42,400	42,490	42,590	42,690	42,790	42,880	42,980	43,070	15
16	43,470	43,580	43,680	43,790	43,900	44,010	44,110	44,220	44,320	44,430	44,540	44,640	44,750	44,860	44,960	45,070	45,170	45,280	45,380	45,490	45,590	16
17	47,400	47,520	47,630	47,750	47,860	47,980	48,090	48,200	48,320	48,430	48,540	48,650	48,760	48,870	48,980	49,090	49,200	49,310	49,420	49,530	49,640	17
18	51,340	51,460	51,590	51,710	51,830	51,950	52,070	52,190	52,310	52,430	52,550	52,660	52,780	52,890	53,010	53,120	53,230	53,350	53,460	53,570	53,680	18
19	55,270	55,410	55,540	55,670	55,800	55,920	56,050	56,180	56,300	56,430	56,550	56,670	56,790	56,910	57,030	57,150	57,260	57,380	57,500	57,610	57,720	19
20	56,970	57,180	57,390	57,600	57,800	58,010	58,220	58,420	58,630	58,830	59,040	59,240	59,450	59,650	59,850	60,050	60,250	60,450	60,660	60,860	61,060	20
21	58,670	58,960	59,240	59,530	59,810	60,100	60,380	60,670	60,950	61,240	61,530	61,810	62,100	62,380	62,670	62,960	63,240	63,530	63,820	64,100	64,390	21
22	60,370	60,730	61,090	61,460	61,820	62,180	62,550	62,920	63,280	63,650	64,020	64,380	64,750	65,120	65,490	65,860	66,230	66,600	66,980	67,350	67,720	22
23	60,370	60,730	61,090	61,460	61,820	62,180	62,550	62,920	63,280	63,650	64,020	64,380	64,750	65,120	65,490	65,860	66,230	66,600	66,980	67,350	67,720	23
24	60,370	60,730	61,090	61,460	61,820	62,180	62,550	62,920	63,280	63,650	64,020	64,380	64,750	65,120	65,490	65,860	66,230	66,600	66,980	67,350	67,720	24
25	60,370	60,730	61,090	61,460	61,820	62,180	62,550	62,920	63,280	63,650	64,020	64,380	64,750	65,120	65,490	65,860	66,230	66,600	66,980	67,350	67,720	25
26	60,370	60,730	61,090	61,460	61,820	62,180	62,550	62,920	63,280	63,650	64,020	64,380	64,750	65,120	65,490	65,860	66,230	66,600	66,980	67,350	67,720	26
27	60,370	60,730	61,090	61,460	61,820	62,180	62,550	62,920	63,280	63,650	64,020	64,380	64,750	65,120	65,490	65,860	66,230	66,600	66,980	67,350	67,720	27
28	60,370	60,730	61,090	61,460	61,820	62,180	62,550	62,920	63,280	63,650	64,020	64,380	64,750	65,120	65,490	65,860	66,230	66,600	66,980	67,350	67,720	28

HEADWATER ELEVATION

GATE ARRANGEMENT	802.0	802.1	802.2	802.3	802.4	802.5	802.6	802.7	802.8	802.9	803.0	803.1	803.2	803.3	803.4	803.5	803.6	803.7	803.8	803.9	804.0	GATE ARRANGEMENT
1	2,700	2,700	2,710	2,710	2,720	2,720	2,730	2,730	2,740	2,740	2,750	2,750	2,760	2,760	2,770	2,770	2,780	2,780	2,790	2,790	2,800	1
2	5,870	5,880	5,890	5,900	5,910	5,930	5,940	5,950	5,960	5,970	5,980	5,990	6,000	6,010	6,030	6,040	6,050	6,060	6,070	6,080	6,090	2
3	9,120	9,140	9,150	9,170	9,190	9,210	9,220	9,240	9,260	9,270	9,290	9,310	9,330	9,340	9,360	9,380	9,390	9,410	9,430	9,450	9,460	3
4	12,100	12,130	12,160	12,180	12,210	12,230	12,260	12,280	12,310	12,330	12,360	12,380	12,400	12,430	12,450	12,470	12,490	12,520	12,540	12,560	12,580	4
5	15,390	15,420	15,450	15,480	15,510	15,540	15,570	15,600	15,630	15,660	15,690	15,720	15,750	15,780	15,810	15,840	15,870	15,900	15,930	15,960	15,990	5
6	18,350	18,380	18,420	18,450	18,490	18,520	18,560	18,590	18,620	18,660	18,690	18,730	18,760	18,790	18,830	18,860	18,900	18,930	18,960	19,000	19,030	6
7	21,360	21,400	21,440	21,480	21,520	21,570	21,610	21,650	21,690	21,730	21,770	21,810	21,850	21,890	21,930	21,970	22,010	22,050	22,090	22,130	22,170	7
8	24,160	24,210	24,250	24,300	24,350	24,400	24,440	24,490	24,540	24,580	24,630	24,680	24,720	24,770	24,820	24,860	24,910	24,950	25,000	25,050	25,090	8
9	27,010	27,070	27,120	27,180	27,230	27,280	27,340	27,390	27,440	27,500	27,550	27,600	27,660	27,710	27,760	27,810	27,870	27,920	27,970	28,020	28,080	9
10	29,690	29,750	29,810	29,870	29,930	29,990	30,050	30,110	30,170	30,230	30,290	30,350	30,410	30,470	30,530	30,590	30,650	30,710	30,770	30,830	30,890	10
11	32,220	32,280	32,350	32,420	32,480	32,550	32,620	32,690	32,750	32,820	32,880	32,950	33,020	33,080	33,150	33,210	33,280	33,340	33,410	33,480	33,540	11
12	35,050	35,120	35,200	35,270	35,350	35,420	35,500	35,570	35,650	35,720	35,790	35,870	35,940	36,010	36,080	36,160	36,230	36,300	36,370	36,440	36,510	12
13	37,810	37,890	37,970	38,050	38,130	38,210	38,290	38,380	38,460	38,540	38,620	38,700	38,780	38,860	38,940	39,020	39,100	39,180	39,260	39,340	39,420	13
14	40,480	40,570	40,660	40,750	40,840	40,930	41,020	41,110	41,200	41,280	41,370	41,460	41,550	41,640	41,720	41,810	41,900	41,980	42,070	42,160	42,240	14
15	43,070	43,170	43,270	43,370	43,460	43,560	43,650	43,750	43,840	43,940	44,040	44,130	44,230	44,330	44,420	44,520	44,610	44,710	44,810	44,900	45,000	15
16	45,590	45,700	45,800	45,910	46,010	46,110	46,220	46,320	46,420	46,530	46,630	46,730	46,840	46,940	47,040	47,150	47,250	47,350	47,450	47,560	47,660	16
17	49,640	49,750	49,850	49,960	50,070	50,180	50,280	50,390	50,490	50,600	50,700	50,810	50,910	51,020	51,120	51,230	51,330	51,440	51,540	51,640	51,740	17
18	53,680	53,790	53,900	54,020	54,130	54,240	54,350	54,450	54,560	54,670	54,780	54,890	54,990	55,100	55,200	55,310	55,410	55,520	55,620	55,730	55,830	18
19	57,720	57,840	57,960	58,070	58,180	58,300	58,410	58,520	58,630	58,740	58,850	58,960	59,070	59,180	59,290	59,390	59,500	59,600	59,710	59,810	59,910	19
20	61,060	61,260	61,460	61,660	61,860	62,070	62,270	62,470	62,670	62,870	63,070	63,270	63,470	63,660	63,860	64,060	64,260	64,460	64,650	64,810	64,950	20
21	64,390	64,680	64,970	65,260	65,540	65,830	66,120	66,410	66,700	66,990	67,280	67,570	67,860	68,150	68,440	68,730	69,020	69,310	69,600	69,800	69,980	21
22	67,720	68,100	68,470	68,850	69,220	69,600	69,980	70,360	70,730	71,110	71,490	71,870	72,250	72,640	73,020	73,400	73,780	74,170	74,550	74,790	75,020	22
23	67,720	68,100	68,470	68,850	69,220	69,600	69,980	70,360	70,730	71,110	71,490	71,870	72,250	72,640	73,020	73,400	73,780	74,170	74,550	74,840	75,120	23
24	67,720	68,100	68,470	68,850	69,220	69,600	69,980	70,360	70,730	71,110	71,490	71,870	72,250	72,640	73,020	73,400	73,780	74,170	74,550	74,890	75,220	24
25	67,720	68,100	68,470	68,850	69,220	69,600	69,980	70,360	70,730	71,110	71,490	71,870	72,250	72,640	73,020	73,400	73,780	74,170	74,550	74,940	75,320	25
26	67,720	68,100	68,470	68,850	69,220	69,600	69,980	70,360	70,730	71,110	71,490	71,870	72,250	72,640	73,020	73,400	73,780	74,170	74,550	74,940	75,320	26
27	67,720	68,100	68,470	68,850	69,220	69,600	69,980	70,360	70,730	71,110	71,490	71,870	72,250	72,640	73,020	73,400	73,780	74,170	74,550	74,940	75,320	27
28	67,720	68,100	68,470	68,850	69,220	69,600	69,980	70,360	70,730	71,110	71,490	71,870	72,250	72,640	73,020	73,400	73,780	74,170	74,550	74,940	75,320	28

HEADWATER 800 to 804
TAILWATER 775.51 to 776.5

MAY 2008

TELLICO DAM
SPILLWAY DISCHARGE
IN CUBIC FEET PER SECOND

HEADWATER ELEVATION

GATE ARRANGEMENT	804.0	804.1	804.2	804.3	804.4	804.5	804.6	804.7	804.8	804.9	805.0	805.1	805.2	805.3	805.4	805.5	805.6	805.7	805.8	805.9	806.0	GATE ARRANGEMENT
1	2,800	2,800	2,810	2,810	2,820	2,820	2,830	2,830	2,840	2,840	2,850	2,850	2,860	2,860	2,870	2,870	2,880	2,880	2,890	2,890	2,900	1
2	6,090	6,100	6,110	6,120	6,130	6,140	6,160	6,170	6,180	6,190	6,200	6,210	6,220	6,230	6,240	6,250	6,260	6,270	6,280	6,290	6,300	2
3	9,460	9,480	9,500	9,510	9,530	9,550	9,560	9,580	9,600	9,610	9,630	9,650	9,660	9,680	9,700	9,710	9,730	9,750	9,760	9,780	9,790	3
4	12,580	12,610	12,640	12,660	12,690	12,720	12,740	12,770	12,800	12,830	12,850	12,880	12,900	12,920	12,950	12,970	13,000	13,020	13,040	13,070	13,090	4
5	15,990	16,020	16,050	16,080	16,110	16,140	16,170	16,200	16,230	16,250	16,280	16,310	16,340	16,370	16,400	16,430	16,460	16,490	16,520	16,540	16,570	5
6	19,030	19,060	19,100	19,130	19,160	19,200	19,230	19,260	19,300	19,330	19,360	19,390	19,430	19,460	19,490	19,530	19,560	19,590	19,620	19,650	19,690	6
7	22,170	22,210	22,250	22,290	22,330	22,370	22,410	22,440	22,480	22,520	22,560	22,600	22,640	22,680	22,720	22,760	22,790	22,830	22,870	22,910	22,950	7
8	25,090	25,140	25,180	25,230	25,270	25,320	25,360	25,410	25,450	25,500	25,540	25,590	25,630	25,680	25,720	25,770	25,810	25,860	25,900	25,950	25,990	8
9	28,080	28,130	28,180	28,230	28,280	28,340	28,390	28,440	28,490	28,540	28,590	28,650	28,700	28,750	28,800	28,850	28,900	28,950	29,000	29,050	29,100	9
10	30,890	30,940	31,000	31,060	31,120	31,180	31,230	31,290	31,350	31,410	31,470	31,520	31,580	31,640	31,690	31,750	31,810	31,870	31,920	31,980	32,030	10
11	33,540	33,610	33,670	33,730	33,800	33,860	33,930	33,990	34,060	34,120	34,180	34,250	34,310	34,370	34,440	34,500	34,560	34,630	34,690	34,750	34,810	11
12	36,510	36,590	36,660	36,730	36,800	36,870	36,940	37,010	37,090	37,160	37,230	37,300	37,370	37,440	37,510	37,580	37,650	37,720	37,790	37,860	37,930	12
13	39,420	39,500	39,580	39,660	39,730	39,810	39,890	39,970	40,040	40,120	40,200	40,280	40,350	40,430	40,510	40,590	40,660	40,740	40,820	40,890	40,970	13
14	42,240	42,330	42,420	42,500	42,590	42,680	42,760	42,850	42,930	43,020	43,110	43,190	43,280	43,360	43,450	43,530	43,620	43,700	43,780	43,870	43,950	14
15	45,000	45,090	45,180	45,280	45,370	45,460	45,560	45,650	45,740	45,830	45,930	46,020	46,110	46,200	46,300	46,390	46,480	46,570	46,660	46,760	46,850	15
16	47,660	47,760	47,860	47,970	48,070	48,170	48,270	48,380	48,480	48,580	48,680	48,780	48,880	48,980	49,080	49,180	49,280	49,380	49,480	49,580	49,680	16
17	51,740	51,850	51,960	52,070	52,180	52,290	52,400	52,500	52,610	52,720	52,820	52,940	53,050	53,160	53,270	53,380	53,490	53,600	53,710	53,820	53,930	17
18	55,830	55,940	56,060	56,170	56,290	56,400	56,520	56,630	56,740	56,860	56,970	57,090	57,210	57,340	57,460	57,580	57,700	57,820	57,940	58,060	58,180	18
19	59,910	60,040	60,160	60,280	60,400	60,520	60,640	60,760	60,880	61,000	61,110	61,250	61,380	61,510	61,650	61,780	61,910	62,040	62,170	62,300	62,430	19
20	64,950	65,100	65,260	65,410	65,570	65,720	65,870	66,020	66,170	66,330	66,480	66,640	66,800	66,960	67,110	67,270	67,430	67,590	67,750	67,900	68,060	20
21	69,980	70,170	70,360	70,550	70,730	70,920	71,100	71,290	71,470	71,660	71,840	72,030	72,210	72,400	72,580	72,770	72,950	73,140	73,320	73,500	73,690	21
22	75,020	75,240	75,460	75,680	75,900	76,120	76,340	76,550	76,770	76,990	77,200	77,410	77,630	77,840	78,050	78,260	78,470	78,690	78,890	79,100	79,310	22
23	75,120	75,390	75,670	75,950	76,220	76,500	76,770	77,050	77,320	77,590	77,870	78,140	78,410	78,690	78,960	79,230	79,500	79,780	80,050	80,320	80,590	23
24	75,220	75,550	75,880	76,210	76,550	76,880	77,210	77,540	77,870	78,200	78,540	78,870	79,200	79,530	79,870	80,200	80,530	80,870	81,200	81,530	81,870	24
25	75,320	75,710	76,090	76,480	76,870	77,260	77,640	78,030	78,420	78,810	79,200	79,600	79,990	80,380	80,770	81,170	81,560	81,960	82,350	82,750	83,140	25
26	75,320	75,710	76,090	76,480	76,870	77,260	77,640	78,030	78,420	78,810	79,200	79,600	79,990	80,380	80,770	81,170	81,560	81,960	82,350	82,750	83,140	26
27	75,320	75,710	76,090	76,480	76,870	77,260	77,640	78,030	78,420	78,810	79,200	79,600	79,990	80,380	80,770	81,170	81,560	81,960	82,350	82,750	83,140	27
28	75,320	75,710	76,090	76,480	76,870	77,260	77,640	78,030	78,420	78,810	79,200	79,600	79,990	80,380	80,770	81,170	81,560	81,960	82,350	82,750	83,140	28

HEADWATER ELEVATION

GATE ARRANGEMENT	806.0	806.1	806.2	806.3	806.4	806.5	806.6	806.7	806.8	806.9	807.0	807.1	807.2	807.3	807.4	807.5	807.6	807.7	807.8	807.9	808.0	GATE ARRANGEMENT
1	2,900	2,900	2,910	2,910	2,920	2,920	2,930	2,930	2,940	2,940	2,940	2,950	2,950	2,960	2,960	2,970	2,970	2,980	2,980	2,990	2,990	1
2	6,300	6,310	6,330	6,340	6,350	6,360	6,370	6,380	6,390	6,400	6,410	6,420	6,430	6,440	6,450	6,460	6,470	6,480	6,490	6,500	6,510	2
3	9,790	9,810	9,830	9,840	9,860	9,880	9,890	9,910	9,920	9,940	9,960	9,970	9,990	10,000	10,020	10,040	10,050	10,070	10,080	10,100	10,120	3
4	13,090	13,120	13,140	13,160	13,190	13,210	13,230	13,260	13,280	13,310	13,330	13,350	13,370	13,400	13,420	13,440	13,460	13,490	13,510	13,530	13,550	4
5	16,570	16,600	16,630	16,670	16,700	16,730	16,760	16,790	16,820	16,850	16,880	16,910	16,930	16,960	16,980	17,010	17,040	17,060	17,090	17,120	17,140	5
6	19,690	19,720	19,750	19,780	19,820	19,850	19,880	19,910	19,940	19,980	20,010	20,040	20,070	20,100	20,130	20,170	20,200	20,230	20,260	20,290	20,320	6
7	22,950	22,990	23,020	23,060	23,100	23,140	23,180	23,210	23,250	23,290	23,330	23,370	23,400	23,440	23,480	23,520	23,550	23,590	23,630	23,660	23,700	7
8	25,990	26,030	26,080	26,120	26,170	26,210	26,250	26,300	26,340	26,380	26,430	26,470	26,510	26,560	26,600	26,640	26,690	26,730	26,770	26,820	26,860	8
9	29,100	29,150	29,200	29,250	29,300	29,350	29,400	29,450	29,500	29,550	29,600	29,650	29,700	29,750	29,800	29,850	29,900	29,950	29,990	30,040	30,090	9
10	32,030	32,090	32,150	32,200	32,260	32,320	32,370	32,430	32,480	32,540	32,590	32,650	32,710	32,760	32,820	32,870	32,930	32,980	33,040	33,090	33,140	10
11	34,810	34,880	34,940	35,000	35,060	35,120	35,190	35,250	35,310	35,370	35,430	35,490	35,560	35,620	35,680	35,740	35,800	35,860	35,920	35,980	36,040	11
12	37,930	38,000	38,070	38,140	38,210	38,270	38,340	38,410	38,480	38,550	38,620	38,680	38,750	38,820	38,890	38,960	39,020	39,090	39,160	39,230	39,290	12
13	40,970	41,050	41,120	41,200	41,280	41,350	41,430	41,500	41,580	41,650	41,730	41,800	41,880	41,950	42,030	42,100	42,180	42,250	42,330	42,400	42,470	13
14	43,950	44,040	44,120	44,200	44,290	44,370	44,450	44,530	44,620	44,700	44,780	44,860	44,950	45,030	45,110	45,190	45,270	45,350	45,430	45,520	45,600	14
15	46,850	46,940	47,030	47,120	47,210	47,300	47,390	47,480	47,570	47,660	47,750	47,840	47,930	48,020	48,110	48,200	48,280	48,370	48,460	48,550	48,640	15
16	49,680	49,780	49,880	49,970	50,070	50,170	50,270	50,370	50,460	50,560	50,660	50,750	50,850	50,950	51,040	51,140	51,230	51,330	51,430	51,520	51,620	16
17	53,930	54,040	54,150	54,270	54,380	54,490	54,600	54,710	54,820	54,930	55,040	55,150	55,260	55,370	55,480	55,590	55,700	55,810	55,910	56,020	56,130	17
18	58,180	58,310	58,430	58,560	58,680	58,800	58,930	59,050	59,180	59,300	59,420	59,540	59,670	59,790	59,910	60,040	60,160	60,280	60,400	60,520	60,640	18
19	62,430	62,570	62,710	62,850	62,990	63,120	63,260	63,400	63,530	63,670	63,800	63,940	64,080	64,210	64,350	64,480	64,620	64,760	64,890	65,020	65,160	19
20	68,060	68,190	68,320	68,450	68,570	68,700	68,830	68,950	69,080	69,200	69,330	69,450	69,570	69,690	69,810	69,930	70,050	70,170	70,290	70,410	70,530	20
21	73,690	73,810	73,920	74,040	74,160	74,280	74,390	74,510	74,620	74,740	74,850	74,960	75,060	75,170	75,280	75,380	75,490	75,590	75,690	75,790	75,900	21
22	79,310	79,420	79,530	79,640	79,750	79,860	79,960	80,070	80,170	80,270	80,370	80,470	80,560	80,650	80,740	80,830	80,920	81,010	81,090	81,180	81,260	22
23	80,590	80,790	81,000	81,210	81,410	81,610	81,820	82,020	82,220	82,420	82,630	82,820	83,020	83,210	83,410	83,600	83,800	83,990	84,180	84,370	84,570	23
24	81,870	82,170	82,470	82,770	83,070	83,370	83,670	83,970	84,280	84,580	84,880	85,180	85,480	85,780	86,070	86,370	86,670	86,970	87,270	87,570	87,870	24
25	83,140	83,540	83,940	84,330	84,730	85,130	85,530	85,930	86,330	86,730	87,130	87,530	87,940	88,340	88,740	89,140	89,550	89,950	90,360	90,760	91,170	25
26	83,140	83,540	83,940	84,330	84,730	85,130	85,530	85,930	86,330	86,730	87,130	87,530	87,940	88,340	88,740	89,140	89,550	89,950	90,360	90,760	91,170	26
27	83,140	83,540	83,940	84,330	84,730	85,130	85,530	85,930	86,330	86,730	87,130	87,530	87,940	88,340	88,740	89,140	89,550	89,950	90,360	90,760	91,170	27
28	83,140	83,540	83,940	84,330	84,730	85,130	85,530	85,930	86,330	86,730	87,130	87,530	87,940	88,340	88,740	89,140	89,550	89,950	90,360	90,760	91,170	28

MAY 2008

HEADWATER 804 to 808
TAILWATER 775.51 to 776.5

TELLICO DAM
SPILLWAY DISCHARGE
IN CUBIC FEET PER SECOND

HEADWATER ELEVATION

GATE ARRANGEMENT	808.0	808.1	808.2	808.3	808.4	808.5	808.6	808.7	808.8	808.9	809.0	809.1	809.2	809.3	809.4	809.5	809.6	809.7	809.8	809.9	810.0	GATE ARRANGEMENT
1	2,990	3,000	3,000	3,010	3,010	3,010	3,020	3,020	3,030	3,030	3,040	3,040	3,050	3,050	3,060	3,060	3,070	3,070	3,070	3,080	3,080	1
2	6,510	6,520	6,530	6,540	6,550	6,560	6,570	6,580	6,590	6,600	6,610	6,620	6,630	6,640	6,650	6,660	6,670	6,680	6,690	6,700	6,710	2
3	10,120	10,130	10,150	10,160	10,180	10,190	10,210	10,230	10,240	10,260	10,270	10,290	10,300	10,320	10,330	10,350	10,370	10,380	10,400	10,410	10,430	3
4	13,550	13,580	13,600	13,620	13,640	13,660	13,690	13,710	13,730	13,750	13,770	13,790	13,810	13,830	13,850	13,870	13,890	13,910	13,930	13,950	13,970	4
5	17,140	17,170	17,200	17,230	17,250	17,280	17,310	17,340	17,360	17,390	17,420	17,450	17,470	17,500	17,520	17,550	17,570	17,600	17,620	17,650	17,670	5
6	20,320	20,350	20,390	20,420	20,450	20,480	20,510	20,540	20,570	20,600	20,630	20,660	20,700	20,730	20,760	20,790	20,820	20,850	20,880	20,910	20,940	6
7	23,700	23,740	23,780	23,810	23,850	23,890	23,920	23,960	24,000	24,030	24,070	24,110	24,140	24,180	24,220	24,250	24,290	24,320	24,360	24,400	24,430	7
8	26,860	26,900	26,940	26,990	27,030	27,070	27,110	27,160	27,200	27,240	27,280	27,320	27,370	27,410	27,450	27,490	27,530	27,580	27,620	27,660	27,700	8
9	30,090	30,140	30,190	30,240	30,290	30,330	30,380	30,430	30,480	30,530	30,570	30,620	30,670	30,720	30,770	30,810	30,860	30,910	30,960	31,000	31,050	9
10	33,140	33,200	33,250	33,310	33,360	33,420	33,470	33,520	33,580	33,630	33,690	33,740	33,790	33,850	33,900	33,950	34,010	34,060	34,110	34,160	34,220	10
11	36,040	36,100	36,160	36,220	36,280	36,340	36,400	36,460	36,520	36,580	36,640	36,700	36,760	36,820	36,880	36,940	37,000	37,060	37,120	37,180	37,240	11
12	39,290	39,360	39,430	39,490	39,560	39,630	39,690	39,760	39,820	39,890	39,960	40,020	40,090	40,150	40,220	40,280	40,350	40,410	40,480	40,540	40,610	12
13	42,470	42,550	42,620	42,690	42,770	42,840	42,910	42,990	43,060	43,130	43,200	43,280	43,350	43,420	43,490	43,570	43,640	43,710	43,780	43,850	43,920	13
14	45,600	45,680	45,760	45,840	45,920	46,000	46,080	46,160	46,240	46,320	46,400	46,480	46,550	46,630	46,710	46,790	46,870	46,950	47,030	47,100	47,180	14
15	48,640	48,720	48,810	48,900	48,990	49,070	49,160	49,250	49,330	49,420	49,510	49,590	49,680	49,760	49,850	49,940	50,020	50,110	50,190	50,280	50,360	15
16	51,620	51,710	51,810	51,900	52,000	52,090	52,180	52,280	52,370	52,460	52,560	52,650	52,740	52,840	52,930	53,020	53,110	53,210	53,300	53,390	53,480	16
17	56,130	56,240	56,350	56,450	56,560	56,670	56,770	56,880	56,990	57,090	57,200	57,310	57,410	57,520	57,620	57,730	57,830	57,940	58,040	58,150	58,250	17
18	60,640	60,770	60,890	61,010	61,130	61,250	61,370	61,490	61,600	61,720	61,840	61,960	62,080	62,200	62,310	62,430	62,550	62,670	62,780	62,900	63,020	18
19	65,160	65,290	65,430	65,560	65,690	65,830	65,960	66,090	66,220	66,350	66,480	66,620	66,750	66,880	67,010	67,140	67,270	67,400	67,530	67,650	67,780	19
20	70,530	70,650	70,760	70,880	71,000	71,110	71,230	71,350	71,460	71,570	71,690	71,800	71,910	72,020	72,130	72,240	72,340	72,450	72,560	72,670	72,770	20
21	75,900	76,000	76,100	76,200	76,300	76,400	76,500	76,600	76,700	76,800	76,890	76,980	77,070	77,160	77,250	77,340	77,420	77,510	77,590	77,680	77,760	21
22	81,260	81,350	81,440	81,520	81,610	81,690	81,780	81,860	81,940	82,020	82,100	82,170	82,230	82,300	82,370	82,430	82,500	82,560	82,630	82,690	82,750	22
23	84,570	84,760	84,950	85,150	85,340	85,530	85,720	85,910	86,100	86,290	86,480	86,670	86,850	87,030	87,210	87,400	87,580	87,760	87,940	88,120	88,300	23
24	87,870	88,170	88,470	88,770	89,070	89,370	89,670	89,970	90,270	90,570	90,870	91,170	91,470	91,760	92,060	92,360	92,660	92,950	93,250	93,550	93,850	24
25	91,170	91,580	91,980	92,390	92,800	93,210	93,620	94,030	94,440	94,850	95,260	95,670	96,080	96,490	96,910	97,320	97,730	98,150	98,560	98,980	99,390	25
26	91,170	91,580	91,980	92,390	92,800	93,210	93,620	94,030	94,440	94,850	95,260	95,670	96,080	96,490	96,910	97,320	97,730	98,150	98,560	98,980	99,390	26
27	91,170	91,580	91,980	92,390	92,800	93,210	93,620	94,030	94,440	94,850	95,260	95,670	96,080	96,490	96,910	97,320	97,730	98,150	98,560	98,980	99,390	27
28	91,170	91,580	91,980	92,390	92,800	93,210	93,620	94,030	94,440	94,850	95,260	95,670	96,080	96,490	96,910	97,320	97,730	98,150	98,560	98,980	99,390	28

HEADWATER ELEVATION

GATE ARRANGEMENT	810.0	810.1	810.2	810.3	810.4	810.5	810.6	810.7	810.8	810.9	811.0	811.1	811.2	811.3	811.4	811.5	811.6	811.7	811.8	811.9	812.0	GATE ARRANGEMENT
1	3,080	3,090	3,090	3,100	3,100	3,110	3,110	3,120	3,120	3,120	3,130	3,130	3,140	3,140	3,150	3,150	3,160	3,160	3,160	3,170	3,170	1
2	6,710	6,720	6,730	6,740	6,750	6,760	6,770	6,780	6,790	6,800	6,810	6,820	6,830	6,840	6,850	6,860	6,870	6,880	6,890	6,900	6,910	2
3	10,430	10,440	10,460	10,470	10,490	10,500	10,520	10,530	10,550	10,560	10,580	10,590	10,610	10,620	10,640	10,650	10,670	10,680	10,700	10,710	10,730	3
4	13,970	13,990	14,010	14,030	14,050	14,070	14,090	14,110	14,130	14,150	14,170	14,190	14,210	14,230	14,250	14,260	14,280	14,300	14,320	14,340	14,360	4
5	17,670	17,700	17,730	17,750	17,780	17,800	17,830	17,850	17,880	17,900	17,930	17,950	17,980	18,000	18,030	18,050	18,070	18,100	18,120	18,150	18,170	5
6	20,940	20,970	21,000	21,030	21,060	21,090	21,120	21,150	21,180	21,210	21,240	21,270	21,300	21,330	21,360	21,390	21,420	21,450	21,480	21,510	21,540	6
7	24,430	24,470	24,500	24,540	24,580	24,610	24,650	24,680	24,720	24,750	24,790	24,820	24,860	24,900	24,930	24,970	25,000	25,040	25,070	25,110	25,140	7
8	27,700	27,740	27,780	27,820	27,870	27,910	27,950	27,990	28,030	28,070	28,110	28,150	28,190	28,230	28,270	28,310	28,350	28,400	28,440	28,480	28,520	8
9	31,050	31,100	31,140	31,190	31,240	31,280	31,330	31,380	31,420	31,470	31,520	31,560	31,610	31,660	31,700	31,750	31,800	31,840	31,890	31,930	31,980	9
10	34,220	34,270	34,320	34,380	34,430	34,480	34,530	34,590	34,640	34,690	34,740	34,790	34,850	34,900	34,950	35,000	35,050	35,100	35,160	35,210	35,260	10
11	37,240	37,300	37,360	37,420	37,480	37,540	37,600	37,660	37,720	37,780	37,840	37,900	37,960	38,020	38,080	38,140	38,200	38,260	38,310	38,370	38,430	11
12	40,610	40,680	40,740	40,810	40,880	40,940	41,010	41,080	41,140	41,210	41,270	41,340	41,410	41,470	41,540	41,600	41,670	41,740	41,800	41,870	41,930	12
13	43,920	44,000	44,070	44,140	44,210	44,280	44,360	44,430	44,500	44,570	44,640	44,710	44,790	44,860	44,930	45,000	45,070	45,140	45,210	45,280	45,350	13
14	47,180	47,260	47,340	47,420	47,490	47,570	47,650	47,720	47,800	47,880	47,960	48,030	48,110	48,180	48,260	48,340	48,410	48,490	48,560	48,640	48,720	14
15	50,360	50,450	50,530	50,610	50,700	50,780	50,870	50,950	51,030	51,120	51,200	51,280	51,370	51,450	51,530	51,620	51,700	51,780	51,860	51,940	52,030	15
16	53,480	53,570	53,670	53,760	53,850	53,940	54,030	54,120	54,210	54,300	54,390	54,480	54,570	54,660	54,750	54,840	54,930	55,020	55,110	55,200	55,280	16
17	58,250	58,350	58,460	58,560	58,660	58,770	58,870	58,970	59,080	59,180	59,280	59,380	59,480	59,590	59,690	59,790	59,890	59,990	60,090	60,190	60,290	17
18	63,020	63,130	63,250	63,360	63,480	63,600	63,710	63,830	63,940	64,050	64,170	64,280	64,400	64,510	64,620	64,740	64,850	64,960	65,070	65,190	65,300	18
19	67,780	67,910	68,040	68,170	68,300	68,420	68,550	68,680	68,800	68,930	69,060	69,180	69,310	69,430	69,560	69,680	69,810	69,930	70,060	70,180	70,310	19
20	72,770	72,880	72,990	73,100	73,220	73,320	73,430	73,540	73,650	73,760	73,870	73,990	74,120	74,250	74,370	74,500	74,630	74,750	74,880	75,000	75,130	20
21	77,760	77,850	77,950	78,040	78,130	78,230	78,320	78,410	78,500	78,590	78,680	78,810	78,930	79,060	79,190	79,320	79,440	79,570	79,700	79,820	79,950	21
22	82,750	82,830	82,900	82,980	83,050	83,130	83,200	83,270	83,350	83,420	83,490	83,620	83,750	83,880	84,000	84,130	84,260	84,390	84,510	84,640	84,770	22
23	88,300	88,490	88,680	88,870	89,060	89,240	89,430	89,620	89,810	90,000	90,180	90,410	90,640	90,820	90,980	91,150	91,320	91,480	91,650	91,810	91,970	23
24	93,850	94,150	94,450	94,760	95,060	95,360	95,670	95,970	96,270	96,580	96,880	97,200	97,530	97,760	97,960	98,170	98,370	98,580	98,780	98,980	99,180	24
25	99,390	99,810	100,200	100,600	101,100	101,500	101,900	102,300	102,700	103,200	103,600	104,000	104,400	104,700	104,900	105,200	105,400	105,700	105,900	106,100	106,400	25
26	99,390	99,810	100,200	100,600	101,100	101,500	101,900	102,300	102,700	103,200	103,600	104,000	104,400	104,700	105,000	105,400	105,700	106,000	106,300	106,600	106,900	26
27	99,390	99,810	100,200	100,600	101,100	101,500	101,900	102,300	102,700	103,200	103,600	104,000	104,400	104,800	105,200	105,500	105,900	106,200	106,600	107,000	107,300	27
28	99,390	99,810	100,200	100,600	101,100	101,500	101,900	102,300	102,700	103,200	103,600	104,000	104,400	104,800	105,300	105,700	106,100	106,500	107,000	107,400	107,800	28

HEADWATER 808 to 812
TAILWATER 775.51 to 776.5

MAY 2008

TELLICO DAM

SPILLWAY DISCHARGE

IN CUBIC FEET PER SECOND

HEADWATER ELEVATION

GATE ARRANGEMENT	812.0	812.1	812.2	812.3	812.4	812.5	812.6	812.7	812.8	812.9	813.0	813.1	813.2	813.3	813.4	813.5	813.6	813.7	813.8	813.9	814.0	GATE ARRANGEMENT
1	3,170	3,180	3,180	3,190	3,190	3,200	3,200	3,200	3,210	3,210	3,220	3,220	3,230	3,230	3,230	3,240	3,240	3,250	3,250	3,260	3,260	1
2	6,910	6,920	6,930	6,930	6,940	6,950	6,960	6,970	6,980	6,990	7,000	7,010	7,020	7,030	7,040	7,050	7,060	7,070	7,080	7,090	7,100	2
3	10,730	10,740	10,760	10,770	10,790	10,800	10,820	10,830	10,850	10,860	10,880	10,890	10,910	10,920	10,940	10,950	10,970	10,980	10,990	11,010	11,020	3
4	14,360	14,380	14,400	14,420	14,440	14,460	14,470	14,490	14,510	14,530	14,550	14,570	14,590	14,610	14,630	14,640	14,660	14,680	14,700	14,720	14,740	4
5	18,170	18,200	18,220	18,250	18,270	18,300	18,320	18,340	18,370	18,390	18,420	18,440	18,470	18,500	18,520	18,550	18,580	18,600	18,630	18,650	18,680	5
6	21,540	21,570	21,600	21,630	21,660	21,690	21,720	21,740	21,770	21,800	21,830	21,860	21,890	21,920	21,950	21,980	22,010	22,030	22,060	22,090	22,120	6
7	25,140	25,180	25,210	25,250	25,280	25,320	25,350	25,390	25,420	25,450	25,490	25,520	25,560	25,590	25,630	25,660	25,690	25,730	25,760	25,800	25,830	7
8	28,520	28,560	28,600	28,640	28,680	28,720	28,760	28,800	28,840	28,880	28,920	28,960	28,990	29,030	29,070	29,110	29,150	29,190	29,230	29,270	29,310	8
9	31,980	32,020	32,070	32,120	32,160	32,210	32,250	32,300	32,340	32,390	32,430	32,480	32,520	32,570	32,610	32,660	32,700	32,750	32,790	32,840	32,880	9
10	35,260	35,310	35,360	35,410	35,460	35,510	35,560	35,610	35,670	35,720	35,770	35,820	35,870	35,920	35,970	36,020	36,070	36,120	36,170	36,220	36,270	10
11	38,430	38,490	38,550	38,610	38,670	38,720	38,780	38,840	38,900	38,950	39,010	39,070	39,130	39,180	39,240	39,300	39,360	39,410	39,470	39,530	39,580	11
12	41,930	41,990	42,060	42,120	42,180	42,240	42,310	42,370	42,430	42,490	42,550	42,620	42,680	42,750	42,810	42,880	42,940	43,000	43,070	43,130	43,190	12
13	45,350	45,420	45,490	45,560	45,630	45,700	45,760	45,830	45,900	45,970	46,040	46,100	46,170	46,230	46,300	46,360	46,430	46,490	46,560	46,620	46,690	13
14	48,720	48,790	48,870	48,940	49,020	49,090	49,170	49,240	49,320	49,390	49,460	49,540	49,610	49,690	49,760	49,830	49,910	49,980	50,060	50,130	50,200	14
15	52,030	52,110	52,190	52,270	52,350	52,430	52,520	52,600	52,680	52,760	52,840	52,920	53,000	53,080	53,160	53,240	53,320	53,400	53,480	53,560	53,640	15
16	55,280	55,370	55,460	55,550	55,640	55,730	55,810	55,900	55,990	56,080	56,160	56,250	56,340	56,420	56,510	56,600	56,680	56,770	56,860	56,940	57,030	16
17	60,290	60,390	60,490	60,590	60,690	60,790	60,890	60,990	61,090	61,190	61,290	61,390	61,480	61,580	61,680	61,780	61,880	61,970	62,070	62,170	62,260	17
18	65,300	65,410	65,520	65,630	65,750	65,860	65,970	66,080	66,190	66,300	66,410	66,520	66,630	66,740	66,850	66,960	67,070	67,180	67,280	67,390	67,500	18
19	70,310	70,430	70,550	70,680	70,800	70,920	71,040	71,170	71,290	71,410	71,530	71,650	71,770	71,900	72,020	72,140	72,260	72,380	72,500	72,620	72,740	19
20	75,130	75,260	75,390	75,520	75,650	75,780	75,910	76,040	76,170	76,290	76,420	76,560	76,690	76,820	76,960	77,090	77,220	77,360	77,490	77,620	77,750	20
21	79,950	80,080	80,220	80,360	80,500	80,630	80,770	80,910	81,040	81,180	81,310	81,460	81,610	81,750	81,900	82,050	82,190	82,340	82,480	82,630	82,770	21
22	84,770	84,910	85,060	85,200	85,350	85,490	85,630	85,780	85,920	86,060	86,200	86,360	86,520	86,680	86,840	87,000	87,160	87,320	87,470	87,630	87,790	22
23	91,970	92,070	92,170	92,270	92,360	92,460	92,550	92,650	92,740	92,830	92,920	93,030	93,150	93,260	93,370	93,480	93,590	93,690	93,800	93,910	94,020	23
24	99,180	99,230	99,280	99,330	99,380	99,430	99,470	99,520	99,560	99,600	99,640	99,700	99,770	99,830	99,890	99,950	100,000	100,100	100,100	100,200	100,200	24
25	106,400	106,400	106,400	106,400	106,400	106,400	106,400	106,400	106,400	106,400	106,400	106,400	106,400	106,400	106,400	106,400	106,400	106,400	106,500	106,500	106,500	25
26	106,900	107,000	107,100	107,300	107,400	107,600	107,700	107,900	108,000	108,100	108,300	108,400	108,600	108,700	108,900	109,000	109,200	109,300	109,500	109,600	109,800	26
27	107,300	107,600	107,900	108,200	108,500	108,800	109,000	109,300	109,600	109,900	110,200	110,500	110,800	111,000	111,300	111,600	111,900	112,200	112,500	112,800	113,100	27
28	107,800	108,200	108,700	109,100	109,500	109,900	110,400	110,800	111,200	111,600	112,100	112,500	112,900	113,400	113,800	114,200	114,700	115,100	115,500	116,000	116,400	28

HEADWATER ELEVATION

GATE ARRANGEMENT	814.0	814.1	814.2	814.3	814.4	814.5	814.6	814.7	814.8	814.9	815.0	815.1	815.2	815.3	815.4	815.5	815.6	815.7	815.8	815.9	816.0	GATE ARRANGEMENT
1	3,260	3,260	3,270	3,270	3,280	3,280	3,290	3,290	3,290	3,300	3,300	3,310	3,310	3,320	3,320	3,320						1
2	7,100	7,100	7,110	7,120	7,130	7,140	7,150	7,160	7,170	7,180	7,190	7,200	7,210	7,220	7,220	7,230	7,240	7,250	7,260	7,270	7,280	2
3	11,020	11,040	11,050	11,070	11,080	11,100	11,110	11,120	11,140	11,150	11,170	11,180	11,200	11,210	11,220	11,240	11,250	11,270	11,280	11,300	11,310	3
4	14,740	14,760	14,780	14,790	14,810	14,830	14,850	14,870	14,890	14,910	14,920	14,940	14,960	14,980	15,000	15,020	15,030	15,050	15,070	15,090	15,110	4
5	18,680	18,710	18,740	18,760	18,790	18,820	18,850	18,880	18,900	18,930	18,960	18,980	19,010	19,030	19,060	19,080	19,110	19,130	19,160	19,180	19,210	5
6	22,120	22,150	22,180	22,210	22,240	22,260	22,290	22,320	22,350	22,380	22,410	22,440	22,460	22,490	22,520	22,550	22,580	22,600	22,630	22,660	22,690	6
7	25,830	25,870	25,900	25,930	25,970	26,000	26,030	26,070	26,100	26,140	26,170	26,200	26,240	26,270	26,300	26,340	26,370	26,400	26,440	26,470	26,500	7
8	29,310	29,350	29,390	29,430	29,470	29,500	29,540	29,580	29,620	29,660	29,700	29,740	29,780	29,810	29,850	29,890	29,930	29,970	30,010	30,040	30,080	8
9	32,880	32,930	32,970	33,010	33,060	33,100	33,150	33,190	33,240	33,280	33,320	33,370	33,410	33,460	33,500	33,540	33,590	33,630	33,670	33,720	33,760	9
10	36,270	36,320	36,370	36,420	36,470	36,520	36,570	36,620	36,660	36,710	36,760	36,810	36,860	36,910	36,960	37,010	37,060	37,110	37,150	37,200	37,250	10
11	39,580	39,640	39,700	39,750	39,810	39,870	39,930	39,980	40,040	40,100	40,150	40,210	40,270	40,330	40,390	40,450	40,500	40,560	40,620	40,680	40,740	11
12	43,190	43,260	43,320	43,380	43,440	43,500	43,570	43,630	43,690	43,750	43,810	43,880	43,940	44,000	44,070	44,130	44,190	44,260	44,320	44,380	44,450	12
13	46,690	46,750	46,820	46,890	46,950	47,020	47,090	47,150	47,220	47,290	47,350	47,430	47,500	47,570	47,650	47,720	47,790	47,870	47,940	48,010	48,090	13
14	50,200	50,280	50,350	50,430	50,510	50,580	50,660	50,730	50,810	50,880	50,960	51,030	51,100	51,170	51,240	51,320	51,390	51,460	51,530	51,600	51,670	14
15	53,640	53,720	53,800	53,880	53,960	54,040	54,110	54,190	54,270	54,350	54,430	54,510	54,590	54,660	54,740	54,820	54,900	54,970	55,050	55,130	55,210	15
16	57,030	57,110	57,200	57,290	57,370	57,460	57,540	57,630	57,710	57,800	57,880	57,970	58,050	58,130	58,220	58,300	58,390	58,470	58,550	58,640	58,720	16
17	62,260	62,360	62,460	62,560	62,650	62,750	62,840	62,940	63,040	63,130	63,230	63,320	63,420	63,510	63,610	63,700	63,800	63,890	63,990	64,080	64,180	17
18	67,500	67,610	67,720	67,820	67,930	68,040	68,150	68,250	68,360	68,470	68,570	68,680	68,790	68,890	69,000	69,100	69,210	69,320	69,420	69,530	69,630	18
19	72,740	72,860	72,980	73,090	73,210	73,330	73,450	73,570	73,690	73,800	73,920	74,040	74,160	74,270	74,390	74,510	74,620	74,740	74,860	74,970	75,090	19
20	77,750	77,890	78,020	78,150	78,280	78,420	78,550	78,680	78,810	78,940	79,070	79,200	79,330	79,460	79,590	79,720	79,850	79,980	80,110	80,240	80,360	20
21	82,770	82,920	83,060	83,210	83,350	83,500	83,640	83,790	83,930	84,080	84,220	84,360	84,510	84,650	84,790	84,930	85,070	85,220	85,360	85,500	85,640	21
22	87,790	87,950	88,110	88,270	88,420	88,580	88,740	88,900	89,050	89,210	89,370	89,520	89,680	89,840	89,990	90,150	90,300	90,460	90,610	90,760	90,920	22
23	94,020	94,140	94,260	94,380	94,510	94,630	94,750	94,870	94,990	95,110	95,220	95,360	95,490	95,620	95,750	95,890	96,020	96,150	96,280	96,410	96,530	23
24	100,200	100,300	100,400	100,500	100,600	100,700	100,800	100,800	100,900	101,000	101,100	101,200	101,300	101,400	101,500	101,600	101,700	101,800	101,900	102,000	102,200	24
25	106,500	106,500	106,600	106,600	106,700	106,700	106,800	106,800	106,900	106,900	107,000	107,100	107,200	107,300	107,400	107,400	107,400	107,500	107,600	107,700	107,800	25
26	109,800	110,000	110,100	110,300	110,500	110,700	110,800	111,000	111,200	111,400	111,600	111,600	111,700	111,700	111,800	111,800	111,900	112,000	112,000	112,100	112,100	26
27	113,100	113,400	113,700	114,000	114,300	114,600	114,900	115,200	115,500	115,800	116,200	116,200	116,200	116,300	116,300	116,300	116,400	116,400	116,400	116,400	116,500	27
28	116,400	116,800	117,300	117,700	118,100	118,600	119,000	119,500	119,900	120,300	120,800	120,800	120,800	120,800	120,800	120,800	120,800	120,800	120,800	120,800	120,800	28

MAY 2008

See special instruction for preventing gate overflow on page 2.

HEADWATER 812 to 816
TAILWATER 775.51 to 776.5

TELLICO DAM
SPILLWAY DISCHARGE
IN CUBIC FEET PER SECOND

GATE ARRANGEMENT	HEADWATER ELEVATION																				GATE ARRANGEMENT
	816.0	816.1	816.2	816.3	816.4	816.5	816.6	816.7	816.8	816.9	817.0	817.1	817.2	817.3	817.4	817.5	817.6	817.7	817.8	817.9	818.0	
1																						1
2	7,280	7,290	7,300																			2
3	11,310	11,320	11,340	11,350	11,370	11,380	11,390	11,410	11,420	11,440	11,450											3
4	15,110	15,130	15,140	15,160	15,180	15,200	15,220	15,230	15,250	15,270	15,290	15,490	15,850	16,310	16,850	17,470	18,160	18,910				4
5	19,210	19,230	19,260	19,280	19,300	19,330	19,350	19,370	19,400	19,420	19,440	19,650	20,010	20,480	21,030	21,650	22,350	23,100	23,920	24,790	25,720	5
6	22,690	22,720	22,740	22,770	22,800	22,830	22,860	22,880	22,910	22,940	22,970	23,180	23,550	24,020	24,570	25,200	25,900	26,660	27,480	28,360	29,290	6
7	26,500	26,540	26,570	26,600	26,640	26,670	26,700	26,730	26,770	26,800	26,830	27,050	27,420	27,900	28,460	29,090	29,790	30,560	31,390	32,270	33,200	7
8	30,080	30,120	30,160	30,200	30,230	30,270	30,310	30,350	30,390	30,420	30,460	30,680	31,060	31,540	32,100	32,740	33,450	34,220	35,050	35,940	36,880	8
9	33,760	33,800	33,850	33,890	33,930	33,980	34,020	34,060	34,110	34,150	34,190	34,420	34,800	35,290	35,860	36,500	37,210	37,990	38,820	39,720	40,660	9
10	37,250	37,300	37,350	37,400	37,440	37,490	37,540	37,590	37,640	37,680	37,730	37,960	38,350	38,840	39,420	40,070	40,780	41,570	42,410	43,300	44,250	10
11	40,740	40,800	40,860	40,910	40,970	41,030	41,090	41,150	41,210	41,270	41,330	41,570	41,970	42,470	43,060	43,720	44,450	45,240	46,100	47,000	47,970	11
12	44,450	44,510	44,580	44,640	44,700	44,770	44,830	44,900	44,960	45,020	45,090	45,330	45,730	46,240	46,830	47,490	48,230	49,020	49,880	50,790	51,750	12
13	48,090	48,160	48,220	48,290	48,360	48,430	48,490	48,560	48,630	48,700	48,760	49,010	49,420	49,930	50,520	51,190	51,920	52,720	53,580	54,490	55,460	13
14	51,670	51,740	51,820	51,890	51,960	52,030	52,100	52,170	52,240	52,310	52,380	52,630	53,040	53,550	54,140	54,810	55,550	56,350	57,210	58,120	59,090	14
15	55,210	55,280	55,360	55,440	55,510	55,590	55,670	55,740	55,820	55,900	55,970	56,230	56,650	57,170	57,770	58,450	59,190	60,000	60,870	61,790	62,770	15
16	58,720	58,800	58,890	58,970	59,050	59,140	59,220	59,300	59,380	59,470	59,550	59,810	60,240	60,760	61,370	62,050	62,800	63,620	64,490	65,420	66,410	16
17	64,180	64,270	64,360	64,460	64,550	64,640	64,740	64,830	64,920	65,020	65,110	65,390	65,820	66,350	66,970	67,670	68,430	69,250	70,140	71,080	72,070	17
18	69,630	69,740	69,840	69,940	70,050	70,150	70,260	70,360	70,460	70,570	70,670	70,960	71,400	71,950	72,580	73,280	74,050	74,890	75,780	76,740	77,740	18
19	75,090	75,200	75,320	75,430	75,550	75,660	75,780	75,890	76,010	76,120	76,230	76,530	76,980	77,540	78,180	78,900	79,680	80,520	81,430	82,390	83,410	19
20	80,360	80,490	80,620	80,750	80,870	81,000	81,130	81,260	81,380	81,510	81,640	81,950	82,410	82,980	83,630	84,360	85,150	86,010	86,930	87,900	88,930	20
21	85,640	85,780	85,920	86,060	86,200	86,340	86,480	86,620	86,760	86,900	87,040	87,360	87,840	88,420	89,080	89,820	90,630	91,500	92,430	93,420	94,460	21
22	90,920	91,070	91,220	91,380	91,530	91,680	91,830	91,990	92,140	92,290	92,440	92,770	93,260	93,860	94,530	95,290	96,110	96,990	97,930	98,930	99,980	22
23	96,530	96,680	96,820	96,960	97,090	97,230	97,370	97,510	97,650	97,780	97,920	98,250	98,730	99,320	99,990	100,700	101,500	102,400	103,400	104,300	105,400	23
24	102,200	102,300	102,400	102,500	102,700	102,800	102,900	103,000	103,200	103,300	103,400	103,700	104,200	104,800	105,400	106,200	107,000	107,900	108,800	109,800	110,800	24
25	107,800	107,900	108,000	108,100	108,200	108,300	108,400	108,600	108,700	108,800	108,900	109,200	109,700	110,200	110,900	111,600	112,400	113,300	114,200	115,200	116,200	25
26	112,100	112,200	112,300	112,400	112,400	112,500	112,600	112,700	112,700	112,800	112,900	113,200	113,600	114,100	114,800	115,500	116,200	117,000	117,900	118,900	119,800	26
27	116,500	116,500	116,600	116,600	116,700	116,700	116,700	116,800	116,800	116,900	116,900	117,200	117,500	118,000	118,600	119,300	120,000	120,800	121,600	122,500	123,500	27
28	120,800	120,800	120,900	120,900	120,900	120,900	120,900	120,900	120,900	120,900	120,900	121,100	121,500	121,900	122,500	123,100	123,800	124,500	125,300	126,200	127,100	28

GATE ARRANGEMENT	HEADWATER ELEVATION																				GATE ARRANGEMENT
	818.0	818.1	818.2	818.3	818.4	818.5	818.6	818.7	818.8	818.9	819.0	819.1	819.2	819.3	819.4	819.5	819.6	819.7	819.8	819.9	820.0	
1																						1
2																						2
3																						3
4																						4
5	25,720	26,690	27,720	28,800	29,930																	5
6	29,290	30,270	31,300	32,380	33,510	34,690	35,910	37,170	38,480	39,830	41,220	42,650										6
7	33,200	34,190	35,230	36,310	37,450	38,630	39,850	41,120	42,430	43,790	45,190	46,620	48,100	49,620	51,180	52,780	54,410	56,090	57,800			7
8	36,880	37,870	38,910	40,010	41,140	42,330	43,560	44,830	46,150	47,510	48,910	50,350	51,840	53,360	54,920	56,530	58,170	59,840	61,560	63,310	65,100	8
9	40,660	41,660	42,710	43,800	44,950	46,130	47,370	48,650	49,970	51,340	52,740	54,190	55,680	57,210	58,780	60,380	62,030	63,710	65,430	67,190	68,980	9
10	44,250	45,250	46,310	47,410	48,560	49,750	50,990	52,280	53,600	54,970	56,380	57,840	59,330	60,860	62,440	64,050	65,700	67,390	69,110	70,880	72,670	10
11	47,970	48,990	50,060	51,180	52,350	53,560	54,820	56,120	57,470	58,860	60,290	61,760	63,270	64,810	66,400	68,030	69,690	71,400	73,140	74,910	76,730	11
12	51,750	52,780	53,850	54,970	56,140	57,360	58,620	59,930	61,280	62,670	64,100	65,580	67,100	68,650	70,250	71,880	73,560	75,270	77,020	78,810	80,630	12
13	55,460	56,490	57,560	58,690	59,860	61,080	62,350	63,650	65,010	66,400	67,840	69,310	70,830	72,390	73,990	75,630	77,300	79,020	80,770	82,560	84,380	13
14	59,090	60,120	61,200	62,320	63,500	64,720	65,980	67,290	68,640	70,040	71,470	72,950	74,460	76,020	77,610	79,240	80,920	82,620	84,370	86,160	87,980	14
15	62,770	63,800	64,880	66,010	67,190	68,410	69,680	70,990	72,340	73,740	75,180	76,660	78,180	79,740	81,340	82,980	84,660	86,370	88,130	89,920	91,740	15
16	66,410	67,440	68,530	69,660	70,850	72,070	73,350	74,670	76,030	77,430	78,870	80,360	81,890	83,450	85,060	86,700	88,390	90,110	91,870	93,660	95,500	16
17	72,070	73,120	74,220	75,360	76,550	77,790	79,080	80,400	81,780	83,190	84,640	86,140	87,680	89,250	90,870	92,520	94,220	95,950	97,720	99,520	101,400	17
18	77,740	78,800	79,900	81,060	82,260	83,510	84,810	86,140	87,520	88,950	90,410	91,920	93,470	95,050	96,680	98,340	100,000	101,800	103,600	105,400	107,200	18
19	83,410	84,470	85,590	86,760	87,970	89,230	90,530	91,880	93,270	94,710	96,180	97,700	99,260	100,900	102,500	104,200	105,900	107,600	109,400	111,200	113,100	19
20	88,930	90,010	91,140	92,320	93,540	94,810	96,130	97,490	98,890	100,300	101,800	103,400	104,900	106,500	108,200	109,900	111,600	113,400	115,200	117,000	118,900	20
21	94,460	95,550	96,690	97,880	99,110	100,400	101,700	103,100	104,500	106,000	107,500	109,000	110,600	112,200	113,900	115,600	117,300	119,100	120,900	122,700	124,600	21
22	99,980	101,100	102,200	103,400	104,700	106,000	107,300	108,700	110,100	111,600	113,100	114,700	116,300	117,900	119,600	121,300	123,000	124,800	126,600	128,500	130,400	22
23	105,400	106,500	107,600	108,800	110,100	111,400	112,700	114,100	115,500	117,000	118,500	120,100	121,600	123,300	124,900	126,700	128,400	130,200	132,000	133,900	135,800	23
24	110,800	111,900	113,000	114,200	115,500	116,800	118,100	119,500	120,900	122,400	123,900	125,400	127,000	128,700	130,300	132,000	133,800	135,600	137,400	139,300	141,200	24
25	116,200	117,300	118,500	119,700	120,900	122,200	123,500	124,900	126,300	127,800	129,300	130,800	132,400	134,000	135,700	137,400	139,200	141,000	142,800	144,600	146,500	25
26	119,800	121,000	122,100	123,400	124,600	125,900	127,300	128,700	130,100	131,600	133,100	134,700	136,300	138,000	139,700	141,400	143,200	145,000	146,800	148,700	150,600	26
27	123,500	124,600	125,800	127,100	128,300	129,700	131,100	132,500	133,900	135,400	137,000	138,600	140,200	141,900	143,600	145,300	147,100	149,000	150,800	152,700	154,700	27
28	127,100	128,300	129,500	130,800	132,100	133,400	134,800	136,300	137,800	139,300	140,900	142,500	144,100	145,800	147,500	149,300	151,100	153,000	154,800	156,800	158,700	28

HEADWATER 816 to 820
TAILWATER 775.51 to 776.5

See special instruction for preventing gate overflow on page 2.

MAY 2008

TELLICO DAM
SPILLWAY DISCHARGE
IN CUBIC FEET PER SECOND

GATE ARRANGEMENT	HEADWATER ELEVATION																				GATE ARRANGEMENT
	800.0	800.1	800.2	800.3	800.4	800.5	800.6	800.7	800.8	800.9	801.0	801.1	801.2	801.3	801.4	801.5	801.6	801.7	801.8	801.9	802.0	
1	2,520	2,520	2,530	2,540	2,540	2,550	2,550	2,560	2,560	2,570	2,570	2,580	2,580	2,590	2,590	2,600	2,610	2,610	2,620	2,620	2,630	1
2	5,490	5,500	5,510	5,520	5,530	5,550	5,560	5,570	5,580	5,590	5,600	5,620	5,630	5,640	5,650	5,660	5,670	5,690	5,700	5,710	5,720	2
3	8,650	8,670	8,690	8,710	8,720	8,740	8,760	8,780	8,800	8,820	8,840	8,850	8,870	8,890	8,910	8,930	8,950	8,960	8,980	9,000	9,020	3
4	11,560	11,590	11,620	11,650	11,670	11,700	11,730	11,760	11,790	11,810	11,840	11,870	11,890	11,920	11,950	11,970	12,000	12,030	12,050	12,080	12,100	4
5	14,760	14,790	14,820	14,860	14,890	14,920	14,950	14,990	15,020	15,050	15,090	15,120	15,150	15,180	15,210	15,240	15,270	15,300	15,330	15,360	15,390	5
6	17,640	17,680	17,710	17,750	17,790	17,820	17,860	17,890	17,930	17,960	18,000	18,030	18,070	18,100	18,140	18,180	18,210	18,240	18,280	18,310	18,350	6
7	20,520	20,560	20,610	20,650	20,690	20,730	20,780	20,820	20,860	20,900	20,940	20,990	21,030	21,070	21,110	21,150	21,200	21,240	21,280	21,320	21,360	7
8	23,190	23,240	23,290	23,340	23,390	23,440	23,480	23,530	23,580	23,630	23,680	23,730	23,780	23,820	23,870	23,920	23,970	24,020	24,060	24,110	24,160	8
9	25,900	25,960	26,020	26,070	26,130	26,190	26,240	26,300	26,350	26,410	26,460	26,520	26,580	26,630	26,690	26,740	26,790	26,850	26,900	26,960	27,010	9
10	28,450	28,510	28,570	28,640	28,700	28,760	28,820	28,890	28,950	29,010	29,080	29,140	29,200	29,260	29,320	29,380	29,450	29,510	29,570	29,630	29,690	10
11	30,830	30,900	30,970	31,040	31,110	31,180	31,250	31,320	31,390	31,460	31,530	31,600	31,670	31,740	31,810	31,880	31,940	32,010	32,080	32,150	32,220	11
12	33,560	33,630	33,700	33,780	33,850	33,920	34,000	34,070	34,140	34,220	34,290	34,360	34,440	34,520	34,590	34,670	34,750	34,820	34,900	34,970	35,050	12
13	36,170	36,250	36,330	36,420	36,500	36,580	36,660	36,740	36,820	36,890	36,970	37,060	37,140	37,230	37,310	37,390	37,480	37,560	37,640	37,720	37,810	13
14	38,690	38,780	38,870	38,960	39,050	39,140	39,230	39,320	39,400	39,490	39,580	39,670	39,760	39,850	39,940	40,030	40,120	40,210	40,300	40,390	40,480	14
15	41,120	41,220	41,320	41,420	41,520	41,610	41,710	41,810	41,910	42,000	42,100	42,200	42,300	42,400	42,490	42,590	42,690	42,790	42,880	42,980	43,070	15
16	43,470	43,580	43,680	43,790	43,900	44,010	44,110	44,220	44,320	44,430	44,540	44,640	44,750	44,860	44,960	45,070	45,170	45,280	45,380	45,490	45,590	16
17	47,400	47,520	47,630	47,750	47,860	47,980	48,090	48,200	48,320	48,430	48,540	48,650	48,760	48,870	48,980	49,090	49,200	49,310	49,420	49,530	49,640	17
18	51,340	51,460	51,590	51,710	51,830	51,950	52,070	52,190	52,310	52,430	52,550	52,660	52,780	52,890	53,010	53,120	53,230	53,350	53,460	53,570	53,680	18
19	55,270	55,410	55,540	55,670	55,800	55,920	56,050	56,180	56,300	56,430	56,550	56,670	56,790	56,910	57,030	57,150	57,260	57,380	57,500	57,610	57,720	19
20	56,960	57,170	57,380	57,580	57,790	58,000	58,200	58,410	58,620	58,820	59,030	59,230	59,430	59,640	59,840	60,040	60,240	60,440	60,640	60,840	61,040	20
21	58,650	58,930	59,220	59,500	59,790	60,070	60,360	60,650	60,930	61,220	61,500	61,790	62,070	62,360	62,650	62,930	63,220	63,510	63,790	64,080	64,370	21
22	60,340	60,700	61,060	61,420	61,790	62,150	62,510	62,880	63,250	63,610	63,980	64,350	64,720	65,090	65,460	65,830	66,200	66,570	66,940	67,310	67,690	22
23	60,340	60,700	61,060	61,420	61,790	62,150	62,510	62,880	63,250	63,610	63,980	64,350	64,720	65,090	65,460	65,830	66,200	66,570	66,940	67,310	67,690	23
24	60,340	60,700	61,060	61,420	61,790	62,150	62,510	62,880	63,250	63,610	63,980	64,350	64,720	65,090	65,460	65,830	66,200	66,570	66,940	67,310	67,690	24
25	60,340	60,700	61,060	61,420	61,790	62,150	62,510	62,880	63,250	63,610	63,980	64,350	64,720	65,090	65,460	65,830	66,200	66,570	66,940	67,310	67,690	25
26	60,340	60,700	61,060	61,420	61,790	62,150	62,510	62,880	63,250	63,610	63,980	64,350	64,720	65,090	65,460	65,830	66,200	66,570	66,940	67,310	67,690	26
27	60,340	60,700	61,060	61,420	61,790	62,150	62,510	62,880	63,250	63,610	63,980	64,350	64,720	65,090	65,460	65,830	66,200	66,570	66,940	67,310	67,690	27
28	60,340	60,700	61,060	61,420	61,790	62,150	62,510	62,880	63,250	63,610	63,980	64,350	64,720	65,090	65,460	65,830	66,200	66,570	66,940	67,310	67,690	28

GATE ARRANGEMENT	HEADWATER ELEVATION																				GATE ARRANGEMENT
	802.0	802.1	802.2	802.3	802.4	802.5	802.6	802.7	802.8	802.9	803.0	803.1	803.2	803.3	803.4	803.5	803.6	803.7	803.8	803.9	804.0	
1	2,630	2,630	2,640	2,640	2,650	2,650	2,660	2,660	2,670	2,670	2,680	2,680	2,690	2,690	2,700	2,700	2,710	2,710	2,720	2,720	2,730	1
2	5,720	5,730	5,740	5,750	5,770	5,780	5,790	5,800	5,810	5,820	5,830	5,840	5,860	5,870	5,880	5,890	5,900	5,910	5,920	5,930	5,940	2
3	9,020	9,040	9,050	9,070	9,090	9,110	9,130	9,140	9,160	9,180	9,200	9,210	9,230	9,250	9,270	9,280	9,300	9,320	9,340	9,350	9,370	3
4	12,100	12,130	12,160	12,180	12,210	12,230	12,260	12,280	12,310	12,330	12,360	12,380	12,400	12,430	12,450	12,470	12,490	12,520	12,540	12,560	12,580	4
5	15,390	15,420	15,450	15,480	15,510	15,540	15,570	15,600	15,630	15,660	15,690	15,720	15,750	15,780	15,810	15,840	15,870	15,900	15,930	15,960	15,990	5
6	18,350	18,380	18,420	18,450	18,490	18,520	18,560	18,590	18,620	18,660	18,690	18,730	18,760	18,790	18,830	18,860	18,900	18,930	18,960	19,000	19,030	6
7	21,360	21,400	21,440	21,480	21,520	21,570	21,610	21,650	21,690	21,730	21,770	21,810	21,850	21,890	21,930	21,970	22,010	22,050	22,090	22,130	22,170	7
8	24,160	24,210	24,250	24,300	24,350	24,400	24,440	24,490	24,540	24,580	24,630	24,680	24,720	24,770	24,820	24,860	24,910	24,950	25,000	25,050	25,090	8
9	27,010	27,070	27,120	27,180	27,230	27,280	27,340	27,390	27,440	27,500	27,550	27,600	27,660	27,710	27,760	27,810	27,870	27,920	27,970	28,020	28,080	9
10	29,690	29,750	29,810	29,870	29,930	29,990	30,050	30,110	30,170	30,230	30,290	30,350	30,410	30,470	30,530	30,590	30,650	30,710	30,770	30,830	30,890	10
11	32,220	32,280	32,350	32,420	32,480	32,550	32,620	32,690	32,750	32,820	32,880	32,950	33,020	33,080	33,150	33,210	33,280	33,340	33,410	33,480	33,540	11
12	35,050	35,120	35,200	35,270	35,350	35,420	35,500	35,570	35,650	35,720	35,790	35,870	35,940	36,010	36,080	36,160	36,230	36,300	36,370	36,440	36,510	12
13	37,810	37,890	37,970	38,050	38,130	38,210	38,290	38,380	38,460	38,540	38,620	38,700	38,780	38,860	38,940	39,020	39,100	39,180	39,260	39,340	39,420	13
14	40,480	40,570	40,660	40,750	40,840	40,930	41,020	41,110	41,200	41,280	41,370	41,460	41,550	41,640	41,720	41,810	41,900	41,980	42,070	42,160	42,240	14
15	43,070	43,170	43,270	43,370	43,460	43,560	43,650	43,750	43,840	43,940	44,040	44,130	44,230	44,330	44,420	44,520	44,610	44,710	44,810	44,900	45,000	15
16	45,590	45,700	45,800	45,910	46,010	46,110	46,220	46,320	46,420	46,530	46,630	46,730	46,840	46,940	47,040	47,150	47,250	47,350	47,450	47,560	47,660	16
17	49,640	49,750	49,850	49,960	50,070	50,180	50,280	50,390	50,490	50,600	50,700	50,810	50,910	51,020	51,120	51,230	51,330	51,440	51,540	51,640	51,740	17
18	53,680	53,790	53,900	54,020	54,130	54,240	54,350	54,450	54,560	54,670	54,780	54,890	54,990	55,100	55,200	55,310	55,410	55,520	55,620	55,730	55,830	18
19	57,720	57,840	57,960	58,070	58,180	58,300	58,410	58,520	58,630	58,740	58,850	58,960	59,070	59,180	59,290	59,390	59,500	59,600	59,710	59,810	59,910	19
20	61,040	61,250	61,450	61,650	61,850	62,050	62,250	62,450	62,660	62,860	63,050	63,250	63,450	63,650	63,850	64,050	64,250	64,450	64,640	64,810	64,950	20
21	64,370	64,650	64,940	65,230	65,520	65,810	66,100	66,390	66,680	66,970	67,260	67,550	67,840	68,130	68,420	68,710	69,000	69,290	69,580	69,800	69,980	21
22	67,690	68,060	68,440	68,810	69,190	69,560	69,940	70,320	70,700	71,080	71,460	71,840	72,220	72,600	72,980	73,360	73,750	74,130	74,510	74,790	75,020	22
23	67,690	68,060	68,440	68,810	69,190	69,560	69,940	70,320	70,700	71,080	71,460	71,840	72,220	72,600	72,980	73,360	73,750	74,130	74,510	74,830	75,110	23
24	67,690	68,060	68,440	68,810	69,190	69,560	69,940	70,320	70,700	71,080	71,460	71,840	72,220	72,600	72,980	73,360	73,750	74,130	74,510	74,860	75,190	24
25	67,690	68,060	68,440	68,810	69,190	69,560	69,940	70,320	70,700	71,080	71,460	71,840	72,220	72,600	72,980	73,360	73,750	74,130	74,510	74,900	75,280	25
26	67,690	68,060	68,440	68,810	69,190	69,560	69,940	70,320	70,700	71,080	71,460	71,840	72,220	72,600	72,980	73,360	73,750	74,130	74,510	74,900	75,280	26
27	67,690	68,060	68,440	68,810	69,190	69,560	69,940	70,320	70,700	71,080	71,460	71,840	72,220	72,600	72,980	73,360	73,750	74,130	74,510	74,900	75,280	27
28	67,690	68,060	68,440	68,810	69,190	69,560	69,940	70,320	70,700	71,080	71,460	71,840	72,220	72,600	72,980	73,360	73,750	74,130	74,510	74,900	75,280	28

MAY 2008

HEADWATER 800 to 804
TAILWATER 776.51 to 777.5

TELLICO DAM
SPILLWAY DISCHARGE
IN CUBIC FEET PER SECOND

GATE ARRANGEMENT	HEADWATER ELEVATION																				GATE ARRANGEMENT
	804.0	804.1	804.2	804.3	804.4	804.5	804.6	804.7	804.8	804.9	805.0	805.1	805.2	805.3	805.4	805.5	805.6	805.7	805.8	805.9	806.0	
1	2,730	2,730	2,740	2,740	2,750	2,750	2,760	2,760	2,770	2,770	2,780	2,780	2,790	2,790	2,800	2,800	2,810	2,810	2,820	2,820	2,830	1
2	5,940	5,960	5,970	5,980	5,990	6,000	6,010	6,020	6,030	6,040	6,050	6,060	6,080	6,090	6,100	6,110	6,120	6,130	6,140	6,150	6,160	2
3	9,370	9,390	9,410	9,420	9,440	9,460	9,480	9,490	9,510	9,530	9,540	9,560	9,580	9,590	9,610	9,630	9,650	9,660	9,680	9,700	9,710	3
4	12,580	12,610	12,640	12,660	12,690	12,720	12,740	12,770	12,800	12,830	12,850	12,880	12,900	12,920	12,950	12,970	13,000	13,020	13,040	13,070	13,090	4
5	15,990	16,020	16,050	16,080	16,110	16,140	16,170	16,200	16,230	16,250	16,280	16,310	16,340	16,370	16,400	16,430	16,460	16,490	16,520	16,540	16,570	5
6	19,030	19,060	19,100	19,130	19,160	19,200	19,230	19,260	19,300	19,330	19,360	19,390	19,430	19,460	19,490	19,530	19,560	19,590	19,620	19,650	19,690	6
7	22,170	22,210	22,250	22,290	22,330	22,370	22,410	22,440	22,480	22,520	22,560	22,600	22,640	22,680	22,720	22,760	22,790	22,830	22,870	22,910	22,950	7
8	25,090	25,140	25,180	25,230	25,270	25,320	25,360	25,410	25,450	25,500	25,540	25,590	25,630	25,680	25,720	25,770	25,810	25,860	25,900	25,950	25,990	8
9	28,080	28,130	28,180	28,230	28,280	28,340	28,390	28,440	28,490	28,540	28,590	28,650	28,700	28,750	28,800	28,850	28,900	28,950	29,000	29,050	29,100	9
10	30,890	30,940	31,000	31,060	31,120	31,180	31,230	31,290	31,350	31,410	31,470	31,520	31,580	31,640	31,690	31,750	31,810	31,870	31,920	31,980	32,030	10
11	33,540	33,610	33,670	33,730	33,800	33,860	33,930	33,990	34,060	34,120	34,180	34,250	34,310	34,370	34,440	34,500	34,560	34,630	34,690	34,750	34,810	11
12	36,510	36,590	36,660	36,730	36,800	36,870	36,940	37,010	37,090	37,160	37,230	37,300	37,370	37,440	37,510	37,580	37,650	37,720	37,790	37,860	37,930	12
13	39,420	39,500	39,580	39,660	39,730	39,810	39,890	39,970	40,040	40,120	40,200	40,280	40,350	40,430	40,510	40,590	40,660	40,740	40,820	40,890	40,970	13
14	42,240	42,330	42,420	42,500	42,590	42,680	42,760	42,850	42,930	43,020	43,110	43,190	43,280	43,360	43,450	43,530	43,620	43,700	43,780	43,870	43,950	14
15	45,000	45,090	45,180	45,280	45,370	45,460	45,560	45,650	45,740	45,830	45,930	46,020	46,110	46,200	46,300	46,390	46,480	46,570	46,660	46,760	46,850	15
16	47,660	47,760	47,860	47,970	48,070	48,170	48,270	48,380	48,480	48,580	48,680	48,780	48,880	48,980	49,080	49,180	49,280	49,380	49,480	49,580	49,680	16
17	51,740	51,850	51,960	52,070	52,180	52,290	52,400	52,500	52,610	52,720	52,820	52,940	53,050	53,160	53,270	53,380	53,490	53,600	53,710	53,820	53,930	17
18	55,830	55,940	56,060	56,170	56,290	56,400	56,520	56,630	56,740	56,860	56,970	57,090	57,210	57,340	57,460	57,580	57,700	57,820	57,940	58,060	58,180	18
19	59,910	60,040	60,160	60,280	60,400	60,520	60,640	60,760	60,880	61,000	61,110	61,250	61,380	61,510	61,650	61,780	61,910	62,040	62,170	62,300	62,430	19
20	64,950	65,100	65,260	65,410	65,570	65,720	65,870	66,020	66,170	66,330	66,480	66,640	66,800	66,960	67,110	67,270	67,430	67,590	67,750	67,900	68,060	20
21	69,980	70,170	70,360	70,550	70,730	70,920	71,100	71,290	71,470	71,660	71,840	72,030	72,210	72,400	72,580	72,770	72,950	73,140	73,320	73,500	73,690	21
22	75,020	75,240	75,460	75,680	75,900	76,120	76,340	76,550	76,770	76,990	77,200	77,410	77,630	77,840	78,050	78,260	78,470	78,690	78,890	79,100	79,310	22
23	75,110	75,380	75,660	75,930	76,210	76,480	76,760	77,030	77,310	77,580	77,860	78,130	78,400	78,670	78,950	79,220	79,490	79,760	80,030	80,300	80,580	23
24	75,190	75,530	75,860	76,190	76,520	76,850	77,180	77,520	77,850	78,180	78,510	78,840	79,180	79,510	79,840	80,170	80,510	80,840	81,170	81,510	81,840	24
25	75,280	75,670	76,060	76,440	76,830	77,220	77,610	78,000	78,390	78,780	79,170	79,560	79,950	80,340	80,740	81,130	81,520	81,920	82,310	82,710	83,100	25
26	75,280	75,670	76,060	76,440	76,830	77,220	77,610	78,000	78,390	78,780	79,170	79,560	79,950	80,340	80,740	81,130	81,520	81,920	82,310	82,710	83,100	26
27	75,280	75,670	76,060	76,440	76,830	77,220	77,610	78,000	78,390	78,780	79,170	79,560	79,950	80,340	80,740	81,130	81,520	81,920	82,310	82,710	83,100	27
28	75,280	75,670	76,060	76,440	76,830	77,220	77,610	78,000	78,390	78,780	79,170	79,560	79,950	80,340	80,740	81,130	81,520	81,920	82,310	82,710	83,100	28

GATE ARRANGEMENT	HEADWATER ELEVATION																				GATE ARRANGEMENT
	806.0	806.1	806.2	806.3	806.4	806.5	806.6	806.7	806.8	806.9	807.0	807.1	807.2	807.3	807.4	807.5	807.6	807.7	807.8	807.9	808.0	
1	2,830	2,830	2,840	2,840	2,850	2,850	2,860	2,860	2,870	2,870	2,880	2,880	2,890	2,890	2,900	2,900	2,910	2,910	2,910	2,920	2,920	1
2	6,160	6,170	6,180	6,190	6,200	6,210	6,220	6,230	6,250	6,260	6,270	6,280	6,290	6,300	6,310	6,320	6,330	6,340	6,350	6,360	6,370	2
3	9,710	9,730	9,750	9,760	9,780	9,800	9,810	9,830	9,850	9,860	9,880	9,890	9,910	9,930	9,940	9,960	9,980	9,990	10,010	10,030	10,040	3
4	13,090	13,120	13,140	13,160	13,190	13,210	13,230	13,260	13,280	13,310	13,330	13,350	13,370	13,400	13,420	13,440	13,460	13,490	13,510	13,530	13,550	4
5	16,570	16,600	16,630	16,670	16,700	16,730	16,760	16,790	16,820	16,850	16,880	16,910	16,930	16,960	16,980	17,010	17,040	17,060	17,090	17,120	17,140	5
6	19,690	19,720	19,750	19,780	19,820	19,850	19,880	19,910	19,940	19,980	20,010	20,040	20,070	20,100	20,130	20,170	20,200	20,230	20,260	20,290	20,320	6
7	22,950	22,990	23,020	23,060	23,100	23,140	23,180	23,210	23,250	23,290	23,330	23,370	23,400	23,440	23,480	23,520	23,550	23,590	23,630	23,660	23,700	7
8	25,990	26,030	26,080	26,120	26,170	26,210	26,250	26,300	26,340	26,380	26,430	26,470	26,510	26,560	26,600	26,640	26,690	26,730	26,770	26,820	26,860	8
9	29,100	29,150	29,200	29,250	29,300	29,350	29,400	29,450	29,500	29,550	29,600	29,650	29,700	29,750	29,800	29,850	29,900	29,950	29,990	30,040	30,090	9
10	32,030	32,090	32,150	32,200	32,260	32,320	32,370	32,430	32,480	32,540	32,590	32,650	32,710	32,760	32,820	32,870	32,930	32,980	33,040	33,090	33,140	10
11	34,810	34,880	34,940	35,000	35,060	35,120	35,190	35,250	35,310	35,370	35,430	35,490	35,560	35,620	35,680	35,740	35,800	35,860	35,920	35,980	36,040	11
12	37,930	38,000	38,070	38,140	38,210	38,270	38,340	38,410	38,480	38,550	38,620	38,680	38,750	38,820	38,890	38,960	39,020	39,090	39,160	39,230	39,290	12
13	40,970	41,050	41,120	41,200	41,280	41,350	41,430	41,500	41,580	41,650	41,730	41,800	41,880	41,950	42,030	42,100	42,180	42,250	42,330	42,400	42,470	13
14	43,950	44,040	44,120	44,200	44,290	44,370	44,450	44,530	44,620	44,700	44,780	44,860	44,950	45,030	45,110	45,190	45,270	45,350	45,430	45,520	45,600	14
15	46,850	46,940	47,030	47,120	47,210	47,300	47,390	47,480	47,570	47,660	47,750	47,840	47,930	48,020	48,110	48,200	48,280	48,370	48,460	48,550	48,640	15
16	49,680	49,780	49,880	49,970	50,070	50,170	50,270	50,370	50,460	50,560	50,660	50,750	50,850	50,950	51,040	51,140	51,230	51,330	51,430	51,520	51,620	16
17	53,930	54,040	54,150	54,270	54,380	54,490	54,600	54,710	54,820	54,930	55,040	55,150	55,260	55,370	55,480	55,590	55,700	55,810	55,910	56,020	56,130	17
18	58,180	58,310	58,430	58,560	58,680	58,800	58,930	59,050	59,180	59,300	59,420	59,540	59,670	59,790	59,910	60,040	60,160	60,280	60,400	60,520	60,640	18
19	62,430	62,570	62,710	62,850	62,990	63,120	63,260	63,400	63,530	63,670	63,800	63,940	64,080	64,210	64,350	64,480	64,620	64,760	64,890	65,020	65,160	19
20	68,060	68,190	68,320	68,450	68,570	68,700	68,830	68,950	69,080	69,200	69,330	69,450	69,570	69,690	69,810	69,930	70,050	70,170	70,290	70,410	70,530	20
21	73,690	73,810	73,920	74,040	74,160	74,280	74,390	74,510	74,620	74,740	74,850	74,960	75,060	75,170	75,280	75,380	75,490	75,590	75,690	75,790	75,900	21
22	79,310	79,420	79,530	79,640	79,750	79,860	79,960	80,070	80,170	80,270	80,370	80,470	80,560	80,650	80,740	80,830	80,920	81,010	81,090	81,180	81,260	22
23	80,580	80,780	80,990	81,190	81,400	81,600	81,800	82,010	82,210	82,410	82,610	82,810	83,000	83,200	83,400	83,590	83,780	83,980	84,170	84,360	84,550	23
24	81,840	82,140	82,440	82,740	83,050	83,350	83,650	83,950	84,250	84,550	84,850	85,150	85,450	85,750	86,050	86,350	86,650	86,950	87,240	87,540	87,840	24
25	83,100	83,500	83,900	84,300	84,690	85,090	85,490	85,890	86,290	86,690	87,090	87,490	87,900	88,300	88,700	89,110	89,510	89,920	90,320	90,730	91,130	25
26	83,100	83,500	83,900	84,300	84,690	85,090	85,490	85,890	86,290	86,690	87,090	87,490	87,900	88,300	88,700	89,110	89,510	89,920	90,320	90,730	91,130	26
27	83,100	83,500	83,900	84,300	84,690	85,090	85,490	85,890	86,290	86,690	87,090	87,490	87,900	88,300	88,700	89,110	89,510	89,920	90,320	90,730	91,130	27
28	83,100	83,500	83,900	84,300	84,690	85,090	85,490	85,890	86,290	86,690	87,090	87,490	87,900	88,300	88,700	89,110	89,510	89,920	90,320	90,730	91,130	28

HEADWATER 804 to 808
TAILWATER 776.51 to 777.5

MAY 2008

TELLICO DAM
SPILLWAY DISCHARGE
IN CUBIC FEET PER SECOND

HEADWATER ELEVATION

GATE ARRANGEMENT	808.0	808.1	808.2	808.3	808.4	808.5	808.6	808.7	808.8	808.9	809.0	809.1	809.2	809.3	809.4	809.5	809.6	809.7	809.8	809.9	810.0	GATE ARRANGEMENT
1	2,920	2,930	2,930	2,940	2,940	2,950	2,950	2,960	2,960	2,970	2,970	2,980	2,980	2,980	2,990	2,990	3,000	3,000	3,010	3,010	3,020	1
2	6,370	6,380	6,390	6,400	6,410	6,420	6,430	6,440	6,450	6,460	6,470	6,480	6,490	6,500	6,510	6,520	6,530	6,540	6,550	6,560	6,570	2
3	10,040	10,060	10,070	10,090	10,110	10,120	10,140	10,150	10,170	10,190	10,200	10,220	10,230	10,250	10,270	10,280	10,300	10,310	10,330	10,340	10,360	3
4	13,550	13,580	13,600	13,620	13,640	13,660	13,690	13,710	13,730	13,750	13,770	13,790	13,810	13,830	13,850	13,870	13,890	13,910	13,930	13,950	13,970	4
5	17,140	17,170	17,200	17,230	17,250	17,280	17,310	17,340	17,360	17,390	17,420	17,450	17,470	17,500	17,520	17,550	17,570	17,600	17,620	17,650	17,670	5
6	20,320	20,350	20,390	20,420	20,450	20,480	20,510	20,540	20,570	20,600	20,630	20,660	20,700	20,730	20,760	20,790	20,820	20,850	20,880	20,910	20,940	6
7	23,700	23,740	23,780	23,810	23,850	23,890	23,920	23,960	24,000	24,030	24,070	24,110	24,140	24,180	24,220	24,250	24,290	24,320	24,360	24,400	24,430	7
8	26,860	26,900	26,940	26,990	27,030	27,070	27,110	27,160	27,200	27,240	27,280	27,320	27,370	27,410	27,450	27,490	27,530	27,580	27,620	27,660	27,700	8
9	30,090	30,140	30,190	30,240	30,290	30,330	30,380	30,430	30,480	30,530	30,570	30,620	30,670	30,720	30,770	30,810	30,860	30,910	30,960	31,000	31,050	9
10	33,140	33,200	33,250	33,310	33,360	33,420	33,470	33,520	33,580	33,630	33,690	33,740	33,790	33,850	33,900	33,950	34,010	34,060	34,110	34,160	34,220	10
11	36,040	36,100	36,160	36,220	36,280	36,340	36,400	36,460	36,520	36,580	36,640	36,700	36,760	36,820	36,880	36,940	37,000	37,060	37,120	37,180	37,240	11
12	39,290	39,360	39,430	39,490	39,560	39,630	39,690	39,760	39,820	39,890	39,960	40,020	40,090	40,150	40,220	40,280	40,350	40,410	40,480	40,540	40,610	12
13	42,470	42,550	42,620	42,690	42,770	42,840	42,910	42,990	43,060	43,130	43,200	43,280	43,350	43,420	43,490	43,570	43,640	43,710	43,780	43,850	43,920	13
14	45,600	45,680	45,760	45,840	45,920	46,000	46,080	46,160	46,240	46,320	46,400	46,480	46,550	46,630	46,710	46,790	46,870	46,950	47,030	47,100	47,180	14
15	48,640	48,720	48,810	48,900	48,990	49,070	49,160	49,250	49,330	49,420	49,510	49,590	49,680	49,760	49,850	49,940	50,020	50,110	50,190	50,280	50,360	15
16	51,620	51,710	51,810	51,900	52,000	52,090	52,180	52,280	52,370	52,460	52,560	52,650	52,740	52,840	52,930	53,020	53,110	53,210	53,300	53,390	53,480	16
17	56,130	56,240	56,350	56,450	56,560	56,670	56,770	56,880	56,990	57,090	57,200	57,310	57,410	57,520	57,620	57,730	57,830	57,940	58,040	58,150	58,250	17
18	60,640	60,770	60,890	61,010	61,130	61,250	61,370	61,490	61,600	61,720	61,840	61,960	62,080	62,200	62,310	62,430	62,550	62,670	62,780	62,900	63,020	18
19	65,160	65,290	65,430	65,560	65,690	65,830	65,960	66,090	66,220	66,350	66,480	66,620	66,750	66,880	67,010	67,140	67,270	67,400	67,530	67,650	67,780	19
20	70,530	70,650	70,760	70,880	71,000	71,110	71,230	71,350	71,460	71,570	71,690	71,800	71,910	72,020	72,130	72,240	72,340	72,450	72,560	72,670	72,770	20
21	75,900	76,000	76,100	76,200	76,300	76,400	76,500	76,600	76,700	76,800	76,890	76,980	77,070	77,160	77,250	77,340	77,420	77,510	77,590	77,680	77,760	21
22	81,260	81,350	81,440	81,520	81,610	81,690	81,780	81,860	81,940	82,020	82,100	82,170	82,230	82,300	82,370	82,430	82,500	82,560	82,630	82,690	82,750	22
23	84,550	84,750	84,940	85,130	85,330	85,520	85,710	85,900	86,090	86,280	86,470	86,650	86,840	87,020	87,200	87,380	87,560	87,740	87,920	88,100	88,280	23
24	87,840	88,140	88,440	88,740	89,040	89,340	89,640	89,940	90,240	90,550	90,850	91,140	91,440	91,740	92,040	92,330	92,630	92,930	93,220	93,520	93,820	24
25	91,130	91,540	91,950	92,350	92,760	93,170	93,580	93,990	94,400	94,810	95,220	95,630	96,040	96,460	96,870	97,280	97,700	98,110	98,520	98,940	99,360	25
26	91,130	91,540	91,950	92,350	92,760	93,170	93,580	93,990	94,400	94,810	95,220	95,630	96,040	96,460	96,870	97,280	97,700	98,110	98,520	98,940	99,360	26
27	91,130	91,540	91,950	92,350	92,760	93,170	93,580	93,990	94,400	94,810	95,220	95,630	96,040	96,460	96,870	97,280	97,700	98,110	98,520	98,940	99,360	27
28	91,130	91,540	91,950	92,350	92,760	93,170	93,580	93,990	94,400	94,810	95,220	95,630	96,040	96,460	96,870	97,280	97,700	98,110	98,520	98,940	99,360	28

HEADWATER ELEVATION

GATE ARRANGEMENT	810.0	810.1	810.2	810.3	810.4	810.5	810.6	810.7	810.8	810.9	811.0	811.1	811.2	811.3	811.4	811.5	811.6	811.7	811.8	811.9	812.0	GATE ARRANGEMENT
1	3,020	3,020	3,030	3,030	3,040	3,040	3,040	3,050	3,050	3,060	3,060	3,070	3,070	3,080	3,080	3,080	3,090	3,090	3,100	3,100	3,110	1
2	6,570	6,580	6,590	6,600	6,610	6,620	6,630	6,640	6,650	6,660	6,670	6,680	6,690	6,700	6,710	6,720	6,730	6,740	6,750	6,760	6,770	2
3	10,360	10,380	10,390	10,410	10,420	10,440	10,450	10,470	10,490	10,500	10,520	10,530	10,550	10,560	10,580	10,590	10,610	10,620	10,640	10,650	10,670	3
4	13,970	13,990	14,010	14,030	14,050	14,070	14,090	14,110	14,130	14,150	14,170	14,190	14,210	14,230	14,250	14,260	14,280	14,300	14,320	14,340	14,360	4
5	17,670	17,700	17,730	17,750	17,780	17,800	17,830	17,850	17,880	17,900	17,930	17,950	17,980	18,000	18,030	18,050	18,070	18,100	18,120	18,150	18,170	5
6	20,940	20,970	21,000	21,030	21,060	21,090	21,120	21,150	21,180	21,210	21,240	21,270	21,300	21,330	21,360	21,390	21,420	21,450	21,480	21,510	21,540	6
7	24,430	24,470	24,500	24,540	24,580	24,610	24,650	24,680	24,720	24,750	24,790	24,820	24,860	24,900	24,930	24,970	25,000	25,040	25,070	25,110	25,140	7
8	27,700	27,740	27,780	27,820	27,870	27,910	27,950	27,990	28,030	28,070	28,110	28,150	28,190	28,230	28,270	28,310	28,350	28,400	28,440	28,480	28,520	8
9	31,050	31,100	31,140	31,190	31,240	31,280	31,330	31,380	31,420	31,470	31,520	31,560	31,610	31,660	31,700	31,750	31,800	31,840	31,890	31,930	31,980	9
10	34,220	34,270	34,320	34,380	34,430	34,480	34,530	34,590	34,640	34,690	34,740	34,790	34,850	34,900	34,950	35,000	35,050	35,100	35,160	35,210	35,260	10
11	37,240	37,300	37,360	37,420	37,480	37,540	37,600	37,660	37,720	37,780	37,840	37,900	37,960	38,020	38,080	38,140	38,200	38,260	38,310	38,370	38,430	11
12	40,610	40,680	40,740	40,810	40,880	40,940	41,010	41,080	41,140	41,210	41,270	41,340	41,410	41,470	41,540	41,600	41,670	41,740	41,800	41,870	41,930	12
13	43,920	44,000	44,070	44,140	44,210	44,280	44,360	44,430	44,500	44,570	44,640	44,710	44,790	44,860	44,930	45,000	45,070	45,140	45,210	45,280	45,350	13
14	47,180	47,260	47,340	47,420	47,490	47,570	47,650	47,720	47,800	47,880	47,960	48,030	48,110	48,180	48,260	48,340	48,410	48,490	48,560	48,640	48,720	14
15	50,360	50,450	50,530	50,610	50,700	50,780	50,870	50,950	51,030	51,120	51,200	51,280	51,370	51,450	51,530	51,620	51,700	51,780	51,860	51,940	52,030	15
16	53,480	53,570	53,670	53,760	53,850	53,940	54,030	54,120	54,210	54,300	54,390	54,480	54,570	54,660	54,750	54,840	54,930	55,020	55,110	55,200	55,280	16
17	58,250	58,350	58,460	58,560	58,660	58,770	58,870	58,970	59,080	59,180	59,280	59,380	59,480	59,590	59,690	59,790	59,890	59,990	60,090	60,190	60,290	17
18	63,020	63,130	63,250	63,360	63,480	63,600	63,710	63,830	63,940	64,050	64,170	64,280	64,400	64,510	64,620	64,740	64,850	64,960	65,070	65,190	65,300	18
19	67,780	67,910	68,040	68,170	68,300	68,420	68,550	68,680	68,800	68,930	69,060	69,180	69,310	69,430	69,560	69,680	69,810	69,930	70,060	70,180	70,310	19
20	72,770	72,880	72,990	73,100	73,220	73,320	73,430	73,540	73,650	73,760	73,870	73,990	74,120	74,250	74,370	74,500	74,630	74,750	74,880	75,000	75,130	20
21	77,760	77,850	77,950	78,040	78,130	78,230	78,320	78,410	78,500	78,590	78,680	78,810	78,930	79,060	79,190	79,320	79,440	79,570	79,700	79,820	79,950	21
22	82,750	82,830	82,900	82,980	83,050	83,130	83,200	83,270	83,350	83,420	83,490	83,620	83,750	83,880	84,000	84,130	84,260	84,390	84,510	84,640	84,770	22
23	88,280	88,470	88,660	88,850	89,040	89,230	89,420	89,610	89,800	89,980	90,170	90,400	90,620	90,820	90,980	91,150	91,320	91,480	91,650	91,810	91,970	23
24	93,820	94,120	94,430	94,730	95,030	95,340	95,640	95,940	96,250	96,550	96,850	97,180	97,500	97,760	97,960	98,170	98,370	98,580	98,780	98,980	99,180	24
25	99,360	99,770	100,200	100,600	101,000	101,400	101,900	102,300	102,700	103,100	103,500	104,000	104,400	104,700	104,900	105,200	105,400	105,700	105,900	106,100	106,400	25
26	99,360	99,770	100,200	100,600	101,000	101,400	101,900	102,300	102,700	103,100	103,500	104,000	104,400	104,700	105,000	105,300	105,600	105,900	106,200	106,500	106,800	26
27	99,360	99,770	100,200	100,600	101,000	101,400	101,900	102,300	102,700	103,100	103,500	104,000	104,400	104,800	105,100	105,500	105,900	106,200	106,600	106,900	107,300	27
28	99,360	99,770	100,200	100,600	101,000	101,400	101,900	102,300	102,700	103,100	103,500	104,000	104,400	104,800	105,200	105,600	106,100	106,500	106,900	107,300	107,800	28

MAY 2008

HEADWATER 808 to 812
TAILWATER 776.51 to 777.5

TELLICO DAM
SPILLWAY DISCHARGE
IN CUBIC FEET PER SECOND

HEADWATER ELEVATION

GATE ARRANGEMENT	812.0	812.1	812.2	812.3	812.4	812.5	812.6	812.7	812.8	812.9	813.0	813.1	813.2	813.3	813.4	813.5	813.6	813.7	813.8	813.9	814.0	GATE ARRANGEMENT
1	3,110	3,110	3,120	3,120	3,120	3,130	3,130	3,140	3,140	3,150	3,150	3,160	3,160	3,160	3,170	3,170	3,180	3,180	3,190	3,190	3,190	1
2	6,770	6,780	6,790	6,800	6,810	6,820	6,830	6,840	6,850	6,850	6,860	6,870	6,880	6,890	6,900	6,910	6,920	6,930	6,940	6,950	6,960	2
3	10,670	10,690	10,700	10,720	10,730	10,750	10,760	10,780	10,790	10,810	10,820	10,840	10,850	10,870	10,880	10,900	10,910	10,930	10,940	10,960	10,970	3
4	14,360	14,380	14,400	14,420	14,440	14,460	14,470	14,490	14,510	14,530	14,550	14,570	14,590	14,610	14,630	14,640	14,660	14,680	14,700	14,720	14,740	4
5	18,170	18,200	18,220	18,250	18,270	18,300	18,320	18,340	18,370	18,390	18,420	18,440	18,470	18,500	18,520	18,550	18,580	18,600	18,630	18,650	18,680	5
6	21,540	21,570	21,600	21,630	21,660	21,690	21,720	21,740	21,770	21,800	21,830	21,860	21,890	21,920	21,950	21,980	22,010	22,030	22,060	22,090	22,120	6
7	25,140	25,180	25,210	25,250	25,280	25,320	25,350	25,390	25,420	25,450	25,490	25,520	25,560	25,590	25,630	25,660	25,690	25,730	25,760	25,800	25,830	7
8	28,520	28,560	28,600	28,640	28,680	28,720	28,760	28,800	28,840	28,880	28,920	28,960	28,990	29,030	29,070	29,110	29,150	29,190	29,230	29,270	29,310	8
9	31,980	32,020	32,070	32,120	32,160	32,210	32,250	32,300	32,340	32,390	32,430	32,480	32,520	32,570	32,610	32,660	32,700	32,750	32,790	32,840	32,880	9
10	35,260	35,310	35,360	35,410	35,460	35,510	35,560	35,610	35,670	35,720	35,770	35,820	35,870	35,920	35,970	36,020	36,070	36,120	36,170	36,220	36,270	10
11	38,430	38,490	38,550	38,610	38,670	38,720	38,780	38,840	38,900	38,950	39,010	39,070	39,130	39,180	39,240	39,300	39,360	39,410	39,470	39,530	39,580	11
12	41,930	41,990	42,060	42,120	42,180	42,240	42,310	42,370	42,430	42,490	42,550	42,620	42,680	42,750	42,810	42,880	42,940	43,000	43,070	43,130	43,190	12
13	45,350	45,420	45,490	45,560	45,630	45,700	45,760	45,830	45,900	45,970	46,040	46,100	46,170	46,230	46,300	46,360	46,430	46,490	46,560	46,620	46,690	13
14	48,720	48,790	48,870	48,940	49,020	49,090	49,170	49,240	49,320	49,390	49,460	49,540	49,610	49,690	49,760	49,830	49,910	49,980	50,060	50,130	50,200	14
15	52,030	52,110	52,190	52,270	52,350	52,430	52,520	52,600	52,680	52,760	52,840	52,920	53,000	53,080	53,160	53,240	53,320	53,400	53,480	53,560	53,640	15
16	55,280	55,370	55,460	55,550	55,640	55,730	55,810	55,900	55,990	56,080	56,160	56,250	56,340	56,420	56,510	56,600	56,680	56,770	56,860	56,940	57,030	16
17	60,290	60,390	60,490	60,590	60,690	60,790	60,890	60,990	61,090	61,190	61,290	61,390	61,480	61,580	61,680	61,780	61,880	61,970	62,070	62,170	62,260	17
18	65,300	65,410	65,520	65,630	65,750	65,860	65,970	66,080	66,190	66,300	66,410	66,520	66,630	66,740	66,850	66,960	67,070	67,180	67,280	67,390	67,500	18
19	70,310	70,430	70,550	70,680	70,800	70,920	71,040	71,170	71,290	71,410	71,530	71,650	71,770	71,900	72,020	72,140	72,260	72,380	72,500	72,620	72,740	19
20	75,130	75,260	75,390	75,520	75,650	75,780	75,910	76,040	76,170	76,290	76,420	76,560	76,690	76,820	76,960	77,090	77,220	77,360	77,490	77,620	77,750	20
21	79,950	80,080	80,220	80,360	80,500	80,630	80,770	80,910	81,040	81,180	81,310	81,460	81,610	81,750	81,900	82,050	82,190	82,340	82,480	82,630	82,770	21
22	84,770	84,910	85,060	85,200	85,350	85,490	85,630	85,780	85,920	86,060	86,200	86,360	86,520	86,680	86,840	87,000	87,160	87,320	87,470	87,630	87,790	22
23	91,970	92,070	92,170	92,270	92,360	92,460	92,550	92,650	92,740	92,830	92,920	93,030	93,150	93,260	93,370	93,480	93,590	93,690	93,800	93,910	94,020	23
24	99,180	99,230	99,280	99,330	99,380	99,430	99,470	99,520	99,560	99,600	99,640	99,700	99,770	99,830	99,890	99,950	100,000	100,100	100,100	100,200	100,200	24
25	106,400	106,400	106,400	106,400	106,400	106,400	106,400	106,400	106,400	106,400	106,400	106,400	106,400	106,400	106,400	106,400	106,400	106,400	106,500	106,500	106,500	25
26	106,800	107,000	107,100	107,300	107,400	107,600	107,700	107,800	108,000	108,100	108,300	108,400	108,600	108,700	108,900	109,000	109,200	109,300	109,500	109,600	109,800	26
27	107,300	107,600	107,900	108,200	108,400	108,700	109,000	109,300	109,600	109,900	110,100	110,400	110,700	111,000	111,300	111,600	111,900	112,200	112,500	112,800	113,100	27
28	107,800	108,200	108,600	109,000	109,500	109,900	110,300	110,800	111,200	111,600	112,000	112,500	112,900	113,300	113,800	114,200	114,600	115,100	115,500	115,900	116,400	28

HEADWATER ELEVATION

GATE ARRANGEMENT	814.0	814.1	814.2	814.3	814.4	814.5	814.6	814.7	814.8	814.9	815.0	815.1	815.2	815.3	815.4	815.5	815.6	815.7	815.8	815.9	816.0	GATE ARRANGEMENT
1	3,190	3,200	3,200	3,210	3,210	3,220	3,220	3,220	3,230	3,230	3,240	3,240	3,250	3,250	3,250	3,260						1
2	6,960	6,970	6,980	6,990	7,000	7,010	7,020	7,020	7,030	7,040	7,050	7,060	7,070	7,080	7,090	7,100	7,110	7,120	7,130	7,140	7,140	2
3	10,970	10,990	11,000	11,020	11,030	11,040	11,060	11,070	11,090	11,100	11,120	11,130	11,150	11,160	11,180	11,190	11,210	11,220	11,230	11,250	11,260	3
4	14,740	14,760	14,780	14,790	14,810	14,830	14,850	14,870	14,890	14,910	14,920	14,940	14,960	14,980	15,000	15,020	15,030	15,050	15,070	15,090	15,110	4
5	18,680	18,710	18,740	18,760	18,790	18,820	18,850	18,880	18,900	18,930	18,960	18,980	19,010	19,030	19,060	19,080	19,110	19,130	19,160	19,180	19,210	5
6	22,120	22,150	22,180	22,210	22,240	22,260	22,290	22,320	22,350	22,380	22,410	22,440	22,460	22,490	22,520	22,550	22,580	22,600	22,630	22,660	22,690	6
7	25,830	25,870	25,900	25,930	25,970	26,000	26,030	26,070	26,100	26,140	26,170	26,200	26,240	26,270	26,300	26,340	26,370	26,400	26,440	26,470	26,500	7
8	29,310	29,350	29,390	29,430	29,470	29,500	29,540	29,580	29,620	29,660	29,700	29,740	29,780	29,810	29,850	29,890	29,930	29,970	30,010	30,040	30,080	8
9	32,880	32,930	32,970	33,010	33,060	33,100	33,150	33,190	33,240	33,280	33,320	33,370	33,410	33,460	33,500	33,540	33,590	33,630	33,670	33,720	33,760	9
10	36,270	36,320	36,370	36,420	36,470	36,520	36,570	36,620	36,660	36,710	36,760	36,810	36,860	36,910	36,960	37,010	37,060	37,110	37,150	37,200	37,250	10
11	39,580	39,640	39,700	39,750	39,810	39,870	39,930	39,980	40,040	40,100	40,150	40,210	40,270	40,330	40,390	40,450	40,500	40,560	40,620	40,680	40,740	11
12	43,190	43,260	43,320	43,380	43,440	43,500	43,570	43,630	43,690	43,750	43,810	43,880	43,940	44,000	44,070	44,130	44,190	44,260	44,320	44,380	44,450	12
13	46,690	46,750	46,820	46,890	46,950	47,020	47,090	47,150	47,220	47,290	47,350	47,430	47,500	47,570	47,650	47,720	47,790	47,870	47,940	48,010	48,090	13
14	50,200	50,280	50,350	50,430	50,510	50,580	50,660	50,730	50,810	50,880	50,960	51,030	51,100	51,170	51,240	51,320	51,390	51,460	51,530	51,600	51,670	14
15	53,640	53,720	53,800	53,880	53,960	54,040	54,110	54,190	54,270	54,350	54,430	54,510	54,590	54,660	54,740	54,820	54,900	54,970	55,050	55,130	55,210	15
16	57,030	57,110	57,200	57,290	57,370	57,460	57,540	57,630	57,710	57,800	57,880	57,970	58,050	58,130	58,220	58,300	58,390	58,470	58,550	58,640	58,720	16
17	62,260	62,360	62,460	62,560	62,650	62,750	62,840	62,940	63,040	63,130	63,230	63,320	63,420	63,510	63,610	63,700	63,800	63,890	63,990	64,080	64,180	17
18	67,500	67,610	67,720	67,820	67,930	68,040	68,150	68,250	68,360	68,470	68,570	68,680	68,790	68,890	69,000	69,100	69,210	69,320	69,420	69,530	69,630	18
19	72,740	72,860	72,980	73,090	73,210	73,330	73,450	73,570	73,690	73,800	73,920	74,040	74,160	74,270	74,390	74,510	74,620	74,740	74,860	74,970	75,090	19
20	77,750	77,890	78,020	78,150	78,280	78,420	78,550	78,680	78,810	78,940	79,070	79,200	79,330	79,460	79,590	79,720	79,850	79,980	80,110	80,240	80,360	20
21	82,770	82,920	83,060	83,210	83,350	83,500	83,640	83,790	83,930	84,080	84,220	84,360	84,510	84,650	84,790	84,930	85,070	85,220	85,360	85,500	85,640	21
22	87,790	87,950	88,110	88,270	88,420	88,580	88,740	88,900	89,050	89,210	89,370	89,520	89,680	89,840	89,990	90,150	90,300	90,460	90,610	90,760	90,920	22
23	94,020	94,140	94,260	94,380	94,510	94,630	94,750	94,870	94,990	95,110	95,220	95,360	95,490	95,620	95,750	95,890	96,020	96,150	96,280	96,410	96,530	23
24	100,200	100,300	100,400	100,500	100,600	100,700	100,800	100,800	100,900	101,000	101,100	101,200	101,300	101,400	101,500	101,600	101,700	101,800	101,900	102,000	102,200	24
25	106,500	106,500	106,600	106,600	106,700	106,700	106,800	106,800	106,900	106,900	106,900	107,000	107,100	107,200	107,300	107,400	107,400	107,500	107,600	107,700	107,800	25
26	109,800	109,900	110,100	110,300	110,500	110,700	110,800	111,000	111,200	111,400	111,600	111,600	111,700	111,700	111,800	111,800	111,900	112,000	112,000	112,100	112,100	26
27	113,100	113,400	113,700	114,000	114,300	114,600	114,900	115,200	115,500	115,800	116,200	116,200	116,200	116,300	116,300	116,300	116,400	116,400	116,400	116,400	116,500	27
28	116,400	116,800	117,200	117,700	118,100	118,500	119,000	119,400	119,900	120,300	120,800	120,800	120,800	120,800	120,800	120,800	120,800	120,800	120,800	120,800	120,800	28

HEADWATER 812 to 816
TAILWATER 776.51 to 777.5

See special instruction for preventing gate overflow on page 2.

MAY 2008

TELLICO DAM
SPILLWAY DISCHARGE
IN CUBIC FEET PER SECOND

HEADWATER ELEVATION

GATE ARRANGEMENT	816.0	816.1	816.2	816.3	816.4	816.5	816.6	816.7	816.8	816.9	817.0	817.1	817.2	817.3	817.4	817.5	817.6	817.7	817.8	817.9	818.0	GATE ARRANGEMENT
1																						1
2	7,140	7,150	7,160																			2
3	11,260	11,280	11,290	11,310	11,320	11,340	11,350	11,360	11,380	11,390	11,410											3
4	15,110	15,130	15,140	15,160	15,180	15,200	15,220	15,230	15,250	15,270	15,290	15,490	15,850	16,310	16,850	17,470	18,160	18,910				4
5	19,210	19,230	19,260	19,280	19,300	19,330	19,350	19,370	19,400	19,420	19,440	19,650	20,010	20,480	21,030	21,650	22,350	23,100	23,920	24,790	25,720	5
6	22,690	22,720	22,740	22,770	22,800	22,830	22,860	22,880	22,910	22,940	22,970	23,180	23,550	24,020	24,570	25,200	25,900	26,660	27,480	28,360	29,290	6
7	26,500	26,540	26,570	26,600	26,640	26,670	26,700	26,730	26,770	26,800	26,830	27,050	27,420	27,900	28,460	29,090	29,790	30,560	31,390	32,270	33,200	7
8	30,080	30,120	30,160	30,200	30,230	30,270	30,310	30,350	30,390	30,420	30,460	30,680	31,060	31,540	32,100	32,740	33,450	34,220	35,050	35,940	36,880	8
9	33,760	33,800	33,850	33,890	33,930	33,980	34,020	34,060	34,110	34,150	34,190	34,420	34,800	35,290	35,860	36,500	37,210	37,990	38,820	39,720	40,660	9
10	37,250	37,300	37,350	37,400	37,440	37,490	37,540	37,590	37,640	37,680	37,730	37,960	38,350	38,840	39,420	40,070	40,780	41,570	42,410	43,300	44,250	10
11	40,740	40,800	40,860	40,910	40,970	41,030	41,090	41,150	41,210	41,270	41,330	41,570	41,970	42,470	43,060	43,720	44,450	45,240	46,100	47,000	47,970	11
12	44,450	44,510	44,580	44,640	44,700	44,770	44,830	44,900	44,960	45,020	45,090	45,330	45,730	46,240	46,830	47,490	48,230	49,020	49,880	50,790	51,750	12
13	48,090	48,160	48,220	48,290	48,360	48,430	48,490	48,560	48,630	48,700	48,760	49,010	49,420	49,930	50,520	51,190	51,920	52,720	53,580	54,490	55,460	13
14	51,670	51,740	51,820	51,890	51,960	52,030	52,100	52,170	52,240	52,310	52,380	52,630	53,040	53,550	54,140	54,810	55,550	56,350	57,210	58,120	59,090	14
15	55,210	55,280	55,360	55,440	55,510	55,590	55,670	55,740	55,820	55,900	55,970	56,230	56,650	57,170	57,770	58,450	59,190	60,000	60,870	61,790	62,770	15
16	58,720	58,800	58,890	58,970	59,050	59,140	59,220	59,300	59,380	59,470	59,550	59,810	60,240	60,760	61,370	62,050	62,800	63,620	64,490	65,420	66,410	16
17	64,180	64,270	64,360	64,460	64,550	64,640	64,740	64,830	64,920	65,020	65,110	65,390	65,820	66,350	66,970	67,670	68,430	69,250	70,140	71,080	72,070	17
18	69,630	69,740	69,840	69,940	70,050	70,150	70,260	70,360	70,460	70,570	70,670	70,960	71,400	71,950	72,580	73,280	74,050	74,890	75,780	76,740	77,740	18
19	75,090	75,200	75,320	75,430	75,550	75,660	75,780	75,890	76,010	76,120	76,230	76,530	76,980	77,540	78,180	78,900	79,680	80,520	81,430	82,390	83,410	19
20	80,360	80,490	80,620	80,750	80,870	81,000	81,130	81,260	81,380	81,510	81,640	81,950	82,410	82,980	83,630	84,360	85,150	86,010	86,930	87,900	88,930	20
21	85,640	85,780	85,920	86,060	86,200	86,340	86,480	86,620	86,760	86,900	87,040	87,360	87,840	88,420	89,080	89,820	90,630	91,500	92,430	93,420	94,460	21
22	90,920	91,070	91,220	91,380	91,530	91,680	91,830	91,990	92,140	92,290	92,440	92,770	93,260	93,860	94,530	95,290	96,110	96,990	97,930	98,930	99,980	22
23	96,530	96,680	96,820	96,960	97,090	97,230	97,370	97,510	97,650	97,780	97,920	98,250	98,730	99,320	99,990	100,700	101,500	102,400	103,400	104,300	105,400	23
24	102,200	102,300	102,400	102,500	102,700	102,800	102,900	103,000	103,200	103,300	103,400	103,700	104,200	104,800	105,400	106,200	107,000	107,900	108,800	109,800	110,800	24
25	107,800	107,900	108,000	108,100	108,200	108,300	108,400	108,600	108,700	108,800	108,900	109,200	109,700	110,200	110,900	111,600	112,400	113,300	114,200	115,200	116,200	25
26	112,100	112,200	112,300	112,400	112,400	112,500	112,600	112,700	112,700	112,800	112,900	113,200	113,600	114,100	114,800	115,500	116,200	117,000	117,900	118,900	119,800	26
27	116,500	116,500	116,600	116,600	116,700	116,700	116,700	116,800	116,800	116,900	116,900	117,200	117,500	118,000	118,600	119,300	120,000	120,800	121,600	122,500	123,500	27
28	120,800	120,800	120,900	120,900	120,900	120,900	120,900	120,900	120,900	120,900	120,900	121,100	121,500	121,900	122,500	123,100	123,800	124,500	125,300	126,200	127,100	28

HEADWATER ELEVATION

GATE ARRANGEMENT	818.0	818.1	818.2	818.3	818.4	818.5	818.6	818.7	818.8	818.9	819.0	819.1	819.2	819.3	819.4	819.5	819.6	819.7	819.8	819.9	820.0	GATE ARRANGEMENT
1																						1
2																						2
3																						3
4																						4
5	25,720	26,690	27,720	28,800	29,930																	5
6	29,290	30,270	31,300	32,380	33,510	34,690	35,910	37,170	38,480	39,830	41,220	42,650										6
7	33,200	34,190	35,230	36,310	37,450	38,630	39,850	41,120	42,430	43,790	45,190	46,620	48,100	49,620	51,180	52,780	54,410	56,090	57,800			7
8	36,880	37,870	38,910	40,010	41,140	42,330	43,560	44,830	46,150	47,510	48,910	50,350	51,840	53,360	54,920	56,530	58,170	59,840	61,560	63,310	65,100	8
9	40,660	41,660	42,710	43,800	44,950	46,130	47,370	48,650	49,970	51,340	52,740	54,190	55,680	57,210	58,780	60,380	62,030	63,710	65,430	67,190	68,980	9
10	44,250	45,250	46,310	47,410	48,560	49,750	50,990	52,280	53,600	54,970	56,380	57,840	59,330	60,860	62,440	64,050	65,700	67,390	69,110	70,880	72,670	10
11	47,970	48,990	50,060	51,180	52,350	53,560	54,820	56,120	57,470	58,860	60,290	61,760	63,270	64,810	66,400	68,030	69,690	71,400	73,140	74,910	76,730	11
12	51,750	52,780	53,850	54,970	56,140	57,360	58,620	59,930	61,280	62,670	64,100	65,580	67,100	68,650	70,250	71,880	73,560	75,270	77,020	78,810	80,630	12
13	55,460	56,490	57,560	58,690	59,860	61,080	62,350	63,650	65,010	66,400	67,840	69,310	70,830	72,390	73,990	75,630	77,300	79,020	80,770	82,560	84,380	13
14	59,090	60,120	61,200	62,320	63,500	64,720	65,980	67,290	68,640	70,040	71,470	72,950	74,460	76,020	77,610	79,240	80,920	82,620	84,370	86,160	87,980	14
15	62,770	63,800	64,880	66,010	67,190	68,410	69,680	70,990	72,340	73,740	75,180	76,660	78,180	79,740	81,340	82,980	84,660	86,370	88,130	89,920	91,740	15
16	66,410	67,440	68,530	69,660	70,850	72,070	73,350	74,670	76,030	77,430	78,870	80,360	81,890	83,450	85,060	86,700	88,390	90,110	91,870	93,660	95,500	16
17	72,070	73,120	74,220	75,360	76,550	77,790	79,080	80,400	81,780	83,190	84,640	86,140	87,680	89,250	90,870	92,520	94,220	95,950	97,720	99,520	101,400	17
18	77,740	78,800	79,900	81,060	82,260	83,510	84,810	86,140	87,520	88,950	90,410	91,920	93,470	95,050	96,680	98,340	100,000	101,800	103,600	105,400	107,200	18
19	83,410	84,470	85,590	86,760	87,970	89,230	90,530	91,880	93,270	94,710	96,180	97,700	99,260	100,900	102,500	104,200	105,900	107,600	109,400	111,200	113,100	19
20	88,930	90,010	91,140	92,320	93,540	94,810	96,130	97,490	98,890	100,300	101,800	103,400	104,900	106,500	108,200	109,900	111,600	113,400	115,200	117,000	118,900	20
21	94,460	95,550	96,690	97,880	99,110	100,400	101,700	103,100	104,500	106,000	107,500	109,000	110,600	112,200	113,900	115,600	117,300	119,100	120,900	122,700	124,600	21
22	99,980	101,100	102,200	103,400	104,700	106,000	107,300	108,700	110,100	111,600	113,100	114,700	116,300	117,900	119,600	121,300	123,000	124,800	126,600	128,500	130,400	22
23	105,400	106,500	107,600	108,800	110,100	111,400	112,700	114,100	115,500	117,000	118,500	120,100	121,600	123,300	124,900	126,700	128,400	130,200	132,000	133,900	135,800	23
24	110,800	111,900	113,000	114,200	115,500	116,800	118,100	119,500	120,900	122,400	123,900	125,400	127,000	128,700	130,300	132,000	133,800	135,600	137,400	139,300	141,200	24
25	116,200	117,300	118,500	119,700	120,900	122,200	123,500	124,900	126,300	127,800	129,300	130,800	132,400	134,000	135,700	137,400	139,200	141,000	142,800	144,600	146,500	25
26	119,800	121,000	122,100	123,400	124,600	125,900	127,300	128,700	130,100	131,600	133,100	134,700	136,300	138,000	139,700	141,400	143,200	145,000	146,800	148,700	150,600	26
27	123,500	124,600	125,800	127,100	128,300	129,700	131,100	132,500	133,900	135,400	137,000	138,600	140,200	141,900	143,600	145,300	147,100	149,000	150,800	152,700	154,700	27
28	127,100	128,300	129,500	130,800	132,100	133,400	134,800	136,300	137,800	139,300	140,900	142,500	144,100	145,800	147,500	149,300	151,100	153,000	154,800	156,800	158,700	28

MAY 2008

See special instruction for preventing gate overflow on page 2.

HEADWATER 816 to 820
TAILWATER 776.51 to 777.5

TELLICO DAM
SPILLWAY DISCHARGE
IN CUBIC FEET PER SECOND

HEADWATER ELEVATION

GATE ARRANGEMENT	800.0	800.1	800.2	800.3	800.4	800.5	800.6	800.7	800.8	800.9	801.0	801.1	801.2	801.3	801.4	801.5	801.6	801.7	801.8	801.9	802.0	GATE ARRANGEMENT
1	2,450	2,460	2,460	2,470	2,480	2,480	2,490	2,490	2,500	2,500	2,510	2,510	2,520	2,520	2,530	2,540	2,540	2,550	2,550	2,560	2,560	1
2	5,350	5,360	5,370	5,380	5,390	5,410	5,420	5,430	5,440	5,450	5,470	5,480	5,490	5,500	5,510	5,530	5,540	5,550	5,560	5,570	5,580	2
3	8,320	8,340	8,360	8,380	8,400	8,420	8,430	8,450	8,470	8,490	8,510	8,530	8,550	8,560	8,580	8,600	8,620	8,640	8,660	8,670	8,690	3
4	11,560	11,590	11,620	11,650	11,670	11,700	11,730	11,760	11,790	11,810	11,840	11,870	11,890	11,920	11,950	11,970	12,000	12,030	12,050	12,080	12,100	4
5	14,760	14,790	14,820	14,860	14,890	14,920	14,950	14,990	15,020	15,050	15,090	15,120	15,150	15,180	15,210	15,240	15,270	15,300	15,330	15,360	15,390	5
6	17,640	17,680	17,710	17,750	17,790	17,820	17,860	17,890	17,930	17,960	18,000	18,030	18,070	18,100	18,140	18,180	18,210	18,240	18,280	18,310	18,350	6
7	20,520	20,560	20,610	20,650	20,690	20,730	20,780	20,820	20,860	20,900	20,940	20,990	21,030	21,070	21,110	21,150	21,200	21,240	21,280	21,320	21,360	7
8	23,190	23,240	23,290	23,340	23,390	23,440	23,480	23,530	23,580	23,630	23,680	23,730	23,780	23,820	23,870	23,920	23,970	24,020	24,060	24,110	24,160	8
9	25,900	25,960	26,020	26,070	26,130	26,190	26,240	26,300	26,350	26,410	26,460	26,520	26,580	26,630	26,690	26,740	26,790	26,850	26,900	26,960	27,010	9
10	28,450	28,510	28,570	28,640	28,700	28,760	28,820	28,890	28,950	29,010	29,080	29,140	29,200	29,260	29,320	29,380	29,450	29,510	29,570	29,630	29,690	10
11	30,830	30,900	30,970	31,040	31,110	31,180	31,250	31,320	31,390	31,460	31,530	31,600	31,670	31,740	31,810	31,880	31,940	32,010	32,080	32,150	32,220	11
12	33,560	33,630	33,700	33,780	33,850	33,920	34,000	34,070	34,140	34,220	34,290	34,360	34,440	34,520	34,590	34,670	34,750	34,820	34,900	34,970	35,050	12
13	36,170	36,250	36,330	36,420	36,500	36,580	36,660	36,740	36,820	36,890	36,970	37,060	37,140	37,230	37,310	37,390	37,480	37,560	37,640	37,720	37,810	13
14	38,690	38,780	38,870	38,960	39,050	39,140	39,230	39,320	39,400	39,490	39,580	39,670	39,760	39,850	39,940	40,030	40,120	40,210	40,300	40,390	40,480	14
15	41,120	41,220	41,320	41,420	41,520	41,610	41,710	41,810	41,910	42,000	42,100	42,200	42,300	42,400	42,490	42,590	42,690	42,790	42,880	42,980	43,070	15
16	43,470	43,580	43,680	43,790	43,900	44,010	44,110	44,220	44,320	44,430	44,540	44,640	44,750	44,860	44,960	45,070	45,170	45,280	45,380	45,490	45,590	16
17	47,400	47,520	47,630	47,750	47,860	47,980	48,090	48,200	48,320	48,430	48,540	48,650	48,760	48,870	48,980	49,090	49,200	49,310	49,420	49,530	49,640	17
18	51,340	51,460	51,590	51,710	51,830	51,950	52,070	52,190	52,310	52,430	52,550	52,660	52,780	52,890	53,010	53,120	53,230	53,350	53,460	53,570	53,680	18
19	55,270	55,410	55,540	55,670	55,800	55,920	56,050	56,180	56,300	56,430	56,550	56,670	56,790	56,910	57,030	57,150	57,260	57,380	57,500	57,610	57,720	19
20	56,950	57,160	57,370	57,570	57,780	57,990	58,190	58,400	58,600	58,810	59,010	59,220	59,420	59,620	59,830	60,030	60,230	60,430	60,630	60,830	61,030	20
21	58,620	58,910	59,190	59,480	59,760	60,050	60,340	60,620	60,910	61,190	61,480	61,760	62,050	62,340	62,620	62,910	63,190	63,480	63,770	64,050	64,340	21
22	60,300	60,660	61,020	61,390	61,750	62,110	62,480	62,840	63,210	63,580	63,940	64,310	64,680	65,050	65,420	65,790	66,160	66,530	66,900	67,280	67,650	22
23	60,300	60,660	61,020	61,390	61,750	62,110	62,480	62,840	63,210	63,580	63,940	64,310	64,680	65,050	65,420	65,790	66,160	66,530	66,900	67,280	67,650	23
24	60,300	60,660	61,020	61,390	61,750	62,110	62,480	62,840	63,210	63,580	63,940	64,310	64,680	65,050	65,420	65,790	66,160	66,530	66,900	67,280	67,650	24
25	60,300	60,660	61,020	61,390	61,750	62,110	62,480	62,840	63,210	63,580	63,940	64,310	64,680	65,050	65,420	65,790	66,160	66,530	66,900	67,280	67,650	25
26	60,300	60,660	61,020	61,390	61,750	62,110	62,480	62,840	63,210	63,580	63,940	64,310	64,680	65,050	65,420	65,790	66,160	66,530	66,900	67,280	67,650	26
27	60,300	60,660	61,020	61,390	61,750	62,110	62,480	62,840	63,210	63,580	63,940	64,310	64,680	65,050	65,420	65,790	66,160	66,530	66,900	67,280	67,650	27
28	60,300	60,660	61,020	61,390	61,750	62,110	62,480	62,840	63,210	63,580	63,940	64,310	64,680	65,050	65,420	65,790	66,160	66,530	66,900	67,280	67,650	28

HEADWATER ELEVATION

GATE ARRANGEMENT	802.0	802.1	802.2	802.3	802.4	802.5	802.6	802.7	802.8	802.9	803.0	803.1	803.2	803.3	803.4	803.5	803.6	803.7	803.8	803.9	804.0	GATE ARRANGEMENT
1	2,560	2,570	2,570	2,580	2,580	2,590	2,590	2,600	2,600	2,610	2,620	2,620	2,630	2,630	2,640	2,640	2,650	2,650	2,660	2,660	2,670	1
2	5,580	5,600	5,610	5,620	5,630	5,640	5,650	5,670	5,680	5,690	5,700	5,710	5,720	5,730	5,740	5,760	5,770	5,780	5,790	5,800	5,810	2
3	8,690	8,710	8,730	8,750	8,760	8,780	8,800	8,820	8,840	8,850	8,870	8,890	8,910	8,920	8,940	8,960	8,980	8,990	9,010	9,030	9,050	3
4	12,100	12,130	12,160	12,180	12,210	12,230	12,260	12,280	12,310	12,330	12,360	12,380	12,400	12,430	12,450	12,470	12,490	12,520	12,540	12,560	12,580	4
5	15,390	15,420	15,450	15,480	15,510	15,540	15,570	15,600	15,630	15,660	15,690	15,720	15,750	15,780	15,810	15,840	15,870	15,900	15,930	15,960	15,990	5
6	18,350	18,380	18,420	18,450	18,490	18,520	18,560	18,590	18,620	18,660	18,690	18,730	18,760	18,790	18,830	18,860	18,900	18,930	18,960	19,000	19,030	6
7	21,360	21,400	21,440	21,480	21,520	21,570	21,610	21,650	21,690	21,730	21,770	21,810	21,850	21,890	21,930	21,970	22,010	22,050	22,090	22,130	22,170	7
8	24,160	24,210	24,250	24,300	24,350	24,400	24,440	24,490	24,540	24,580	24,630	24,680	24,720	24,770	24,820	24,860	24,910	24,950	25,000	25,050	25,090	8
9	27,010	27,070	27,120	27,180	27,230	27,280	27,340	27,390	27,440	27,500	27,550	27,600	27,660	27,710	27,760	27,810	27,870	27,920	27,970	28,020	28,080	9
10	29,690	29,750	29,810	29,870	29,930	29,990	30,050	30,110	30,170	30,230	30,290	30,350	30,410	30,470	30,530	30,590	30,650	30,710	30,770	30,830	30,890	10
11	32,220	32,280	32,350	32,420	32,480	32,550	32,620	32,690	32,750	32,820	32,880	32,950	33,020	33,080	33,150	33,210	33,280	33,340	33,410	33,480	33,540	11
12	35,050	35,120	35,200	35,270	35,350	35,420	35,500	35,570	35,650	35,720	35,790	35,870	35,940	36,010	36,080	36,160	36,230	36,300	36,370	36,440	36,510	12
13	37,810	37,890	37,970	38,050	38,130	38,210	38,290	38,380	38,460	38,540	38,620	38,700	38,780	38,860	38,940	39,020	39,100	39,180	39,260	39,340	39,420	13
14	40,480	40,570	40,660	40,750	40,840	40,930	41,020	41,110	41,200	41,280	41,370	41,460	41,550	41,640	41,720	41,810	41,900	41,980	42,070	42,160	42,240	14
15	43,070	43,170	43,270	43,370	43,460	43,560	43,650	43,750	43,840	43,940	44,040	44,130	44,230	44,330	44,420	44,520	44,610	44,710	44,810	44,900	45,000	15
16	45,590	45,700	45,800	45,910	46,010	46,110	46,220	46,320	46,420	46,530	46,630	46,730	46,840	46,940	47,040	47,150	47,250	47,350	47,450	47,560	47,660	16
17	49,640	49,750	49,850	49,960	50,070	50,180	50,280	50,390	50,490	50,600	50,700	50,810	50,910	51,020	51,120	51,230	51,330	51,440	51,540	51,640	51,740	17
18	53,680	53,790	53,900	54,020	54,130	54,240	54,350	54,450	54,560	54,670	54,780	54,890	54,990	55,100	55,200	55,310	55,410	55,520	55,620	55,730	55,830	18
19	57,720	57,840	57,960	58,070	58,180	58,300	58,410	58,520	58,630	58,740	58,850	58,960	59,070	59,180	59,290	59,390	59,500	59,600	59,710	59,810	59,910	19
20	61,030	61,230	61,440	61,640	61,840	62,040	62,240	62,440	62,640	62,840	63,040	63,240	63,440	63,640	63,840	64,040	64,230	64,430	64,630	64,810	64,950	20
21	64,340	64,630	64,920	65,210	65,500	65,780	66,070	66,360	66,650	66,940	67,230	67,520	67,810	68,100	68,390	68,680	68,970	69,260	69,550	69,800	69,980	21
22	67,650	68,020	68,400	68,770	69,150	69,530	69,900	70,280	70,660	71,040	71,420	71,800	72,180	72,560	72,940	73,330	73,710	74,090	74,480	74,790	75,020	22
23	67,650	68,020	68,400	68,770	69,150	69,530	69,900	70,280	70,660	71,040	71,420	71,800	72,180	72,560	72,940	73,330	73,710	74,090	74,480	74,820	75,090	23
24	67,650	68,020	68,400	68,770	69,150	69,530	69,900	70,280	70,660	71,040	71,420	71,800	72,180	72,560	72,940	73,330	73,710	74,090	74,480	74,840	75,170	24
25	67,650	68,020	68,400	68,770	69,150	69,530	69,900	70,280	70,660	71,040	71,420	71,800	72,180	72,560	72,940	73,330	73,710	74,090	74,480	74,860	75,250	25
26	67,650	68,020	68,400	68,770	69,150	69,530	69,900	70,280	70,660	71,040	71,420	71,800	72,180	72,560	72,940	73,330	73,710	74,090	74,480	74,860	75,250	26
27	67,650	68,020	68,400	68,770	69,150	69,530	69,900	70,280	70,660	71,040	71,420	71,800	72,180	72,560	72,940	73,330	73,710	74,090	74,480	74,860	75,250	27
28	67,650	68,020	68,400	68,770	69,150	69,530	69,900	70,280	70,660	71,040	71,420	71,800	72,180	72,560	72,940	73,330	73,710	74,090	74,480	74,860	75,250	28

HEADWATER 800 to 804
TAILWATER 777.51 to 778.5

MAY 2008

TELLICO DAM
SPILLWAY DISCHARGE
IN CUBIC FEET PER SECOND

GATE ARRANGEMENT	HEADWATER ELEVATION																				GATE ARRANGEMENT
	804.0	804.1	804.2	804.3	804.4	804.5	804.6	804.7	804.8	804.9	805.0	805.1	805.2	805.3	805.4	805.5	805.6	805.7	805.8	805.9	806.0	
1	2,670	2,670	2,680	2,680	2,690	2,690	2,700	2,700	2,710	2,710	2,720	2,720	2,730	2,730	2,740	2,740	2,750	2,750	2,760	2,760	2,770	1
2	5,810	5,820	5,830	5,850	5,860	5,870	5,880	5,890	5,900	5,910	5,920	5,930	5,940	5,960	5,970	5,980	5,990	6,000	6,010	6,020	6,030	2
3	9,050	9,060	9,080	9,100	9,120	9,130	9,150	9,170	9,180	9,200	9,220	9,240	9,250	9,270	9,290	9,300	9,320	9,340	9,350	9,370	9,390	3
4	12,580	12,610	12,640	12,660	12,690	12,720	12,740	12,770	12,800	12,830	12,850	12,880	12,900	12,920	12,950	12,970	13,000	13,020	13,040	13,070	13,090	4
5	15,990	16,020	16,050	16,080	16,110	16,140	16,170	16,200	16,230	16,250	16,280	16,310	16,340	16,370	16,400	16,430	16,460	16,490	16,520	16,540	16,570	5
6	19,030	19,060	19,100	19,130	19,160	19,200	19,230	19,260	19,300	19,330	19,360	19,390	19,430	19,460	19,490	19,530	19,560	19,590	19,620	19,650	19,690	6
7	22,170	22,210	22,250	22,290	22,330	22,370	22,410	22,440	22,480	22,520	22,560	22,600	22,640	22,680	22,720	22,760	22,790	22,830	22,870	22,910	22,950	7
8	25,090	25,140	25,180	25,230	25,270	25,320	25,360	25,410	25,450	25,500	25,540	25,590	25,630	25,680	25,720	25,770	25,810	25,860	25,900	25,950	25,990	8
9	28,080	28,130	28,180	28,230	28,280	28,340	28,390	28,440	28,490	28,540	28,590	28,650	28,700	28,750	28,800	28,850	28,900	28,950	29,000	29,050	29,100	9
10	30,890	30,940	31,000	31,060	31,120	31,180	31,230	31,290	31,350	31,410	31,470	31,520	31,580	31,640	31,690	31,750	31,810	31,870	31,920	31,980	32,030	10
11	33,540	33,610	33,670	33,730	33,800	33,860	33,930	33,990	34,060	34,120	34,180	34,250	34,310	34,370	34,440	34,500	34,560	34,630	34,690	34,750	34,810	11
12	36,510	36,590	36,660	36,730	36,800	36,870	36,940	37,010	37,090	37,160	37,230	37,300	37,370	37,440	37,510	37,580	37,650	37,720	37,790	37,860	37,930	12
13	39,420	39,500	39,580	39,660	39,730	39,810	39,890	39,970	40,040	40,120	40,200	40,280	40,350	40,430	40,510	40,590	40,660	40,740	40,820	40,890	40,970	13
14	42,240	42,330	42,420	42,500	42,590	42,680	42,760	42,850	42,930	43,020	43,110	43,190	43,280	43,360	43,450	43,530	43,620	43,700	43,780	43,870	43,950	14
15	45,000	45,090	45,180	45,280	45,370	45,460	45,560	45,650	45,740	45,830	45,930	46,020	46,110	46,200	46,300	46,390	46,480	46,570	46,660	46,760	46,850	15
16	47,660	47,760	47,860	47,970	48,070	48,170	48,270	48,380	48,480	48,580	48,680	48,780	48,880	48,980	49,080	49,180	49,280	49,380	49,480	49,580	49,680	16
17	51,740	51,850	51,960	52,070	52,180	52,290	52,400	52,500	52,610	52,720	52,820	52,940	53,050	53,160	53,270	53,380	53,490	53,600	53,710	53,820	53,930	17
18	55,830	55,940	56,060	56,170	56,290	56,400	56,520	56,630	56,740	56,860	56,970	57,090	57,210	57,340	57,460	57,580	57,700	57,820	57,940	58,060	58,180	18
19	59,910	60,040	60,160	60,280	60,400	60,520	60,640	60,760	60,880	61,000	61,110	61,250	61,380	61,510	61,650	61,780	61,910	62,040	62,170	62,300	62,430	19
20	64,950	65,100	65,260	65,410	65,570	65,720	65,870	66,020	66,170	66,330	66,480	66,640	66,800	66,960	67,110	67,270	67,430	67,590	67,750	67,900	68,060	20
21	69,980	70,170	70,360	70,550	70,730	70,920	71,100	71,290	71,470	71,660	71,840	72,030	72,210	72,400	72,580	72,770	72,950	73,140	73,320	73,500	73,690	21
22	75,020	75,240	75,460	75,680	75,900	76,120	76,340	76,550	76,770	76,990	77,200	77,410	77,630	77,840	78,050	78,260	78,470	78,690	78,890	79,100	79,310	22
23	75,090	75,370	75,650	75,920	76,200	76,470	76,750	77,020	77,300	77,570	77,840	78,120	78,390	78,660	78,930	79,210	79,480	79,750	80,020	80,290	80,560	23
24	75,170	75,500	75,830	76,160	76,490	76,830	77,160	77,490	77,820	78,150	78,490	78,820	79,150	79,480	79,820	80,150	80,480	80,810	81,150	81,480	81,810	24
25	75,250	75,630	76,020	76,400	76,790	77,180	77,570	77,960	78,350	78,740	79,130	79,520	79,910	80,300	80,700	81,090	81,480	81,880	82,270	82,670	83,060	25
26	75,250	75,630	76,020	76,400	76,790	77,180	77,570	77,960	78,350	78,740	79,130	79,520	79,910	80,300	80,700	81,090	81,480	81,880	82,270	82,670	83,060	26
27	75,250	75,630	76,020	76,400	76,790	77,180	77,570	77,960	78,350	78,740	79,130	79,520	79,910	80,300	80,700	81,090	81,480	81,880	82,270	82,670	83,060	27
28	75,250	75,630	76,020	76,400	76,790	77,180	77,570	77,960	78,350	78,740	79,130	79,520	79,910	80,300	80,700	81,090	81,480	81,880	82,270	82,670	83,060	28

GATE ARRANGEMENT	HEADWATER ELEVATION																				GATE ARRANGEMENT
	806.0	806.1	806.2	806.3	806.4	806.5	806.6	806.7	806.8	806.9	807.0	807.1	807.2	807.3	807.4	807.5	807.6	807.7	807.8	807.9	808.0	
1	2,770	2,770	2,780	2,780	2,790	2,790	2,800	2,800	2,810	2,810	2,820	2,820	2,830	2,830	2,840	2,840	2,850	2,850	2,860	2,860	2,860	1
2	6,030	6,040	6,050	6,060	6,070	6,090	6,100	6,110	6,120	6,130	6,140	6,150	6,160	6,170	6,180	6,190	6,200	6,210	6,220	6,230	6,240	2
3	9,390	9,400	9,420	9,440	9,450	9,470	9,490	9,500	9,520	9,540	9,550	9,570	9,590	9,600	9,620	9,640	9,650	9,670	9,680	9,700	9,720	3
4	13,090	13,120	13,140	13,160	13,190	13,210	13,230	13,260	13,280	13,310	13,330	13,350	13,370	13,400	13,420	13,440	13,460	13,490	13,510	13,530	13,550	4
5	16,570	16,600	16,630	16,670	16,700	16,730	16,760	16,790	16,820	16,850	16,880	16,910	16,930	16,960	16,980	17,010	17,040	17,060	17,090	17,120	17,140	5
6	19,690	19,720	19,750	19,780	19,820	19,850	19,880	19,910	19,940	19,980	20,010	20,040	20,070	20,100	20,130	20,170	20,200	20,230	20,260	20,290	20,320	6
7	22,950	22,990	23,020	23,060	23,100	23,140	23,180	23,210	23,250	23,290	23,330	23,370	23,400	23,440	23,480	23,520	23,550	23,590	23,630	23,660	23,700	7
8	25,990	26,030	26,080	26,120	26,170	26,210	26,250	26,300	26,340	26,380	26,430	26,470	26,510	26,560	26,600	26,640	26,690	26,730	26,770	26,820	26,860	8
9	29,100	29,150	29,200	29,250	29,300	29,350	29,400	29,450	29,500	29,550	29,600	29,650	29,700	29,750	29,800	29,850	29,900	29,950	29,990	30,040	30,090	9
10	32,030	32,090	32,150	32,200	32,260	32,320	32,370	32,430	32,480	32,540	32,590	32,650	32,710	32,760	32,820	32,870	32,930	32,980	33,040	33,090	33,140	10
11	34,810	34,880	34,940	35,000	35,060	35,120	35,190	35,250	35,310	35,370	35,430	35,490	35,560	35,620	35,680	35,740	35,800	35,860	35,920	35,980	36,040	11
12	37,930	38,000	38,070	38,140	38,210	38,270	38,340	38,410	38,480	38,550	38,620	38,680	38,750	38,820	38,890	38,960	39,020	39,090	39,160	39,230	39,290	12
13	40,970	41,050	41,120	41,200	41,280	41,350	41,430	41,500	41,580	41,650	41,730	41,800	41,880	41,950	42,030	42,100	42,180	42,250	42,330	42,400	42,470	13
14	43,950	44,040	44,120	44,200	44,290	44,370	44,450	44,530	44,620	44,700	44,780	44,860	44,950	45,030	45,110	45,190	45,270	45,350	45,430	45,520	45,600	14
15	46,850	46,940	47,030	47,120	47,210	47,300	47,390	47,480	47,570	47,660	47,750	47,840	47,930	48,020	48,110	48,200	48,280	48,370	48,460	48,550	48,640	15
16	49,680	49,780	49,880	49,970	50,070	50,170	50,270	50,370	50,460	50,560	50,660	50,750	50,850	50,950	51,040	51,140	51,230	51,330	51,430	51,520	51,620	16
17	53,930	54,040	54,150	54,270	54,380	54,490	54,600	54,710	54,820	54,930	55,040	55,150	55,260	55,370	55,480	55,590	55,700	55,810	55,910	56,020	56,130	17
18	58,180	58,310	58,430	58,560	58,680	58,800	58,930	59,050	59,180	59,300	59,420	59,540	59,670	59,790	59,910	60,040	60,160	60,280	60,400	60,520	60,640	18
19	62,430	62,570	62,710	62,850	62,990	63,120	63,260	63,400	63,530	63,670	63,800	63,940	64,080	64,210	64,350	64,480	64,620	64,760	64,890	65,020	65,160	19
20	68,060	68,190	68,320	68,450	68,570	68,700	68,830	68,950	69,080	69,200	69,330	69,450	69,570	69,690	69,810	69,930	70,050	70,170	70,290	70,410	70,530	20
21	73,690	73,810	73,920	74,040	74,160	74,280	74,390	74,510	74,620	74,740	74,850	74,960	75,060	75,170	75,280	75,380	75,490	75,590	75,690	75,790	75,900	21
22	79,310	79,420	79,530	79,640	79,750	79,860	79,960	80,070	80,170	80,270	80,370	80,470	80,560	80,650	80,740	80,830	80,920	81,010	81,090	81,180	81,260	22
23	80,560	80,770	80,970	81,180	81,380	81,590	81,790	81,990	82,200	82,400	82,600	82,800	82,990	83,190	83,380	83,580	83,770	83,960	84,160	84,350	84,540	23
24	81,810	82,110	82,420	82,720	83,020	83,320	83,620	83,920	84,220	84,520	84,830	85,130	85,420	85,720	86,020	86,320	86,620	86,920	87,220	87,520	87,820	24
25	83,060	83,460	83,860	84,260	84,650	85,050	85,450	85,850	86,250	86,650	87,050	87,450	87,860	88,260	88,660	89,070	89,470	89,870	90,280	90,690	91,090	25
26	83,060	83,460	83,860	84,260	84,650	85,050	85,450	85,850	86,250	86,650	87,050	87,450	87,860	88,260	88,660	89,070	89,470	89,870	90,280	90,690	91,090	26
27	83,060	83,460	83,860	84,260	84,650	85,050	85,450	85,850	86,250	86,650	87,050	87,450	87,860	88,260	88,660	89,070	89,470	89,870	90,280	90,690	91,090	27
28	83,060	83,460	83,860	84,260	84,650	85,050	85,450	85,850	86,250	86,650	87,050	87,450	87,860	88,260	88,660	89,070	89,470	89,870	90,280	90,690	91,090	28

MAY 2008

HEADWATER 804 to 808
TAILWATER 777.51 to 778.5

TELLICO DAM
SPILLWAY DISCHARGE
IN CUBIC FEET PER SECOND

HEADWATER ELEVATION

GATE ARRANGEMENT	808.0	808.1	808.2	808.3	808.4	808.5	808.6	808.7	808.8	808.9	809.0	809.1	809.2	809.3	809.4	809.5	809.6	809.7	809.8	809.9	810.0	GATE ARRANGEMENT
1	2,860	2,870	2,870	2,880	2,880	2,890	2,890	2,900	2,900	2,910	2,910	2,920	2,920	2,930	2,930	2,940	2,940	2,940	2,950	2,950	2,960	1
2	6,240	6,250	6,260	6,270	6,280	6,300	6,310	6,320	6,330	6,340	6,350	6,360	6,370	6,380	6,390	6,400	6,410	6,420	6,430	6,440	6,450	2
3	9,720	9,730	9,750	9,770	9,780	9,800	9,810	9,830	9,850	9,860	9,880	9,890	9,910	9,930	9,940	9,960	9,970	9,990	10,000	10,020	10,040	3
4	13,550	13,580	13,600	13,620	13,640	13,660	13,690	13,710	13,730	13,750	13,770	13,790	13,810	13,830	13,850	13,870	13,890	13,910	13,930	13,950	13,970	4
5	17,140	17,170	17,200	17,230	17,250	17,280	17,310	17,340	17,360	17,390	17,420	17,450	17,470	17,500	17,520	17,550	17,570	17,600	17,620	17,650	17,670	5
6	20,320	20,350	20,390	20,420	20,450	20,480	20,510	20,540	20,570	20,600	20,630	20,660	20,700	20,730	20,760	20,790	20,820	20,850	20,880	20,910	20,940	6
7	23,700	23,740	23,780	23,810	23,850	23,890	23,920	23,960	24,000	24,030	24,070	24,110	24,140	24,180	24,220	24,250	24,290	24,320	24,360	24,400	24,430	7
8	26,860	26,900	26,940	26,990	27,030	27,070	27,110	27,160	27,200	27,240	27,280	27,320	27,370	27,410	27,450	27,490	27,530	27,580	27,620	27,660	27,700	8
9	30,090	30,140	30,190	30,240	30,290	30,330	30,380	30,430	30,480	30,530	30,570	30,620	30,670	30,720	30,770	30,810	30,860	30,910	30,960	31,000	31,050	9
10	33,140	33,200	33,250	33,310	33,360	33,420	33,470	33,520	33,580	33,630	33,690	33,740	33,790	33,850	33,900	33,950	34,010	34,060	34,110	34,160	34,220	10
11	36,040	36,100	36,160	36,220	36,280	36,340	36,400	36,460	36,520	36,580	36,640	36,700	36,760	36,820	36,880	36,940	37,000	37,060	37,120	37,180	37,240	11
12	39,290	39,360	39,430	39,490	39,560	39,630	39,690	39,760	39,820	39,890	39,960	40,020	40,090	40,150	40,220	40,280	40,350	40,410	40,480	40,540	40,610	12
13	42,470	42,550	42,620	42,690	42,770	42,840	42,910	42,990	43,060	43,130	43,200	43,280	43,350	43,420	43,490	43,570	43,640	43,710	43,780	43,850	43,920	13
14	45,600	45,680	45,760	45,840	45,920	46,000	46,080	46,160	46,240	46,320	46,400	46,480	46,550	46,630	46,710	46,790	46,870	46,950	47,030	47,100	47,180	14
15	48,640	48,720	48,810	48,900	48,990	49,070	49,160	49,250	49,330	49,420	49,510	49,590	49,680	49,760	49,850	49,940	50,020	50,110	50,190	50,280	50,360	15
16	51,620	51,710	51,810	51,900	52,000	52,090	52,180	52,280	52,370	52,460	52,560	52,650	52,740	52,840	52,930	53,020	53,110	53,210	53,300	53,390	53,480	16
17	56,130	56,240	56,350	56,450	56,560	56,670	56,770	56,880	56,990	57,090	57,200	57,310	57,410	57,520	57,620	57,730	57,830	57,940	58,040	58,150	58,250	17
18	60,640	60,770	60,890	61,010	61,130	61,250	61,370	61,490	61,600	61,720	61,840	61,960	62,080	62,200	62,310	62,430	62,550	62,670	62,780	62,900	63,020	18
19	65,160	65,290	65,430	65,560	65,690	65,830	65,960	66,090	66,220	66,350	66,480	66,620	66,750	66,880	67,010	67,140	67,270	67,400	67,530	67,650	67,780	19
20	70,530	70,650	70,760	70,880	71,000	71,110	71,230	71,350	71,460	71,570	71,690	71,800	71,910	72,020	72,130	72,240	72,340	72,450	72,560	72,670	72,770	20
21	75,900	76,000	76,100	76,200	76,300	76,400	76,500	76,600	76,700	76,800	76,890	76,980	77,070	77,160	77,250	77,340	77,420	77,510	77,590	77,680	77,760	21
22	81,260	81,350	81,440	81,520	81,610	81,690	81,780	81,860	81,940	82,020	82,100	82,170	82,230	82,300	82,370	82,430	82,500	82,560	82,630	82,690	82,750	22
23	84,540	84,730	84,930	85,120	85,310	85,500	85,700	85,890	86,080	86,270	86,460	86,640	86,820	87,010	87,190	87,370	87,550	87,730	87,910	88,090	88,270	23
24	87,820	88,120	88,420	88,720	89,020	89,320	89,620	89,920	90,220	90,520	90,820	91,120	91,410	91,710	92,010	92,300	92,600	92,900	93,200	93,490	93,790	24
25	91,090	91,500	91,900	92,310	92,720	93,130	93,540	93,950	94,360	94,770	95,180	95,590	96,000	96,410	96,830	97,240	97,650	98,070	98,480	98,900	99,310	25
26	91,090	91,500	91,900	92,310	92,720	93,130	93,540	93,950	94,360	94,770	95,180	95,590	96,000	96,410	96,830	97,240	97,650	98,070	98,480	98,900	99,310	26
27	91,090	91,500	91,900	92,310	92,720	93,130	93,540	93,950	94,360	94,770	95,180	95,590	96,000	96,410	96,830	97,240	97,650	98,070	98,480	98,900	99,310	27
28	91,090	91,500	91,900	92,310	92,720	93,130	93,540	93,950	94,360	94,770	95,180	95,590	96,000	96,410	96,830	97,240	97,650	98,070	98,480	98,900	99,310	28

HEADWATER ELEVATION

GATE ARRANGEMENT	810.0	810.1	810.2	810.3	810.4	810.5	810.6	810.7	810.8	810.9	811.0	811.1	811.2	811.3	811.4	811.5	811.6	811.7	811.8	811.9	812.0	GATE ARRANGEMENT
1	2,960	2,960	2,970	2,970	2,980	2,980	2,990	2,990	3,000	3,000	3,000	3,010	3,010	3,020	3,020	3,030	3,030	3,040	3,040	3,050	3,050	1
2	6,450	6,460	6,470	6,480	6,490	6,500	6,510	6,520	6,530	6,540	6,550	6,560	6,570	6,580	6,590	6,600	6,610	6,620	6,630	6,640	6,650	2
3	10,040	10,050	10,070	10,080	10,100	10,110	10,130	10,150	10,160	10,180	10,190	10,210	10,220	10,240	10,250	10,270	10,280	10,300	10,310	10,330	10,340	3
4	13,970	13,990	14,010	14,030	14,050	14,070	14,090	14,110	14,130	14,150	14,170	14,190	14,210	14,230	14,250	14,260	14,280	14,300	14,320	14,340	14,360	4
5	17,670	17,700	17,730	17,750	17,780	17,800	17,830	17,850	17,880	17,900	17,930	17,950	17,980	18,000	18,030	18,050	18,070	18,100	18,120	18,150	18,170	5
6	20,940	20,970	21,000	21,030	21,060	21,090	21,120	21,150	21,180	21,210	21,240	21,270	21,300	21,330	21,360	21,390	21,420	21,450	21,480	21,510	21,540	6
7	24,430	24,470	24,500	24,540	24,580	24,610	24,650	24,680	24,720	24,750	24,790	24,820	24,860	24,900	24,930	24,970	25,000	25,040	25,070	25,110	25,140	7
8	27,700	27,740	27,780	27,820	27,870	27,910	27,950	27,990	28,030	28,070	28,110	28,150	28,190	28,230	28,270	28,310	28,350	28,400	28,440	28,480	28,520	8
9	31,050	31,100	31,140	31,190	31,240	31,280	31,330	31,380	31,420	31,470	31,520	31,560	31,610	31,660	31,700	31,750	31,800	31,840	31,890	31,930	31,980	9
10	34,220	34,270	34,320	34,380	34,430	34,480	34,530	34,590	34,640	34,690	34,740	34,790	34,850	34,900	34,950	35,000	35,050	35,100	35,160	35,210	35,260	10
11	37,240	37,300	37,360	37,420	37,480	37,540	37,600	37,660	37,720	37,780	37,840	37,900	37,960	38,020	38,080	38,140	38,200	38,260	38,310	38,370	38,430	11
12	40,610	40,680	40,740	40,810	40,880	40,940	41,010	41,080	41,140	41,210	41,270	41,340	41,410	41,470	41,540	41,600	41,670	41,740	41,800	41,870	41,930	12
13	43,920	44,000	44,070	44,140	44,210	44,280	44,360	44,430	44,500	44,570	44,640	44,710	44,790	44,860	44,930	45,000	45,070	45,140	45,210	45,280	45,350	13
14	47,180	47,260	47,340	47,420	47,490	47,570	47,650	47,720	47,800	47,880	47,960	48,030	48,110	48,180	48,260	48,340	48,410	48,490	48,560	48,640	48,720	14
15	50,360	50,450	50,530	50,610	50,700	50,780	50,870	50,950	51,030	51,120	51,200	51,280	51,370	51,450	51,530	51,620	51,700	51,780	51,860	51,940	52,030	15
16	53,480	53,570	53,670	53,760	53,850	53,940	54,030	54,120	54,210	54,300	54,390	54,480	54,570	54,660	54,750	54,840	54,930	55,020	55,110	55,200	55,280	16
17	58,250	58,350	58,460	58,560	58,660	58,770	58,870	58,970	59,080	59,180	59,280	59,380	59,480	59,590	59,690	59,790	59,890	59,990	60,090	60,190	60,290	17
18	63,020	63,130	63,250	63,360	63,480	63,600	63,710	63,830	63,940	64,050	64,170	64,280	64,400	64,510	64,620	64,740	64,850	64,960	65,070	65,190	65,300	18
19	67,780	67,910	68,040	68,170	68,300	68,420	68,550	68,680	68,800	68,930	69,060	69,180	69,310	69,430	69,560	69,680	69,810	69,930	70,060	70,180	70,310	19
20	72,770	72,880	72,990	73,100	73,220	73,320	73,430	73,540	73,650	73,760	73,870	73,990	74,120	74,250	74,370	74,500	74,630	74,750	74,880	75,000	75,130	20
21	77,760	77,850	77,950	78,040	78,130	78,230	78,320	78,410	78,500	78,590	78,680	78,810	78,930	79,060	79,190	79,320	79,440	79,570	79,700	79,820	79,950	21
22	82,750	82,830	82,900	82,980	83,050	83,130	83,200	83,270	83,350	83,420	83,490	83,620	83,750	83,880	84,000	84,130	84,260	84,390	84,510	84,640	84,770	22
23	88,270	88,460	88,650	88,840	89,030	89,220	89,410	89,590	89,780	89,970	90,160	90,380	90,610	90,820	90,980	91,150	91,320	91,480	91,650	91,810	91,970	23
24	93,790	94,090	94,400	94,700	95,000	95,310	95,610	95,920	96,220	96,520	96,830	97,150	97,470	97,760	97,960	98,170	98,370	98,580	98,780	98,980	99,180	24
25	99,310	99,730	100,100	100,600	101,000	101,400	101,800	102,200	102,700	103,100	103,500	103,900	104,300	104,700	104,900	105,200	105,400	105,700	105,900	106,100	106,400	25
26	99,310	99,730	100,100	100,600	101,000	101,400	101,800	102,200	102,700	103,100	103,500	103,900	104,300	104,700	105,000	105,300	105,600	105,900	106,200	106,500	106,800	26
27	99,310	99,730	100,100	100,600	101,000	101,400	101,800	102,200	102,700	103,100	103,500	103,900	104,300	104,700	105,100	105,500	105,800	106,200	106,600	106,900	107,300	27
28	99,310	99,730	100,100	100,600	101,000	101,400	101,800	102,200	102,700	103,100	103,500	103,900	104,300	104,800	105,200	105,600	106,000	106,400	106,900	107,300	107,700	28

HEADWATER 808 to 812
TAILWATER 777.51 to 778.5

MAY 2008

TELLICO DAM
SPILLWAY DISCHARGE
IN CUBIC FEET PER SECOND

HEADWATER ELEVATION

GATE ARRANGEMENT	812.0	812.1	812.2	812.3	812.4	812.5	812.6	812.7	812.8	812.9	813.0	813.1	813.2	813.3	813.4	813.5	813.6	813.7	813.8	813.9	814.0	GATE ARRANGEMENT
1	3,050	3,050	3,060	3,060	3,070	3,070	3,080	3,080	3,090	3,090	3,090	3,100	3,100	3,110	3,110	3,120	3,120	3,130	3,130	3,130	3,140	1
2	6,650	6,660	6,670	6,680	6,690	6,700	6,710	6,710	6,720	6,730	6,740	6,750	6,760	6,770	6,780	6,790	6,800	6,810	6,820	6,830	6,840	2
3	10,340	10,360	10,380	10,390	10,410	10,420	10,440	10,450	10,470	10,480	10,500	10,510	10,530	10,540	10,560	10,570	10,590	10,600	10,620	10,630	10,640	3
4	14,360	14,380	14,400	14,420	14,440	14,460	14,470	14,490	14,510	14,530	14,550	14,570	14,590	14,610	14,630	14,640	14,660	14,680	14,700	14,720	14,740	4
5	18,170	18,200	18,220	18,250	18,270	18,300	18,320	18,340	18,370	18,390	18,420	18,440	18,470	18,500	18,520	18,550	18,580	18,600	18,630	18,650	18,680	5
6	21,540	21,570	21,600	21,630	21,660	21,690	21,720	21,740	21,770	21,800	21,830	21,860	21,890	21,920	21,950	21,980	22,010	22,030	22,060	22,090	22,120	6
7	25,140	25,180	25,210	25,250	25,280	25,320	25,350	25,390	25,420	25,450	25,490	25,520	25,560	25,590	25,630	25,660	25,690	25,730	25,760	25,800	25,830	7
8	28,520	28,560	28,600	28,640	28,680	28,720	28,760	28,800	28,840	28,880	28,920	28,960	28,990	29,030	29,070	29,110	29,150	29,190	29,230	29,270	29,310	8
9	31,980	32,020	32,070	32,120	32,160	32,210	32,250	32,300	32,340	32,390	32,430	32,480	32,520	32,570	32,610	32,660	32,700	32,750	32,790	32,840	32,880	9
10	35,260	35,310	35,360	35,410	35,460	35,510	35,560	35,610	35,670	35,720	35,770	35,820	35,870	35,920	35,970	36,020	36,070	36,120	36,170	36,220	36,270	10
11	38,430	38,490	38,550	38,610	38,670	38,720	38,780	38,840	38,900	38,950	39,010	39,070	39,130	39,180	39,240	39,300	39,360	39,410	39,470	39,530	39,580	11
12	41,930	41,990	42,060	42,120	42,180	42,240	42,310	42,370	42,430	42,490	42,550	42,620	42,680	42,750	42,810	42,880	42,940	43,000	43,070	43,130	43,190	12
13	45,350	45,420	45,490	45,560	45,630	45,700	45,760	45,830	45,900	45,970	46,040	46,100	46,170	46,230	46,300	46,360	46,430	46,490	46,560	46,620	46,690	13
14	48,720	48,790	48,870	48,940	49,020	49,090	49,170	49,240	49,320	49,390	49,460	49,540	49,610	49,690	49,760	49,830	49,910	49,980	50,060	50,130	50,200	14
15	52,030	52,110	52,190	52,270	52,350	52,430	52,520	52,600	52,680	52,760	52,840	52,920	53,000	53,080	53,160	53,240	53,320	53,400	53,480	53,560	53,640	15
16	55,280	55,370	55,460	55,550	55,640	55,730	55,810	55,900	55,990	56,080	56,160	56,250	56,340	56,420	56,510	56,600	56,680	56,770	56,860	56,940	57,030	16
17	60,290	60,390	60,490	60,590	60,690	60,790	60,890	60,990	61,090	61,190	61,290	61,390	61,480	61,580	61,680	61,780	61,880	61,970	62,070	62,170	62,260	17
18	65,300	65,410	65,520	65,630	65,750	65,860	65,970	66,080	66,190	66,300	66,410	66,520	66,630	66,740	66,850	66,960	67,070	67,180	67,280	67,390	67,500	18
19	70,310	70,430	70,550	70,680	70,800	70,920	71,040	71,170	71,290	71,410	71,530	71,650	71,770	71,900	72,020	72,140	72,260	72,380	72,500	72,620	72,740	19
20	75,130	75,260	75,390	75,520	75,650	75,780	75,910	76,040	76,170	76,290	76,420	76,560	76,690	76,820	76,960	77,090	77,220	77,360	77,490	77,620	77,750	20
21	79,950	80,080	80,220	80,360	80,500	80,630	80,770	80,910	81,040	81,180	81,310	81,460	81,610	81,750	81,900	82,050	82,190	82,340	82,480	82,630	82,770	21
22	84,770	84,910	85,060	85,200	85,350	85,490	85,630	85,780	85,920	86,060	86,200	86,360	86,520	86,680	86,840	87,000	87,160	87,320	87,470	87,630	87,790	22
23	91,970	92,070	92,170	92,270	92,360	92,460	92,550	92,650	92,740	92,830	92,920	93,030	93,150	93,260	93,370	93,480	93,590	93,690	93,800	93,910	94,020	23
24	99,180	99,230	99,280	99,330	99,380	99,430	99,470	99,520	99,560	99,600	99,640	99,700	99,770	99,830	99,890	99,950	100,000	100,100	100,100	100,200	100,200	24
25	106,400	106,400	106,400	106,400	106,400	106,400	106,400	106,400	106,400	106,400	106,400	106,400	106,400	106,400	106,400	106,400	106,400	106,400	106,500	106,500	106,500	25
26	106,800	107,000	107,100	107,300	107,400	107,500	107,700	107,800	108,000	108,100	108,200	108,400	108,500	108,700	108,900	109,000	109,200	109,300	109,500	109,600	109,800	26
27	107,300	107,600	107,800	108,100	108,400	108,700	109,000	109,300	109,600	109,800	110,100	110,400	110,700	111,000	111,300	111,600	111,900	112,200	112,500	112,700	113,000	27
28	107,700	108,100	108,600	109,000	109,400	109,900	110,300	110,700	111,100	111,600	112,000	112,400	112,900	113,300	113,700	114,200	114,600	115,000	115,400	115,900	116,300	28

HEADWATER ELEVATION

GATE ARRANGEMENT	814.0	814.1	814.2	814.3	814.4	814.5	814.6	814.7	814.8	814.9	815.0	815.1	815.2	815.3	815.4	815.5	815.6	815.7	815.8	815.9	816.0	GATE ARRANGEMENT
1	3,140	3,140	3,150	3,150	3,160	3,160	3,160	3,170	3,170	3,180	3,180	3,190	3,190	3,190	3,200	3,200						1
2	6,840	6,850	6,860	6,870	6,880	6,890	6,900	6,910	6,910	6,920	6,930	6,940	6,950	6,960	6,970	6,980	6,990	7,000	7,010	7,020	7,030	2
3	10,640	10,660	10,670	10,690	10,700	10,720	10,730	10,750	10,760	10,780	10,790	10,810	10,820	10,840	10,850	10,860	10,880	10,890	10,910	10,920	10,940	3
4	14,740	14,760	14,780	14,790	14,810	14,830	14,850	14,870	14,890	14,910	14,920	14,940	14,960	14,980	15,000	15,020	15,030	15,050	15,070	15,090	15,110	4
5	18,680	18,710	18,740	18,760	18,790	18,820	18,850	18,880	18,900	18,930	18,960	18,980	19,010	19,030	19,060	19,080	19,110	19,130	19,160	19,180	19,210	5
6	22,120	22,150	22,180	22,210	22,240	22,260	22,290	22,320	22,350	22,380	22,410	22,440	22,460	22,490	22,520	22,550	22,580	22,600	22,630	22,660	22,690	6
7	25,830	25,870	25,900	25,930	25,970	26,000	26,030	26,070	26,100	26,140	26,170	26,200	26,240	26,270	26,300	26,340	26,370	26,400	26,440	26,470	26,500	7
8	29,310	29,350	29,390	29,430	29,470	29,500	29,540	29,580	29,620	29,660	29,700	29,740	29,780	29,810	29,850	29,890	29,930	29,970	30,010	30,040	30,080	8
9	32,880	32,930	32,970	33,010	33,060	33,100	33,150	33,190	33,240	33,280	33,320	33,370	33,410	33,460	33,500	33,540	33,590	33,630	33,670	33,720	33,760	9
10	36,270	36,320	36,370	36,420	36,470	36,520	36,570	36,620	36,660	36,710	36,760	36,810	36,860	36,910	36,960	37,010	37,060	37,110	37,150	37,200	37,250	10
11	39,580	39,640	39,700	39,750	39,810	39,870	39,930	39,980	40,040	40,100	40,150	40,210	40,270	40,330	40,390	40,450	40,500	40,560	40,620	40,680	40,740	11
12	43,190	43,260	43,320	43,380	43,440	43,500	43,570	43,630	43,690	43,750	43,810	43,880	43,940	44,000	44,070	44,130	44,190	44,260	44,320	44,380	44,450	12
13	46,690	46,750	46,820	46,890	46,950	47,020	47,090	47,150	47,220	47,290	47,350	47,430	47,500	47,570	47,650	47,720	47,790	47,870	47,940	48,010	48,090	13
14	50,200	50,280	50,350	50,430	50,510	50,580	50,660	50,730	50,810	50,880	50,960	51,030	51,100	51,170	51,240	51,320	51,390	51,460	51,530	51,600	51,670	14
15	53,640	53,720	53,800	53,880	53,960	54,040	54,110	54,190	54,270	54,350	54,430	54,510	54,590	54,660	54,740	54,820	54,900	54,970	55,050	55,130	55,210	15
16	57,030	57,110	57,200	57,290	57,370	57,460	57,540	57,630	57,710	57,800	57,880	57,970	58,050	58,130	58,220	58,300	58,390	58,470	58,550	58,640	58,720	16
17	62,260	62,360	62,460	62,560	62,650	62,750	62,840	62,940	63,040	63,130	63,230	63,320	63,420	63,510	63,610	63,700	63,800	63,890	63,990	64,080	64,180	17
18	67,500	67,610	67,720	67,820	67,930	68,040	68,150	68,250	68,360	68,470	68,570	68,680	68,790	68,890	69,000	69,100	69,210	69,320	69,420	69,530	69,630	18
19	72,740	72,860	72,980	73,090	73,210	73,330	73,450	73,570	73,690	73,800	73,920	74,040	74,160	74,270	74,390	74,510	74,620	74,740	74,860	74,970	75,090	19
20	77,750	77,890	78,020	78,150	78,280	78,420	78,550	78,680	78,810	78,940	79,070	79,200	79,330	79,460	79,590	79,720	79,850	79,980	80,110	80,240	80,360	20
21	82,770	82,920	83,060	83,210	83,350	83,500	83,640	83,790	83,930	84,080	84,220	84,360	84,510	84,650	84,790	84,930	85,070	85,220	85,360	85,500	85,640	21
22	87,790	87,950	88,110	88,270	88,420	88,580	88,740	88,900	89,050	89,210	89,370	89,520	89,680	89,840	89,990	90,150	90,300	90,460	90,610	90,760	90,920	22
23	94,020	94,140	94,260	94,380	94,510	94,630	94,750	94,870	94,990	95,110	95,220	95,360	95,490	95,620	95,750	95,890	96,020	96,150	96,280	96,410	96,530	23
24	100,200	100,300	100,400	100,500	100,600	100,700	100,800	100,900	101,000	101,100	101,200	101,300	101,400	101,500	101,600	101,700	101,800	101,900	102,000	102,200	102,200	24
25	106,500	106,500	106,600	106,600	106,700	106,700	106,800	106,800	106,900	106,900	107,000	107,100	107,200	107,300	107,400	107,400	107,500	107,600	107,700	107,700	107,800	25
26	109,800	109,900	110,100	110,300	110,500	110,600	110,800	111,000	111,200	111,300	111,600	111,600	111,700	111,700	111,800	111,800	111,900	112,000	112,000	112,100	112,100	26
27	113,000	113,300	113,600	114,000	114,300	114,600	114,900	115,200	115,500	115,800	116,200	116,200	116,200	116,300	116,300	116,300	116,400	116,400	116,400	116,400	116,500	27
28	116,300	116,800	117,200	117,600	118,100	118,500	118,900	119,400	119,800	120,200	120,800	120,800	120,800	120,800	120,800	120,800	120,800	120,800	120,800	120,800	120,800	28

MAY 2008

See special instruction for preventing gate overflow on page 2.

HEADWATER 812 to 816
TAILWATER 777.51 to 778.5

TELLICO DAM
SPILLWAY DISCHARGE
IN CUBIC FEET PER SECOND

GATE ARRANGEMENT	HEADWATER ELEVATION																				GATE ARRANGEMENT
	816.0	816.1	816.2	816.3	816.4	816.5	816.6	816.7	816.8	816.9	817.0	817.1	817.2	817.3	817.4	817.5	817.6	817.7	817.8	817.9	818.0	
1																						1
2	7,030	7,040	7,050																			2
3	10,940	10,950	10,970	10,980	10,990	11,010	11,020	11,040	11,050	11,070	11,080											3
4	15,110	15,130	15,140	15,160	15,180	15,200	15,220	15,230	15,250	15,270	15,290	15,490	15,850	16,310	16,850	17,470	18,160	18,910				4
5	19,210	19,230	19,260	19,280	19,300	19,330	19,350	19,370	19,400	19,420	19,440	19,650	20,010	20,480	21,030	21,650	22,350	23,100	23,920	24,790	25,720	5
6	22,690	22,720	22,740	22,770	22,800	22,830	22,860	22,880	22,910	22,940	22,970	23,180	23,550	24,020	24,570	25,200	25,900	26,660	27,480	28,360	29,290	6
7	26,500	26,540	26,570	26,600	26,640	26,670	26,700	26,730	26,770	26,800	26,830	27,050	27,420	27,900	28,460	29,090	29,790	30,560	31,390	32,270	33,200	7
8	30,080	30,120	30,160	30,200	30,230	30,270	30,310	30,350	30,390	30,420	30,460	30,680	31,060	31,540	32,100	32,740	33,450	34,220	35,050	35,940	36,880	8
9	33,760	33,800	33,850	33,890	33,930	33,980	34,020	34,060	34,110	34,150	34,190	34,420	34,800	35,290	35,860	36,500	37,210	37,990	38,820	39,720	40,660	9
10	37,250	37,300	37,350	37,400	37,440	37,490	37,540	37,590	37,640	37,680	37,730	37,960	38,350	38,840	39,420	40,070	40,780	41,570	42,410	43,300	44,250	10
11	40,740	40,800	40,860	40,910	40,970	41,030	41,090	41,150	41,210	41,270	41,330	41,570	41,970	42,470	43,060	43,720	44,450	45,240	46,100	47,000	47,970	11
12	44,450	44,510	44,580	44,640	44,700	44,770	44,830	44,900	44,960	45,020	45,090	45,330	45,730	46,240	46,830	47,490	48,230	49,020	49,880	50,790	51,750	12
13	48,090	48,160	48,220	48,290	48,360	48,430	48,490	48,560	48,630	48,700	48,760	49,010	49,420	49,930	50,520	51,190	51,920	52,720	53,580	54,490	55,460	13
14	51,670	51,740	51,820	51,890	51,960	52,030	52,100	52,170	52,240	52,310	52,380	52,630	53,040	53,550	54,140	54,810	55,550	56,350	57,210	58,120	59,090	14
15	55,210	55,280	55,360	55,440	55,510	55,590	55,670	55,740	55,820	55,900	55,970	56,230	56,650	57,170	57,770	58,450	59,190	60,000	60,870	61,790	62,770	15
16	58,720	58,800	58,890	58,970	59,050	59,140	59,220	59,300	59,380	59,470	59,550	59,810	60,240	60,760	61,370	62,050	62,800	63,620	64,490	65,420	66,410	16
17	64,180	64,270	64,360	64,460	64,550	64,640	64,740	64,830	64,920	65,020	65,110	65,390	65,820	66,350	66,970	67,670	68,430	69,250	70,140	71,080	72,070	17
18	69,630	69,740	69,840	69,940	70,050	70,150	70,260	70,360	70,460	70,570	70,670	70,960	71,400	71,950	72,580	73,280	74,050	74,890	75,780	76,740	77,740	18
19	75,090	75,200	75,320	75,430	75,550	75,660	75,780	75,890	76,010	76,120	76,230	76,530	76,980	77,540	78,180	78,900	79,680	80,520	81,430	82,390	83,410	19
20	80,360	80,490	80,620	80,750	80,870	81,000	81,130	81,260	81,380	81,510	81,640	81,950	82,410	82,980	83,630	84,360	85,150	86,010	86,930	87,900	88,930	20
21	85,640	85,780	85,920	86,060	86,200	86,340	86,480	86,620	86,760	86,900	87,040	87,360	87,840	88,420	89,080	89,820	90,630	91,500	92,430	93,420	94,460	21
22	90,920	91,070	91,220	91,380	91,530	91,680	91,830	91,990	92,140	92,290	92,440	92,770	93,260	93,860	94,530	95,290	96,110	96,990	97,930	98,930	99,980	22
23	96,530	96,680	96,820	96,960	97,090	97,230	97,370	97,510	97,650	97,780	97,920	98,250	98,730	99,320	99,990	100,700	101,500	102,400	103,400	104,300	105,400	23
24	102,200	102,300	102,400	102,500	102,700	102,800	102,900	103,000	103,200	103,300	103,400	103,700	104,200	104,800	105,400	106,200	107,000	107,900	108,800	109,800	110,800	24
25	107,800	107,900	108,000	108,100	108,200	108,300	108,400	108,600	108,700	108,800	108,900	109,200	109,700	110,200	110,900	111,600	112,400	113,300	114,200	115,200	116,200	25
26	112,100	112,200	112,300	112,400	112,400	112,500	112,600	112,700	112,700	112,800	112,900	113,200	113,600	114,100	114,800	115,500	116,200	117,000	117,900	118,900	119,800	26
27	116,500	116,500	116,600	116,600	116,700	116,700	116,700	116,800	116,800	116,900	116,900	117,200	117,500	118,000	118,600	119,300	120,000	120,800	121,600	122,500	123,500	27
28	120,800	120,800	120,900	120,900	120,900	120,900	120,900	120,900	120,900	120,900	120,900	121,100	121,500	121,900	122,500	123,100	123,800	124,500	125,300	126,200	127,100	28

GATE ARRANGEMENT	HEADWATER ELEVATION																				GATE ARRANGEMENT
	818.0	818.1	818.2	818.3	818.4	818.5	818.6	818.7	818.8	818.9	819.0	819.1	819.2	819.3	819.4	819.5	819.6	819.7	819.8	819.9	820.0	
1																						1
2																						2
3																						3
4																						4
5	25,720	26,690	27,720	28,800	29,930																	5
6	29,290	30,270	31,300	32,380	33,510	34,690	35,910	37,170	38,480	39,830	41,220	42,650										6
7	33,200	34,190	35,230	36,310	37,450	38,630	39,850	41,120	42,430	43,790	45,190	46,620	48,100	49,620	51,180	52,780	54,410	56,090	57,800			7
8	36,880	37,870	38,910	40,010	41,140	42,330	43,560	44,830	46,150	47,510	48,910	50,350	51,840	53,360	54,920	56,530	58,170	59,840	61,560	63,310	65,100	8
9	40,660	41,660	42,710	43,800	44,950	46,130	47,370	48,650	49,970	51,340	52,740	54,190	55,680	57,210	58,780	60,380	62,030	63,710	65,430	67,190	68,980	9
10	44,250	45,250	46,310	47,410	48,560	49,750	50,990	52,280	53,600	54,970	56,380	57,840	59,330	60,860	62,440	64,050	65,700	67,390	69,110	70,880	72,670	10
11	47,970	48,990	50,060	51,180	52,350	53,560	54,820	56,120	57,470	58,860	60,290	61,760	63,270	64,810	66,400	68,030	69,690	71,400	73,140	74,910	76,730	11
12	51,750	52,780	53,850	54,970	56,140	57,360	58,620	59,930	61,280	62,670	64,100	65,580	67,100	68,650	70,250	71,880	73,560	75,270	77,020	78,810	80,630	12
13	55,460	56,490	57,560	58,690	59,860	61,080	62,350	63,650	65,010	66,400	67,840	69,310	70,830	72,390	73,990	75,630	77,300	79,020	80,770	82,560	84,380	13
14	59,090	60,120	61,200	62,320	63,500	64,720	65,980	67,290	68,640	70,040	71,470	72,950	74,460	76,020	77,610	79,240	80,920	82,620	84,370	86,160	87,980	14
15	62,770	63,800	64,880	66,010	67,190	68,410	69,680	70,990	72,340	73,740	75,180	76,660	78,180	79,740	81,340	82,980	84,660	86,370	88,130	89,920	91,740	15
16	66,410	67,440	68,530	69,660	70,850	72,070	73,350	74,670	76,030	77,430	78,870	80,360	81,890	83,450	85,060	86,700	88,390	90,110	91,870	93,660	95,500	16
17	72,070	73,120	74,220	75,360	76,550	77,790	79,080	80,400	81,780	83,190	84,640	86,140	87,680	89,250	90,870	92,520	94,220	95,950	97,720	99,520	101,400	17
18	77,740	78,800	79,900	81,060	82,260	83,510	84,810	86,140	87,520	88,950	90,410	91,920	93,470	95,050	96,680	98,340	100,000	101,800	103,600	105,400	107,200	18
19	83,410	84,470	85,590	86,760	87,970	89,230	90,530	91,880	93,270	94,710	96,180	97,700	99,260	100,900	102,500	104,200	105,900	107,600	109,400	111,200	113,100	19
20	88,930	90,010	91,140	92,320	93,540	94,810	96,130	97,490	98,890	100,300	101,800	103,400	104,900	106,500	108,200	109,900	111,600	113,400	115,200	117,000	118,900	20
21	94,460	95,550	96,690	97,880	99,110	100,400	101,700	103,100	104,500	106,000	107,500	109,000	110,600	112,200	113,900	115,600	117,300	119,100	120,900	122,700	124,600	21
22	99,980	101,100	102,200	103,400	104,700	106,000	107,300	108,700	110,100	111,600	113,100	114,700	116,300	117,900	119,600	121,300	123,000	124,800	126,600	128,500	130,400	22
23	105,400	106,500	107,600	108,800	110,100	111,400	112,700	114,100	115,500	117,000	118,500	120,100	121,600	123,300	124,900	126,700	128,400	130,200	132,000	133,900	135,800	23
24	110,800	111,900	113,000	114,200	115,500	116,800	118,100	119,500	120,900	122,400	123,900	125,400	127,000	128,700	130,300	132,000	133,800	135,600	137,400	139,300	141,200	24
25	116,200	117,300	118,500	119,700	120,900	122,200	123,500	124,900	126,300	127,800	129,300	130,800	132,400	134,000	135,700	137,400	139,200	141,000	142,800	144,600	146,500	25
26	119,800	121,000	122,100	123,400	124,600	125,900	127,300	128,700	130,100	131,600	133,100	134,700	136,300	138,000	139,700	141,400	143,200	145,000	146,800	148,700	150,600	26
27	123,500	124,600	125,800	127,100	128,300	129,700	131,100	132,500	133,900	135,400	137,000	138,600	140,200	141,900	143,600	145,300	147,100	149,000	150,800	152,700	154,700	27
28	127,100	128,300	129,500	130,800	132,100	133,400	134,800	136,300	137,800	139,300	140,900	142,500	144,100	145,800	147,500	149,300	151,100	153,000	154,800	156,800	158,700	28

HEADWATER 816 to 820
TAILWATER 777.51 to 778.5

See special instruction for preventing gate overflow on page 2.

MAY 2008

TELLICO DAM
SPILLWAY DISCHARGE
IN CUBIC FEET PER SECOND

HEADWATER ELEVATION

GATE ARRANGEMENT	800.0	800.1	800.2	800.3	800.4	800.5	800.6	800.7	800.8	800.9	801.0	801.1	801.2	801.3	801.4	801.5	801.6	801.7	801.8	801.9	802.0	GATE ARRANGEMENT
1	2,390	2,400	2,400	2,410	2,410	2,420	2,420	2,430	2,440	2,440	2,450	2,450	2,460	2,460	2,470	2,470	2,480	2,490	2,490	2,500	2,500	1
2	5,210	5,220	5,230	5,240	5,260	5,270	5,280	5,290	5,300	5,320	5,330	5,340	5,350	5,370	5,380	5,390	5,400	5,410	5,430	5,440	5,450	2
3	8,080	8,100	8,120	8,140	8,160	8,180	8,200	8,220	8,240	8,260	8,270	8,290	8,310	8,330	8,350	8,370	8,390	8,410	8,420	8,440	8,460	3
4	11,020	11,050	11,080	11,100	11,130	11,160	11,190	11,220	11,240	11,270	11,300	11,330	11,350	11,380	11,410	11,440	11,460	11,490	11,520	11,540	11,570	4
5	14,410	14,450	14,480	14,510	14,550	14,580	14,610	14,640	14,680	14,710	14,740	14,770	14,810	14,840	14,870	14,900	14,940	14,970	15,000	15,030	15,070	5
6	17,630	17,670	17,710	17,740	17,780	17,810	17,850	17,880	17,920	17,950	17,990	18,030	18,060	18,100	18,130	18,170	18,200	18,240	18,270	18,310	18,340	6
7	20,510	20,550	20,600	20,640	20,680	20,720	20,770	20,810	20,850	20,890	20,930	20,980	21,020	21,060	21,100	21,140	21,180	21,230	21,270	21,310	21,350	7
8	23,160	23,210	23,260	23,310	23,360	23,410	23,460	23,510	23,560	23,610	23,650	23,700	23,750	23,800	23,850	23,900	23,940	23,990	24,040	24,090	24,130	8
9	25,900	25,960	26,010	26,070	26,120	26,180	26,240	26,290	26,350	26,400	26,460	26,510	26,570	26,620	26,680	26,730	26,790	26,840	26,900	26,950	27,010	9
10	28,440	28,500	28,560	28,630	28,690	28,750	28,820	28,880	28,940	29,000	29,070	29,130	29,190	29,250	29,320	29,380	29,440	29,500	29,560	29,620	29,680	10
11	30,830	30,900	30,970	31,040	31,110	31,180	31,250	31,320	31,390	31,460	31,530	31,600	31,670	31,740	31,810	31,880	31,940	32,010	32,080	32,150	32,220	11
12	33,560	33,630	33,700	33,780	33,850	33,920	34,000	34,070	34,140	34,220	34,290	34,360	34,440	34,520	34,590	34,670	34,750	34,820	34,900	34,970	35,050	12
13	36,170	36,250	36,330	36,420	36,500	36,580	36,660	36,740	36,820	36,890	36,970	37,060	37,140	37,230	37,310	37,390	37,480	37,560	37,640	37,720	37,810	13
14	38,690	38,780	38,870	38,960	39,050	39,140	39,230	39,320	39,400	39,490	39,580	39,670	39,760	39,850	39,940	40,030	40,120	40,210	40,300	40,390	40,480	14
15	41,120	41,220	41,320	41,420	41,520	41,610	41,710	41,810	41,910	42,000	42,100	42,200	42,300	42,400	42,490	42,590	42,690	42,790	42,880	42,980	43,070	15
16	43,470	43,580	43,680	43,790	43,900	44,010	44,110	44,220	44,320	44,430	44,540	44,640	44,750	44,860	44,960	45,070	45,170	45,280	45,380	45,490	45,590	16
17	47,400	47,520	47,630	47,750	47,860	47,980	48,090	48,200	48,320	48,430	48,540	48,650	48,760	48,870	48,980	49,090	49,200	49,310	49,420	49,530	49,640	17
18	51,340	51,460	51,590	51,710	51,830	51,950	52,070	52,190	52,310	52,430	52,550	52,660	52,780	52,890	53,010	53,120	53,230	53,350	53,460	53,570	53,680	18
19	55,270	55,410	55,540	55,670	55,800	55,920	56,050	56,180	56,300	56,430	56,550	56,670	56,790	56,910	57,030	57,150	57,260	57,380	57,500	57,610	57,720	19
20	56,930	57,140	57,350	57,560	57,770	57,970	58,180	58,380	58,590	58,800	59,000	59,200	59,410	59,610	59,810	60,010	60,220	60,420	60,620	60,820	61,020	20
21	58,600	58,880	59,170	59,450	59,740	60,020	60,310	60,590	60,880	61,160	61,450	61,740	62,020	62,310	62,590	62,880	63,170	63,450	63,740	64,030	64,310	21
22	60,260	60,620	60,980	61,340	61,710	62,070	62,440	62,800	63,170	63,530	63,900	64,270	64,640	65,010	65,380	65,750	66,120	66,490	66,860	67,240	67,610	22
23	60,260	60,620	60,980	61,340	61,710	62,070	62,440	62,800	63,170	63,530	63,900	64,270	64,640	65,010	65,380	65,750	66,120	66,490	66,860	67,240	67,610	23
24	60,260	60,620	60,980	61,340	61,710	62,070	62,440	62,800	63,170	63,530	63,900	64,270	64,640	65,010	65,380	65,750	66,120	66,490	66,860	67,240	67,610	24
25	60,260	60,620	60,980	61,340	61,710	62,070	62,440	62,800	63,170	63,530	63,900	64,270	64,640	65,010	65,380	65,750	66,120	66,490	66,860	67,240	67,610	25
26	60,260	60,620	60,980	61,340	61,710	62,070	62,440	62,800	63,170	63,530	63,900	64,270	64,640	65,010	65,380	65,750	66,120	66,490	66,860	67,240	67,610	26
27	60,260	60,620	60,980	61,340	61,710	62,070	62,440	62,800	63,170	63,530	63,900	64,270	64,640	65,010	65,380	65,750	66,120	66,490	66,860	67,240	67,610	27
28	60,260	60,620	60,980	61,340	61,710	62,070	62,440	62,800	63,170	63,530	63,900	64,270	64,640	65,010	65,380	65,750	66,120	66,490	66,860	67,240	67,610	28

HEADWATER ELEVATION

GATE ARRANGEMENT	802.0	802.1	802.2	802.3	802.4	802.5	802.6	802.7	802.8	802.9	803.0	803.1	803.2	803.3	803.4	803.5	803.6	803.7	803.8	803.9	804.0	GATE ARRANGEMENT
1	2,500	2,510	2,510	2,520	2,520	2,530	2,530	2,540	2,550	2,550	2,560	2,560	2,570	2,570	2,580	2,580	2,590	2,590	2,600	2,600	2,610	1
2	5,450	5,460	5,470	5,480	5,500	5,510	5,520	5,530	5,540	5,550	5,570	5,580	5,590	5,600	5,610	5,620	5,640	5,650	5,660	5,670	5,680	2
3	8,460	8,480	8,500	8,520	8,530	8,550	8,570	8,590	8,610	8,620	8,640	8,660	8,680	8,700	8,710	8,730	8,750	8,770	8,790	8,800	8,820	3
4	11,570	11,600	11,630	11,650	11,680	11,710	11,730	11,760	11,790	11,810	11,840	11,870	11,890	11,920	11,950	11,970	12,000	12,030	12,050	12,080	12,110	4
5	15,070	15,100	15,130	15,160	15,190	15,230	15,260	15,290	15,320	15,350	15,390	15,420	15,450	15,480	15,510	15,550	15,580	15,610	15,640	15,670	15,700	5
6	18,340	18,370	18,410	18,440	18,480	18,510	18,550	18,580	18,620	18,650	18,680	18,720	18,750	18,790	18,820	18,850	18,890	18,920	18,950	18,990	19,020	6
7	21,350	21,390	21,430	21,470	21,510	21,550	21,600	21,640	21,680	21,720	21,760	21,800	21,840	21,880	21,920	21,960	22,000	22,040	22,080	22,120	22,160	7
8	24,130	24,180	24,230	24,280	24,320	24,370	24,420	24,460	24,510	24,560	24,600	24,650	24,700	24,740	24,790	24,840	24,880	24,930	24,970	25,020	25,070	8
9	27,010	27,060	27,120	27,170	27,220	27,280	27,330	27,380	27,440	27,490	27,540	27,600	27,650	27,700	27,760	27,810	27,860	27,910	27,970	28,020	28,070	9
10	29,680	29,740	29,800	29,870	29,930	29,990	30,050	30,110	30,170	30,230	30,290	30,350	30,410	30,460	30,520	30,580	30,640	30,700	30,760	30,820	30,880	10
11	32,220	32,280	32,350	32,420	32,480	32,550	32,620	32,690	32,750	32,820	32,880	32,950	33,020	33,080	33,150	33,210	33,280	33,340	33,410	33,480	33,540	11
12	35,050	35,120	35,200	35,270	35,350	35,420	35,500	35,570	35,650	35,720	35,790	35,870	35,940	36,010	36,080	36,160	36,230	36,300	36,370	36,440	36,510	12
13	37,810	37,890	37,970	38,050	38,130	38,210	38,290	38,380	38,460	38,540	38,620	38,700	38,780	38,860	38,940	39,020	39,100	39,180	39,260	39,340	39,420	13
14	40,480	40,570	40,660	40,750	40,840	40,930	41,020	41,110	41,200	41,280	41,370	41,460	41,550	41,640	41,720	41,810	41,900	41,980	42,070	42,160	42,240	14
15	43,070	43,170	43,270	43,370	43,460	43,560	43,650	43,750	43,840	43,940	44,040	44,130	44,230	44,330	44,420	44,520	44,610	44,710	44,810	44,900	45,000	15
16	45,590	45,700	45,800	45,910	46,010	46,110	46,220	46,320	46,420	46,530	46,630	46,730	46,840	46,940	47,040	47,150	47,250	47,350	47,450	47,560	47,660	16
17	49,640	49,750	49,850	49,960	50,070	50,180	50,280	50,390	50,490	50,600	50,700	50,810	50,910	51,020	51,120	51,230	51,330	51,440	51,540	51,640	51,740	17
18	53,680	53,790	53,900	54,020	54,130	54,240	54,350	54,450	54,560	54,670	54,780	54,890	54,990	55,100	55,200	55,310	55,410	55,520	55,620	55,730	55,830	18
19	57,720	57,840	57,960	58,070	58,180	58,300	58,410	58,520	58,630	58,740	58,850	58,960	59,070	59,180	59,290	59,390	59,500	59,600	59,710	59,810	59,910	19
20	61,020	61,220	61,420	61,620	61,830	62,030	62,230	62,430	62,630	62,830	63,030	63,230	63,430	63,630	63,820	64,020	64,220	64,420	64,620	64,810	64,950	20
21	64,310	64,600	64,890	65,180	65,470	65,760	66,050	66,330	66,620	66,910	67,200	67,490	67,780	68,070	68,360	68,650	68,940	69,230	69,530	69,800	69,980	21
22	67,610	67,980	68,360	68,730	69,110	69,490	69,860	70,240	70,620	71,000	71,380	71,760	72,140	72,520	72,900	73,280	73,670	74,050	74,440	74,790	75,020	22
23	67,610	67,980	68,360	68,730	69,110	69,490	69,860	70,240	70,620	71,000	71,380	71,760	72,140	72,520	72,900	73,280	73,670	74,050	74,440	74,800	75,080	23
24	67,610	67,980	68,360	68,730	69,110	69,490	69,860	70,240	70,620	71,000	71,380	71,760	72,140	72,520	72,900	73,280	73,670	74,050	74,440	74,810	75,140	24
25	67,610	67,980	68,360	68,730	69,110	69,490	69,860	70,240	70,620	71,000	71,380	71,760	72,140	72,520	72,900	73,280	73,670	74,050	74,440	74,820	75,210	25
26	67,610	67,980	68,360	68,730	69,110	69,490	69,860	70,240	70,620	71,000	71,380	71,760	72,140	72,520	72,900	73,280	73,670	74,050	74,440	74,820	75,210	26
27	67,610	67,980	68,360	68,730	69,110	69,490	69,860	70,240	70,620	71,000	71,380	71,760	72,140	72,520	72,900	73,280	73,670	74,050	74,440	74,820	75,210	27
28	67,610	67,980	68,360	68,730	69,110	69,490	69,860	70,240	70,620	71,000	71,380	71,760	72,140	72,520	72,900	73,280	73,670	74,050	74,440	74,820	75,210	28

MAY 2008

HEADWATER 800 to 804
TAILWATER 778.51 to 779.5

TELLICO DAM
SPILLWAY DISCHARGE
IN CUBIC FEET PER SECOND

GATE ARRANGEMENT	HEADWATER ELEVATION																				GATE ARRANGEMENT
	804.0	804.1	804.2	804.3	804.4	804.5	804.6	804.7	804.8	804.9	805.0	805.1	805.2	805.3	805.4	805.5	805.6	805.7	805.8	805.9	806.0	
1	2,610	2,610	2,620	2,620	2,630	2,630	2,640	2,640	2,650	2,660	2,660	2,670	2,670	2,680	2,680	2,690	2,690	2,700	2,700	2,710	2,710	1
2	5,680	5,690	5,700	5,710	5,730	5,740	5,750	5,760	5,770	5,780	5,790	5,800	5,820	5,830	5,840	5,850	5,860	5,870	5,880	5,890	5,900	2
3	8,820	8,840	8,860	8,870	8,890	8,910	8,930	8,940	8,960	8,980	9,000	9,010	9,030	9,050	9,060	9,080	9,100	9,120	9,130	9,150	9,170	3
4	12,110	12,130	12,160	12,190	12,210	12,240	12,260	12,290	12,320	12,340	12,370	12,400	12,420	12,450	12,470	12,500	12,530	12,550	12,580	12,600	12,630	4
5	15,700	15,740	15,770	15,800	15,830	15,860	15,890	15,920	15,950	15,980	16,010	16,040	16,080	16,110	16,140	16,170	16,200	16,230	16,260	16,290	16,320	5
6	19,020	19,050	19,090	19,120	19,150	19,190	19,220	19,250	19,290	19,320	19,350	19,380	19,420	19,450	19,480	19,520	19,550	19,580	19,610	19,640	19,680	6
7	22,160	22,200	22,240	22,280	22,320	22,350	22,390	22,430	22,470	22,510	22,550	22,590	22,630	22,670	22,710	22,740	22,780	22,820	22,860	22,900	22,940	7
8	25,070	25,110	25,160	25,200	25,250	25,290	25,340	25,380	25,430	25,470	25,520	25,560	25,610	25,650	25,700	25,740	25,790	25,830	25,870	25,920	25,960	8
9	28,070	28,120	28,170	28,230	28,280	28,330	28,380	28,430	28,490	28,540	28,590	28,640	28,690	28,740	28,790	28,840	28,890	28,940	28,990	29,050	29,100	9
10	30,880	30,940	30,990	31,050	31,110	31,170	31,230	31,280	31,340	31,400	31,460	31,510	31,570	31,630	31,690	31,740	31,800	31,860	31,910	31,970	32,030	10
11	33,540	33,610	33,670	33,730	33,800	33,860	33,930	33,990	34,060	34,120	34,180	34,250	34,310	34,370	34,440	34,500	34,560	34,630	34,690	34,750	34,810	11
12	36,510	36,590	36,660	36,730	36,800	36,870	36,940	37,010	37,090	37,160	37,230	37,300	37,370	37,440	37,510	37,580	37,650	37,720	37,790	37,860	37,930	12
13	39,420	39,500	39,580	39,660	39,730	39,810	39,890	39,970	40,040	40,120	40,200	40,280	40,350	40,430	40,510	40,590	40,660	40,740	40,820	40,890	40,970	13
14	42,240	42,330	42,420	42,500	42,590	42,680	42,760	42,850	42,930	43,020	43,110	43,190	43,280	43,360	43,450	43,530	43,620	43,700	43,780	43,870	43,950	14
15	45,000	45,090	45,180	45,280	45,370	45,460	45,560	45,650	45,740	45,830	45,930	46,020	46,110	46,200	46,300	46,390	46,480	46,570	46,660	46,760	46,850	15
16	47,660	47,760	47,860	47,970	48,070	48,170	48,270	48,380	48,480	48,580	48,680	48,780	48,880	48,980	49,080	49,180	49,280	49,380	49,480	49,580	49,680	16
17	51,740	51,850	51,960	52,070	52,180	52,290	52,400	52,500	52,610	52,720	52,820	52,940	53,050	53,160	53,270	53,380	53,490	53,600	53,710	53,820	53,930	17
18	55,830	55,940	56,060	56,170	56,290	56,400	56,520	56,630	56,740	56,860	56,970	57,090	57,210	57,340	57,460	57,580	57,700	57,820	57,940	58,060	58,180	18
19	59,910	60,040	60,160	60,280	60,400	60,520	60,640	60,760	60,880	61,000	61,110	61,250	61,380	61,510	61,650	61,780	61,910	62,040	62,170	62,300	62,430	19
20	64,950	65,100	65,260	65,410	65,570	65,720	65,870	66,020	66,170	66,330	66,480	66,640	66,800	66,960	67,110	67,270	67,430	67,590	67,750	67,900	68,060	20
21	69,980	70,170	70,360	70,550	70,730	70,920	71,100	71,290	71,470	71,660	71,840	72,030	72,210	72,400	72,580	72,770	72,950	73,140	73,320	73,500	73,690	21
22	75,020	75,240	75,460	75,680	75,900	76,120	76,340	76,550	76,770	76,990	77,200	77,410	77,630	77,840	78,050	78,260	78,470	78,690	78,890	79,100	79,310	22
23	75,080	75,360	75,630	75,910	76,180	76,460	76,730	77,010	77,280	77,560	77,830	78,100	78,380	78,650	78,920	79,190	79,460	79,740	80,010	80,280	80,550	23
24	75,140	75,470	75,800	76,140	76,470	76,800	77,130	77,460	77,790	78,130	78,460	78,790	79,120	79,460	79,790	80,120	80,450	80,790	81,120	81,450	81,790	24
25	75,210	75,590	75,980	76,360	76,750	77,140	77,530	77,920	78,310	78,700	79,090	79,480	79,870	80,260	80,660	81,050	81,440	81,840	82,230	82,630	83,020	25
26	75,210	75,590	75,980	76,360	76,750	77,140	77,530	77,920	78,310	78,700	79,090	79,480	79,870	80,260	80,660	81,050	81,440	81,840	82,230	82,630	83,020	26
27	75,210	75,590	75,980	76,360	76,750	77,140	77,530	77,920	78,310	78,700	79,090	79,480	79,870	80,260	80,660	81,050	81,440	81,840	82,230	82,630	83,020	27
28	75,210	75,590	75,980	76,360	76,750	77,140	77,530	77,920	78,310	78,700	79,090	79,480	79,870	80,260	80,660	81,050	81,440	81,840	82,230	82,630	83,020	28

GATE ARRANGEMENT	HEADWATER ELEVATION																				GATE ARRANGEMENT
	806.0	806.1	806.2	806.3	806.4	806.5	806.6	806.7	806.8	806.9	807.0	807.1	807.2	807.3	807.4	807.5	807.6	807.7	807.8	807.9	808.0	
1	2,710	2,720	2,720	2,730	2,730	2,740	2,740	2,750	2,750	2,760	2,760	2,770	2,770	2,780	2,780	2,790	2,790	2,800	2,800	2,800	2,810	1
2	5,900	5,910	5,930	5,940	5,950	5,960	5,970	5,980	5,990	6,000	6,010	6,020	6,030	6,040	6,050	6,070	6,080	6,090	6,100	6,110	6,120	2
3	9,170	9,180	9,200	9,220	9,230	9,250	9,270	9,280	9,300	9,320	9,340	9,350	9,370	9,380	9,400	9,420	9,430	9,450	9,470	9,480	9,500	3
4	12,630	12,660	12,680	12,710	12,730	12,760	12,790	12,810	12,840	12,860	12,890	12,910	12,940	12,960	12,990	13,020	13,040	13,070	13,090	13,120	13,140	4
5	16,320	16,350	16,380	16,410	16,440	16,470	16,500	16,530	16,560	16,590	16,630	16,660	16,690	16,720	16,750	16,780	16,810	16,840	16,870	16,900	16,930	5
6	19,680	19,710	19,740	19,770	19,810	19,840	19,870	19,900	19,930	19,970	20,000	20,030	20,060	20,090	20,120	20,160	20,190	20,220	20,250	20,280	20,310	6
7	22,940	22,970	23,010	23,050	23,090	23,130	23,160	23,200	23,240	23,280	23,320	23,350	23,390	23,430	23,470	23,500	23,540	23,580	23,620	23,650	23,690	7
8	25,960	26,010	26,050	26,090	26,140	26,180	26,230	26,270	26,310	26,360	26,400	26,440	26,490	26,530	26,570	26,620	26,660	26,700	26,740	26,790	26,830	8
9	29,100	29,150	29,200	29,250	29,300	29,350	29,400	29,450	29,500	29,540	29,590	29,640	29,690	29,740	29,790	29,840	29,890	29,940	29,990	30,040	30,090	9
10	32,030	32,080	32,140	32,200	32,250	32,310	32,360	32,420	32,470	32,530	32,590	32,640	32,700	32,750	32,810	32,860	32,920	32,970	33,030	33,080	33,140	10
11	34,810	34,880	34,940	35,000	35,060	35,120	35,190	35,250	35,310	35,370	35,430	35,490	35,560	35,620	35,680	35,740	35,800	35,860	35,920	35,980	36,040	11
12	37,930	38,000	38,070	38,140	38,210	38,270	38,340	38,410	38,480	38,550	38,620	38,680	38,750	38,820	38,890	38,960	39,020	39,090	39,160	39,230	39,290	12
13	40,970	41,050	41,120	41,200	41,280	41,350	41,430	41,500	41,580	41,650	41,730	41,800	41,880	41,950	42,030	42,100	42,180	42,250	42,330	42,400	42,470	13
14	43,950	44,040	44,120	44,200	44,290	44,370	44,450	44,530	44,620	44,700	44,780	44,860	44,950	45,030	45,110	45,190	45,270	45,350	45,430	45,520	45,600	14
15	46,850	46,940	47,030	47,120	47,210	47,300	47,390	47,480	47,570	47,660	47,750	47,840	47,930	48,020	48,110	48,200	48,280	48,370	48,460	48,550	48,640	15
16	49,680	49,780	49,880	49,970	50,070	50,170	50,270	50,370	50,460	50,560	50,660	50,750	50,850	50,950	51,040	51,140	51,230	51,330	51,430	51,520	51,620	16
17	53,930	54,040	54,150	54,270	54,380	54,490	54,600	54,710	54,820	54,930	55,040	55,150	55,260	55,370	55,480	55,590	55,700	55,810	55,910	56,020	56,130	17
18	58,180	58,310	58,430	58,560	58,680	58,800	58,930	59,050	59,180	59,300	59,420	59,540	59,670	59,790	59,910	60,040	60,160	60,280	60,400	60,520	60,640	18
19	62,430	62,570	62,710	62,850	62,990	63,120	63,260	63,400	63,530	63,670	63,800	63,940	64,080	64,210	64,350	64,480	64,620	64,760	64,890	65,020	65,160	19
20	68,060	68,190	68,320	68,450	68,570	68,700	68,830	68,950	69,080	69,200	69,330	69,450	69,570	69,690	69,810	69,930	70,050	70,170	70,290	70,410	70,530	20
21	73,690	73,810	73,920	74,040	74,160	74,280	74,390	74,510	74,620	74,740	74,850	74,960	75,060	75,170	75,280	75,380	75,490	75,590	75,690	75,790	75,900	21
22	79,310	79,420	79,530	79,640	79,750	79,860	79,960	80,070	80,170	80,270	80,370	80,470	80,560	80,650	80,740	80,830	80,920	81,010	81,090	81,180	81,260	22
23	80,550	80,760	80,960	81,170	81,370	81,570	81,780	81,980	82,180	82,380	82,590	82,780	82,980	83,170	83,370	83,560	83,760	83,950	84,140	84,330	84,530	23
24	81,790	82,090	82,390	82,690	82,990	83,290	83,590	83,900	84,200	84,500	84,800	85,100	85,400	85,700	85,990	86,290	86,590	86,890	87,190	87,490	87,790	24
25	83,020	83,420	83,820	84,210	84,610	85,010	85,410	85,810	86,210	86,610	87,010	87,410	87,820	88,220	88,620	89,020	89,430	89,830	90,240	90,640	91,050	25
26	83,020	83,420	83,820	84,210	84,610	85,010	85,410	85,810	86,210	86,610	87,010	87,410	87,820	88,220	88,620	89,020	89,430	89,830	90,240	90,640	91,050	26
27	83,020	83,420	83,820	84,210	84,610	85,010	85,410	85,810	86,210	86,610	87,010	87,410	87,820	88,220	88,620	89,020	89,430	89,830	90,240	90,640	91,050	27
28	83,020	83,420	83,820	84,210	84,610	85,010	85,410	85,810	86,210	86,610	87,010	87,410	87,820	88,220	88,620	89,020	89,430	89,830	90,240	90,640	91,050	28

HEADWATER 804 to 808
TAILWATER 778.51 to 779.5

MAY 2008

TELLICO DAM
SPILLWAY DISCHARGE
IN CUBIC FEET PER SECOND

GATE ARRANGEMENT	HEADWATER ELEVATION																				GATE ARRANGEMENT
	808.0	808.1	808.2	808.3	808.4	808.5	808.6	808.7	808.8	808.9	809.0	809.1	809.2	809.3	809.4	809.5	809.6	809.7	809.8	809.9	810.0	
1	2,810	2,810	2,820	2,820	2,830	2,830	2,840	2,840	2,850	2,850	2,860	2,860	2,870	2,870	2,880	2,880	2,890	2,890	2,900	2,900	2,900	1
2	6,120	6,130	6,140	6,150	6,160	6,170	6,180	6,190	6,200	6,210	6,220	6,230	6,240	6,250	6,260	6,270	6,290	6,300	6,310	6,320	6,330	2
3	9,500	9,520	9,530	9,550	9,570	9,580	9,600	9,610	9,630	9,650	9,660	9,680	9,690	9,710	9,730	9,740	9,760	9,770	9,790	9,810	9,820	3
4	13,140	13,170	13,190	13,220	13,240	13,270	13,300	13,320	13,350	13,370	13,400	13,420	13,450	13,470	13,500	13,520	13,550	13,570	13,600	13,620	13,650	4
5	16,930	16,960	16,990	17,020	17,050	17,080	17,110	17,140	17,160	17,190	17,220	17,250	17,280	17,310	17,340	17,370	17,400	17,430	17,460	17,490	17,520	5
6	20,310	20,340	20,380	20,410	20,440	20,470	20,500	20,530	20,560	20,590	20,620	20,650	20,680	20,720	20,750	20,780	20,810	20,840	20,870	20,900	20,930	6
7	23,690	23,730	23,760	23,800	23,840	23,870	23,910	23,950	23,980	24,020	24,060	24,090	24,130	24,170	24,200	24,240	24,280	24,310	24,350	24,380	24,420	7
8	26,830	26,870	26,920	26,960	27,000	27,040	27,090	27,130	27,170	27,210	27,250	27,300	27,340	27,380	27,420	27,460	27,500	27,550	27,590	27,630	27,670	8
9	30,090	30,130	30,180	30,230	30,280	30,330	30,380	30,420	30,470	30,520	30,570	30,620	30,660	30,710	30,760	30,810	30,850	30,900	30,950	31,000	31,040	9
10	33,140	33,190	33,240	33,300	33,350	33,410	33,460	33,510	33,570	33,620	33,680	33,730	33,780	33,840	33,890	33,940	34,000	34,050	34,100	34,160	34,210	10
11	36,040	36,100	36,160	36,220	36,280	36,340	36,400	36,460	36,520	36,580	36,640	36,700	36,760	36,820	36,880	36,940	37,000	37,060	37,120	37,180	37,240	11
12	39,290	39,360	39,430	39,490	39,560	39,630	39,690	39,760	39,820	39,890	39,960	40,020	40,090	40,150	40,220	40,280	40,350	40,410	40,480	40,540	40,610	12
13	42,470	42,550	42,620	42,690	42,770	42,840	42,910	42,990	43,060	43,130	43,200	43,280	43,350	43,420	43,490	43,570	43,640	43,710	43,780	43,850	43,920	13
14	45,600	45,680	45,760	45,840	45,920	46,000	46,080	46,160	46,240	46,320	46,400	46,480	46,550	46,630	46,710	46,790	46,870	46,950	47,030	47,100	47,180	14
15	48,640	48,720	48,810	48,900	48,990	49,070	49,160	49,250	49,330	49,420	49,510	49,590	49,680	49,760	49,850	49,940	50,020	50,110	50,190	50,280	50,360	15
16	51,620	51,710	51,810	51,900	52,000	52,090	52,180	52,280	52,370	52,460	52,560	52,650	52,740	52,840	52,930	53,020	53,110	53,210	53,300	53,390	53,480	16
17	56,130	56,240	56,350	56,450	56,560	56,670	56,770	56,880	56,990	57,090	57,200	57,310	57,410	57,520	57,630	57,730	57,830	57,940	58,040	58,150	58,250	17
18	60,640	60,770	60,890	61,010	61,130	61,250	61,370	61,490	61,600	61,720	61,840	61,960	62,080	62,200	62,310	62,430	62,550	62,670	62,780	62,900	63,020	18
19	65,160	65,290	65,430	65,560	65,690	65,830	65,960	66,090	66,220	66,350	66,480	66,620	66,750	66,880	67,010	67,140	67,270	67,400	67,530	67,650	67,780	19
20	70,530	70,650	70,760	70,880	71,000	71,110	71,230	71,350	71,460	71,570	71,690	71,800	71,910	72,020	72,130	72,240	72,340	72,450	72,560	72,670	72,770	20
21	75,900	76,000	76,100	76,200	76,300	76,400	76,500	76,600	76,700	76,800	76,890	76,980	77,070	77,160	77,250	77,340	77,420	77,510	77,590	77,680	77,760	21
22	81,260	81,350	81,440	81,520	81,610	81,690	81,780	81,860	81,940	82,020	82,100	82,170	82,230	82,300	82,370	82,430	82,500	82,560	82,630	82,690	82,750	22
23	84,530	84,720	84,910	85,110	85,300	85,490	85,680	85,870	86,060	86,250	86,440	86,630	86,810	86,990	87,170	87,360	87,540	87,720	87,900	88,080	88,260	23
24	87,790	88,090	88,390	88,690	88,990	89,290	89,590	89,890	90,190	90,490	90,790	91,090	91,380	91,680	91,980	92,280	92,570	92,870	93,170	93,470	93,760	24
25	91,050	91,460	91,860	92,270	92,680	93,090	93,500	93,910	94,320	94,730	95,140	95,550	95,960	96,370	96,780	97,200	97,610	98,030	98,440	98,860	99,270	25
26	91,050	91,460	91,860	92,270	92,680	93,090	93,500	93,910	94,320	94,730	95,140	95,550	95,960	96,370	96,780	97,200	97,610	98,030	98,440	98,860	99,270	26
27	91,050	91,460	91,860	92,270	92,680	93,090	93,500	93,910	94,320	94,730	95,140	95,550	95,960	96,370	96,780	97,200	97,610	98,030	98,440	98,860	99,270	27
28	91,050	91,460	91,860	92,270	92,680	93,090	93,500	93,910	94,320	94,730	95,140	95,550	95,960	96,370	96,780	97,200	97,610	98,030	98,440	98,860	99,270	28

GATE ARRANGEMENT	HEADWATER ELEVATION																				GATE ARRANGEMENT
	810.0	810.1	810.2	810.3	810.4	810.5	810.6	810.7	810.8	810.9	811.0	811.1	811.2	811.3	811.4	811.5	811.6	811.7	811.8	811.9	812.0	
1	2,900	2,910	2,910	2,920	2,920	2,930	2,930	2,940	2,940	2,950	2,950	2,960	2,960	2,970	2,970	2,970	2,980	2,980	2,990	2,990	3,000	1
2	6,330	6,340	6,350	6,360	6,370	6,380	6,390	6,400	6,410	6,420	6,430	6,440	6,450	6,460	6,470	6,480	6,490	6,500	6,510	6,520	6,530	2
3	9,820	9,840	9,850	9,870	9,890	9,900	9,920	9,930	9,950	9,960	9,980	10,000	10,010	10,030	10,040	10,060	10,070	10,090	10,100	10,120	10,130	3
4	13,650	13,670	13,700	13,720	13,750	13,770	13,800	13,820	13,850	13,870	13,900	13,920	13,950	13,970	14,000	14,020	14,050	14,070	14,100	14,120	14,150	4
5	17,520	17,550	17,580	17,610	17,640	17,670	17,700	17,720	17,750	17,780	17,810	17,840	17,870	17,900	17,930	17,960	17,990	18,020	18,050	18,070	18,100	5
6	20,930	20,960	20,990	21,020	21,050	21,080	21,110	21,140	21,170	21,200	21,230	21,260	21,290	21,320	21,350	21,380	21,410	21,440	21,470	21,500	21,530	6
7	24,420	24,460	24,490	24,530	24,560	24,600	24,630	24,670	24,710	24,740	24,780	24,810	24,850	24,880	24,920	24,950	24,990	25,020	25,060	25,090	25,130	7
8	27,670	27,710	27,750	27,790	27,840	27,880	27,920	27,960	28,000	28,040	28,080	28,120	28,160	28,200	28,240	28,280	28,330	28,370	28,410	28,450	28,490	8
9	31,040	31,090	31,140	31,180	31,230	31,280	31,320	31,370	31,420	31,460	31,510	31,560	31,600	31,650	31,700	31,740	31,790	31,830	31,880	31,930	31,970	9
10	34,210	34,260	34,310	34,370	34,420	34,470	34,520	34,580	34,630	34,680	34,730	34,780	34,840	34,890	34,940	34,990	35,040	35,090	35,150	35,200	35,250	10
11	37,240	37,300	37,360	37,420	37,480	37,540	37,600	37,660	37,720	37,780	37,840	37,900	37,960	38,020	38,080	38,140	38,200	38,260	38,310	38,370	38,430	11
12	40,610	40,680	40,740	40,810	40,880	40,940	41,010	41,080	41,140	41,210	41,270	41,340	41,410	41,470	41,540	41,600	41,670	41,740	41,800	41,870	41,930	12
13	43,920	44,000	44,070	44,140	44,210	44,280	44,360	44,430	44,500	44,570	44,640	44,710	44,790	44,860	44,930	45,000	45,070	45,140	45,210	45,280	45,350	13
14	47,180	47,260	47,340	47,420	47,490	47,570	47,650	47,720	47,800	47,880	47,960	48,030	48,110	48,180	48,260	48,340	48,410	48,490	48,560	48,640	48,720	14
15	50,360	50,450	50,530	50,610	50,700	50,780	50,870	50,950	51,030	51,120	51,200	51,280	51,370	51,450	51,530	51,620	51,700	51,780	51,860	51,940	52,030	15
16	53,480	53,570	53,670	53,760	53,850	53,940	54,030	54,120	54,210	54,300	54,390	54,480	54,570	54,660	54,750	54,840	54,930	55,020	55,110	55,200	55,280	16
17	58,250	58,350	58,460	58,560	58,660	58,770	58,870	58,970	59,080	59,180	59,280	59,380	59,480	59,590	59,690	59,790	59,890	59,990	60,090	60,190	60,290	17
18	63,020	63,130	63,250	63,360	63,480	63,600	63,710	63,830	63,940	64,050	64,170	64,280	64,400	64,510	64,620	64,740	64,850	64,960	65,070	65,190	65,300	18
19	67,780	67,910	68,040	68,170	68,300	68,420	68,550	68,680	68,800	68,930	69,060	69,180	69,310	69,430	69,560	69,680	69,810	69,930	70,060	70,180	70,310	19
20	72,770	72,880	72,990	73,100	73,220	73,320	73,430	73,540	73,650	73,760	73,870	73,990	74,120	74,250	74,370	74,500	74,630	74,750	74,880	75,000	75,130	20
21	77,760	77,850	77,950	78,040	78,130	78,230	78,320	78,410	78,500	78,590	78,680	78,810	78,930	79,060	79,190	79,320	79,440	79,570	79,700	79,820	79,950	21
22	82,750	82,830	82,900	82,980	83,050	83,130	83,200	83,270	83,350	83,420	83,490	83,620	83,750	83,880	84,000	84,130	84,260	84,390	84,510	84,640	84,770	22
23	88,260	88,450	88,640	88,830	89,020	89,200	89,390	89,580	89,770	89,960	90,140	90,370	90,540	90,710	90,870	91,040	91,200	91,370	91,530	91,700	91,860	23
24	93,760	94,070	94,370	94,670	94,980	95,280	95,580	95,890	96,190	96,490	96,800	97,120	97,330	97,540	97,740	97,950	98,150	98,350	98,550	98,760	98,960	24
25	99,270	99,690	100,100	100,500	100,900	101,400	101,800	102,200	102,600	103,000	103,500	103,900	104,100	104,400	104,600	104,900	105,100	105,300	105,600	105,800	106,100	25
26	99,270	99,690	100,100	100,500	100,900	101,400	101,800	102,200	102,600	103,000	103,500	103,900	104,200	104,500	104,800	105,100	105,400	105,700	106,000	106,300	106,600	26
27	99,270	99,690	100,100	100,500	100,900	101,400	101,800	102,200	102,600	103,000	103,500	103,900	104,200	104,600	105,000	105,300	105,700	106,000	106,400	106,800	107,100	27
28	99,270	99,690	100,100	100,500	100,900	101,400	101,800	102,200	102,600	103,000	103,500	103,900	104,300	104,700	105,100	105,600	106,000	106,400	106,800	107,300	107,700	28

MAY 2008

HEADWATER 808 to 812
TAILWATER 778.51 to 779.5

TELLICO DAM
SPILLWAY DISCHARGE
IN CUBIC FEET PER SECOND

HEADWATER ELEVATION

GATE ARRANGEMENT	812.0	812.1	812.2	812.3	812.4	812.5	812.6	812.7	812.8	812.9	813.0	813.1	813.2	813.3	813.4	813.5	813.6	813.7	813.8	813.9	814.0	GATE ARRANGEMENT
1	3,000	3,000	3,010	3,010	3,020	3,020	3,020	3,030	3,030	3,040	3,040	3,050	3,050	3,060	3,060	3,060	3,070	3,070	3,080	3,080	3,090	1
2	6,530	6,540	6,550	6,560	6,570	6,580	6,590	6,600	6,610	6,620	6,630	6,630	6,640	6,650	6,660	6,670	6,680	6,690	6,700	6,710	6,720	2
3	10,130	10,150	10,160	10,180	10,200	10,210	10,230	10,240	10,260	10,270	10,290	10,300	10,320	10,330	10,350	10,360	10,380	10,390	10,410	10,420	10,440	3
4	14,150	14,170	14,190	14,220	14,240	14,270	14,290	14,320	14,340	14,370	14,390	14,410	14,440	14,460	14,490	14,510	14,540	14,560	14,580	14,610	14,630	4
5	18,100	18,130	18,160	18,190	18,220	18,240	18,270	18,300	18,330	18,350	18,380	18,410	18,440	18,470	18,490	18,520	18,550	18,580	18,600	18,630	18,660	5
6	21,530	21,560	21,590	21,620	21,650	21,670	21,700	21,730	21,760	21,790	21,820	21,850	21,880	21,910	21,940	21,970	21,990	22,020	22,050	22,080	22,110	6
7	25,130	25,160	25,200	25,230	25,270	25,300	25,340	25,370	25,410	25,440	25,480	25,510	25,540	25,580	25,610	25,650	25,680	25,720	25,750	25,780	25,820	7
8	28,490	28,530	28,570	28,610	28,650	28,690	28,730	28,770	28,810	28,850	28,890	28,920	28,960	29,000	29,040	29,080	29,120	29,160	29,200	29,240	29,280	8
9	31,970	32,020	32,060	32,110	32,150	32,200	32,250	32,290	32,340	32,380	32,430	32,470	32,520	32,560	32,610	32,650	32,700	32,740	32,790	32,830	32,870	9
10	35,250	35,300	35,350	35,400	35,450	35,500	35,550	35,610	35,660	35,710	35,760	35,810	35,860	35,910	35,960	36,010	36,060	36,110	36,160	36,210	36,260	10
11	38,430	38,490	38,550	38,610	38,670	38,720	38,780	38,840	38,900	38,950	39,010	39,070	39,130	39,180	39,240	39,300	39,360	39,410	39,470	39,530	39,580	11
12	41,930	41,990	42,060	42,120	42,180	42,240	42,310	42,370	42,430	42,490	42,550	42,620	42,680	42,750	42,810	42,880	42,940	43,000	43,070	43,130	43,190	12
13	45,350	45,420	45,490	45,560	45,630	45,700	45,760	45,830	45,900	45,970	46,040	46,100	46,170	46,230	46,300	46,360	46,430	46,490	46,560	46,620	46,690	13
14	48,720	48,790	48,870	48,940	49,020	49,090	49,170	49,240	49,320	49,390	49,460	49,540	49,610	49,690	49,760	49,830	49,910	49,980	50,060	50,130	50,200	14
15	52,030	52,110	52,190	52,270	52,350	52,430	52,520	52,600	52,680	52,760	52,840	52,920	53,000	53,080	53,160	53,240	53,320	53,400	53,480	53,560	53,640	15
16	55,280	55,370	55,460	55,550	55,640	55,730	55,810	55,900	55,990	56,080	56,160	56,250	56,340	56,420	56,510	56,600	56,680	56,770	56,860	56,940	57,030	16
17	60,290	60,390	60,490	60,590	60,690	60,790	60,890	60,990	61,090	61,190	61,290	61,390	61,480	61,580	61,680	61,780	61,880	61,970	62,070	62,170	62,260	17
18	65,300	65,410	65,520	65,630	65,750	65,860	65,970	66,080	66,190	66,300	66,410	66,520	66,630	66,740	66,850	66,960	67,070	67,180	67,280	67,390	67,500	18
19	70,310	70,430	70,550	70,680	70,800	70,920	71,040	71,170	71,290	71,410	71,530	71,650	71,770	71,900	72,020	72,140	72,260	72,380	72,500	72,620	72,740	19
20	75,130	75,260	75,390	75,520	75,650	75,780	75,910	76,040	76,170	76,290	76,420	76,560	76,690	76,820	76,960	77,090	77,220	77,360	77,490	77,620	77,750	20
21	79,950	80,080	80,220	80,360	80,500	80,630	80,770	80,910	81,040	81,180	81,310	81,460	81,610	81,750	81,900	82,050	82,190	82,340	82,480	82,630	82,770	21
22	84,770	84,910	85,060	85,200	85,350	85,490	85,630	85,780	85,920	86,060	86,200	86,360	86,520	86,680	86,840	87,000	87,160	87,320	87,470	87,630	87,790	22
23	91,860	91,970	92,070	92,180	92,280	92,380	92,490	92,590	92,690	92,790	92,890	93,000	93,110	93,220	93,320	93,430	93,540	93,650	93,750	93,860	93,960	23
24	98,960	99,020	99,090	99,150	99,220	99,280	99,340	99,400	99,460	99,510	99,570	99,630	99,690	99,750	99,810	99,860	99,920	99,970	100,000	100,100	100,100	24
25	106,100	106,100	106,100	106,100	106,200	106,200	106,200	106,200	106,200	106,200	106,300	106,300	106,300	106,300	106,300	106,300	106,300	106,300	106,300	106,300	106,300	25
26	106,600	106,800	106,900	107,100	107,200	107,400	107,500	107,700	107,800	108,000	108,200	108,300	108,500	108,600	108,800	108,900	109,000	109,200	109,300	109,500	109,600	26
27	107,100	107,400	107,700	108,000	108,300	108,600	108,900	109,200	109,500	109,800	110,100	110,300	110,600	110,900	111,200	111,500	111,800	112,100	112,400	112,700	112,900	27
28	107,700	108,100	108,500	109,000	109,400	109,800	110,200	110,700	111,100	111,500	112,000	112,400	112,800	113,200	113,700	114,100	114,500	115,000	115,400	115,800	116,300	28

HEADWATER ELEVATION

GATE ARRANGEMENT	814.0	814.1	814.2	814.3	814.4	814.5	814.6	814.7	814.8	814.9	815.0	815.1	815.2	815.3	815.4	815.5	815.6	815.7	815.8	815.9	816.0	GATE ARRANGEMENT
1	3,090	3,090	3,100	3,100	3,100	3,110	3,110	3,120	3,120	3,130	3,130	3,130	3,140	3,140	3,150	3,150						1
2	6,720	6,730	6,740	6,750	6,760	6,770	6,780	6,790	6,800	6,810	6,820	6,830	6,840	6,850	6,850	6,860	6,870	6,880	6,890	6,900	6,910	2
3	10,440	10,450	10,470	10,480	10,500	10,510	10,530	10,540	10,560	10,570	10,580	10,600	10,610	10,630	10,640	10,660	10,670	10,690	10,700	10,720	10,730	3
4	14,630	14,660	14,680	14,710	14,730	14,760	14,780	14,810	14,830	14,850	14,880	14,900	14,920	14,940	14,960	14,980	15,000	15,020	15,040	15,060	15,080	4
5	18,660	18,690	18,720	18,740	18,770	18,800	18,830	18,850	18,880	18,910	18,940	18,960	18,990	19,020	19,050	19,070	19,100	19,130	19,150	19,180	19,210	5
6	22,110	22,140	22,170	22,200	22,220	22,250	22,280	22,310	22,340	22,370	22,400	22,420	22,450	22,480	22,510	22,540	22,570	22,590	22,620	22,650	22,680	6
7	25,820	25,850	25,890	25,920	25,950	25,990	26,020	26,050	26,090	26,120	26,160	26,190	26,220	26,260	26,290	26,320	26,360	26,390	26,420	26,460	26,490	7
8	29,280	29,320	29,360	29,400	29,430	29,470	29,510	29,550	29,590	29,630	29,670	29,710	29,740	29,780	29,820	29,860	29,900	29,940	29,970	30,010	30,050	8
9	32,870	32,920	32,960	33,010	33,050	33,100	33,140	33,180	33,230	33,270	33,320	33,360	33,400	33,450	33,490	33,540	33,580	33,620	33,670	33,710	33,750	9
10	36,260	36,310	36,360	36,410	36,460	36,510	36,560	36,610	36,650	36,700	36,750	36,800	36,850	36,900	36,950	37,000	37,050	37,100	37,140	37,190	37,240	10
11	39,580	39,640	39,700	39,750	39,810	39,870	39,930	39,980	40,040	40,100	40,150	40,210	40,270	40,330	40,390	40,450	40,500	40,560	40,620	40,680	40,740	11
12	43,190	43,260	43,320	43,380	43,440	43,500	43,570	43,630	43,690	43,750	43,810	43,880	43,940	44,000	44,070	44,130	44,190	44,260	44,320	44,380	44,450	12
13	46,690	46,750	46,820	46,890	46,950	47,020	47,090	47,150	47,220	47,290	47,350	47,430	47,500	47,570	47,650	47,720	47,790	47,870	47,940	48,010	48,090	13
14	50,200	50,280	50,350	50,430	50,510	50,580	50,660	50,730	50,810	50,880	50,960	51,030	51,100	51,170	51,240	51,320	51,390	51,460	51,530	51,600	51,670	14
15	53,640	53,720	53,800	53,880	53,960	54,040	54,110	54,190	54,270	54,350	54,430	54,510	54,590	54,660	54,740	54,820	54,900	54,970	55,050	55,130	55,210	15
16	57,030	57,110	57,200	57,290	57,370	57,460	57,540	57,630	57,710	57,800	57,880	57,970	58,050	58,130	58,220	58,300	58,390	58,470	58,550	58,640	58,720	16
17	62,260	62,360	62,460	62,560	62,650	62,750	62,840	62,940	63,040	63,130	63,230	63,320	63,420	63,510	63,610	63,700	63,800	63,890	63,990	64,080	64,180	17
18	67,500	67,610	67,720	67,820	67,930	68,040	68,150	68,250	68,360	68,470	68,570	68,680	68,790	68,890	69,000	69,100	69,210	69,320	69,420	69,530	69,630	18
19	72,740	72,860	72,980	73,090	73,210	73,330	73,450	73,570	73,690	73,800	73,920	74,040	74,160	74,270	74,390	74,510	74,620	74,740	74,860	74,970	75,090	19
20	77,750	77,890	78,020	78,150	78,280	78,420	78,550	78,680	78,810	78,940	79,070	79,200	79,330	79,460	79,590	79,720	79,850	79,980	80,110	80,240	80,360	20
21	82,770	82,920	83,060	83,210	83,350	83,500	83,640	83,790	83,930	84,080	84,220	84,360	84,510	84,650	84,790	84,930	85,070	85,220	85,360	85,500	85,640	21
22	87,790	87,950	88,110	88,270	88,420	88,580	88,740	88,900	89,050	89,210	89,370	89,520	89,680	89,840	89,990	90,150	90,300	90,460	90,610	90,760	90,920	22
23	93,960	94,090	94,230	94,360	94,490	94,620	94,750	94,880	95,010	95,140	95,270	95,400	95,520	95,650	95,780	95,900	96,030	96,150	96,280	96,400	96,530	23
24	100,100	100,200	100,300	100,500	100,600	100,700	100,800	100,900	101,000	101,100	101,200	101,300	101,400	101,500	101,600	101,700	101,800	101,900	101,900	102,000	102,100	24
25	106,300	106,400	106,500	106,500	106,600	106,700	106,800	106,900	106,900	107,000	107,100	107,100	107,200	107,300	107,400	107,400	107,500	107,600	107,600	107,700	107,700	25
26	109,600	109,800	110,000	110,200	110,400	110,600	110,800	111,000	111,200	111,400	111,600	111,700	111,700	111,800	111,800	111,900	111,900	112,000	112,000	112,100	112,100	26
27	112,900	113,300	113,600	113,900	114,200	114,500	114,900	115,200	115,500	115,800	116,200	116,200	116,300	116,300	116,300	116,300	116,400	116,400	116,400	116,400	116,500	27
28	116,300	116,700	117,100	117,600	118,000	118,400	118,900	119,300	119,800	120,200	120,800	120,800	120,800	120,800	120,800	120,800	120,800	120,800	120,800	120,800	120,800	28

HEADWATER 812 to 816
TAILWATER 778.51 to 779.5

See special instruction for preventing gate overflow on page 2.

MAY 2008

TELLICO DAM
SPILLWAY DISCHARGE
IN CUBIC FEET PER SECOND

HEADWATER ELEVATION

GATE ARRANGEMENT	816.0	816.1	816.2	816.3	816.4	816.5	816.6	816.7	816.8	816.9	817.0	817.1	817.2	817.3	817.4	817.5	817.6	817.7	817.8	817.9	818.0	GATE ARRANGEMENT
1																						1
2	6,910	6,920	6,930																			2
3	10,730	10,750	10,760	10,770	10,790	10,800	10,820	10,830	10,850	10,860	10,870											3
4	15,080	15,100	15,120	15,130	15,150	15,170	15,190	15,210	15,220	15,240	15,260	15,460	15,820	16,280	16,830	17,450	18,130	18,880				4
5	19,210	19,230	19,260	19,280	19,300	19,330	19,350	19,370	19,400	19,420	19,440	19,650	20,010	20,480	21,030	21,650	22,350	23,100	23,920	24,790	25,720	5
6	22,680	22,710	22,730	22,760	22,790	22,820	22,850	22,870	22,900	22,930	22,960	23,170	23,530	24,000	24,560	25,190	25,890	26,650	27,470	28,340	29,280	6
7	26,490	26,520	26,560	26,590	26,620	26,650	26,690	26,720	26,750	26,790	26,820	27,040	27,410	27,880	28,440	29,080	29,780	30,550	31,370	32,250	33,190	7
8	30,050	30,090	30,130	30,160	30,200	30,240	30,280	30,320	30,350	30,390	30,430	30,650	31,030	31,510	32,070	32,710	33,420	34,190	35,020	35,910	36,850	8
9	33,750	33,800	33,840	33,880	33,930	33,970	34,010	34,060	34,100	34,140	34,180	34,410	34,790	35,280	35,850	36,490	37,210	37,980	38,820	39,710	40,650	9
10	37,240	37,290	37,340	37,390	37,430	37,480	37,530	37,580	37,630	37,670	37,720	37,950	38,340	38,830	39,410	40,060	40,770	41,560	42,400	43,290	44,240	10
11	40,740	40,800	40,860	40,910	40,970	41,030	41,090	41,150	41,210	41,270	41,330	41,570	41,970	42,470	43,060	43,720	44,450	45,240	46,100	47,000	47,970	11
12	44,450	44,510	44,580	44,640	44,700	44,770	44,830	44,900	44,960	45,020	45,090	45,330	45,730	46,240	46,830	47,490	48,230	49,020	49,880	50,790	51,750	12
13	48,090	48,160	48,220	48,290	48,360	48,430	48,490	48,560	48,630	48,700	48,760	49,010	49,420	49,930	50,520	51,190	51,920	52,720	53,580	54,490	55,460	13
14	51,670	51,740	51,820	51,890	51,960	52,030	52,100	52,170	52,240	52,310	52,380	52,630	53,040	53,550	54,140	54,810	55,550	56,350	57,210	58,120	59,090	14
15	55,210	55,280	55,360	55,440	55,510	55,590	55,670	55,740	55,820	55,900	55,970	56,230	56,650	57,170	57,770	58,450	59,190	60,000	60,870	61,790	62,770	15
16	58,720	58,800	58,890	58,970	59,050	59,140	59,220	59,300	59,380	59,470	59,550	59,810	60,240	60,760	61,370	62,050	62,800	63,620	64,490	65,420	66,410	16
17	64,180	64,270	64,360	64,460	64,550	64,640	64,740	64,830	64,920	65,020	65,110	65,390	65,820	66,350	66,970	67,670	68,430	69,250	70,140	71,080	72,070	17
18	69,630	69,740	69,840	69,940	70,050	70,150	70,260	70,360	70,460	70,570	70,670	70,960	71,400	71,950	72,580	73,280	74,050	74,890	75,780	76,740	77,740	18
19	75,090	75,200	75,320	75,430	75,550	75,660	75,780	75,890	76,010	76,120	76,230	76,530	76,980	77,540	78,180	78,900	79,680	80,520	81,430	82,390	83,410	19
20	80,360	80,490	80,620	80,750	80,870	81,000	81,130	81,260	81,380	81,510	81,640	81,950	82,410	82,980	83,630	84,360	85,150	86,010	86,930	87,900	88,930	20
21	85,640	85,780	85,920	86,060	86,200	86,340	86,480	86,620	86,760	86,900	87,040	87,360	87,840	88,420	89,080	89,820	90,630	91,500	92,430	93,420	94,460	21
22	90,920	91,070	91,220	91,380	91,530	91,680	91,830	91,990	92,140	92,290	92,440	92,770	93,260	93,860	94,530	95,290	96,110	96,990	97,930	98,930	99,980	22
23	96,530	96,670	96,810	96,960	97,100	97,240	97,380	97,520	97,660	97,810	97,950	98,270	98,750	99,330	100,000	100,700	101,500	102,400	103,300	104,300	105,400	23
24	102,100	102,300	102,400	102,500	102,700	102,800	102,900	103,100	103,200	103,300	103,500	103,800	104,200	104,800	105,500	106,200	107,000	107,800	108,800	109,700	110,800	24
25	107,700	107,900	108,000	108,100	108,200	108,400	108,500	108,600	108,700	108,800	109,000	109,300	109,700	110,300	110,900	111,600	112,400	113,300	114,200	115,100	116,200	25
26	112,100	112,200	112,300	112,400	112,500	112,500	112,600	112,700	112,800	112,900	112,900	113,200	113,600	114,200	114,800	115,500	116,200	117,000	117,900	118,800	119,800	26
27	116,500	116,500	116,600	116,600	116,700	116,700	116,800	116,800	116,800	116,900	116,900	117,200	117,600	118,100	118,600	119,300	120,000	120,800	121,600	122,500	123,500	27
28	120,800	120,800	120,900	120,900	120,900	120,900	120,900	120,900	120,900	120,900	120,900	121,100	121,500	121,900	122,500	123,100	123,800	124,500	125,300	126,200	127,100	28

HEADWATER ELEVATION

GATE ARRANGEMENT	818.0	818.1	818.2	818.3	818.4	818.5	818.6	818.7	818.8	818.9	819.0	819.1	819.2	819.3	819.4	819.5	819.6	819.7	819.8	819.9	820.0	GATE ARRANGEMENT
1																						1
2																						2
3																						3
4																						4
5	25,720	26,700	27,730	28,800	29,930																	5
6	29,280	30,260	31,290	32,370	33,500	34,680	35,900	37,160	38,470	39,820	41,210	42,640										6
7	33,190	34,180	35,210	36,300	37,430	38,610	39,840	41,110	42,420	43,770	45,170	46,610	48,090	49,610	51,170	52,760	54,400	56,070	57,780			7
8	36,850	37,840	38,880	39,970	41,110	42,300	43,530	44,800	46,120	47,480	48,880	50,320	51,800	53,330	54,890	56,490	58,130	59,810	61,530	63,280	65,070	8
9	40,650	41,650	42,700	43,790	44,940	46,130	47,360	48,640	49,960	51,330	52,740	54,180	55,670	57,200	58,770	60,380	62,020	63,700	65,420	67,180	68,980	9
10	44,240	45,240	46,300	47,400	48,550	49,740	50,980	52,260	53,590	54,960	56,370	57,830	59,320	60,850	62,430	64,040	65,690	67,380	69,100	70,860	72,660	10
11	47,970	48,990	50,060	51,180	52,350	53,560	54,820	56,120	57,470	58,860	60,290	61,760	63,270	64,810	66,400	68,030	69,690	71,400	73,140	74,910	76,730	11
12	51,750	52,780	53,850	54,970	56,140	57,360	58,620	59,930	61,280	62,670	64,100	65,580	67,100	68,650	70,250	71,880	73,560	75,270	77,020	78,810	80,630	12
13	55,460	56,490	57,560	58,690	59,860	61,080	62,350	63,650	65,010	66,400	67,840	69,310	70,830	72,390	73,990	75,630	77,300	79,020	80,770	82,560	84,380	13
14	59,090	60,120	61,200	62,320	63,500	64,720	65,980	67,290	68,640	70,040	71,470	72,950	74,460	76,020	77,610	79,240	80,920	82,620	84,370	86,160	87,980	14
15	62,770	63,800	64,880	66,010	67,190	68,410	69,680	70,990	72,340	73,740	75,180	76,660	78,180	79,740	81,340	82,980	84,660	86,370	88,130	89,920	91,740	15
16	66,410	67,440	68,530	69,660	70,850	72,070	73,350	74,670	76,030	77,430	78,870	80,360	81,890	83,450	85,060	86,700	88,390	90,110	91,870	93,660	95,500	16
17	72,070	73,120	74,220	75,360	76,550	77,790	79,080	80,400	81,780	83,190	84,640	86,140	87,680	89,250	90,870	92,520	94,220	95,950	97,720	99,520	101,400	17
18	77,740	78,800	79,900	81,060	82,260	83,510	84,810	86,140	87,520	88,950	90,410	91,920	93,470	95,050	96,680	98,340	100,000	101,800	103,600	105,400	107,200	18
19	83,410	84,470	85,590	86,760	87,970	89,230	90,530	91,880	93,270	94,710	96,180	97,700	99,260	100,900	102,500	104,200	105,900	107,600	109,400	111,200	113,100	19
20	88,930	90,010	91,140	92,320	93,540	94,810	96,130	97,490	98,890	100,300	101,800	103,400	104,900	106,500	108,200	109,900	111,600	113,400	115,200	117,000	118,900	20
21	94,460	95,550	96,690	97,880	99,110	100,400	101,700	103,100	104,500	106,000	107,500	109,000	110,600	112,200	113,900	115,600	117,300	119,100	120,900	122,700	124,600	21
22	99,980	101,100	102,200	103,400	104,700	106,000	107,300	108,700	110,100	111,600	113,100	114,700	116,300	117,900	119,600	121,300	123,000	124,800	126,600	128,500	130,400	22
23	105,400	106,500	107,600	108,800	110,100	111,400	112,700	114,100	115,500	117,000	118,500	120,100	121,700	123,300	125,000	126,700	128,400	130,200	132,100	133,900	135,800	23
24	110,800	111,900	113,000	114,200	115,500	116,800	118,100	119,500	121,000	122,400	123,900	125,500	127,100	128,700	130,400	132,100	133,900	135,700	137,500	139,400	141,300	24
25	116,200	117,300	118,400	119,600	120,900	122,200	123,500	124,900	126,400	127,800	129,400	130,900	132,500	134,200	135,800	137,500	139,300	141,100	142,900	144,800	146,700	25
26	119,800	120,900	122,100	123,300	124,600	125,900	127,300	128,700	130,200	131,700	133,200	134,800	136,400	138,000	139,700	141,500	143,200	145,000	146,900	148,800	150,700	26
27	123,500	124,600	125,800	127,100	128,300	129,700	131,100	132,500	134,000	135,500	137,000	138,600	140,200	141,900	143,600	145,400	147,200	149,000	150,900	152,800	154,700	27
28	127,100	128,300	129,500	130,800	132,100	133,400	134,800	136,300	137,800	139,300	140,900	142,500	144,100	145,800	147,500	149,300	151,100	153,000	154,800	156,800	158,700	28

MAY 2008

See special instruction for preventing gate overflow on page 2.

HEADWATER 816 to 820
TAILWATER 778.51 to 779.5

TELLICO DAM
SPILLWAY DISCHARGE
IN CUBIC FEET PER SECOND

GATE ARRANGEMENT	HEADWATER ELEVATION																				GATE ARRANGEMENT
	800.0	800.1	800.2	800.3	800.4	800.5	800.6	800.7	800.8	800.9	801.0	801.1	801.2	801.3	801.4	801.5	801.6	801.7	801.8	801.9	802.0	
1	2,330	2,340	2,340	2,350	2,360	2,360	2,370	2,370	2,380	2,380	2,390	2,400	2,400	2,410	2,410	2,420	2,420	2,430	2,430	2,440	2,450	1
2	5,060	5,080	5,090	5,100	5,110	5,130	5,140	5,150	5,160	5,180	5,190	5,200	5,210	5,230	5,240	5,250	5,260	5,280	5,290	5,300	5,310	2
3	7,870	7,890	7,910	7,930	7,950	7,970	7,990	8,010	8,030	8,050	8,070	8,090	8,110	8,120	8,140	8,160	8,180	8,200	8,220	8,240	8,260	3
4	10,650	10,680	10,710	10,730	10,760	10,790	10,820	10,840	10,870	10,900	10,920	10,950	10,980	11,010	11,030	11,060	11,090	11,110	11,140	11,170	11,190	4
5	13,970	14,000	14,030	14,070	14,100	14,140	14,170	14,210	14,240	14,270	14,310	14,340	14,370	14,410	14,440	14,480	14,510	14,540	14,580	14,610	14,640	5
6	17,120	17,160	17,200	17,240	17,280	17,320	17,350	17,390	17,430	17,470	17,510	17,550	17,590	17,620	17,660	17,700	17,740	17,780	17,820	17,850	17,890	6
7	20,120	20,170	20,210	20,260	20,300	20,350	20,390	20,440	20,480	20,530	20,570	20,620	20,660	20,700	20,750	20,790	20,840	20,880	20,920	20,970	21,010	7
8	22,980	23,030	23,080	23,130	23,180	23,230	23,280	23,330	23,380	23,430	23,480	23,530	23,580	23,630	23,680	23,730	23,780	23,830	23,880	23,920	23,970	8
9	25,730	25,790	25,850	25,910	25,960	26,020	26,080	26,130	26,190	26,250	26,300	26,360	26,420	26,470	26,530	26,580	26,640	26,690	26,750	26,810	26,860	9
10	28,320	28,390	28,450	28,520	28,580	28,640	28,710	28,770	28,830	28,900	28,960	29,020	29,090	29,150	29,210	29,270	29,340	29,400	29,460	29,520	29,580	10
11	30,830	30,900	30,970	31,040	31,110	31,180	31,250	31,320	31,390	31,460	31,530	31,600	31,670	31,740	31,810	31,880	31,940	32,010	32,080	32,150	32,220	11
12	33,560	33,630	33,700	33,780	33,850	33,920	34,000	34,070	34,140	34,220	34,290	34,360	34,440	34,520	34,590	34,670	34,750	34,820	34,900	34,970	35,050	12
13	36,170	36,250	36,330	36,420	36,500	36,580	36,660	36,740	36,820	36,890	36,970	37,060	37,140	37,230	37,310	37,390	37,480	37,560	37,640	37,720	37,810	13
14	38,690	38,780	38,870	38,960	39,050	39,140	39,230	39,320	39,400	39,490	39,580	39,670	39,760	39,850	39,940	40,030	40,120	40,210	40,300	40,390	40,480	14
15	41,120	41,220	41,320	41,420	41,520	41,610	41,710	41,810	41,910	42,000	42,100	42,200	42,300	42,400	42,490	42,590	42,690	42,790	42,880	42,980	43,070	15
16	43,470	43,580	43,680	43,790	43,900	44,010	44,110	44,220	44,320	44,430	44,540	44,640	44,750	44,860	44,960	45,070	45,170	45,280	45,380	45,490	45,590	16
17	47,400	47,520	47,630	47,750	47,860	47,980	48,090	48,200	48,320	48,430	48,540	48,650	48,760	48,870	48,980	49,090	49,200	49,310	49,420	49,530	49,640	17
18	51,340	51,460	51,590	51,710	51,830	51,950	52,070	52,190	52,310	52,430	52,550	52,660	52,780	52,890	53,010	53,120	53,230	53,350	53,460	53,570	53,680	18
19	55,270	55,410	55,540	55,670	55,800	55,920	56,050	56,180	56,300	56,430	56,550	56,670	56,790	56,910	57,030	57,150	57,260	57,380	57,500	57,610	57,720	19
20	56,920	57,120	57,330	57,540	57,750	57,950	58,160	58,370	58,570	58,780	58,980	59,190	59,390	59,590	59,790	60,000	60,200	60,400	60,600	60,800	61,000	20
21	58,560	58,840	59,130	59,410	59,700	59,980	60,270	60,560	60,840	61,130	61,410	61,700	61,990	62,270	62,560	62,840	63,130	63,420	63,700	63,990	64,280	21
22	60,200	60,560	60,920	61,290	61,650	62,010	62,380	62,740	63,110	63,480	63,850	64,210	64,580	64,950	65,320	65,690	66,070	66,440	66,810	67,180	67,560	22
23	60,200	60,560	60,920	61,290	61,650	62,010	62,380	62,740	63,110	63,480	63,850	64,210	64,580	64,950	65,320	65,690	66,070	66,440	66,810	67,180	67,560	23
24	60,200	60,560	60,920	61,290	61,650	62,010	62,380	62,740	63,110	63,480	63,850	64,210	64,580	64,950	65,320	65,690	66,070	66,440	66,810	67,180	67,560	24
25	60,200	60,560	60,920	61,290	61,650	62,010	62,380	62,740	63,110	63,480	63,850	64,210	64,580	64,950	65,320	65,690	66,070	66,440	66,810	67,180	67,560	25
26	60,200	60,560	60,920	61,290	61,650	62,010	62,380	62,740	63,110	63,480	63,850	64,210	64,580	64,950	65,320	65,690	66,070	66,440	66,810	67,180	67,560	26
27	60,200	60,560	60,920	61,290	61,650	62,010	62,380	62,740	63,110	63,480	63,850	64,210	64,580	64,950	65,320	65,690	66,070	66,440	66,810	67,180	67,560	27
28	60,200	60,560	60,920	61,290	61,650	62,010	62,380	62,740	63,110	63,480	63,850	64,210	64,580	64,950	65,320	65,690	66,070	66,440	66,810	67,180	67,560	28

GATE ARRANGEMENT	HEADWATER ELEVATION																				GATE ARRANGEMENT
	802.0	802.1	802.2	802.3	802.4	802.5	802.6	802.7	802.8	802.9	803.0	803.1	803.2	803.3	803.4	803.5	803.6	803.7	803.8	803.9	804.0	
1	2,450	2,450	2,460	2,460	2,470	2,470	2,480	2,480	2,490	2,500	2,500	2,510	2,510	2,520	2,520	2,530	2,530	2,540	2,540	2,550	2,550	1
2	5,310	5,320	5,340	5,350	5,360	5,370	5,380	5,400	5,410	5,420	5,430	5,440	5,450	5,470	5,480	5,490	5,500	5,510	5,520	5,540	5,550	2
3	8,260	8,280	8,290	8,310	8,330	8,350	8,370	8,390	8,410	8,420	8,440	8,460	8,480	8,500	8,520	8,530	8,550	8,570	8,590	8,610	8,620	3
4	11,190	11,220	11,250	11,270	11,300	11,330	11,350	11,380	11,410	11,430	11,460	11,490	11,510	11,540	11,570	11,590	11,620	11,650	11,670	11,700	11,720	4
5	14,640	14,680	14,710	14,740	14,780	14,810	14,840	14,880	14,910	14,940	14,980	15,010	15,040	15,080	15,110	15,140	15,170	15,210	15,240	15,270	15,300	5
6	17,890	17,930	17,970	18,010	18,040	18,080	18,120	18,160	18,190	18,230	18,270	18,300	18,340	18,380	18,420	18,450	18,490	18,530	18,560	18,600	18,640	6
7	21,010	21,060	21,100	21,140	21,190	21,230	21,270	21,320	21,360	21,400	21,440	21,490	21,530	21,570	21,620	21,660	21,700	21,740	21,780	21,830	21,870	7
8	23,970	24,020	24,070	24,120	24,170	24,220	24,260	24,310	24,360	24,410	24,460	24,500	24,550	24,600	24,650	24,690	24,740	24,790	24,840	24,880	24,930	8
9	26,860	26,920	26,970	27,030	27,080	27,140	27,190	27,250	27,300	27,350	27,410	27,460	27,520	27,570	27,630	27,680	27,730	27,790	27,840	27,890	27,950	9
10	29,580	29,650	29,710	29,770	29,830	29,890	29,950	30,010	30,080	30,140	30,200	30,260	30,320	30,380	30,440	30,500	30,560	30,620	30,680	30,740	30,800	10
11	32,220	32,280	32,350	32,420	32,480	32,550	32,620	32,690	32,750	32,820	32,880	32,950	33,020	33,080	33,150	33,210	33,280	33,340	33,410	33,480	33,540	11
12	35,050	35,120	35,200	35,270	35,350	35,420	35,500	35,570	35,650	35,720	35,790	35,870	35,940	36,010	36,080	36,160	36,230	36,300	36,370	36,440	36,510	12
13	37,810	37,890	37,970	38,050	38,130	38,210	38,290	38,380	38,460	38,540	38,620	38,700	38,780	38,860	38,940	39,020	39,100	39,180	39,260	39,340	39,420	13
14	40,480	40,570	40,660	40,750	40,840	40,930	41,020	41,110	41,200	41,280	41,370	41,460	41,550	41,640	41,720	41,810	41,900	41,980	42,070	42,160	42,240	14
15	43,070	43,170	43,270	43,370	43,460	43,560	43,650	43,750	43,840	43,940	44,040	44,130	44,230	44,330	44,420	44,520	44,610	44,710	44,810	44,900	45,000	15
16	45,590	45,700	45,800	45,910	46,010	46,110	46,220	46,320	46,420	46,530	46,630	46,730	46,840	46,940	47,040	47,150	47,250	47,350	47,450	47,560	47,660	16
17	49,640	49,750	49,850	49,960	50,070	50,180	50,280	50,390	50,490	50,600	50,700	50,810	50,910	51,020	51,120	51,230	51,330	51,440	51,540	51,640	51,740	17
18	53,680	53,790	53,900	54,020	54,130	54,240	54,350	54,450	54,560	54,670	54,780	54,890	54,990	55,100	55,200	55,310	55,410	55,520	55,620	55,730	55,830	18
19	57,720	57,840	57,960	58,070	58,180	58,300	58,410	58,520	58,630	58,740	58,850	58,960	59,070	59,180	59,290	59,390	59,500	59,600	59,710	59,810	59,910	19
20	61,000	61,200	61,410	61,610	61,810	62,010	62,210	62,410	62,610	62,810	63,010	63,210	63,410	63,610	63,810	64,010	64,200	64,400	64,600	64,800	64,950	20
21	64,280	64,570	64,860	65,140	65,430	65,720	66,010	66,300	66,590	66,880	67,170	67,460	67,750	68,040	68,330	68,620	68,910	69,200	69,490	69,780	69,980	21
22	67,560	67,930	68,310	68,680	69,060	69,440	69,810	70,190	70,570	70,950	71,330	71,710	72,090	72,470	72,850	73,240	73,620	74,000	74,390	74,770	75,020	22
23	67,560	67,930	68,310	68,680	69,060	69,440	69,810	70,190	70,570	70,950	71,330	71,710	72,090	72,470	72,850	73,240	73,620	74,000	74,390	74,770	75,060	23
24	67,560	67,930	68,310	68,680	69,060	69,440	69,810	70,190	70,570	70,950	71,330	71,710	72,090	72,470	72,850	73,240	73,620	74,000	74,390	74,770	75,110	24
25	67,560	67,930	68,310	68,680	69,060	69,440	69,810	70,190	70,570	70,950	71,330	71,710	72,090	72,470	72,850	73,240	73,620	74,000	74,390	74,770	75,160	25
26	67,560	67,930	68,310	68,680	69,060	69,440	69,810	70,190	70,570	70,950	71,330	71,710	72,090	72,470	72,850	73,240	73,620	74,000	74,390	74,770	75,160	26
27	67,560	67,930	68,310	68,680	69,060	69,440	69,810	70,190	70,570	70,950	71,330	71,710	72,090	72,470	72,850	73,240	73,620	74,000	74,390	74,770	75,160	27
28	67,560	67,930	68,310	68,680	69,060	69,440	69,810	70,190	70,570	70,950	71,330	71,710	72,090	72,470	72,850	73,240	73,620	74,000	74,390	74,770	75,160	28

HEADWATER 800 to 804
TAILWATER 779.51 to 780.5

MAY 2008

TELLICO DAM
SPILLWAY DISCHARGE
IN CUBIC FEET PER SECOND

HEADWATER ELEVATION

GATE ARRANGEMENT	804.0	804.1	804.2	804.3	804.4	804.5	804.6	804.7	804.8	804.9	805.0	805.1	805.2	805.3	805.4	805.5	805.6	805.7	805.8	805.9	806.0	GATE ARRANGEMENT
1	2,550	2,560	2,570	2,570	2,580	2,580	2,590	2,590	2,600	2,600	2,610	2,610	2,620	2,620	2,630	2,630	2,640	2,640	2,650	2,650	2,660	1
2	5,550	5,560	5,570	5,580	5,590	5,610	5,620	5,630	5,640	5,650	5,660	5,670	5,680	5,700	5,710	5,720	5,730	5,740	5,750	5,760	5,770	2
3	8,620	8,640	8,660	8,680	8,700	8,710	8,730	8,750	8,770	8,780	8,800	8,820	8,840	8,850	8,870	8,890	8,910	8,920	8,940	8,960	8,980	3
4	11,720	11,750	11,780	11,800	11,830	11,850	11,880	11,910	11,930	11,960	11,980	12,010	12,040	12,060	12,090	12,110	12,140	12,160	12,190	12,210	12,240	4
5	15,300	15,340	15,370	15,400	15,430	15,470	15,500	15,530	15,560	15,590	15,620	15,660	15,690	15,720	15,750	15,780	15,810	15,840	15,880	15,910	15,940	5
6	18,640	18,670	18,710	18,750	18,780	18,820	18,850	18,890	18,930	18,960	19,000	19,030	19,070	19,100	19,140	19,170	19,210	19,240	19,280	19,310	19,350	6
7	21,870	21,910	21,950	21,990	22,040	22,080	22,120	22,160	22,200	22,240	22,280	22,330	22,370	22,410	22,450	22,490	22,530	22,570	22,610	22,650	22,690	7
8	24,930	24,980	25,020	25,070	25,120	25,160	25,210	25,260	25,300	25,350	25,400	25,440	25,490	25,540	25,580	25,630	25,670	25,720	25,760	25,810	25,860	8
9	27,950	28,000	28,050	28,110	28,160	28,210	28,260	28,320	28,370	28,420	28,470	28,530	28,580	28,630	28,680	28,730	28,790	28,840	28,890	28,940	28,990	9
10	30,800	30,860	30,920	30,980	31,030	31,090	31,150	31,210	31,270	31,330	31,380	31,440	31,500	31,560	31,620	31,670	31,730	31,790	31,850	31,900	31,960	10
11	33,540	33,610	33,670	33,730	33,800	33,860	33,930	33,990	34,060	34,120	34,180	34,250	34,310	34,370	34,440	34,500	34,560	34,630	34,690	34,750	34,810	11
12	36,510	36,590	36,660	36,730	36,800	36,870	36,940	37,010	37,090	37,160	37,230	37,300	37,370	37,440	37,510	37,580	37,650	37,720	37,790	37,860	37,930	12
13	39,420	39,500	39,580	39,660	39,730	39,810	39,890	39,970	40,040	40,120	40,200	40,280	40,350	40,430	40,510	40,590	40,660	40,740	40,820	40,890	40,970	13
14	42,240	42,330	42,420	42,500	42,590	42,680	42,760	42,850	42,930	43,020	43,110	43,190	43,280	43,360	43,450	43,530	43,620	43,700	43,780	43,870	43,950	14
15	45,000	45,090	45,180	45,280	45,370	45,460	45,560	45,650	45,740	45,830	45,930	46,020	46,110	46,200	46,300	46,390	46,480	46,570	46,660	46,760	46,850	15
16	47,660	47,760	47,860	47,970	48,070	48,170	48,270	48,380	48,480	48,580	48,680	48,780	48,880	48,980	49,080	49,180	49,280	49,380	49,480	49,580	49,680	16
17	51,740	51,850	51,960	52,070	52,180	52,290	52,400	52,500	52,610	52,720	52,820	52,940	53,050	53,160	53,270	53,380	53,490	53,600	53,710	53,820	53,930	17
18	55,830	55,940	56,060	56,170	56,290	56,400	56,520	56,630	56,740	56,860	56,970	57,090	57,210	57,340	57,460	57,580	57,700	57,820	57,940	58,060	58,180	18
19	59,910	60,040	60,160	60,280	60,400	60,520	60,640	60,760	60,880	61,000	61,110	61,250	61,380	61,510	61,650	61,780	61,910	62,040	62,170	62,300	62,430	19
20	64,950	65,100	65,260	65,410	65,570	65,720	65,870	66,020	66,170	66,330	66,480	66,640	66,800	66,960	67,110	67,270	67,430	67,590	67,750	67,900	68,060	20
21	69,980	70,170	70,360	70,550	70,730	70,920	71,100	71,290	71,470	71,660	71,840	72,030	72,210	72,400	72,580	72,770	72,950	73,140	73,320	73,500	73,690	21
22	75,020	75,240	75,460	75,680	75,900	76,120	76,340	76,550	76,770	76,990	77,200	77,410	77,630	77,840	78,050	78,260	78,470	78,690	78,890	79,100	79,310	22
23	75,060	75,340	75,620	75,890	76,170	76,440	76,720	76,990	77,270	77,540	77,810	78,090	78,360	78,630	78,900	79,180	79,450	79,720	79,990	80,260	80,530	23
24	75,110	75,440	75,770	76,100	76,440	76,770	77,100	77,430	77,760	78,090	78,430	78,760	79,090	79,420	79,760	80,090	80,420	80,760	81,090	81,420	81,760	24
25	75,160	75,540	75,930	76,320	76,700	77,090	77,480	77,870	78,260	78,650	79,040	79,430	79,820	80,220	80,610	81,000	81,400	81,790	82,190	82,580	82,980	25
26	75,160	75,540	75,930	76,320	76,700	77,090	77,480	77,870	78,260	78,650	79,040	79,430	79,820	80,220	80,610	81,000	81,400	81,790	82,190	82,580	82,980	26
27	75,160	75,540	75,930	76,320	76,700	77,090	77,480	77,870	78,260	78,650	79,040	79,430	79,820	80,220	80,610	81,000	81,400	81,790	82,190	82,580	82,980	27
28	75,160	75,540	75,930	76,320	76,700	77,090	77,480	77,870	78,260	78,650	79,040	79,430	79,820	80,220	80,610	81,000	81,400	81,790	82,190	82,580	82,980	28

HEADWATER ELEVATION

GATE ARRANGEMENT	806.0	806.1	806.2	806.3	806.4	806.5	806.6	806.7	806.8	806.9	807.0	807.1	807.2	807.3	807.4	807.5	807.6	807.7	807.8	807.9	808.0	GATE ARRANGEMENT
1	2,660	2,660	2,670	2,670	2,680	2,680	2,690	2,690	2,700	2,700	2,710	2,710	2,720	2,720	2,730	2,730	2,740	2,740	2,750	2,750	2,760	1
2	5,770	5,790	5,800	5,810	5,820	5,830	5,840	5,850	5,860	5,870	5,880	5,900	5,910	5,920	5,930	5,940	5,950	5,960	5,970	5,980	5,990	2
3	8,980	8,990	9,010	9,030	9,050	9,060	9,080	9,100	9,110	9,130	9,150	9,160	9,180	9,200	9,220	9,230	9,250	9,270	9,280	9,300	9,320	3
4	12,240	12,270	12,290	12,320	12,340	12,370	12,390	12,420	12,440	12,470	12,490	12,520	12,540	12,570	12,590	12,620	12,640	12,670	12,690	12,720	12,740	4
5	15,940	15,970	16,000	16,030	16,060	16,090	16,120	16,160	16,190	16,220	16,250	16,280	16,310	16,340	16,370	16,400	16,430	16,460	16,490	16,520	16,550	5
6	19,350	19,380	19,420	19,450	19,490	19,520	19,560	19,590	19,630	19,660	19,690	19,730	19,760	19,800	19,830	19,860	19,900	19,930	19,960	20,000	20,030	6
7	22,690	22,730	22,770	22,810	22,850	22,890	22,930	22,970	23,010	23,050	23,090	23,130	23,170	23,210	23,250	23,290	23,330	23,370	23,400	23,440	23,480	7
8	25,860	25,900	25,950	25,990	26,040	26,080	26,130	26,170	26,220	26,260	26,310	26,350	26,400	26,440	26,490	26,530	26,580	26,620	26,660	26,710	26,750	8
9	28,990	29,040	29,100	29,150	29,200	29,250	29,300	29,350	29,400	29,450	29,500	29,550	29,600	29,650	29,700	29,750	29,810	29,860	29,910	29,960	30,000	9
10	31,960	32,020	32,080	32,130	32,190	32,250	32,300	32,360	32,420	32,470	32,530	32,580	32,640	32,700	32,750	32,810	32,860	32,920	32,980	33,030	33,090	10
11	34,810	34,880	34,940	35,000	35,060	35,120	35,190	35,250	35,310	35,370	35,430	35,490	35,560	35,620	35,680	35,740	35,800	35,860	35,920	35,980	36,040	11
12	37,930	38,000	38,070	38,140	38,210	38,270	38,340	38,410	38,480	38,550	38,620	38,680	38,750	38,820	38,890	38,960	39,020	39,090	39,160	39,230	39,290	12
13	40,970	41,050	41,120	41,200	41,280	41,350	41,430	41,500	41,580	41,650	41,730	41,800	41,880	41,950	42,030	42,100	42,180	42,250	42,330	42,400	42,470	13
14	43,950	44,040	44,120	44,200	44,290	44,370	44,450	44,530	44,620	44,700	44,780	44,860	44,950	45,030	45,110	45,190	45,270	45,350	45,430	45,520	45,600	14
15	46,850	46,940	47,030	47,120	47,210	47,300	47,390	47,480	47,570	47,660	47,750	47,840	47,930	48,020	48,110	48,200	48,280	48,370	48,460	48,550	48,640	15
16	49,680	49,780	49,880	49,970	50,070	50,170	50,270	50,370	50,460	50,560	50,660	50,750	50,850	50,950	51,040	51,140	51,230	51,330	51,430	51,520	51,620	16
17	53,930	54,040	54,150	54,270	54,380	54,490	54,600	54,710	54,820	54,930	55,040	55,150	55,260	55,370	55,480	55,590	55,700	55,810	55,910	56,020	56,130	17
18	58,180	58,310	58,430	58,560	58,680	58,800	58,930	59,050	59,180	59,300	59,420	59,540	59,670	59,790	59,910	60,040	60,160	60,280	60,400	60,520	60,640	18
19	62,430	62,570	62,710	62,850	62,990	63,120	63,260	63,400	63,530	63,670	63,800	63,940	64,080	64,210	64,350	64,480	64,620	64,760	64,890	65,020	65,160	19
20	68,060	68,190	68,320	68,450	68,570	68,700	68,830	68,950	69,080	69,200	69,330	69,450	69,570	69,690	69,810	69,930	70,050	70,170	70,290	70,410	70,530	20
21	73,690	73,810	73,920	74,040	74,160	74,280	74,390	74,510	74,620	74,740	74,850	74,960	75,060	75,170	75,280	75,380	75,490	75,590	75,690	75,790	75,900	21
22	79,310	79,420	79,530	79,640	79,750	79,860	79,960	80,070	80,170	80,270	80,370	80,470	80,560	80,650	80,740	80,830	80,920	81,010	81,090	81,180	81,260	22
23	80,530	80,740	80,950	81,150	81,350	81,560	81,760	81,970	82,170	82,370	82,570	82,770	82,960	83,160	83,350	83,550	83,740	83,930	84,130	84,320	84,510	23
24	81,760	82,060	82,360	82,660	82,960	83,260	83,560	83,860	84,170	84,470	84,770	85,070	85,370	85,670	85,960	86,260	86,560	86,860	87,160	87,460	87,760	24
25	82,980	83,370	83,770	84,170	84,570	84,970	85,360	85,760	86,160	86,570	86,970	87,370	87,770	88,170	88,580	88,980	89,380	89,790	90,190	90,600	91,000	25
26	82,980	83,370	83,770	84,170	84,570	84,970	85,360	85,760	86,160	86,570	86,970	87,370	87,770	88,170	88,580	88,980	89,380	89,790	90,190	90,600	91,000	26
27	82,980	83,370	83,770	84,170	84,570	84,970	85,360	85,760	86,160	86,570	86,970	87,370	87,770	88,170	88,580	88,980	89,380	89,790	90,190	90,600	91,000	27
28	82,980	83,370	83,770	84,170	84,570	84,970	85,360	85,760	86,160	86,570	86,970	87,370	87,770	88,170	88,580	88,980	89,380	89,790	90,190	90,600	91,000	28

MAY 2008

HEADWATER 804 to 808
TAILWATER 779.51 to 780.5

TELLICO DAM
SPILLWAY DISCHARGE
IN CUBIC FEET PER SECOND

GATE ARRANGEMENT	HEADWATER ELEVATION																					GATE ARRANGEMENT
	808.0	808.1	808.2	808.3	808.4	808.5	808.6	808.7	808.8	808.9	809.0	809.1	809.2	809.3	809.4	809.5	809.6	809.7	809.8	809.9	810.0	
1	2,760	2,760	2,770	2,770	2,780	2,780	2,790	2,790	2,800	2,800	2,810	2,810	2,820	2,820	2,830	2,830	2,840	2,840	2,850	2,850	2,860	1
2	5,990	6,000	6,010	6,020	6,040	6,050	6,060	6,070	6,080	6,090	6,100	6,110	6,120	6,130	6,140	6,150	6,160	6,170	6,180	6,190	6,200	2
3	9,320	9,330	9,350	9,370	9,380	9,400	9,410	9,430	9,450	9,460	9,480	9,500	9,510	9,530	9,550	9,560	9,580	9,590	9,610	9,630	9,640	3
4	12,740	12,770	12,790	12,820	12,840	12,860	12,890	12,910	12,940	12,960	12,990	13,010	13,040	13,060	13,080	13,110	13,130	13,160	13,180	13,210	13,230	4
5	16,550	16,580	16,610	16,640	16,670	16,700	16,730	16,760	16,790	16,820	16,850	16,880	16,910	16,940	16,970	16,990	17,020	17,050	17,080	17,110	17,140	5
6	20,030	20,060	20,100	20,130	20,160	20,200	20,230	20,260	20,290	20,330	20,360	20,390	20,420	20,460	20,490	20,520	20,550	20,590	20,620	20,650	20,680	6
7	23,480	23,520	23,560	23,600	23,640	23,670	23,710	23,750	23,790	23,830	23,870	23,900	23,940	23,980	24,020	24,050	24,090	24,130	24,170	24,200	24,240	7
8	26,750	26,800	26,840	26,880	26,930	26,970	27,020	27,060	27,100	27,150	27,190	27,230	27,280	27,320	27,360	27,410	27,450	27,490	27,530	27,580	27,620	8
9	30,000	30,050	30,100	30,150	30,200	30,250	30,300	30,350	30,400	30,450	30,500	30,550	30,590	30,640	30,690	30,740	30,790	30,840	30,880	30,930	30,980	9
10	33,090	33,140	33,200	33,250	33,310	33,360	33,420	33,470	33,530	33,580	33,640	33,690	33,740	33,800	33,850	33,910	33,960	34,010	34,070	34,120	34,180	10
11	36,040	36,100	36,160	36,220	36,280	36,340	36,400	36,460	36,520	36,580	36,640	36,700	36,760	36,820	36,880	36,940	37,000	37,060	37,120	37,180	37,240	11
12	39,290	39,360	39,430	39,490	39,560	39,630	39,690	39,760	39,820	39,890	39,960	40,020	40,090	40,150	40,220	40,280	40,350	40,410	40,480	40,540	40,610	12
13	42,470	42,550	42,620	42,690	42,770	42,840	42,910	42,990	43,060	43,130	43,200	43,280	43,350	43,420	43,490	43,570	43,640	43,710	43,780	43,850	43,920	13
14	45,600	45,680	45,760	45,840	45,920	46,000	46,080	46,160	46,240	46,320	46,400	46,480	46,550	46,630	46,710	46,790	46,870	46,950	47,030	47,100	47,180	14
15	48,640	48,720	48,810	48,900	48,990	49,070	49,160	49,250	49,330	49,420	49,510	49,590	49,680	49,760	49,850	49,940	50,020	50,110	50,190	50,280	50,360	15
16	51,620	51,710	51,810	51,900	52,000	52,090	52,180	52,280	52,370	52,460	52,560	52,650	52,740	52,840	52,930	53,020	53,110	53,210	53,300	53,390	53,480	16
17	56,130	56,240	56,350	56,450	56,560	56,670	56,770	56,880	56,990	57,090	57,200	57,310	57,410	57,520	57,620	57,730	57,830	57,940	58,040	58,150	58,250	17
18	60,640	60,770	60,890	61,010	61,130	61,250	61,370	61,490	61,600	61,720	61,840	61,960	62,080	62,200	62,310	62,430	62,550	62,670	62,780	62,900	63,020	18
19	65,160	65,290	65,430	65,560	65,690	65,830	65,960	66,090	66,220	66,350	66,480	66,620	66,750	66,880	67,010	67,140	67,270	67,400	67,530	67,650	67,780	19
20	70,530	70,650	70,760	70,880	71,000	71,110	71,230	71,350	71,460	71,570	71,690	71,800	71,910	72,020	72,130	72,240	72,340	72,450	72,560	72,670	72,770	20
21	75,900	76,000	76,100	76,200	76,300	76,400	76,500	76,600	76,700	76,800	76,890	76,980	77,070	77,160	77,250	77,340	77,420	77,510	77,590	77,680	77,760	21
22	81,260	81,350	81,440	81,520	81,610	81,690	81,780	81,860	81,940	82,020	82,100	82,170	82,230	82,300	82,370	82,430	82,500	82,560	82,630	82,690	82,750	22
23	84,510	84,700	84,900	85,090	85,280	85,480	85,670	85,860	86,050	86,240	86,430	86,610	86,790	86,980	87,160	87,340	87,520	87,700	87,880	88,060	88,240	23
24	87,760	88,060	88,360	88,660	88,960	89,260	89,560	89,860	90,160	90,460	90,760	91,060	91,350	91,650	91,950	92,250	92,540	92,840	93,140	93,440	93,730	24
25	91,000	91,410	91,820	92,230	92,630	93,040	93,450	93,860	94,270	94,680	95,090	95,500	95,910	96,330	96,740	97,150	97,570	97,980	98,400	98,810	99,230	25
26	91,000	91,410	91,820	92,230	92,630	93,040	93,450	93,860	94,270	94,680	95,090	95,500	95,910	96,330	96,740	97,150	97,570	97,980	98,400	98,810	99,230	26
27	91,000	91,410	91,820	92,230	92,630	93,040	93,450	93,860	94,270	94,680	95,090	95,500	95,910	96,330	96,740	97,150	97,570	97,980	98,400	98,810	99,230	27
28	91,000	91,410	91,820	92,230	92,630	93,040	93,450	93,860	94,270	94,680	95,090	95,500	95,910	96,330	96,740	97,150	97,570	97,980	98,400	98,810	99,230	28

GATE ARRANGEMENT	HEADWATER ELEVATION																					GATE ARRANGEMENT
	810.0	810.1	810.2	810.3	810.4	810.5	810.6	810.7	810.8	810.9	811.0	811.1	811.2	811.3	811.4	811.5	811.6	811.7	811.8	811.9	812.0	
1	2,860	2,860	2,870	2,870	2,880	2,880	2,880	2,890	2,890	2,900	2,900	2,910	2,910	2,920	2,920	2,930	2,930	2,940	2,940	2,950	2,950	1
2	6,200	6,210	6,220	6,230	6,240	6,250	6,260	6,270	6,280	6,300	6,310	6,320	6,330	6,340	6,350	6,360	6,370	6,380	6,390	6,400	6,410	2
3	9,640	9,660	9,670	9,690	9,710	9,720	9,740	9,750	9,770	9,790	9,800	9,820	9,830	9,850	9,860	9,880	9,900	9,910	9,930	9,940	9,960	3
4	13,230	13,250	13,280	13,300	13,330	13,350	13,370	13,400	13,420	13,440	13,470	13,490	13,520	13,540	13,560	13,590	13,610	13,630	13,660	13,680	13,700	4
5	17,140	17,170	17,200	17,230	17,260	17,290	17,320	17,340	17,370	17,400	17,430	17,460	17,490	17,520	17,550	17,570	17,600	17,630	17,660	17,690	17,720	5
6	20,680	20,710	20,740	20,780	20,810	20,840	20,870	20,900	20,930	20,960	21,000	21,030	21,060	21,090	21,120	21,150	21,180	21,210	21,240	21,270	21,300	6
7	24,240	24,280	24,320	24,350	24,390	24,430	24,460	24,500	24,540	24,570	24,610	24,650	24,680	24,720	24,760	24,790	24,830	24,870	24,900	24,940	24,980	7
8	27,620	27,660	27,700	27,750	27,790	27,830	27,870	27,910	27,960	28,000	28,040	28,080	28,120	28,160	28,210	28,250	28,290	28,330	28,370	28,410	28,450	8
9	30,980	31,030	31,080	31,120	31,170	31,220	31,270	31,320	31,360	31,410	31,460	31,510	31,550	31,600	31,650	31,690	31,740	31,790	31,840	31,880	31,930	9
10	34,180	34,230	34,280	34,340	34,390	34,440	34,500	34,550	34,600	34,660	34,710	34,760	34,810	34,870	34,920	34,970	35,020	35,080	35,130	35,180	35,230	10
11	37,240	37,300	37,360	37,420	37,480	37,540	37,600	37,660	37,720	37,780	37,840	37,900	37,960	38,020	38,080	38,140	38,200	38,260	38,310	38,370	38,430	11
12	40,610	40,680	40,740	40,810	40,880	40,940	41,010	41,080	41,140	41,210	41,270	41,340	41,410	41,470	41,540	41,600	41,670	41,740	41,800	41,870	41,930	12
13	43,920	44,000	44,070	44,140	44,210	44,280	44,360	44,430	44,500	44,570	44,640	44,710	44,790	44,860	44,930	45,000	45,070	45,140	45,210	45,280	45,350	13
14	47,180	47,260	47,340	47,420	47,490	47,570	47,650	47,720	47,800	47,880	47,960	48,030	48,110	48,180	48,260	48,340	48,410	48,490	48,560	48,640	48,720	14
15	50,360	50,450	50,530	50,610	50,700	50,780	50,870	50,950	51,030	51,120	51,200	51,280	51,370	51,450	51,530	51,620	51,700	51,780	51,860	51,940	52,030	15
16	53,480	53,570	53,670	53,760	53,850	53,940	54,030	54,120	54,210	54,300	54,390	54,480	54,570	54,660	54,750	54,840	54,930	55,020	55,110	55,200	55,280	16
17	58,250	58,350	58,460	58,560	58,660	58,770	58,870	58,970	59,080	59,180	59,280	59,380	59,480	59,590	59,690	59,790	59,890	59,990	60,090	60,190	60,290	17
18	63,020	63,130	63,250	63,360	63,480	63,600	63,710	63,830	63,940	64,050	64,170	64,280	64,400	64,510	64,620	64,740	64,850	64,960	65,070	65,190	65,300	18
19	67,780	67,910	68,040	68,170	68,300	68,420	68,550	68,680	68,800	68,930	69,060	69,180	69,310	69,430	69,560	69,680	69,810	69,930	70,060	70,180	70,310	19
20	72,770	72,880	72,990	73,100	73,220	73,320	73,430	73,540	73,650	73,760	73,870	73,990	74,120	74,250	74,370	74,500	74,630	74,750	74,880	75,000	75,130	20
21	77,760	77,850	77,950	78,040	78,130	78,230	78,320	78,410	78,500	78,590	78,680	78,810	78,930	79,060	79,190	79,320	79,440	79,570	79,700	79,820	79,950	21
22	82,750	82,830	82,900	82,980	83,050	83,130	83,200	83,270	83,350	83,420	83,490	83,620	83,750	83,880	84,000	84,130	84,260	84,390	84,510	84,640	84,770	22
23	88,240	88,430	88,620	88,810	89,000	89,190	89,380	89,570	89,750	89,940	90,070	90,240	90,410	90,570	90,740	90,910	91,070	91,240	91,400	91,560	91,730	23
24	93,730	94,040	94,340	94,640	94,950	95,250	95,550	95,860	96,160	96,460	96,660	96,860	97,070	97,270	97,480	97,680	97,880	98,080	98,290	98,490	98,690	24
25	99,230	99,640	100,100	100,500	100,900	101,300	101,700	102,100	102,600	103,000	103,200	103,500	103,700	104,000	104,200	104,500	104,700	104,900	105,200	105,400	105,600	25
26	99,230	99,640	100,100	100,500	100,900	101,300	101,700	102,100	102,600	103,000	103,300	103,600	103,900	104,200	104,500	104,800	105,100	105,400	105,700	106,000	106,300	26
27	99,230	99,640	100,100	100,500	100,900	101,300	101,700	102,100	102,600	103,000	103,400	103,700	104,100	104,400	104,800	105,200	105,500	105,900	106,200	106,600	107,000	27
28	99,230	99,640	100,100	100,500	100,900	101,300	101,700	102,100	102,600	103,000	103,400	103,800	104,200	104,700	105,100	105,500	105,900	106,400	106,800	107,200	107,600	28

HEADWATER 808 to 812
TAILWATER 779.51 to 780.5

MAY 2008

TELLICO DAM
SPILLWAY DISCHARGE
IN CUBIC FEET PER SECOND

HEADWATER ELEVATION

GATE ARRANGEMENT	812.0	812.1	812.2	812.3	812.4	812.5	812.6	812.7	812.8	812.9	813.0	813.1	813.2	813.3	813.4	813.5	813.6	813.7	813.8	813.9	814.0	GATE ARRANGEMENT
1	2,950	2,950	2,960	2,960	2,970	2,970	2,980	2,980	2,990	2,990	3,000	3,000	3,000	3,010	3,010	3,020	3,020	3,030	3,030	3,040	3,040	1
2	6,410	6,420	6,430	6,440	6,450	6,460	6,470	6,480	6,490	6,500	6,510	6,520	6,530	6,540	6,540	6,550	6,560	6,570	6,580	6,590	6,600	2
3	9,960	9,970	9,990	10,010	10,020	10,040	10,050	10,070	10,080	10,100	10,110	10,130	10,140	10,160	10,170	10,190	10,200	10,220	10,230	10,250	10,270	3
4	13,700	13,730	13,750	13,770	13,800	13,820	13,840	13,870	13,890	13,910	13,930	13,960	13,980	14,000	14,030	14,050	14,070	14,090	14,120	14,140	14,160	4
5	17,720	17,750	17,770	17,800	17,830	17,860	17,890	17,910	17,940	17,970	18,000	18,030	18,050	18,080	18,110	18,140	18,170	18,190	18,220	18,250	18,280	5
6	21,300	21,340	21,370	21,400	21,430	21,460	21,490	21,520	21,550	21,580	21,610	21,640	21,670	21,700	21,730	21,760	21,790	21,820	21,850	21,880	21,910	6
7	24,980	25,010	25,050	25,090	25,120	25,160	25,190	25,230	25,270	25,300	25,340	25,370	25,410	25,450	25,480	25,520	25,550	25,590	25,620	25,660	25,700	7
8	28,450	28,490	28,530	28,570	28,620	28,660	28,700	28,740	28,780	28,820	28,860	28,900	28,940	28,980	29,020	29,060	29,100	29,140	29,170	29,210	29,250	8
9	31,930	31,980	32,020	32,070	32,120	32,160	32,210	32,250	32,300	32,350	32,390	32,440	32,480	32,530	32,580	32,620	32,670	32,710	32,760	32,800	32,850	9
10	35,230	35,290	35,340	35,390	35,440	35,490	35,540	35,590	35,640	35,690	35,740	35,790	35,840	35,900	35,950	36,000	36,050	36,100	36,150	36,200	36,250	10
11	38,430	38,490	38,550	38,610	38,670	38,720	38,780	38,840	38,900	38,950	39,010	39,070	39,130	39,180	39,240	39,300	39,360	39,410	39,470	39,530	39,580	11
12	41,930	41,990	42,060	42,120	42,180	42,240	42,310	42,370	42,430	42,490	42,550	42,620	42,680	42,750	42,810	42,880	42,940	43,000	43,070	43,130	43,190	12
13	45,350	45,420	45,490	45,560	45,630	45,700	45,760	45,830	45,900	45,970	46,040	46,100	46,170	46,230	46,300	46,360	46,430	46,490	46,560	46,620	46,690	13
14	48,720	48,790	48,870	48,940	49,020	49,090	49,170	49,240	49,320	49,390	49,460	49,540	49,610	49,690	49,760	49,830	49,910	49,980	50,060	50,130	50,200	14
15	52,030	52,110	52,190	52,270	52,350	52,430	52,520	52,600	52,680	52,760	52,840	52,920	53,000	53,080	53,160	53,240	53,320	53,400	53,480	53,560	53,640	15
16	55,280	55,370	55,460	55,550	55,640	55,730	55,810	55,900	55,990	56,080	56,160	56,250	56,340	56,420	56,510	56,600	56,680	56,770	56,860	56,940	57,030	16
17	60,290	60,390	60,490	60,590	60,690	60,790	60,890	60,990	61,090	61,190	61,290	61,390	61,480	61,580	61,680	61,780	61,880	61,970	62,070	62,170	62,260	17
18	65,300	65,410	65,520	65,630	65,750	65,860	65,970	66,080	66,190	66,300	66,410	66,520	66,630	66,740	66,850	66,960	67,070	67,180	67,280	67,390	67,500	18
19	70,310	70,430	70,550	70,680	70,800	70,920	71,040	71,170	71,290	71,410	71,530	71,650	71,770	71,900	72,020	72,140	72,260	72,380	72,500	72,620	72,740	19
20	75,130	75,260	75,390	75,520	75,650	75,780	75,910	76,040	76,170	76,290	76,420	76,560	76,690	76,820	76,960	77,090	77,220	77,360	77,490	77,620	77,750	20
21	79,950	80,080	80,220	80,360	80,500	80,630	80,770	80,910	81,040	81,180	81,310	81,460	81,610	81,750	81,900	82,050	82,190	82,340	82,480	82,630	82,770	21
22	84,770	84,910	85,060	85,200	85,350	85,490	85,630	85,780	85,920	86,060	86,200	86,360	86,520	86,680	86,840	87,000	87,160	87,320	87,470	87,630	87,790	22
23	91,730	91,840	91,950	92,060	92,170	92,270	92,380	92,490	92,590	92,700	92,800	92,920	93,030	93,140	93,260	93,370	93,480	93,590	93,710	93,820	93,920	23
24	98,690	98,760	98,840	98,910	98,980	99,060	99,130	99,200	99,260	99,330	99,400	99,470	99,540	99,610	99,670	99,740	99,810	99,870	99,940	100,000	100,100	24
25	105,600	105,700	105,700	105,800	105,800	105,800	105,900	105,900	105,900	106,000	106,000	106,000	106,000	106,100	106,100	106,100	106,100	106,100	106,200	106,200	106,200	25
26	106,300	106,500	106,600	106,800	107,000	107,100	107,300	107,500	107,600	107,800	108,000	108,100	108,300	108,400	108,600	108,800	108,900	109,100	109,200	109,400	109,500	26
27	107,000	107,300	107,600	107,900	108,200	108,500	108,800	109,000	109,300	109,600	109,900	110,200	110,500	110,800	111,100	111,400	111,700	112,000	112,300	112,600	112,900	27
28	107,600	108,100	108,500	108,900	109,300	109,800	110,200	110,600	111,000	111,500	111,900	112,300	112,800	113,200	113,600	114,100	114,500	114,900	115,400	115,800	116,200	28

HEADWATER ELEVATION

GATE ARRANGEMENT	814.0	814.1	814.2	814.3	814.4	814.5	814.6	814.7	814.8	814.9	815.0	815.1	815.2	815.3	815.4	815.5	815.6	815.7	815.8	815.9	816.0	GATE ARRANGEMENT
1	3,040	3,050	3,050	3,050	3,060	3,060	3,070	3,070	3,080	3,080	3,090	3,090	3,090	3,100	3,100	3,110						1
2	6,600	6,610	6,620	6,630	6,640	6,650	6,660	6,670	6,680	6,690	6,700	6,710	6,720	6,730	6,740	6,750	6,760	6,770	6,780	6,790	6,790	2
3	10,270	10,280	10,300	10,310	10,330	10,340	10,360	10,370	10,390	10,400	10,420	10,430	10,440	10,460	10,470	10,490	10,500	10,520	10,530	10,550	10,560	3
4	14,160	14,180	14,210	14,230	14,250	14,270	14,300	14,320	14,340	14,360	14,390	14,410	14,430	14,450	14,480	14,500	14,520	14,540	14,560	14,580	14,610	4
5	18,280	18,300	18,330	18,360	18,390	18,410	18,440	18,470	18,500	18,520	18,550	18,580	18,610	18,630	18,660	18,690	18,720	18,740	18,770	18,800	18,820	5
6	21,910	21,940	21,970	22,000	22,030	22,060	22,090	22,120	22,150	22,180	22,210	22,240	22,270	22,300	22,330	22,360	22,390	22,420	22,450	22,480	22,510	6
7	25,700	25,730	25,770	25,800	25,840	25,870	25,910	25,940	25,980	26,010	26,050	26,080	26,120	26,150	26,190	26,220	26,260	26,290	26,330	26,360	26,390	7
8	29,250	29,290	29,330	29,370	29,410	29,450	29,490	29,530	29,570	29,600	29,640	29,680	29,720	29,760	29,800	29,840	29,870	29,910	29,950	29,990	30,030	8
9	32,850	32,890	32,940	32,980	33,030	33,070	33,120	33,160	33,210	33,250	33,300	33,340	33,390	33,430	33,480	33,520	33,570	33,610	33,660	33,700	33,740	9
10	36,250	36,300	36,350	36,400	36,450	36,490	36,540	36,590	36,640	36,690	36,740	36,790	36,840	36,890	36,940	36,990	37,040	37,080	37,130	37,180	37,230	10
11	39,580	39,640	39,700	39,750	39,810	39,870	39,930	39,980	40,040	40,100	40,150	40,210	40,270	40,330	40,390	40,450	40,500	40,560	40,620	40,680	40,740	11
12	43,190	43,260	43,320	43,380	43,440	43,500	43,570	43,630	43,690	43,750	43,810	43,880	43,940	44,000	44,070	44,130	44,190	44,260	44,320	44,380	44,450	12
13	46,690	46,750	46,820	46,890	46,950	47,020	47,090	47,150	47,220	47,290	47,350	47,430	47,500	47,570	47,650	47,720	47,790	47,870	47,940	48,010	48,090	13
14	50,200	50,280	50,350	50,430	50,510	50,580	50,660	50,730	50,810	50,880	50,960	51,030	51,100	51,170	51,240	51,320	51,390	51,460	51,530	51,600	51,670	14
15	53,640	53,720	53,800	53,880	53,960	54,040	54,110	54,190	54,270	54,350	54,430	54,510	54,590	54,660	54,740	54,820	54,900	54,970	55,050	55,130	55,210	15
16	57,030	57,110	57,200	57,290	57,370	57,460	57,540	57,630	57,710	57,800	57,880	57,970	58,050	58,130	58,220	58,300	58,390	58,470	58,550	58,640	58,720	16
17	62,260	62,360	62,460	62,560	62,650	62,750	62,840	62,940	63,040	63,130	63,230	63,320	63,420	63,510	63,610	63,700	63,800	63,890	63,990	64,080	64,180	17
18	67,500	67,610	67,720	67,820	67,930	68,040	68,150	68,250	68,360	68,470	68,570	68,680	68,790	68,890	69,000	69,100	69,210	69,320	69,420	69,530	69,630	18
19	72,740	72,860	72,980	73,090	73,210	73,330	73,450	73,570	73,690	73,800	73,920	74,040	74,160	74,270	74,390	74,510	74,620	74,740	74,860	74,970	75,090	19
20	77,750	77,890	78,020	78,150	78,280	78,420	78,550	78,680	78,810	78,940	79,070	79,200	79,330	79,460	79,590	79,720	79,850	79,980	80,110	80,240	80,360	20
21	82,770	82,920	83,060	83,210	83,350	83,500	83,640	83,790	83,930	84,080	84,220	84,360	84,510	84,650	84,790	84,930	85,070	85,220	85,360	85,500	85,640	21
22	87,790	87,950	88,110	88,270	88,420	88,580	88,740	88,900	89,050	89,210	89,370	89,520	89,680	89,840	89,990	90,150	90,300	90,460	90,610	90,760	90,920	22
23	93,920	94,060	94,190	94,320	94,460	94,590	94,720	94,850	94,980	95,110	95,240	95,370	95,500	95,620	95,750	95,880	96,000	96,130	96,250	96,380	96,500	23
24	100,100	100,200	100,300	100,400	100,500	100,600	100,700	100,800	100,900	101,000	101,100	101,200	101,300	101,400	101,500	101,600	101,700	101,800	101,900	102,000	102,100	24
25	106,200	106,300	106,400	106,400	106,500	106,600	106,700	106,800	106,800	106,900	107,000	107,100	107,100	107,200	107,300	107,300	107,400	107,500	107,500	107,600	107,700	25
26	109,500	109,700	109,900	110,100	110,300	110,500	110,700	110,900	111,100	111,300	111,600	111,600	111,700	111,700	111,800	111,800	111,900	111,900	112,000	112,000	112,100	26
27	112,900	113,200	113,500	113,800	114,200	114,500	114,800	115,100	115,400	115,700	116,200	116,200	116,200	116,300	116,300	116,300	116,300	116,400	116,400	116,400	116,400	27
28	116,200	116,700	117,100	117,500	118,000	118,400	118,800	119,300	119,700	120,200	120,800	120,800	120,800	120,800	120,800	120,800	120,800	120,800	120,800	120,800	120,800	28

MAY 2008

See special instruction for preventing gate overflow on page 2.

HEADWATER 812 to 816
TAILWATER 779.51 to 780.5

TELLICO DAM
SPILLWAY DISCHARGE
IN CUBIC FEET PER SECOND

GATE ARRANGEMENT	HEADWATER ELEVATION																				GATE ARRANGEMENT
	816.0	816.1	816.2	816.3	816.4	816.5	816.6	816.7	816.8	816.9	817.0	817.1	817.2	817.3	817.4	817.5	817.6	817.7	817.8	817.9	818.0	
1																						1
2	6,790	6,800	6,810																			2
3	10,560	10,580	10,590	10,610	10,620	10,640	10,650	10,660	10,680	10,690	10,710											3
4	14,610	14,630	14,650	14,670	14,690	14,720	14,740	14,760	14,780	14,800	14,820	15,030	15,390	15,850	16,400	17,030	17,720	18,470				4
5	18,820	18,850	18,870	18,900	18,920	18,950	18,970	19,000	19,020	19,050	19,070	19,280	19,650	20,110	20,670	21,290	21,990	22,750	23,560	24,440	25,360	5
6	22,510	22,540	22,580	22,610	22,640	22,670	22,700	22,730	22,760	22,790	22,820	23,030	23,400	23,880	24,440	25,070	25,770	26,530	27,360	28,240	29,170	6
7	26,390	26,430	26,460	26,500	26,530	26,560	26,600	26,630	26,670	26,700	26,730	26,950	27,320	27,800	28,360	29,000	29,700	30,470	31,290	32,170	33,110	7
8	30,030	30,060	30,100	30,140	30,180	30,220	30,250	30,290	30,330	30,370	30,410	30,630	31,000	31,480	32,050	32,690	33,400	34,170	35,000	35,880	36,820	8
9	33,740	33,790	33,830	33,870	33,920	33,960	34,000	34,050	34,090	34,130	34,170	34,400	34,780	35,270	35,840	36,480	37,200	37,970	38,810	39,700	40,640	9
10	37,230	37,280	37,330	37,380	37,420	37,470	37,520	37,570	37,620	37,660	37,710	37,940	38,330	38,820	39,400	40,050	40,760	41,540	42,390	43,280	44,230	10
11	40,740	40,800	40,860	40,910	40,970	41,030	41,090	41,150	41,210	41,270	41,330	41,570	41,970	42,470	43,060	43,720	44,450	45,240	46,100	47,000	47,970	11
12	44,450	44,510	44,580	44,640	44,700	44,770	44,830	44,900	44,960	45,020	45,090	45,330	45,730	46,240	46,830	47,490	48,230	49,020	49,880	50,790	51,750	12
13	48,090	48,160	48,220	48,290	48,360	48,430	48,490	48,560	48,630	48,700	48,760	49,010	49,420	49,930	50,520	51,190	51,920	52,720	53,580	54,490	55,460	13
14	51,670	51,740	51,820	51,890	51,960	52,030	52,100	52,170	52,240	52,310	52,380	52,630	53,040	53,550	54,140	54,810	55,550	56,350	57,210	58,120	59,090	14
15	55,210	55,280	55,360	55,440	55,510	55,590	55,670	55,740	55,820	55,900	55,970	56,230	56,650	57,170	57,770	58,450	59,190	60,000	60,870	61,790	62,770	15
16	58,720	58,800	58,890	58,970	59,050	59,140	59,220	59,300	59,380	59,470	59,550	59,810	60,240	60,760	61,370	62,050	62,800	63,620	64,490	65,420	66,410	16
17	64,180	64,270	64,360	64,460	64,550	64,640	64,740	64,830	64,920	65,020	65,110	65,390	65,820	66,350	66,970	67,670	68,430	69,250	70,140	71,080	72,070	17
18	69,630	69,740	69,840	69,940	70,050	70,150	70,260	70,360	70,460	70,570	70,670	70,960	71,400	71,950	72,580	73,280	74,050	74,890	75,780	76,740	77,740	18
19	75,090	75,200	75,320	75,430	75,550	75,660	75,780	75,890	76,010	76,120	76,230	76,530	76,980	77,540	78,180	78,900	79,680	80,520	81,430	82,390	83,410	19
20	80,360	80,490	80,620	80,750	80,870	81,000	81,130	81,260	81,380	81,510	81,640	81,950	82,410	82,980	83,630	84,360	85,150	86,010	86,930	87,900	88,930	20
21	85,640	85,780	85,920	86,060	86,200	86,340	86,480	86,620	86,760	86,900	87,040	87,360	87,840	88,420	89,080	89,820	90,630	91,500	92,430	93,420	94,460	21
22	90,920	91,070	91,220	91,380	91,530	91,680	91,830	91,990	92,140	92,290	92,440	92,770	93,260	93,860	94,530	95,290	96,110	96,990	97,930	98,930	99,980	22
23	96,500	96,650	96,790	96,930	97,080	97,220	97,360	97,500	97,650	97,790	97,930	98,250	98,730	99,320	99,980	100,700	101,500	102,400	103,300	104,300	105,400	23
24	102,100	102,200	102,400	102,500	102,600	102,800	102,900	103,000	103,200	103,300	103,400	103,700	104,200	104,800	105,400	106,200	107,000	107,800	108,700	109,700	110,700	24
25	107,700	107,800	107,900	108,000	108,200	108,300	108,400	108,500	108,700	108,800	108,900	109,200	109,700	110,200	110,900	111,600	112,400	113,200	114,100	115,100	116,100	25
26	112,100	112,100	112,200	112,300	112,400	112,500	112,600	112,700	112,700	112,800	112,900	113,200	113,600	114,100	114,700	115,400	116,200	117,000	117,900	118,800	119,800	26
27	116,400	116,500	116,500	116,600	116,600	116,700	116,700	116,800	116,800	116,900	116,900	117,200	117,500	118,000	118,600	119,300	120,000	120,800	121,600	122,500	123,500	27
28	120,800	120,800	120,900	120,900	120,900	120,900	120,900	120,900	120,900	120,900	120,900	121,100	121,500	121,900	122,500	123,100	123,800	124,500	125,300	126,200	127,100	28

GATE ARRANGEMENT	HEADWATER ELEVATION																				GATE ARRANGEMENT
	818.0	818.1	818.2	818.3	818.4	818.5	818.6	818.7	818.8	818.9	819.0	819.1	819.2	819.3	819.4	819.5	819.6	819.7	819.8	819.9	820.0	
1																						1
2																						2
3																						3
4																						4
5	25,360	26,340	27,370	28,450	29,580																	5
6	29,170	30,160	31,190	32,280	33,410	34,590	35,810	37,080	38,390	39,740	41,140	42,580										6
7	33,110	34,100	35,140	36,220	37,360	38,540	39,760	41,030	42,350	43,700	45,100	46,540	48,020	49,540	51,100	52,700	54,330	56,010	57,720			7
8	36,820	37,820	38,860	39,950	41,090	42,270	43,500	44,780	46,090	47,450	48,850	50,300	51,780	53,300	54,870	56,470	58,110	59,790	61,500	63,260	65,040	8
9	40,640	41,640	42,690	43,790	44,930	46,120	47,350	48,630	49,950	51,320	52,730	54,170	55,660	57,190	58,760	60,370	62,010	63,690	65,420	67,170	68,970	9
10	44,230	45,230	46,290	47,390	48,540	49,730	50,970	52,250	53,580	54,950	56,360	57,820	59,310	60,840	62,420	64,030	65,680	67,370	69,090	70,850	72,650	10
11	47,970	48,990	50,060	51,180	52,350	53,560	54,820	56,120	57,470	58,860	60,290	61,760	63,270	64,810	66,400	68,030	69,690	71,400	73,140	74,910	76,730	11
12	51,750	52,780	53,850	54,970	56,140	57,360	58,620	59,930	61,280	62,670	64,100	65,580	67,100	68,650	70,250	71,880	73,560	75,270	77,020	78,810	80,630	12
13	55,460	56,490	57,560	58,690	59,860	61,080	62,350	63,650	65,010	66,400	67,840	69,310	70,830	72,390	73,990	75,630	77,300	79,020	80,770	82,560	84,380	13
14	59,090	60,120	61,200	62,320	63,500	64,720	65,980	67,290	68,640	70,040	71,470	72,950	74,460	76,020	77,610	79,240	80,920	82,620	84,370	86,160	87,980	14
15	62,770	63,800	64,880	66,010	67,190	68,410	69,680	70,990	72,340	73,740	75,180	76,660	78,180	79,740	81,340	82,980	84,660	86,370	88,130	89,920	91,740	15
16	66,410	67,440	68,530	69,660	70,850	72,070	73,350	74,670	76,030	77,430	78,870	80,360	81,890	83,450	85,060	86,700	88,390	90,110	91,870	93,660	95,500	16
17	72,070	73,120	74,220	75,360	76,550	77,790	79,080	80,400	81,780	83,190	84,640	86,140	87,680	89,250	90,870	92,520	94,220	95,950	97,720	99,520	101,400	17
18	77,740	78,800	79,900	81,060	82,260	83,510	84,810	86,140	87,520	88,950	90,410	91,920	93,470	95,050	96,680	98,340	100,000	101,800	103,600	105,400	107,200	18
19	83,410	84,470	85,590	86,760	87,970	89,230	90,530	91,880	93,270	94,710	96,180	97,700	99,260	100,900	102,500	104,200	105,900	107,600	109,400	111,200	113,100	19
20	88,930	90,010	91,140	92,320	93,540	94,810	96,130	97,490	98,890	100,300	101,800	103,400	104,900	106,500	108,200	109,900	111,600	113,400	115,200	117,000	118,900	20
21	94,460	95,550	96,690	97,880	99,110	100,400	101,700	103,100	104,500	106,000	107,500	109,000	110,600	112,200	113,900	115,600	117,300	119,100	120,900	122,700	124,600	21
22	99,980	101,100	102,200	103,400	104,700	106,000	107,300	108,700	110,100	111,600	113,100	114,700	116,300	117,900	119,600	121,300	123,000	124,800	126,600	128,500	130,400	22
23	105,400	106,500	107,600	108,800	110,100	111,400	112,700	114,100	115,500	117,000	118,500	120,100	121,700	123,300	125,000	126,700	128,400	130,200	132,000	133,900	135,800	23
24	110,700	111,900	113,000	114,200	115,500	116,800	118,100	119,500	120,900	122,400	123,900	125,500	127,100	128,700	130,400	132,100	133,900	135,600	137,500	139,300	141,200	24
25	116,100	117,200	118,400	119,600	120,900	122,200	123,500	124,900	126,300	127,800	129,300	130,900	132,500	134,100	135,800	137,500	139,300	141,100	142,900	144,800	146,700	25
26	119,800	120,900	122,100	123,300	124,600	125,900	127,300	128,700	130,100	131,600	133,200	134,700	136,400	138,000	139,700	141,400	143,200	145,000	146,900	148,800	150,700	26
27	123,500	124,600	125,800	127,000	128,300	129,700	131,100	132,500	133,900	135,500	137,000	138,600	140,200	141,900	143,600	145,400	147,200	149,000	150,900	152,800	154,700	27
28	127,100	128,300	129,500	130,800	132,100	133,400	134,800	136,300	137,800	139,300	140,900	142,500	144,100	145,800	147,500	149,300	151,100	153,000	154,800	156,800	158,700	28

HEADWATER 816 to 820
TAILWATER 779.51 to 780.5

See special instruction for preventing gate overflow on page 2.

MAY 2008

TELLICO DAM
SPILLWAY DISCHARGE
IN CUBIC FEET PER SECOND

HEADWATER ELEVATION

GATE ARRANGEMENT	800.0	800.1	800.2	800.3	800.4	800.5	800.6	800.7	800.8	800.9	801.0	801.1	801.2	801.3	801.4	801.5	801.6	801.7	801.8	801.9	802.0	GATE ARRANGEMENT
1	2,270	2,280	2,290	2,290	2,300	2,300	2,310	2,310	2,320	2,330	2,330	2,340	2,340	2,350	2,360	2,360	2,370	2,370	2,380	2,380	2,390	1
2	4,920	4,930	4,950	4,960	4,970	4,980	5,000	5,010	5,020	5,040	5,050	5,060	5,070	5,090	5,100	5,110	5,120	5,140	5,150	5,160	5,170	2
3	7,660	7,680	7,700	7,720	7,740	7,760	7,780	7,800	7,820	7,840	7,860	7,880	7,900	7,920	7,930	7,950	7,970	7,990	8,010	8,030	8,050	3
4	10,320	10,350	10,370	10,400	10,430	10,460	10,480	10,510	10,540	10,570	10,590	10,620	10,650	10,680	10,700	10,730	10,760	10,780	10,810	10,840	10,870	4
5	13,520	13,550	13,590	13,620	13,660	13,700	13,730	13,770	13,800	13,840	13,870	13,910	13,940	13,980	14,010	14,050	14,080	14,120	14,150	14,190	14,220	5
6	16,610	16,650	16,690	16,740	16,780	16,820	16,860	16,900	16,950	16,990	17,030	17,070	17,110	17,150	17,200	17,240	17,280	17,320	17,360	17,400	17,440	6
7	19,740	19,790	19,830	19,880	19,930	19,970	20,020	20,070	20,120	20,160	20,210	20,260	20,300	20,350	20,400	20,440	20,490	20,540	20,580	20,630	20,670	7
8	22,800	22,850	22,900	22,950	23,000	23,060	23,110	23,160	23,210	23,260	23,310	23,360	23,410	23,460	23,510	23,560	23,610	23,660	23,710	23,760	23,810	8
9	25,570	25,630	25,680	25,740	25,800	25,860	25,920	25,970	26,030	26,090	26,150	26,200	26,260	26,320	26,380	26,430	26,490	26,550	26,600	26,660	26,720	9
10	28,210	28,270	28,340	28,400	28,470	28,530	28,600	28,660	28,730	28,790	28,850	28,920	28,980	29,040	29,110	29,170	29,230	29,300	29,360	29,420	29,490	10
11	30,730	30,800	30,880	30,950	31,020	31,090	31,160	31,230	31,300	31,370	31,440	31,510	31,580	31,650	31,720	31,790	31,860	31,930	32,000	32,070	32,140	11
12	33,420	33,500	33,580	33,660	33,730	33,810	33,890	33,970	34,050	34,130	34,200	34,280	34,360	34,440	34,510	34,590	34,670	34,740	34,820	34,900	34,970	12
13	36,030	36,120	36,210	36,290	36,380	36,460	36,550	36,630	36,720	36,800	36,890	36,970	37,050	37,140	37,220	37,300	37,390	37,470	37,550	37,630	37,720	13
14	38,570	38,660	38,760	38,850	38,940	39,030	39,120	39,220	39,310	39,400	39,490	39,580	39,670	39,760	39,850	39,940	40,030	40,120	40,210	40,300	40,390	14
15	41,020	41,120	41,220	41,320	41,420	41,520	41,620	41,720	41,820	41,920	42,020	42,120	42,210	42,310	42,410	42,510	42,600	42,700	42,790	42,890	42,990	15
16	43,400	43,500	43,610	43,720	43,820	43,930	44,040	44,140	44,250	44,350	44,460	44,560	44,660	44,770	44,870	44,970	45,080	45,180	45,280	45,380	45,480	16
17	47,330	47,450	47,560	47,680	47,790	47,900	48,020	48,130	48,240	48,350	48,460	48,570	48,680	48,790	48,900	49,010	49,120	49,230	49,340	49,450	49,550	17
18	51,270	51,390	51,520	51,640	51,760	51,880	52,000	52,120	52,240	52,350	52,470	52,590	52,710	52,820	52,940	53,050	53,170	53,280	53,400	53,510	53,620	18
19	55,210	55,340	55,470	55,600	55,730	55,850	55,980	56,110	56,230	56,360	56,480	56,600	56,730	56,850	56,970	57,090	57,210	57,330	57,450	57,580	57,700	19
20	56,840	57,050	57,260	57,470	57,670	57,880	58,090	58,290	58,500	58,700	58,910	59,110	59,320	59,520	59,730	59,930	60,140	60,340	60,550	60,750	60,960	20
21	58,480	58,760	59,050	59,340	59,620	59,910	60,190	60,480	60,770	61,050	61,340	61,630	61,910	62,200	62,490	62,780	63,070	63,350	63,640	63,930	64,220	21
22	60,120	60,480	60,840	61,200	61,570	61,930	62,300	62,670	63,030	63,400	63,770	64,140	64,510	64,880	65,250	65,620	65,990	66,360	66,740	67,110	67,480	22
23	60,120	60,480	60,840	61,200	61,570	61,930	62,300	62,670	63,030	63,400	63,770	64,140	64,510	64,880	65,250	65,620	65,990	66,360	66,740	67,110	67,480	23
24	60,120	60,480	60,840	61,200	61,570	61,930	62,300	62,670	63,030	63,400	63,770	64,140	64,510	64,880	65,250	65,620	65,990	66,360	66,740	67,110	67,480	24
25	60,120	60,480	60,840	61,200	61,570	61,930	62,300	62,670	63,030	63,400	63,770	64,140	64,510	64,880	65,250	65,620	65,990	66,360	66,740	67,110	67,480	25
26	60,120	60,480	60,840	61,200	61,570	61,930	62,300	62,670	63,030	63,400	63,770	64,140	64,510	64,880	65,250	65,620	65,990	66,360	66,740	67,110	67,480	26
27	60,120	60,480	60,840	61,200	61,570	61,930	62,300	62,670	63,030	63,400	63,770	64,140	64,510	64,880	65,250	65,620	65,990	66,360	66,740	67,110	67,480	27
28	60,120	60,480	60,840	61,200	61,570	61,930	62,300	62,670	63,030	63,400	63,770	64,140	64,510	64,880	65,250	65,620	65,990	66,360	66,740	67,110	67,480	28

HEADWATER ELEVATION

GATE ARRANGEMENT	802.0	802.1	802.2	802.3	802.4	802.5	802.6	802.7	802.8	802.9	803.0	803.1	803.2	803.3	803.4	803.5	803.6	803.7	803.8	803.9	804.0	GATE ARRANGEMENT
1	2,390	2,400	2,400	2,410	2,410	2,420	2,420	2,430	2,430	2,440	2,450	2,450	2,460	2,460	2,470	2,470	2,480	2,480	2,490	2,500	2,500	1
2	5,170	5,180	5,200	5,210	5,220	5,230	5,250	5,260	5,270	5,280	5,290	5,310	5,320	5,330	5,340	5,350	5,370	5,380	5,390	5,400	5,410	2
3	8,050	8,070	8,090	8,110	8,130	8,150	8,160	8,180	8,200	8,220	8,240	8,260	8,280	8,300	8,310	8,330	8,350	8,370	8,390	8,410	8,430	3
4	10,870	10,890	10,920	10,950	10,970	11,000	11,030	11,050	11,080	11,110	11,130	11,160	11,190	11,210	11,240	11,270	11,290	11,320	11,350	11,370	11,400	4
5	14,220	14,260	14,290	14,330	14,360	14,400	14,430	14,460	14,500	14,530	14,570	14,600	14,640	14,670	14,700	14,740	14,770	14,800	14,840	14,870	14,910	5
6	17,440	17,480	17,530	17,570	17,610	17,650	17,690	17,730	17,770	17,810	17,850	17,890	17,930	17,970	18,010	18,050	18,090	18,130	18,170	18,210	18,250	6
7	20,670	20,720	20,770	20,810	20,860	20,900	20,950	21,000	21,040	21,090	21,130	21,180	21,220	21,270	21,310	21,360	21,400	21,450	21,490	21,540	21,580	7
8	23,810	23,860	23,910	23,960	24,010	24,060	24,110	24,160	24,210	24,260	24,310	24,360	24,400	24,450	24,500	24,550	24,600	24,650	24,700	24,750	24,790	8
9	26,720	26,770	26,830	26,880	26,940	27,000	27,050	27,110	27,160	27,220	27,270	27,330	27,390	27,440	27,500	27,550	27,610	27,660	27,710	27,770	27,820	9
10	29,490	29,550	29,610	29,670	29,740	29,800	29,860	29,920	29,980	30,050	30,110	30,170	30,230	30,290	30,350	30,410	30,480	30,540	30,600	30,660	30,720	10
11	32,140	32,210	32,280	32,350	32,420	32,480	32,550	32,620	32,690	32,760	32,820	32,890	32,960	33,030	33,090	33,160	33,230	33,290	33,360	33,430	33,490	11
12	34,970	35,050	35,120	35,200	35,280	35,350	35,430	35,500	35,580	35,650	35,730	35,800	35,870	35,950	36,020	36,100	36,170	36,240	36,320	36,390	36,460	12
13	37,720	37,800	37,880	37,960	38,040	38,130	38,210	38,290	38,370	38,450	38,530	38,610	38,690	38,770	38,850	38,930	39,010	39,090	39,170	39,250	39,320	13
14	40,390	40,480	40,560	40,650	40,740	40,830	40,910	41,000	41,090	41,180	41,260	41,350	41,430	41,520	41,610	41,690	41,780	41,860	41,950	42,030	42,120	14
15	42,990	43,080	43,180	43,270	43,370	43,460	43,560	43,650	43,740	43,840	43,930	44,020	44,120	44,210	44,300	44,390	44,480	44,580	44,670	44,760	44,850	15
16	45,480	45,580	45,690	45,790	45,890	45,990	46,090	46,180	46,280	46,380	46,480	46,580	46,680	46,770	46,870	46,970	47,070	47,160	47,260	47,350	47,450	16
17	49,550	49,660	49,770	49,880	49,980	50,090	50,190	50,300	50,410	50,510	50,620	50,720	50,830	50,930	51,040	51,140	51,250	51,350	51,460	51,560	51,670	17
18	53,620	53,740	53,850	53,970	54,080	54,190	54,300	54,420	54,530	54,640	54,760	54,870	54,980	55,090	55,210	55,320	55,430	55,550	55,660	55,780	55,890	18
19	57,700	57,820	57,940	58,060	58,170	58,290	58,410	58,530	58,650	58,770	58,890	59,010	59,130	59,250	59,380	59,500	59,620	59,740	59,860	59,990	60,110	19
20	60,960	61,160	61,370	61,570	61,780	61,980	62,190	62,400	62,600	62,810	63,020	63,220	63,430	63,640	63,850	64,050	64,260	64,470	64,680	64,890	65,080	20
21	64,220	64,510	64,800	65,090	65,380	65,670	65,970	66,260	66,550	66,840	67,140	67,430	67,730	68,020	68,320	68,610	68,910	69,200	69,500	69,800	70,050	21
22	67,480	67,860	68,240	68,610	68,990	69,370	69,740	70,120	70,500	70,880	71,260	71,640	72,020	72,400	72,790	73,170	73,550	73,940	74,320	74,710	75,020	22
23	67,480	67,860	68,240	68,610	68,990	69,370	69,740	70,120	70,500	70,880	71,260	71,640	72,020	72,400	72,790	73,170	73,550	73,940	74,320	74,710	75,040	23
24	67,480	67,860	68,240	68,610	68,990	69,370	69,740	70,120	70,500	70,880	71,260	71,640	72,020	72,400	72,790	73,170	73,550	73,940	74,320	74,710	75,070	24
25	67,480	67,860	68,240	68,610	68,990	69,370	69,740	70,120	70,500	70,880	71,260	71,640	72,020	72,400	72,790	73,170	73,550	73,940	74,320	74,710	75,090	25
26	67,480	67,860	68,240	68,610	68,990	69,370	69,740	70,120	70,500	70,880	71,260	71,640	72,020	72,400	72,790	73,170	73,550	73,940	74,320	74,710	75,090	26
27	67,480	67,860	68,240	68,610	68,990	69,370	69,740	70,120	70,500	70,880	71,260	71,640	72,020	72,400	72,790	73,170	73,550	73,940	74,320	74,710	75,090	27
28	67,480	67,860	68,240	68,610	68,990	69,370	69,740	70,120	70,500	70,880	71,260	71,640	72,020	72,400	72,790	73,170	73,550	73,940	74,320	74,710	75,090	28

MAY 2008

HEADWATER 800 to 804
TAILWATER 780.51 to 781.5

TELLICO DAM
SPILLWAY DISCHARGE
IN CUBIC FEET PER SECOND

GATE ARRANGEMENT	HEADWATER ELEVATION																				GATE ARRANGEMENT
	804.0	804.1	804.2	804.3	804.4	804.5	804.6	804.7	804.8	804.9	805.0	805.1	805.2	805.3	805.4	805.5	805.6	805.7	805.8	805.9	806.0	
1	2,500	2,510	2,510	2,520	2,520	2,530	2,530	2,540	2,540	2,550	2,550	2,560	2,570	2,570	2,580	2,580	2,590	2,590	2,600	2,600	2,610	1
2	5,410	5,430	5,440	5,450	5,460	5,470	5,480	5,500	5,510	5,520	5,530	5,540	5,550	5,560	5,580	5,590	5,600	5,610	5,620	5,630	5,640	2
3	8,430	8,440	8,460	8,480	8,500	8,520	8,530	8,550	8,570	8,590	8,610	8,620	8,640	8,660	8,680	8,700	8,710	8,730	8,750	8,770	8,780	3
4	11,400	11,420	11,450	11,480	11,500	11,530	11,560	11,580	11,610	11,630	11,660	11,690	11,710	11,740	11,760	11,790	11,810	11,840	11,860	11,890	11,920	4
5	14,910	14,940	14,970	15,010	15,040	15,070	15,100	15,140	15,170	15,200	15,240	15,270	15,300	15,330	15,360	15,400	15,430	15,460	15,490	15,520	15,560	5
6	18,250	18,290	18,330	18,370	18,410	18,450	18,490	18,530	18,560	18,600	18,640	18,680	18,720	18,760	18,800	18,830	18,870	18,910	18,950	18,980	19,020	6
7	21,580	21,620	21,670	21,710	21,760	21,800	21,840	21,890	21,930	21,980	22,020	22,060	22,110	22,150	22,190	22,230	22,280	22,320	22,360	22,410	22,450	7
8	24,790	24,840	24,890	24,940	24,990	25,040	25,080	25,130	25,180	25,230	25,280	25,320	25,370	25,420	25,470	25,510	25,560	25,610	25,660	25,700	25,750	8
9	27,820	27,880	27,930	27,990	28,040	28,090	28,150	28,200	28,250	28,310	28,360	28,410	28,470	28,520	28,570	28,630	28,680	28,730	28,790	28,840	28,890	9
10	30,720	30,780	30,840	30,900	30,960	31,020	31,080	31,140	31,190	31,250	31,310	31,370	31,430	31,490	31,550	31,610	31,660	31,720	31,780	31,840	31,900	10
11	33,490	33,560	33,630	33,690	33,760	33,820	33,890	33,950	34,020	34,080	34,150	34,210	34,280	34,340	34,410	34,470	34,530	34,600	34,660	34,730	34,790	11
12	36,460	36,540	36,610	36,680	36,750	36,820	36,900	36,970	37,040	37,110	37,180	37,250	37,320	37,390	37,470	37,540	37,610	37,680	37,750	37,820	37,890	12
13	39,320	39,400	39,480	39,560	39,640	39,720	39,800	39,880	39,960	40,040	40,110	40,190	40,270	40,350	40,420	40,500	40,580	40,660	40,730	40,810	40,890	13
14	42,120	42,200	42,290	42,380	42,470	42,550	42,640	42,730	42,810	42,900	42,990	43,070	43,160	43,250	43,330	43,420	43,500	43,590	43,670	43,760	43,840	14
15	44,850	44,950	45,040	45,140	45,230	45,330	45,420	45,520	45,610	45,710	45,800	45,890	45,990	46,080	46,170	46,270	46,360	46,450	46,550	46,640	46,730	15
16	47,450	47,550	47,660	47,760	47,860	47,970	48,070	48,170	48,270	48,370	48,480	48,580	48,680	48,780	48,880	48,980	49,080	49,180	49,280	49,380	49,480	16
17	51,670	51,780	51,890	52,000	52,110	52,220	52,330	52,440	52,550	52,660	52,780	52,890	53,000	53,110	53,220	53,330	53,440	53,550	53,660	53,770	53,880	17
18	55,890	56,010	56,120	56,240	56,360	56,480	56,600	56,720	56,840	56,960	57,080	57,200	57,320	57,440	57,560	57,680	57,800	57,920	58,040	58,160	58,280	18
19	60,110	60,230	60,360	60,480	60,610	60,740	60,860	60,990	61,120	61,250	61,370	61,500	61,630	61,760	61,890	62,020	62,150	62,290	62,420	62,550	62,680	19
20	65,080	65,240	65,390	65,550	65,710	65,860	66,020	66,180	66,340	66,490	66,650	66,810	66,960	67,120	67,280	67,440	67,590	67,750	67,910	68,070	68,220	20
21	70,050	70,240	70,430	70,610	70,800	70,990	71,180	71,370	71,550	71,740	71,920	72,110	72,300	72,480	72,670	72,850	73,030	73,220	73,400	73,580	73,770	21
22	75,020	75,240	75,460	75,680	75,900	76,120	76,340	76,550	76,770	76,990	77,200	77,410	77,630	77,840	78,050	78,260	78,470	78,690	78,890	79,100	79,310	22
23	75,040	75,320	75,600	75,870	76,150	76,420	76,700	76,970	77,250	77,520	77,790	78,070	78,340	78,610	78,880	79,160	79,430	79,700	79,970	80,240	80,510	23
24	75,070	75,400	75,730	76,060	76,390	76,730	77,060	77,390	77,720	78,050	78,390	78,720	79,050	79,380	79,720	80,050	80,380	80,720	81,050	81,380	81,720	24
25	75,090	75,480	75,870	76,250	76,640	77,030	77,420	77,810	78,200	78,590	78,980	79,370	79,760	80,160	80,550	80,940	81,340	81,730	82,130	82,520	82,920	25
26	75,090	75,480	75,870	76,250	76,640	77,030	77,420	77,810	78,200	78,590	78,980	79,370	79,760	80,160	80,550	80,940	81,340	81,730	82,130	82,520	82,920	26
27	75,090	75,480	75,870	76,250	76,640	77,030	77,420	77,810	78,200	78,590	78,980	79,370	79,760	80,160	80,550	80,940	81,340	81,730	82,130	82,520	82,920	27
28	75,090	75,480	75,870	76,250	76,640	77,030	77,420	77,810	78,200	78,590	78,980	79,370	79,760	80,160	80,550	80,940	81,340	81,730	82,130	82,520	82,920	28

GATE ARRANGEMENT	HEADWATER ELEVATION																				GATE ARRANGEMENT
	806.0	806.1	806.2	806.3	806.4	806.5	806.6	806.7	806.8	806.9	807.0	807.1	807.2	807.3	807.4	807.5	807.6	807.7	807.8	807.9	808.0	
1	2,610	2,610	2,620	2,620	2,630	2,630	2,640	2,640	2,650	2,650	2,660	2,660	2,670	2,670	2,680	2,680	2,690	2,690	2,700	2,700	2,710	1
2	5,640	5,660	5,670	5,680	5,690	5,700	5,710	5,720	5,730	5,740	5,760	5,770	5,780	5,790	5,800	5,810	5,820	5,830	5,840	5,850	5,870	2
3	8,780	8,800	8,820	8,840	8,850	8,870	8,890	8,910	8,920	8,940	8,960	8,970	8,990	9,010	9,030	9,040	9,060	9,080	9,090	9,110	9,130	3
4	11,920	11,940	11,970	11,990	12,020	12,040	12,070	12,090	12,120	12,140	12,170	12,190	12,220	12,240	12,270	12,290	12,320	12,340	12,370	12,390	12,420	4
5	15,560	15,590	15,620	15,650	15,680	15,710	15,740	15,780	15,810	15,840	15,870	15,900	15,930	15,960	15,990	16,020	16,050	16,080	16,110	16,140	16,170	5
6	19,020	19,060	19,100	19,130	19,170	19,210	19,240	19,280	19,320	19,350	19,390	19,430	19,460	19,500	19,540	19,570	19,610	19,640	19,680	19,710	19,750	6
7	22,450	22,490	22,530	22,570	22,620	22,660	22,700	22,740	22,780	22,820	22,870	22,910	22,950	22,990	23,030	23,070	23,110	23,150	23,190	23,230	23,270	7
8	25,750	25,800	25,840	25,890	25,940	25,980	26,030	26,080	26,120	26,170	26,220	26,260	26,310	26,350	26,400	26,450	26,490	26,540	26,580	26,630	26,670	8
9	28,890	28,940	28,990	29,050	29,100	29,150	29,200	29,260	29,310	29,360	29,410	29,460	29,510	29,570	29,620	29,670	29,720	29,770	29,820	29,870	29,920	9
10	31,900	31,950	32,010	32,070	32,130	32,190	32,240	32,300	32,360	32,410	32,470	32,530	32,590	32,640	32,700	32,760	32,810	32,870	32,920	32,980	33,040	10
11	34,790	34,850	34,920	34,980	35,040	35,110	35,170	35,230	35,300	35,360	35,420	35,480	35,550	35,610	35,670	35,730	35,790	35,860	35,920	35,980	36,040	11
12	37,890	37,960	38,030	38,100	38,170	38,230	38,300	38,370	38,440	38,510	38,580	38,650	38,720	38,780	38,850	38,920	38,990	39,060	39,120	39,190	39,260	12
13	40,890	40,960	41,040	41,120	41,190	41,270	41,340	41,420	41,500	41,570	41,650	41,720	41,800	41,870	41,950	42,020	42,100	42,170	42,240	42,320	42,390	13
14	43,840	43,930	44,010	44,100	44,180	44,270	44,350	44,430	44,520	44,600	44,680	44,770	44,850	44,930	45,020	45,100	45,180	45,260	45,350	45,430	45,510	14
15	46,730	46,820	46,920	47,010	47,100	47,190	47,280	47,370	47,460	47,550	47,650	47,740	47,830	47,920	48,010	48,100	48,190	48,280	48,360	48,450	48,540	15
16	49,480	49,580	49,680	49,780	49,880	49,980	50,070	50,170	50,270	50,370	50,470	50,560	50,660	50,760	50,860	50,950	51,050	51,140	51,240	51,340	51,430	16
17	53,880	53,990	54,100	54,210	54,320	54,430	54,540	54,650	54,760	54,870	54,980	55,090	55,200	55,310	55,410	55,520	55,630	55,740	55,850	55,950	56,060	17
18	58,280	58,400	58,520	58,640	58,760	58,890	59,010	59,130	59,250	59,370	59,490	59,610	59,730	59,850	59,970	60,090	60,210	60,330	60,450	60,570	60,690	18
19	62,680	62,810	62,940	63,080	63,210	63,340	63,470	63,610	63,740	63,870	64,000	64,140	64,270	64,400	64,530	64,660	64,800	64,930	65,060	65,190	65,320	19
20	68,220	68,350	68,470	68,600	68,720	68,850	68,970	69,090	69,210	69,340	69,460	69,580	69,700	69,820	69,940	70,050	70,170	70,290	70,400	70,520	70,630	20
21	73,770	73,890	74,000	74,120	74,240	74,350	74,470	74,580	74,690	74,800	74,920	75,020	75,130	75,230	75,340	75,440	75,540	75,650	75,750	75,850	75,950	21
22	79,310	79,420	79,530	79,640	79,750	79,860	79,960	80,070	80,170	80,270	80,370	80,470	80,560	80,650	80,740	80,830	80,920	81,010	81,090	81,180	81,260	22
23	80,510	80,720	80,930	81,130	81,340	81,540	81,740	81,950	82,150	82,350	82,550	82,750	82,940	83,140	83,330	83,530	83,720	83,920	84,110	84,300	84,490	23
24	81,720	82,020	82,320	82,620	82,920	83,220	83,530	83,830	84,130	84,430	84,730	85,030	85,330	85,630	85,930	86,230	86,530	86,820	87,120	87,420	87,720	24
25	82,920	83,320	83,710	84,110	84,510	84,910	85,310	85,710	86,110	86,510	86,910	87,310	87,710	88,120	88,520	88,920	89,330	89,730	90,140	90,540	90,950	25
26	82,920	83,320	83,710	84,110	84,510	84,910	85,310	85,710	86,110	86,510	86,910	87,310	87,710	88,120	88,520	88,920	89,330	89,730	90,140	90,540	90,950	26
27	82,920	83,320	83,710	84,110	84,510	84,910	85,310	85,710	86,110	86,510	86,910	87,310	87,710	88,120	88,520	88,920	89,330	89,730	90,140	90,540	90,950	27
28	82,920	83,320	83,710	84,110	84,510	84,910	85,310	85,710	86,110	86,510	86,910	87,310	87,710	88,120	88,520	88,920	89,330	89,730	90,140	90,540	90,950	28

HEADWATER 804 to 808
TAILWATER 780.51 to 781.5

MAY 2008

TELLICO DAM

SPILLWAY DISCHARGE

IN CUBIC FEET PER SECOND

HEADWATER ELEVATION

GATE ARRANGEMENT	808.0	808.1	808.2	808.3	808.4	808.5	808.6	808.7	808.8	808.9	809.0	809.1	809.2	809.3	809.4	809.5	809.6	809.7	809.8	809.9	810.0	GATE ARRANGEMENT
1	2,710	2,710	2,720	2,720	2,730	2,730	2,740	2,740	2,750	2,750	2,760	2,760	2,770	2,770	2,780	2,780	2,790	2,790	2,800	2,800	2,810	1
2	5,870	5,880	5,890	5,900	5,910	5,920	5,930	5,940	5,950	5,960	5,970	5,980	5,990	6,000	6,020	6,030	6,040	6,050	6,060	6,070	6,080	2
3	9,130	9,150	9,160	9,180	9,200	9,210	9,230	9,250	9,260	9,280	9,300	9,310	9,330	9,350	9,360	9,380	9,400	9,410	9,430	9,440	9,460	3
4	12,420	12,440	12,470	12,490	12,520	12,540	12,560	12,590	12,610	12,640	12,660	12,690	12,710	12,730	12,760	12,780	12,810	12,830	12,860	12,880	12,900	4
5	16,170	16,200	16,230	16,260	16,290	16,320	16,350	16,380	16,410	16,440	16,470	16,500	16,530	16,560	16,590	16,620	16,650	16,680	16,700	16,730	16,760	5
6	19,750	19,780	19,820	19,850	19,890	19,920	19,960	19,990	20,030	20,060	20,100	20,130	20,160	20,200	20,230	20,270	20,300	20,330	20,370	20,400	20,430	6
7	23,270	23,310	23,350	23,390	23,430	23,470	23,510	23,550	23,590	23,630	23,670	23,710	23,750	23,790	23,830	23,870	23,910	23,950	23,980	24,020	24,060	7
8	26,670	26,720	26,770	26,810	26,860	26,900	26,950	26,990	27,040	27,080	27,130	27,170	27,210	27,260	27,300	27,350	27,390	27,440	27,480	27,520	27,570	8
9	29,920	29,980	30,030	30,080	30,130	30,180	30,230	30,280	30,330	30,380	30,430	30,470	30,520	30,570	30,620	30,670	30,720	30,770	30,820	30,870	30,920	9
10	33,040	33,090	33,150	33,210	33,260	33,320	33,370	33,430	33,480	33,540	33,590	33,650	33,700	33,760	33,820	33,870	33,920	33,980	34,030	34,090	34,140	10
11	36,040	36,100	36,160	36,220	36,280	36,340	36,400	36,460	36,520	36,580	36,640	36,700	36,760	36,820	36,880	36,940	37,000	37,060	37,120	37,180	37,230	11
12	39,260	39,330	39,390	39,460	39,530	39,600	39,660	39,730	39,800	39,860	39,930	40,000	40,060	40,130	40,190	40,260	40,330	40,390	40,460	40,520	40,590	12
13	42,390	42,470	42,540	42,620	42,690	42,770	42,840	42,920	42,990	43,070	43,140	43,210	43,290	43,360	43,440	43,510	43,580	43,660	43,730	43,800	43,880	13
14	45,510	45,590	45,670	45,750	45,830	45,910	45,990	46,070	46,150	46,230	46,300	46,380	46,460	46,540	46,620	46,700	46,770	46,850	46,930	47,010	47,090	14
15	48,540	48,630	48,720	48,810	48,900	48,980	49,070	49,160	49,250	49,330	49,420	49,510	49,600	49,680	49,770	49,850	49,940	50,030	50,110	50,200	50,280	15
16	51,430	51,530	51,630	51,730	51,820	51,920	52,020	52,110	52,210	52,310	52,400	52,500	52,600	52,690	52,790	52,880	52,980	53,070	53,170	53,260	53,360	16
17	56,060	56,170	56,280	56,390	56,490	56,600	56,710	56,820	56,920	57,030	57,140	57,250	57,350	57,460	57,560	57,670	57,780	57,880	57,990	58,090	58,200	17
18	60,690	60,810	60,930	61,050	61,170	61,290	61,400	61,520	61,640	61,760	61,870	61,990	62,110	62,220	62,340	62,460	62,570	62,690	62,800	62,920	63,040	18
19	65,320	65,450	65,580	65,710	65,840	65,970	66,100	66,220	66,350	66,480	66,610	66,740	66,860	66,990	67,120	67,240	67,370	67,500	67,620	67,750	67,870	19
20	70,630	70,750	70,870	70,980	71,100	71,210	71,320	71,440	71,550	71,660	71,770	71,880	71,990	72,090	72,200	72,310	72,410	72,520	72,620	72,730	72,830	20
21	75,950	76,050	76,150	76,250	76,350	76,450	76,550	76,650	76,740	76,840	76,930	77,020	77,110	77,200	77,280	77,370	77,460	77,540	77,620	77,710	77,790	21
22	81,260	81,350	81,440	81,520	81,610	81,690	81,780	81,860	81,940	82,020	82,100	82,170	82,230	82,300	82,370	82,430	82,500	82,560	82,630	82,690	82,750	22
23	84,490	84,690	84,880	85,070	85,270	85,460	85,650	85,840	86,030	86,220	86,410	86,590	86,780	86,960	87,140	87,320	87,500	87,680	87,860	88,040	88,220	23
24	87,720	88,020	88,320	88,620	88,920	89,220	89,520	89,820	90,120	90,420	90,730	91,020	91,320	91,620	91,920	92,210	92,510	92,810	93,100	93,400	93,700	24
25	90,950	91,360	91,760	92,170	92,580	92,990	93,400	93,810	94,220	94,630	95,040	95,450	95,860	96,280	96,690	97,100	97,520	97,930	98,340	98,760	99,180	25
26	90,950	91,360	91,760	92,170	92,580	92,990	93,400	93,810	94,220	94,630	95,040	95,450	95,860	96,280	96,690	97,100	97,520	97,930	98,340	98,760	99,180	26
27	90,950	91,360	91,760	92,170	92,580	92,990	93,400	93,810	94,220	94,630	95,040	95,450	95,860	96,280	96,690	97,100	97,520	97,930	98,340	98,760	99,180	27
28	90,950	91,360	91,760	92,170	92,580	92,990	93,400	93,810	94,220	94,630	95,040	95,450	95,860	96,280	96,690	97,100	97,520	97,930	98,340	98,760	99,180	28

HEADWATER ELEVATION

GATE ARRANGEMENT	810.0	810.1	810.2	810.3	810.4	810.5	810.6	810.7	810.8	810.9	811.0	811.1	811.2	811.3	811.4	811.5	811.6	811.7	811.8	811.9	812.0	GATE ARRANGEMENT
1	2,810	2,810	2,820	2,820	2,830	2,830	2,840	2,840	2,850	2,850	2,860	2,860	2,870	2,870	2,880	2,880	2,880	2,890	2,890	2,900	2,900	1
2	6,080	6,090	6,100	6,110	6,120	6,130	6,140	6,150	6,160	6,170	6,180	6,190	6,200	6,210	6,220	6,230	6,240	6,250	6,260	6,270	6,280	2
3	9,460	9,480	9,490	9,510	9,530	9,540	9,560	9,570	9,590	9,610	9,620	9,640	9,650	9,670	9,690	9,700	9,720	9,730	9,750	9,770	9,780	3
4	12,900	12,930	12,950	12,970	13,000	13,020	13,050	13,070	13,090	13,120	13,140	13,160	13,190	13,210	13,230	13,260	13,280	13,300	13,330	13,350	13,370	4
5	16,760	16,790	16,820	16,850	16,880	16,910	16,930	16,960	16,990	17,020	17,050	17,080	17,110	17,130	17,160	17,190	17,220	17,250	17,280	17,300	17,330	5
6	20,430	20,470	20,500	20,530	20,560	20,600	20,630	20,660	20,700	20,730	20,760	20,790	20,830	20,860	20,890	20,920	20,950	20,990	21,020	21,050	21,080	6
7	24,060	24,100	24,140	24,180	24,220	24,250	24,290	24,330	24,370	24,410	24,450	24,480	24,520	24,560	24,600	24,640	24,670	24,710	24,750	24,790	24,820	7
8	27,570	27,610	27,650	27,700	27,740	27,780	27,830	27,870	27,910	27,960	28,000	28,040	28,080	28,130	28,170	28,210	28,250	28,290	28,340	28,380	28,420	8
9	30,920	30,970	31,020	31,070	31,110	31,160	31,210	31,260	31,310	31,360	31,410	31,450	31,500	31,550	31,600	31,650	31,700	31,740	31,790	31,840	31,890	9
10	34,140	34,200	34,250	34,310	34,360	34,420	34,470	34,520	34,580	34,630	34,690	34,740	34,790	34,850	34,900	34,950	35,010	35,060	35,110	35,170	35,220	10
11	37,230	37,290	37,350	37,410	37,470	37,530	37,580	37,640	37,700	37,760	37,820	37,870	37,930	37,990	38,050	38,100	38,160	38,220	38,280	38,330	38,390	11
12	40,590	40,650	40,720	40,780	40,850	40,910	40,980	41,040	41,110	41,170	41,240	41,300	41,360	41,430	41,490	41,560	41,620	41,680	41,750	41,810	41,870	12
13	43,880	43,950	44,020	44,090	44,170	44,240	44,310	44,380	44,460	44,530	44,600	44,670	44,740	44,820	44,890	44,960	45,030	45,100	45,170	45,240	45,310	13
14	47,090	47,160	47,240	47,320	47,390	47,470	47,550	47,620	47,700	47,780	47,850	47,930	48,010	48,080	48,160	48,230	48,310	48,380	48,460	48,530	48,610	14
15	50,280	50,370	50,460	50,540	50,630	50,710	50,800	50,880	50,970	51,050	51,130	51,220	51,300	51,390	51,470	51,550	51,640	51,720	51,800	51,890	51,970	15
16	53,360	53,450	53,550	53,640	53,740	53,830	53,920	54,020	54,110	54,210	54,300	54,390	54,480	54,580	54,670	54,760	54,860	54,950	55,040	55,130	55,220	16
17	58,200	58,300	58,410	58,510	58,620	58,720	58,830	58,930	59,030	59,140	59,240	59,350	59,450	59,550	59,660	59,760	59,860	59,970	60,070	60,170	60,280	17
18	63,040	63,150	63,270	63,380	63,500	63,610	63,730	63,840	63,960	64,070	64,180	64,300	64,410	64,530	64,640	64,760	64,870	64,990	65,100	65,220	65,330	18
19	67,870	68,000	68,130	68,250	68,380	68,500	68,630	68,750	68,880	69,000	69,130	69,250	69,380	69,500	69,630	69,750	69,880	70,010	70,130	70,260	70,380	19
20	72,830	72,940	73,050	73,160	73,270	73,380	73,490	73,590	73,700	73,810	73,910	74,040	74,170	74,290	74,420	74,550	74,670	74,800	74,930	75,050	75,180	20
21	77,790	77,880	77,980	78,070	78,160	78,250	78,340	78,430	78,520	78,610	78,700	78,830	78,960	79,090	79,210	79,340	79,470	79,590	79,720	79,850	79,970	21
22	82,750	82,830	82,900	82,980	83,050	83,130	83,200	83,270	83,350	83,420	83,490	83,620	83,750	83,880	84,000	84,130	84,260	84,390	84,510	84,640	84,770	22
23	88,220	88,410	88,600	88,790	88,980	89,170	89,360	89,550	89,680	89,810	89,940	90,110	90,280	90,440	90,610	90,770	90,940	91,100	91,270	91,430	91,590	23
24	93,700	94,000	94,310	94,610	94,910	95,220	95,520	95,820	96,020	96,210	96,390	96,600	96,800	97,010	97,210	97,410	97,620	97,820	98,020	98,220	98,420	24
25	99,180	99,590	100,000	100,400	100,800	101,300	101,700	102,100	102,400	102,600	102,800	103,100	103,300	103,600	103,800	104,100	104,300	104,500	104,800	105,000	105,200	25
26	99,180	99,590	100,000	100,400	100,800	101,300	101,700	102,100	102,400	102,700	103,000	103,300	103,600	103,900	104,200	104,500	104,800	105,100	105,400	105,700	106,000	26
27	99,180	99,590	100,000	100,400	100,800	101,300	101,700	102,100	102,500	102,800	103,200	103,500	103,900	104,300	104,600	105,000	105,400	105,700	106,100	106,400	106,800	27
28	99,180	99,590	100,000	100,400	100,800	101,300	101,700	102,100	102,500	102,900	103,400	103,800	104,200	104,600	105,000	105,500	105,900	106,300	106,700	107,200	107,600	28

MAY 2008

HEADWATER 808 to 812
TAILWATER 780.51 to 781.5

TELLICO DAM
SPILLWAY DISCHARGE
IN CUBIC FEET PER SECOND

GATE ARRANGEMENT	HEADWATER ELEVATION																				GATE ARRANGEMENT
	812.0	812.1	812.2	812.3	812.4	812.5	812.6	812.7	812.8	812.9	813.0	813.1	813.2	813.3	813.4	813.5	813.6	813.7	813.8	813.9	814.0	
1	2,900	2,910	2,910	2,920	2,920	2,930	2,930	2,940	2,940	2,950	2,950	2,950	2,960	2,960	2,970	2,970	2,980	2,980	2,990	2,990	3,000	1
2	6,280	6,290	6,300	6,310	6,330	6,340	6,350	6,360	6,370	6,380	6,390	6,400	6,410	6,420	6,420	6,430	6,440	6,450	6,460	6,470	6,480	2
3	9,780	9,800	9,810	9,830	9,840	9,860	9,880	9,890	9,910	9,920	9,940	9,950	9,970	9,980	10,000	10,020	10,030	10,050	10,060	10,080	10,090	3
4	13,370	13,390	13,420	13,440	13,460	13,490	13,510	13,530	13,550	13,580	13,600	13,620	13,640	13,670	13,690	13,710	13,730	13,760	13,780	13,800	13,820	4
5	17,330	17,360	17,390	17,420	17,450	17,470	17,500	17,530	17,560	17,590	17,610	17,640	17,670	17,700	17,730	17,750	17,780	17,810	17,840	17,870	17,890	5
6	21,080	21,110	21,150	21,180	21,210	21,240	21,270	21,300	21,340	21,370	21,400	21,430	21,460	21,490	21,520	21,560	21,590	21,620	21,650	21,680	21,710	6
7	24,820	24,860	24,900	24,940	24,970	25,010	25,050	25,090	25,130	25,160	25,200	25,240	25,280	25,310	25,350	25,390	25,420	25,460	25,500	25,540	25,570	7
8	28,420	28,460	28,500	28,540	28,580	28,620	28,670	28,710	28,750	28,790	28,830	28,870	28,910	28,950	28,990	29,030	29,070	29,110	29,150	29,190	29,230	8
9	31,890	31,930	31,980	32,030	32,080	32,120	32,170	32,220	32,260	32,310	32,360	32,400	32,450	32,500	32,540	32,590	32,640	32,680	32,730	32,780	32,820	9
10	35,220	35,270	35,320	35,370	35,420	35,480	35,530	35,580	35,630	35,680	35,730	35,780	35,830	35,880	35,930	35,980	36,030	36,080	36,130	36,180	36,230	10
11	38,390	38,450	38,500	38,560	38,620	38,670	38,730	38,780	38,840	38,900	38,950	39,010	39,060	39,120	39,180	39,230	39,290	39,340	39,400	39,450	39,510	11
12	41,870	41,940	42,000	42,060	42,120	42,190	42,250	42,310	42,370	42,430	42,500	42,560	42,620	42,680	42,740	42,800	42,870	42,930	42,990	43,050	43,110	12
13	45,310	45,380	45,450	45,520	45,590	45,660	45,730	45,790	45,860	45,930	46,000	46,070	46,140	46,200	46,270	46,340	46,410	46,470	46,540	46,610	46,670	13
14	48,610	48,680	48,760	48,830	48,910	48,980	49,060	49,130	49,210	49,280	49,360	49,430	49,500	49,580	49,650	49,730	49,800	49,870	49,950	50,020	50,090	14
15	51,970	52,050	52,130	52,210	52,300	52,380	52,460	52,540	52,620	52,700	52,780	52,860	52,940	53,020	53,100	53,180	53,260	53,340	53,420	53,500	53,580	15
16	55,220	55,310	55,400	55,480	55,570	55,650	55,740	55,820	55,910	55,990	56,080	56,160	56,250	56,330	56,420	56,500	56,590	56,670	56,750	56,840	56,920	16
17	60,280	60,380	60,480	60,580	60,670	60,770	60,870	60,970	61,070	61,170	61,270	61,370	61,460	61,560	61,660	61,760	61,850	61,950	62,050	62,140	62,240	17
18	65,330	65,440	65,560	65,670	65,780	65,890	66,010	66,120	66,230	66,340	66,460	66,570	66,680	66,790	66,900	67,010	67,120	67,230	67,340	67,450	67,560	18
19	70,380	70,510	70,640	70,760	70,890	71,010	71,140	71,270	71,390	71,520	71,640	71,770	71,890	72,020	72,140	72,270	72,390	72,520	72,640	72,760	72,880	19
20	75,180	75,310	75,440	75,570	75,710	75,840	75,970	76,100	76,230	76,370	76,500	76,630	76,770	76,910	77,040	77,180	77,310	77,450	77,580	77,720	77,850	20
21	79,970	80,110	80,250	80,390	80,530	80,660	80,800	80,940	81,080	81,210	81,350	81,500	81,650	81,790	81,940	82,090	82,240	82,380	82,530	82,670	82,820	21
22	84,770	84,910	85,060	85,200	85,350	85,490	85,630	85,780	85,920	86,060	86,200	86,360	86,520	86,680	86,840	87,000	87,160	87,320	87,470	87,630	87,790	22
23	91,590	91,710	91,820	91,940	92,050	92,160	92,270	92,380	92,500	92,600	92,710	92,830	92,950	93,070	93,190	93,310	93,430	93,540	93,660	93,770	93,890	23
24	98,420	98,500	98,590	98,670	98,750	98,830	98,910	98,990	99,070	99,150	99,220	99,300	99,380	99,460	99,540	99,620	99,690	99,770	99,840	99,920	99,990	24
25	105,200	105,300	105,400	105,400	105,500	105,500	105,600	105,600	105,600	105,700	105,700	105,800	105,800	105,900	105,900	105,900	106,000	106,000	106,000	106,100	106,100	25
26	106,000	106,200	106,400	106,600	106,700	106,900	107,100	107,300	107,400	107,600	107,800	107,900	108,100	108,300	108,500	108,600	108,800	109,000	109,100	109,300	109,500	26
27	106,800	107,100	107,400	107,700	108,000	108,300	108,600	108,900	109,200	109,500	109,800	110,100	110,400	110,700	111,000	111,300	111,600	111,900	112,200	112,500	112,800	27
28	107,600	108,000	108,400	108,900	109,300	109,700	110,100	110,600	111,000	111,400	111,900	112,300	112,700	113,200	113,600	114,000	114,400	114,900	115,300	115,700	116,200	28

GATE ARRANGEMENT	HEADWATER ELEVATION																				GATE ARRANGEMENT
	814.0	814.1	814.2	814.3	814.4	814.5	814.6	814.7	814.8	814.9	815.0	815.1	815.2	815.3	815.4	815.5	815.6	815.7	815.8	815.9	816.0	
1	3,000	3,000	3,000	3,010	3,010	3,020	3,020	3,030	3,030	3,040	3,040	3,050	3,050	3,050	3,060	3,060						1
2	6,480	6,490	6,500	6,510	6,520	6,530	6,540	6,550	6,560	6,570	6,580	6,590	6,600	6,610	6,620	6,630	6,640	6,650	6,660	6,670	6,680	2
3	10,090	10,110	10,120	10,140	10,150	10,170	10,180	10,200	10,210	10,230	10,240	10,260	10,270	10,290	10,300	10,320	10,330	10,350	10,360	10,380	10,390	3
4	13,820	13,840	13,870	13,890	13,910	13,930	13,950	13,980	14,000	14,020	14,040	14,060	14,090	14,110	14,130	14,150	14,170	14,190	14,210	14,240	14,260	4
5	17,890	17,920	17,950	17,980	18,000	18,030	18,060	18,090	18,110	18,140	18,170	18,200	18,220	18,250	18,280	18,300	18,330	18,360	18,390	18,410	18,440	5
6	21,710	21,740	21,780	21,810	21,840	21,870	21,900	21,930	21,970	22,000	22,030	22,060	22,090	22,120	22,160	22,190	22,220	22,250	22,290	22,320	22,350	6
7	25,570	25,610	25,650	25,680	25,720	25,760	25,790	25,830	25,870	25,900	25,940	25,980	26,010	26,050	26,080	26,120	26,160	26,190	26,230	26,260	26,300	7
8	29,230	29,270	29,310	29,350	29,390	29,420	29,460	29,500	29,540	29,580	29,620	29,660	29,700	29,730	29,770	29,810	29,850	29,890	29,930	29,960	30,000	8
9	32,820	32,870	32,910	32,960	33,010	33,050	33,100	33,140	33,190	33,240	33,280	33,330	33,370	33,420	33,460	33,510	33,550	33,600	33,640	33,690	33,740	9
10	36,230	36,280	36,330	36,380	36,430	36,480	36,530	36,580	36,630	36,680	36,730	36,780	36,830	36,880	36,930	36,980	37,030	37,070	37,120	37,170	37,220	10
11	39,510	39,560	39,620	39,670	39,730	39,780	39,840	39,890	39,940	40,000	40,050	40,110	40,160	40,220	40,270	40,320	40,380	40,430	40,490	40,540	40,590	11
12	43,110	43,170	43,230	43,290	43,350	43,410	43,480	43,540	43,600	43,660	43,720	43,780	43,840	43,900	43,960	44,020	44,080	44,130	44,190	44,250	44,310	12
13	46,670	46,740	46,810	46,870	46,940	47,010	47,070	47,140	47,210	47,270	47,340	47,410	47,470	47,540	47,600	47,670	47,730	47,800	47,870	47,930	48,000	13
14	50,090	50,170	50,240	50,310	50,380	50,460	50,530	50,600	50,670	50,750	50,820	50,890	50,960	51,030	51,100	51,180	51,250	51,320	51,390	51,460	51,530	14
15	53,580	53,660	53,740	53,820	53,900	53,980	54,060	54,130	54,210	54,290	54,370	54,450	54,530	54,600	54,680	54,760	54,840	54,910	54,990	55,070	55,150	15
16	56,920	57,000	57,090	57,170	57,250	57,330	57,420	57,500	57,580	57,660	57,750	57,830	57,910	57,990	58,070	58,150	58,240	58,320	58,400	58,480	58,560	16
17	62,240	62,340	62,430	62,530	62,620	62,720	62,810	62,910	63,000	63,090	63,190	63,280	63,370	63,460	63,550	63,640	63,730	63,820	63,910	64,000	64,090	17
18	67,560	67,670	67,780	67,890	67,990	68,100	68,210	68,310	68,420	68,520	68,620	68,730	68,830	68,930	69,030	69,130	69,230	69,330	69,430	69,520	69,620	18
19	72,880	73,000	73,120	73,240	73,360	73,480	73,600	73,720	73,830	73,950	74,060	74,180	74,290	74,400	74,510	74,620	74,730	74,840	74,940	75,050	75,150	19
20	77,850	77,990	78,120	78,250	78,380	78,520	78,650	78,780	78,910	79,040	79,170	79,290	79,420	79,550	79,670	79,800	79,920	80,040	80,160	80,280	80,400	20
21	82,820	82,970	83,110	83,260	83,400	83,550	83,690	83,840	83,980	84,120	84,270	84,410	84,550	84,690	84,830	84,970	85,110	85,250	85,390	85,520	85,660	21
22	87,790	87,950	88,110	88,270	88,420	88,580	88,740	88,900	89,050	89,210	89,370	89,520	89,680	89,840	89,990	90,150	90,300	90,460	90,610	90,760	90,920	22
23	93,890	94,020	94,160	94,290	94,420	94,560	94,690	94,820	94,950	95,080	95,210	95,340	95,470	95,600	95,720	95,850	95,980	96,100	96,230	96,350	96,480	23
24	99,990	100,100	100,200	100,300	100,400	100,500	100,600	100,700	100,800	100,900	101,100	101,200	101,300	101,400	101,500	101,600	101,700	101,800	101,800	101,900	102,000	24
25	106,100	106,200	106,300	106,300	106,400	106,500	106,600	106,700	106,700	106,800	106,900	107,000	107,000	107,100	107,200	107,300	107,300	107,400	107,500	107,500	107,600	25
26	109,500	109,700	109,900	110,100	110,300	110,500	110,700	110,900	111,000	111,200	111,500	111,600	111,600	111,700	111,700	111,800	111,800	111,900	111,900	112,000	112,000	26
27	112,800	113,100	113,500	113,800	114,100	114,400	114,700	115,000	115,400	115,700	116,200	116,200	116,200	116,200	116,300	116,300	116,300	116,300	116,400	116,400	116,400	27
28	116,200	116,600	117,000	117,500	117,900	118,400	118,800	119,200	119,700	120,100	120,800	120,800	120,800	120,800	120,800	120,800	120,800	120,800	120,800	120,800	120,800	28

HEADWATER 812 to 816
TAILWATER 780.51 to 781.5

See special instruction for preventing gate overflow on page 2.

MAY 2008

TELLICO DAM
SPILLWAY DISCHARGE
IN CUBIC FEET PER SECOND

GATE ARRANGEMENT	HEADWATER ELEVATION																				GATE ARRANGEMENT
	816.0	816.1	816.2	816.3	816.4	816.5	816.6	816.7	816.8	816.9	817.0	817.1	817.2	817.3	817.4	817.5	817.6	817.7	817.8	817.9	818.0	
1																						1
2	6,680	6,690	6,700																			2
3	10,390	10,410	10,420	10,440	10,450	10,470	10,480	10,500	10,510	10,530	10,540											3
4	14,260	14,280	14,300	14,320	14,340	14,360	14,380	14,400	14,420	14,450	14,470	14,670	15,030	15,490	16,040	16,670	17,360	18,110				4
5	18,440	18,470	18,490	18,520	18,550	18,570	18,600	18,630	18,650	18,680	18,700	18,910	19,280	19,750	20,300	20,930	21,630	22,390	23,200	24,080	25,010	5
6	22,350	22,380	22,420	22,450	22,480	22,520	22,550	22,580	22,620	22,650	22,680	22,900	23,270	23,750	24,310	24,950	25,650	26,420	27,250	28,130	29,070	6
7	26,300	26,330	26,370	26,400	26,440	26,470	26,510	26,540	26,580	26,610	26,650	26,870	27,240	27,720	28,280	28,920	29,620	30,390	31,210	32,100	33,030	7
8	30,000	30,040	30,080	30,120	30,160	30,190	30,230	30,270	30,310	30,340	30,380	30,600	30,980	31,460	32,020	32,660	33,370	34,140	34,970	35,860	36,800	8
9	33,740	33,780	33,820	33,860	33,910	33,950	33,990	34,040	34,080	34,120	34,170	34,390	34,770	35,260	35,830	36,470	37,190	37,960	38,800	39,690	40,640	9
10	37,220	37,270	37,320	37,370	37,410	37,460	37,510	37,560	37,610	37,650	37,700	37,930	38,320	38,810	39,390	40,040	40,750	41,530	42,370	43,270	44,220	10
11	40,590	40,650	40,700	40,750	40,810	40,860	40,910	40,970	41,020	41,070	41,130	41,360	41,750	42,250	42,830	43,480	44,210	44,990	45,840	46,740	47,690	11
12	44,310	44,370	44,430	44,490	44,550	44,610	44,670	44,730	44,790	44,840	44,900	45,150	45,540	46,040	46,630	47,290	48,020	48,810	49,660	50,570	51,530	12
13	48,000	48,060	48,130	48,190	48,260	48,320	48,380	48,450	48,510	48,580	48,640	48,890	49,290	49,800	50,390	51,060	51,790	52,590	53,450	54,360	55,330	13
14	51,530	51,600	51,670	51,740	51,820	51,890	51,960	52,030	52,100	52,170	52,240	52,490	52,900	53,410	54,010	54,680	55,420	56,220	57,090	58,000	58,980	14
15	55,150	55,220	55,300	55,380	55,450	55,530	55,610	55,680	55,760	55,840	55,910	56,170	56,590	57,100	57,710	58,390	59,130	59,940	60,810	61,730	62,710	15
16	58,560	58,640	58,710	58,790	58,860	58,940	59,010	59,080	59,160	59,230	59,310	59,570	59,980	60,500	61,100	61,770	62,520	63,320	64,190	65,110	66,090	16
17	64,090	64,170	64,260	64,340	64,420	64,500	64,590	64,670	64,750	64,830	64,910	65,170	65,590	66,110	66,710	67,390	68,140	68,950	69,820	70,740	71,720	17
18	69,620	69,710	69,800	69,890	69,980	70,070	70,160	70,250	70,340	70,420	70,510	70,770	71,200	71,720	72,330	73,010	73,770	74,580	75,450	76,380	77,360	18
19	75,150	75,250	75,350	75,450	75,550	75,640	75,740	75,830	75,920	76,020	76,110	76,380	76,810	77,340	77,950	78,640	79,390	80,210	81,080	82,010	83,000	19
20	80,400	80,520	80,640	80,760	80,870	80,990	81,100	81,220	81,330	81,440	81,550	81,840	82,290	82,840	83,480	84,190	84,960	85,800	86,700	87,650	88,660	20
21	85,660	85,800	85,930	86,070	86,200	86,340	86,470	86,600	86,730	86,860	86,990	87,310	87,780	88,350	89,010	89,740	90,530	91,390	92,310	93,290	94,320	21
22	90,920	91,070	91,220	91,380	91,530	91,680	91,830	91,990	92,140	92,290	92,440	92,770	93,260	93,860	94,530	95,290	96,110	96,990	97,930	98,930	99,980	22
23	96,480	96,620	96,770	96,910	97,060	97,200	97,340	97,490	97,630	97,770	97,910	98,240	98,720	99,300	99,970	100,700	101,500	102,400	103,300	104,300	105,400	23
24	102,000	102,200	102,300	102,400	102,600	102,700	102,900	103,000	103,100	103,300	103,400	103,700	104,200	104,700	105,400	106,100	106,900	107,800	108,700	109,700	110,700	24
25	107,600	107,700	107,900	108,000	108,100	108,200	108,400	108,500	108,600	108,700	108,900	109,200	109,600	110,200	110,800	111,600	112,300	113,200	114,100	115,100	116,100	25
26	112,000	112,100	112,200	112,300	112,400	112,500	112,500	112,600	112,700	112,800	112,900	113,200	113,600	114,100	114,700	115,400	116,200	117,000	117,900	118,800	119,800	26
27	116,400	116,500	116,500	116,600	116,600	116,700	116,700	116,800	116,800	116,900	116,900	117,100	117,500	118,000	118,600	119,300	120,000	120,800	121,600	122,500	123,400	27
28	120,800	120,800	120,900	120,900	120,900	120,900	120,900	120,900	120,900	120,900	120,900	121,100	121,500	121,900	122,500	123,100	123,800	124,500	125,300	126,200	127,100	28

GATE ARRANGEMENT	HEADWATER ELEVATION																				GATE ARRANGEMENT
	818.0	818.1	818.2	818.3	818.4	818.5	818.6	818.7	818.8	818.9	819.0	819.1	819.2	819.3	819.4	819.5	819.6	819.7	819.8	819.9	820.0	
1																						1
2																						2
3																						3
4																						4
5	25,010	25,990	27,020	28,100	29,230																	5
6	29,070	30,060	31,090	32,180	33,320	34,500	35,730	37,000	38,310	39,670	41,070	42,510										6
7	33,030	34,020	35,060	36,150	37,280	38,470	39,690	40,960	42,280	43,630	45,030	46,470	47,950	49,470	51,030	52,630	54,260	55,940	57,650			7
8	36,800	37,790	38,830	39,920	41,060	42,250	43,480	44,750	46,070	47,430	48,830	50,270	51,760	53,280	54,840	56,440	58,080	59,760	61,480	63,230	65,020	8
9	40,640	41,630	42,680	43,780	44,920	46,110	47,340	48,620	49,950	51,310	52,720	54,160	55,650	57,180	58,750	60,360	62,000	63,680	65,410	67,160	68,960	9
10	44,220	45,220	46,280	47,380	48,530	49,720	50,960	52,240	53,570	54,940	56,350	57,810	59,300	60,830	62,410	64,020	65,670	67,360	69,080	70,840	72,640	10
11	47,690	48,700	49,760	50,870	52,020	53,220	54,460	55,750	57,080	58,460	59,880	61,330	62,830	64,370	65,950	67,560	69,220	70,910	72,640	74,410	76,210	11
12	51,530	52,540	53,600	54,720	55,870	57,080	58,330	59,620	60,960	62,340	63,760	65,230	66,730	68,270	69,860	71,480	73,140	74,840	76,570	78,350	80,160	12
13	55,330	56,340	57,410	58,530	59,690	60,900	62,160	63,460	64,800	66,190	67,620	69,090	70,600	72,140	73,730	75,360	77,030	78,730	80,470	82,250	84,070	13
14	58,980	60,000	61,070	62,200	63,370	64,580	65,850	67,150	68,500	69,890	71,320	72,800	74,310	75,870	77,460	79,100	80,770	82,480	84,220	86,010	87,830	14
15	62,710	63,740	64,820	65,950	67,130	68,350	69,610	70,930	72,280	73,680	75,120	76,600	78,120	79,680	81,280	82,920	84,590	86,310	88,060	89,850	91,680	15
16	66,090	67,110	68,190	69,320	70,490	71,710	72,980	74,290	75,640	77,030	78,470	79,950	81,460	83,020	84,620	86,260	87,930	89,640	91,390	93,180	95,000	16
17	71,720	72,750	73,830	74,960	76,140	77,360	78,620	79,930	81,290	82,680	84,120	85,600	87,110	88,670	90,270	91,910	93,580	95,290	97,040	98,830	100,700	17
18	77,360	78,390	79,470	80,600	81,780	83,000	84,270	85,580	86,930	88,330	89,770	91,250	92,760	94,320	95,920	97,560	99,230	100,900	102,700	104,500	106,300	18
19	83,000	84,030	85,110	86,250	87,420	88,650	89,920	91,230	92,580	93,980	95,420	96,900	98,410	99,970	101,600	103,200	104,900	106,600	108,300	110,100	111,900	19
20	88,660	89,710	90,820	91,980	93,180	94,430	95,720	97,050	98,430	99,850	101,300	102,800	104,400	105,900	107,600	109,200	110,900	112,700	114,400	116,200	118,100	20
21	94,320	95,400	96,530	97,710	98,930	100,200	101,500	102,900	104,300	105,700	107,200	108,700	110,300	111,900	113,600	115,200	117,000	118,700	120,500	122,400	124,200	21
22	99,980	101,100	102,200	103,400	104,700	106,000	107,300	108,700	110,100	111,600	113,100	114,700	116,300	117,900	119,600	121,300	123,000	124,800	126,600	128,500	130,400	22
23	105,400	106,500	107,600	108,800	110,100	111,400	112,700	114,100	115,500	117,000	118,500	120,100	121,700	123,300	125,000	126,700	128,400	130,200	132,000	133,900	135,800	23
24	110,700	111,800	113,000	114,200	115,500	116,800	118,100	119,500	120,900	122,400	123,900	125,500	127,100	128,700	130,400	132,100	133,800	135,600	137,400	139,300	141,200	24
25	116,100	117,200	118,400	119,600	120,800	122,100	123,500	124,900	126,300	127,800	129,300	130,900	132,500	134,100	135,800	137,500	139,200	141,000	142,900	144,700	146,600	25
26	119,800	120,900	122,100	123,300	124,600	125,900	127,300	128,700	130,100	131,600	133,200	134,700	136,300	138,000	139,700	141,400	143,200	145,000	146,900	148,700	150,700	26
27	123,400	124,600	125,800	127,000	128,300	129,700	131,000	132,500	133,900	135,400	137,000	138,600	140,200	141,900	143,600	145,400	147,200	149,000	150,800	152,700	154,700	27
28	127,100	128,300	129,500	130,800	132,100	133,400	134,800	136,300	137,800	139,300	140,900	142,500	144,100	145,800	147,500	149,300	151,100	153,000	154,800	156,800	158,700	28

MAY 2008

See special instruction for preventing gate overflow on page 2.

HEADWATER 816 to 820
TAILWATER 780.51 to 781.5

TELLICO DAM
SPILLWAY DISCHARGE
IN CUBIC FEET PER SECOND

GATE ARRANGEMENT	HEADWATER ELEVATION																				GATE ARRANGEMENT
	800.0	800.1	800.2	800.3	800.4	800.5	800.6	800.7	800.8	800.9	801.0	801.1	801.2	801.3	801.4	801.5	801.6	801.7	801.8	801.9	802.0	
1	2,210	2,220	2,220	2,230	2,240	2,240	2,250	2,260	2,260	2,270	2,270	2,280	2,290	2,290	2,300	2,300	2,310	2,310	2,320	2,330	2,330	1
2	4,780	4,800	4,810	4,820	4,830	4,850	4,860	4,870	4,890	4,900	4,910	4,930	4,940	4,950	4,960	4,980	4,990	5,000	5,020	5,030	5,040	2
3	7,440	7,460	7,480	7,500	7,520	7,540	7,560	7,580	7,600	7,620	7,640	7,660	7,680	7,700	7,720	7,740	7,760	7,780	7,800	7,820	7,840	3
4	10,030	10,060	10,090	10,110	10,140	10,170	10,200	10,220	10,250	10,280	10,310	10,330	10,360	10,390	10,410	10,440	10,470	10,500	10,520	10,550	10,580	4
5	13,050	13,080	13,120	13,160	13,190	13,230	13,270	13,300	13,340	13,380	13,410	13,450	13,480	13,520	13,560	13,590	13,630	13,660	13,700	13,740	13,770	5
6	15,940	15,990	16,030	16,070	16,120	16,160	16,200	16,250	16,290	16,330	16,370	16,420	16,460	16,500	16,550	16,590	16,630	16,670	16,720	16,760	16,800	6
7	19,060	19,110	19,160	19,210	19,260	19,310	19,360	19,410	19,460	19,510	19,560	19,610	19,660	19,710	19,760	19,810	19,860	19,910	19,960	20,010	20,060	7
8	22,140	22,200	22,250	22,310	22,370	22,420	22,480	22,540	22,590	22,650	22,710	22,760	22,820	22,880	22,930	22,990	23,040	23,100	23,150	23,210	23,270	8
9	24,990	25,050	25,110	25,170	25,240	25,300	25,360	25,430	25,490	25,550	25,610	25,670	25,740	25,800	25,860	25,920	25,980	26,050	26,110	26,170	26,230	9
10	27,760	27,820	27,890	27,960	28,030	28,100	28,160	28,230	28,300	28,370	28,430	28,500	28,570	28,630	28,700	28,770	28,830	28,900	28,970	29,030	29,100	10
11	30,440	30,510	30,580	30,660	30,730	30,800	30,880	30,950	31,020	31,090	31,170	31,240	31,310	31,380	31,460	31,530	31,600	31,670	31,740	31,810	31,880	11
12	33,150	33,230	33,310	33,390	33,470	33,550	33,630	33,710	33,790	33,870	33,950	34,020	34,100	34,180	34,260	34,340	34,420	34,490	34,570	34,650	34,730	12
13	35,790	35,880	35,970	36,050	36,140	36,230	36,310	36,400	36,480	36,570	36,660	36,740	36,830	36,910	37,000	37,080	37,170	37,250	37,330	37,420	37,500	13
14	38,350	38,450	38,540	38,640	38,730	38,820	38,920	39,010	39,100	39,200	39,290	39,380	39,470	39,560	39,650	39,750	39,840	39,930	40,020	40,110	40,200	14
15	40,860	40,960	41,060	41,160	41,260	41,360	41,460	41,560	41,660	41,760	41,860	41,960	42,060	42,160	42,260	42,350	42,450	42,550	42,650	42,740	42,840	15
16	43,280	43,390	43,490	43,600	43,710	43,820	43,920	44,030	44,140	44,240	44,350	44,450	44,560	44,660	44,770	44,870	44,970	45,080	45,180	45,280	45,380	16
17	47,230	47,340	47,460	47,570	47,690	47,800	47,910	48,020	48,140	48,250	48,360	48,470	48,580	48,690	48,800	48,910	49,020	49,130	49,240	49,350	49,460	17
18	51,170	51,300	51,420	51,540	51,660	51,780	51,900	52,020	52,140	52,260	52,370	52,490	52,610	52,730	52,840	52,960	53,070	53,190	53,300	53,420	53,530	18
19	55,120	55,250	55,380	55,510	55,640	55,760	55,890	56,020	56,140	56,270	56,390	56,510	56,640	56,760	56,880	57,000	57,120	57,240	57,360	57,480	57,600	19
20	56,750	56,950	57,160	57,370	57,580	57,780	57,990	58,200	58,400	58,610	58,810	59,020	59,220	59,430	59,630	59,840	60,040	60,250	60,450	60,660	60,860	20
21	58,370	58,660	58,940	59,230	59,520	59,800	60,090	60,380	60,660	60,950	61,240	61,530	61,810	62,100	62,390	62,680	62,970	63,260	63,540	63,830	64,120	21
22	60,000	60,360	60,730	61,090	61,460	61,820	62,190	62,560	62,920	63,290	63,660	64,030	64,400	64,770	65,140	65,520	65,890	66,260	66,640	67,010	67,390	22
23	60,000	60,360	60,730	61,090	61,460	61,820	62,190	62,560	62,920	63,290	63,660	64,030	64,400	64,770	65,140	65,520	65,890	66,260	66,640	67,010	67,390	23
24	60,000	60,360	60,730	61,090	61,460	61,820	62,190	62,560	62,920	63,290	63,660	64,030	64,400	64,770	65,140	65,520	65,890	66,260	66,640	67,010	67,390	24
25	60,000	60,360	60,730	61,090	61,460	61,820	62,190	62,560	62,920	63,290	63,660	64,030	64,400	64,770	65,140	65,520	65,890	66,260	66,640	67,010	67,390	25
26	60,000	60,360	60,730	61,090	61,460	61,820	62,190	62,560	62,920	63,290	63,660	64,030	64,400	64,770	65,140	65,520	65,890	66,260	66,640	67,010	67,390	26
27	60,000	60,360	60,730	61,090	61,460	61,820	62,190	62,560	62,920	63,290	63,660	64,030	64,400	64,770	65,140	65,520	65,890	66,260	66,640	67,010	67,390	27
28	60,000	60,360	60,730	61,090	61,460	61,820	62,190	62,560	62,920	63,290	63,660	64,030	64,400	64,770	65,140	65,520	65,890	66,260	66,640	67,010	67,390	28

GATE ARRANGEMENT	HEADWATER ELEVATION																				GATE ARRANGEMENT
	802.0	802.1	802.2	802.3	802.4	802.5	802.6	802.7	802.8	802.9	803.0	803.1	803.2	803.3	803.4	803.5	803.6	803.7	803.8	803.9	804.0	
1	2,330	2,340	2,340	2,350	2,360	2,360	2,370	2,370	2,380	2,380	2,390	2,400	2,400	2,410	2,410	2,420	2,420	2,430	2,430	2,440	2,450	1
2	5,040	5,050	5,070	5,080	5,090	5,100	5,120	5,130	5,140	5,150	5,160	5,180	5,190	5,200	5,210	5,230	5,240	5,250	5,260	5,270	5,290	2
3	7,840	7,860	7,880	7,900	7,920	7,940	7,960	7,980	8,000	8,010	8,030	8,050	8,070	8,090	8,110	8,130	8,150	8,170	8,190	8,200	8,220	3
4	10,580	10,600	10,630	10,660	10,680	10,710	10,740	10,760	10,790	10,820	10,840	10,870	10,900	10,920	10,950	10,980	11,000	11,030	11,060	11,080	11,110	4
5	13,770	13,810	13,840	13,880	13,910	13,950	13,980	14,020	14,050	14,090	14,120	14,160	14,190	14,230	14,260	14,300	14,330	14,370	14,400	14,440	14,470	5
6	16,800	16,840	16,890	16,930	16,970	17,010	17,050	17,090	17,140	17,180	17,220	17,260	17,300	17,340	17,380	17,430	17,470	17,510	17,550	17,590	17,630	6
7	20,060	20,100	20,150	20,200	20,250	20,300	20,350	20,400	20,450	20,490	20,540	20,590	20,640	20,680	20,730	20,780	20,830	20,870	20,920	20,970	21,010	7
8	23,270	23,320	23,380	23,430	23,490	23,540	23,600	23,650	23,710	23,760	23,810	23,870	23,920	23,980	24,030	24,080	24,140	24,190	24,240	24,300	24,350	8
9	26,230	26,290	26,350	26,410	26,470	26,530	26,590	26,650	26,710	26,770	26,830	26,890	26,950	27,010	27,070	27,130	27,190	27,250	27,310	27,370	27,420	9
10	29,100	29,170	29,230	29,300	29,360	29,430	29,490	29,560	29,620	29,690	29,750	29,820	29,880	29,950	30,010	30,080	30,140	30,200	30,270	30,330	30,390	10
11	31,880	31,950	32,020	32,090	32,160	32,240	32,310	32,370	32,440	32,510	32,580	32,650	32,720	32,790	32,860	32,930	33,000	33,070	33,130	33,200	33,270	11
12	34,730	34,800	34,880	34,960	35,040	35,110	35,190	35,270	35,340	35,420	35,490	35,570	35,640	35,720	35,800	35,870	35,950	36,020	36,090	36,170	36,240	12
13	37,500	37,580	37,670	37,750	37,830	37,920	38,000	38,080	38,160	38,250	38,330	38,410	38,490	38,570	38,650	38,730	38,810	38,890	38,980	39,060	39,140	13
14	40,200	40,290	40,380	40,470	40,560	40,650	40,740	40,820	40,910	41,000	41,090	41,180	41,260	41,350	41,440	41,530	41,610	41,700	41,790	41,870	41,960	14
15	42,840	42,940	43,030	43,130	43,220	43,320	43,410	43,510	43,600	43,700	43,790	43,890	43,980	44,070	44,170	44,260	44,350	44,440	44,540	44,630	44,720	15
16	45,380	45,490	45,590	45,690	45,790	45,890	45,990	46,090	46,190	46,290	46,390	46,490	46,590	46,690	46,790	46,880	46,980	47,080	47,180	47,270	47,370	16
17	49,460	49,570	49,670	49,780	49,890	49,990	50,100	50,210	50,320	50,420	50,530	50,630	50,740	50,850	50,950	51,060	51,160	51,270	51,380	51,480	51,590	17
18	53,530	53,640	53,760	53,870	53,990	54,100	54,210	54,320	54,440	54,550	54,660	54,780	54,890	55,000	55,120	55,230	55,350	55,460	55,570	55,690	55,800	18
19	57,600	57,720	57,840	57,960	58,080	58,200	58,320	58,440	58,560	58,680	58,800	58,920	59,040	59,160	59,280	59,410	59,530	59,650	59,770	59,900	60,020	19
20	60,860	61,070	61,270	61,480	61,690	61,890	62,100	62,300	62,510	62,720	62,920	63,130	63,340	63,550	63,750	63,960	64,170	64,380	64,590	64,800	64,990	20
21	64,120	64,420	64,710	65,000	65,290	65,580	65,870	66,160	66,460	66,750	67,050	67,340	67,630	67,930	68,230	68,520	68,820	69,120	69,410	69,710	69,960	21
22	67,390	67,760	68,140	68,510	68,890	69,270	69,650	70,030	70,410	70,790	71,170	71,550	71,930	72,310	72,700	73,080	73,460	73,850	74,230	74,620	74,930	22
23	67,390	67,760	68,140	68,510	68,890	69,270	69,650	70,030	70,410	70,790	71,170	71,550	71,930	72,310	72,700	73,080	73,460	73,850	74,230	74,620	74,960	23
24	67,390	67,760	68,140	68,510	68,890	69,270	69,650	70,030	70,410	70,790	71,170	71,550	71,930	72,310	72,700	73,080	73,460	73,850	74,230	74,620	74,980	24
25	67,390	67,760	68,140	68,510	68,890	69,270	69,650	70,030	70,410	70,790	71,170	71,550	71,930	72,310	72,700	73,080	73,460	73,850	74,230	74,620	75,010	25
26	67,390	67,760	68,140	68,510	68,890	69,270	69,650	70,030	70,410	70,790	71,170	71,550	71,930	72,310	72,700	73,080	73,460	73,850	74,230	74,620	75,010	26
27	67,390	67,760	68,140	68,510	68,890	69,270	69,650	70,030	70,410	70,790	71,170	71,550	71,930	72,310	72,700	73,080	73,460	73,850	74,230	74,620	75,010	27
28	67,390	67,760	68,140	68,510	68,890	69,270	69,650	70,030	70,410	70,790	71,170	71,550	71,930	72,310	72,700	73,080	73,460	73,850	74,230	74,620	75,010	28

HEADWATER 800 to 804
TAILWATER 781.51 to 782.5

MAY 2008

TELLICO DAM
SPILLWAY DISCHARGE
IN CUBIC FEET PER SECOND

HEADWATER ELEVATION

GATE ARRANGEMENT	804.0	804.1	804.2	804.3	804.4	804.5	804.6	804.7	804.8	804.9	805.0	805.1	805.2	805.3	805.4	805.5	805.6	805.7	805.8	805.9	806.0	GATE ARRANGEMENT
1	2,450	2,450	2,460	2,460	2,470	2,470	2,480	2,480	2,490	2,500	2,500	2,510	2,510	2,520	2,520	2,530	2,530	2,540	2,540	2,550	2,550	1
2	5,290	5,300	5,310	5,320	5,330	5,350	5,360	5,370	5,380	5,390	5,410	5,420	5,430	5,440	5,450	5,460	5,480	5,490	5,500	5,510	5,520	2
3	8,220	8,240	8,260	8,280	8,300	8,320	8,330	8,350	8,370	8,390	8,410	8,430	8,440	8,460	8,480	8,500	8,520	8,530	8,550	8,570	8,590	3
4	11,110	11,130	11,160	11,190	11,210	11,240	11,260	11,290	11,320	11,340	11,370	11,390	11,420	11,450	11,470	11,500	11,520	11,550	11,570	11,600	11,620	4
5	14,470	14,500	14,540	14,570	14,600	14,640	14,670	14,700	14,740	14,770	14,800	14,830	14,870	14,900	14,930	14,960	15,000	15,030	15,060	15,090	15,120	5
6	17,630	17,670	17,710	17,750	17,790	17,830	17,870	17,910	17,940	17,980	18,020	18,060	18,100	18,140	18,180	18,210	18,250	18,290	18,330	18,370	18,400	6
7	21,010	21,060	21,110	21,150	21,200	21,250	21,290	21,340	21,380	21,430	21,470	21,520	21,560	21,610	21,650	21,700	21,740	21,790	21,830	21,870	21,920	7
8	24,350	24,400	24,450	24,510	24,560	24,610	24,660	24,710	24,770	24,820	24,870	24,920	24,970	25,020	25,070	25,120	25,170	25,220	25,270	25,320	25,370	8
9	27,420	27,480	27,540	27,600	27,650	27,710	27,770	27,830	27,880	27,940	28,000	28,050	28,110	28,160	28,220	28,280	28,330	28,390	28,440	28,500	28,550	9
10	30,390	30,460	30,520	30,580	30,640	30,710	30,770	30,830	30,890	30,950	31,020	31,080	31,140	31,200	31,260	31,320	31,380	31,440	31,500	31,570	31,630	10
11	33,270	33,340	33,400	33,470	33,540	33,610	33,670	33,740	33,810	33,870	33,940	34,010	34,070	34,140	34,200	34,270	34,330	34,400	34,460	34,530	34,590	11
12	36,240	36,320	36,390	36,460	36,540	36,610	36,690	36,760	36,830	36,900	36,980	37,050	37,120	37,190	37,270	37,340	37,410	37,480	37,550	37,620	37,700	12
13	39,140	39,220	39,300	39,380	39,460	39,540	39,620	39,700	39,780	39,850	39,930	40,010	40,090	40,170	40,250	40,330	40,410	40,480	40,560	40,640	40,720	13
14	41,960	42,050	42,140	42,220	42,310	42,400	42,480	42,570	42,660	42,740	42,830	42,920	43,000	43,090	43,170	43,260	43,350	43,430	43,520	43,600	43,690	14
15	44,720	44,820	44,910	45,010	45,100	45,200	45,290	45,390	45,480	45,580	45,670	45,760	45,860	45,950	46,040	46,140	46,230	46,320	46,420	46,510	46,600	15
16	47,370	47,480	47,580	47,680	47,780	47,890	47,990	48,090	48,190	48,290	48,400	48,500	48,600	48,700	48,800	48,900	49,000	49,100	49,200	49,300	49,400	16
17	51,590	51,700	51,810	51,920	52,030	52,140	52,250	52,360	52,470	52,580	52,690	52,800	52,920	53,030	53,140	53,250	53,360	53,470	53,580	53,690	53,800	17
18	55,800	55,920	56,040	56,160	56,280	56,390	56,510	56,630	56,750	56,870	56,990	57,110	57,230	57,350	57,470	57,600	57,720	57,840	57,960	58,080	58,200	18
19	60,020	60,140	60,270	60,400	60,520	60,650	60,780	60,900	61,030	61,160	61,290	61,420	61,550	61,680	61,810	61,940	62,070	62,210	62,340	62,470	62,600	19
20	64,990	65,150	65,300	65,460	65,620	65,780	65,930	66,090	66,250	66,410	66,560	66,720	66,880	67,040	67,200	67,350	67,510	67,670	67,830	67,980	68,140	20
21	69,960	70,150	70,340	70,530	70,720	70,900	71,090	71,280	71,470	71,650	71,840	72,020	72,210	72,390	72,580	72,760	72,950	73,130	73,320	73,500	73,680	21
22	74,930	75,150	75,370	75,590	75,810	76,030	76,250	76,470	76,680	76,900	77,110	77,330	77,540	77,750	77,960	78,180	78,390	78,600	78,800	79,010	79,220	22
23	74,960	75,230	75,510	75,790	76,060	76,340	76,610	76,890	77,160	77,430	77,710	77,980	78,250	78,530	78,800	79,070	79,340	79,620	79,890	80,160	80,430	23
24	74,980	75,310	75,640	75,980	76,310	76,640	76,970	77,310	77,640	77,970	78,300	78,640	78,970	79,300	79,630	79,970	80,300	80,630	80,970	81,300	81,640	24
25	75,010	75,390	75,780	76,170	76,560	76,950	77,330	77,720	78,120	78,510	78,900	79,290	79,680	80,080	80,470	80,860	81,260	81,650	82,050	82,450	82,840	25
26	75,010	75,390	75,780	76,170	76,560	76,950	77,330	77,720	78,120	78,510	78,900	79,290	79,680	80,080	80,470	80,860	81,260	81,650	82,050	82,450	82,840	26
27	75,010	75,390	75,780	76,170	76,560	76,950	77,330	77,720	78,120	78,510	78,900	79,290	79,680	80,080	80,470	80,860	81,260	81,650	82,050	82,450	82,840	27
28	75,010	75,390	75,780	76,170	76,560	76,950	77,330	77,720	78,120	78,510	78,900	79,290	79,680	80,080	80,470	80,860	81,260	81,650	82,050	82,450	82,840	28

HEADWATER ELEVATION

GATE ARRANGEMENT	806.0	806.1	806.2	806.3	806.4	806.5	806.6	806.7	806.8	806.9	807.0	807.1	807.2	807.3	807.4	807.5	807.6	807.7	807.8	807.9	808.0	GATE ARRANGEMENT
1	2,550	2,560	2,570	2,570	2,580	2,580	2,590	2,590	2,600	2,600	2,610	2,610	2,620	2,620	2,630	2,630	2,640	2,640	2,650	2,650	2,660	1
2	5,520	5,530	5,540	5,560	5,570	5,580	5,590	5,600	5,610	5,620	5,640	5,650	5,660	5,670	5,680	5,690	5,700	5,710	5,720	5,740	5,750	2
3	8,590	8,610	8,620	8,640	8,660	8,680	8,690	8,710	8,730	8,750	8,770	8,780	8,800	8,820	8,840	8,850	8,870	8,890	8,900	8,920	8,940	3
4	11,620	11,650	11,680	11,700	11,730	11,750	11,780	11,800	11,830	11,850	11,880	11,900	11,930	11,950	11,980	12,000	12,030	12,050	12,080	12,100	12,130	4
5	15,120	15,160	15,190	15,220	15,250	15,280	15,310	15,350	15,380	15,410	15,440	15,470	15,500	15,530	15,560	15,590	15,620	15,650	15,680	15,720	15,750	5
6	18,400	18,440	18,480	18,520	18,550	18,590	18,630	18,670	18,700	18,740	18,780	18,810	18,850	18,890	18,920	18,960	18,990	19,030	19,070	19,100	19,140	6
7	21,920	21,960	22,000	22,050	22,090	22,130	22,180	22,220	22,260	22,310	22,350	22,390	22,430	22,480	22,520	22,560	22,600	22,650	22,690	22,730	22,770	7
8	25,370	25,420	25,470	25,520	25,570	25,620	25,670	25,720	25,770	25,810	25,860	25,910	25,960	26,010	26,060	26,100	26,150	26,200	26,250	26,300	26,340	8
9	28,550	28,610	28,660	28,720	28,770	28,830	28,880	28,940	28,990	29,040	29,100	29,150	29,210	29,260	29,310	29,370	29,420	29,470	29,530	29,580	29,630	9
10	31,630	31,690	31,750	31,810	31,870	31,930	31,990	32,040	32,100	32,160	32,220	32,280	32,340	32,400	32,460	32,520	32,580	32,630	32,690	32,750	32,810	10
11	34,590	34,660	34,720	34,790	34,850	34,920	34,980	35,050	35,110	35,180	35,240	35,300	35,370	35,430	35,490	35,560	35,620	35,680	35,750	35,810	35,870	11
12	37,700	37,770	37,840	37,910	37,980	38,050	38,120	38,190	38,260	38,330	38,400	38,480	38,550	38,620	38,690	38,760	38,830	38,900	38,960	39,030	39,100	12
13	40,720	40,800	40,870	40,950	41,030	41,110	41,180	41,260	41,340	41,420	41,490	41,570	41,650	41,720	41,800	41,880	41,950	42,030	42,110	42,180	42,260	13
14	43,690	43,770	43,860	43,940	44,030	44,110	44,200	44,280	44,360	44,450	44,530	44,620	44,700	44,790	44,870	44,950	45,040	45,120	45,200	45,290	45,370	14
15	46,600	46,690	46,780	46,880	46,970	47,060	47,150	47,240	47,330	47,420	47,510	47,600	47,690	47,780	47,870	47,960	48,050	48,140	48,230	48,320	48,410	15
16	49,400	49,500	49,600	49,700	49,800	49,890	49,990	50,090	50,190	50,290	50,380	50,480	50,580	50,670	50,770	50,870	50,960	51,060	51,160	51,250	51,350	16
17	53,800	53,910	54,020	54,130	54,240	54,350	54,460	54,570	54,680	54,790	54,900	55,010	55,120	55,230	55,340	55,440	55,550	55,660	55,770	55,880	55,980	17
18	58,200	58,320	58,440	58,570	58,690	58,810	58,930	59,050	59,170	59,300	59,420	59,540	59,660	59,780	59,900	60,020	60,140	60,260	60,380	60,500	60,620	18
19	62,600	62,740	62,870	63,000	63,130	63,270	63,400	63,530	63,670	63,800	63,930	64,070	64,200	64,330	64,470	64,600	64,730	64,860	64,990	65,130	65,260	19
20	68,140	68,260	68,390	68,510	68,630	68,750	68,870	68,990	69,110	69,230	69,340	69,460	69,580	69,690	69,810	69,930	70,040	70,150	70,270	70,380	70,490	20
21	73,680	73,790	73,900	74,010	74,120	74,230	74,340	74,440	74,550	74,650	74,760	74,860	74,960	75,060	75,160	75,250	75,350	75,450	75,540	75,640	75,730	21
22	79,220	79,320	79,420	79,520	79,610	79,710	79,800	79,900	79,990	80,080	80,170	80,250	80,340	80,420	80,500	80,580	80,660	80,740	80,820	80,890	80,970	22
23	80,430	80,630	80,830	81,020	81,220	81,420	81,610	81,810	82,000	82,200	82,390	82,580	82,770	82,960	83,150	83,340	83,530	83,710	83,900	84,090	84,270	23
24	81,640	81,930	82,230	82,530	82,830	83,130	83,420	83,720	84,020	84,320	84,610	84,910	85,210	85,500	85,800	86,100	86,390	86,690	86,990	87,280	87,580	24
25	82,840	83,240	83,640	84,040	84,430	84,830	85,230	85,630	86,030	86,440	86,840	87,240	87,640	88,050	88,450	88,850	89,260	89,660	90,070	90,480	90,880	25
26	82,840	83,240	83,640	84,040	84,430	84,830	85,230	85,630	86,030	86,440	86,840	87,240	87,640	88,050	88,450	88,850	89,260	89,660	90,070	90,480	90,880	26
27	82,840	83,240	83,640	84,040	84,430	84,830	85,230	85,630	86,030	86,440	86,840	87,240	87,640	88,050	88,450	88,850	89,260	89,660	90,070	90,480	90,880	27
28	82,840	83,240	83,640	84,040	84,430	84,830	85,230	85,630	86,030	86,440	86,840	87,240	87,640	88,050	88,450	88,850	89,260	89,660	90,070	90,480	90,880	28

MAY 2008

HEADWATER 804 to 808
TAILWATER 781.51 to 782.5

TELLICO DAM
SPILLWAY DISCHARGE
IN CUBIC FEET PER SECOND

GATE ARRANGEMENT	HEADWATER ELEVATION																				GATE ARRANGEMENT
	808.0	808.1	808.2	808.3	808.4	808.5	808.6	808.7	808.8	808.9	809.0	809.1	809.2	809.3	809.4	809.5	809.6	809.7	809.8	809.9	810.0	
1	2,660	2,660	2,670	2,670	2,680	2,680	2,690	2,690	2,700	2,700	2,710	2,710	2,720	2,720	2,730	2,730	2,740	2,740	2,750	2,750	2,760	1
2	5,750	5,760	5,770	5,780	5,790	5,800	5,810	5,820	5,830	5,850	5,860	5,870	5,880	5,890	5,900	5,910	5,920	5,930	5,940	5,950	5,960	2
3	8,940	8,960	8,970	8,990	9,010	9,020	9,040	9,060	9,080	9,090	9,110	9,130	9,140	9,160	9,180	9,190	9,210	9,230	9,240	9,260	9,280	3
4	12,130	12,150	12,180	12,200	12,230	12,250	12,280	12,300	12,320	12,350	12,370	12,400	12,420	12,450	12,470	12,490	12,520	12,540	12,570	12,590	12,620	4
5	15,750	15,780	15,810	15,840	15,870	15,900	15,930	15,960	15,990	16,020	16,050	16,080	16,110	16,140	16,170	16,200	16,230	16,260	16,290	16,320	16,350	5
6	19,140	19,170	19,210	19,250	19,280	19,320	19,350	19,390	19,420	19,460	19,490	19,530	19,560	19,600	19,630	19,670	19,700	19,740	19,770	19,810	19,840	6
7	22,770	22,810	22,850	22,900	22,940	22,980	23,020	23,060	23,100	23,140	23,180	23,220	23,270	23,310	23,350	23,390	23,430	23,470	23,510	23,550	23,590	7
8	26,340	26,390	26,440	26,480	26,530	26,580	26,630	26,670	26,720	26,770	26,810	26,860	26,910	26,950	27,000	27,040	27,090	27,140	27,180	27,230	27,270	8
9	29,630	29,690	29,740	29,790	29,840	29,900	29,950	30,000	30,050	30,100	30,160	30,210	30,260	30,310	30,360	30,420	30,470	30,520	30,570	30,620	30,670	9
10	32,810	32,870	32,930	32,980	33,040	33,100	33,160	33,210	33,270	33,330	33,390	33,440	33,500	33,560	33,610	33,670	33,730	33,780	33,840	33,900	33,950	10
11	35,870	35,940	36,000	36,060	36,120	36,190	36,250	36,310	36,370	36,440	36,500	36,560	36,620	36,680	36,740	36,810	36,870	36,930	36,990	37,050	37,110	11
12	39,100	39,170	39,240	39,310	39,380	39,450	39,520	39,590	39,660	39,730	39,800	39,860	39,930	40,000	40,070	40,140	40,210	40,270	40,340	40,410	40,480	12
13	42,260	42,340	42,410	42,490	42,570	42,640	42,720	42,800	42,870	42,950	43,020	43,100	43,180	43,250	43,330	43,400	43,480	43,560	43,630	43,710	43,780	13
14	45,370	45,450	45,540	45,620	45,700	45,790	45,870	45,950	46,030	46,120	46,200	46,280	46,360	46,440	46,530	46,610	46,690	46,770	46,850	46,940	47,020	14
15	48,410	48,500	48,590	48,680	48,770	48,860	48,950	49,040	49,130	49,220	49,310	49,400	49,490	49,580	49,670	49,760	49,850	49,940	50,030	50,120	50,210	15
16	51,350	51,450	51,550	51,650	51,750	51,840	51,940	52,040	52,140	52,240	52,340	52,440	52,530	52,630	52,730	52,830	52,920	53,020	53,120	53,210	53,310	16
17	55,980	56,090	56,200	56,310	56,420	56,530	56,640	56,750	56,860	56,970	57,070	57,180	57,290	57,400	57,510	57,620	57,720	57,830	57,930	58,040	58,150	17
18	60,620	60,740	60,860	60,980	61,100	61,220	61,340	61,460	61,580	61,690	61,810	61,930	62,050	62,170	62,280	62,400	62,520	62,630	62,750	62,870	62,980	18
19	65,260	65,390	65,520	65,650	65,780	65,910	66,040	66,170	66,290	66,420	66,550	66,680	66,810	66,930	67,060	67,190	67,310	67,440	67,570	67,690	67,820	19
20	70,490	70,620	70,740	70,860	70,970	71,090	71,210	71,330	71,450	71,560	71,680	71,790	71,910	72,020	72,140	72,250	72,360	72,470	72,580	72,700	72,810	20
21	75,730	75,840	75,950	76,060	76,170	76,280	76,390	76,490	76,600	76,710	76,810	76,910	77,010	77,110	77,210	77,310	77,410	77,510	77,600	77,700	77,790	21
22	80,970	81,070	81,170	81,270	81,370	81,470	81,560	81,660	81,750	81,850	81,940	82,030	82,120	82,200	82,290	82,370	82,460	82,540	82,620	82,700	82,780	22
23	84,270	84,480	84,680	84,880	85,080	85,280	85,490	85,690	85,890	86,090	86,280	86,480	86,680	86,870	87,070	87,260	87,450	87,650	87,840	88,030	88,220	23
24	87,580	87,880	88,190	88,490	88,800	89,100	89,410	89,710	90,020	90,320	90,630	90,930	91,240	91,540	91,840	92,150	92,450	92,760	93,060	93,360	93,670	24
25	90,880	91,290	91,700	92,100	92,510	92,920	93,330	93,740	94,150	94,560	94,970	95,390	95,800	96,210	96,620	97,040	97,450	97,870	98,280	98,700	99,110	25
26	90,880	91,290	91,700	92,100	92,510	92,920	93,330	93,740	94,150	94,560	94,970	95,390	95,800	96,210	96,620	97,040	97,450	97,870	98,280	98,700	99,110	26
27	90,880	91,290	91,700	92,100	92,510	92,920	93,330	93,740	94,150	94,560	94,970	95,390	95,800	96,210	96,620	97,040	97,450	97,870	98,280	98,700	99,110	27
28	90,880	91,290	91,700	92,100	92,510	92,920	93,330	93,740	94,150	94,560	94,970	95,390	95,800	96,210	96,620	97,040	97,450	97,870	98,280	98,700	99,110	28

GATE ARRANGEMENT	HEADWATER ELEVATION																				GATE ARRANGEMENT
	810.0	810.1	810.2	810.3	810.4	810.5	810.6	810.7	810.8	810.9	811.0	811.1	811.2	811.3	811.4	811.5	811.6	811.7	811.8	811.9	812.0	
1	2,760	2,760	2,770	2,770	2,780	2,780	2,790	2,790	2,800	2,800	2,810	2,810	2,820	2,820	2,830	2,830	2,840	2,840	2,850	2,850	2,860	1
2	5,960	5,970	5,990	6,000	6,010	6,020	6,030	6,040	6,050	6,060	6,070	6,080	6,090	6,100	6,110	6,120	6,130	6,140	6,150	6,160	6,170	2
3	9,280	9,290	9,310	9,330	9,340	9,360	9,380	9,390	9,410	9,420	9,440	9,460	9,470	9,490	9,510	9,520	9,540	9,550	9,570	9,590	9,600	3
4	12,620	12,640	12,660	12,690	12,710	12,730	12,760	12,780	12,810	12,830	12,850	12,880	12,900	12,920	12,950	12,970	12,990	13,020	13,040	13,060	13,090	4
5	16,350	16,380	16,410	16,440	16,460	16,490	16,520	16,550	16,580	16,610	16,640	16,670	16,700	16,730	16,760	16,790	16,820	16,840	16,870	16,900	16,930	5
6	19,840	19,870	19,910	19,940	19,980	20,010	20,050	20,080	20,110	20,150	20,180	20,220	20,250	20,280	20,320	20,350	20,380	20,420	20,450	20,480	20,520	6
7	23,590	23,630	23,670	23,710	23,750	23,790	23,830	23,870	23,910	23,950	23,990	24,030	24,070	24,110	24,150	24,190	24,230	24,270	24,310	24,340	24,380	7
8	27,270	27,320	27,360	27,410	27,450	27,500	27,540	27,590	27,630	27,680	27,720	27,770	27,810	27,860	27,900	27,950	27,990	28,040	28,080	28,120	28,170	8
9	30,670	30,720	30,770	30,830	30,880	30,930	30,980	31,030	31,080	31,130	31,180	31,230	31,280	31,330	31,380	31,430	31,480	31,530	31,580	31,620	31,670	9
10	33,950	34,010	34,070	34,120	34,180	34,240	34,290	34,350	34,400	34,460	34,510	34,570	34,620	34,680	34,730	34,790	34,840	34,900	34,950	35,010	35,060	10
11	37,110	37,170	37,230	37,290	37,350	37,420	37,480	37,540	37,600	37,660	37,720	37,780	37,840	37,900	37,960	38,020	38,070	38,130	38,190	38,250	38,310	11
12	40,480	40,550	40,610	40,680	40,750	40,820	40,880	40,950	41,020	41,080	41,150	41,220	41,280	41,350	41,420	41,480	41,550	41,610	41,680	41,750	41,810	12
13	43,780	43,860	43,930	44,010	44,080	44,160	44,230	44,310	44,380	44,450	44,530	44,600	44,680	44,750	44,820	44,900	44,970	45,040	45,110	45,190	45,260	13
14	47,020	47,100	47,180	47,260	47,340	47,420	47,500	47,580	47,660	47,740	47,820	47,900	47,980	48,060	48,140	48,220	48,300	48,380	48,450	48,530	48,610	14
15	50,210	50,290	50,380	50,470	50,560	50,650	50,730	50,820	50,910	51,000	51,080	51,170	51,260	51,340	51,430	51,520	51,600	51,690	51,780	51,860	51,950	15
16	53,310	53,410	53,500	53,600	53,700	53,790	53,890	53,980	54,080	54,180	54,270	54,370	54,460	54,560	54,650	54,750	54,840	54,930	55,030	55,120	55,220	16
17	58,150	58,250	58,360	58,470	58,570	58,680	58,780	58,890	58,990	59,100	59,210	59,310	59,420	59,520	59,630	59,730	59,840	59,940	60,050	60,150	60,260	17
18	62,980	63,100	63,220	63,330	63,450	63,560	63,680	63,790	63,910	64,030	64,140	64,260	64,370	64,490	64,600	64,720	64,830	64,950	65,060	65,180	65,300	18
19	67,820	67,940	68,070	68,200	68,320	68,450	68,570	68,700	68,820	68,950	69,080	69,200	69,330	69,450	69,580	69,700	69,830	69,960	70,080	70,210	70,330	19
20	72,810	72,920	73,030	73,150	73,260	73,370	73,480	73,590	73,700	73,820	73,930	74,050	74,170	74,290	74,410	74,530	74,650	74,770	74,890	75,010	75,130	20
21	77,790	77,890	77,990	78,090	78,190	78,290	78,390	78,490	78,580	78,680	78,780	78,890	79,010	79,120	79,240	79,350	79,470	79,580	79,690	79,800	79,920	21
22	82,780	82,870	82,960	83,040	83,130	83,210	83,300	83,380	83,460	83,550	83,630	83,740	83,850	83,960	84,070	84,180	84,280	84,390	84,500	84,600	84,710	22
23	88,220	88,420	88,620	88,820	89,010	89,200	89,340	89,470	89,610	89,750	89,880	90,040	90,190	90,340	90,500	90,650	90,800	90,950	91,100	91,250	91,400	23
24	93,670	93,980	94,280	94,590	94,900	95,190	95,380	95,570	95,760	95,950	96,140	96,330	96,530	96,730	96,920	97,120	97,310	97,510	97,700	97,900	98,090	24
25	99,110	99,530	99,950	100,400	100,800	101,200	101,400	101,700	101,900	102,100	102,400	102,600	102,900	103,100	103,400	103,600	103,800	104,100	104,300	104,500	104,800	25
26	99,110	99,530	99,950	100,400	100,800	101,200	101,500	101,800	102,100	102,400	102,700	103,000	103,300	103,600	103,900	104,200	104,500	104,800	105,100	105,400	105,700	26
27	99,110	99,530	99,950	100,400	100,800	101,200	101,600	101,900	102,300	102,600	103,000	103,400	103,700	104,100	104,400	104,800	105,200	105,500	105,900	106,200	106,600	27
28	99,110	99,530	99,950	100,400	100,800	101,200	101,600	102,000	102,500	102,900	103,300	103,700	104,100	104,600	105,000	105,400	105,800	106,300	106,700	107,100	107,500	28

HEADWATER 808 to 812
TAILWATER 781.51 to 782.5

MAY 2008

TELLICO DAM

SPILLWAY DISCHARGE

IN CUBIC FEET PER SECOND

HEADWATER ELEVATION

GATE ARRANGEMENT	812.0	812.1	812.2	812.3	812.4	812.5	812.6	812.7	812.8	812.9	813.0	813.1	813.2	813.3	813.4	813.5	813.6	813.7	813.8	813.9	814.0	GATE ARRANGEMENT
1	2,860	2,860	2,870	2,870	2,880	2,880	2,880	2,890	2,890	2,900	2,900	2,910	2,910	2,920	2,920	2,930	2,930	2,940	2,940	2,950	2,950	1
2	6,170	6,180	6,190	6,200	6,210	6,220	6,230	6,240	6,260	6,270	6,280	6,290	6,300	6,310	6,320	6,330	6,340	6,350	6,360	6,370	6,380	2
3	9,600	9,620	9,630	9,650	9,670	9,680	9,700	9,710	9,730	9,740	9,760	9,780	9,790	9,810	9,820	9,840	9,850	9,870	9,890	9,900	9,920	3
4	13,090	13,110	13,130	13,160	13,180	13,200	13,230	13,250	13,270	13,300	13,320	13,340	13,360	13,390	13,410	13,430	13,450	13,480	13,500	13,520	13,540	4
5	16,930	16,960	16,990	17,020	17,050	17,080	17,100	17,130	17,160	17,190	17,220	17,250	17,280	17,300	17,330	17,360	17,390	17,420	17,450	17,470	17,500	5
6	20,520	20,550	20,580	20,620	20,650	20,680	20,720	20,750	20,780	20,810	20,850	20,880	20,910	20,950	20,980	21,010	21,040	21,080	21,110	21,140	21,170	6
7	24,380	24,420	24,460	24,500	24,540	24,580	24,620	24,660	24,700	24,730	24,770	24,810	24,850	24,890	24,930	24,970	25,000	25,040	25,080	25,120	25,160	7
8	28,170	28,210	28,250	28,300	28,340	28,390	28,430	28,470	28,520	28,560	28,600	28,640	28,690	28,730	28,770	28,820	28,860	28,900	28,940	28,980	29,030	8
9	31,670	31,720	31,770	31,820	31,870	31,920	31,960	32,010	32,060	32,110	32,160	32,200	32,250	32,300	32,350	32,390	32,440	32,490	32,530	32,580	32,630	9
10	35,060	35,120	35,170	35,220	35,280	35,330	35,380	35,440	35,490	35,540	35,590	35,650	35,700	35,750	35,800	35,860	35,910	35,960	36,010	36,060	36,120	10
11	38,310	38,370	38,430	38,490	38,550	38,600	38,660	38,720	38,780	38,840	38,890	38,950	39,010	39,070	39,120	39,180	39,240	39,290	39,350	39,410	39,460	11
12	41,810	41,880	41,940	42,000	42,070	42,130	42,200	42,260	42,330	42,390	42,450	42,520	42,580	42,640	42,710	42,770	42,830	42,890	42,960	43,020	43,080	12
13	45,260	45,330	45,400	45,470	45,540	45,610	45,680	45,750	45,820	45,890	45,960	46,030	46,100	46,170	46,240	46,310	46,370	46,440	46,510	46,580	46,650	13
14	48,610	48,690	48,760	48,840	48,920	49,000	49,070	49,150	49,220	49,300	49,380	49,450	49,530	49,600	49,680	49,750	49,830	49,900	49,970	50,050	50,120	14
15	51,950	52,030	52,110	52,190	52,280	52,360	52,440	52,520	52,600	52,680	52,760	52,840	52,920	53,000	53,080	53,160	53,240	53,320	53,400	53,480	53,560	15
16	55,220	55,300	55,390	55,480	55,570	55,650	55,740	55,820	55,910	56,000	56,080	56,170	56,250	56,340	56,430	56,510	56,600	56,680	56,770	56,850	56,940	16
17	60,260	60,360	60,460	60,560	60,660	60,760	60,860	60,960	61,060	61,160	61,260	61,360	61,450	61,550	61,650	61,750	61,850	61,950	62,040	62,140	62,240	17
18	65,300	65,410	65,520	65,640	65,750	65,860	65,980	66,090	66,200	66,320	66,430	66,540	66,650	66,770	66,880	66,990	67,100	67,210	67,320	67,430	67,540	18
19	70,330	70,460	70,590	70,710	70,840	70,970	71,100	71,220	71,350	71,480	71,600	71,730	71,850	71,980	72,100	72,230	72,350	72,480	72,600	72,730	72,850	19
20	75,130	75,260	75,400	75,530	75,670	75,800	75,940	76,070	76,210	76,340	76,480	76,610	76,750	76,890	77,020	77,160	77,290	77,430	77,560	77,700	77,830	20
21	79,920	80,060	80,210	80,350	80,490	80,640	80,780	80,920	81,060	81,210	81,350	81,500	81,640	81,790	81,940	82,090	82,230	82,380	82,520	82,670	82,810	21
22	84,710	84,860	85,010	85,170	85,320	85,470	85,620	85,770	85,920	86,070	86,220	86,380	86,540	86,700	86,860	87,010	87,170	87,330	87,480	87,640	87,800	22
23	91,400	91,520	91,650	91,770	91,900	92,020	92,140	92,260	92,380	92,500	92,620	92,750	92,870	92,990	93,120	93,240	93,360	93,480	93,600	93,720	93,840	23
24	98,090	98,190	98,280	98,380	98,470	98,570	98,660	98,750	98,840	98,930	99,020	99,110	99,200	99,290	99,370	99,460	99,550	99,630	99,720	99,800	99,880	24
25	104,800	104,800	104,900	105,000	105,000	105,100	105,200	105,200	105,300	105,400	105,400	105,500	105,500	105,600	105,600	105,700	105,700	105,800	105,800	105,900	105,900	25
26	105,700	105,900	106,100	106,300	106,400	106,600	106,800	107,000	107,200	107,400	107,500	107,700	107,900	108,100	108,300	108,400	108,600	108,800	109,000	109,100	109,300	26
27	106,600	106,900	107,200	107,500	107,800	108,100	108,400	108,800	109,100	109,400	109,700	110,000	110,300	110,600	110,900	111,200	111,500	111,800	112,100	112,400	112,700	27
28	107,500	108,000	108,400	108,800	109,200	109,700	110,100	110,500	110,900	111,400	111,800	112,200	112,700	113,100	113,500	114,000	114,400	114,800	115,300	115,700	116,100	28

HEADWATER ELEVATION

GATE ARRANGEMENT	814.0	814.1	814.2	814.3	814.4	814.5	814.6	814.7	814.8	814.9	815.0	815.1	815.2	815.3	815.4	815.5	815.6	815.7	815.8	815.9	816.0	GATE ARRANGEMENT
1	2,950	2,950	2,960	2,960	2,970	2,970	2,980	2,980	2,990	2,990	3,000	3,000	3,000	3,010	3,010	3,020						1
2	6,380	6,390	6,400	6,410	6,420	6,430	6,440	6,450	6,460	6,460	6,470	6,480	6,490	6,500	6,510	6,520	6,530	6,540	6,550	6,560	6,570	2
3	9,920	9,930	9,950	9,960	9,980	9,990	10,010	10,020	10,040	10,060	10,070	10,090	10,100	10,120	10,130	10,150	10,160	10,180	10,190	10,210	10,220	3
4	13,540	13,570	13,590	13,610	13,630	13,660	13,680	13,700	13,720	13,740	13,770	13,790	13,810	13,830	13,850	13,880	13,900	13,920	13,940	13,960	13,980	4
5	17,500	17,530	17,560	17,590	17,610	17,640	17,670	17,700	17,730	17,750	17,780	17,810	17,840	17,860	17,890	17,920	17,950	17,970	18,000	18,030	18,050	5
6	21,170	21,210	21,240	21,270	21,300	21,340	21,370	21,400	21,430	21,470	21,500	21,530	21,560	21,600	21,630	21,660	21,690	21,730	21,760	21,790	21,820	6
7	25,160	25,200	25,230	25,270	25,310	25,350	25,380	25,420	25,460	25,500	25,530	25,570	25,610	25,650	25,680	25,720	25,760	25,790	25,830	25,870	25,900	7
8	29,030	29,070	29,110	29,150	29,190	29,240	29,280	29,320	29,360	29,400	29,440	29,480	29,520	29,560	29,600	29,640	29,680	29,720	29,760	29,800	29,840	8
9	32,630	32,670	32,720	32,770	32,810	32,860	32,910	32,950	33,000	33,050	33,090	33,140	33,180	33,230	33,280	33,320	33,370	33,410	33,460	33,510	33,550	9
10	36,120	36,170	36,220	36,270	36,320	36,370	36,420	36,480	36,530	36,580	36,630	36,680	36,730	36,780	36,830	36,880	36,930	36,980	37,030	37,080	37,130	10
11	39,460	39,520	39,580	39,630	39,690	39,740	39,800	39,860	39,910	39,970	40,020	40,080	40,130	40,190	40,240	40,300	40,350	40,410	40,460	40,520	40,570	11
12	43,080	43,140	43,210	43,270	43,330	43,390	43,450	43,510	43,570	43,640	43,700	43,760	43,820	43,880	43,940	44,000	44,060	44,120	44,180	44,240	44,300	12
13	46,650	46,710	46,780	46,850	46,920	46,980	47,050	47,120	47,180	47,250	47,320	47,380	47,450	47,520	47,580	47,650	47,710	47,780	47,840	47,910	47,980	13
14	50,120	50,200	50,270	50,340	50,420	50,490	50,560	50,630	50,710	50,780	50,850	50,920	51,000	51,070	51,140	51,210	51,280	51,350	51,420	51,500	51,570	14
15	53,560	53,640	53,720	53,800	53,880	53,960	54,040	54,120	54,200	54,270	54,350	54,430	54,510	54,590	54,670	54,740	54,820	54,900	54,980	55,050	55,130	15
16	56,940	57,020	57,100	57,190	57,270	57,360	57,440	57,520	57,610	57,690	57,770	57,860	57,940	58,020	58,110	58,190	58,270	58,350	58,440	58,520	58,600	16
17	62,240	62,340	62,430	62,530	62,630	62,720	62,820	62,910	63,010	63,100	63,200	63,290	63,380	63,470	63,570	63,660	63,750	63,840	63,930	64,020	64,110	17
18	67,540	67,650	67,760	67,870	67,980	68,090	68,190	68,300	68,410	68,510	68,620	68,720	68,820	68,930	69,030	69,130	69,230	69,330	69,420	69,520	69,620	18
19	72,850	72,970	73,090	73,210	73,330	73,450	73,570	73,690	73,810	73,920	74,040	74,150	74,260	74,380	74,490	74,600	74,710	74,810	74,920	75,020	75,130	19
20	77,830	77,960	78,100	78,230	78,360	78,490	78,620	78,750	78,880	79,010	79,140	79,270	79,390	79,520	79,640	79,770	79,890	80,010	80,140	80,260	80,370	20
21	82,810	82,960	83,100	83,250	83,390	83,530	83,680	83,820	83,960	84,100	84,240	84,380	84,520	84,660	84,800	84,940	85,080	85,210	85,350	85,490	85,620	21
22	87,800	87,950	88,110	88,260	88,420	88,570	88,730	88,880	89,040	89,190	89,350	89,500	89,650	89,810	89,960	90,110	90,260	90,410	90,570	90,720	90,870	22
23	93,840	93,970	94,110	94,240	94,370	94,500	94,630	94,760	94,890	95,020	95,150	95,280	95,410	95,540	95,660	95,790	95,910	96,040	96,160	96,290	96,410	23
24	99,880	99,990	100,100	100,200	100,300	100,400	100,500	100,600	100,700	100,900	101,000	101,100	101,200	101,300	101,400	101,500	101,600	101,700	101,800	101,900	102,000	24
25	105,900	106,000	106,100	106,200	106,300	106,400	106,400	106,500	106,600	106,700	106,800	106,800	106,900	107,000	107,100	107,100	107,200	107,300	107,400	107,400	107,500	25
26	109,300	109,500	109,700	109,900	110,100	110,300	110,500	110,700	110,900	111,100	111,400	111,500	111,500	111,600	111,600	111,700	111,700	111,800	111,800	111,900	111,900	26
27	112,700	113,000	113,400	113,700	114,000	114,300	114,600	115,000	115,300	115,600	116,100	116,100	116,200	116,200	116,200	116,200	116,300	116,300	116,300	116,400	116,400	27
28	116,100	116,600	117,000	117,400	117,900	118,300	118,700	119,200	119,600	120,100	120,800	120,800	120,800	120,800	120,800	120,800	120,800	120,800	120,800	120,800	120,800	28

MAY 2008

See special instruction for preventing gate overflow on page 2.

HEADWATER 812 to 816
TAILWATER 781.51 to 782.5

TELLICO DAM
SPILLWAY DISCHARGE
IN CUBIC FEET PER SECOND

HEADWATER ELEVATION

GATE ARRANGEMENT	816.0	816.1	816.2	816.3	816.4	816.5	816.6	816.7	816.8	816.9	817.0	817.1	817.2	817.3	817.4	817.5	817.6	817.7	817.8	817.9	818.0	GATE ARRANGEMENT
1																						1
2	6,570	6,580	6,590																			2
3	10,220	10,240	10,250	10,270	10,280	10,300	10,310	10,330	10,340	10,360	10,370											3
4	13,980	14,010	14,030	14,050	14,070	14,090	14,110	14,130	14,160	14,180	14,200	14,400	14,760	15,230	15,780	16,400	17,090	17,840				4
5	18,050	18,080	18,110	18,130	18,160	18,190	18,210	18,240	18,270	18,290	18,320	18,530	18,900	19,370	19,920	20,550	21,240	22,000	22,820	23,700	24,630	5
6	21,820	21,860	21,890	21,920	21,960	21,990	22,020	22,050	22,090	22,120	22,150	22,370	22,740	23,220	23,780	24,410	25,120	25,880	26,710	27,590	28,530	6
7	25,900	25,940	25,970	26,010	26,050	26,080	26,120	26,150	26,190	26,230	26,260	26,480	26,850	27,330	27,900	28,530	29,240	30,010	30,830	31,720	32,660	7
8	29,840	29,880	29,920	29,960	30,000	30,040	30,080	30,120	30,160	30,200	30,240	30,460	30,840	31,320	31,880	32,520	33,230	34,000	34,830	35,720	36,660	8
9	33,550	33,600	33,640	33,690	33,730	33,770	33,820	33,860	33,910	33,950	34,000	34,230	34,610	35,100	35,670	36,320	37,030	37,810	38,640	39,540	40,490	9
10	37,130	37,180	37,230	37,280	37,330	37,380	37,430	37,480	37,520	37,570	37,620	37,850	38,240	38,730	39,310	39,960	40,680	41,460	42,300	43,200	44,150	10
11	40,570	40,620	40,680	40,730	40,790	40,840	40,900	40,950	41,000	41,060	41,110	41,350	41,740	42,240	42,820	43,470	44,190	44,980	45,830	46,730	47,680	11
12	44,300	44,360	44,420	44,480	44,540	44,600	44,660	44,720	44,780	44,840	44,900	45,140	45,540	46,040	46,620	47,280	48,010	48,800	49,660	50,560	51,520	12
13	47,980	48,040	48,110	48,170	48,240	48,300	48,370	48,430	48,500	48,560	48,630	48,870	49,280	49,790	50,380	51,040	51,780	52,580	53,430	54,340	55,310	13
14	51,570	51,640	51,710	51,780	51,850	51,920	51,990	52,060	52,130	52,200	52,270	52,530	52,940	53,450	54,050	54,720	55,460	56,260	57,120	58,040	59,020	14
15	55,130	55,210	55,290	55,360	55,440	55,520	55,590	55,670	55,750	55,820	55,900	56,160	56,580	57,090	57,700	58,380	59,120	59,930	60,800	61,720	62,700	15
16	58,600	58,680	58,760	58,840	58,920	58,990	59,070	59,150	59,230	59,310	59,390	59,650	60,070	60,590	61,190	61,870	62,620	63,430	64,300	65,230	66,210	16
17	64,110	64,200	64,280	64,370	64,450	64,540	64,620	64,710	64,790	64,870	64,950	65,220	65,640	66,160	66,770	67,450	68,200	69,020	69,890	70,820	71,800	17
18	69,620	69,710	69,810	69,900	69,990	70,080	70,170	70,260	70,350	70,430	70,520	70,790	71,210	71,740	72,350	73,040	73,790	74,600	75,480	76,400	77,390	18
19	75,130	75,230	75,330	75,430	75,530	75,620	75,720	75,810	75,910	76,000	76,090	76,360	76,790	77,320	77,930	78,620	79,370	80,190	81,060	81,990	82,980	19
20	80,370	80,490	80,610	80,720	80,840	80,950	81,070	81,180	81,290	81,400	81,510	81,800	82,250	82,800	83,430	84,140	84,910	85,750	86,640	87,600	88,600	20
21	85,620	85,750	85,890	86,020	86,150	86,280	86,410	86,540	86,670	86,800	86,930	87,240	87,710	88,270	88,930	89,660	90,450	91,310	92,220	93,200	94,220	21
22	90,870	91,020	91,170	91,320	91,460	91,610	91,760	91,910	92,050	92,200	92,350	92,680	93,160	93,750	94,430	95,170	95,990	96,870	97,800	98,800	99,850	22
23	96,410	96,550	96,700	96,840	96,980	97,120	97,260	97,400	97,540	97,680	97,820	98,140	98,620	99,200	99,870	100,600	101,400	102,300	103,200	104,200	105,200	23
24	102,000	102,100	102,200	102,400	102,500	102,600	102,800	102,900	103,000	103,200	103,300	103,600	104,100	104,600	105,300	106,000	106,800	107,700	108,600	109,600	110,600	24
25	107,500	107,600	107,800	107,900	108,000	108,100	108,300	108,400	108,500	108,600	108,800	109,100	109,500	110,100	110,700	111,500	112,300	113,100	114,000	115,000	116,000	25
26	111,900	112,000	112,100	112,200	112,300	112,400	112,500	112,600	112,600	112,700	112,800	113,100	113,500	114,000	114,700	115,300	116,100	116,900	117,800	118,700	119,700	26
27	116,400	116,400	116,500	116,500	116,600	116,600	116,700	116,700	116,800	116,800	116,900	117,100	117,500	118,000	118,600	119,200	119,900	120,700	121,600	122,500	123,400	27
28	120,800	120,800	120,900	120,900	120,900	120,900	120,900	120,900	120,900	120,900	120,900	121,100	121,500	121,900	122,500	123,100	123,800	124,500	125,300	126,200	127,100	28

HEADWATER ELEVATION

GATE ARRANGEMENT	818.0	818.1	818.2	818.3	818.4	818.5	818.6	818.7	818.8	818.9	819.0	819.1	819.2	819.3	819.4	819.5	819.6	819.7	819.8	819.9	820.0	GATE ARRANGEMENT
1																						1
2																						2
3																						3
4																						4
5	24,630	25,610	26,640	27,720	28,850																	5
6	28,530	29,510	30,550	31,640	32,770	33,950	35,180	36,450	37,760	39,120	40,520	41,960										6
7	32,660	33,640	34,680	35,770	36,910	38,090	39,320	40,590	41,900	43,260	44,660	46,100	47,580	49,100	50,660	52,260	53,900	55,570	57,290			7
8	36,660	37,660	38,700	39,790	40,930	42,110	43,340	44,620	45,940	47,300	48,700	50,140	51,620	53,150	54,710	56,310	57,950	59,630	61,350	63,100	64,890	8
9	40,490	41,480	42,530	43,630	44,780	45,970	47,210	48,490	49,810	51,180	52,590	54,040	55,530	57,060	58,630	60,240	61,880	63,570	65,290	67,050	68,850	9
10	44,150	45,150	46,200	47,310	48,450	49,650	50,890	52,170	53,500	54,870	56,280	57,740	59,230	60,770	62,340	63,950	65,600	67,290	69,020	70,780	72,580	10
11	47,680	48,690	49,750	50,860	52,010	53,210	54,450	55,740	57,080	58,450	59,870	61,320	62,820	64,360	65,940	67,560	69,210	70,910	72,640	74,400	76,210	11
12	51,520	52,540	53,600	54,710	55,870	57,080	58,330	59,620	60,960	62,340	63,760	65,230	66,730	68,270	69,860	71,480	73,140	74,840	76,570	78,350	80,160	12
13	55,310	56,330	57,400	58,520	59,680	60,890	62,150	63,450	64,790	66,180	67,610	69,080	70,590	72,140	73,720	75,350	77,020	78,720	80,460	82,240	84,060	13
14	59,020	60,040	61,110	62,240	63,410	64,620	65,890	67,190	68,540	69,930	71,370	72,840	74,360	75,910	77,510	79,140	80,810	82,520	84,270	86,050	87,870	14
15	62,700	63,730	64,810	65,940	67,120	68,340	69,610	70,920	72,280	73,670	75,110	76,590	78,110	79,680	81,280	82,920	84,590	86,310	88,060	89,850	91,680	15
16	66,210	67,240	68,320	69,450	70,630	71,850	73,120	74,430	75,790	77,190	78,630	80,110	81,630	83,200	84,800	86,440	88,120	89,830	91,590	93,380	95,210	16
17	71,800	72,830	73,910	75,040	76,220	77,440	78,710	80,030	81,380	82,780	84,220	85,700	87,220	88,780	90,380	92,020	93,700	95,410	97,160	98,950	100,800	17
18	77,390	78,420	79,500	80,630	81,810	83,040	84,310	85,620	86,970	88,370	89,810	91,290	92,810	94,370	95,970	97,600	99,280	101,000	102,700	104,500	106,400	18
19	82,980	84,010	85,100	86,230	87,410	88,630	89,900	91,210	92,560	93,960	95,400	96,880	98,390	99,950	101,500	103,200	104,900	106,600	108,300	110,100	111,900	19
20	88,600	89,660	90,760	91,920	93,120	94,360	95,650	96,990	98,360	99,780	101,200	102,700	104,300	105,900	107,500	109,100	110,800	112,600	114,400	116,200	118,000	20
21	94,220	95,300	96,430	97,600	98,830	100,100	101,400	102,800	104,200	105,600	107,100	108,600	110,200	111,800	113,400	115,100	116,800	118,600	120,400	122,200	124,100	21
22	99,850	100,900	102,100	103,300	104,500	105,800	107,200	108,500	110,000	111,400	112,900	114,500	116,100	117,700	119,400	121,100	122,800	124,600	126,400	128,300	130,200	22
23	105,200	106,300	107,500	108,700	109,900	111,200	112,600	114,000	115,400	116,900	118,400	119,900	121,500	123,100	124,800	126,500	128,300	130,100	131,900	133,700	135,600	23
24	110,600	111,700	112,900	114,100	115,300	116,600	118,000	119,400	120,800	122,300	123,800	125,400	127,000	128,600	130,300	132,000	133,700	135,500	137,400	139,200	141,100	24
25	116,000	117,100	118,300	119,500	120,800	122,100	123,400	124,800	126,200	127,700	129,200	130,800	132,400	134,000	135,700	137,400	139,200	141,000	142,800	144,700	146,600	25
26	119,700	120,800	122,000	123,300	124,500	125,800	127,200	128,600	130,100	131,600	133,100	134,700	136,300	138,000	139,700	141,400	143,200	145,000	146,800	148,700	150,600	26
27	123,400	124,600	125,800	127,000	128,300	129,600	131,000	132,400	133,900	135,400	137,000	138,600	140,200	141,900	143,600	145,300	147,100	149,000	150,800	152,700	154,700	27
28	127,100	128,300	129,500	130,800	132,100	133,400	134,800	136,300	137,800	139,300	140,900	142,500	144,100	145,800	147,500	149,300	151,100	153,000	154,800	156,800	158,700	28

HEADWATER 816 to 820
TAILWATER 781.51 to 782.5

See special instruction for preventing gate overflow on page 2.

MAY 2008

TELLICO DAM
SPILLWAY DISCHARGE
IN CUBIC FEET PER SECOND

HEADWATER ELEVATION

GATE ARRANGEMENT	800.0	800.1	800.2	800.3	800.4	800.5	800.6	800.7	800.8	800.9	801.0	801.1	801.2	801.3	801.4	801.5	801.6	801.7	801.8	801.9	802.0	GATE ARRANGEMENT
1	2,150	2,160	2,160	2,170	2,180	2,180	2,190	2,190	2,200	2,210	2,210	2,220	2,220	2,230	2,240	2,240	2,250	2,260	2,260	2,270	2,270	1
2	4,640	4,650	4,670	4,680	4,690	4,710	4,720	4,730	4,750	4,760	4,770	4,790	4,800	4,810	4,830	4,840	4,850	4,870	4,880	4,890	4,910	2
3	7,210	7,230	7,260	7,280	7,300	7,320	7,340	7,360	7,380	7,400	7,420	7,440	7,460	7,480	7,500	7,520	7,540	7,560	7,590	7,610	7,630	3
4	9,710	9,740	9,770	9,800	9,830	9,860	9,890	9,920	9,940	9,970	10,000	10,030	10,060	10,090	10,110	10,140	10,170	10,200	10,230	10,250	10,280	4
5	12,580	12,620	12,650	12,690	12,730	12,770	12,800	12,840	12,880	12,910	12,950	12,990	13,030	13,060	13,100	13,140	13,170	13,210	13,250	13,280	13,320	5
6	15,280	15,320	15,370	15,410	15,460	15,500	15,540	15,590	15,630	15,680	15,720	15,760	15,810	15,850	15,900	15,940	15,980	16,030	16,070	16,110	16,160	6
7	18,380	18,430	18,490	18,540	18,590	18,650	18,700	18,750	18,810	18,860	18,910	18,960	19,020	19,070	19,120	19,170	19,230	19,280	19,330	19,380	19,440	7
8	21,480	21,540	21,610	21,670	21,730	21,790	21,860	21,920	21,980	22,040	22,100	22,170	22,230	22,290	22,350	22,410	22,470	22,540	22,600	22,660	22,720	8
9	24,400	24,470	24,540	24,610	24,670	24,740	24,810	24,880	24,940	25,010	25,080	25,140	25,210	25,280	25,350	25,410	25,480	25,540	25,610	25,680	25,740	9
10	27,300	27,370	27,450	27,520	27,590	27,660	27,730	27,800	27,870	27,940	28,010	28,080	28,150	28,220	28,290	28,370	28,430	28,500	28,570	28,640	28,710	10
11	30,140	30,220	30,290	30,370	30,440	30,520	30,590	30,670	30,740	30,820	30,890	30,960	31,040	31,110	31,190	31,260	31,330	31,410	31,480	31,550	31,620	11
12	32,880	32,960	33,040	33,120	33,200	33,280	33,370	33,450	33,530	33,610	33,690	33,770	33,850	33,930	34,010	34,090	34,170	34,250	34,330	34,400	34,480	12
13	35,550	35,640	35,730	35,820	35,900	35,990	36,080	36,170	36,250	36,340	36,430	36,510	36,600	36,690	36,770	36,860	36,940	37,030	37,110	37,200	37,280	13
14	38,140	38,230	38,330	38,420	38,520	38,610	38,710	38,800	38,900	38,990	39,080	39,180	39,270	39,370	39,460	39,550	39,640	39,740	39,830	39,920	40,010	14
15	40,700	40,800	40,900	41,000	41,100	41,200	41,310	41,410	41,510	41,610	41,710	41,810	41,910	42,010	42,100	42,200	42,300	42,400	42,500	42,590	42,690	15
16	43,160	43,270	43,380	43,490	43,590	43,700	43,810	43,920	44,020	44,130	44,240	44,340	44,450	44,550	44,660	44,760	44,870	44,970	45,080	45,180	45,280	16
17	47,120	47,230	47,350	47,460	47,580	47,690	47,810	47,920	48,030	48,150	48,260	48,370	48,480	48,590	48,700	48,810	48,920	49,030	49,140	49,250	49,360	17
18	51,080	51,200	51,320	51,440	51,560	51,680	51,800	51,920	52,040	52,160	52,280	52,400	52,510	52,630	52,750	52,860	52,980	53,090	53,210	53,320	53,440	18
19	55,030	55,160	55,290	55,420	55,550	55,670	55,800	55,930	56,050	56,180	56,300	56,420	56,540	56,670	56,790	56,910	57,030	57,150	57,270	57,390	57,510	19
20	56,640	56,850	57,050	57,260	57,470	57,670	57,880	58,090	58,290	58,500	58,710	58,910	59,120	59,320	59,530	59,730	59,940	60,140	60,350	60,550	60,760	20
21	58,240	58,530	58,810	59,100	59,390	59,670	59,960	60,250	60,540	60,820	61,110	61,400	61,690	61,980	62,270	62,550	62,840	63,130	63,420	63,710	64,000	21
22	59,840	60,210	60,570	60,940	61,310	61,670	62,040	62,410	62,780	63,150	63,520	63,890	64,260	64,630	65,000	65,380	65,750	66,120	66,500	66,880	67,250	22
23	59,840	60,210	60,570	60,940	61,310	61,670	62,040	62,410	62,780	63,150	63,520	63,890	64,260	64,630	65,000	65,380	65,750	66,120	66,500	66,880	67,250	23
24	59,840	60,210	60,570	60,940	61,310	61,670	62,040	62,410	62,780	63,150	63,520	63,890	64,260	64,630	65,000	65,380	65,750	66,120	66,500	66,880	67,250	24
25	59,840	60,210	60,570	60,940	61,310	61,670	62,040	62,410	62,780	63,150	63,520	63,890	64,260	64,630	65,000	65,380	65,750	66,120	66,500	66,880	67,250	25
26	59,840	60,210	60,570	60,940	61,310	61,670	62,040	62,410	62,780	63,150	63,520	63,890	64,260	64,630	65,000	65,380	65,750	66,120	66,500	66,880	67,250	26
27	59,840	60,210	60,570	60,940	61,310	61,670	62,040	62,410	62,780	63,150	63,520	63,890	64,260	64,630	65,000	65,380	65,750	66,120	66,500	66,880	67,250	27
28	59,840	60,210	60,570	60,940	61,310	61,670	62,040	62,410	62,780	63,150	63,520	63,890	64,260	64,630	65,000	65,380	65,750	66,120	66,500	66,880	67,250	28

HEADWATER ELEVATION

GATE ARRANGEMENT	802.0	802.1	802.2	802.3	802.4	802.5	802.6	802.7	802.8	802.9	803.0	803.1	803.2	803.3	803.4	803.5	803.6	803.7	803.8	803.9	804.0	GATE ARRANGEMENT
1	2,270	2,280	2,290	2,290	2,300	2,300	2,310	2,310	2,320	2,330	2,330	2,340	2,340	2,350	2,360	2,360	2,370	2,370	2,380	2,380	2,390	1
2	4,910	4,920	4,930	4,940	4,960	4,970	4,980	5,000	5,010	5,020	5,030	5,050	5,060	5,070	5,080	5,100	5,110	5,120	5,130	5,150	5,160	2
3	7,630	7,650	7,670	7,690	7,710	7,730	7,740	7,760	7,780	7,800	7,820	7,840	7,860	7,880	7,900	7,920	7,940	7,960	7,980	8,000	8,020	3
4	10,280	10,310	10,340	10,370	10,390	10,420	10,450	10,480	10,510	10,530	10,560	10,590	10,620	10,640	10,670	10,700	10,720	10,750	10,780	10,810	10,830	4
5	13,320	13,360	13,390	13,430	13,470	13,500	13,540	13,580	13,610	13,650	13,680	13,720	13,750	13,790	13,820	13,860	13,890	13,930	13,960	14,000	14,030	5
6	16,160	16,200	16,240	16,290	16,330	16,370	16,420	16,460	16,500	16,540	16,590	16,630	16,670	16,710	16,760	16,800	16,840	16,880	16,920	16,960	17,000	6
7	19,440	19,490	19,540	19,590	19,640	19,700	19,750	19,800	19,850	19,900	19,950	20,000	20,050	20,100	20,150	20,200	20,250	20,300	20,350	20,400	20,450	7
8	22,720	22,780	22,840	22,900	22,960	23,020	23,080	23,140	23,200	23,260	23,320	23,380	23,440	23,500	23,560	23,610	23,670	23,730	23,790	23,850	23,900	8
9	25,740	25,810	25,870	25,940	26,010	26,070	26,140	26,200	26,260	26,330	26,390	26,460	26,520	26,590	26,650	26,710	26,770	26,840	26,900	26,960	27,020	9
10	28,710	28,780	28,850	28,920	28,990	29,060	29,130	29,200	29,260	29,330	29,400	29,470	29,530	29,600	29,670	29,740	29,800	29,870	29,940	30,000	30,070	10
11	31,620	31,700	31,770	31,840	31,910	31,990	32,060	32,130	32,200	32,270	32,340	32,410	32,490	32,560	32,630	32,700	32,770	32,840	32,910	32,980	33,050	11
12	34,480	34,560	34,640	34,720	34,800	34,870	34,950	35,030	35,110	35,180	35,260	35,340	35,420	35,490	35,570	35,640	35,720	35,800	35,870	35,950	36,020	12
13	37,280	37,370	37,450	37,540	37,620	37,710	37,790	37,870	37,960	38,040	38,120	38,210	38,290	38,370	38,460	38,540	38,620	38,700	38,780	38,870	38,950	13
14	40,010	40,100	40,190	40,290	40,380	40,470	40,560	40,650	40,740	40,830	40,920	41,010	41,100	41,180	41,270	41,360	41,450	41,540	41,630	41,720	41,800	14
15	42,690	42,790	42,890	42,980	43,080	43,180	43,270	43,370	43,460	43,560	43,650	43,750	43,840	43,940	44,030	44,120	44,220	44,310	44,410	44,500	44,590	15
16	45,280	45,390	45,490	45,590	45,690	45,800	45,900	46,000	46,100	46,200	46,300	46,400	46,500	46,600	46,700	46,800	46,900	47,000	47,100	47,200	47,290	16
17	49,360	49,470	49,580	49,690	49,790	49,900	50,010	50,120	50,220	50,330	50,440	50,540	50,650	50,760	50,870	50,970	51,080	51,190	51,290	51,400	51,510	17
18	53,440	53,550	53,660	53,780	53,890	54,010	54,120	54,230	54,350	54,460	54,570	54,690	54,800	54,910	55,030	55,140	55,260	55,370	55,490	55,600	55,720	18
19	57,510	57,630	57,750	57,870	57,990	58,110	58,230	58,350	58,470	58,590	58,710	58,830	58,950	59,070	59,190	59,310	59,440	59,560	59,680	59,810	59,930	19
20	60,760	60,960	61,170	61,370	61,580	61,790	61,990	62,200	62,410	62,610	62,820	63,030	63,240	63,440	63,650	63,860	64,070	64,280	64,490	64,700	64,900	20
21	64,000	64,300	64,590	64,880	65,170	65,460	65,760	66,050	66,340	66,640	66,930	67,230	67,520	67,820	68,110	68,410	68,710	69,010	69,300	69,600	69,870	21
22	67,250	67,630	68,000	68,380	68,760	69,140	69,520	69,900	70,280	70,660	71,040	71,420	71,810	72,190	72,570	72,960	73,340	73,730	74,120	74,500	74,850	22
23	67,250	67,630	68,000	68,380	68,760	69,140	69,520	69,900	70,280	70,660	71,040	71,420	71,810	72,190	72,570	72,960	73,340	73,730	74,120	74,500	74,860	23
24	67,250	67,630	68,000	68,380	68,760	69,140	69,520	69,900	70,280	70,660	71,040	71,420	71,810	72,190	72,570	72,960	73,340	73,730	74,120	74,500	74,870	24
25	67,250	67,630	68,000	68,380	68,760	69,140	69,520	69,900	70,280	70,660	71,040	71,420	71,810	72,190	72,570	72,960	73,340	73,730	74,120	74,500	74,890	25
26	67,250	67,630	68,000	68,380	68,760	69,140	69,520	69,900	70,280	70,660	71,040	71,420	71,810	72,190	72,570	72,960	73,340	73,730	74,120	74,500	74,890	26
27	67,250	67,630	68,000	68,380	68,760	69,140	69,520	69,900	70,280	70,660	71,040	71,420	71,810	72,190	72,570	72,960	73,340	73,730	74,120	74,500	74,890	27
28	67,250	67,630	68,000	68,380	68,760	69,140	69,520	69,900	70,280	70,660	71,040	71,420	71,810	72,190	72,570	72,960	73,340	73,730	74,120	74,500	74,890	28

MAY 2008

HEADWATER 800 to 804
TAILWATER 782.51 to 783.5

TELLICO DAM
SPILLWAY DISCHARGE
IN CUBIC FEET PER SECOND

GATE ARRANGEMENT	HEADWATER ELEVATION																				GATE ARRANGEMENT
	804.0	804.1	804.2	804.3	804.4	804.5	804.6	804.7	804.8	804.9	805.0	805.1	805.2	805.3	805.4	805.5	805.6	805.7	805.8	805.9	806.0	
1	2,390	2,400	2,400	2,410	2,410	2,420	2,420	2,430	2,430	2,440	2,450	2,450	2,460	2,460	2,470	2,470	2,480	2,480	2,490	2,500	2,500	1
2	5,160	5,170	5,180	5,190	5,210	5,220	5,230	5,240	5,250	5,270	5,280	5,290	5,300	5,310	5,330	5,340	5,350	5,360	5,370	5,390	5,400	2
3	8,020	8,040	8,050	8,070	8,090	8,110	8,130	8,150	8,170	8,190	8,210	8,220	8,240	8,260	8,280	8,300	8,320	8,330	8,350	8,370	8,390	3
4	10,830	10,860	10,890	10,910	10,940	10,970	11,000	11,020	11,050	11,080	11,100	11,130	11,160	11,180	11,210	11,240	11,260	11,290	11,310	11,340	11,370	4
5	14,030	14,070	14,100	14,140	14,170	14,200	14,240	14,270	14,300	14,340	14,370	14,400	14,430	14,470	14,500	14,530	14,560	14,600	14,630	14,660	14,690	5
6	17,000	17,040	17,080	17,120	17,160	17,200	17,240	17,280	17,320	17,360	17,400	17,440	17,480	17,520	17,560	17,600	17,640	17,670	17,710	17,750	17,790	6
7	20,450	20,500	20,550	20,590	20,640	20,690	20,740	20,790	20,830	20,880	20,930	20,970	21,020	21,070	21,110	21,160	21,200	21,250	21,300	21,340	21,390	7
8	23,900	23,960	24,020	24,070	24,130	24,180	24,240	24,300	24,350	24,410	24,460	24,510	24,570	24,620	24,680	24,730	24,780	24,840	24,890	24,940	24,990	8
9	27,020	27,090	27,150	27,210	27,270	27,330	27,390	27,450	27,510	27,570	27,630	27,690	27,750	27,810	27,870	27,930	27,980	28,040	28,100	28,160	28,220	9
10	30,070	30,140	30,200	30,270	30,330	30,400	30,460	30,530	30,590	30,660	30,720	30,780	30,850	30,910	30,980	31,040	31,100	31,170	31,230	31,290	31,350	10
11	33,050	33,110	33,180	33,250	33,320	33,390	33,460	33,530	33,590	33,660	33,730	33,800	33,860	33,930	34,000	34,070	34,130	34,200	34,270	34,330	34,400	11
12	36,020	36,100	36,170	36,250	36,320	36,400	36,470	36,550	36,620	36,700	36,770	36,850	36,920	36,990	37,070	37,140	37,210	37,290	37,360	37,430	37,510	12
13	38,950	39,030	39,110	39,190	39,270	39,350	39,430	39,510	39,590	39,670	39,760	39,840	39,920	39,990	40,070	40,150	40,230	40,310	40,390	40,470	40,550	13
14	41,800	41,890	41,980	42,070	42,150	42,240	42,330	42,410	42,500	42,590	42,670	42,760	42,850	42,930	43,020	43,100	43,190	43,270	43,360	43,450	43,530	14
15	44,590	44,690	44,780	44,880	44,970	45,070	45,160	45,260	45,350	45,450	45,540	45,630	45,730	45,820	45,910	46,010	46,100	46,190	46,280	46,380	46,470	15
16	47,290	47,400	47,500	47,600	47,710	47,810	47,910	48,010	48,110	48,210	48,320	48,420	48,520	48,620	48,720	48,820	48,920	49,020	49,120	49,220	49,320	16
17	51,510	51,620	51,730	51,840	51,950	52,060	52,170	52,280	52,390	52,500	52,610	52,720	52,830	52,950	53,060	53,170	53,280	53,390	53,500	53,610	53,720	17
18	55,720	55,840	55,950	56,070	56,190	56,310	56,430	56,550	56,670	56,790	56,910	57,030	57,150	57,270	57,390	57,510	57,640	57,760	57,880	58,000	58,120	18
19	59,930	60,050	60,180	60,310	60,430	60,560	60,690	60,820	60,950	61,080	61,210	61,340	61,470	61,600	61,730	61,860	61,990	62,130	62,260	62,390	62,530	19
20	64,900	65,060	65,220	65,370	65,530	65,690	65,850	66,000	66,160	66,320	66,480	66,640	66,800	66,950	67,110	67,270	67,430	67,590	67,740	67,900	68,060	20
21	69,870	70,060	70,250	70,440	70,630	70,820	71,000	71,190	71,380	71,570	71,750	71,940	72,120	72,310	72,490	72,680	72,860	73,050	73,230	73,410	73,600	21
22	74,850	75,070	75,290	75,510	75,730	75,940	76,160	76,380	76,590	76,810	77,020	77,240	77,450	77,660	77,880	78,090	78,300	78,510	78,720	78,920	79,130	22
23	74,860	75,140	75,410	75,690	75,970	76,240	76,520	76,790	77,060	77,340	77,610	77,890	78,160	78,430	78,700	78,980	79,250	79,520	79,790	80,060	80,330	23
24	74,870	75,210	75,540	75,870	76,200	76,540	76,870	77,200	77,530	77,870	78,200	78,530	78,870	79,200	79,530	79,870	80,200	80,540	80,870	81,200	81,540	24
25	74,890	75,280	75,660	76,050	76,440	76,830	77,220	77,610	78,000	78,400	78,790	79,180	79,580	79,970	80,360	80,760	81,150	81,550	81,950	82,340	82,740	25
26	74,890	75,280	75,660	76,050	76,440	76,830	77,220	77,610	78,000	78,400	78,790	79,180	79,580	79,970	80,360	80,760	81,150	81,550	81,950	82,340	82,740	26
27	74,890	75,280	75,660	76,050	76,440	76,830	77,220	77,610	78,000	78,400	78,790	79,180	79,580	79,970	80,360	80,760	81,150	81,550	81,950	82,340	82,740	27
28	74,890	75,280	75,660	76,050	76,440	76,830	77,220	77,610	78,000	78,400	78,790	79,180	79,580	79,970	80,360	80,760	81,150	81,550	81,950	82,340	82,740	28

GATE ARRANGEMENT	HEADWATER ELEVATION																				GATE ARRANGEMENT
	806.0	806.1	806.2	806.3	806.4	806.5	806.6	806.7	806.8	806.9	807.0	807.1	807.2	807.3	807.4	807.5	807.6	807.7	807.8	807.9	808.0	
1	2,500	2,510	2,510	2,520	2,520	2,530	2,530	2,540	2,540	2,550	2,550	2,560	2,570	2,570	2,580	2,580	2,590	2,590	2,600	2,600	2,610	1
2	5,400	5,410	5,420	5,430	5,440	5,460	5,470	5,480	5,490	5,500	5,510	5,520	5,540	5,550	5,560	5,570	5,580	5,590	5,600	5,620	5,630	2
3	8,390	8,410	8,430	8,440	8,460	8,480	8,500	8,520	8,530	8,550	8,570	8,590	8,610	8,620	8,640	8,660	8,680	8,690	8,710	8,730	8,750	3
4	11,370	11,390	11,420	11,450	11,470	11,500	11,520	11,550	11,580	11,600	11,630	11,650	11,680	11,700	11,730	11,760	11,780	11,810	11,830	11,860	11,880	4
5	14,690	14,720	14,760	14,790	14,820	14,850	14,880	14,910	14,950	14,980	15,010	15,040	15,070	15,100	15,130	15,160	15,190	15,230	15,260	15,290	15,320	5
6	17,790	17,830	17,860	17,900	17,940	17,980	18,010	18,050	18,090	18,120	18,160	18,200	18,240	18,270	18,310	18,350	18,380	18,420	18,450	18,490	18,530	6
7	21,390	21,430	21,480	21,520	21,570	21,610	21,660	21,700	21,740	21,790	21,830	21,880	21,920	21,960	22,010	22,050	22,090	22,140	22,180	22,220	22,270	7
8	24,990	25,050	25,100	25,150	25,200	25,250	25,310	25,360	25,410	25,460	25,510	25,560	25,610	25,660	25,710	25,760	25,810	25,860	25,910	25,960	26,010	8
9	28,220	28,270	28,330	28,390	28,440	28,500	28,560	28,620	28,670	28,730	28,780	28,840	28,900	28,950	29,010	29,060	29,120	29,170	29,230	29,280	29,340	9
10	31,350	31,420	31,480	31,540	31,600	31,670	31,730	31,790	31,850	31,910	31,970	32,040	32,100	32,160	32,220	32,280	32,340	32,400	32,460	32,520	32,580	10
11	34,400	34,470	34,530	34,600	34,660	34,730	34,800	34,860	34,930	34,990	35,060	35,120	35,190	35,250	35,320	35,380	35,450	35,510	35,580	35,640	35,710	11
12	37,510	37,580	37,650	37,720	37,800	37,870	37,940	38,010	38,090	38,160	38,230	38,300	38,370	38,450	38,520	38,590	38,660	38,730	38,810	38,880	38,950	12
13	40,550	40,630	40,710	40,790	40,870	40,950	41,020	41,100	41,180	41,260	41,340	41,420	41,500	41,580	41,650	41,730	41,810	41,890	41,970	42,050	42,120	13
14	43,530	43,620	43,700	43,790	43,870	43,960	44,040	44,130	44,210	44,300	44,380	44,470	44,550	44,640	44,720	44,810	44,890	44,980	45,060	45,150	45,230	14
15	46,470	46,560	46,650	46,740	46,840	46,930	47,020	47,110	47,200	47,290	47,380	47,470	47,560	47,650	47,740	47,830	47,920	48,010	48,100	48,190	48,280	15
16	49,320	49,420	49,520	49,610	49,710	49,810	49,910	50,010	50,110	50,200	50,300	50,400	50,490	50,590	50,690	50,780	50,880	50,980	51,070	51,170	51,260	16
17	53,720	53,830	53,940	54,050	54,160	54,270	54,380	54,490	54,600	54,710	54,820	54,930	55,040	55,150	55,260	55,370	55,480	55,580	55,690	55,800	55,910	17
18	58,120	58,240	58,370	58,490	58,610	58,730	58,860	58,980	59,100	59,220	59,340	59,460	59,590	59,710	59,830	59,950	60,070	60,190	60,310	60,430	60,550	18
19	62,530	62,660	62,790	62,930	63,060	63,190	63,330	63,460	63,600	63,730	63,860	64,000	64,130	64,270	64,400	64,530	64,670	64,800	64,930	65,060	65,190	19
20	68,060	68,180	68,300	68,420	68,530	68,650	68,770	68,880	69,000	69,110	69,230	69,340	69,460	69,570	69,690	69,800	69,910	70,020	70,130	70,240	70,350	20
21	73,600	73,700	73,800	73,900	74,010	74,110	74,210	74,300	74,400	74,500	74,600	74,690	74,790	74,880	74,970	75,070	75,160	75,250	75,340	75,430	75,510	21
22	79,130	79,220	79,310	79,390	79,480	79,560	79,640	79,720	79,800	79,880	79,960	80,040	80,110	80,190	80,260	80,330	80,400	80,470	80,540	80,610	80,670	22
23	80,330	80,530	80,720	80,910	81,100	81,290	81,470	81,660	81,850	82,040	82,220	82,410	82,590	82,780	82,960	83,140	83,320	83,510	83,690	83,870	84,050	23
24	81,540	81,830	82,130	82,420	82,720	83,010	83,300	83,600	83,890	84,190	84,480	84,780	85,070	85,360	85,660	85,950	86,240	86,540	86,830	87,130	87,420	24
25	82,740	83,140	83,540	83,940	84,340	84,730	85,140	85,540	85,940	86,340	86,740	87,140	87,550	87,950	88,360	88,760	89,170	89,570	89,980	90,380	90,790	25
26	82,740	83,140	83,540	83,940	84,340	84,730	85,140	85,540	85,940	86,340	86,740	87,140	87,550	87,950	88,360	88,760	89,170	89,570	89,980	90,380	90,790	26
27	82,740	83,140	83,540	83,940	84,340	84,730	85,140	85,540	85,940	86,340	86,740	87,140	87,550	87,950	88,360	88,760	89,170	89,570	89,980	90,380	90,790	27
28	82,740	83,140	83,540	83,940	84,340	84,730	85,140	85,540	85,940	86,340	86,740	87,140	87,550	87,950	88,360	88,760	89,170	89,570	89,980	90,380	90,790	28

HEADWATER 804 to 808
TAILWATER 782.51 to 783.5

MAY 2008

TELLICO DAM
SPILLWAY DISCHARGE
IN CUBIC FEET PER SECOND

HEADWATER ELEVATION

GATE ARRANGEMENT	808.0	808.1	808.2	808.3	808.4	808.5	808.6	808.7	808.8	808.9	809.0	809.1	809.2	809.3	809.4	809.5	809.6	809.7	809.8	809.9	810.0	GATE ARRANGEMENT
1	2,610	2,610	2,620	2,620	2,630	2,630	2,640	2,640	2,650	2,650	2,660	2,660	2,670	2,670	2,680	2,680	2,690	2,690	2,700	2,700	2,710	1
2	5,630	5,640	5,650	5,660	5,670	5,680	5,690	5,710	5,720	5,730	5,740	5,750	5,760	5,770	5,780	5,790	5,800	5,820	5,830	5,840	5,850	2
3	8,750	8,760	8,780	8,800	8,820	8,830	8,850	8,870	8,890	8,900	8,920	8,940	8,950	8,970	8,990	9,010	9,020	9,040	9,060	9,070	9,090	3
4	11,880	11,910	11,930	11,960	11,980	12,010	12,030	12,060	12,080	12,110	12,130	12,160	12,180	12,210	12,230	12,260	12,280	12,300	12,330	12,350	12,380	4
5	15,320	15,350	15,380	15,410	15,440	15,470	15,500	15,530	15,560	15,590	15,630	15,660	15,690	15,720	15,750	15,780	15,810	15,840	15,870	15,900	15,930	5
6	18,530	18,560	18,600	18,640	18,670	18,710	18,750	18,780	18,820	18,850	18,890	18,930	18,960	19,000	19,030	19,070	19,110	19,140	19,180	19,210	19,250	6
7	22,270	22,310	22,350	22,400	22,440	22,480	22,520	22,570	22,610	22,650	22,700	22,740	22,780	22,820	22,860	22,910	22,950	22,990	23,030	23,080	23,120	7
8	26,010	26,060	26,110	26,160	26,210	26,260	26,310	26,350	26,400	26,450	26,500	26,550	26,600	26,640	26,690	26,740	26,790	26,840	26,880	26,930	26,980	8
9	29,340	29,400	29,450	29,510	29,560	29,610	29,670	29,720	29,780	29,830	29,890	29,940	30,000	30,050	30,100	30,160	30,210	30,270	30,320	30,370	30,430	9
10	32,580	32,640	32,700	32,760	32,820	32,880	32,940	33,000	33,060	33,120	33,180	33,240	33,300	33,360	33,410	33,470	33,530	33,590	33,650	33,710	33,770	10
11	35,710	35,770	35,840	35,900	35,970	36,030	36,090	36,160	36,220	36,290	36,350	36,420	36,480	36,540	36,610	36,670	36,740	36,800	36,860	36,930	36,990	11
12	38,950	39,020	39,090	39,160	39,230	39,310	39,380	39,450	39,520	39,590	39,660	39,730	39,800	39,880	39,950	40,020	40,090	40,160	40,230	40,300	40,370	12
13	42,120	42,200	42,280	42,360	42,440	42,520	42,600	42,670	42,750	42,830	42,910	42,990	43,070	43,140	43,220	43,300	43,380	43,460	43,530	43,610	43,690	13
14	45,230	45,320	45,410	45,490	45,580	45,660	45,750	45,830	45,920	46,010	46,090	46,180	46,260	46,350	46,440	46,520	46,610	46,690	46,780	46,860	46,950	14
15	48,280	48,370	48,460	48,560	48,650	48,740	48,840	48,930	49,020	49,120	49,210	49,300	49,390	49,480	49,580	49,670	49,760	49,850	49,940	50,040	50,130	15
16	51,260	51,360	51,470	51,570	51,670	51,770	51,870	51,970	52,070	52,170	52,270	52,370	52,470	52,570	52,670	52,770	52,870	52,970	53,070	53,160	53,260	16
17	55,910	56,020	56,130	56,240	56,350	56,460	56,570	56,680	56,790	56,900	57,010	57,120	57,230	57,340	57,450	57,560	57,660	57,770	57,880	57,990	58,100	17
18	60,550	60,670	60,790	60,910	61,030	61,150	61,270	61,390	61,510	61,630	61,750	61,870	61,990	62,110	62,230	62,340	62,460	62,580	62,700	62,810	62,930	18
19	65,190	65,330	65,460	65,590	65,720	65,850	65,980	66,110	66,240	66,360	66,490	66,620	66,750	66,880	67,000	67,130	67,260	67,380	67,510	67,640	67,760	19
20	70,350	70,480	70,610	70,730	70,850	70,980	71,100	71,220	71,350	71,470	71,590	71,710	71,830	71,950	72,070	72,190	72,310	72,430	72,550	72,660	72,780	20
21	75,510	75,630	75,750	75,870	75,990	76,110	76,230	76,340	76,460	76,570	76,690	76,800	76,910	77,030	77,140	77,250	77,360	77,470	77,580	77,690	77,800	21
22	80,670	80,790	80,900	81,020	81,130	81,240	81,350	81,460	81,570	81,680	81,780	81,890	82,000	82,100	82,210	82,310	82,410	82,510	82,610	82,710	82,810	22
23	84,050	84,260	84,470	84,680	84,890	85,100	85,310	85,520	85,730	85,940	86,150	86,360	86,570	86,780	86,980	87,190	87,400	87,600	87,810	88,010	88,220	23
24	87,420	87,730	88,040	88,350	88,660	88,970	89,280	89,590	89,900	90,210	90,520	90,830	91,140	91,450	91,760	92,070	92,380	92,690	93,000	93,310	93,630	24
25	90,790	91,200	91,610	92,020	92,420	92,830	93,240	93,650	94,070	94,480	94,890	95,300	95,710	96,130	96,540	96,950	97,370	97,780	98,200	98,610	99,030	25
26	90,790	91,200	91,610	92,020	92,420	92,830	93,240	93,650	94,070	94,480	94,890	95,300	95,710	96,130	96,540	96,950	97,370	97,780	98,200	98,610	99,030	26
27	90,790	91,200	91,610	92,020	92,420	92,830	93,240	93,650	94,070	94,480	94,890	95,300	95,710	96,130	96,540	96,950	97,370	97,780	98,200	98,610	99,030	27
28	90,790	91,200	91,610	92,020	92,420	92,830	93,240	93,650	94,070	94,480	94,890	95,300	95,710	96,130	96,540	96,950	97,370	97,780	98,200	98,610	99,030	28

HEADWATER ELEVATION

GATE ARRANGEMENT	810.0	810.1	810.2	810.3	810.4	810.5	810.6	810.7	810.8	810.9	811.0	811.1	811.2	811.3	811.4	811.5	811.6	811.7	811.8	811.9	812.0	GATE ARRANGEMENT
1	2,710	2,710	2,720	2,720	2,730	2,730	2,740	2,740	2,750	2,750	2,760	2,760	2,770	2,770	2,780	2,780	2,790	2,790	2,800	2,800	2,810	1
2	5,850	5,860	5,870	5,880	5,890	5,900	5,910	5,920	5,930	5,940	5,960	5,970	5,980	5,990	6,000	6,010	6,020	6,030	6,040	6,050	6,060	2
3	9,090	9,110	9,120	9,140	9,160	9,170	9,190	9,210	9,220	9,240	9,260	9,270	9,290	9,310	9,320	9,340	9,360	9,370	9,390	9,400	9,420	3
4	12,380	12,400	12,430	12,450	12,470	12,500	12,520	12,550	12,570	12,590	12,620	12,640	12,660	12,690	12,710	12,730	12,760	12,780	12,800	12,830	12,850	4
5	15,930	15,960	15,990	16,020	16,050	16,080	16,110	16,140	16,170	16,200	16,230	16,260	16,290	16,320	16,350	16,380	16,410	16,440	16,470	16,500	16,530	5
6	19,250	19,280	19,320	19,350	19,390	19,430	19,460	19,500	19,530	19,570	19,600	19,640	19,670	19,710	19,740	19,780	19,810	19,850	19,880	19,920	19,950	6
7	23,120	23,160	23,200	23,240	23,280	23,330	23,370	23,410	23,450	23,490	23,530	23,570	23,620	23,660	23,700	23,740	23,780	23,820	23,860	23,900	23,940	7
8	26,980	27,030	27,070	27,120	27,170	27,220	27,260	27,310	27,360	27,400	27,450	27,500	27,540	27,590	27,640	27,680	27,730	27,780	27,820	27,870	27,920	8
9	30,430	30,480	30,530	30,580	30,640	30,690	30,740	30,790	30,850	30,900	30,950	31,000	31,050	31,110	31,160	31,210	31,260	31,310	31,360	31,410	31,460	9
10	33,770	33,820	33,880	33,940	34,000	34,050	34,110	34,170	34,230	34,280	34,340	34,400	34,460	34,510	34,570	34,630	34,680	34,740	34,790	34,850	34,910	10
11	36,990	37,050	37,120	37,180	37,240	37,300	37,370	37,430	37,490	37,550	37,620	37,680	37,740	37,800	37,870	37,930	37,990	38,050	38,110	38,170	38,230	11
12	40,370	40,440	40,510	40,580	40,650	40,720	40,790	40,860	40,930	41,000	41,070	41,140	41,200	41,270	41,340	41,410	41,480	41,550	41,610	41,680	41,750	12
13	43,690	43,770	43,840	43,920	44,000	44,070	44,150	44,230	44,300	44,380	44,460	44,530	44,610	44,680	44,760	44,830	44,910	44,980	45,060	45,130	45,200	13
14	46,950	47,030	47,120	47,200	47,290	47,370	47,460	47,540	47,620	47,710	47,790	47,870	47,960	48,040	48,120	48,200	48,290	48,370	48,450	48,530	48,610	14
15	50,130	50,220	50,310	50,400	50,490	50,580	50,670	50,760	50,850	50,940	51,030	51,120	51,210	51,300	51,390	51,480	51,570	51,660	51,750	51,840	51,930	15
16	53,260	53,360	53,460	53,560	53,660	53,750	53,850	53,950	54,050	54,150	54,240	54,340	54,440	54,530	54,630	54,730	54,820	54,920	55,020	55,110	55,210	16
17	58,100	58,200	58,310	58,420	58,530	58,630	58,740	58,850	58,960	59,060	59,170	59,280	59,380	59,490	59,600	59,700	59,810	59,920	60,020	60,130	60,240	17
18	62,930	63,050	63,160	63,280	63,400	63,510	63,630	63,750	63,860	63,980	64,100	64,210	64,330	64,450	64,560	64,680	64,790	64,910	65,030	65,140	65,260	18
19	67,760	67,890	68,020	68,140	68,270	68,390	68,520	68,650	68,770	68,900	69,020	69,150	69,280	69,400	69,530	69,650	69,780	69,910	70,030	70,160	70,290	19
20	72,780	72,900	73,010	73,130	73,250	73,360	73,480	73,590	73,710	73,820	73,940	74,050	74,170	74,280	74,390	74,510	74,620	74,740	74,850	74,960	75,070	20
21	77,800	77,910	78,010	78,120	78,230	78,330	78,440	78,540	78,650	78,750	78,850	78,960	79,060	79,160	79,260	79,360	79,460	79,560	79,660	79,760	79,860	21
22	82,810	82,910	83,010	83,110	83,200	83,300	83,400	83,490	83,580	83,680	83,770	83,860	83,950	84,040	84,130	84,220	84,310	84,390	84,480	84,570	84,650	22
23	88,220	88,420	88,630	88,810	88,960	89,110	89,250	89,400	89,540	89,680	89,820	89,960	90,100	90,240	90,380	90,520	90,660	90,800	90,930	91,070	91,200	23
24	93,630	93,940	94,250	94,520	94,720	94,910	95,110	95,300	95,490	95,690	95,880	96,070	96,260	96,450	96,640	96,830	97,010	97,200	97,390	97,570	97,760	24
25	99,030	99,450	99,870	100,200	100,500	100,700	101,000	101,200	101,400	101,700	101,900	102,200	102,400	102,700	102,900	103,100	103,400	103,600	103,800	104,100	104,300	25
26	99,030	99,450	99,870	100,200	100,500	100,900	101,200	101,500	101,800	102,100	102,400	102,700	103,000	103,300	103,600	103,900	104,200	104,500	104,800	105,100	105,400	26
27	99,030	99,450	99,870	100,300	100,600	101,000	101,300	101,700	102,100	102,400	102,800	103,200	103,500	103,900	104,200	104,600	105,000	105,300	105,700	106,000	106,400	27
28	99,030	99,450	99,870	100,300	100,700	101,100	101,500	102,000	102,400	102,800	103,200	103,600	104,100	104,500	104,900	105,300	105,800	106,200	106,600	107,000	107,500	28

MAY 2008

HEADWATER 808 to 812
TAILWATER 782.51 to 783.5

TELLICO DAM
SPILLWAY DISCHARGE
IN CUBIC FEET PER SECOND

GATE ARRANGEMENT	HEADWATER ELEVATION																					GATE ARRANGEMENT
	812.0	812.1	812.2	812.3	812.4	812.5	812.6	812.7	812.8	812.9	813.0	813.1	813.2	813.3	813.4	813.5	813.6	813.7	813.8	813.9	814.0	
1	2,810	2,810	2,820	2,820	2,830	2,830	2,840	2,840	2,850	2,850	2,860	2,860	2,870	2,870	2,880	2,880	2,880	2,890	2,890	2,900	2,900	1
2	6,060	6,070	6,080	6,090	6,100	6,110	6,120	6,130	6,140	6,150	6,160	6,170	6,180	6,190	6,210	6,220	6,230	6,240	6,250	6,260	6,270	2
3	9,420	9,440	9,450	9,470	9,490	9,500	9,520	9,530	9,550	9,570	9,580	9,600	9,610	9,630	9,650	9,660	9,680	9,690	9,710	9,720	9,740	3
4	12,850	12,870	12,900	12,920	12,940	12,970	12,990	13,010	13,030	13,060	13,080	13,100	13,120	13,150	13,170	13,190	13,210	13,240	13,260	13,280	13,300	4
5	16,530	16,560	16,590	16,620	16,650	16,680	16,710	16,740	16,770	16,800	16,820	16,850	16,880	16,910	16,940	16,970	17,000	17,030	17,060	17,080	17,110	5
6	19,950	19,990	20,020	20,060	20,090	20,120	20,160	20,190	20,230	20,260	20,300	20,330	20,360	20,400	20,430	20,470	20,500	20,530	20,570	20,600	20,630	6
7	23,940	23,980	24,020	24,060	24,110	24,150	24,190	24,230	24,270	24,310	24,350	24,390	24,430	24,470	24,510	24,540	24,580	24,620	24,660	24,700	24,740	7
8	27,920	27,960	28,010	28,050	28,100	28,150	28,190	28,240	28,280	28,330	28,370	28,420	28,470	28,510	28,560	28,600	28,650	28,690	28,740	28,780	28,820	8
9	31,460	31,510	31,560	31,610	31,660	31,710	31,760	31,810	31,860	31,910	31,950	32,000	32,050	32,100	32,150	32,200	32,240	32,290	32,340	32,390	32,430	9
10	34,910	34,960	35,020	35,070	35,130	35,180	35,240	35,290	35,350	35,400	35,460	35,510	35,570	35,620	35,680	35,730	35,780	35,840	35,890	35,950	36,000	10
11	38,230	38,290	38,350	38,410	38,470	38,530	38,590	38,650	38,710	38,770	38,830	38,890	38,950	39,010	39,070	39,130	39,190	39,240	39,300	39,360	39,420	11
12	41,750	41,810	41,880	41,950	42,010	42,080	42,150	42,210	42,280	42,340	42,410	42,470	42,540	42,600	42,670	42,730	42,800	42,860	42,920	42,990	43,050	12
13	45,200	45,280	45,350	45,420	45,490	45,570	45,640	45,710	45,780	45,850	45,920	45,990	46,060	46,130	46,200	46,270	46,340	46,410	46,480	46,550	46,620	13
14	48,610	48,690	48,770	48,850	48,930	49,010	49,080	49,160	49,240	49,320	49,400	49,470	49,550	49,630	49,700	49,780	49,850	49,930	50,000	50,080	50,150	14
15	51,930	52,010	52,090	52,170	52,250	52,340	52,420	52,500	52,580	52,660	52,740	52,820	52,900	52,980	53,060	53,150	53,230	53,310	53,390	53,470	53,540	15
16	55,210	55,300	55,390	55,470	55,560	55,650	55,740	55,830	55,910	56,000	56,090	56,170	56,260	56,350	56,430	56,520	56,610	56,690	56,780	56,870	56,950	16
17	60,240	60,340	60,440	60,540	60,640	60,740	60,840	60,940	61,040	61,140	61,240	61,340	61,440	61,540	61,640	61,740	61,840	61,940	62,040	62,140	62,240	17
18	65,260	65,370	65,490	65,600	65,720	65,830	65,950	66,060	66,170	66,290	66,400	66,520	66,630	66,740	66,860	66,970	67,080	67,190	67,300	67,420	67,530	18
19	70,290	70,410	70,540	70,670	70,800	70,920	71,050	71,180	71,310	71,430	71,560	71,690	71,810	71,940	72,070	72,190	72,320	72,440	72,570	72,690	72,810	19
20	75,070	75,210	75,350	75,490	75,630	75,770	75,900	76,040	76,180	76,320	76,450	76,590	76,730	76,860	77,000	77,140	77,270	77,410	77,540	77,680	77,810	20
21	79,860	80,010	80,160	80,310	80,460	80,610	80,760	80,910	81,050	81,200	81,350	81,500	81,640	81,790	81,940	82,080	82,230	82,370	82,520	82,660	82,810	21
22	84,650	84,810	84,970	85,130	85,290	85,450	85,610	85,770	85,930	86,090	86,240	86,400	86,560	86,710	86,870	87,030	87,180	87,340	87,490	87,650	87,800	22
23	91,200	91,340	91,470	91,610	91,740	91,870	92,010	92,140	92,270	92,400	92,530	92,660	92,790	92,910	93,040	93,170	93,290	93,420	93,540	93,660	93,790	23
24	97,760	97,870	97,980	98,080	98,190	98,300	98,400	98,510	98,610	98,710	98,810	98,910	99,010	99,110	99,210	99,310	99,400	99,500	99,590	99,680	99,780	24
25	104,300	104,400	104,500	104,600	104,600	104,700	104,800	104,900	104,900	105,000	105,100	105,200	105,200	105,300	105,400	105,400	105,500	105,600	105,600	105,700	105,800	25
26	105,400	105,600	105,800	106,000	106,100	106,300	106,500	106,700	106,900	107,100	107,300	107,500	107,700	107,900	108,100	108,300	108,400	108,600	108,800	109,000	109,200	26
27	106,400	106,700	107,000	107,300	107,700	108,000	108,300	108,600	108,900	109,200	109,500	109,800	110,100	110,500	110,800	111,100	111,400	111,700	112,000	112,300	112,600	27
28	107,500	107,900	108,300	108,700	109,200	109,600	110,000	110,400	110,900	111,300	111,700	112,200	112,600	113,000	113,500	113,900	114,300	114,800	115,200	115,600	116,100	28

GATE ARRANGEMENT	HEADWATER ELEVATION																					GATE ARRANGEMENT
	814.0	814.1	814.2	814.3	814.4	814.5	814.6	814.7	814.8	814.9	815.0	815.1	815.2	815.3	815.4	815.5	815.6	815.7	815.8	815.9	816.0	
1	2,900	2,910	2,910	2,920	2,920	2,930	2,930	2,940	2,940	2,950	2,950	2,950	2,960	2,960	2,970	2,970						1
2	6,270	6,280	6,290	6,300	6,310	6,320	6,330	6,340	6,350	6,360	6,370	6,380	6,390	6,400	6,410	6,420	6,430	6,440	6,450	6,460	6,470	2
3	9,740	9,760	9,770	9,790	9,800	9,820	9,830	9,850	9,870	9,880	9,900	9,910	9,930	9,940	9,960	9,970	9,990	10,000	10,020	10,030	10,050	3
4	13,300	13,320	13,350	13,370	13,390	13,410	13,430	13,460	13,480	13,500	13,520	13,540	13,560	13,580	13,610	13,630	13,650	13,670	13,690	13,710	13,730	4
5	17,110	17,140	17,170	17,200	17,230	17,250	17,280	17,310	17,340	17,370	17,390	17,420	17,450	17,480	17,500	17,530	17,560	17,590	17,610	17,640	17,670	5
6	20,630	20,670	20,700	20,740	20,770	20,800	20,840	20,870	20,900	20,940	20,970	21,000	21,030	21,070	21,100	21,130	21,170	21,200	21,230	21,260	21,300	6
7	24,740	24,780	24,820	24,860	24,900	24,940	24,970	25,010	25,050	25,090	25,130	25,170	25,200	25,240	25,280	25,320	25,360	25,390	25,430	25,470	25,510	7
8	28,820	28,870	28,910	28,960	29,000	29,050	29,090	29,130	29,180	29,220	29,260	29,310	29,350	29,390	29,430	29,480	29,520	29,560	29,600	29,640	29,690	8
9	32,430	32,480	32,530	32,570	32,620	32,670	32,720	32,760	32,810	32,860	32,900	32,950	33,000	33,040	33,090	33,130	33,180	33,230	33,270	33,320	33,370	9
10	36,000	36,050	36,110	36,160	36,210	36,260	36,320	36,370	36,420	36,470	36,530	36,580	36,630	36,680	36,730	36,780	36,840	36,890	36,940	36,990	37,040	10
11	39,420	39,480	39,530	39,590	39,650	39,710	39,760	39,820	39,880	39,930	39,990	40,050	40,100	40,160	40,220	40,270	40,330	40,380	40,440	40,490	40,550	11
12	43,050	43,110	43,180	43,240	43,300	43,370	43,430	43,490	43,550	43,620	43,680	43,740	43,800	43,860	43,920	43,980	44,050	44,110	44,170	44,230	44,290	12
13	46,620	46,690	46,750	46,820	46,890	46,960	47,030	47,090	47,160	47,230	47,290	47,360	47,430	47,490	47,560	47,630	47,690	47,760	47,820	47,890	47,960	13
14	50,150	50,230	50,300	50,370	50,450	50,520	50,590	50,670	50,740	50,810	50,890	50,960	51,030	51,100	51,170	51,250	51,320	51,390	51,460	51,530	51,600	14
15	53,540	53,620	53,700	53,780	53,860	53,940	54,020	54,100	54,180	54,260	54,340	54,410	54,490	54,570	54,650	54,730	54,800	54,880	54,960	55,040	55,120	15
16	56,950	57,040	57,120	57,210	57,290	57,380	57,460	57,550	57,630	57,720	57,800	57,890	57,970	58,050	58,140	58,220	58,310	58,390	58,470	58,560	58,640	16
17	62,240	62,340	62,430	62,530	62,630	62,730	62,820	62,920	63,010	63,110	63,200	63,300	63,390	63,490	63,580	63,670	63,770	63,860	63,950	64,040	64,130	17
18	67,530	67,640	67,750	67,860	67,970	68,070	68,180	68,290	68,400	68,500	68,610	68,710	68,820	68,920	69,020	69,120	69,220	69,320	69,420	69,520	69,620	18
19	72,810	72,940	73,060	73,180	73,300	73,420	73,540	73,660	73,780	73,890	74,010	74,130	74,240	74,350	74,460	74,570	74,680	74,790	74,900	75,000	75,110	19
20	77,810	77,940	78,080	78,210	78,340	78,470	78,600	78,730	78,860	78,990	79,120	79,240	79,370	79,490	79,620	79,740	79,860	79,990	80,110	80,230	80,340	20
21	82,810	82,950	83,090	83,230	83,380	83,520	83,660	83,800	83,940	84,080	84,220	84,360	84,500	84,640	84,770	84,910	85,040	85,180	85,310	85,450	85,580	21
22	87,800	87,950	88,110	88,260	88,410	88,570	88,720	88,870	89,020	89,170	89,330	89,480	89,630	89,780	89,930	90,080	90,220	90,370	90,520	90,670	90,820	22
23	93,790	93,920	94,050	94,190	94,320	94,450	94,580	94,710	94,840	94,970	95,090	95,220	95,350	95,470	95,600	95,730	95,850	95,980	96,100	96,220	96,350	23
24	99,780	99,890	100,000	100,100	100,200	100,300	100,400	100,500	100,700	100,800	100,900	101,000	101,100	101,200	101,300	101,400	101,500	101,600	101,700	101,800	101,900	24
25	105,800	105,900	105,900	106,000	106,100	106,200	106,300	106,400	106,500	106,500	106,600	106,700	106,800	106,900	107,000	107,000	107,100	107,200	107,300	107,300	107,400	25
26	109,200	109,400	109,600	109,800	110,000	110,200	110,400	110,600	110,800	111,000	111,300	111,400	111,500	111,500	111,600	111,600	111,700	111,700	111,800	111,800	111,900	26
27	112,600	112,900	113,300	113,600	113,900	114,200	114,500	114,900	115,200	115,500	116,100	116,100	116,100	116,200	116,200	116,200	116,200	116,300	116,300	116,300	116,400	27
28	116,100	116,500	116,900	117,400	117,800	118,200	118,700	119,100	119,500	120,000	120,800	120,800	120,800	120,800	120,800	120,800	120,800	120,800	120,800	120,800	120,800	28

HEADWATER 812 to 816
TAILWATER 782.51 to 783.5

See special instruction for preventing gate overflow on page 2.

MAY 2008

TELLICO DAM
SPILLWAY DISCHARGE
IN CUBIC FEET PER SECOND

GATE ARRANGEMENT	HEADWATER ELEVATION																				GATE ARRANGEMENT
	816.0	816.1	816.2	816.3	816.4	816.5	816.6	816.7	816.8	816.9	817.0	817.1	817.2	817.3	817.4	817.5	817.6	817.7	817.8	817.9	818.0	
1																						1
2	6,470	6,470	6,480																			2
3	10,050	10,060	10,080	10,100	10,110	10,130	10,140	10,160	10,170	10,190	10,200											3
4	13,730	13,750	13,770	13,790	13,810	13,840	13,860	13,880	13,900	13,920	13,940	14,140	14,500	14,960	15,510	16,130	16,820	17,580				4
5	17,670	17,700	17,720	17,750	17,780	17,800	17,830	17,860	17,880	17,910	17,940	18,150	18,510	18,980	19,540	20,170	20,860	21,620	22,440	23,320	24,240	5
6	21,300	21,330	21,360	21,400	21,430	21,460	21,490	21,520	21,560	21,590	21,620	21,840	22,210	22,680	23,240	23,880	24,580	25,340	26,170	27,050	27,990	6
7	25,510	25,540	25,580	25,620	25,650	25,690	25,730	25,760	25,800	25,840	25,870	26,090	26,470	26,950	27,510	28,150	28,860	29,620	30,450	31,340	32,280	7
8	29,690	29,730	29,770	29,810	29,850	29,890	29,930	29,970	30,010	30,050	30,090	30,320	30,690	31,180	31,740	32,380	33,090	33,870	34,700	35,580	36,530	8
9	33,370	33,410	33,460	33,510	33,550	33,600	33,640	33,690	33,740	33,780	33,830	34,060	34,450	34,930	35,510	36,160	36,870	37,650	38,490	39,390	40,340	9
10	37,040	37,090	37,140	37,190	37,240	37,290	37,340	37,390	37,440	37,490	37,540	37,770	38,160	38,660	39,230	39,880	40,600	41,380	42,230	43,120	44,080	10
11	40,550	40,600	40,660	40,710	40,770	40,820	40,880	40,930	40,990	41,040	41,090	41,330	41,730	42,220	42,800	43,460	44,180	44,970	45,810	46,720	47,670	11
12	44,290	44,350	44,410	44,470	44,530	44,590	44,650	44,710	44,770	44,830	44,890	45,130	45,530	46,030	46,620	47,280	48,010	48,800	49,650	50,560	51,520	12
13	47,960	48,020	48,090	48,150	48,220	48,280	48,350	48,410	48,480	48,540	48,610	48,860	49,260	49,770	50,360	51,030	51,760	52,560	53,420	54,330	55,300	13
14	51,600	51,670	51,740	51,820	51,890	51,960	52,030	52,100	52,170	52,240	52,310	52,570	52,970	53,490	54,080	54,760	55,500	56,300	57,160	58,080	59,050	14
15	55,120	55,190	55,270	55,350	55,430	55,500	55,580	55,660	55,730	55,810	55,890	56,150	56,570	57,080	57,690	58,370	59,110	59,920	60,790	61,720	62,690	15
16	58,640	58,720	58,810	58,890	58,970	59,050	59,140	59,220	59,300	59,380	59,470	59,730	60,150	60,680	61,290	61,970	62,720	63,540	64,410	65,340	66,330	16
17	64,130	64,220	64,310	64,400	64,480	64,570	64,660	64,740	64,830	64,920	65,000	65,270	65,690	66,220	66,830	67,510	68,270	69,080	69,960	70,890	71,870	17
18	69,620	69,710	69,810	69,900	70,000	70,090	70,180	70,270	70,360	70,450	70,540	70,810	71,230	71,760	72,370	73,060	73,810	74,630	75,500	76,430	77,420	18
19	75,110	75,210	75,310	75,410	75,510	75,610	75,700	75,800	75,890	75,980	76,070	76,340	76,770	77,300	77,910	78,600	79,360	80,170	81,050	81,980	82,960	19
20	80,340	80,460	80,580	80,690	80,800	80,920	81,030	81,140	81,250	81,360	81,470	81,760	82,200	82,750	83,380	84,090	84,860	85,700	86,590	87,540	88,540	20
21	85,580	85,710	85,840	85,970	86,100	86,230	86,360	86,480	86,610	86,740	86,860	87,170	87,630	88,200	88,850	89,570	90,370	91,220	92,140	93,100	94,130	21
22	90,820	90,960	91,110	91,250	91,400	91,540	91,690	91,830	91,970	92,110	92,260	92,580	93,070	93,650	94,320	95,060	95,870	96,750	97,680	98,670	99,710	22
23	96,350	96,490	96,630	96,770	96,900	97,040	97,180	97,320	97,460	97,590	97,730	98,050	98,520	99,100	99,760	100,500	101,300	102,200	103,100	104,100	105,100	23
24	101,900	102,000	102,100	102,300	102,400	102,500	102,700	102,800	102,900	103,100	103,200	103,500	104,000	104,600	105,200	105,900	106,700	107,600	108,500	109,500	110,500	24
25	107,400	107,500	107,700	107,800	107,900	108,000	108,200	108,300	108,400	108,500	108,700	109,000	109,400	110,000	110,700	111,400	112,200	113,000	113,900	114,900	115,900	25
26	111,900	112,000	112,100	112,100	112,200	112,300	112,400	112,500	112,600	112,700	112,800	113,000	113,500	114,000	114,600	115,300	116,000	116,900	117,700	118,700	119,700	26
27	116,400	116,400	116,500	116,500	116,600	116,600	116,700	116,700	116,700	116,800	116,800	117,100	117,500	118,000	118,500	119,200	119,900	120,700	121,500	122,400	123,400	27
28	120,800	120,800	120,900	120,900	120,900	120,900	120,900	120,900	120,900	120,900	120,900	121,100	121,500	121,900	122,500	123,100	123,800	124,500	125,300	126,200	127,100	28

GATE ARRANGEMENT	HEADWATER ELEVATION																				GATE ARRANGEMENT
	818.0	818.1	818.2	818.3	818.4	818.5	818.6	818.7	818.8	818.9	819.0	819.1	819.2	819.3	819.4	819.5	819.6	819.7	819.8	819.9	820.0	
1																						1
2																						2
3																						3
4																						4
5	24,240	25,230	26,260	27,340	28,460																	5
6	27,990	28,970	30,010	31,090	32,230	33,410	34,630	35,900	37,210	38,570	39,960	41,400										6
7	32,280	33,270	34,310	35,400	36,530	37,720	38,940	40,220	41,530	42,890	44,290	45,730	47,210	48,730	50,300	51,900	53,530	55,210	56,920			7
8	36,530	37,520	38,560	39,650	40,790	41,980	43,210	44,480	45,800	47,160	48,570	50,010	51,490	53,020	54,580	56,180	57,820	59,500	61,220	62,970	64,760	8
9	40,340	41,340	42,390	43,490	44,640	45,830	47,070	48,350	49,680	51,050	52,460	53,910	55,400	56,930	58,510	60,120	61,770	63,450	65,180	66,940	68,740	9
10	44,080	45,080	46,130	47,230	48,380	49,580	50,820	52,110	53,430	54,800	56,220	57,670	59,170	60,700	62,270	63,890	65,540	67,230	68,950	70,720	72,520	10
11	47,670	48,680	49,740	50,850	52,000	53,200	54,440	55,730	57,070	58,440	59,860	61,320	62,820	64,350	65,930	67,550	69,210	70,900	72,630	74,400	76,200	11
12	51,520	52,530	53,600	54,710	55,870	57,070	58,320	59,620	60,960	62,340	63,760	65,220	66,730	68,270	69,860	71,480	73,140	74,840	76,570	78,350	80,160	12
13	55,300	56,320	57,390	58,500	59,670	60,880	62,140	63,440	64,780	66,170	67,600	69,070	70,580	72,130	73,720	75,340	77,010	78,720	80,460	82,240	84,050	13
14	59,050	60,080	61,150	62,280	63,450	64,660	65,930	67,230	68,580	69,970	71,410	72,880	74,400	75,950	77,550	79,180	80,850	82,560	84,310	86,100	87,920	14
15	62,690	63,730	64,810	65,940	67,110	68,340	69,600	70,920	72,270	73,670	75,110	76,590	78,110	79,670	81,270	82,910	84,590	86,310	88,060	89,850	91,680	15
16	66,330	67,360	68,450	69,580	70,760	71,990	73,260	74,580	75,940	77,350	78,790	80,280	81,800	83,370	84,980	86,620	88,300	90,020	91,780	93,580	95,410	16
17	71,870	72,910	73,990	75,120	76,310	77,530	78,800	80,120	81,480	82,880	84,320	85,800	87,330	88,890	90,490	92,130	93,810	95,530	97,290	99,080	100,900	17
18	77,420	78,450	79,530	80,670	81,850	83,070	84,340	85,650	87,010	88,410	89,850	91,330	92,850	94,410	96,010	97,650	99,330	101,000	102,800	104,600	106,400	18
19	82,960	83,990	85,080	86,210	87,390	88,610	89,880	91,190	92,540	93,940	95,380	96,860	98,370	99,930	101,500	103,200	104,800	106,500	108,300	110,100	111,900	19
20	88,540	89,600	90,700	91,850	93,050	94,300	95,590	96,920	98,290	99,710	101,200	102,700	104,200	105,800	107,400	109,100	110,800	112,500	114,300	116,100	117,900	20
21	94,130	95,200	96,330	97,500	98,720	99,980	101,300	102,600	104,000	105,500	107,000	108,500	110,000	111,600	113,300	115,000	116,700	118,400	120,200	122,100	123,900	21
22	99,710	100,800	102,000	103,100	104,400	105,700	107,000	108,400	109,800	111,300	112,800	114,300	115,900	117,500	119,200	120,900	122,600	124,400	126,200	128,100	129,900	22
23	105,100	106,200	107,400	108,600	109,800	111,100	112,400	113,800	115,300	116,700	118,200	119,800	121,400	123,000	124,700	126,400	128,100	129,900	131,700	133,600	135,500	23
24	110,500	111,600	112,800	114,000	115,200	116,500	117,900	119,300	120,700	122,200	123,700	125,300	126,900	128,500	130,200	131,900	133,600	135,400	137,300	139,100	141,000	24
25	115,900	117,000	118,200	119,400	120,700	122,000	123,300	124,700	126,200	127,700	129,200	130,700	132,300	134,000	135,700	137,400	139,200	141,000	142,800	144,700	146,600	25
26	119,700	120,800	122,000	123,200	124,500	125,800	127,200	128,600	130,000	131,500	133,100	134,700	136,300	137,900	139,600	141,400	143,100	145,000	146,800	148,700	150,600	26
27	123,400	124,500	125,700	127,000	128,300	129,600	131,000	132,400	133,900	135,400	137,000	138,600	140,200	141,900	143,600	145,300	147,100	149,000	150,800	152,700	154,700	27
28	127,100	128,300	129,500	130,800	132,100	133,400	134,800	136,300	137,800	139,300	140,900	142,500	144,100	145,800	147,500	149,300	151,100	153,000	154,800	156,800	158,700	28

MAY 2008

See special instruction for preventing gate overflow on page 2.

HEADWATER 816 to 820
TAILWATER 782.51 to 783.5

TELLICO DAM
SPILLWAY DISCHARGE
IN CUBIC FEET PER SECOND

GATE ARRANGEMENT	HEADWATER ELEVATION																				GATE ARRANGEMENT
	800.0	800.1	800.2	800.3	800.4	800.5	800.6	800.7	800.8	800.9	801.0	801.1	801.2	801.3	801.4	801.5	801.6	801.7	801.8	801.9	802.0	
1	2,090	2,090	2,100	2,110	2,110	2,120	2,120	2,130	2,140	2,140	2,150	2,160	2,160	2,170	2,180	2,180	2,190	2,190	2,200	2,210	2,210	1
2	4,500	4,510	4,520	4,540	4,550	4,570	4,580	4,590	4,610	4,620	4,630	4,650	4,660	4,670	4,690	4,700	4,720	4,730	4,740	4,760	4,770	2
3	6,980	7,000	7,030	7,050	7,070	7,090	7,110	7,130	7,160	7,180	7,200	7,220	7,240	7,260	7,280	7,300	7,320	7,340	7,370	7,390	7,410	3
4	9,420	9,440	9,470	9,500	9,530	9,560	9,590	9,620	9,640	9,670	9,700	9,730	9,760	9,780	9,810	9,840	9,870	9,900	9,930	9,950	9,980	4
5	12,160	12,190	12,230	12,270	12,310	12,340	12,380	12,420	12,460	12,490	12,530	12,570	12,600	12,640	12,680	12,720	12,750	12,790	12,830	12,860	12,900	5
6	14,740	14,790	14,830	14,870	14,920	14,960	15,010	15,050	15,090	15,140	15,180	15,230	15,270	15,310	15,360	15,400	15,450	15,490	15,530	15,580	15,620	6
7	17,640	17,690	17,750	17,800	17,860	17,910	17,960	18,020	18,070	18,130	18,180	18,230	18,290	18,340	18,400	18,450	18,500	18,560	18,610	18,660	18,710	7
8	20,500	20,570	20,630	20,690	20,760	20,820	20,890	20,950	21,010	21,080	21,140	21,200	21,260	21,330	21,390	21,450	21,520	21,580	21,640	21,700	21,770	8
9	23,520	23,590	23,660	23,720	23,790	23,860	23,930	24,000	24,070	24,140	24,210	24,280	24,350	24,410	24,480	24,550	24,620	24,690	24,760	24,820	24,890	9
10	26,540	26,610	26,690	26,760	26,840	26,910	26,990	27,060	27,130	27,210	27,280	27,350	27,430	27,500	27,570	27,650	27,720	27,790	27,870	27,940	28,010	10
11	29,560	29,640	29,720	29,800	29,880	29,960	30,030	30,110	30,190	30,270	30,350	30,430	30,500	30,580	30,660	30,740	30,810	30,890	30,970	31,040	31,120	11
12	32,340	32,430	32,510	32,600	32,680	32,770	32,850	32,940	33,020	33,100	33,190	33,270	33,360	33,440	33,520	33,610	33,690	33,770	33,860	33,940	34,020	12
13	35,080	35,170	35,260	35,350	35,440	35,530	35,620	35,710	35,800	35,900	35,990	36,080	36,160	36,250	36,340	36,430	36,520	36,610	36,700	36,790	36,880	13
14	37,750	37,850	37,950	38,050	38,140	38,240	38,340	38,430	38,530	38,630	38,720	38,820	38,920	39,010	39,110	39,200	39,300	39,390	39,490	39,580	39,670	14
15	40,400	40,510	40,610	40,710	40,820	40,920	41,020	41,130	41,230	41,330	41,430	41,530	41,630	41,730	41,830	41,940	42,040	42,140	42,230	42,330	42,430	15
16	42,960	43,070	43,180	43,290	43,400	43,510	43,620	43,720	43,830	43,940	44,050	44,150	44,260	44,370	44,480	44,580	44,690	44,790	44,900	45,000	45,110	16
17	46,940	47,060	47,170	47,290	47,400	47,520	47,630	47,750	47,860	47,970	48,090	48,200	48,310	48,420	48,530	48,640	48,760	48,870	48,980	49,090	49,200	17
18	50,920	51,040	51,170	51,290	51,410	51,530	51,650	51,770	51,890	52,010	52,120	52,240	52,360	52,480	52,590	52,710	52,820	52,940	53,050	53,170	53,280	18
19	54,900	55,030	55,160	55,290	55,410	55,540	55,670	55,790	55,920	56,040	56,160	56,280	56,410	56,530	56,650	56,770	56,890	57,010	57,130	57,250	57,370	19
20	56,480	56,690	56,900	57,110	57,310	57,520	57,730	57,930	58,140	58,350	58,550	58,760	58,960	59,170	59,370	59,580	59,780	59,990	60,200	60,400	60,610	20
21	58,070	58,350	58,640	58,930	59,210	59,500	59,790	60,080	60,370	60,650	60,940	61,230	61,520	61,810	62,100	62,390	62,680	62,970	63,260	63,550	63,840	21
22	59,650	60,010	60,380	60,750	61,110	61,480	61,850	62,220	62,590	62,960	63,330	63,700	64,080	64,450	64,820	65,200	65,570	65,950	66,320	66,700	67,080	22
23	59,650	60,010	60,380	60,750	61,110	61,480	61,850	62,220	62,590	62,960	63,330	63,700	64,080	64,450	64,820	65,200	65,570	65,950	66,320	66,700	67,080	23
24	59,650	60,010	60,380	60,750	61,110	61,480	61,850	62,220	62,590	62,960	63,330	63,700	64,080	64,450	64,820	65,200	65,570	65,950	66,320	66,700	67,080	24
25	59,650	60,010	60,380	60,750	61,110	61,480	61,850	62,220	62,590	62,960	63,330	63,700	64,080	64,450	64,820	65,200	65,570	65,950	66,320	66,700	67,080	25
26	59,650	60,010	60,380	60,750	61,110	61,480	61,850	62,220	62,590	62,960	63,330	63,700	64,080	64,450	64,820	65,200	65,570	65,950	66,320	66,700	67,080	26
27	59,650	60,010	60,380	60,750	61,110	61,480	61,850	62,220	62,590	62,960	63,330	63,700	64,080	64,450	64,820	65,200	65,570	65,950	66,320	66,700	67,080	27
28	59,650	60,010	60,380	60,750	61,110	61,480	61,850	62,220	62,590	62,960	63,330	63,700	64,080	64,450	64,820	65,200	65,570	65,950	66,320	66,700	67,080	28

GATE ARRANGEMENT	HEADWATER ELEVATION																				GATE ARRANGEMENT
	802.0	802.1	802.2	802.3	802.4	802.5	802.6	802.7	802.8	802.9	803.0	803.1	803.2	803.3	803.4	803.5	803.6	803.7	803.8	803.9	804.0	
1	2,210	2,220	2,220	2,230	2,240	2,240	2,250	2,260	2,260	2,270	2,270	2,280	2,290	2,290	2,300	2,300	2,310	2,310	2,320	2,330	2,330	1
2	4,770	4,780	4,790	4,810	4,820	4,830	4,850	4,860	4,870	4,890	4,900	4,910	4,920	4,940	4,950	4,960	4,980	4,990	5,000	5,010	5,030	2
3	7,410	7,430	7,450	7,470	7,490	7,510	7,530	7,550	7,570	7,590	7,610	7,630	7,650	7,670	7,690	7,710	7,730	7,750	7,770	7,790	7,810	3
4	9,980	10,010	10,040	10,070	10,090	10,120	10,150	10,180	10,200	10,230	10,260	10,290	10,310	10,340	10,370	10,400	10,420	10,450	10,480	10,510	10,530	4
5	12,900	12,940	12,970	13,010	13,050	13,090	13,120	13,160	13,190	13,230	13,270	13,300	13,340	13,380	13,410	13,450	13,480	13,520	13,550	13,590	13,620	5
6	15,620	15,660	15,710	15,750	15,790	15,840	15,880	15,920	15,970	16,010	16,050	16,090	16,140	16,180	16,220	16,260	16,310	16,350	16,390	16,430	16,470	6
7	18,710	18,770	18,820	18,870	18,920	18,980	19,030	19,080	19,130	19,180	19,230	19,290	19,340	19,390	19,440	19,490	19,540	19,590	19,640	19,680	19,730	7
8	21,770	21,830	21,890	21,950	22,010	22,080	22,140	22,200	22,260	22,320	22,380	22,440	22,500	22,560	22,620	22,680	22,740	22,800	22,860	22,920	22,980	8
9	24,890	24,960	25,030	25,090	25,160	25,230	25,300	25,360	25,430	25,490	25,560	25,630	25,690	25,760	25,820	25,890	25,950	26,020	26,080	26,150	26,210	9
10	28,010	28,080	28,160	28,230	28,300	28,370	28,440	28,510	28,580	28,650	28,730	28,800	28,870	28,940	29,010	29,080	29,140	29,210	29,280	29,350	29,420	10
11	31,120	31,200	31,270	31,350	31,420	31,500	31,570	31,650	31,720	31,800	31,870	31,950	32,020	32,100	32,170	32,240	32,320	32,390	32,460	32,530	32,610	11
12	34,020	34,100	34,180	34,270	34,350	34,430	34,510	34,590	34,670	34,750	34,830	34,910	34,990	35,070	35,150	35,230	35,310	35,390	35,470	35,550	35,620	12
13	36,880	36,960	37,050	37,140	37,230	37,310	37,400	37,490	37,570	37,660	37,750	37,830	37,920	38,000	38,090	38,170	38,260	38,340	38,430	38,510	38,600	13
14	39,670	39,770	39,860	39,960	40,050	40,140	40,240	40,330	40,420	40,510	40,600	40,700	40,790	40,880	40,970	41,060	41,150	41,240	41,330	41,420	41,510	14
15	42,430	42,530	42,630	42,730	42,830	42,930	43,020	43,120	43,220	43,320	43,410	43,510	43,610	43,700	43,800	43,900	43,990	44,090	44,180	44,280	44,380	15
16	45,110	45,210	45,320	45,420	45,530	45,630	45,730	45,840	45,940	46,040	46,150	46,250	46,350	46,450	46,550	46,660	46,760	46,860	46,960	47,060	47,160	16
17	49,200	49,310	49,410	49,520	49,630	49,740	49,850	49,960	50,070	50,180	50,290	50,390	50,500	50,610	50,720	50,830	50,940	51,040	51,150	51,260	51,370	17
18	53,280	53,400	53,510	53,630	53,740	53,850	53,970	54,080	54,200	54,310	54,420	54,540	54,650	54,770	54,880	55,000	55,110	55,230	55,340	55,460	55,580	18
19	57,370	57,490	57,610	57,730	57,850	57,970	58,090	58,210	58,320	58,440	58,560	58,680	58,800	58,930	59,050	59,170	59,290	59,410	59,540	59,660	59,780	19
20	60,610	60,810	61,020	61,220	61,430	61,630	61,840	62,050	62,250	62,460	62,670	62,880	63,090	63,290	63,500	63,710	63,920	64,130	64,340	64,560	64,770	20
21	63,840	64,130	64,430	64,720	65,010	65,300	65,600	65,890	66,180	66,480	66,770	67,070	67,370	67,660	67,960	68,260	68,550	68,850	69,150	69,450	69,750	21
22	67,080	67,460	67,830	68,210	68,590	68,970	69,350	69,730	70,110	70,500	70,880	71,260	71,650	72,030	72,420	72,800	73,190	73,570	73,960	74,350	74,740	22
23	67,080	67,460	67,830	68,210	68,590	68,970	69,350	69,730	70,110	70,500	70,880	71,260	71,650	72,030	72,420	72,800	73,190	73,570	73,960	74,350	74,740	23
24	67,080	67,460	67,830	68,210	68,590	68,970	69,350	69,730	70,110	70,500	70,880	71,260	71,650	72,030	72,420	72,800	73,190	73,570	73,960	74,350	74,740	24
25	67,080	67,460	67,830	68,210	68,590	68,970	69,350	69,730	70,110	70,500	70,880	71,260	71,650	72,030	72,420	72,800	73,190	73,570	73,960	74,350	74,740	25
26	67,080	67,460	67,830	68,210	68,590	68,970	69,350	69,730	70,110	70,500	70,880	71,260	71,650	72,030	72,420	72,800	73,190	73,570	73,960	74,350	74,740	26
27	67,080	67,460	67,830	68,210	68,590	68,970	69,350	69,730	70,110	70,500	70,880	71,260	71,650	72,030	72,420	72,800	73,190	73,570	73,960	74,350	74,740	27
28	67,080	67,460	67,830	68,210	68,590	68,970	69,350	69,730	70,110	70,500	70,880	71,260	71,650	72,030	72,420	72,800	73,190	73,570	73,960	74,350	74,740	28

HEADWATER 800 to 804
TAILWATER 783.51 to 784.5

MAY 2008

TELLICO DAM
SPILLWAY DISCHARGE
IN CUBIC FEET PER SECOND

GATE ARRANGEMENT	HEADWATER ELEVATION																				GATE ARRANGEMENT
	804.0	804.1	804.2	804.3	804.4	804.5	804.6	804.7	804.8	804.9	805.0	805.1	805.2	805.3	805.4	805.5	805.6	805.7	805.8	805.9	806.0	
1	2,330	2,340	2,340	2,350	2,360	2,360	2,370	2,370	2,380	2,380	2,390	2,400	2,400	2,410	2,410	2,420	2,420	2,430	2,430	2,440	2,450	1
2	5,030	5,040	5,050	5,060	5,080	5,090	5,100	5,110	5,130	5,140	5,150	5,160	5,170	5,190	5,200	5,210	5,220	5,240	5,250	5,260	5,270	2
3	7,810	7,830	7,850	7,870	7,880	7,900	7,920	7,940	7,960	7,980	8,000	8,020	8,040	8,060	8,080	8,090	8,110	8,130	8,150	8,170	8,190	3
4	10,530	10,560	10,590	10,610	10,640	10,670	10,700	10,720	10,750	10,780	10,800	10,830	10,860	10,880	10,910	10,940	10,960	10,990	11,020	11,040	11,070	4
5	13,620	13,660	13,690	13,730	13,760	13,800	13,830	13,870	13,900	13,940	13,970	14,000	14,040	14,070	14,100	14,140	14,170	14,200	14,240	14,270	14,300	5
6	16,470	16,510	16,560	16,600	16,640	16,680	16,720	16,760	16,800	16,840	16,880	16,920	16,960	17,000	17,040	17,080	17,120	17,160	17,200	17,240	17,280	6
7	19,730	19,780	19,830	19,880	19,920	19,970	20,020	20,060	20,110	20,160	20,200	20,250	20,290	20,340	20,380	20,430	20,470	20,520	20,560	20,610	20,650	7
8	22,980	23,040	23,100	23,150	23,210	23,270	23,330	23,380	23,440	23,500	23,550	23,610	23,660	23,720	23,780	23,830	23,890	23,940	24,000	24,050	24,100	8
9	26,210	26,270	26,340	26,400	26,460	26,520	26,590	26,650	26,710	26,770	26,830	26,890	26,950	27,020	27,080	27,140	27,200	27,260	27,320	27,370	27,430	9
10	29,420	29,490	29,560	29,620	29,690	29,760	29,820	29,890	29,960	30,020	30,090	30,150	30,220	30,290	30,350	30,420	30,480	30,540	30,610	30,670	30,740	10
11	32,610	32,680	32,750	32,820	32,890	32,960	33,030	33,100	33,170	33,240	33,310	33,380	33,450	33,520	33,590	33,660	33,730	33,790	33,860	33,930	34,000	11
12	35,620	35,700	35,780	35,860	35,940	36,010	36,090	36,170	36,240	36,320	36,390	36,470	36,550	36,620	36,700	36,770	36,850	36,920	37,000	37,070	37,140	12
13	38,600	38,680	38,760	38,850	38,930	39,010	39,100	39,180	39,260	39,350	39,430	39,510	39,590	39,670	39,750	39,840	39,920	40,000	40,080	40,160	40,240	13
14	41,510	41,600	41,690	41,780	41,870	41,960	42,050	42,140	42,230	42,320	42,410	42,490	42,580	42,670	42,760	42,850	42,930	43,020	43,110	43,190	43,280	14
15	44,380	44,470	44,570	44,670	44,760	44,860	44,950	45,050	45,140	45,240	45,340	45,430	45,530	45,620	45,710	45,810	45,900	46,000	46,090	46,190	46,280	15
16	47,160	47,270	47,370	47,470	47,580	47,680	47,780	47,890	47,990	48,090	48,190	48,290	48,400	48,500	48,600	48,700	48,800	48,900	49,000	49,110	49,210	16
17	51,370	51,480	51,590	51,700	51,810	51,920	52,040	52,150	52,260	52,370	52,480	52,590	52,700	52,820	52,930	53,040	53,150	53,260	53,370	53,490	53,600	17
18	55,580	55,690	55,810	55,930	56,050	56,170	56,290	56,410	56,530	56,650	56,770	56,890	57,010	57,130	57,260	57,380	57,500	57,620	57,740	57,870	57,990	18
19	59,780	59,910	60,030	60,160	60,290	60,410	60,540	60,670	60,800	60,930	61,060	61,190	61,320	61,450	61,580	61,710	61,850	61,980	62,110	62,250	62,380	19
20	64,770	64,930	65,090	65,250	65,400	65,560	65,720	65,880	66,040	66,190	66,350	66,510	66,670	66,830	66,980	67,140	67,300	67,460	67,620	67,780	67,930	20
21	69,750	69,960	70,150	70,330	70,520	70,710	70,900	71,080	71,270	71,460	71,640	71,830	72,020	72,200	72,390	72,570	72,750	72,940	73,120	73,300	73,490	21
22	74,740	74,980	75,200	75,420	75,640	75,860	76,080	76,290	76,510	76,720	76,940	77,150	77,360	77,580	77,790	78,000	78,210	78,420	78,630	78,830	79,040	22
23	74,740	75,030	75,310	75,580	75,860	76,130	76,410	76,680	76,960	77,230	77,510	77,780	78,050	78,330	78,600	78,870	79,140	79,420	79,690	79,960	80,230	23
24	74,740	75,080	75,410	75,740	76,080	76,410	76,740	77,080	77,410	77,740	78,080	78,410	78,740	79,080	79,410	79,750	80,080	80,410	80,750	81,080	81,420	24
25	74,740	75,130	75,510	75,900	76,290	76,680	77,080	77,470	77,860	78,250	78,650	79,040	79,430	79,830	80,220	80,620	81,020	81,410	81,810	82,210	82,610	25
26	74,740	75,130	75,510	75,900	76,290	76,680	77,080	77,470	77,860	78,250	78,650	79,040	79,430	79,830	80,220	80,620	81,020	81,410	81,810	82,210	82,610	26
27	74,740	75,130	75,510	75,900	76,290	76,680	77,080	77,470	77,860	78,250	78,650	79,040	79,430	79,830	80,220	80,620	81,020	81,410	81,810	82,210	82,610	27
28	74,740	75,130	75,510	75,900	76,290	76,680	77,080	77,470	77,860	78,250	78,650	79,040	79,430	79,830	80,220	80,620	81,020	81,410	81,810	82,210	82,610	28

GATE ARRANGEMENT	HEADWATER ELEVATION																				GATE ARRANGEMENT
	806.0	806.1	806.2	806.3	806.4	806.5	806.6	806.7	806.8	806.9	807.0	807.1	807.2	807.3	807.4	807.5	807.6	807.7	807.8	807.9	808.0	
1	2,450	2,450	2,460	2,460	2,470	2,470	2,480	2,480	2,490	2,500	2,500	2,510	2,510	2,520	2,520	2,530	2,530	2,540	2,540	2,550	2,550	1
2	5,270	5,280	5,300	5,310	5,320	5,330	5,340	5,350	5,370	5,380	5,390	5,400	5,410	5,430	5,440	5,450	5,460	5,470	5,480	5,490	5,510	2
3	8,190	8,210	8,230	8,240	8,260	8,280	8,300	8,320	8,340	8,350	8,370	8,390	8,410	8,430	8,440	8,460	8,480	8,500	8,520	8,530	8,550	3
4	11,070	11,100	11,120	11,150	11,180	11,200	11,230	11,250	11,280	11,310	11,330	11,360	11,380	11,410	11,440	11,460	11,490	11,510	11,540	11,560	11,590	4
5	14,300	14,340	14,370	14,400	14,440	14,470	14,500	14,530	14,570	14,600	14,630	14,660	14,690	14,730	14,760	14,790	14,820	14,850	14,880	14,920	14,950	5
6	17,280	17,320	17,350	17,390	17,430	17,470	17,510	17,550	17,580	17,620	17,660	17,700	17,740	17,770	17,810	17,850	17,890	17,920	17,960	18,000	18,040	6
7	20,650	20,700	20,740	20,780	20,830	20,870	20,920	20,960	21,000	21,050	21,090	21,130	21,180	21,220	21,270	21,310	21,350	21,400	21,440	21,490	21,530	7
8	24,100	24,160	24,210	24,270	24,320	24,370	24,430	24,480	24,530	24,590	24,640	24,690	24,750	24,800	24,850	24,900	24,950	25,010	25,060	25,110	25,160	8
9	27,430	27,490	27,550	27,610	27,670	27,730	27,790	27,850	27,900	27,960	28,020	28,080	28,140	28,190	28,250	28,310	28,370	28,420	28,480	28,540	28,590	9
10	30,740	30,800	30,860	30,930	30,990	31,050	31,120	31,180	31,240	31,310	31,370	31,430	31,490	31,560	31,620	31,680	31,740	31,810	31,870	31,930	31,990	10
11	34,000	34,070	34,130	34,200	34,270	34,340	34,400	34,470	34,540	34,600	34,670	34,740	34,800	34,870	34,940	35,000	35,070	35,130	35,200	35,270	35,330	11
12	37,140	37,220	37,290	37,370	37,440	37,510	37,590	37,660	37,730	37,810	37,880	37,950	38,030	38,100	38,170	38,250	38,320	38,390	38,460	38,540	38,610	12
13	40,240	40,320	40,400	40,480	40,560	40,640	40,720	40,800	40,880	40,960	41,040	41,120	41,200	41,280	41,360	41,440	41,520	41,600	41,680	41,760	41,830	13
14	43,280	43,370	43,450	43,540	43,630	43,710	43,800	43,890	43,970	44,060	44,150	44,230	44,320	44,400	44,490	44,580	44,660	44,750	44,830	44,920	45,000	14
15	46,280	46,370	46,470	46,560	46,650	46,740	46,840	46,930	47,020	47,110	47,210	47,300	47,390	47,480	47,570	47,660	47,750	47,850	47,940	48,030	48,120	15
16	49,210	49,310	49,410	49,510	49,610	49,710	49,810	49,900	50,000	50,100	50,200	50,300	50,400	50,500	50,600	50,690	50,790	50,890	50,990	51,080	51,180	16
17	53,600	53,710	53,820	53,930	54,040	54,150	54,270	54,380	54,490	54,600	54,710	54,820	54,930	55,040	55,150	55,260	55,370	55,480	55,590	55,700	55,810	17
18	57,990	58,110	58,230	58,360	58,480	58,600	58,730	58,850	58,970	59,090	59,220	59,340	59,460	59,580	59,710	59,830	59,950	60,070	60,190	60,310	60,430	18
19	62,380	62,510	62,650	62,780	62,920	63,050	63,190	63,320	63,450	63,590	63,720	63,860	63,990	64,130	64,260	64,390	64,530	64,660	64,790	64,930	65,060	19
20	67,930	68,050	68,170	68,290	68,410	68,520	68,640	68,760	68,870	68,990	69,100	69,220	69,330	69,450	69,560	69,670	69,790	69,900	70,010	70,120	70,230	20
21	73,490	73,590	73,690	73,790	73,900	74,000	74,090	74,190	74,290	74,390	74,480	74,580	74,670	74,770	74,860	74,950	75,040	75,130	75,220	75,310	75,400	21
22	79,040	79,130	79,220	79,300	79,380	79,470	79,550	79,630	79,710	79,790	79,860	79,940	80,010	80,090	80,160	80,230	80,300	80,370	80,440	80,500	80,570	22
23	80,230	80,420	80,610	80,800	80,990	81,180	81,370	81,560	81,740	81,930	82,110	82,300	82,480	82,670	82,850	83,030	83,220	83,400	83,580	83,760	83,940	23
24	81,420	81,710	82,010	82,300	82,600	82,890	83,190	83,480	83,780	84,070	84,370	84,660	84,950	85,250	85,540	85,840	86,130	86,420	86,720	87,010	87,310	24
25	82,610	83,010	83,400	83,800	84,200	84,610	85,010	85,410	85,810	86,210	86,620	87,020	87,420	87,830	88,230	88,640	89,040	89,450	89,860	90,270	90,670	25
26	82,610	83,010	83,400	83,800	84,200	84,610	85,010	85,410	85,810	86,210	86,620	87,020	87,420	87,830	88,230	88,640	89,040	89,450	89,860	90,270	90,670	26
27	82,610	83,010	83,400	83,800	84,200	84,610	85,010	85,410	85,810	86,210	86,620	87,020	87,420	87,830	88,230	88,640	89,040	89,450	89,860	90,270	90,670	27
28	82,610	83,010	83,400	83,800	84,200	84,610	85,010	85,410	85,810	86,210	86,620	87,020	87,420	87,830	88,230	88,640	89,040	89,450	89,860	90,270	90,670	28

MAY 2008

HEADWATER 804 to 808
TAILWATER 783.51 to 784.5

TELLICO DAM
SPILLWAY DISCHARGE
IN CUBIC FEET PER SECOND

HEADWATER ELEVATION

GATE ARRANGEMENT	808.0	808.1	808.2	808.3	808.4	808.5	808.6	808.7	808.8	808.9	809.0	809.1	809.2	809.3	809.4	809.5	809.6	809.7	809.8	809.9	810.0	GATE ARRANGEMENT
1	2,550	2,560	2,570	2,570	2,580	2,580	2,590	2,590	2,600	2,600	2,610	2,610	2,620	2,620	2,630	2,630	2,640	2,640	2,650	2,650	2,660	1
2	5,510	5,520	5,530	5,540	5,550	5,560	5,570	5,590	5,600	5,610	5,620	5,630	5,640	5,650	5,660	5,680	5,690	5,700	5,710	5,720	5,730	2
3	8,550	8,570	8,590	8,610	8,620	8,640	8,660	8,680	8,690	8,710	8,730	8,750	8,760	8,780	8,800	8,820	8,830	8,850	8,870	8,880	8,900	3
4	11,590	11,620	11,640	11,670	11,690	11,720	11,740	11,770	11,790	11,820	11,840	11,870	11,890	11,920	11,940	11,970	11,990	12,020	12,040	12,070	12,090	4
5	14,950	14,980	15,010	15,040	15,070	15,100	15,140	15,170	15,200	15,230	15,260	15,290	15,320	15,350	15,380	15,410	15,440	15,470	15,510	15,540	15,570	5
6	18,040	18,070	18,110	18,150	18,180	18,220	18,260	18,290	18,330	18,370	18,400	18,440	18,470	18,510	18,550	18,580	18,620	18,650	18,690	18,720	18,760	6
7	21,530	21,580	21,620	21,660	21,710	21,750	21,800	21,840	21,890	21,930	21,980	22,030	22,070	22,120	22,160	22,210	22,250	22,300	22,340	22,390	22,430	7
8	25,160	25,210	25,270	25,320	25,370	25,420	25,470	25,520	25,570	25,630	25,680	25,730	25,780	25,830	25,880	25,930	25,980	26,030	26,080	26,130	26,180	8
9	28,590	28,650	28,710	28,770	28,820	28,880	28,940	28,990	29,050	29,110	29,170	29,220	29,280	29,340	29,390	29,450	29,500	29,560	29,620	29,670	29,730	9
10	31,990	32,050	32,110	32,180	32,240	32,300	32,360	32,420	32,480	32,550	32,610	32,670	32,730	32,790	32,850	32,910	32,970	33,040	33,100	33,160	33,220	10
11	35,330	35,400	35,470	35,530	35,600	35,660	35,730	35,800	35,860	35,930	35,990	36,060	36,130	36,190	36,260	36,320	36,390	36,450	36,520	36,580	36,650	11
12	38,610	38,680	38,760	38,830	38,900	38,970	39,050	39,120	39,190	39,260	39,340	39,410	39,480	39,550	39,620	39,700	39,770	39,840	39,910	39,980	40,060	12
13	41,830	41,910	41,990	42,070	42,150	42,230	42,310	42,390	42,470	42,550	42,620	42,700	42,780	42,860	42,940	43,020	43,090	43,170	43,250	43,330	43,410	13
14	45,000	45,090	45,180	45,260	45,350	45,430	45,520	45,600	45,690	45,780	45,860	45,950	46,030	46,120	46,200	46,290	46,370	46,460	46,540	46,630	46,710	14
15	48,120	48,210	48,300	48,390	48,490	48,580	48,670	48,760	48,850	48,950	49,040	49,130	49,220	49,310	49,400	49,490	49,580	49,670	49,760	49,850	49,940	15
16	51,180	51,280	51,380	51,480	51,580	51,670	51,770	51,870	51,970	52,070	52,170	52,260	52,360	52,460	52,560	52,650	52,750	52,850	52,940	53,040	53,130	16
17	55,810	55,920	56,030	56,140	56,250	56,360	56,460	56,570	56,680	56,790	56,900	57,010	57,120	57,220	57,330	57,440	57,550	57,650	57,760	57,870	57,970	17
18	60,430	60,550	60,680	60,800	60,920	61,040	61,160	61,280	61,400	61,510	61,630	61,750	61,870	61,990	62,110	62,220	62,340	62,460	62,580	62,690	62,810	18
19	65,060	65,190	65,320	65,460	65,590	65,720	65,850	65,980	66,110	66,240	66,370	66,500	66,630	66,750	66,880	67,010	67,140	67,270	67,390	67,520	67,650	19
20	70,230	70,360	70,480	70,610	70,730	70,860	70,980	71,110	71,230	71,360	71,480	71,600	71,720	71,840	71,960	72,080	72,210	72,330	72,440	72,560	72,680	20
21	75,400	75,520	75,640	75,760	75,880	76,000	76,120	76,240	76,360	76,470	76,590	76,700	76,820	76,930	77,050	77,160	77,270	77,380	77,490	77,610	77,720	21
22	80,570	80,690	80,800	80,920	81,030	81,140	81,260	81,370	81,480	81,590	81,700	81,810	81,910	82,020	82,130	82,230	82,340	82,440	82,540	82,650	82,750	22
23	83,940	84,150	84,360	84,580	84,790	85,000	85,210	85,430	85,640	85,850	86,060	86,270	86,480	86,690	86,900	87,100	87,310	87,520	87,730	87,930	88,140	23
24	87,310	87,620	87,930	88,240	88,550	88,860	89,170	89,480	89,790	90,110	90,420	90,730	91,040	91,350	91,660	91,970	92,290	92,600	92,910	93,220	93,530	24
25	90,670	91,080	91,490	91,900	92,310	92,720	93,130	93,540	93,950	94,360	94,780	95,190	95,600	96,020	96,430	96,850	97,260	97,680	98,090	98,510	98,930	25
26	90,670	91,080	91,490	91,900	92,310	92,720	93,130	93,540	93,950	94,360	94,780	95,190	95,600	96,020	96,430	96,850	97,260	97,680	98,090	98,510	98,930	26
27	90,670	91,080	91,490	91,900	92,310	92,720	93,130	93,540	93,950	94,360	94,780	95,190	95,600	96,020	96,430	96,850	97,260	97,680	98,090	98,510	98,930	27
28	90,670	91,080	91,490	91,900	92,310	92,720	93,130	93,540	93,950	94,360	94,780	95,190	95,600	96,020	96,430	96,850	97,260	97,680	98,090	98,510	98,930	28

HEADWATER ELEVATION

GATE ARRANGEMENT	810.0	810.1	810.2	810.3	810.4	810.5	810.6	810.7	810.8	810.9	811.0	811.1	811.2	811.3	811.4	811.5	811.6	811.7	811.8	811.9	812.0	GATE ARRANGEMENT
1	2,660	2,660	2,670	2,670	2,680	2,680	2,690	2,690	2,700	2,700	2,710	2,710	2,720	2,720	2,730	2,730	2,740	2,740	2,750	2,750	2,760	1
2	5,730	5,740	5,750	5,760	5,770	5,790	5,800	5,810	5,820	5,830	5,840	5,850	5,860	5,870	5,880	5,890	5,900	5,920	5,930	5,940	5,950	2
3	8,900	8,920	8,940	8,950	8,970	8,990	9,000	9,020	9,040	9,050	9,070	9,090	9,100	9,120	9,140	9,150	9,170	9,190	9,200	9,220	9,240	3
4	12,090	12,120	12,140	12,170	12,190	12,220	12,240	12,270	12,290	12,310	12,340	12,360	12,390	12,410	12,440	12,460	12,480	12,510	12,530	12,560	12,580	4
5	15,570	15,600	15,630	15,660	15,690	15,720	15,750	15,780	15,810	15,840	15,870	15,900	15,930	15,960	15,990	16,020	16,050	16,080	16,110	16,140	16,170	5
6	18,760	18,800	18,830	18,870	18,900	18,940	18,970	19,010	19,040	19,080	19,110	19,150	19,180	19,220	19,250	19,290	19,320	19,360	19,390	19,430	19,460	6
7	22,430	22,480	22,520	22,570	22,610	22,660	22,710	22,750	22,800	22,840	22,880	22,930	22,970	23,020	23,060	23,110	23,150	23,190	23,240	23,280	23,320	7
8	26,180	26,230	26,280	26,330	26,380	26,430	26,480	26,530	26,580	26,630	26,680	26,730	26,780	26,830	26,870	26,920	26,970	27,020	27,070	27,120	27,170	8
9	29,730	29,780	29,840	29,900	29,950	30,010	30,060	30,120	30,170	30,230	30,280	30,340	30,390	30,440	30,500	30,550	30,610	30,660	30,710	30,770	30,820	9
10	33,220	33,280	33,340	33,400	33,460	33,520	33,580	33,640	33,700	33,760	33,820	33,880	33,940	34,000	34,060	34,110	34,170	34,230	34,290	34,350	34,410	10
11	36,650	36,720	36,780	36,850	36,910	36,980	37,040	37,100	37,170	37,230	37,300	37,360	37,430	37,490	37,550	37,620	37,680	37,740	37,810	37,870	37,930	11
12	40,060	40,130	40,200	40,270	40,340	40,410	40,480	40,550	40,620	40,700	40,770	40,840	40,910	40,980	41,050	41,120	41,190	41,250	41,320	41,390	41,460	12
13	43,410	43,480	43,560	43,640	43,720	43,790	43,870	43,950	44,020	44,100	44,180	44,250	44,330	44,400	44,480	44,560	44,630	44,710	44,780	44,860	44,930	13
14	46,710	46,790	46,880	46,960	47,050	47,130	47,210	47,300	47,380	47,460	47,550	47,630	47,710	47,790	47,880	47,960	48,040	48,120	48,200	48,280	48,360	14
15	49,940	50,030	50,120	50,210	50,300	50,390	50,480	50,570	50,660	50,750	50,830	50,920	51,010	51,100	51,190	51,280	51,360	51,450	51,540	51,630	51,710	15
16	53,130	53,230	53,330	53,420	53,520	53,610	53,710	53,800	53,900	53,990	54,090	54,180	54,280	54,370	54,470	54,560	54,650	54,750	54,840	54,930	55,030	16
17	57,970	58,080	58,190	58,290	58,400	58,500	58,610	58,720	58,820	58,930	59,030	59,140	59,240	59,350	59,450	59,560	59,660	59,770	59,870	59,980	60,080	17
18	62,810	62,930	63,040	63,160	63,280	63,390	63,510	63,630	63,740	63,860	63,980	64,090	64,210	64,320	64,440	64,560	64,670	64,790	64,900	65,020	65,140	18
19	67,650	67,780	67,900	68,030	68,160	68,290	68,410	68,540	68,670	68,790	68,920	69,050	69,170	69,300	69,430	69,550	69,680	69,810	69,940	70,060	70,190	19
20	72,680	72,800	72,920	73,040	73,150	73,270	73,390	73,510	73,620	73,740	73,850	73,970	74,090	74,200	74,320	74,430	74,550	74,660	74,770	74,890	75,000	20
21	77,720	77,820	77,930	78,040	78,150	78,260	78,370	78,470	78,580	78,680	78,790	78,890	79,000	79,100	79,200	79,310	79,410	79,510	79,610	79,710	79,820	21
22	82,750	82,850	82,950	83,050	83,150	83,240	83,340	83,440	83,530	83,630	83,720	83,820	83,910	84,000	84,090	84,180	84,270	84,360	84,450	84,540	84,630	22
23	88,140	88,350	88,550	88,730	88,870	89,020	89,170	89,310	89,460	89,600	89,740	89,880	90,030	90,170	90,310	90,450	90,590	90,730	90,860	91,000	91,140	23
24	93,530	93,850	94,160	94,400	94,600	94,790	94,990	95,180	95,380	95,570	95,760	95,950	96,140	96,330	96,520	96,710	96,900	97,090	97,270	97,460	97,650	24
25	98,930	99,340	99,760	100,100	100,300	100,600	100,800	101,100	101,300	101,500	101,800	102,000	102,300	102,500	102,700	103,000	103,200	103,400	103,700	103,900	104,200	25
26	98,930	99,340	99,760	100,100	100,400	100,700	101,000	101,300	101,600	101,900	102,200	102,500	102,800	103,100	103,400	103,700	104,000	104,300	104,600	104,900	105,200	26
27	98,930	99,340	99,760	100,100	100,500	100,900	101,200	101,600	102,000	102,300	102,700	103,000	103,400	103,800	104,100	104,500	104,800	105,200	105,600	105,900	106,300	27
28	98,930	99,340	99,760	100,200	100,600	101,000	101,400	101,900	102,300	102,700	103,100	103,500	104,000	104,400	104,800	105,200	105,700	106,100	106,500	106,900	107,400	28

HEADWATER 808 to 812
TAILWATER 783.51 to 784.5

MAY 2008

TELLICO DAM

SPILLWAY DISCHARGE

IN CUBIC FEET PER SECOND

HEADWATER ELEVATION

GATE ARRANGEMENT	812.0	812.1	812.2	812.3	812.4	812.5	812.6	812.7	812.8	812.9	813.0	813.1	813.2	813.3	813.4	813.5	813.6	813.7	813.8	813.9	814.0	GATE ARRANGEMENT
1	2,760	2,760	2,770	2,770	2,780	2,780	2,790	2,790	2,800	2,800	2,810	2,810	2,820	2,820	2,830	2,830	2,840	2,840	2,850	2,850	2,860	1
2	5,950	5,960	5,970	5,980	5,990	6,000	6,010	6,020	6,030	6,040	6,050	6,060	6,070	6,080	6,090	6,100	6,110	6,130	6,140	6,150	6,160	2
3	9,240	9,250	9,270	9,290	9,300	9,320	9,340	9,350	9,370	9,380	9,400	9,420	9,430	9,450	9,470	9,480	9,500	9,510	9,530	9,550	9,560	3
4	12,580	12,600	12,630	12,650	12,670	12,700	12,720	12,750	12,770	12,790	12,820	12,840	12,860	12,890	12,910	12,930	12,950	12,980	13,000	13,020	13,050	4
5	16,170	16,200	16,230	16,260	16,290	16,320	16,350	16,380	16,410	16,440	16,470	16,500	16,530	16,560	16,590	16,610	16,640	16,670	16,700	16,730	16,760	5
6	19,460	19,500	19,530	19,570	19,600	19,640	19,670	19,700	19,740	19,770	19,810	19,840	19,880	19,910	19,940	19,980	20,010	20,050	20,080	20,120	20,150	6
7	23,320	23,370	23,410	23,450	23,500	23,540	23,580	23,620	23,660	23,700	23,750	23,790	23,830	23,870	23,910	23,950	23,990	24,030	24,070	24,110	24,150	7
8	27,170	27,210	27,260	27,310	27,360	27,400	27,450	27,500	27,550	27,590	27,640	27,690	27,730	27,780	27,830	27,870	27,920	27,970	28,010	28,060	28,110	8
9	30,820	30,870	30,920	30,980	31,030	31,080	31,130	31,180	31,240	31,290	31,340	31,390	31,440	31,490	31,540	31,590	31,640	31,690	31,740	31,790	31,840	9
10	34,410	34,460	34,520	34,580	34,640	34,700	34,750	34,810	34,870	34,920	34,980	35,040	35,090	35,150	35,210	35,260	35,320	35,380	35,430	35,490	35,540	10
11	37,930	38,000	38,060	38,120	38,180	38,250	38,310	38,370	38,430	38,490	38,550	38,620	38,680	38,740	38,800	38,860	38,920	38,980	39,040	39,100	39,160	11
12	41,460	41,530	41,600	41,670	41,730	41,800	41,870	41,940	42,000	42,070	42,140	42,210	42,270	42,340	42,410	42,470	42,540	42,600	42,670	42,740	42,800	12
13	44,930	45,000	45,080	45,150	45,230	45,300	45,370	45,440	45,520	45,590	45,660	45,730	45,810	45,880	45,950	46,020	46,090	46,160	46,240	46,310	46,380	13
14	48,360	48,440	48,520	48,600	48,680	48,760	48,840	48,920	49,000	49,080	49,150	49,230	49,310	49,390	49,460	49,540	49,620	49,690	49,770	49,850	49,920	14
15	51,710	51,800	51,880	51,960	52,050	52,130	52,220	52,300	52,380	52,460	52,550	52,630	52,710	52,790	52,880	52,960	53,040	53,120	53,200	53,290	53,370	15
16	55,030	55,120	55,210	55,300	55,390	55,470	55,560	55,650	55,740	55,830	55,920	56,010	56,100	56,180	56,270	56,360	56,450	56,530	56,620	56,710	56,800	16
17	60,080	60,180	60,290	60,390	60,490	60,590	60,690	60,800	60,900	61,000	61,100	61,200	61,300	61,400	61,510	61,610	61,710	61,810	61,910	62,010	62,110	17
18	65,140	65,250	65,370	65,480	65,600	65,710	65,830	65,940	66,060	66,170	66,280	66,400	66,510	66,630	66,740	66,850	66,970	67,080	67,190	67,300	67,420	18
19	70,190	70,320	70,450	70,570	70,700	70,830	70,960	71,080	71,210	71,340	71,470	71,590	71,720	71,850	71,970	72,100	72,230	72,350	72,480	72,600	72,720	19
20	75,000	75,140	75,280	75,420	75,550	75,690	75,830	75,970	76,100	76,240	76,380	76,510	76,650	76,780	76,920	77,050	77,190	77,320	77,460	77,590	77,720	20
21	79,820	79,960	80,110	80,260	80,410	80,550	80,700	80,850	80,990	81,140	81,280	81,430	81,570	81,720	81,860	82,010	82,150	82,290	82,440	82,580	82,720	21
22	84,630	84,790	84,940	85,100	85,260	85,410	85,570	85,730	85,880	86,040	86,190	86,350	86,500	86,650	86,810	86,960	87,110	87,260	87,420	87,570	87,720	22
23	91,140	91,270	91,400	91,540	91,670	91,800	91,930	92,060	92,190	92,320	92,450	92,570	92,700	92,830	92,950	93,080	93,200	93,320	93,450	93,570	93,690	23
24	97,650	97,760	97,860	97,970	98,080	98,190	98,290	98,400	98,500	98,600	98,700	98,800	98,900	99,000	99,100	99,200	99,290	99,390	99,480	99,570	99,670	24
25	104,200	104,200	104,300	104,400	104,500	104,600	104,700	104,700	104,800	104,900	105,000	105,000	105,100	105,200	105,200	105,300	105,400	105,400	105,500	105,600	105,600	25
26	105,200	105,400	105,600	105,800	106,000	106,200	106,400	106,600	106,800	107,000	107,200	107,400	107,600	107,800	108,000	108,100	108,300	108,500	108,700	108,900	109,100	26
27	106,300	106,600	106,900	107,200	107,500	107,900	108,200	108,500	108,800	109,100	109,400	109,700	110,000	110,300	110,700	111,000	111,300	111,600	111,900	112,200	112,500	27
28	107,400	107,800	108,200	108,600	109,100	109,500	109,900	110,400	110,800	111,200	111,600	112,100	112,500	112,900	113,400	113,800	114,200	114,700	115,100	115,500	116,000	28

HEADWATER ELEVATION

GATE ARRANGEMENT	814.0	814.1	814.2	814.3	814.4	814.5	814.6	814.7	814.8	814.9	815.0	815.1	815.2	815.3	815.4	815.5	815.6	815.7	815.8	815.9	816.0	GATE ARRANGEMENT
1	2,860	2,860	2,870	2,870	2,880	2,880	2,880	2,890	2,890	2,900	2,900	2,910	2,910	2,920	2,920	2,930						1
2	6,160	6,170	6,180	6,190	6,200	6,210	6,220	6,230	6,240	6,250	6,260	6,270	6,280	6,290	6,300	6,310	6,320	6,330	6,340	6,350	6,360	2
3	9,560	9,580	9,590	9,610	9,630	9,640	9,660	9,670	9,690	9,700	9,720	9,740	9,750	9,770	9,780	9,800	9,810	9,830	9,840	9,860	9,880	3
4	13,050	13,070	13,090	13,110	13,140	13,160	13,180	13,200	13,230	13,250	13,270	13,290	13,320	13,340	13,360	13,380	13,400	13,430	13,450	13,470	13,490	4
5	16,760	16,790	16,820	16,850	16,880	16,910	16,930	16,960	16,990	17,020	17,050	17,080	17,110	17,130	17,160	17,190	17,220	17,250	17,270	17,300	17,330	5
6	20,150	20,180	20,220	20,250	20,280	20,320	20,350	20,380	20,420	20,450	20,480	20,520	20,550	20,580	20,620	20,650	20,680	20,720	20,750	20,780	20,810	6
7	24,150	24,190	24,230	24,270	24,310	24,350	24,390	24,430	24,470	24,500	24,540	24,580	24,620	24,660	24,700	24,740	24,770	24,810	24,850	24,890	24,930	7
8	28,110	28,150	28,200	28,240	28,290	28,340	28,380	28,430	28,470	28,520	28,560	28,610	28,650	28,700	28,740	28,790	28,830	28,880	28,920	28,970	29,010	8
9	31,840	31,890	31,940	31,990	32,040	32,090	32,140	32,190	32,240	32,290	32,340	32,390	32,440	32,490	32,540	32,590	32,630	32,680	32,730	32,780	32,830	9
10	35,540	35,600	35,650	35,710	35,770	35,820	35,880	35,930	35,990	36,040	36,090	36,150	36,200	36,260	36,310	36,370	36,420	36,480	36,530	36,580	36,640	10
11	39,160	39,220	39,280	39,340	39,400	39,460	39,520	39,580	39,640	39,690	39,750	39,810	39,870	39,930	39,990	40,050	40,110	40,160	40,220	40,280	40,340	11
12	42,800	42,870	42,930	43,000	43,060	43,130	43,190	43,260	43,320	43,380	43,450	43,510	43,580	43,640	43,710	43,770	43,830	43,900	43,960	44,030	44,090	12
13	46,380	46,450	46,520	46,590	46,660	46,730	46,800	46,870	46,940	47,010	47,080	47,150	47,210	47,280	47,350	47,420	47,490	47,560	47,630	47,700	47,770	13
14	49,920	50,000	50,070	50,150	50,230	50,300	50,380	50,450	50,530	50,600	50,680	50,750	50,830	50,900	50,970	51,050	51,120	51,200	51,270	51,350	51,420	14
15	53,370	53,450	53,530	53,610	53,690	53,770	53,850	53,930	54,020	54,100	54,180	54,260	54,340	54,420	54,500	54,580	54,660	54,730	54,810	54,890	54,970	15
16	56,800	56,880	56,970	57,060	57,140	57,230	57,320	57,400	57,490	57,580	57,660	57,750	57,830	57,920	58,000	58,090	58,170	58,260	58,340	58,430	58,510	16
17	62,110	62,210	62,300	62,400	62,500	62,600	62,700	62,790	62,890	62,990	63,080	63,180	63,270	63,370	63,460	63,560	63,650	63,740	63,830	63,920	64,020	17
18	67,420	67,530	67,640	67,750	67,860	67,970	68,070	68,180	68,290	68,400	68,500	68,610	68,710	68,820	68,920	69,020	69,120	69,220	69,320	69,420	69,520	18
19	72,720	72,850	72,970	73,090	73,210	73,330	73,450	73,570	73,690	73,810	73,920	74,040	74,150	74,270	74,380	74,490	74,600	74,710	74,810	74,920	75,020	19
20	77,720	77,850	77,990	78,120	78,250	78,380	78,510	78,640	78,760	78,890	79,020	79,140	79,270	79,390	79,520	79,640	79,760	79,880	80,000	80,120	80,240	20
21	82,720	82,860	83,000	83,140	83,280	83,420	83,560	83,700	83,840	83,980	84,110	84,250	84,390	84,520	84,660	84,790	84,930	85,060	85,190	85,320	85,460	21
22	87,720	87,870	88,020	88,170	88,320	88,470	88,620	88,770	88,910	89,060	89,210	89,360	89,500	89,650	89,800	89,940	90,090	90,240	90,380	90,530	90,670	22
23	93,690	93,820	93,950	94,080	94,210	94,340	94,470	94,600	94,720	94,850	94,980	95,100	95,230	95,350	95,470	95,600	95,720	95,840	95,960	96,080	96,210	23
24	99,670	99,780	99,890	100,000	100,100	100,200	100,300	100,400	100,500	100,600	100,700	100,800	100,900	101,000	101,100	101,200	101,300	101,400	101,500	101,600	101,700	24
25	105,600	105,700	105,800	105,900	106,000	106,100	106,200	106,300	106,300	106,400	106,500	106,600	106,700	106,700	106,800	106,900	107,000	107,100	107,100	107,200	107,300	25
26	109,100	109,300	109,500	109,700	109,900	110,100	110,300	110,500	110,700	110,900	111,300	111,300	111,400	111,400	111,500	111,500	111,600	111,600	111,700	111,700	111,800	26
27	112,500	112,800	113,200	113,500	113,800	114,100	114,400	114,800	115,100	115,400	116,000	116,100	116,100	116,100	116,100	116,200	116,200	116,200	116,300	116,300	116,300	27
28	116,000	116,400	116,800	117,300	117,700	118,200	118,600	119,000	119,500	119,900	120,800	120,800	120,800	120,800	120,800	120,800	120,800	120,800	120,800	120,800	120,800	28

MAY 2008

See special instruction for preventing gate overflow on page 2.

HEADWATER 812 to 816
TAILWATER 783.51 to 784.5

TELLICO DAM

SPILLWAY DISCHARGE

IN CUBIC FEET PER SECOND

HEADWATER ELEVATION

GATE ARRANGEMENT	816.0	816.1	816.2	816.3	816.4	816.5	816.6	816.7	816.8	816.9	817.0	817.1	817.2	817.3	817.4	817.5	817.6	817.7	817.8	817.9	818.0	GATE ARRANGEMENT
1																						1
2	6,360	6,370	6,380																			2
3	9,880	9,890	9,910	9,920	9,940	9,950	9,970	9,980	10,000	10,010	10,030											3
4	13,490	13,510	13,540	13,560	13,580	13,600	13,620	13,640	13,670	13,690	13,710	13,910	14,270	14,740	15,290	15,910	16,600	17,350				4
5	17,330	17,360	17,390	17,410	17,440	17,470	17,500	17,520	17,550	17,580	17,600	17,810	18,180	18,650	19,200	19,830	20,530	21,290	22,110	22,980	23,910	5
6	20,810	20,850	20,880	20,910	20,940	20,970	21,010	21,040	21,070	21,100	21,130	21,350	21,720	22,190	22,750	23,390	24,090	24,850	25,680	26,560	27,490	6
7	24,930	24,960	25,000	25,040	25,080	25,110	25,150	25,190	25,230	25,270	25,300	25,520	25,900	26,380	26,950	27,590	28,290	29,060	29,890	30,780	31,720	7
8	29,010	29,050	29,100	29,140	29,190	29,230	29,270	29,320	29,360	29,410	29,450	29,680	30,060	30,550	31,120	31,760	32,480	33,250	34,090	34,980	35,930	8
9	32,830	32,880	32,930	32,980	33,030	33,080	33,130	33,180	33,230	33,280	33,330	33,560	33,950	34,440	35,020	35,670	36,390	37,170	38,020	38,910	39,870	9
10	36,640	36,690	36,750	36,800	36,850	36,910	36,960	37,010	37,070	37,120	37,180	37,410	37,810	38,300	38,880	39,540	40,260	41,050	41,890	42,800	43,750	10
11	40,340	40,400	40,450	40,510	40,570	40,630	40,690	40,740	40,800	40,860	40,920	41,160	41,550	42,050	42,640	43,300	44,020	44,810	45,660	46,570	47,530	11
12	44,090	44,150	44,220	44,280	44,340	44,410	44,470	44,530	44,600	44,660	44,720	44,970	45,370	45,880	46,470	47,130	47,870	48,660	49,520	50,430	51,400	12
13	47,770	47,830	47,900	47,970	48,040	48,110	48,180	48,240	48,310	48,380	48,450	48,700	49,110	49,620	50,210	50,880	51,620	52,420	53,280	54,200	55,170	13
14	51,420	51,490	51,570	51,640	51,710	51,790	51,860	51,940	52,010	52,080	52,160	52,410	52,830	53,340	53,940	54,620	55,360	56,170	57,040	57,960	58,930	14
15	54,970	55,050	55,130	55,210	55,290	55,370	55,450	55,520	55,600	55,680	55,760	56,020	56,440	56,960	57,560	58,240	58,990	59,800	60,670	61,600	62,580	15
16	58,510	58,600	58,680	58,760	58,850	58,930	59,010	59,100	59,180	59,260	59,350	59,610	60,030	60,560	61,170	61,850	62,610	63,420	64,290	65,230	66,210	16
17	64,020	64,110	64,200	64,290	64,370	64,460	64,550	64,640	64,720	64,810	64,900	65,170	65,590	66,120	66,730	67,410	68,170	68,980	69,860	70,790	71,770	17
18	69,520	69,620	69,710	69,810	69,900	70,000	70,090	70,180	70,270	70,360	70,450	70,720	71,150	71,670	72,290	72,980	73,730	74,550	75,420	76,350	77,340	18
19	75,020	75,130	75,230	75,330	75,430	75,530	75,620	75,720	75,810	75,910	76,000	76,270	76,700	77,230	77,850	78,540	79,290	80,110	80,990	81,920	82,900	19
20	80,240	80,360	80,470	80,590	80,700	80,820	80,930	81,040	81,150	81,260	81,370	81,660	82,110	82,660	83,290	84,000	84,770	85,610	86,500	87,450	88,460	20
21	85,460	85,590	85,720	85,850	85,980	86,110	86,230	86,360	86,490	86,620	86,740	87,050	87,520	88,080	88,730	89,460	90,250	91,110	92,020	92,990	94,010	21
22	90,670	90,820	90,960	91,110	91,250	91,400	91,540	91,680	91,830	91,970	92,110	92,440	92,920	93,510	94,180	94,920	95,730	96,610	97,540	98,530	99,570	22
23	96,210	96,350	96,490	96,630	96,770	96,910	97,050	97,190	97,330	97,460	97,600	97,920	98,400	98,980	99,640	100,400	101,200	102,100	103,000	104,000	105,000	23
24	101,700	101,900	102,000	102,200	102,300	102,400	102,600	102,700	102,800	103,000	103,100	103,400	103,900	104,400	105,100	105,800	106,600	107,500	108,400	109,400	110,400	24
25	107,300	107,400	107,500	107,700	107,800	107,900	108,100	108,200	108,300	108,500	108,600	108,900	109,400	109,900	110,600	111,300	112,100	113,000	113,900	114,800	115,900	25
26	111,800	111,900	112,000	112,100	112,200	112,300	112,300	112,400	112,500	112,600	112,700	113,000	113,400	113,900	114,500	115,200	116,000	116,800	117,700	118,600	119,600	26
27	116,300	116,400	116,400	116,500	116,500	116,600	116,600	116,700	116,700	116,800	116,800	117,000	117,400	117,900	118,500	119,200	119,900	120,700	121,500	122,400	123,400	27
28	120,800	120,800	120,900	120,900	120,900	120,900	120,900	120,900	120,900	120,900	120,900	121,100	121,500	121,900	122,500	123,100	123,800	124,500	125,300	126,200	127,100	28

HEADWATER ELEVATION

GATE ARRANGEMENT	818.0	818.1	818.2	818.3	818.4	818.5	818.6	818.7	818.8	818.9	819.0	819.1	819.2	819.3	819.4	819.5	819.6	819.7	819.8	819.9	820.0	GATE ARRANGEMENT
1																						1
2																						2
3																						3
4																						4
5	23,910	24,900	25,930	27,010	28,130																	5
6	27,490	28,480	29,510	30,600	31,730	32,910	34,130	35,400	36,710	38,070	39,460	40,900										6
7	31,720	32,710	33,750	34,850	35,980	37,170	38,400	39,670	40,990	42,350	43,750	45,190	46,680	48,200	49,760	51,370	53,010	54,690	56,400			7
8	35,930	36,930	37,970	39,070	40,210	41,410	42,640	43,920	45,240	46,610	48,020	49,470	50,960	52,480	54,050	55,660	57,310	58,990	60,710	62,470	64,270	8
9	39,870	40,870	41,930	43,030	44,180	45,380	46,620	47,910	49,240	50,610	52,030	53,480	54,980	56,520	58,090	59,710	61,360	63,050	64,780	66,550	68,350	9
10	43,750	44,760	45,820	46,920	48,080	49,280	50,520	51,810	53,150	54,520	55,940	57,400	58,900	60,440	62,020	63,630	65,290	66,980	68,720	70,480	72,290	10
11	47,530	48,540	49,600	50,720	51,870	53,080	54,330	55,620	56,960	58,340	59,760	61,220	62,720	64,270	65,850	67,470	69,130	70,830	72,560	74,330	76,140	11
12	51,400	52,410	53,480	54,600	55,760	56,970	58,230	59,530	60,870	62,250	63,680	65,150	66,660	68,210	69,790	71,420	73,090	74,790	76,530	78,310	80,130	12
13	55,170	56,190	57,270	58,390	59,560	60,770	62,030	63,340	64,680	66,070	67,500	68,980	70,490	72,050	73,640	75,270	76,940	78,650	80,390	82,180	84,000	13
14	58,930	59,960	61,040	62,170	63,340	64,560	65,830	67,140	68,490	69,890	71,320	72,800	74,320	75,880	77,480	79,120	80,790	82,510	84,260	86,050	87,870	14
15	62,580	63,610	64,690	65,820	67,000	68,220	69,490	70,810	72,160	73,560	75,000	76,480	78,010	79,570	81,170	82,810	84,490	86,210	87,960	89,750	91,580	15
16	66,210	67,250	68,330	69,470	70,650	71,880	73,150	74,470	75,830	77,230	78,680	80,160	81,690	83,260	84,860	86,510	88,190	89,910	91,670	93,470	95,300	16
17	71,770	72,810	73,900	75,030	76,210	77,440	78,710	80,030	81,390	82,790	84,230	85,720	87,240	88,800	90,410	92,050	93,730	95,450	97,210	99,000	100,800	17
18	77,340	78,370	79,460	80,590	81,770	83,000	84,270	85,590	86,940	88,340	89,780	91,270	92,790	94,350	95,950	97,590	99,270	101,000	102,700	104,500	106,400	18
19	82,900	83,940	85,020	86,160	87,340	88,560	89,830	91,140	92,500	93,900	95,340	96,820	98,340	99,900	101,500	103,100	104,800	106,500	108,300	110,100	111,900	19
20	88,460	89,510	90,620	91,770	92,970	94,220	95,510	96,840	98,220	99,640	101,100	102,600	104,100	105,700	107,300	109,000	110,700	112,400	114,200	116,000	117,900	20
21	94,010	95,090	96,220	97,390	98,610	99,870	101,200	102,500	103,900	105,400	106,900	108,400	109,900	111,500	113,200	114,900	116,600	118,300	120,100	122,000	123,800	21
22	99,570	100,700	101,800	103,000	104,200	105,500	106,900	108,200	109,700	111,100	112,600	114,200	115,700	117,400	119,000	120,700	122,500	124,300	126,100	127,900	129,800	22
23	105,000	106,100	107,300	108,500	109,700	111,000	112,300	113,700	115,100	116,600	118,100	119,700	121,200	122,900	124,500	126,300	128,000	129,800	131,600	133,500	135,400	23
24	110,400	111,500	112,700	113,900	115,200	116,500	117,800	119,200	120,600	122,100	123,600	125,200	126,800	128,400	130,100	131,800	133,500	135,300	137,100	139,000	140,900	24
25	115,900	117,000	118,100	119,400	120,600	121,900	123,300	124,700	126,100	127,600	129,100	130,700	132,300	133,900	135,600	137,300	139,000	140,800	142,700	144,500	146,400	25
26	119,600	120,700	121,900	123,200	124,400	125,800	127,100	128,500	130,000	131,500	133,000	134,600	136,200	137,900	139,600	141,300	143,100	144,900	146,700	148,600	150,500	26
27	123,400	124,500	125,700	127,000	128,200	129,600	131,000	132,400	133,900	135,400	136,900	138,500	140,200	141,800	143,500	145,300	147,100	148,900	150,800	152,700	154,600	27
28	127,100	128,300	129,500	130,800	132,100	133,400	134,800	136,300	137,800	139,300	140,900	142,500	144,100	145,800	147,500	149,300	151,100	153,000	154,800	156,800	158,700	28

HEADWATER 816 to 820
TAILWATER 783.51 to 784.5

See special instruction for preventing gate overflow on page 2.

MAY 2008

TELLICO DAM
SPILLWAY DISCHARGE
IN CUBIC FEET PER SECOND

HEADWATER ELEVATION

GATE ARRANGEMENT	800.0	800.1	800.2	800.3	800.4	800.5	800.6	800.7	800.8	800.9	801.0	801.1	801.2	801.3	801.4	801.5	801.6	801.7	801.8	801.9	802.0	GATE ARRANGEMENT
1	2,020	2,030	2,030	2,040	2,050	2,050	2,060	2,070	2,070	2,080	2,090	2,090	2,100	2,110	2,110	2,120	2,120	2,130	2,140	2,140	2,150	1
2	4,350	4,360	4,380	4,390	4,400	4,420	4,430	4,450	4,460	4,480	4,490	4,500	4,520	4,530	4,550	4,560	4,570	4,590	4,600	4,610	4,630	2
3	6,750	6,770	6,790	6,810	6,840	6,860	6,880	6,900	6,920	6,950	6,970	6,990	7,010	7,030	7,050	7,080	7,100	7,120	7,140	7,160	7,180	3
4	9,100	9,130	9,160	9,190	9,220	9,250	9,280	9,310	9,340	9,370	9,400	9,430	9,460	9,490	9,520	9,550	9,580	9,610	9,640	9,670	9,700	4
5	11,730	11,770	11,810	11,850	11,880	11,920	11,960	12,000	12,030	12,070	12,110	12,150	12,180	12,220	12,260	12,300	12,330	12,370	12,410	12,440	12,480	5
6	14,200	14,250	14,290	14,340	14,380	14,420	14,470	14,510	14,560	14,600	14,640	14,690	14,730	14,780	14,820	14,860	14,910	14,950	14,990	15,040	15,080	6
7	16,900	16,950	17,010	17,060	17,120	17,170	17,230	17,280	17,340	17,390	17,450	17,500	17,560	17,610	17,670	17,720	17,780	17,830	17,890	17,940	17,990	7
8	19,530	19,590	19,660	19,720	19,790	19,850	19,910	19,980	20,040	20,110	20,170	20,240	20,300	20,370	20,430	20,490	20,560	20,620	20,690	20,750	20,810	8
9	22,630	22,700	22,770	22,840	22,910	22,980	23,060	23,130	23,200	23,270	23,340	23,410	23,480	23,550	23,620	23,690	23,760	23,830	23,900	23,970	24,040	9
10	25,780	25,850	25,930	26,010	26,090	26,160	26,240	26,320	26,390	26,470	26,550	26,620	26,700	26,780	26,850	26,930	27,010	27,080	27,160	27,230	27,310	10
11	28,980	29,060	29,150	29,230	29,310	29,390	29,480	29,560	29,640	29,720	29,800	29,890	29,970	30,050	30,130	30,210	30,290	30,370	30,450	30,530	30,610	11
12	31,810	31,900	31,980	32,070	32,160	32,250	32,340	32,430	32,510	32,600	32,690	32,780	32,860	32,950	33,040	33,130	33,210	33,300	33,390	33,470	33,560	12
13	34,600	34,700	34,790	34,890	34,980	35,080	35,170	35,260	35,360	35,450	35,540	35,640	35,730	35,820	35,910	36,010	36,100	36,190	36,280	36,370	36,470	13
14	37,370	37,470	37,570	37,670	37,770	37,870	37,970	38,070	38,160	38,260	38,360	38,460	38,560	38,660	38,750	38,850	38,950	39,050	39,140	39,240	39,340	14
15	40,110	40,220	40,320	40,430	40,530	40,640	40,740	40,840	40,950	41,050	41,150	41,260	41,360	41,460	41,570	41,670	41,770	41,870	41,970	42,070	42,170	15
16	42,760	42,870	42,980	43,090	43,200	43,310	43,420	43,530	43,640	43,750	43,860	43,970	44,070	44,180	44,290	44,400	44,510	44,610	44,720	44,830	44,930	16
17	46,760	46,880	47,000	47,110	47,230	47,340	47,460	47,570	47,690	47,800	47,910	48,030	48,140	48,250	48,360	48,480	48,590	48,700	48,810	48,920	49,030	17
18	50,770	50,890	51,010	51,130	51,250	51,370	51,490	51,610	51,730	51,850	51,970	52,090	52,200	52,320	52,440	52,550	52,670	52,790	52,900	53,020	53,130	18
19	54,770	54,900	55,030	55,150	55,280	55,410	55,530	55,660	55,780	55,900	56,030	56,150	56,270	56,390	56,510	56,630	56,750	56,870	56,990	57,110	57,230	19
20	56,310	56,520	56,730	56,940	57,150	57,350	57,560	57,770	57,970	58,180	58,380	58,590	58,800	59,000	59,210	59,410	59,620	59,820	60,030	60,230	60,440	20
21	57,860	58,150	58,440	58,720	59,010	59,300	59,590	59,880	60,170	60,450	60,740	61,030	61,320	61,610	61,900	62,190	62,480	62,780	63,070	63,360	63,650	21
22	59,400	59,770	60,140	60,510	60,880	61,250	61,620	61,990	62,360	62,730	63,100	63,480	63,850	64,220	64,600	64,980	65,350	65,730	66,110	66,480	66,860	22
23	59,400	59,770	60,140	60,510	60,880	61,250	61,620	61,990	62,360	62,730	63,100	63,480	63,850	64,220	64,600	64,980	65,350	65,730	66,110	66,480	66,860	23
24	59,400	59,770	60,140	60,510	60,880	61,250	61,620	61,990	62,360	62,730	63,100	63,480	63,850	64,220	64,600	64,980	65,350	65,730	66,110	66,480	66,860	24
25	59,400	59,770	60,140	60,510	60,880	61,250	61,620	61,990	62,360	62,730	63,100	63,480	63,850	64,220	64,600	64,980	65,350	65,730	66,110	66,480	66,860	25
26	59,400	59,770	60,140	60,510	60,880	61,250	61,620	61,990	62,360	62,730	63,100	63,480	63,850	64,220	64,600	64,980	65,350	65,730	66,110	66,480	66,860	26
27	59,400	59,770	60,140	60,510	60,880	61,250	61,620	61,990	62,360	62,730	63,100	63,480	63,850	64,220	64,600	64,980	65,350	65,730	66,110	66,480	66,860	27
28	59,400	59,770	60,140	60,510	60,880	61,250	61,620	61,990	62,360	62,730	63,100	63,480	63,850	64,220	64,600	64,980	65,350	65,730	66,110	66,480	66,860	28

HEADWATER ELEVATION

GATE ARRANGEMENT	802.0	802.1	802.2	802.3	802.4	802.5	802.6	802.7	802.8	802.9	803.0	803.1	803.2	803.3	803.4	803.5	803.6	803.7	803.8	803.9	804.0	GATE ARRANGEMENT
1	2,150	2,160	2,160	2,170	2,180	2,180	2,190	2,190	2,200	2,210	2,210	2,220	2,220	2,230	2,240	2,240	2,250	2,260	2,260	2,270	2,270	1
2	4,630	4,640	4,660	4,670	4,680	4,700	4,710	4,720	4,740	4,750	4,760	4,780	4,790	4,800	4,810	4,830	4,840	4,850	4,870	4,880	4,890	2
3	7,180	7,200	7,220	7,250	7,270	7,290	7,310	7,330	7,350	7,370	7,390	7,410	7,430	7,450	7,470	7,490	7,510	7,530	7,550	7,570	7,590	3
4	9,700	9,730	9,750	9,780	9,810	9,840	9,870	9,900	9,930	9,960	9,990	10,010	10,040	10,070	10,100	10,130	10,160	10,180	10,210	10,240	10,270	4
5	12,480	12,520	12,560	12,590	12,630	12,670	12,700	12,740	12,780	12,810	12,850	12,890	12,920	12,960	13,000	13,030	13,070	13,110	13,140	13,180	13,220	5
6	15,080	15,130	15,170	15,210	15,260	15,300	15,340	15,390	15,430	15,470	15,520	15,560	15,600	15,640	15,690	15,730	15,770	15,810	15,860	15,900	15,940	6
7	17,990	18,050	18,100	18,150	18,210	18,260	18,310	18,360	18,420	18,470	18,520	18,570	18,620	18,670	18,720	18,770	18,820	18,870	18,920	18,970	19,020	7
8	20,810	20,880	20,940	21,000	21,070	21,130	21,190	21,250	21,320	21,380	21,440	21,500	21,570	21,630	21,690	21,750	21,810	21,870	21,930	21,990	22,050	8
9	24,040	24,110	24,180	24,250	24,320	24,390	24,460	24,520	24,590	24,660	24,730	24,800	24,860	24,930	25,000	25,060	25,130	25,200	25,260	25,330	25,390	9
10	27,310	27,380	27,460	27,530	27,610	27,680	27,760	27,830	27,900	27,980	28,050	28,120	28,200	28,270	28,340	28,410	28,490	28,560	28,630	28,700	28,770	10
11	30,610	30,690	30,770	30,850	30,930	31,010	31,090	31,170	31,250	31,330	31,400	31,480	31,560	31,640	31,710	31,790	31,860	31,940	32,020	32,090	32,170	11
12	33,560	33,640	33,730	33,810	33,900	33,980	34,070	34,150	34,240	34,320	34,400	34,490	34,570	34,650	34,740	34,820	34,900	34,980	35,060	35,140	35,230	12
13	36,470	36,560	36,650	36,740	36,830	36,920	37,010	37,100	37,190	37,280	37,370	37,460	37,550	37,630	37,720	37,810	37,900	37,990	38,070	38,160	38,250	13
14	39,340	39,430	39,530	39,630	39,720	39,820	39,910	40,010	40,100	40,200	40,290	40,390	40,480	40,570	40,670	40,760	40,860	40,950	41,040	41,130	41,230	14
15	42,170	42,280	42,380	42,480	42,580	42,680	42,780	42,880	42,980	43,080	43,180	43,270	43,370	43,470	43,570	43,670	43,770	43,870	43,960	44,060	44,160	15
16	44,930	45,040	45,150	45,250	45,360	45,460	45,570	45,670	45,780	45,880	45,990	46,090	46,200	46,300	46,410	46,510	46,620	46,720	46,820	46,930	47,030	16
17	49,030	49,140	49,250	49,360	49,470	49,580	49,690	49,800	49,910	50,020	50,130	50,240	50,350	50,460	50,570	50,680	50,790	50,900	51,010	51,120	51,230	17
18	53,130	53,250	53,360	53,470	53,590	53,700	53,820	53,930	54,050	54,160	54,280	54,390	54,510	54,620	54,740	54,850	54,970	55,080	55,200	55,320	55,430	18
19	57,230	57,350	57,470	57,590	57,700	57,820	57,940	58,060	58,180	58,300	58,420	58,540	58,660	58,780	58,900	59,020	59,140	59,270	59,390	59,510	59,640	19
20	60,440	60,650	60,850	61,060	61,260	61,470	61,680	61,880	62,090	62,300	62,500	62,710	62,920	63,130	63,340	63,550	63,760	63,970	64,180	64,390	64,610	20
21	63,650	63,940	64,240	64,530	64,820	65,120	65,410	65,700	66,000	66,290	66,590	66,890	67,180	67,480	67,780	68,080	68,380	68,670	68,970	69,270	69,580	21
22	66,860	67,240	67,620	68,000	68,380	68,760	69,140	69,530	69,910	70,290	70,680	71,060	71,450	71,830	72,220	72,600	72,990	73,380	73,770	74,160	74,540	22
23	66,860	67,240	67,620	68,000	68,380	68,760	69,140	69,530	69,910	70,290	70,680	71,060	71,450	71,830	72,220	72,600	72,990	73,380	73,770	74,160	74,540	23
24	66,860	67,240	67,620	68,000	68,380	68,760	69,140	69,530	69,910	70,290	70,680	71,060	71,450	71,830	72,220	72,600	72,990	73,380	73,770	74,160	74,540	24
25	66,860	67,240	67,620	68,000	68,380	68,760	69,140	69,530	69,910	70,290	70,680	71,060	71,450	71,830	72,220	72,600	72,990	73,380	73,770	74,160	74,540	25
26	66,860	67,240	67,620	68,000	68,380	68,760	69,140	69,530	69,910	70,290	70,680	71,060	71,450	71,830	72,220	72,600	72,990	73,380	73,770	74,160	74,540	26
27	66,860	67,240	67,620	68,000	68,380	68,760	69,140	69,530	69,910	70,290	70,680	71,060	71,450	71,830	72,220	72,600	72,990	73,380	73,770	74,160	74,540	27
28	66,860	67,240	67,620	68,000	68,380	68,760	69,140	69,530	69,910	70,290	70,680	71,060	71,450	71,830	72,220	72,600	72,990	73,380	73,770	74,160	74,540	28

MAY 2008

HEADWATER 800 to 804
TAILWATER 784.51 to 785.5

TELLICO DAM

SPILLWAY DISCHARGE

IN CUBIC FEET PER SECOND

HEADWATER ELEVATION

GATE ARRANGEMENT	804.0	804.1	804.2	804.3	804.4	804.5	804.6	804.7	804.8	804.9	805.0	805.1	805.2	805.3	805.4	805.5	805.6	805.7	805.8	805.9	806.0	GATE ARRANGEMENT
1	2,270	2,280	2,290	2,290	2,300	2,300	2,310	2,310	2,320	2,330	2,330	2,340	2,340	2,350	2,360	2,360	2,370	2,370	2,380	2,380	2,390	1
2	4,890	4,910	4,920	4,930	4,940	4,960	4,970	4,980	4,990	5,010	5,020	5,030	5,040	5,060	5,070	5,080	5,090	5,110	5,120	5,130	5,140	2
3	7,590	7,610	7,630	7,650	7,670	7,690	7,710	7,730	7,750	7,770	7,790	7,810	7,830	7,850	7,870	7,890	7,910	7,930	7,940	7,960	7,980	3
4	10,270	10,300	10,330	10,350	10,380	10,410	10,440	10,460	10,490	10,520	10,550	10,570	10,600	10,630	10,650	10,680	10,710	10,740	10,760	10,790	10,820	4
5	13,220	13,250	13,290	13,320	13,360	13,390	13,430	13,460	13,500	13,530	13,570	13,610	13,640	13,670	13,710	13,740	13,780	13,810	13,850	13,880	13,920	5
6	15,940	15,980	16,030	16,070	16,110	16,150	16,190	16,230	16,280	16,320	16,360	16,400	16,440	16,480	16,520	16,560	16,600	16,640	16,680	16,730	16,770	6
7	19,020	19,060	19,110	19,160	19,200	19,250	19,300	19,340	19,390	19,430	19,480	19,520	19,570	19,610	19,660	19,700	19,740	19,790	19,830	19,870	19,920	7
8	22,050	22,110	22,170	22,230	22,290	22,350	22,410	22,470	22,530	22,590	22,640	22,700	22,760	22,820	22,870	22,930	22,990	23,040	23,100	23,160	23,210	8
9	25,390	25,460	25,520	25,590	25,650	25,720	25,780	25,850	25,910	25,970	26,030	26,100	26,160	26,220	26,280	26,350	26,410	26,470	26,530	26,590	26,650	9
10	28,770	28,840	28,910	28,980	29,050	29,120	29,190	29,250	29,320	29,390	29,460	29,520	29,590	29,660	29,720	29,790	29,860	29,920	29,990	30,050	30,120	10
11	32,170	32,240	32,310	32,390	32,460	32,530	32,610	32,680	32,750	32,820	32,890	32,970	33,040	33,110	33,180	33,250	33,320	33,390	33,460	33,530	33,600	11
12	35,230	35,310	35,390	35,470	35,550	35,620	35,700	35,780	35,860	35,940	36,020	36,090	36,170	36,250	36,330	36,400	36,480	36,560	36,630	36,710	36,780	12
13	38,250	38,330	38,420	38,510	38,590	38,680	38,760	38,850	38,930	39,020	39,100	39,180	39,270	39,350	39,430	39,520	39,600	39,680	39,770	39,850	39,930	13
14	41,230	41,320	41,410	41,500	41,590	41,680	41,780	41,870	41,960	42,050	42,140	42,230	42,320	42,410	42,500	42,590	42,680	42,770	42,850	42,940	43,030	14
15	44,160	44,260	44,360	44,450	44,550	44,650	44,740	44,840	44,940	45,040	45,130	45,230	45,320	45,420	45,520	45,610	45,710	45,800	45,900	45,990	46,090	15
16	47,030	47,140	47,240	47,340	47,450	47,550	47,660	47,760	47,860	47,970	48,070	48,170	48,270	48,380	48,480	48,580	48,680	48,790	48,890	48,990	49,090	16
17	51,230	51,340	51,460	51,570	51,680	51,790	51,900	52,010	52,130	52,240	52,350	52,460	52,570	52,690	52,800	52,910	53,020	53,140	53,250	53,360	53,470	17
18	55,430	55,550	55,670	55,790	55,910	56,030	56,150	56,270	56,390	56,510	56,630	56,750	56,870	57,000	57,120	57,240	57,360	57,490	57,610	57,730	57,850	18
19	59,640	59,760	59,890	60,010	60,140	60,270	60,390	60,520	60,650	60,780	60,910	61,040	61,170	61,300	61,440	61,570	61,700	61,830	61,970	62,100	62,230	19
20	64,610	64,810	64,960	65,120	65,280	65,430	65,590	65,750	65,910	66,070	66,220	66,380	66,540	66,700	66,860	67,020	67,170	67,330	67,490	67,650	67,810	20
21	69,580	69,850	70,040	70,230	70,420	70,600	70,790	70,980	71,160	71,350	71,540	71,720	71,910	72,090	72,280	72,460	72,650	72,830	73,010	73,200	73,380	21
22	74,540	74,900	75,120	75,340	75,550	75,770	75,990	76,210	76,420	76,640	76,850	77,060	77,270	77,490	77,700	77,910	78,120	78,330	78,540	78,740	78,950	22
23	74,540	74,910	75,190	75,460	75,740	76,010	76,290	76,560	76,840	77,110	77,390	77,660	77,940	78,210	78,480	78,750	79,030	79,300	79,570	79,840	80,110	23
24	74,540	74,920	75,260	75,590	75,920	76,260	76,590	76,920	77,260	77,590	77,930	78,260	78,600	78,930	79,260	79,600	79,930	80,270	80,600	80,940	81,270	24
25	74,540	74,930	75,320	75,720	76,110	76,500	76,890	77,280	77,680	78,070	78,470	78,860	79,260	79,650	80,050	80,440	80,840	81,240	81,640	82,040	82,440	25
26	74,540	74,930	75,320	75,720	76,110	76,500	76,890	77,280	77,680	78,070	78,470	78,860	79,260	79,650	80,050	80,440	80,840	81,240	81,640	82,040	82,440	26
27	74,540	74,930	75,320	75,720	76,110	76,500	76,890	77,280	77,680	78,070	78,470	78,860	79,260	79,650	80,050	80,440	80,840	81,240	81,640	82,040	82,440	27
28	74,540	74,930	75,320	75,720	76,110	76,500	76,890	77,280	77,680	78,070	78,470	78,860	79,260	79,650	80,050	80,440	80,840	81,240	81,640	82,040	82,440	28

HEADWATER ELEVATION

GATE ARRANGEMENT	806.0	806.1	806.2	806.3	806.4	806.5	806.6	806.7	806.8	806.9	807.0	807.1	807.2	807.3	807.4	807.5	807.6	807.7	807.8	807.9	808.0	GATE ARRANGEMENT
1	2,390	2,400	2,400	2,410	2,410	2,420	2,420	2,430	2,430	2,440	2,450	2,450	2,460	2,460	2,470	2,470	2,480	2,480	2,490	2,500	2,500	1
2	5,140	5,160	5,170	5,180	5,190	5,200	5,220	5,230	5,240	5,250	5,260	5,280	5,290	5,300	5,310	5,320	5,340	5,350	5,360	5,370	5,380	2
3	7,980	8,000	8,020	8,040	8,060	8,080	8,100	8,110	8,130	8,150	8,170	8,190	8,210	8,230	8,240	8,260	8,280	8,300	8,320	8,340	8,350	3
4	10,820	10,840	10,870	10,900	10,920	10,950	10,980	11,000	11,030	11,050	11,080	11,110	11,130	11,160	11,190	11,210	11,240	11,260	11,290	11,310	11,340	4
5	13,920	13,950	13,980	14,020	14,050	14,080	14,120	14,150	14,190	14,220	14,250	14,280	14,320	14,350	14,380	14,420	14,450	14,480	14,510	14,550	14,580	5
6	16,770	16,810	16,850	16,890	16,920	16,960	17,000	17,040	17,080	17,120	17,160	17,200	17,240	17,280	17,310	17,350	17,390	17,430	17,470	17,510	17,540	6
7	19,920	19,960	20,000	20,050	20,090	20,130	20,180	20,220	20,260	20,310	20,350	20,390	20,440	20,480	20,530	20,570	20,610	20,660	20,700	20,750	20,790	7
8	23,210	23,270	23,330	23,380	23,440	23,490	23,550	23,600	23,660	23,710	23,770	23,820	23,880	23,930	23,990	24,040	24,100	24,150	24,210	24,260	24,310	8
9	26,650	26,710	26,770	26,830	26,890	26,950	27,020	27,080	27,140	27,190	27,250	27,310	27,370	27,430	27,490	27,550	27,610	27,670	27,730	27,790	27,850	9
10	30,120	30,180	30,250	30,310	30,380	30,440	30,510	30,570	30,640	30,700	30,760	30,830	30,890	30,960	31,020	31,080	31,150	31,210	31,270	31,340	31,400	10
11	33,600	33,670	33,740	33,800	33,870	33,940	34,010	34,080	34,150	34,210	34,280	34,350	34,420	34,490	34,550	34,620	34,690	34,760	34,820	34,890	34,960	11
12	36,780	36,860	36,930	37,010	37,080	37,160	37,230	37,310	37,380	37,460	37,530	37,610	37,680	37,750	37,830	37,900	37,980	38,050	38,120	38,200	38,270	12
13	39,930	40,010	40,090	40,180	40,260	40,340	40,420	40,500	40,580	40,660	40,740	40,820	40,900	40,980	41,060	41,140	41,220	41,300	41,380	41,460	41,540	13
14	43,030	43,120	43,210	43,300	43,380	43,470	43,560	43,650	43,730	43,820	43,910	44,000	44,080	44,170	44,260	44,340	44,430	44,520	44,600	44,690	44,770	14
15	46,090	46,180	46,280	46,370	46,470	46,560	46,660	46,750	46,840	46,940	47,030	47,120	47,220	47,310	47,400	47,500	47,590	47,680	47,770	47,870	47,960	15
16	49,090	49,200	49,300	49,400	49,500	49,600	49,700	49,800	49,900	50,000	50,100	50,200	50,300	50,400	50,500	50,600	50,700	50,800	50,900	51,000	51,090	16
17	53,470	53,590	53,700	53,810	53,920	54,040	54,150	54,260	54,370	54,480	54,600	54,710	54,820	54,930	55,040	55,150	55,260	55,370	55,490	55,600	55,700	17
18	57,850	57,980	58,100	58,220	58,350	58,470	58,600	58,720	58,840	58,970	59,090	59,210	59,340	59,460	59,580	59,700	59,830	59,950	60,070	60,190	60,320	18
19	62,230	62,370	62,500	62,640	62,770	62,910	63,040	63,180	63,310	63,450	63,580	63,720	63,850	63,990	64,120	64,260	64,390	64,530	64,660	64,790	64,930	19
20	67,810	67,930	68,040	68,160	68,280	68,400	68,510	68,630	68,750	68,860	68,980	69,090	69,210	69,320	69,430	69,550	69,660	69,770	69,880	69,990	70,110	20
21	73,380	73,480	73,580	73,680	73,790	73,880	73,980	74,080	74,180	74,280	74,370	74,470	74,560	74,650	74,750	74,840	74,930	75,020	75,110	75,200	75,280	21
22	78,950	79,040	79,120	79,210	79,290	79,370	79,450	79,530	79,610	79,690	79,770	79,840	79,910	79,990	80,060	80,130	80,200	80,270	80,330	80,400	80,460	22
23	80,110	80,300	80,490	80,680	80,870	81,060	81,250	81,440	81,620	81,810	82,000	82,180	82,360	82,550	82,730	82,910	83,100	83,280	83,460	83,640	83,820	23
24	81,270	81,570	81,870	82,160	82,460	82,750	83,050	83,340	83,640	83,930	84,230	84,520	84,820	85,110	85,400	85,700	85,990	86,290	86,580	86,880	87,170	24
25	82,440	82,840	83,240	83,640	84,040	84,440	84,840	85,250	85,650	86,050	86,460	86,860	87,270	87,670	88,080	88,480	88,890	89,300	89,710	90,110	90,520	25
26	82,440	82,840	83,240	83,640	84,040	84,440	84,840	85,250	85,650	86,050	86,460	86,860	87,270	87,670	88,080	88,480	88,890	89,300	89,710	90,110	90,520	26
27	82,440	82,840	83,240	83,640	84,040	84,440	84,840	85,250	85,650	86,050	86,460	86,860	87,270	87,670	88,080	88,480	88,890	89,300	89,710	90,110	90,520	27
28	82,440	82,840	83,240	83,640	84,040	84,440	84,840	85,250	85,650	86,050	86,460	86,860	87,270	87,670	88,080	88,480	88,890	89,300	89,710	90,110	90,520	28

HEADWATER 804 to 808
TAILWATER 784.51 to 785.5

MAY 2008

TELLICO DAM
SPILLWAY DISCHARGE
IN CUBIC FEET PER SECOND

HEADWATER ELEVATION

GATE ARRANGEMENT	808.0	808.1	808.2	808.3	808.4	808.5	808.6	808.7	808.8	808.9	809.0	809.1	809.2	809.3	809.4	809.5	809.6	809.7	809.8	809.9	810.0	GATE ARRANGEMENT
1	2,500	2,510	2,510	2,520	2,520	2,530	2,530	2,540	2,540	2,550	2,550	2,560	2,570	2,570	2,580	2,580	2,590	2,590	2,600	2,600	2,610	1
2	5,380	5,390	5,410	5,420	5,430	5,440	5,450	5,460	5,480	5,490	5,500	5,510	5,520	5,530	5,540	5,560	5,570	5,580	5,590	5,600	5,610	2
3	8,350	8,370	8,390	8,410	8,430	8,440	8,460	8,480	8,500	8,520	8,530	8,550	8,570	8,590	8,600	8,620	8,640	8,660	8,680	8,690	8,710	3
4	11,340	11,370	11,390	11,420	11,440	11,470	11,490	11,520	11,540	11,570	11,590	11,620	11,640	11,670	11,690	11,720	11,740	11,770	11,790	11,820	11,840	4
5	14,580	14,610	14,640	14,670	14,710	14,740	14,770	14,800	14,830	14,860	14,890	14,930	14,960	14,990	15,020	15,050	15,080	15,110	15,140	15,170	15,200	5
6	17,540	17,580	17,620	17,660	17,690	17,730	17,770	17,800	17,840	17,880	17,910	17,950	17,990	18,020	18,060	18,090	18,130	18,170	18,200	18,240	18,270	6
7	20,790	20,840	20,890	20,930	20,980	21,030	21,070	21,120	21,170	21,220	21,260	21,310	21,360	21,410	21,460	21,510	21,550	21,600	21,650	21,700	21,750	7
8	24,310	24,370	24,420	24,480	24,530	24,580	24,640	24,690	24,750	24,800	24,850	24,910	24,960	25,010	25,070	25,120	25,170	25,230	25,280	25,330	25,390	8
9	27,850	27,910	27,970	28,030	28,090	28,150	28,210	28,270	28,320	28,380	28,440	28,500	28,560	28,620	28,680	28,740	28,800	28,860	28,910	28,970	29,030	9
10	31,400	31,460	31,530	31,590	31,660	31,720	31,780	31,850	31,910	31,970	32,040	32,100	32,160	32,230	32,290	32,350	32,420	32,480	32,540	32,610	32,670	10
11	34,960	35,030	35,090	35,160	35,230	35,300	35,360	35,430	35,500	35,570	35,640	35,700	35,770	35,840	35,910	35,970	36,040	36,110	36,180	36,240	36,310	11
12	38,270	38,350	38,420	38,490	38,570	38,640	38,710	38,790	38,860	38,940	39,010	39,080	39,160	39,230	39,300	39,380	39,450	39,520	39,600	39,670	39,740	12
13	41,540	41,620	41,700	41,780	41,860	41,940	42,020	42,100	42,180	42,260	42,340	42,420	42,500	42,570	42,650	42,730	42,810	42,890	42,970	43,040	43,120	13
14	44,770	44,860	44,950	45,030	45,120	45,200	45,290	45,370	45,460	45,540	45,630	45,710	45,800	45,880	45,970	46,050	46,140	46,220	46,300	46,390	46,470	14
15	47,960	48,050	48,140	48,230	48,320	48,410	48,510	48,600	48,690	48,780	48,870	48,960	49,050	49,140	49,230	49,310	49,400	49,490	49,580	49,670	49,760	15
16	51,090	51,190	51,290	51,390	51,480	51,580	51,680	51,770	51,870	51,960	52,060	52,160	52,250	52,350	52,440	52,540	52,630	52,720	52,820	52,910	53,010	16
17	55,700	55,810	55,920	56,030	56,140	56,250	56,360	56,470	56,570	56,680	56,790	56,890	57,000	57,110	57,210	57,320	57,430	57,530	57,640	57,740	57,850	17
18	60,320	60,440	60,560	60,680	60,800	60,920	61,040	61,160	61,280	61,400	61,520	61,630	61,750	61,870	61,990	62,110	62,220	62,340	62,460	62,580	62,690	18
19	64,930	65,060	65,190	65,320	65,460	65,590	65,720	65,850	65,980	66,110	66,240	66,370	66,500	66,630	66,760	66,890	67,020	67,150	67,280	67,410	67,540	19
20	70,110	70,230	70,360	70,490	70,620	70,740	70,870	70,990	71,120	71,240	71,370	71,490	71,610	71,740	71,860	71,980	72,100	72,220	72,340	72,460	72,580	20
21	75,280	75,410	75,530	75,650	75,770	75,890	76,010	76,130	76,250	76,370	76,490	76,610	76,720	76,840	76,950	77,070	77,180	77,300	77,410	77,520	77,630	21
22	80,460	80,580	80,700	80,820	80,930	81,050	81,160	81,280	81,390	81,500	81,610	81,720	81,830	81,940	82,050	82,160	82,260	82,370	82,470	82,580	82,680	22
23	83,820	84,030	84,250	84,460	84,680	84,890	85,100	85,320	85,530	85,740	85,950	86,160	86,380	86,590	86,800	87,010	87,220	87,430	87,640	87,840	88,050	23
24	87,170	87,480	87,790	88,110	88,420	88,730	89,040	89,360	89,670	89,980	90,290	90,610	90,920	91,230	91,540	91,860	92,170	92,480	92,800	93,110	93,420	24
25	90,520	90,930	91,340	91,750	92,160	92,570	92,980	93,400	93,810	94,220	94,630	95,050	95,460	95,880	96,290	96,710	97,120	97,540	97,960	98,370	98,790	25
26	90,520	90,930	91,340	91,750	92,160	92,570	92,980	93,400	93,810	94,220	94,630	95,050	95,460	95,880	96,290	96,710	97,120	97,540	97,960	98,370	98,790	26
27	90,520	90,930	91,340	91,750	92,160	92,570	92,980	93,400	93,810	94,220	94,630	95,050	95,460	95,880	96,290	96,710	97,120	97,540	97,960	98,370	98,790	27
28	90,520	90,930	91,340	91,750	92,160	92,570	92,980	93,400	93,810	94,220	94,630	95,050	95,460	95,880	96,290	96,710	97,120	97,540	97,960	98,370	98,790	28

HEADWATER ELEVATION

GATE ARRANGEMENT	810.0	810.1	810.2	810.3	810.4	810.5	810.6	810.7	810.8	810.9	811.0	811.1	811.2	811.3	811.4	811.5	811.6	811.7	811.8	811.9	812.0	GATE ARRANGEMENT
1	2,610	2,610	2,620	2,620	2,630	2,630	2,640	2,640	2,650	2,650	2,660	2,660	2,670	2,670	2,680	2,680	2,690	2,690	2,700	2,700	2,710	1
2	5,610	5,620	5,630	5,650	5,660	5,670	5,680	5,690	5,700	5,710	5,720	5,730	5,750	5,760	5,770	5,780	5,790	5,800	5,810	5,820	5,830	2
3	8,710	8,730	8,740	8,760	8,780	8,800	8,810	8,830	8,850	8,870	8,880	8,900	8,920	8,930	8,950	8,970	8,980	9,000	9,020	9,030	9,050	3
4	11,840	11,870	11,890	11,920	11,940	11,970	11,990	12,010	12,040	12,060	12,090	12,110	12,140	12,160	12,180	12,210	12,230	12,260	12,280	12,300	12,330	4
5	15,200	15,230	15,260	15,290	15,320	15,360	15,390	15,420	15,450	15,480	15,510	15,540	15,570	15,600	15,630	15,660	15,690	15,720	15,750	15,780	15,810	5
6	18,270	18,310	18,340	18,380	18,410	18,450	18,480	18,520	18,550	18,590	18,620	18,660	18,690	18,730	18,760	18,800	18,830	18,870	18,900	18,940	18,970	6
7	21,750	21,800	21,850	21,900	21,950	21,990	22,040	22,090	22,140	22,190	22,240	22,280	22,330	22,380	22,430	22,470	22,520	22,570	22,610	22,660	22,710	7
8	25,390	25,440	25,490	25,540	25,600	25,650	25,700	25,750	25,800	25,860	25,910	25,960	26,010	26,060	26,110	26,160	26,210	26,260	26,310	26,360	26,420	8
9	29,030	29,090	29,150	29,210	29,270	29,320	29,380	29,440	29,500	29,550	29,610	29,670	29,730	29,780	29,840	29,900	29,950	30,010	30,060	30,120	30,180	9
10	32,670	32,730	32,800	32,860	32,920	32,980	33,050	33,110	33,170	33,230	33,290	33,360	33,420	33,480	33,540	33,600	33,660	33,730	33,790	33,850	33,910	10
11	36,310	36,380	36,450	36,510	36,580	36,650	36,710	36,780	36,850	36,910	36,980	37,050	37,110	37,180	37,240	37,310	37,370	37,440	37,510	37,570	37,640	11
12	39,740	39,810	39,890	39,960	40,030	40,100	40,180	40,250	40,320	40,390	40,470	40,540	40,610	40,680	40,750	40,820	40,890	40,960	41,030	41,110	41,180	12
13	43,120	43,200	43,280	43,360	43,430	43,510	43,590	43,670	43,740	43,820	43,900	43,970	44,050	44,130	44,200	44,280	44,350	44,430	44,510	44,580	44,660	13
14	46,470	46,560	46,640	46,720	46,810	46,890	46,970	47,060	47,140	47,220	47,300	47,380	47,470	47,550	47,630	47,710	47,790	47,870	47,960	48,040	48,120	14
15	49,760	49,850	49,940	50,020	50,110	50,200	50,290	50,370	50,460	50,550	50,640	50,720	50,810	50,900	50,980	51,070	51,160	51,240	51,330	51,410	51,500	15
16	53,010	53,100	53,190	53,290	53,380	53,470	53,560	53,660	53,750	53,840	53,930	54,020	54,120	54,210	54,300	54,390	54,480	54,570	54,660	54,760	54,850	16
17	57,850	57,950	58,060	58,160	58,270	58,370	58,480	58,580	58,690	58,790	58,890	59,000	59,100	59,200	59,310	59,410	59,520	59,620	59,720	59,830	59,930	17
18	62,690	62,810	62,930	63,040	63,160	63,270	63,390	63,510	63,620	63,740	63,850	63,970	64,090	64,200	64,320	64,430	64,550	64,660	64,780	64,900	65,010	18
19	67,540	67,660	67,790	67,920	68,050	68,180	68,300	68,430	68,560	68,690	68,820	68,940	69,070	69,200	69,330	69,450	69,580	69,710	69,840	69,970	70,090	19
20	72,580	72,700	72,820	72,940	73,060	73,180	73,300	73,420	73,530	73,650	73,770	73,890	74,000	74,120	74,240	74,350	74,470	74,580	74,700	74,820	74,930	20
21	77,630	77,740	77,860	77,970	78,080	78,180	78,290	78,400	78,510	78,620	78,720	78,830	78,940	79,040	79,150	79,250	79,360	79,460	79,560	79,670	79,770	21
22	82,680	82,780	82,890	82,990	83,090	83,190	83,290	83,390	83,480	83,580	83,680	83,770	83,870	83,960	84,060	84,150	84,240	84,330	84,420	84,520	84,600	22
23	88,050	88,260	88,470	88,640	88,780	88,930	89,080	89,230	89,370	89,520	89,660	89,810	89,950	90,090	90,230	90,370	90,510	90,650	90,790	90,930	91,070	23
24	93,420	93,740	94,050	94,280	94,480	94,680	94,870	95,070	95,260	95,450	95,650	95,840	96,030	96,220	96,410	96,600	96,790	96,970	97,160	97,350	97,530	24
25	98,790	99,210	99,630	99,930	100,200	100,400	100,700	100,900	101,100	101,400	101,600	101,900	102,100	102,300	102,600	102,800	103,100	103,300	103,500	103,800	104,000	25
26	98,790	99,210	99,630	99,970	100,300	100,600	100,900	101,200	101,500	101,800	102,100	102,400	102,700	103,000	103,300	103,600	103,900	104,200	104,500	104,800	105,100	26
27	98,790	99,210	99,630	100,000	100,400	100,700	101,100	101,500	101,800	102,200	102,500	102,900	103,300	103,600	104,000	104,300	104,700	105,100	105,400	105,800	106,200	27
28	98,790	99,210	99,630	100,000	100,500	100,900	101,300	101,700	102,100	102,600	103,000	103,400	103,800	104,300	104,700	105,100	105,500	106,000	106,400	106,800	107,200	28

MAY 2008

HEADWATER 808 to 812
TAILWATER 784.51 to 785.5

TELLICO DAM
SPILLWAY DISCHARGE
IN CUBIC FEET PER SECOND

GATE ARRANGEMENT	HEADWATER ELEVATION																				GATE ARRANGEMENT
	812.0	812.1	812.2	812.3	812.4	812.5	812.6	812.7	812.8	812.9	813.0	813.1	813.2	813.3	813.4	813.5	813.6	813.7	813.8	813.9	814.0	
1	2,710	2,710	2,720	2,720	2,730	2,730	2,740	2,740	2,750	2,750	2,760	2,760	2,770	2,770	2,780	2,780	2,790	2,790	2,800	2,800	2,810	1
2	5,830	5,840	5,850	5,860	5,880	5,890	5,900	5,910	5,920	5,930	5,940	5,950	5,960	5,970	5,980	5,990	6,000	6,010	6,020	6,030	6,040	2
3	9,050	9,070	9,090	9,100	9,120	9,140	9,150	9,170	9,180	9,200	9,220	9,230	9,250	9,270	9,280	9,300	9,320	9,330	9,350	9,360	9,380	3
4	12,330	12,350	12,380	12,400	12,420	12,450	12,470	12,490	12,520	12,540	12,570	12,590	12,610	12,640	12,660	12,680	12,710	12,730	12,750	12,780	12,800	4
5	15,810	15,840	15,870	15,900	15,930	15,960	15,990	16,020	16,050	16,080	16,110	16,140	16,170	16,200	16,230	16,260	16,290	16,320	16,350	16,380	16,410	5
6	18,970	19,010	19,040	19,080	19,110	19,150	19,180	19,220	19,250	19,280	19,320	19,350	19,390	19,420	19,460	19,490	19,530	19,560	19,590	19,630	19,660	6
7	22,710	22,750	22,800	22,840	22,890	22,930	22,970	23,020	23,060	23,100	23,150	23,190	23,230	23,270	23,310	23,360	23,400	23,440	23,480	23,520	23,560	7
8	26,420	26,460	26,510	26,560	26,610	26,660	26,710	26,760	26,810	26,860	26,910	26,960	27,000	27,050	27,100	27,150	27,200	27,240	27,290	27,340	27,390	8
9	30,180	30,230	30,290	30,340	30,400	30,450	30,500	30,560	30,610	30,670	30,720	30,770	30,830	30,880	30,930	30,990	31,040	31,090	31,150	31,200	31,250	9
10	33,910	33,970	34,030	34,090	34,150	34,210	34,270	34,330	34,390	34,450	34,500	34,560	34,620	34,680	34,740	34,800	34,860	34,910	34,970	35,030	35,090	10
11	37,640	37,700	37,760	37,830	37,890	37,960	38,020	38,080	38,150	38,210	38,270	38,340	38,400	38,460	38,530	38,590	38,650	38,710	38,780	38,840	38,900	11
12	41,180	41,250	41,320	41,390	41,450	41,520	41,590	41,660	41,730	41,800	41,870	41,940	42,010	42,070	42,140	42,210	42,280	42,350	42,410	42,480	42,550	12
13	44,660	44,730	44,810	44,880	44,960	45,030	45,110	45,180	45,250	45,330	45,400	45,480	45,550	45,620	45,700	45,770	45,840	45,920	45,990	46,060	46,140	13
14	48,120	48,200	48,280	48,360	48,440	48,520	48,600	48,680	48,760	48,830	48,910	48,990	49,070	49,150	49,230	49,310	49,380	49,460	49,540	49,620	49,690	14
15	51,500	51,590	51,670	51,760	51,840	51,930	52,010	52,100	52,180	52,270	52,350	52,440	52,520	52,600	52,690	52,770	52,860	52,940	53,020	53,110	53,190	15
16	54,850	54,940	55,030	55,120	55,210	55,300	55,390	55,480	55,570	55,660	55,750	55,840	55,930	56,020	56,110	56,200	56,290	56,380	56,470	56,550	56,640	16
17	59,930	60,030	60,140	60,240	60,340	60,440	60,550	60,650	60,750	60,860	60,960	61,060	61,160	61,270	61,370	61,470	61,570	61,670	61,770	61,870	61,970	17
18	65,010	65,130	65,240	65,360	65,470	65,590	65,710	65,820	65,940	66,050	66,170	66,280	66,400	66,510	66,630	66,740	66,850	66,970	67,080	67,190	67,300	18
19	70,090	70,220	70,350	70,480	70,610	70,740	70,860	70,990	71,120	71,250	71,380	71,500	71,630	71,760	71,880	72,010	72,140	72,260	72,390	72,510	72,630	19
20	74,930	75,070	75,210	75,340	75,480	75,620	75,750	75,890	76,020	76,160	76,300	76,430	76,570	76,700	76,840	76,970	77,100	77,240	77,370	77,500	77,630	20
21	79,770	79,910	80,060	80,210	80,350	80,500	80,640	80,790	80,930	81,070	81,220	81,360	81,500	81,650	81,790	81,930	82,070	82,210	82,350	82,490	82,630	21
22	84,600	84,760	84,910	85,070	85,220	85,380	85,530	85,680	85,830	85,990	86,140	86,290	86,440	86,590	86,740	86,890	87,040	87,190	87,340	87,490	87,630	22
23	91,070	91,200	91,330	91,470	91,600	91,730	91,850	91,980	92,110	92,240	92,360	92,490	92,620	92,740	92,860	92,990	93,110	93,230	93,350	93,480	93,600	23
24	97,530	97,640	97,750	97,860	97,970	98,070	98,180	98,280	98,390	98,490	98,590	98,690	98,790	98,890	98,990	99,090	99,180	99,280	99,370	99,460	99,560	24
25	104,000	104,100	104,200	104,300	104,300	104,400	104,500	104,600	104,700	104,700	104,800	104,900	105,000	105,000	105,100	105,200	105,300	105,300	105,400	105,500	105,500	25
26	105,100	105,300	105,500	105,700	105,900	106,100	106,300	106,500	106,700	106,900	107,100	107,200	107,400	107,600	107,800	108,000	108,200	108,400	108,600	108,800	109,000	26
27	106,200	106,500	106,800	107,100	107,400	107,700	108,000	108,400	108,700	109,000	109,300	109,600	109,900	110,200	110,500	110,900	111,200	111,500	111,800	112,100	112,400	27
28	107,200	107,700	108,100	108,500	108,900	109,400	109,800	110,200	110,700	111,100	111,500	112,000	112,400	112,800	113,300	113,700	114,100	114,600	115,000	115,400	115,900	28

GATE ARRANGEMENT	HEADWATER ELEVATION																				GATE ARRANGEMENT
	814.0	814.1	814.2	814.3	814.4	814.5	814.6	814.7	814.8	814.9	815.0	815.1	815.2	815.3	815.4	815.5	815.6	815.7	815.8	815.9	816.0	
1	2,810	2,810	2,820	2,820	2,830	2,830	2,840	2,840	2,850	2,850	2,860	2,860	2,870	2,870	2,880	2,880						1
2	6,040	6,050	6,070	6,080	6,090	6,100	6,110	6,120	6,130	6,140	6,150	6,160	6,170	6,180	6,190	6,200	6,210	6,220	6,230	6,240	6,250	2
3	9,380	9,400	9,410	9,430	9,450	9,460	9,480	9,490	9,510	9,530	9,540	9,560	9,570	9,590	9,600	9,620	9,640	9,650	9,670	9,680	9,700	3
4	12,800	12,820	12,850	12,870	12,890	12,920	12,940	12,960	12,990	13,010	13,030	13,050	13,080	13,100	13,120	13,150	13,170	13,190	13,220	13,240	13,260	4
5	16,410	16,440	16,470	16,500	16,530	16,560	16,590	16,620	16,650	16,680	16,700	16,730	16,760	16,790	16,820	16,850	16,880	16,910	16,930	16,960	16,990	5
6	19,660	19,700	19,730	19,770	19,800	19,830	19,870	19,900	19,930	19,970	20,000	20,030	20,070	20,100	20,130	20,170	20,200	20,230	20,260	20,300	20,330	6
7	23,560	23,600	23,640	23,680	23,720	23,760	23,800	23,840	23,880	23,920	23,960	24,000	24,040	24,070	24,110	24,150	24,190	24,230	24,270	24,310	24,350	7
8	27,390	27,440	27,480	27,530	27,580	27,630	27,670	27,720	27,770	27,810	27,860	27,910	27,960	28,000	28,050	28,100	28,140	28,190	28,240	28,290	28,330	8
9	31,250	31,300	31,360	31,410	31,460	31,510	31,570	31,620	31,670	31,720	31,770	31,830	31,880	31,930	31,980	32,040	32,090	32,140	32,190	32,240	32,300	9
10	35,090	35,150	35,200	35,260	35,320	35,380	35,430	35,490	35,550	35,610	35,660	35,720	35,780	35,840	35,890	35,950	36,010	36,060	36,120	36,180	36,240	10
11	38,900	38,960	39,020	39,090	39,150	39,210	39,270	39,330	39,390	39,460	39,520	39,580	39,640	39,700	39,760	39,820	39,880	39,940	40,010	40,070	40,130	11
12	42,550	42,620	42,680	42,750	42,820	42,890	42,950	43,020	43,090	43,150	43,220	43,290	43,350	43,420	43,490	43,560	43,620	43,690	43,760	43,820	43,890	12
13	46,140	46,210	46,280	46,350	46,430	46,500	46,570	46,640	46,710	46,790	46,860	46,930	47,000	47,070	47,150	47,220	47,290	47,360	47,430	47,500	47,580	13
14	49,690	49,770	49,850	49,930	50,000	50,080	50,160	50,240	50,310	50,390	50,470	50,540	50,620	50,700	50,770	50,850	50,930	51,010	51,080	51,160	51,240	14
15	53,190	53,270	53,360	53,440	53,520	53,600	53,690	53,770	53,850	53,930	54,020	54,100	54,180	54,260	54,340	54,420	54,510	54,590	54,670	54,750	54,830	15
16	56,640	56,730	56,820	56,910	57,000	57,080	57,170	57,260	57,350	57,430	57,520	57,610	57,700	57,780	57,870	57,950	58,040	58,130	58,210	58,300	58,380	16
17	61,970	62,070	62,170	62,270	62,370	62,470	62,570	62,670	62,770	62,860	62,960	63,060	63,150	63,250	63,340	63,440	63,530	63,630	63,720	63,810	63,900	17
18	67,300	67,420	67,530	67,640	67,750	67,860	67,970	68,080	68,180	68,290	68,400	68,500	68,610	68,710	68,820	68,920	69,020	69,120	69,220	69,320	69,420	18
19	72,630	72,760	72,880	73,000	73,120	73,240	73,360	73,480	73,600	73,720	73,840	73,950	74,070	74,180	74,290	74,400	74,510	74,620	74,730	74,840	74,940	19
20	77,630	77,770	77,900	78,030	78,160	78,290	78,410	78,540	78,670	78,800	78,920	79,050	79,170	79,300	79,420	79,540	79,660	79,780	79,900	80,020	80,140	20
21	82,630	82,770	82,910	83,050	83,190	83,330	83,460	83,600	83,740	83,870	84,010	84,140	84,280	84,410	84,540	84,680	84,810	84,940	85,070	85,200	85,330	21
22	87,630	87,780	87,930	88,080	88,220	88,370	88,510	88,660	88,810	88,950	89,100	89,240	89,380	89,530	89,670	89,810	89,960	90,100	90,240	90,380	90,520	22
23	93,600	93,720	93,850	93,980	94,110	94,230	94,360	94,480	94,610	94,730	94,860	94,980	95,100	95,220	95,350	95,470	95,590	95,710	95,830	95,950	96,060	23
24	99,560	99,670	99,780	99,880	99,990	100,100	100,200	100,300	100,400	100,500	100,600	100,700	100,800	100,900	101,000	101,100	101,200	101,300	101,400	101,500	101,600	24
25	105,500	105,600	105,700	105,800	105,900	106,000	106,000	106,100	106,200	106,300	106,400	106,500	106,500	106,600	106,700	106,800	106,900	106,900	107,000	107,100	107,100	25
26	109,000	109,200	109,400	109,600	109,800	110,000	110,200	110,400	110,600	110,800	111,200	111,200	111,300	111,300	111,400	111,500	111,500	111,600	111,600	111,700	111,700	26
27	112,400	112,700	113,100	113,400	113,700	114,000	114,300	114,700	115,000	115,300	116,000	116,000	116,000	116,100	116,100	116,100	116,200	116,200	116,200	116,200	116,300	27
28	115,900	116,300	116,700	117,200	117,600	118,000	118,500	118,900	119,400	119,800	120,800	120,800	120,800	120,800	120,800	120,800	120,800	120,800	120,800	120,800	120,800	28

HEADWATER 812 to 816
TAILWATER 784.51 to 785.5

See special instruction for preventing gate overflow on page 2.

MAY 2008

TELLICO DAM
SPILLWAY DISCHARGE
IN CUBIC FEET PER SECOND

GATE ARRANGEMENT	HEADWATER ELEVATION																				GATE ARRANGEMENT
	816.0	816.1	816.2	816.3	816.4	816.5	816.6	816.7	816.8	816.9	817.0	817.1	817.2	817.3	817.4	817.5	817.6	817.7	817.8	817.9	818.0	
1																						1
2	6,250	6,260	6,270																			2
3	9,700	9,710	9,730	9,750	9,760	9,780	9,790	9,810	9,820	9,840	9,850											3
4	13,260	13,290	13,310	13,330	13,350	13,380	13,400	13,420	13,450	13,470	13,490	13,700	14,060	14,530	15,080	15,700	16,400	17,150				4
5	16,990	17,020	17,050	17,080	17,100	17,130	17,160	17,190	17,210	17,240	17,270	17,480	17,850	18,320	18,870	19,500	20,200	20,960	21,780	22,650	23,580	5
6	20,330	20,360	20,390	20,430	20,460	20,490	20,520	20,550	20,580	20,620	20,650	20,860	21,230	21,710	22,260	22,900	23,600	24,360	25,190	26,070	27,000	6
7	24,350	24,380	24,420	24,460	24,500	24,540	24,580	24,620	24,650	24,690	24,730	24,960	25,330	25,810	26,380	27,020	27,730	28,500	29,330	30,220	31,160	7
8	28,330	28,380	28,430	28,470	28,520	28,570	28,620	28,660	28,710	28,760	28,810	29,040	29,430	29,920	30,490	31,140	31,860	32,640	33,480	34,380	35,330	8
9	32,300	32,350	32,400	32,450	32,510	32,560	32,610	32,670	32,720	32,770	32,820	33,060	33,450	33,950	34,530	35,180	35,910	36,700	37,540	38,440	39,400	9
10	36,240	36,290	36,350	36,410	36,470	36,520	36,580	36,640	36,690	36,750	36,810	37,050	37,450	37,950	38,530	39,190	39,920	40,710	41,560	42,470	43,430	10
11	40,130	40,190	40,250	40,310	40,370	40,430	40,490	40,550	40,610	40,680	40,740	40,980	41,380	41,880	42,470	43,140	43,870	44,660	45,510	46,420	47,390	11
12	43,890	43,960	44,020	44,090	44,160	44,220	44,290	44,360	44,420	44,490	44,560	44,810	45,220	45,720	46,320	46,990	47,730	48,530	49,390	50,300	51,270	12
13	47,580	47,650	47,720	47,790	47,860	47,930	48,000	48,080	48,150	48,220	48,290	48,540	48,960	49,470	50,070	50,740	51,480	52,290	53,150	54,070	55,040	13
14	51,240	51,310	51,390	51,470	51,540	51,620	51,700	51,770	51,850	51,930	52,000	52,260	52,680	53,200	53,800	54,480	55,230	56,040	56,910	57,840	58,810	14
15	54,830	54,910	54,990	55,070	55,150	55,230	55,310	55,390	55,470	55,550	55,630	55,890	56,310	56,830	57,440	58,120	58,870	59,680	60,550	61,480	62,460	15
16	58,380	58,470	58,550	58,640	58,720	58,810	58,890	58,970	59,060	59,140	59,230	59,490	59,920	60,440	61,050	61,740	62,490	63,300	64,180	65,110	66,090	16
17	63,900	63,990	64,090	64,180	64,270	64,350	64,440	64,530	64,620	64,710	64,790	65,060	65,490	66,020	66,630	67,310	68,070	68,880	69,760	70,690	71,680	17
18	69,420	69,520	69,620	69,710	69,810	69,900	69,990	70,090	70,180	70,270	70,360	70,630	71,060	71,590	72,200	72,890	73,650	74,470	75,340	76,270	77,260	18
19	74,940	75,050	75,150	75,250	75,350	75,450	75,550	75,640	75,740	75,830	75,930	76,200	76,630	77,160	77,780	78,470	79,230	80,050	80,920	81,860	82,840	19
20	80,140	80,250	80,370	80,490	80,600	80,720	80,830	80,940	81,050	81,160	81,270	81,570	82,010	82,560	83,200	83,910	84,680	85,520	86,420	87,370	88,370	20
21	85,330	85,460	85,590	85,720	85,850	85,980	86,110	86,240	86,370	86,490	86,620	86,930	87,400	87,960	88,620	89,340	90,130	90,990	91,910	92,880	93,900	21
22	90,520	90,670	90,810	90,960	91,100	91,250	91,390	91,540	91,680	91,830	91,970	92,300	92,780	93,360	94,030	94,780	95,590	96,460	97,400	98,390	99,430	22
23	96,060	96,210	96,350	96,490	96,630	96,770	96,920	97,060	97,200	97,330	97,470	97,800	98,270	98,850	99,520	100,300	101,100	101,900	102,900	103,800	104,900	23
24	101,600	101,700	101,900	102,000	102,200	102,300	102,400	102,600	102,700	102,800	103,000	103,300	103,800	104,300	105,000	105,700	106,500	107,400	108,300	109,300	110,300	24
25	107,100	107,300	107,400	107,600	107,700	107,800	108,000	108,100	108,200	108,400	108,500	108,800	109,300	109,800	110,500	111,200	112,000	112,900	113,800	114,800	115,800	25
26	111,700	111,800	111,900	112,000	112,100	112,200	112,300	112,400	112,500	112,500	112,600	112,900	113,300	113,900	114,500	115,200	115,900	116,800	117,600	118,600	119,600	26
27	116,300	116,300	116,400	116,400	116,500	116,500	116,600	116,600	116,700	116,700	116,800	117,000	117,400	117,900	118,500	119,100	119,900	120,700	121,500	122,400	123,300	27
28	120,800	120,800	120,900	120,900	120,900	120,900	120,900	120,900	120,900	120,900	120,900	121,100	121,500	121,900	122,500	123,100	123,800	124,500	125,300	126,200	127,100	28

GATE ARRANGEMENT	HEADWATER ELEVATION																				GATE ARRANGEMENT
	818.0	818.1	818.2	818.3	818.4	818.5	818.6	818.7	818.8	818.9	819.0	819.1	819.2	819.3	819.4	819.5	819.6	819.7	819.8	819.9	820.0	
1																						1
2																						2
3																						3
4																						4
5	23,580	24,560	25,600	26,680	27,800																	5
6	27,000	27,980	29,020	30,100	31,240	32,410	33,640	34,900	36,210	37,570	38,960	40,400										6
7	31,160	32,160	33,200	34,290	35,430	36,620	37,850	39,130	40,450	41,810	43,210	44,660	46,140	47,670	49,230	50,840	52,480	54,160	55,880			7
8	35,330	36,330	37,380	38,490	39,640	40,830	42,070	43,360	44,680	46,060	47,470	48,920	50,420	51,950	53,530	55,140	56,790	58,480	60,210	61,970	63,770	8
9	39,400	40,410	41,470	42,570	43,730	44,930	46,180	47,470	48,800	50,180	51,600	53,060	54,560	56,100	57,680	59,300	60,950	62,650	64,380	66,150	67,960	9
10	43,430	44,440	45,500	46,610	47,770	48,980	50,230	51,520	52,860	54,240	55,660	57,130	58,630	60,180	61,760	63,380	65,040	66,740	68,480	70,250	72,060	10
11	47,390	48,400	49,470	50,590	51,750	52,960	54,210	55,510	56,850	58,230	59,660	61,120	62,630	64,180	65,760	67,390	69,050	70,760	72,500	74,270	76,090	11
12	51,270	52,290	53,370	54,490	55,650	56,870	58,130	59,430	60,780	62,170	63,600	65,070	66,590	68,140	69,730	71,370	73,040	74,740	76,490	78,270	80,090	12
13	55,040	56,070	57,150	58,270	59,440	60,660	61,930	63,230	64,580	65,980	67,410	68,890	70,410	71,960	73,560	75,200	76,870	78,580	80,330	82,120	83,940	13
14	58,810	59,850	60,930	62,060	63,240	64,460	65,730	67,040	68,400	69,800	71,240	72,720	74,250	75,810	77,410	79,050	80,730	82,450	84,210	86,000	87,830	14
15	62,460	63,490	64,570	65,710	66,890	68,110	69,380	70,700	72,050	73,450	74,900	76,380	77,900	79,470	81,070	82,710	84,390	86,110	87,870	89,660	91,490	15
16	66,090	67,130	68,220	69,350	70,540	71,760	73,040	74,360	75,720	77,120	78,570	80,050	81,580	83,150	84,750	86,400	88,080	89,800	91,560	93,360	95,190	16
17	71,680	72,710	73,800	74,940	76,120	77,350	78,620	79,940	81,300	82,700	84,140	85,630	87,150	88,720	90,320	91,970	93,650	95,370	97,120	98,920	100,700	17
18	77,260	78,300	79,380	80,520	81,700	82,930	84,200	85,520	86,880	88,280	89,720	91,200	92,730	94,290	95,890	97,530	99,210	100,900	102,700	104,500	106,300	18
19	82,840	83,880	84,970	86,100	87,280	88,510	89,780	91,100	92,460	93,860	95,300	96,780	98,300	99,860	101,500	103,100	104,800	106,500	108,200	110,000	111,900	19
20	88,370	89,430	90,540	91,690	92,890	94,140	95,430	96,770	98,140	99,560	101,000	102,500	104,100	105,700	107,300	108,900	110,600	112,400	114,100	116,000	117,800	20
21	93,900	94,980	96,100	97,280	98,500	99,770	101,100	102,400	103,800	105,300	106,800	108,300	109,800	111,400	113,100	114,800	116,500	118,200	120,000	121,900	123,700	21
22	99,430	100,500	101,700	102,900	104,100	105,400	106,700	108,100	109,500	111,000	112,500	114,000	115,600	117,200	118,900	120,600	122,300	124,100	125,900	127,800	129,700	22
23	104,900	106,000	107,100	108,300	109,600	110,900	112,200	113,600	115,000	116,500	118,000	119,500	121,100	122,800	124,400	126,100	127,900	129,700	131,500	133,300	135,200	23
24	110,300	111,500	112,600	113,800	115,100	116,400	117,700	119,100	120,500	122,000	123,500	125,000	126,600	128,300	129,900	131,700	133,400	135,200	137,000	138,900	140,800	24
25	115,800	116,900	118,100	119,300	120,500	121,800	123,200	124,600	126,000	127,500	129,000	130,600	132,200	133,800	135,500	137,200	138,900	140,700	142,600	144,400	146,300	25
26	119,600	120,700	121,900	123,100	124,400	125,700	127,100	128,500	129,900	131,400	133,000	134,500	136,100	137,800	139,500	141,200	143,000	144,800	146,700	148,500	150,500	26
27	123,300	124,500	125,700	126,900	128,200	129,600	130,900	132,400	133,800	135,300	136,900	138,500	140,100	141,800	143,500	145,300	147,100	148,900	150,700	152,600	154,600	27
28	127,100	128,300	129,500	130,800	132,100	133,400	134,800	136,300	137,800	139,300	140,900	142,500	144,100	145,800	147,500	149,300	151,100	153,000	154,800	156,800	158,700	28

MAY 2008

See special instruction for preventing gate overflow on page 2.

HEADWATER 816 to 820
TAILWATER 784.51 to 785.5

TELLICO DAM
SPILLWAY DISCHARGE
IN CUBIC FEET PER SECOND

HEADWATER ELEVATION

GATE ARRANGEMENT	800.0	800.1	800.2	800.3	800.4	800.5	800.6	800.7	800.8	800.9	801.0	801.1	801.2	801.3	801.4	801.5	801.6	801.7	801.8	801.9	802.0	GATE ARRANGEMENT
1	1,950	1,960	1,970	1,970	1,980	1,990	1,990	2,000	2,010	2,010	2,020	2,030	2,030	2,040	2,050	2,050	2,060	2,070	2,070	2,080	2,090	1
2	4,200	4,210	4,230	4,240	4,260	4,270	4,290	4,300	4,310	4,330	4,340	4,360	4,370	4,390	4,400	4,420	4,430	4,440	4,460	4,470	4,490	2
3	6,500	6,530	6,550	6,570	6,600	6,620	6,640	6,660	6,690	6,710	6,730	6,750	6,780	6,800	6,820	6,840	6,870	6,890	6,910	6,930	6,950	3
4	8,780	8,810	8,840	8,870	8,910	8,940	8,970	9,000	9,030	9,060	9,090	9,120	9,160	9,190	9,220	9,250	9,280	9,310	9,340	9,370	9,400	4
5	11,310	11,350	11,390	11,420	11,460	11,500	11,540	11,580	11,620	11,650	11,690	11,730	11,770	11,810	11,850	11,880	11,920	11,960	12,000	12,040	12,080	5
6	13,690	13,740	13,780	13,830	13,870	13,910	13,960	14,000	14,050	14,090	14,130	14,180	14,220	14,270	14,310	14,360	14,400	14,440	14,490	14,530	14,580	6
7	16,290	16,340	16,400	16,450	16,510	16,560	16,620	16,670	16,730	16,780	16,840	16,890	16,950	17,000	17,050	17,110	17,160	17,220	17,270	17,320	17,380	7
8	18,830	18,890	18,960	19,020	19,080	19,150	19,210	19,280	19,340	19,410	19,470	19,540	19,600	19,670	19,730	19,790	19,860	19,920	19,990	20,050	20,120	8
9	21,730	21,800	21,870	21,950	22,020	22,090	22,160	22,240	22,310	22,380	22,450	22,520	22,600	22,670	22,740	22,810	22,880	22,960	23,030	23,100	23,170	9
10	24,660	24,740	24,820	24,900	24,980	25,060	25,140	25,220	25,300	25,380	25,460	25,540	25,620	25,700	25,780	25,860	25,940	26,020	26,100	26,170	26,250	10
11	27,630	27,720	27,810	27,890	27,980	28,070	28,150	28,240	28,330	28,420	28,500	28,590	28,680	28,760	28,850	28,930	29,020	29,110	29,190	29,280	29,360	11
12	30,560	30,650	30,750	30,840	30,930	31,030	31,120	31,210	31,300	31,400	31,490	31,580	31,670	31,770	31,860	31,950	32,040	32,130	32,220	32,310	32,400	12
13	33,510	33,610	33,710	33,810	33,910	34,010	34,110	34,200	34,300	34,400	34,500	34,590	34,690	34,790	34,890	34,980	35,080	35,180	35,270	35,370	35,470	13
14	36,460	36,570	36,670	36,780	36,880	36,980	37,090	37,190	37,300	37,400	37,500	37,600	37,710	37,810	37,910	38,010	38,120	38,220	38,320	38,420	38,520	14
15	39,420	39,530	39,640	39,750	39,860	39,970	40,080	40,190	40,300	40,400	40,510	40,620	40,730	40,830	40,940	41,050	41,160	41,260	41,370	41,470	41,580	15
16	42,350	42,460	42,580	42,690	42,810	42,920	43,030	43,150	43,260	43,370	43,490	43,600	43,710	43,820	43,930	44,050	44,160	44,270	44,380	44,490	44,600	16
17	46,440	46,560	46,680	46,790	46,910	47,030	47,150	47,260	47,380	47,490	47,610	47,720	47,840	47,950	48,060	48,180	48,290	48,400	48,520	48,630	48,740	17
18	50,530	50,650	50,780	50,900	51,020	51,140	51,260	51,370	51,490	51,610	51,730	51,850	51,960	52,080	52,190	52,310	52,420	52,540	52,650	52,770	52,880	18
19	54,620	54,750	54,870	55,000	55,120	55,250	55,370	55,490	55,610	55,730	55,850	55,970	56,090	56,210	56,320	56,440	56,560	56,670	56,790	56,910	57,020	19
20	56,120	56,330	56,530	56,740	56,950	57,150	57,360	57,560	57,770	57,970	58,180	58,380	58,580	58,790	58,990	59,200	59,400	59,600	59,810	60,010	60,220	20
21	57,620	57,910	58,190	58,480	58,770	59,060	59,350	59,640	59,920	60,210	60,500	60,790	61,080	61,370	61,660	61,950	62,240	62,530	62,830	63,120	63,410	21
22	59,110	59,480	59,850	60,220	60,590	60,960	61,340	61,710	62,080	62,450	62,830	63,200	63,580	63,950	64,330	64,710	65,090	65,460	65,840	66,220	66,600	22
23	59,110	59,480	59,850	60,220	60,590	60,960	61,340	61,710	62,080	62,450	62,830	63,200	63,580	63,950	64,330	64,710	65,090	65,460	65,840	66,220	66,600	23
24	59,110	59,480	59,850	60,220	60,590	60,960	61,340	61,710	62,080	62,450	62,830	63,200	63,580	63,950	64,330	64,710	65,090	65,460	65,840	66,220	66,600	24
25	59,110	59,480	59,850	60,220	60,590	60,960	61,340	61,710	62,080	62,450	62,830	63,200	63,580	63,950	64,330	64,710	65,090	65,460	65,840	66,220	66,600	25
26	59,110	59,480	59,850	60,220	60,590	60,960	61,340	61,710	62,080	62,450	62,830	63,200	63,580	63,950	64,330	64,710	65,090	65,460	65,840	66,220	66,600	26
27	59,110	59,480	59,850	60,220	60,590	60,960	61,340	61,710	62,080	62,450	62,830	63,200	63,580	63,950	64,330	64,710	65,090	65,460	65,840	66,220	66,600	27
28	59,110	59,480	59,850	60,220	60,590	60,960	61,340	61,710	62,080	62,450	62,830	63,200	63,580	63,950	64,330	64,710	65,090	65,460	65,840	66,220	66,600	28

HEADWATER ELEVATION

GATE ARRANGEMENT	802.0	802.1	802.2	802.3	802.4	802.5	802.6	802.7	802.8	802.9	803.0	803.1	803.2	803.3	803.4	803.5	803.6	803.7	803.8	803.9	804.0	GATE ARRANGEMENT
1	2,090	2,090	2,100	2,110	2,110	2,120	2,120	2,130	2,140	2,140	2,150	2,160	2,160	2,170	2,180	2,180	2,190	2,190	2,200	2,210	2,210	1
2	4,490	4,500	4,510	4,530	4,540	4,560	4,570	4,580	4,600	4,610	4,620	4,640	4,650	4,670	4,680	4,690	4,710	4,720	4,730	4,750	4,760	2
3	6,950	6,970	7,000	7,020	7,040	7,060	7,080	7,100	7,120	7,150	7,170	7,190	7,210	7,230	7,250	7,270	7,290	7,310	7,330	7,350	7,370	3
4	9,400	9,430	9,460	9,490	9,520	9,550	9,580	9,610	9,640	9,670	9,700	9,730	9,760	9,790	9,820	9,850	9,880	9,910	9,930	9,960	9,990	4
5	12,080	12,110	12,150	12,190	12,230	12,260	12,300	12,340	12,380	12,410	12,450	12,490	12,530	12,560	12,600	12,640	12,680	12,710	12,750	12,790	12,820	5
6	14,580	14,620	14,660	14,710	14,750	14,790	14,840	14,880	14,920	14,970	15,010	15,050	15,100	15,140	15,180	15,230	15,270	15,310	15,350	15,400	15,440	6
7	17,380	17,430	17,490	17,540	17,590	17,650	17,700	17,750	17,800	17,860	17,910	17,960	18,010	18,060	18,120	18,170	18,220	18,270	18,320	18,370	18,420	7
8	20,120	20,180	20,240	20,310	20,370	20,430	20,500	20,560	20,620	20,680	20,750	20,810	20,870	20,930	21,000	21,060	21,120	21,180	21,240	21,300	21,360	8
9	23,170	23,240	23,310	23,380	23,450	23,520	23,590	23,660	23,730	23,800	23,870	23,940	24,010	24,080	24,150	24,220	24,290	24,350	24,420	24,490	24,560	9
10	26,250	26,330	26,410	26,490	26,560	26,640	26,720	26,800	26,870	26,950	27,030	27,100	27,180	27,260	27,330	27,410	27,480	27,560	27,630	27,700	27,780	10
11	29,360	29,450	29,530	29,620	29,700	29,790	29,870	29,950	30,040	30,120	30,200	30,290	30,370	30,450	30,530	30,620	30,700	30,780	30,860	30,940	31,020	11
12	32,400	32,500	32,590	32,680	32,770	32,860	32,950	33,040	33,130	33,210	33,300	33,390	33,480	33,570	33,660	33,740	33,830	33,920	34,010	34,090	34,180	12
13	35,470	35,560	35,660	35,750	35,850	35,940	36,040	36,130	36,230	36,320	36,420	36,510	36,610	36,700	36,790	36,890	36,980	37,070	37,160	37,260	37,350	13
14	38,520	38,620	38,720	38,820	38,920	39,020	39,120	39,220	39,320	39,420	39,520	39,620	39,720	39,820	39,920	40,020	40,110	40,210	40,310	40,410	40,500	14
15	41,580	41,690	41,790	41,900	42,000	42,110	42,210	42,320	42,420	42,530	42,630	42,730	42,840	42,940	43,050	43,150	43,250	43,350	43,460	43,560	43,660	15
16	44,600	44,710	44,820	44,930	45,040	45,150	45,260	45,370	45,480	45,590	45,700	45,810	45,910	46,020	46,130	46,240	46,350	46,460	46,560	46,670	46,780	16
17	48,740	48,850	48,970	49,080	49,190	49,300	49,410	49,530	49,640	49,750	49,860	49,970	50,090	50,200	50,310	50,420	50,530	50,650	50,760	50,870	50,990	17
18	52,880	53,000	53,110	53,230	53,340	53,460	53,570	53,680	53,800	53,910	54,030	54,140	54,260	54,370	54,490	54,610	54,720	54,840	54,960	55,070	55,190	18
19	57,020	57,140	57,260	57,370	57,490	57,610	57,720	57,840	57,960	58,080	58,190	58,310	58,430	58,550	58,670	58,790	58,910	59,030	59,150	59,280	59,400	19
20	60,220	60,420	60,630	60,830	61,040	61,240	61,450	61,650	61,860	62,070	62,270	62,480	62,690	62,900	63,100	63,310	63,520	63,730	63,950	64,160	64,370	20
21	63,410	63,700	63,990	64,290	64,580	64,870	65,170	65,460	65,760	66,050	66,350	66,650	66,940	67,240	67,540	67,840	68,140	68,440	68,740	69,040	69,340	21
22	66,600	66,980	67,360	67,740	68,130	68,510	68,890	69,280	69,660	70,040	70,430	70,820	71,200	71,590	71,980	72,360	72,750	73,140	73,530	73,920	74,310	22
23	66,600	66,980	67,360	67,740	68,130	68,510	68,890	69,280	69,660	70,040	70,430	70,820	71,200	71,590	71,980	72,360	72,750	73,140	73,530	73,920	74,310	23
24	66,600	66,980	67,360	67,740	68,130	68,510	68,890	69,280	69,660	70,040	70,430	70,820	71,200	71,590	71,980	72,360	72,750	73,140	73,530	73,920	74,310	24
25	66,600	66,980	67,360	67,740	68,130	68,510	68,890	69,280	69,660	70,040	70,430	70,820	71,200	71,590	71,980	72,360	72,750	73,140	73,530	73,920	74,310	25
26	66,600	66,980	67,360	67,740	68,130	68,510	68,890	69,280	69,660	70,040	70,430	70,820	71,200	71,590	71,980	72,360	72,750	73,140	73,530	73,920	74,310	26
27	66,600	66,980	67,360	67,740	68,130	68,510	68,890	69,280	69,660	70,040	70,430	70,820	71,200	71,590	71,980	72,360	72,750	73,140	73,530	73,920	74,310	27
28	66,600	66,980	67,360	67,740	68,130	68,510	68,890	69,280	69,660	70,040	70,430	70,820	71,200	71,590	71,980	72,360	72,750	73,140	73,530	73,920	74,310	28

HEADWATER 800 to 804
TAILWATER 785.51 to 786.5

MAY 2008

TELLICO DAM
SPILLWAY DISCHARGE
IN CUBIC FEET PER SECOND

HEADWATER ELEVATION

GATE ARRANGEMENT	804.0	804.1	804.2	804.3	804.4	804.5	804.6	804.7	804.8	804.9	805.0	805.1	805.2	805.3	805.4	805.5	805.6	805.7	805.8	805.9	806.0	GATE ARRANGEMENT
1	2,210	2,220	2,220	2,230	2,240	2,240	2,250	2,260	2,260	2,270	2,270	2,280	2,290	2,290	2,300	2,300	2,310	2,310	2,320	2,330	2,330	1
2	4,760	4,770	4,780	4,800	4,810	4,820	4,840	4,850	4,860	4,880	4,890	4,900	4,910	4,930	4,940	4,950	4,970	4,980	4,990	5,000	5,020	2
3	7,370	7,400	7,420	7,440	7,460	7,480	7,500	7,520	7,540	7,560	7,580	7,600	7,620	7,640	7,660	7,680	7,700	7,720	7,730	7,750	7,770	3
4	9,990	10,020	10,050	10,080	10,110	10,140	10,160	10,190	10,220	10,250	10,280	10,310	10,330	10,360	10,390	10,420	10,440	10,470	10,500	10,530	10,550	4
5	12,820	12,860	12,890	12,930	12,970	13,000	13,040	13,070	13,110	13,140	13,180	13,220	13,250	13,290	13,320	13,360	13,390	13,420	13,460	13,490	13,530	5
6	15,440	15,480	15,520	15,570	15,610	15,650	15,690	15,730	15,770	15,820	15,860	15,900	15,940	15,980	16,020	16,060	16,100	16,140	16,180	16,220	16,270	6
7	18,420	18,470	18,520	18,570	18,620	18,660	18,710	18,760	18,810	18,860	18,900	18,950	19,000	19,040	19,090	19,140	19,180	19,230	19,280	19,320	19,370	7
8	21,360	21,420	21,480	21,540	21,600	21,660	21,720	21,780	21,830	21,890	21,950	22,010	22,070	22,120	22,180	22,240	22,290	22,350	22,410	22,460	22,520	8
9	24,560	24,620	24,690	24,760	24,820	24,890	24,950	25,020	25,090	25,150	25,210	25,280	25,340	25,410	25,470	25,530	25,600	25,660	25,720	25,790	25,850	9
10	27,780	27,850	27,930	28,000	28,070	28,140	28,220	28,290	28,360	28,430	28,500	28,570	28,640	28,710	28,780	28,850	28,920	28,990	29,060	29,130	29,200	10
11	31,020	31,100	31,180	31,260	31,340	31,420	31,490	31,570	31,650	31,730	31,810	31,880	31,960	32,040	32,110	32,190	32,260	32,340	32,410	32,490	32,560	11
12	34,180	34,260	34,350	34,430	34,520	34,600	34,690	34,770	34,860	34,940	35,020	35,110	35,190	35,270	35,360	35,440	35,520	35,600	35,680	35,760	35,850	12
13	37,350	37,440	37,530	37,620	37,710	37,800	37,890	37,980	38,070	38,160	38,250	38,340	38,430	38,520	38,610	38,700	38,780	38,870	38,960	39,050	39,130	13
14	40,500	40,600	40,700	40,800	40,890	40,990	41,080	41,180	41,280	41,370	41,470	41,560	41,660	41,750	41,840	41,940	42,030	42,130	42,220	42,310	42,410	14
15	43,660	43,760	43,870	43,970	44,070	44,170	44,270	44,370	44,480	44,580	44,680	44,780	44,880	44,980	45,080	45,180	45,280	45,380	45,480	45,570	45,670	15
16	46,780	46,890	46,990	47,100	47,210	47,320	47,420	47,530	47,640	47,740	47,850	47,960	48,060	48,170	48,280	48,380	48,490	48,590	48,700	48,800	48,910	16
17	50,990	51,100	51,210	51,330	51,440	51,550	51,670	51,780	51,900	52,010	52,130	52,240	52,360	52,470	52,590	52,700	52,820	52,930	53,050	53,160	53,280	17
18	55,190	55,310	55,430	55,550	55,670	55,790	55,910	56,030	56,160	56,280	56,400	56,530	56,650	56,770	56,900	57,020	57,150	57,270	57,400	57,520	57,650	18
19	59,400	59,520	59,650	59,770	59,900	60,030	60,160	60,290	60,420	60,550	60,680	60,810	60,940	61,070	61,210	61,340	61,480	61,610	61,750	61,880	62,020	19
20	64,370	64,570	64,720	64,880	65,040	65,190	65,350	65,510	65,670	65,830	65,980	66,140	66,300	66,460	66,620	66,780	66,940	67,100	67,260	67,410	67,570	20
21	69,340	69,610	69,800	69,980	70,170	70,360	70,540	70,730	70,920	71,100	71,290	71,480	71,660	71,850	72,030	72,210	72,400	72,580	72,770	72,950	73,130	21
22	74,310	74,650	74,870	75,090	75,310	75,520	75,740	75,950	76,170	76,380	76,600	76,810	77,020	77,230	77,440	77,650	77,860	78,070	78,280	78,480	78,690	22
23	74,310	74,670	74,940	75,220	75,500	75,770	76,050	76,320	76,600	76,870	77,150	77,420	77,690	77,970	78,240	78,510	78,780	79,060	79,330	79,600	79,870	23
24	74,310	74,680	75,020	75,350	75,690	76,020	76,360	76,690	77,030	77,360	77,690	78,030	78,360	78,700	79,040	79,370	79,710	80,040	80,380	80,710	81,050	24
25	74,310	74,700	75,090	75,490	75,880	76,270	76,670	77,060	77,450	77,850	78,240	78,640	79,040	79,430	79,830	80,230	80,630	81,030	81,430	81,830	82,230	25
26	74,310	74,700	75,090	75,490	75,880	76,270	76,670	77,060	77,450	77,850	78,240	78,640	79,040	79,430	79,830	80,230	80,630	81,030	81,430	81,830	82,230	26
27	74,310	74,700	75,090	75,490	75,880	76,270	76,670	77,060	77,450	77,850	78,240	78,640	79,040	79,430	79,830	80,230	80,630	81,030	81,430	81,830	82,230	27
28	74,310	74,700	75,090	75,490	75,880	76,270	76,670	77,060	77,450	77,850	78,240	78,640	79,040	79,430	79,830	80,230	80,630	81,030	81,430	81,830	82,230	28

HEADWATER ELEVATION

GATE ARRANGEMENT	806.0	806.1	806.2	806.3	806.4	806.5	806.6	806.7	806.8	806.9	807.0	807.1	807.2	807.3	807.4	807.5	807.6	807.7	807.8	807.9	808.0	GATE ARRANGEMENT
1	2,330	2,340	2,340	2,350	2,360	2,360	2,370	2,370	2,380	2,380	2,390	2,400	2,400	2,410	2,410	2,420	2,420	2,430	2,430	2,440	2,450	1
2	5,020	5,030	5,040	5,050	5,070	5,080	5,090	5,100	5,120	5,130	5,140	5,150	5,160	5,180	5,190	5,200	5,210	5,220	5,240	5,250	5,260	2
3	7,770	7,790	7,810	7,830	7,850	7,870	7,890	7,910	7,930	7,950	7,970	7,980	8,000	8,020	8,040	8,060	8,080	8,100	8,120	8,130	8,150	3
4	10,550	10,580	10,610	10,640	10,660	10,690	10,720	10,740	10,770	10,800	10,820	10,850	10,880	10,900	10,930	10,960	10,980	11,010	11,040	11,060	11,090	4
5	13,530	13,560	13,600	13,630	13,660	13,700	13,730	13,770	13,800	13,830	13,870	13,900	13,930	13,970	14,000	14,030	14,060	14,100	14,130	14,160	14,190	5
6	16,270	16,310	16,350	16,390	16,430	16,470	16,510	16,540	16,580	16,620	16,660	16,700	16,740	16,780	16,820	16,860	16,900	16,940	16,980	17,010	17,050	6
7	19,370	19,410	19,460	19,500	19,550	19,600	19,640	19,690	19,730	19,780	19,820	19,870	19,910	19,960	20,000	20,050	20,090	20,140	20,180	20,230	20,280	7
8	22,520	22,580	22,630	22,690	22,740	22,800	22,850	22,910	22,960	23,020	23,070	23,120	23,180	23,230	23,290	23,340	23,390	23,450	23,500	23,550	23,610	8
9	25,850	25,910	25,970	26,030	26,100	26,160	26,220	26,280	26,340	26,400	26,460	26,520	26,580	26,640	26,700	26,760	26,820	26,890	26,940	27,000	27,060	9
10	29,200	29,260	29,330	29,400	29,470	29,540	29,600	29,670	29,740	29,810	29,870	29,940	30,010	30,070	30,140	30,200	30,270	30,340	30,400	30,470	30,530	10
11	32,560	32,640	32,710	32,790	32,860	32,930	33,010	33,080	33,150	33,230	33,300	33,370	33,450	33,520	33,590	33,660	33,730	33,810	33,880	33,950	34,020	11
12	35,850	35,930	36,010	36,090	36,170	36,250	36,330	36,410	36,490	36,570	36,650	36,720	36,800	36,880	36,960	37,040	37,120	37,200	37,270	37,350	37,430	12
13	39,130	39,220	39,310	39,400	39,480	39,570	39,650	39,740	39,820	39,910	40,000	40,080	40,160	40,250	40,330	40,420	40,500	40,590	40,670	40,750	40,840	13
14	42,410	42,500	42,590	42,680	42,780	42,870	42,960	43,050	43,140	43,230	43,330	43,420	43,510	43,600	43,690	43,780	43,870	43,960	44,050	44,140	44,230	14
15	45,670	45,770	45,870	45,970	46,070	46,160	46,260	46,360	46,450	46,550	46,650	46,740	46,840	46,940	47,030	47,130	47,220	47,320	47,410	47,500	47,600	15
16	48,910	49,010	49,120	49,220	49,330	49,430	49,530	49,640	49,740	49,840	49,940	50,050	50,150	50,250	50,350	50,450	50,550	50,650	50,750	50,850	50,950	16
17	53,280	53,390	53,510	53,620	53,740	53,850	53,970	54,080	54,200	54,310	54,430	54,540	54,650	54,770	54,880	54,990	55,110	55,220	55,330	55,440	55,550	17
18	57,650	57,770	57,900	58,020	58,150	58,280	58,400	58,530	58,650	58,780	58,910	59,030	59,160	59,280	59,410	59,530	59,660	59,780	59,910	60,030	60,160	18
19	62,020	62,150	62,290	62,430	62,560	62,700	62,840	62,970	63,110	63,250	63,390	63,520	63,660	63,800	63,940	64,070	64,210	64,350	64,480	64,620	64,760	19
20	67,570	67,690	67,810	67,930	68,050	68,170	68,280	68,400	68,520	68,630	68,750	68,870	68,980	69,100	69,210	69,320	69,440	69,550	69,660	69,780	69,890	20
21	73,130	73,230	73,330	73,430	73,530	73,630	73,730	73,830	73,920	74,020	74,110	74,210	74,300	74,390	74,490	74,580	74,670	74,760	74,840	74,930	75,020	21
22	78,690	78,770	78,860	78,940	79,020	79,100	79,180	79,250	79,330	79,400	79,480	79,550	79,620	79,690	79,760	79,830	79,890	79,960	80,020	80,090	80,150	22
23	79,870	80,060	80,250	80,440	80,620	80,810	81,000	81,180	81,370	81,550	81,740	81,920	82,100	82,290	82,470	82,650	82,830	83,010	83,190	83,370	83,540	23
24	81,050	81,340	81,640	81,930	82,230	82,520	82,820	83,110	83,410	83,700	84,000	84,290	84,590	84,880	85,180	85,470	85,760	86,060	86,350	86,650	86,940	24
25	82,230	82,630	83,030	83,430	83,830	84,240	84,640	85,040	85,450	85,850	86,260	86,660	87,070	87,480	87,880	88,290	88,700	89,110	89,520	89,930	90,340	25
26	82,230	82,630	83,030	83,430	83,830	84,240	84,640	85,040	85,450	85,850	86,260	86,660	87,070	87,480	87,880	88,290	88,700	89,110	89,520	89,930	90,340	26
27	82,230	82,630	83,030	83,430	83,830	84,240	84,640	85,040	85,450	85,850	86,260	86,660	87,070	87,480	87,880	88,290	88,700	89,110	89,520	89,930	90,340	27
28	82,230	82,630	83,030	83,430	83,830	84,240	84,640	85,040	85,450	85,850	86,260	86,660	87,070	87,480	87,880	88,290	88,700	89,110	89,520	89,930	90,340	28

MAY 2008

HEADWATER 804 to 808
TAILWATER 785.51 to 786.5

TELLICO DAM
SPILLWAY DISCHARGE
IN CUBIC FEET PER SECOND

GATE ARRANGEMENT	HEADWATER ELEVATION																				GATE ARRANGEMENT
	808.0	808.1	808.2	808.3	808.4	808.5	808.6	808.7	808.8	808.9	809.0	809.1	809.2	809.3	809.4	809.5	809.6	809.7	809.8	809.9	810.0	
1	2,450	2,450	2,460	2,460	2,470	2,470	2,480	2,480	2,490	2,500	2,500	2,510	2,510	2,520	2,520	2,530	2,530	2,540	2,540	2,550	2,550	1
2	5,260	5,270	5,280	5,300	5,310	5,320	5,330	5,340	5,360	5,370	5,380	5,390	5,400	5,410	5,430	5,440	5,450	5,460	5,470	5,480	5,490	2
3	8,150	8,170	8,190	8,210	8,230	8,250	8,260	8,280	8,300	8,320	8,340	8,350	8,370	8,390	8,410	8,430	8,440	8,460	8,480	8,500	8,520	3
4	11,090	11,110	11,140	11,170	11,190	11,220	11,240	11,270	11,290	11,320	11,350	11,370	11,400	11,420	11,450	11,470	11,500	11,520	11,550	11,570	11,600	4
5	14,190	14,230	14,260	14,290	14,320	14,360	14,390	14,420	14,450	14,490	14,520	14,550	14,580	14,610	14,640	14,680	14,710	14,740	14,770	14,800	14,830	5
6	17,050	17,090	17,130	17,170	17,210	17,250	17,280	17,320	17,360	17,400	17,440	17,470	17,510	17,550	17,590	17,620	17,660	17,700	17,740	17,770	17,810	6
7	20,280	20,320	20,370	20,410	20,460	20,510	20,550	20,600	20,640	20,690	20,740	20,780	20,830	20,880	20,920	20,970	21,020	21,060	21,110	21,160	21,200	7
8	23,610	23,660	23,710	23,770	23,820	23,870	23,920	23,980	24,030	24,080	24,130	24,190	24,240	24,290	24,340	24,390	24,450	24,500	24,550	24,600	24,650	8
9	27,060	27,120	27,180	27,240	27,300	27,360	27,420	27,480	27,540	27,600	27,660	27,720	27,780	27,830	27,890	27,950	28,010	28,070	28,130	28,190	28,240	9
10	30,530	30,600	30,670	30,730	30,800	30,860	30,930	30,990	31,060	31,120	31,190	31,250	31,320	31,380	31,450	31,510	31,580	31,640	31,710	31,770	31,840	10
11	34,020	34,100	34,170	34,240	34,310	34,380	34,450	34,530	34,600	34,670	34,740	34,810	34,880	34,950	35,020	35,100	35,170	35,240	35,310	35,380	35,450	11
12	37,430	37,510	37,580	37,660	37,740	37,820	37,890	37,970	38,050	38,120	38,200	38,280	38,350	38,430	38,510	38,580	38,660	38,740	38,810	38,890	38,960	12
13	40,840	40,920	41,000	41,080	41,170	41,250	41,330	41,410	41,500	41,580	41,660	41,740	41,820	41,900	41,990	42,070	42,150	42,230	42,310	42,390	42,470	13
14	44,230	44,310	44,400	44,490	44,580	44,670	44,760	44,840	44,930	45,020	45,100	45,190	45,280	45,370	45,450	45,540	45,620	45,710	45,800	45,880	45,970	14
15	47,600	47,690	47,790	47,880	47,970	48,060	48,160	48,250	48,340	48,430	48,520	48,620	48,710	48,800	48,890	48,980	49,070	49,160	49,250	49,340	49,430	15
16	50,950	51,050	51,150	51,250	51,350	51,440	51,540	51,640	51,740	51,830	51,930	52,020	52,120	52,220	52,310	52,410	52,500	52,590	52,690	52,780	52,880	16
17	55,550	55,670	55,780	55,890	56,000	56,110	56,220	56,330	56,430	56,540	56,650	56,760	56,870	56,980	57,080	57,190	57,300	57,400	57,510	57,610	57,720	17
18	60,160	60,280	60,400	60,520	60,650	60,770	60,890	61,010	61,130	61,250	61,370	61,490	61,610	61,730	61,850	61,970	62,090	62,210	62,330	62,450	62,570	18
19	64,760	64,890	65,030	65,160	65,300	65,430	65,560	65,700	65,830	65,960	66,100	66,230	66,360	66,490	66,630	66,760	66,890	67,020	67,150	67,280	67,410	19
20	69,890	70,020	70,150	70,280	70,410	70,540	70,670	70,800	70,930	71,050	71,180	71,310	71,430	71,560	71,680	71,810	71,930	72,060	72,180	72,310	72,430	20
21	75,020	75,140	75,270	75,400	75,520	75,650	75,770	75,900	76,020	76,140	76,260	76,380	76,500	76,620	76,740	76,860	76,980	77,100	77,220	77,330	77,450	21
22	80,150	80,270	80,390	80,520	80,640	80,760	80,880	80,990	81,110	81,230	81,350	81,460	81,580	81,690	81,800	81,920	82,030	82,140	82,250	82,360	82,470	22
23	83,540	83,760	83,980	84,200	84,420	84,630	84,850	85,070	85,280	85,500	85,720	85,930	86,150	86,360	86,580	86,790	87,000	87,220	87,430	87,640	87,850	23
24	86,940	87,250	87,570	87,880	88,200	88,510	88,830	89,140	89,460	89,770	90,090	90,400	90,720	91,030	91,350	91,660	91,980	92,290	92,610	92,920	93,240	24
25	90,340	90,750	91,160	91,570	91,980	92,390	92,800	93,220	93,630	94,040	94,460	94,870	95,290	95,700	96,120	96,540	96,950	97,370	97,790	98,210	98,620	25
26	90,340	90,750	91,160	91,570	91,980	92,390	92,800	93,220	93,630	94,040	94,460	94,870	95,290	95,700	96,120	96,540	96,950	97,370	97,790	98,210	98,620	26
27	90,340	90,750	91,160	91,570	91,980	92,390	92,800	93,220	93,630	94,040	94,460	94,870	95,290	95,700	96,120	96,540	96,950	97,370	97,790	98,210	98,620	27
28	90,340	90,750	91,160	91,570	91,980	92,390	92,800	93,220	93,630	94,040	94,460	94,870	95,290	95,700	96,120	96,540	96,950	97,370	97,790	98,210	98,620	28

GATE ARRANGEMENT	HEADWATER ELEVATION																				GATE ARRANGEMENT
	810.0	810.1	810.2	810.3	810.4	810.5	810.6	810.7	810.8	810.9	811.0	811.1	811.2	811.3	811.4	811.5	811.6	811.7	811.8	811.9	812.0	
1	2,550	2,560	2,570	2,570	2,580	2,580	2,590	2,590	2,600	2,600	2,610	2,610	2,620	2,620	2,630	2,630	2,640	2,640	2,650	2,650	2,660	1
2	5,490	5,510	5,520	5,530	5,540	5,550	5,560	5,570	5,590	5,600	5,610	5,620	5,630	5,640	5,650	5,660	5,670	5,690	5,700	5,710	5,720	2
3	8,520	8,530	8,550	8,570	8,590	8,600	8,620	8,640	8,660	8,670	8,690	8,710	8,730	8,740	8,760	8,780	8,800	8,810	8,830	8,850	8,860	3
4	11,600	11,620	11,650	11,670	11,700	11,720	11,750	11,770	11,790	11,820	11,840	11,870	11,890	11,920	11,940	11,970	11,990	12,010	12,040	12,060	12,090	4
5	14,830	14,870	14,900	14,930	14,960	14,990	15,020	15,050	15,080	15,120	15,150	15,180	15,210	15,240	15,270	15,300	15,330	15,360	15,400	15,430	15,460	5
6	17,810	17,850	17,880	17,920	17,960	18,000	18,030	18,070	18,110	18,140	18,180	18,210	18,250	18,290	18,320	18,360	18,390	18,430	18,470	18,500	18,540	6
7	21,200	21,250	21,300	21,340	21,390	21,440	21,480	21,530	21,580	21,620	21,670	21,720	21,760	21,810	21,850	21,900	21,940	21,990	22,040	22,080	22,130	7
8	24,650	24,700	24,760	24,810	24,860	24,910	24,960	25,010	25,060	25,110	25,160	25,210	25,260	25,310	25,360	25,410	25,460	25,510	25,560	25,610	25,660	8
9	28,240	28,300	28,360	28,420	28,480	28,530	28,590	28,650	28,710	28,770	28,820	28,880	28,940	28,990	29,050	29,110	29,170	29,220	29,280	29,340	29,390	9
10	31,840	31,900	31,970	32,030	32,090	32,160	32,220	32,290	32,350	32,410	32,480	32,540	32,610	32,670	32,730	32,800	32,860	32,920	32,990	33,050	33,110	10
11	35,450	35,520	35,590	35,660	35,730	35,800	35,870	35,940	36,020	36,090	36,160	36,230	36,300	36,370	36,440	36,510	36,580	36,650	36,710	36,780	36,850	11
12	38,960	39,040	39,120	39,190	39,270	39,340	39,420	39,490	39,570	39,640	39,720	39,790	39,870	39,940	40,020	40,090	40,170	40,240	40,320	40,390	40,470	12
13	42,470	42,550	42,630	42,710	42,790	42,870	42,950	43,030	43,110	43,190	43,270	43,350	43,430	43,500	43,580	43,660	43,740	43,820	43,900	43,980	44,060	13
14	45,970	46,050	46,140	46,220	46,310	46,390	46,480	46,560	46,640	46,730	46,810	46,900	46,980	47,060	47,150	47,230	47,310	47,400	47,480	47,560	47,640	14
15	49,430	49,520	49,610	49,700	49,780	49,870	49,960	50,050	50,140	50,230	50,310	50,400	50,490	50,580	50,670	50,750	50,840	50,930	51,010	51,100	51,190	15
16	52,880	52,970	53,060	53,150	53,250	53,340	53,430	53,520	53,620	53,710	53,800	53,890	53,980	54,070	54,170	54,260	54,350	54,440	54,530	54,620	54,710	16
17	57,720	57,830	57,930	58,040	58,140	58,250	58,350	58,460	58,560	58,670	58,770	58,870	58,980	59,080	59,190	59,290	59,390	59,500	59,600	59,700	59,810	17
18	62,570	62,680	62,800	62,920	63,040	63,150	63,270	63,390	63,510	63,620	63,740	63,860	63,970	64,090	64,200	64,320	64,440	64,550	64,670	64,790	64,900	18
19	67,410	67,540	67,670	67,800	67,930	68,060	68,190	68,320	68,450	68,580	68,710	68,840	68,970	69,100	69,220	69,350	69,480	69,610	69,740	69,870	70,000	19
20	72,430	72,550	72,680	72,800	72,920	73,040	73,160	73,280	73,400	73,520	73,640	73,760	73,880	74,000	74,120	74,240	74,360	74,480	74,600	74,710	74,830	20
21	77,450	77,560	77,680	77,790	77,910	78,020	78,130	78,250	78,360	78,470	78,580	78,690	78,800	78,910	79,020	79,130	79,240	79,350	79,450	79,560	79,670	21
22	82,470	82,580	82,680	82,790	82,900	83,000	83,110	83,210	83,310	83,420	83,520	83,620	83,720	83,820	83,920	84,020	84,120	84,210	84,310	84,410	84,500	22
23	87,850	88,060	88,280	88,470	88,620	88,770	88,920	89,070	89,220	89,370	89,520	89,660	89,810	89,960	90,100	90,250	90,390	90,530	90,680	90,820	90,960	23
24	93,240	93,550	93,870	94,140	94,340	94,540	94,730	94,930	95,130	95,320	95,520	95,710	95,900	96,090	96,290	96,480	96,670	96,860	97,050	97,230	97,420	24
25	98,620	99,040	99,460	99,820	100,100	100,300	100,500	100,800	101,000	101,300	101,500	101,800	102,000	102,200	102,500	102,700	102,900	103,200	103,400	103,600	103,900	25
26	98,620	99,040	99,460	99,840	100,100	100,400	100,700	101,000	101,400	101,700	102,000	102,300	102,600	102,900	103,200	103,500	103,800	104,100	104,400	104,700	105,000	26
27	98,620	99,040	99,460	99,860	100,200	100,600	100,900	101,300	101,700	102,000	102,400	102,800	103,100	103,500	103,800	104,200	104,600	104,900	105,300	105,700	106,000	27
28	98,620	99,040	99,460	99,880	100,300	100,700	101,100	101,600	102,000	102,400	102,800	103,300	103,700	104,100	104,500	105,000	105,400	105,800	106,200	106,700	107,100	28

HEADWATER 808 to 812
TAILWATER 785.51 to 786.5

MAY 2008

TELLICO DAM
SPILLWAY DISCHARGE
IN CUBIC FEET PER SECOND

HEADWATER ELEVATION

GATE ARRANGEMENT	812.0	812.1	812.2	812.3	812.4	812.5	812.6	812.7	812.8	812.9	813.0	813.1	813.2	813.3	813.4	813.5	813.6	813.7	813.8	813.9	814.0	GATE ARRANGEMENT
1	2,660	2,660	2,670	2,670	2,680	2,680	2,690	2,690	2,700	2,700	2,710	2,710	2,720	2,720	2,730	2,730	2,740	2,740	2,750	2,750	2,760	1
2	5,720	5,730	5,740	5,750	5,760	5,770	5,780	5,800	5,810	5,820	5,830	5,840	5,850	5,860	5,870	5,880	5,890	5,900	5,910	5,920	5,940	2
3	8,860	8,880	8,900	8,910	8,930	8,950	8,970	8,980	9,000	9,020	9,030	9,050	9,070	9,080	9,100	9,120	9,130	9,150	9,170	9,180	9,200	3
4	12,090	12,110	12,130	12,160	12,180	12,200	12,230	12,250	12,280	12,300	12,320	12,350	12,370	12,390	12,420	12,440	12,460	12,490	12,510	12,530	12,560	4
5	15,460	15,490	15,520	15,550	15,580	15,610	15,640	15,680	15,710	15,740	15,770	15,800	15,830	15,860	15,890	15,920	15,950	15,980	16,010	16,050	16,080	5
6	18,540	18,570	18,610	18,640	18,680	18,710	18,750	18,790	18,820	18,850	18,890	18,920	18,960	18,990	19,030	19,060	19,100	19,130	19,170	19,200	19,230	6
7	22,130	22,170	22,220	22,260	22,300	22,350	22,390	22,440	22,480	22,520	22,570	22,610	22,650	22,700	22,740	22,780	22,830	22,870	22,910	22,950	23,000	7
8	25,660	25,710	25,760	25,810	25,860	25,910	25,960	26,010	26,060	26,110	26,160	26,210	26,260	26,310	26,360	26,400	26,450	26,500	26,550	26,600	26,650	8
9	29,390	29,450	29,500	29,560	29,620	29,670	29,730	29,790	29,840	29,900	29,950	30,010	30,060	30,120	30,170	30,230	30,280	30,340	30,390	30,450	30,500	9
10	33,110	33,180	33,240	33,300	33,370	33,430	33,490	33,550	33,620	33,680	33,740	33,800	33,870	33,930	33,990	34,050	34,110	34,180	34,240	34,300	34,360	10
11	36,850	36,920	36,990	37,060	37,130	37,200	37,270	37,340	37,410	37,480	37,540	37,610	37,680	37,750	37,820	37,890	37,950	38,020	38,090	38,160	38,220	11
12	40,470	40,540	40,610	40,690	40,760	40,840	40,910	40,980	41,060	41,130	41,200	41,280	41,350	41,420	41,500	41,570	41,640	41,720	41,790	41,860	41,930	12
13	44,060	44,130	44,210	44,290	44,370	44,450	44,530	44,610	44,680	44,760	44,840	44,920	44,990	45,070	45,150	45,230	45,300	45,380	45,460	45,540	45,610	13
14	47,640	47,730	47,810	47,890	47,970	48,060	48,140	48,220	48,300	48,380	48,460	48,550	48,630	48,710	48,790	48,870	48,950	49,030	49,110	49,190	49,270	14
15	51,190	51,270	51,360	51,450	51,530	51,620	51,710	51,790	51,880	51,960	52,050	52,140	52,220	52,310	52,390	52,480	52,560	52,650	52,730	52,820	52,900	15
16	54,710	54,800	54,890	54,980	55,070	55,160	55,250	55,340	55,430	55,520	55,610	55,700	55,790	55,880	55,970	56,060	56,150	56,240	56,330	56,420	56,500	16
17	59,810	59,910	60,010	60,120	60,220	60,320	60,420	60,530	60,630	60,730	60,840	60,940	61,040	61,140	61,240	61,350	61,450	61,550	61,650	61,750	61,850	17
18	64,900	65,020	65,130	65,250	65,370	65,480	65,600	65,710	65,830	65,940	66,060	66,170	66,290	66,400	66,520	66,630	66,740	66,860	66,970	67,080	67,200	18
19	70,000	70,130	70,250	70,380	70,510	70,640	70,770	70,900	71,030	71,150	71,280	71,410	71,540	71,660	71,790	71,920	72,040	72,170	72,290	72,420	72,540	19
20	74,830	74,970	75,110	75,240	75,380	75,520	75,650	75,790	75,930	76,060	76,200	76,330	76,470	76,600	76,730	76,870	77,000	77,130	77,270	77,400	77,530	20
21	79,670	79,810	79,960	80,100	80,250	80,390	80,540	80,680	80,820	80,970	81,110	81,250	81,400	81,540	81,680	81,820	81,960	82,100	82,240	82,380	82,520	21
22	84,500	84,660	84,810	84,960	85,120	85,270	85,420	85,570	85,720	85,870	86,020	86,170	86,320	86,470	86,620	86,770	86,920	87,070	87,220	87,360	87,510	22
23	90,960	91,090	91,220	91,350	91,480	91,610	91,730	91,860	91,980	92,110	92,230	92,360	92,480	92,600	92,720	92,840	92,960	93,080	93,200	93,320	93,440	23
24	97,420	97,530	97,630	97,740	97,840	97,940	98,050	98,150	98,250	98,350	98,440	98,540	98,640	98,730	98,820	98,920	99,010	99,100	99,190	99,280	99,370	24
25	103,900	104,000	104,000	104,100	104,200	104,300	104,400	104,400	104,500	104,600	104,700	104,700	104,800	104,900	104,900	105,000	105,100	105,100	105,200	105,200	105,300	25
26	105,000	105,100	105,300	105,500	105,700	105,900	106,100	106,300	106,500	106,700	106,900	107,100	107,300	107,500	107,700	107,800	108,000	108,200	108,400	108,600	108,800	26
27	106,000	106,300	106,600	107,000	107,300	107,600	107,900	108,200	108,500	108,800	109,100	109,500	109,800	110,100	110,400	110,700	111,000	111,300	111,600	111,900	112,300	27
28	107,100	107,500	107,900	108,400	108,800	109,200	109,700	110,100	110,500	111,000	111,400	111,800	112,300	112,700	113,100	113,600	114,000	114,400	114,900	115,300	115,700	28

HEADWATER ELEVATION

GATE ARRANGEMENT	814.0	814.1	814.2	814.3	814.4	814.5	814.6	814.7	814.8	814.9	815.0	815.1	815.2	815.3	815.4	815.5	815.6	815.7	815.8	815.9	816.0	GATE ARRANGEMENT
1	2,760	2,760	2,770	2,770	2,780	2,780	2,790	2,790	2,800	2,800	2,810	2,810	2,820	2,820	2,830	2,830						1
2	5,940	5,950	5,960	5,970	5,980	5,990	6,000	6,010	6,020	6,030	6,040	6,050	6,060	6,070	6,080	6,090	6,100	6,110	6,120	6,130	6,140	2
3	9,200	9,210	9,230	9,250	9,260	9,280	9,300	9,310	9,330	9,340	9,360	9,380	9,390	9,410	9,430	9,440	9,460	9,470	9,490	9,510	9,520	3
4	12,560	12,580	12,600	12,630	12,650	12,670	12,690	12,720	12,740	12,760	12,790	12,810	12,830	12,850	12,880	12,900	12,920	12,950	12,970	12,990	13,010	4
5	16,080	16,110	16,140	16,170	16,200	16,230	16,260	16,290	16,320	16,350	16,380	16,410	16,440	16,470	16,500	16,520	16,550	16,580	16,610	16,640	16,670	5
6	19,230	19,270	19,300	19,340	19,370	19,400	19,440	19,470	19,500	19,540	19,570	19,600	19,640	19,670	19,700	19,740	19,770	19,800	19,830	19,870	19,900	6
7	23,000	23,040	23,080	23,120	23,160	23,200	23,240	23,280	23,330	23,370	23,410	23,450	23,490	23,530	23,570	23,610	23,650	23,690	23,720	23,760	23,800	7
8	26,650	26,690	26,740	26,790	26,840	26,880	26,930	26,980	27,030	27,070	27,120	27,170	27,220	27,260	27,310	27,350	27,400	27,450	27,490	27,540	27,580	8
9	30,500	30,560	30,610	30,660	30,720	30,770	30,830	30,880	30,930	30,990	31,040	31,090	31,150	31,200	31,250	31,300	31,360	31,410	31,460	31,510	31,560	9
10	34,360	34,420	34,480	34,540	34,600	34,660	34,720	34,780	34,840	34,900	34,960	35,020	35,080	35,140	35,200	35,260	35,320	35,370	35,430	35,490	35,550	10
11	38,220	38,290	38,360	38,420	38,490	38,560	38,620	38,690	38,750	38,820	38,880	38,950	39,010	39,080	39,140	39,210	39,270	39,330	39,400	39,460	39,520	11
12	41,930	42,010	42,080	42,150	42,220	42,290	42,360	42,430	42,500	42,580	42,650	42,720	42,790	42,860	42,930	42,990	43,060	43,130	43,200	43,270	43,340	12
13	45,610	45,690	45,770	45,840	45,920	45,990	46,070	46,140	46,220	46,300	46,370	46,450	46,520	46,590	46,670	46,740	46,820	46,890	46,960	47,040	47,110	13
14	49,270	49,350	49,430	49,510	49,590	49,670	49,750	49,830	49,910	49,990	50,070	50,150	50,230	50,310	50,390	50,470	50,550	50,630	50,700	50,780	50,860	14
15	52,900	52,990	53,070	53,160	53,240	53,330	53,410	53,490	53,580	53,660	53,740	53,830	53,910	53,990	54,080	54,160	54,240	54,330	54,410	54,490	54,570	15
16	56,500	56,590	56,680	56,770	56,860	56,950	57,040	57,120	57,210	57,300	57,390	57,470	57,560	57,650	57,740	57,820	57,910	58,000	58,080	58,170	58,250	16
17	61,850	61,950	62,050	62,150	62,250	62,350	62,450	62,550	62,640	62,740	62,840	62,930	63,030	63,130	63,220	63,320	63,410	63,510	63,600	63,690	63,790	17
18	67,200	67,310	67,420	67,530	67,640	67,750	67,860	67,970	68,080	68,180	68,290	68,400	68,500	68,610	68,710	68,810	68,920	69,020	69,120	69,220	69,320	18
19	72,540	72,660	72,790	72,910	73,030	73,150	73,270	73,390	73,510	73,620	73,740	73,860	73,970	74,080	74,200	74,310	74,420	74,530	74,640	74,740	74,850	19
20	77,530	77,660	77,790	77,920	78,050	78,180	78,310	78,440	78,560	78,690	78,810	78,940	79,060	79,190	79,310	79,430	79,550	79,670	79,790	79,910	80,020	20
21	82,520	82,660	82,800	82,930	83,070	83,210	83,350	83,480	83,620	83,750	83,890	84,020	84,150	84,290	84,420	84,550	84,680	84,810	84,940	85,070	85,200	21
22	87,510	87,660	87,800	87,950	88,090	88,240	88,380	88,530	88,670	88,820	88,960	89,100	89,240	89,390	89,530	89,670	89,810	89,950	90,090	90,230	90,370	22
23	93,440	93,570	93,690	93,820	93,950	94,070	94,200	94,320	94,450	94,570	94,690	94,810	94,940	95,060	95,180	95,300	95,420	95,540	95,660	95,770	95,890	23
24	99,370	99,480	99,590	99,700	99,800	99,910	100,000	100,100	100,200	100,300	100,400	100,500	100,600	100,700	100,800	100,900	101,000	101,100	101,200	101,300	101,400	24
25	105,300	105,400	105,500	105,600	105,700	105,700	105,800	105,900	106,000	106,100	106,200	106,200	106,300	106,400	106,500	106,600	106,600	106,700	106,800	106,900	106,900	25
26	108,800	109,000	109,200	109,400	109,600	109,800	110,000	110,200	110,400	110,600	111,000	111,100	111,100	111,200	111,300	111,300	111,400	111,400	111,500	111,500	111,600	26
27	112,300	112,600	112,900	113,200	113,500	113,900	114,200	114,500	114,800	115,100	115,900	115,900	116,000	116,000	116,000	116,100	116,100	116,100	116,100	116,200	116,200	27
28	115,700	116,200	116,600	117,000	117,500	117,900	118,400	118,800	119,200	119,700	120,800	120,800	120,800	120,800	120,800	120,800	120,800	120,800	120,800	120,800	120,800	28

MAY 2008

See special instruction for preventing gate overflow on page 2.

HEADWATER 812 to 816
TAILWATER 785.51 to 786.5

TELLICO DAM
SPILLWAY DISCHARGE
IN CUBIC FEET PER SECOND

HEADWATER ELEVATION

GATE ARRANGEMENT	816.0	816.1	816.2	816.3	816.4	816.5	816.6	816.7	816.8	816.9	817.0	817.1	817.2	817.3	817.4	817.5	817.6	817.7	817.8	817.9	818.0	GATE ARRANGEMENT
1																						1
2	6,140	6,150	6,160																			2
3	9,520	9,540	9,550	9,570	9,580	9,600	9,620	9,630	9,650	9,660	9,680											3
4	13,010	13,040	13,060	13,080	13,100	13,130	13,150	13,170	13,190	13,220	13,240	13,450	13,810	14,270	14,820	15,450	16,140	16,900				4
5	16,670	16,700	16,730	16,750	16,780	16,810	16,840	16,870	16,890	16,920	16,950	17,160	17,530	18,000	18,550	19,180	19,880	20,640	21,460	22,330	23,260	5
6	19,900	19,930	19,970	20,000	20,030	20,060	20,090	20,130	20,160	20,190	20,220	20,440	20,810	21,280	21,840	22,480	23,180	23,940	24,770	25,650	26,580	6
7	23,800	23,840	23,880	23,920	23,960	23,990	24,030	24,070	24,110	24,150	24,180	24,400	24,780	25,260	25,830	26,460	27,170	27,940	28,770	29,660	30,600	7
8	27,580	27,630	27,680	27,720	27,770	27,810	27,860	27,900	27,950	27,990	28,030	28,260	28,650	29,130	29,700	30,350	31,060	31,840	32,680	33,570	34,520	8
9	31,560	31,620	31,670	31,720	31,770	31,820	31,870	31,920	31,970	32,020	32,070	32,310	32,700	33,190	33,770	34,420	35,140	35,920	36,760	37,660	38,620	9
10	35,550	35,610	35,660	35,720	35,780	35,830	35,890	35,940	36,000	36,060	36,110	36,350	36,750	37,240	37,830	38,480	39,210	39,990	40,840	41,740	42,700	10
11	39,520	39,590	39,650	39,710	39,770	39,830	39,890	39,950	40,010	40,070	40,130	40,380	40,780	41,280	41,870	42,530	43,260	44,050	44,900	45,810	46,770	11
12	43,340	43,410	43,470	43,540	43,610	43,670	43,740	43,810	43,870	43,940	44,010	44,260	44,660	45,170	45,760	46,430	47,160	47,960	48,820	49,730	50,700	12
13	47,110	47,180	47,250	47,330	47,400	47,470	47,540	47,610	47,680	47,760	47,830	48,080	48,490	49,000	49,600	50,270	51,010	51,810	52,680	53,590	54,570	13
14	50,860	50,940	51,020	51,100	51,170	51,250	51,330	51,410	51,490	51,560	51,640	51,900	52,320	52,840	53,440	54,120	54,870	55,680	56,550	57,470	58,450	14
15	54,570	54,650	54,740	54,820	54,900	54,980	55,060	55,140	55,220	55,300	55,380	55,650	56,070	56,590	57,200	57,880	58,630	59,440	60,320	61,250	62,230	15
16	58,250	58,340	58,430	58,510	58,600	58,680	58,770	58,850	58,940	59,020	59,110	59,380	59,800	60,330	60,940	61,620	62,380	63,190	64,070	65,000	65,990	16
17	63,790	63,880	63,970	64,060	64,150	64,240	64,330	64,420	64,510	64,600	64,680	64,960	65,380	65,910	66,520	67,210	67,970	68,790	69,660	70,600	71,580	17
18	69,320	69,420	69,510	69,610	69,710	69,800	69,890	69,990	70,080	70,170	70,260	70,540	70,970	71,500	72,110	72,800	73,560	74,380	75,260	76,190	77,180	18
19	74,850	74,950	75,060	75,160	75,260	75,360	75,460	75,560	75,650	75,750	75,840	76,120	76,550	77,080	77,700	78,390	79,150	79,970	80,850	81,780	82,770	19
20	80,020	80,140	80,260	80,380	80,490	80,610	80,720	80,840	80,950	81,060	81,170	81,470	81,910	82,460	83,100	83,810	84,590	85,420	86,320	87,280	88,280	20
21	85,200	85,330	85,460	85,600	85,730	85,860	85,990	86,120	86,250	86,370	86,500	86,810	87,280	87,850	88,500	89,230	90,020	90,880	91,800	92,770	93,790	21
22	90,370	90,520	90,670	90,810	90,960	91,110	91,250	91,400	91,540	91,690	91,830	92,160	92,640	93,230	93,900	94,640	95,460	96,330	97,270	98,260	99,300	22
23	95,890	96,040	96,180	96,320	96,470	96,610	96,750	96,890	97,040	97,180	97,320	97,640	98,120	98,700	99,370	100,100	100,900	101,800	102,700	103,700	104,700	23
24	101,400	101,500	101,700	101,800	102,000	102,100	102,300	102,400	102,500	102,700	102,800	103,100	103,600	104,200	104,800	105,600	106,400	107,300	108,200	109,200	110,200	24
25	106,900	107,100	107,200	107,300	107,500	107,600	107,800	107,900	108,000	108,200	108,300	108,600	109,100	109,700	110,300	111,000	111,800	112,700	113,600	114,600	115,600	25
26	111,600	111,700	111,800	111,800	111,900	112,000	112,100	112,200	112,300	112,400	112,500	112,800	113,200	113,800	114,400	115,100	115,800	116,700	117,500	118,500	119,500	26
27	116,200	116,200	116,300	116,400	116,400	116,500	116,500	116,600	116,600	116,700	116,700	117,000	117,300	117,800	118,400	119,100	119,800	120,600	121,400	122,300	123,300	27
28	120,800	120,800	120,900	120,900	120,900	120,900	120,900	120,900	120,900	120,900	120,900	121,100	121,500	121,900	122,500	123,100	123,800	124,500	125,300	126,200	127,100	28

HEADWATER ELEVATION

GATE ARRANGEMENT	818.0	818.1	818.2	818.3	818.4	818.5	818.6	818.7	818.8	818.9	819.0	819.1	819.2	819.3	819.4	819.5	819.6	819.7	819.8	819.9	820.0	GATE ARRANGEMENT
1																						1
2																						2
3																						3
4																						4
5	23,260	24,240	25,280	26,360	27,480																	5
6	26,580	27,570	28,610	29,690	30,820	32,000	33,230	34,500	35,810	37,160	38,560	39,990										6
7	30,600	31,590	32,630	33,720	34,860	36,040	37,270	38,540	39,860	41,220	42,620	44,060	45,540	47,060	48,630	50,230	51,870	53,540	55,260			7
8	34,520	35,520	36,560	37,660	38,810	40,000	41,230	42,510	43,840	45,200	46,610	48,060	49,550	51,080	52,650	54,250	55,900	57,580	59,310	61,060	62,860	8
9	38,620	39,620	40,670	41,780	42,930	44,120	45,370	46,650	47,980	49,350	50,770	52,220	53,720	55,250	56,830	58,440	60,090	61,780	63,510	65,270	67,080	9
10	42,700	43,710	44,770	45,880	47,030	48,230	49,480	50,770	52,100	53,480	54,890	56,350	57,850	59,390	60,970	62,590	64,240	65,940	67,670	69,440	71,240	10
11	46,770	47,780	48,840	49,950	51,110	52,320	53,570	54,860	56,200	57,580	59,000	60,460	61,970	63,510	65,090	66,710	68,370	70,070	71,800	73,580	75,390	11
12	50,700	51,720	52,780	53,900	55,070	56,280	57,530	58,830	60,180	61,560	62,990	64,460	65,970	67,520	69,110	70,730	72,400	74,100	75,840	77,620	79,440	12
13	54,570	55,590	56,660	57,790	58,960	60,170	61,430	62,740	64,080	65,480	66,910	68,380	69,900	71,450	73,040	74,670	76,350	78,050	79,800	81,580	83,400	13
14	58,450	59,490	60,570	61,700	62,870	64,100	65,370	66,680	68,040	69,440	70,880	72,360	73,880	75,440	77,040	78,690	80,360	82,080	83,840	85,630	87,460	14
15	62,230	63,260	64,350	65,480	66,660	67,890	69,160	70,470	71,830	73,230	74,680	76,160	77,690	79,250	80,860	82,500	84,180	85,900	87,660	89,450	91,280	15
16	65,990	67,030	68,110	69,250	70,440	71,670	72,940	74,260	75,620	77,030	78,470	79,960	81,490	83,060	84,670	86,310	88,000	89,720	91,480	93,280	95,110	16
17	71,580	72,620	73,710	74,850	76,030	77,260	78,530	79,850	81,210	82,620	84,060	85,550	87,080	88,640	90,250	91,900	93,580	95,300	97,060	98,850	100,700	17
18	77,180	78,220	79,310	80,440	81,630	82,850	84,130	85,450	86,810	88,210	89,650	91,140	92,660	94,230	95,830	97,480	99,160	100,900	102,600	104,400	106,300	18
19	82,770	83,810	84,900	86,040	87,220	88,450	89,720	91,040	92,400	93,800	95,240	96,730	98,250	99,810	101,400	103,100	104,700	106,500	108,200	110,000	111,800	19
20	88,280	89,340	90,450	91,610	92,810	94,060	95,350	96,690	98,070	99,490	101,000	102,500	104,000	105,600	107,200	108,900	110,600	112,300	114,100	115,900	117,700	20
21	93,790	94,870	96,000	97,170	98,400	99,660	101,000	102,300	103,700	105,200	106,700	108,200	109,700	111,400	113,000	114,700	116,400	118,200	120,000	121,800	123,700	21
22	99,300	100,400	101,500	102,700	104,000	105,300	106,600	108,000	109,400	110,900	112,400	113,900	115,500	117,100	118,800	120,500	122,200	124,000	125,800	127,700	129,600	22
23	104,700	105,900	107,000	108,200	109,500	110,700	112,100	113,500	114,900	116,400	117,900	119,400	121,000	122,600	124,300	126,000	127,800	129,600	131,400	133,200	135,100	23
24	110,200	111,300	112,500	113,700	114,900	116,200	117,600	119,000	120,400	121,900	123,400	124,900	126,500	128,200	129,800	131,500	133,300	135,100	136,900	138,800	140,700	24
25	115,600	116,800	117,900	119,100	120,400	121,700	123,000	124,400	125,900	127,400	128,900	130,400	132,000	133,700	135,400	137,100	138,800	140,600	142,500	144,300	146,200	25
26	119,500	120,600	121,800	123,000	124,300	125,600	127,000	128,400	129,800	131,300	132,900	134,400	136,100	137,700	139,400	141,200	142,900	144,700	146,600	148,500	150,400	26
27	123,300	124,400	125,600	126,900	128,200	129,500	130,900	132,300	133,800	135,300	136,900	138,500	140,100	141,800	143,500	145,200	147,000	148,800	150,700	152,600	154,600	27
28	127,100	128,300	129,500	130,800	132,100	133,400	134,800	136,300	137,800	139,300	140,900	142,500	144,100	145,800	147,500	149,300	151,100	153,000	154,800	156,800	158,700	28

HEADWATER 816 to 820
TAILWATER 785.51 to 786.5

See special instruction for preventing gate overflow on page 2.

MAY 2008

TELLICO DAM

SPILLWAY DISCHARGE

IN CUBIC FEET PER SECOND

HEADWATER ELEVATION

GATE ARRANGEMENT	800.0	800.1	800.2	800.3	800.4	800.5	800.6	800.7	800.8	800.9	801.0	801.1	801.2	801.3	801.4	801.5	801.6	801.7	801.8	801.9	802.0	GATE ARRANGEMENT
1	1,880	1,890	1,890	1,900	1,910	1,920	1,920	1,930	1,940	1,940	1,950	1,960	1,970	1,970	1,980	1,990	1,990	2,000	2,010	2,010	2,020	1
2	4,040	4,060	4,080	4,090	4,110	4,120	4,140	4,150	4,170	4,180	4,200	4,210	4,230	4,240	4,260	4,270	4,290	4,300	4,310	4,330	4,340	2
3	6,260	6,290	6,310	6,330	6,360	6,380	6,400	6,430	6,450	6,470	6,500	6,520	6,540	6,570	6,590	6,610	6,640	6,660	6,680	6,700	6,730	3
4	8,430	8,460	8,490	8,520	8,560	8,590	8,620	8,650	8,680	8,720	8,750	8,780	8,810	8,840	8,870	8,900	8,940	8,970	9,000	9,030	9,060	4
5	10,890	10,930	10,970	11,000	11,040	11,080	11,120	11,160	11,200	11,240	11,280	11,320	11,360	11,400	11,430	11,470	11,510	11,550	11,590	11,630	11,670	5
6	13,180	13,220	13,270	13,310	13,360	13,400	13,450	13,490	13,540	13,580	13,630	13,670	13,710	13,760	13,800	13,850	13,890	13,940	13,980	14,020	14,070	6
7	15,680	15,730	15,790	15,840	15,900	15,950	16,000	16,060	16,110	16,170	16,220	16,280	16,330	16,380	16,440	16,490	16,550	16,600	16,660	16,710	16,760	7
8	18,120	18,190	18,250	18,320	18,380	18,450	18,510	18,580	18,640	18,710	18,770	18,840	18,900	18,970	19,030	19,100	19,160	19,230	19,290	19,350	19,420	8
9	20,830	20,900	20,980	21,050	21,120	21,200	21,270	21,350	21,420	21,490	21,570	21,640	21,710	21,790	21,860	21,930	22,010	22,080	22,150	22,230	22,300	9
10	23,550	23,630	23,720	23,800	23,880	23,960	24,050	24,130	24,210	24,290	24,380	24,460	24,540	24,620	24,710	24,790	24,870	24,950	25,030	25,110	25,200	10
11	26,280	26,380	26,470	26,560	26,650	26,740	26,830	26,930	27,020	27,110	27,200	27,290	27,380	27,470	27,560	27,660	27,750	27,840	27,930	28,020	28,110	11
12	29,320	29,410	29,510	29,610	29,710	29,800	29,900	30,000	30,090	30,190	30,290	30,390	30,480	30,580	30,680	30,770	30,870	30,960	31,060	31,160	31,250	12
13	32,420	32,530	32,630	32,730	32,840	32,940	33,040	33,140	33,250	33,350	33,450	33,550	33,650	33,760	33,860	33,960	34,060	34,160	34,260	34,360	34,470	13
14	35,560	35,670	35,780	35,890	36,000	36,100	36,210	36,320	36,430	36,530	36,640	36,750	36,850	36,960	37,070	37,170	37,280	37,390	37,490	37,600	37,700	14
15	38,730	38,850	38,960	39,080	39,190	39,300	39,420	39,530	39,640	39,760	39,870	39,980	40,090	40,210	40,320	40,430	40,540	40,650	40,760	40,880	40,990	15
16	41,940	42,060	42,180	42,290	42,410	42,530	42,650	42,760	42,880	43,000	43,120	43,230	43,350	43,460	43,580	43,690	43,810	43,920	44,040	44,150	44,270	16
17	46,120	46,240	46,360	46,480	46,600	46,710	46,830	46,950	47,070	47,180	47,300	47,420	47,530	47,650	47,760	47,880	47,990	48,110	48,220	48,340	48,450	17
18	50,300	50,420	50,540	50,660	50,780	50,900	51,020	51,140	51,250	51,370	51,490	51,600	51,720	51,830	51,950	52,060	52,180	52,290	52,410	52,520	52,640	18
19	54,480	54,600	54,720	54,840	54,960	55,080	55,200	55,320	55,440	55,560	55,670	55,790	55,900	56,020	56,140	56,250	56,360	56,480	56,590	56,710	56,820	19
20	55,910	56,120	56,320	56,530	56,730	56,930	57,140	57,340	57,540	57,750	57,950	58,150	58,360	58,560	58,760	58,960	59,170	59,370	59,570	59,780	59,980	20
21	57,340	57,630	57,920	58,210	58,500	58,780	59,070	59,360	59,650	59,940	60,230	60,520	60,810	61,100	61,390	61,680	61,970	62,260	62,550	62,840	63,140	21
22	58,770	59,140	59,520	59,890	60,260	60,630	61,010	61,380	61,760	62,130	62,510	62,880	63,260	63,640	64,020	64,390	64,770	65,150	65,530	65,910	66,300	22
23	58,770	59,140	59,520	59,890	60,260	60,630	61,010	61,380	61,760	62,130	62,510	62,880	63,260	63,640	64,020	64,390	64,770	65,150	65,530	65,910	66,300	23
24	58,770	59,140	59,520	59,890	60,260	60,630	61,010	61,380	61,760	62,130	62,510	62,880	63,260	63,640	64,020	64,390	64,770	65,150	65,530	65,910	66,300	24
25	58,770	59,140	59,520	59,890	60,260	60,630	61,010	61,380	61,760	62,130	62,510	62,880	63,260	63,640	64,020	64,390	64,770	65,150	65,530	65,910	66,300	25
26	58,770	59,140	59,520	59,890	60,260	60,630	61,010	61,380	61,760	62,130	62,510	62,880	63,260	63,640	64,020	64,390	64,770	65,150	65,530	65,910	66,300	26
27	58,770	59,140	59,520	59,890	60,260	60,630	61,010	61,380	61,760	62,130	62,510	62,880	63,260	63,640	64,020	64,390	64,770	65,150	65,530	65,910	66,300	27
28	58,770	59,140	59,520	59,890	60,260	60,630	61,010	61,380	61,760	62,130	62,510	62,880	63,260	63,640	64,020	64,390	64,770	65,150	65,530	65,910	66,300	28

HEADWATER ELEVATION

GATE ARRANGEMENT	802.0	802.1	802.2	802.3	802.4	802.5	802.6	802.7	802.8	802.9	803.0	803.1	803.2	803.3	803.4	803.5	803.6	803.7	803.8	803.9	804.0	GATE ARRANGEMENT
1	2,020	2,030	2,030	2,040	2,050	2,050	2,060	2,070	2,070	2,080	2,090	2,090	2,100	2,110	2,110	2,120	2,120	2,130	2,140	2,140	2,150	1
2	4,340	4,360	4,370	4,390	4,400	4,420	4,430	4,440	4,460	4,470	4,490	4,500	4,510	4,530	4,540	4,560	4,570	4,580	4,600	4,610	4,620	2
3	6,730	6,750	6,770	6,790	6,820	6,840	6,860	6,880	6,900	6,920	6,950	6,970	6,990	7,010	7,030	7,050	7,080	7,100	7,120	7,140	7,160	3
4	9,060	9,090	9,120	9,150	9,180	9,210	9,240	9,270	9,300	9,340	9,370	9,400	9,430	9,460	9,490	9,520	9,550	9,570	9,600	9,630	9,660	4
5	11,670	11,710	11,750	11,780	11,820	11,860	11,900	11,940	11,980	12,020	12,050	12,090	12,130	12,170	12,200	12,240	12,280	12,320	12,350	12,390	12,430	5
6	14,070	14,110	14,160	14,200	14,250	14,290	14,330	14,380	14,420	14,460	14,510	14,550	14,590	14,640	14,680	14,720	14,770	14,810	14,850	14,900	14,940	6
7	16,760	16,820	16,870	16,930	16,980	17,030	17,090	17,140	17,190	17,250	17,300	17,350	17,400	17,460	17,510	17,560	17,610	17,670	17,720	17,770	17,820	7
8	19,420	19,480	19,550	19,610	19,670	19,740	19,800	19,860	19,930	19,990	20,050	20,110	20,180	20,240	20,300	20,360	20,420	20,490	20,550	20,610	20,670	8
9	22,300	22,370	22,440	22,520	22,590	22,660	22,730	22,800	22,880	22,950	23,020	23,090	23,160	23,230	23,300	23,370	23,440	23,510	23,580	23,650	23,720	9
10	25,200	25,280	25,360	25,440	25,520	25,600	25,680	25,760	25,840	25,920	26,000	26,080	26,160	26,240	26,320	26,400	26,480	26,550	26,630	26,710	26,790	10
11	28,110	28,200	28,290	28,380	28,470	28,560	28,650	28,740	28,830	28,910	29,000	29,090	29,180	29,270	29,360	29,440	29,530	29,620	29,700	29,790	29,870	11
12	31,250	31,350	31,440	31,540	31,630	31,730	31,820	31,920	32,010	32,110	32,200	32,300	32,390	32,480	32,580	32,670	32,760	32,850	32,950	33,040	33,130	12
13	34,470	34,570	34,670	34,770	34,870	34,970	35,070	35,170	35,270	35,370	35,470	35,570	35,660	35,760	35,860	35,960	36,060	36,160	36,250	36,350	36,450	13
14	37,700	37,810	37,920	38,020	38,130	38,230	38,340	38,440	38,540	38,650	38,750	38,860	38,960	39,060	39,170	39,270	39,370	39,480	39,580	39,680	39,780	14
15	40,990	41,100	41,210	41,320	41,430	41,540	41,650	41,760	41,870	41,980	42,090	42,190	42,300	42,410	42,520	42,630	42,730	42,840	42,950	43,060	43,160	15
16	44,270	44,380	44,500	44,610	44,720	44,840	44,950	45,070	45,180	45,290	45,400	45,520	45,630	45,740	45,850	45,970	46,080	46,190	46,300	46,410	46,520	16
17	48,450	48,570	48,680	48,790	48,910	49,020	49,140	49,250	49,360	49,480	49,590	49,710	49,820	49,930	50,050	50,160	50,280	50,390	50,510	50,620	50,740	17
18	52,640	52,750	52,860	52,980	53,090	53,210	53,320	53,440	53,550	53,660	53,780	53,890	54,010	54,130	54,240	54,360	54,480	54,590	54,710	54,830	54,950	18
19	56,820	56,930	57,050	57,160	57,280	57,390	57,510	57,620	57,740	57,850	57,970	58,080	58,200	58,320	58,440	58,560	58,680	58,800	58,920	59,040	59,160	19
20	59,980	60,180	60,390	60,590	60,790	61,000	61,200	61,410	61,610	61,820	62,020	62,230	62,440	62,650	62,850	63,060	63,270	63,480	63,700	63,910	64,120	20
21	63,140	63,430	63,720	64,020	64,310	64,600	64,900	65,190	65,490	65,780	66,080	66,380	66,680	66,970	67,270	67,570	67,870	68,170	68,470	68,770	69,080	21
22	66,300	66,680	67,060	67,440	67,830	68,210	68,590	68,980	69,370	69,750	70,140	70,530	70,910	71,300	71,690	72,080	72,470	72,860	73,250	73,640	74,030	22
23	66,300	66,680	67,060	67,440	67,830	68,210	68,590	68,980	69,370	69,750	70,140	70,530	70,910	71,300	71,690	72,080	72,470	72,860	73,250	73,640	74,030	23
24	66,300	66,680	67,060	67,440	67,830	68,210	68,590	68,980	69,370	69,750	70,140	70,530	70,910	71,300	71,690	72,080	72,470	72,860	73,250	73,640	74,030	24
25	66,300	66,680	67,060	67,440	67,830	68,210	68,590	68,980	69,370	69,750	70,140	70,530	70,910	71,300	71,690	72,080	72,470	72,860	73,250	73,640	74,030	25
26	66,300	66,680	67,060	67,440	67,830	68,210	68,590	68,980	69,370	69,750	70,140	70,530	70,910	71,300	71,690	72,080	72,470	72,860	73,250	73,640	74,030	26
27	66,300	66,680	67,060	67,440	67,830	68,210	68,590	68,980	69,370	69,750	70,140	70,530	70,910	71,300	71,690	72,080	72,470	72,860	73,250	73,640	74,030	27
28	66,300	66,680	67,060	67,440	67,830	68,210	68,590	68,980	69,370	69,750	70,140	70,530	70,910	71,300	71,690	72,080	72,470	72,860	73,250	73,640	74,030	28

MAY 2008

HEADWATER 800 to 804
TAILWATER 786.51 to 787.5

TELLICO DAM
SPILLWAY DISCHARGE
IN CUBIC FEET PER SECOND

GATE ARRANGEMENT	HEADWATER ELEVATION																				GATE ARRANGEMENT
	804.0	804.1	804.2	804.3	804.4	804.5	804.6	804.7	804.8	804.9	805.0	805.1	805.2	805.3	805.4	805.5	805.6	805.7	805.8	805.9	806.0	
1	2,150	2,160	2,160	2,170	2,180	2,180	2,190	2,190	2,200	2,210	2,210	2,220	2,220	2,230	2,240	2,240	2,250	2,260	2,260	2,270	2,270	1
2	4,620	4,640	4,650	4,670	4,680	4,690	4,710	4,720	4,730	4,750	4,760	4,770	4,780	4,800	4,810	4,820	4,840	4,850	4,860	4,880	4,890	2
3	7,160	7,180	7,200	7,220	7,240	7,270	7,290	7,310	7,330	7,350	7,370	7,390	7,410	7,430	7,450	7,470	7,490	7,510	7,530	7,550	7,570	3
4	9,660	9,690	9,720	9,750	9,780	9,810	9,840	9,870	9,900	9,930	9,950	9,980	10,010	10,040	10,070	10,100	10,130	10,150	10,180	10,210	10,240	4
5	12,430	12,470	12,500	12,540	12,570	12,610	12,650	12,680	12,720	12,750	12,790	12,830	12,860	12,900	12,930	12,970	13,000	13,040	13,070	13,110	13,140	5
6	14,940	14,980	15,020	15,060	15,110	15,150	15,190	15,230	15,270	15,310	15,360	15,400	15,440	15,480	15,520	15,560	15,600	15,640	15,680	15,720	15,760	6
7	17,820	17,870	17,920	17,980	18,030	18,080	18,130	18,180	18,230	18,280	18,330	18,380	18,430	18,480	18,530	18,570	18,620	18,670	18,720	18,770	18,820	7
8	20,670	20,730	20,790	20,850	20,910	20,970	21,030	21,080	21,140	21,200	21,260	21,320	21,370	21,430	21,490	21,540	21,600	21,660	21,710	21,770	21,830	8
9	23,720	23,790	23,860	23,930	23,990	24,060	24,130	24,190	24,260	24,330	24,390	24,460	24,530	24,590	24,660	24,720	24,790	24,850	24,920	24,980	25,040	9
10	26,790	26,860	26,940	27,020	27,090	27,170	27,240	27,320	27,390	27,470	27,540	27,620	27,690	27,770	27,840	27,910	27,980	28,060	28,130	28,200	28,270	10
11	29,870	29,960	30,050	30,130	30,210	30,300	30,380	30,470	30,550	30,630	30,720	30,800	30,880	30,960	31,040	31,130	31,210	31,290	31,370	31,450	31,530	11
12	33,130	33,220	33,310	33,400	33,490	33,580	33,670	33,760	33,850	33,940	34,030	34,120	34,210	34,300	34,390	34,470	34,560	34,650	34,730	34,820	34,910	12
13	36,450	36,540	36,640	36,740	36,830	36,930	37,030	37,120	37,220	37,310	37,410	37,500	37,590	37,690	37,780	37,880	37,970	38,060	38,150	38,250	38,340	13
14	39,780	39,880	39,990	40,090	40,190	40,290	40,390	40,490	40,590	40,690	40,790	40,890	40,990	41,090	41,190	41,290	41,390	41,490	41,580	41,680	41,780	14
15	43,160	43,270	43,380	43,480	43,590	43,700	43,800	43,910	44,010	44,120	44,220	44,330	44,430	44,530	44,640	44,740	44,850	44,950	45,050	45,150	45,260	15
16	46,520	46,640	46,750	46,860	46,970	47,080	47,190	47,300	47,410	47,520	47,630	47,740	47,850	47,960	48,070	48,180	48,290	48,400	48,510	48,610	48,720	16
17	50,740	50,850	50,970	51,080	51,200	51,320	51,430	51,550	51,670	51,790	51,900	52,020	52,140	52,260	52,370	52,490	52,610	52,730	52,840	52,960	53,080	17
18	54,950	55,070	55,190	55,310	55,430	55,560	55,680	55,800	55,920	56,050	56,170	56,300	56,420	56,550	56,680	56,800	56,930	57,060	57,180	57,310	57,440	18
19	59,160	59,290	59,410	59,540	59,660	59,790	59,920	60,050	60,180	60,310	60,440	60,580	60,710	60,840	60,980	61,110	61,250	61,390	61,520	61,660	61,800	19
20	64,120	64,330	64,480	64,640	64,790	64,950	65,110	65,270	65,430	65,580	65,740	65,900	66,060	66,220	66,380	66,540	66,700	66,860	67,020	67,180	67,340	20
21	69,080	69,360	69,550	69,740	69,930	70,110	70,300	70,490	70,670	70,860	71,040	71,230	71,410	71,600	71,780	71,970	72,150	72,340	72,520	72,700	72,890	21
22	74,030	74,400	74,620	74,840	75,060	75,270	75,490	75,700	75,920	76,130	76,340	76,550	76,770	76,980	77,190	77,390	77,600	77,810	78,020	78,220	78,430	22
23	74,030	74,410	74,690	74,960	75,240	75,520	75,790	76,070	76,340	76,610	76,890	77,160	77,440	77,710	77,980	78,250	78,530	78,800	79,070	79,340	79,610	23
24	74,030	74,420	74,750	75,090	75,420	75,760	76,090	76,430	76,760	77,100	77,430	77,770	78,110	78,440	78,780	79,110	79,450	79,790	80,120	80,460	80,790	24
25	74,030	74,430	74,820	75,210	75,610	76,000	76,400	76,790	77,190	77,580	77,980	78,380	78,780	79,180	79,570	79,970	80,370	80,770	81,170	81,580	81,980	25
26	74,030	74,430	74,820	75,210	75,610	76,000	76,400	76,790	77,190	77,580	77,980	78,380	78,780	79,180	79,570	79,970	80,370	80,770	81,170	81,580	81,980	26
27	74,030	74,430	74,820	75,210	75,610	76,000	76,400	76,790	77,190	77,580	77,980	78,380	78,780	79,180	79,570	79,970	80,370	80,770	81,170	81,580	81,980	27
28	74,030	74,430	74,820	75,210	75,610	76,000	76,400	76,790	77,190	77,580	77,980	78,380	78,780	79,180	79,570	79,970	80,370	80,770	81,170	81,580	81,980	28

GATE ARRANGEMENT	HEADWATER ELEVATION																				GATE ARRANGEMENT
	806.0	806.1	806.2	806.3	806.4	806.5	806.6	806.7	806.8	806.9	807.0	807.1	807.2	807.3	807.4	807.5	807.6	807.7	807.8	807.9	808.0	
1	2,270	2,280	2,290	2,290	2,300	2,300	2,310	2,310	2,320	2,330	2,330	2,340	2,340	2,350	2,360	2,360	2,370	2,370	2,380	2,380	2,390	1
2	4,890	4,900	4,910	4,930	4,940	4,950	4,970	4,980	4,990	5,000	5,020	5,030	5,040	5,050	5,070	5,080	5,090	5,100	5,120	5,130	5,140	2
3	7,570	7,590	7,610	7,630	7,650	7,670	7,690	7,710	7,730	7,750	7,770	7,790	7,810	7,820	7,840	7,860	7,880	7,900	7,920	7,940	7,960	3
4	10,240	10,270	10,290	10,320	10,350	10,380	10,410	10,430	10,460	10,490	10,520	10,540	10,570	10,600	10,630	10,650	10,680	10,710	10,730	10,760	10,790	4
5	13,140	13,170	13,210	13,240	13,280	13,310	13,340	13,380	13,410	13,450	13,480	13,510	13,550	13,580	13,610	13,650	13,680	13,710	13,750	13,780	13,810	5
6	15,760	15,810	15,850	15,890	15,930	15,970	16,010	16,050	16,090	16,130	16,170	16,210	16,250	16,290	16,330	16,370	16,400	16,440	16,480	16,520	16,560	6
7	18,820	18,870	18,910	18,960	19,010	19,060	19,100	19,150	19,200	19,250	19,290	19,340	19,390	19,430	19,480	19,530	19,570	19,620	19,660	19,710	19,760	7
8	21,830	21,880	21,940	21,990	22,050	22,100	22,160	22,210	22,260	22,320	22,370	22,430	22,480	22,530	22,590	22,640	22,690	22,740	22,800	22,850	22,900	8
9	25,040	25,110	25,170	25,230	25,300	25,360	25,420	25,480	25,550	25,610	25,670	25,730	25,790	25,860	25,920	25,980	26,040	26,100	26,160	26,220	26,280	9
10	28,270	28,340	28,420	28,490	28,560	28,630	28,700	28,770	28,840	28,910	28,980	29,050	29,120	29,190	29,260	29,330	29,390	29,460	29,530	29,600	29,670	10
11	31,530	31,610	31,690	31,770	31,850	31,930	32,000	32,080	32,160	32,240	32,320	32,400	32,470	32,550	32,630	32,700	32,780	32,860	32,930	33,010	33,090	11
12	34,910	34,990	35,080	35,160	35,250	35,340	35,420	35,510	35,590	35,670	35,760	35,840	35,930	36,010	36,090	36,170	36,260	36,340	36,420	36,500	36,590	12
13	38,340	38,430	38,520	38,610	38,710	38,800	38,890	38,980	39,070	39,160	39,250	39,340	39,430	39,510	39,600	39,690	39,780	39,870	39,950	40,040	40,130	13
14	41,780	41,880	41,980	42,070	42,170	42,270	42,360	42,460	42,550	42,650	42,740	42,840	42,930	43,030	43,120	43,210	43,310	43,400	43,490	43,580	43,680	14
15	45,260	45,360	45,460	45,560	45,660	45,760	45,860	45,960	46,060	46,160	46,260	46,360	46,460	46,560	46,660	46,760	46,850	46,950	47,050	47,140	47,240	15
16	48,720	48,830	48,940	49,040	49,150	49,260	49,360	49,470	49,570	49,680	49,780	49,890	49,990	50,100	50,200	50,300	50,410	50,510	50,610	50,710	50,810	16
17	53,080	53,200	53,320	53,430	53,550	53,670	53,790	53,900	54,020	54,140	54,250	54,370	54,490	54,600	54,720	54,830	54,950	55,060	55,180	55,290	55,400	17
18	57,440	57,570	57,700	57,820	57,950	58,080	58,210	58,340	58,470	58,590	58,720	58,850	58,980	59,110	59,230	59,360	59,490	59,620	59,740	59,870	60,000	18
19	61,800	61,940	62,070	62,210	62,350	62,490	62,630	62,770	62,910	63,050	63,190	63,330	63,470	63,610	63,750	63,890	64,030	64,170	64,310	64,450	64,590	19
20	67,340	67,460	67,580	67,700	67,820	67,940	68,050	68,170	68,290	68,410	68,520	68,640	68,760	68,870	68,990	69,100	69,220	69,330	69,440	69,560	69,670	20
21	72,890	72,990	73,090	73,190	73,280	73,380	73,480	73,570	73,670	73,760	73,860	73,950	74,040	74,130	74,220	74,310	74,400	74,490	74,580	74,660	74,750	21
22	78,430	78,510	78,590	78,670	78,750	78,830	78,900	78,980	79,050	79,120	79,190	79,260	79,330	79,400	79,460	79,530	79,590	79,650	79,710	79,770	79,830	22
23	79,610	79,800	79,990	80,180	80,360	80,550	80,730	80,920	81,100	81,280	81,470	81,650	81,830	82,010	82,190	82,370	82,550	82,730	82,900	83,080	83,260	23
24	80,790	81,090	81,390	81,680	81,980	82,270	82,570	82,860	83,150	83,450	83,740	84,040	84,330	84,630	84,920	85,210	85,510	85,800	86,100	86,390	86,680	24
25	81,980	82,380	82,780	83,190	83,590	83,990	84,400	84,800	85,210	85,610	86,020	86,430	86,830	87,240	87,650	88,060	88,470	88,880	89,290	89,700	90,110	25
26	81,980	82,380	82,780	83,190	83,590	83,990	84,400	84,800	85,210	85,610	86,020	86,430	86,830	87,240	87,650	88,060	88,470	88,880	89,290	89,700	90,110	26
27	81,980	82,380	82,780	83,190	83,590	83,990	84,400	84,800	85,210	85,610	86,020	86,430	86,830	87,240	87,650	88,060	88,470	88,880	89,290	89,700	90,110	27
28	81,980	82,380	82,780	83,190	83,590	83,990	84,400	84,800	85,210	85,610	86,020	86,430	86,830	87,240	87,650	88,060	88,470	88,880	89,290	89,700	90,110	28

HEADWATER 804 to 808
TAILWATER 786.51 to 787.5

MAY 2008

TELLICO DAM
SPILLWAY DISCHARGE
IN CUBIC FEET PER SECOND

GATE ARRANGEMENT	HEADWATER ELEVATION																				
	808.0	808.1	808.2	808.3	808.4	808.5	808.6	808.7	808.8	808.9	809.0	809.1	809.2	809.3	809.4	809.5	809.6	809.7	809.8	809.9	810.0
1	2,390	2,400	2,400	2,410	2,410	2,420	2,420	2,430	2,430	2,440	2,450	2,450	2,460	2,460	2,470	2,470	2,480	2,480	2,490	2,500	2,500
2	5,140	5,150	5,160	5,180	5,190	5,200	5,210	5,220	5,240	5,250	5,260	5,270	5,280	5,300	5,310	5,320	5,330	5,340	5,360	5,370	5,380
3	7,960	7,980	8,000	8,020	8,030	8,050	8,070	8,090	8,110	8,130	8,150	8,160	8,180	8,200	8,220	8,240	8,260	8,270	8,290	8,310	8,330
4	10,790	10,810	10,840	10,870	10,890	10,920	10,950	10,970	11,000	11,030	11,050	11,080	11,100	11,130	11,160	11,180	11,210	11,230	11,260	11,280	11,310
5	13,810	13,850	13,880	13,910	13,940	13,980	14,010	14,040	14,080	14,110	14,140	14,170	14,210	14,240	14,270	14,300	14,340	14,370	14,400	14,430	14,470
6	16,560	16,600	16,640	16,680	16,720	16,760	16,800	16,840	16,880	16,920	16,960	17,000	17,040	17,080	17,120	17,150	17,190	17,230	17,270	17,310	17,350
7	19,760	19,800	19,850	19,890	19,940	19,980	20,030	20,080	20,120	20,170	20,210	20,260	20,300	20,350	20,390	20,440	20,480	20,520	20,570	20,610	20,660
8	22,900	22,950	23,000	23,060	23,110	23,160	23,210	23,260	23,310	23,360	23,420	23,470	23,520	23,570	23,620	23,670	23,720	23,770	23,820	23,870	23,920
9	26,280	26,340	26,400	26,460	26,520	26,580	26,640	26,700	26,760	26,810	26,870	26,930	26,990	27,050	27,110	27,170	27,220	27,280	27,340	27,400	27,460
10	29,670	29,740	29,800	29,870	29,940	30,010	30,070	30,140	30,210	30,270	30,340	30,410	30,470	30,540	30,610	30,670	30,740	30,810	30,870	30,940	31,000
11	33,090	33,160	33,240	33,320	33,390	33,470	33,540	33,620	33,690	33,770	33,840	33,920	33,990	34,070	34,140	34,220	34,290	34,370	34,440	34,520	34,590
12	36,590	36,670	36,750	36,830	36,910	36,990	37,070	37,150	37,230	37,310	37,390	37,470	37,550	37,630	37,710	37,790	37,870	37,950	38,030	38,110	38,190
13	40,130	40,210	40,300	40,390	40,470	40,560	40,640	40,730	40,810	40,900	40,980	41,070	41,150	41,230	41,320	41,400	41,480	41,570	41,650	41,730	41,820
14	43,680	43,770	43,860	43,950	44,040	44,130	44,220	44,310	44,400	44,490	44,580	44,670	44,760	44,850	44,940	45,020	45,110	45,200	45,290	45,370	45,460
15	47,240	47,340	47,430	47,530	47,620	47,720	47,810	47,900	48,000	48,090	48,180	48,280	48,370	48,460	48,550	48,640	48,740	48,830	48,920	49,010	49,100
16	50,810	50,910	51,010	51,110	51,210	51,310	51,410	51,510	51,600	51,700	51,800	51,890	51,990	52,080	52,180	52,270	52,370	52,460	52,560	52,650	52,750
17	55,400	55,520	55,630	55,740	55,850	55,960	56,080	56,190	56,300	56,410	56,520	56,620	56,730	56,840	56,950	57,060	57,170	57,270	57,380	57,490	57,590
18	60,000	60,120	60,250	60,370	60,490	60,620	60,740	60,870	60,990	61,110	61,230	61,360	61,480	61,600	61,720	61,840	61,960	62,080	62,200	62,320	62,440
19	64,590	64,720	64,860	65,000	65,140	65,270	65,410	65,550	65,680	65,820	65,950	66,090	66,220	66,360	66,490	66,620	66,760	66,890	67,020	67,160	67,290
20	69,670	69,800	69,940	70,070	70,200	70,340	70,470	70,600	70,730	70,860	70,990	71,120	71,250	71,380	71,510	71,640	71,770	71,900	72,020	72,150	72,280
21	74,750	74,880	75,010	75,140	75,270	75,400	75,530	75,660	75,780	75,910	76,040	76,160	76,290	76,410	76,530	76,660	76,780	76,900	77,020	77,140	77,260
22	79,830	79,960	80,090	80,210	80,340	80,470	80,590	80,710	80,840	80,960	81,080	81,200	81,320	81,440	81,560	81,670	81,790	81,910	82,020	82,140	82,250
23	83,260	83,480	83,700	83,920	84,150	84,370	84,590	84,810	85,030	85,250	85,470	85,690	85,900	86,120	86,340	86,560	86,780	86,990	87,210	87,430	87,640
24	86,680	87,000	87,320	87,630	87,950	88,270	88,590	88,900	89,220	89,540	89,860	90,170	90,490	90,810	91,130	91,440	91,760	92,080	92,400	92,710	93,030
25	90,110	90,520	90,930	91,350	91,760	92,170	92,580	93,000	93,410	93,830	94,240	94,660	95,080	95,490	95,910	96,330	96,750	97,160	97,580	98,000	98,420
26	90,110	90,520	90,930	91,350	91,760	92,170	92,580	93,000	93,410	93,830	94,240	94,660	95,080	95,490	95,910	96,330	96,750	97,160	97,580	98,000	98,420
27	90,110	90,520	90,930	91,350	91,760	92,170	92,580	93,000	93,410	93,830	94,240	94,660	95,080	95,490	95,910	96,330	96,750	97,160	97,580	98,000	98,420
28	90,110	90,520	90,930	91,350	91,760	92,170	92,580	93,000	93,410	93,830	94,240	94,660	95,080	95,490	95,910	96,330	96,750	97,160	97,580	98,000	98,420

GATE ARRANGEMENT	HEADWATER ELEVATION																				
	810.0	810.1	810.2	810.3	810.4	810.5	810.6	810.7	810.8	810.9	811.0	811.1	811.2	811.3	811.4	811.5	811.6	811.7	811.8	811.9	812.0
1	2,500	2,510	2,510	2,520	2,520	2,530	2,530	2,540	2,540	2,550	2,550	2,560	2,570	2,570	2,580	2,580	2,590	2,590	2,600	2,600	2,610
2	5,380	5,390	5,400	5,410	5,430	5,440	5,450	5,460	5,470	5,480	5,490	5,510	5,520	5,530	5,540	5,550	5,560	5,570	5,590	5,600	5,610
3	8,330	8,350	8,360	8,380	8,400	8,420	8,440	8,450	8,470	8,490	8,510	8,530	8,540	8,560	8,580	8,600	8,610	8,630	8,650	8,670	8,680
4	11,310	11,330	11,360	11,390	11,410	11,440	11,460	11,490	11,510	11,540	11,560	11,590	11,610	11,640	11,660	11,690	11,710	11,740	11,760	11,780	11,810
5	14,470	14,500	14,530	14,560	14,590	14,630	14,660	14,690	14,720	14,760	14,790	14,820	14,850	14,880	14,920	14,950	14,980	15,010	15,040	15,080	15,110
6	17,350	17,390	17,430	17,460	17,500	17,540	17,580	17,620	17,660	17,690	17,730	17,770	17,810	17,840	17,880	17,920	17,960	17,990	18,030	18,070	18,100
7	20,660	20,700	20,750	20,790	20,840	20,880	20,930	20,970	21,010	21,060	21,100	21,150	21,190	21,240	21,280	21,320	21,370	21,410	21,460	21,500	21,550
8	23,920	23,970	24,020	24,070	24,120	24,170	24,220	24,270	24,320	24,370	24,420	24,470	24,520	24,570	24,620	24,670	24,720	24,770	24,810	24,860	24,910
9	27,460	27,510	27,570	27,630	27,690	27,750	27,800	27,860	27,920	27,980	28,030	28,090	28,150	28,210	28,260	28,320	28,380	28,440	28,490	28,550	28,610
10	31,000	31,070	31,140	31,200	31,270	31,330	31,400	31,460	31,530	31,600	31,660	31,730	31,790	31,860	31,920	31,990	32,060	32,120	32,190	32,250	32,320
11	34,590	34,660	34,740	34,810	34,890	34,960	35,040	35,110	35,180	35,260	35,330	35,410	35,480	35,550	35,630	35,700	35,780	35,850	35,920	36,000	36,070
12	38,190	38,270	38,350	38,420	38,500	38,580	38,660	38,740	38,820	38,890	38,970	39,050	39,130	39,210	39,290	39,360	39,440	39,520	39,600	39,680	39,760
13	41,820	41,900	41,980	42,060	42,150	42,230	42,310	42,390	42,470	42,560	42,640	42,720	42,800	42,880	42,960	43,050	43,130	43,210	43,290	43,370	43,460
14	45,460	45,550	45,630	45,720	45,810	45,890	45,980	46,060	46,150	46,240	46,320	46,410	46,490	46,580	46,660	46,750	46,830	46,920	47,000	47,090	47,170
15	49,100	49,190	49,280	49,370	49,460	49,550	49,640	49,730	49,820	49,900	49,990	50,080	50,170	50,260	50,350	50,430	50,520	50,610	50,700	50,790	50,870
16	52,750	52,840	52,930	53,020	53,120	53,210	53,300	53,390	53,480	53,580	53,670	53,760	53,850	53,940	54,030	54,120	54,210	54,300	54,390	54,480	54,570
17	57,590	57,700	57,810	57,910	58,020	58,120	58,230	58,330	58,440	58,540	58,650	58,750	58,850	58,960	59,060	59,170	59,270	59,370	59,480	59,580	59,680
18	62,440	62,560	62,680	62,800	62,920	63,030	63,150	63,270	63,390	63,510	63,620	63,740	63,860	63,980	64,090	64,210	64,330	64,440	64,560	64,680	64,790
19	67,290	67,420	67,550	67,680	67,820	67,950	68,080	68,210	68,340	68,470	68,600	68,730	68,860	68,990	69,120	69,250	69,380	69,510	69,640	69,770	69,900
20	72,280	72,400	72,530	72,650	72,780	72,900	73,030	73,150	73,270	73,400	73,520	73,640	73,760	73,890	74,010	74,130	74,250	74,370	74,490	74,610	74,730
21	77,260	77,380	77,500	77,620	77,740	77,860	77,980	78,090	78,210	78,320	78,440	78,550	78,670	78,780	78,900	79,010	79,120	79,230	79,340	79,460	79,570
22	82,250	82,370	82,480	82,590	82,700	82,810	82,920	83,030	83,140	83,250	83,360	83,460	83,570	83,680	83,780	83,890	83,990	84,090	84,200	84,300	84,400
23	87,640	87,860	88,070	88,290	88,450	88,610	88,760	88,910	89,070	89,220	89,370	89,520	89,670	89,820	89,970	90,120	90,270	90,420	90,560	90,710	90,850
24	93,030	93,350	93,670	93,990	94,200	94,400	94,600	94,800	94,990	95,190	95,390	95,580	95,780	95,970	96,160	96,360	96,550	96,740	96,930	97,120	97,310
25	98,420	98,840	99,260	99,680	99,950	100,200	100,400	100,700	100,900	101,200	101,400	101,600	101,900	102,100	102,400	102,600	102,800	103,100	103,300	103,500	103,800
26	98,420	98,840	99,260	99,680	100,000	100,300	100,600	100,900	101,200	101,500	101,800	102,100	102,400	102,700	103,000	103,300	103,600	103,900	104,200	104,500	104,800
27	98,420	98,840	99,260	99,680	100,100	100,400	100,800	101,100	101,500	101,900	102,200	102,600	103,000	103,300	103,700	104,000	104,400	104,800	105,100	105,500	105,900
28	98,420	98,840	99,260	99,680	100,100	100,500	100,900	101,400	101,800	102,200	102,600	103,100	103,500	103,900	104,300	104,800	105,200	105,600	106,100	106,500	106,900

MAY 2008

HEADWATER 808 to 812
TAILWATER 786.51 to 787.5

TELLICO DAM
SPILLWAY DISCHARGE
IN CUBIC FEET PER SECOND

HEADWATER ELEVATION

GATE ARRANGEMENT	812.0	812.1	812.2	812.3	812.4	812.5	812.6	812.7	812.8	812.9	813.0	813.1	813.2	813.3	813.4	813.5	813.6	813.7	813.8	813.9	814.0	GATE ARRANGEMENT
1	2,610	2,610	2,620	2,620	2,630	2,630	2,640	2,640	2,650	2,650	2,660	2,660	2,670	2,670	2,680	2,680	2,690	2,690	2,700	2,700	2,710	1
2	5,610	5,620	5,630	5,640	5,650	5,660	5,670	5,690	5,700	5,710	5,720	5,730	5,740	5,750	5,760	5,770	5,780	5,800	5,810	5,820	5,830	2
3	8,680	8,700	8,720	8,740	8,750	8,770	8,790	8,800	8,820	8,840	8,860	8,870	8,890	8,910	8,920	8,940	8,960	8,970	8,990	9,010	9,020	3
4	11,810	11,830	11,860	11,880	11,910	11,930	11,960	11,980	12,000	12,030	12,050	12,080	12,100	12,120	12,150	12,170	12,190	12,220	12,240	12,270	12,290	4
5	15,110	15,140	15,170	15,200	15,240	15,270	15,300	15,330	15,360	15,400	15,430	15,460	15,490	15,520	15,550	15,590	15,620	15,650	15,680	15,710	15,740	5
6	18,100	18,140	18,180	18,210	18,250	18,280	18,320	18,350	18,390	18,420	18,460	18,500	18,530	18,560	18,600	18,630	18,670	18,700	18,740	18,770	18,800	6
7	21,550	21,590	21,640	21,680	21,720	21,770	21,810	21,860	21,900	21,950	21,990	22,030	22,080	22,120	22,170	22,210	22,260	22,300	22,340	22,390	22,430	7
8	24,910	24,960	25,010	25,060	25,110	25,160	25,210	25,260	25,310	25,360	25,410	25,460	25,510	25,560	25,610	25,660	25,710	25,760	25,810	25,850	25,900	8
9	28,610	28,670	28,720	28,780	28,840	28,900	28,950	29,010	29,070	29,130	29,180	29,240	29,300	29,360	29,410	29,470	29,530	29,580	29,640	29,700	29,750	9
10	32,320	32,390	32,450	32,520	32,580	32,650	32,720	32,780	32,850	32,910	32,980	33,040	33,110	33,180	33,240	33,310	33,370	33,440	33,500	33,570	33,630	10
11	36,070	36,150	36,220	36,300	36,370	36,440	36,520	36,590	36,670	36,740	36,810	36,890	36,960	37,040	37,110	37,180	37,260	37,330	37,400	37,470	37,550	11
12	39,760	39,830	39,910	39,990	40,070	40,150	40,230	40,310	40,380	40,460	40,540	40,620	40,700	40,780	40,850	40,930	41,010	41,090	41,160	41,240	41,320	12
13	43,460	43,540	43,620	43,700	43,780	43,870	43,950	44,030	44,110	44,190	44,280	44,360	44,440	44,520	44,600	44,680	44,760	44,850	44,930	45,010	45,090	13
14	47,170	47,260	47,340	47,430	47,510	47,590	47,680	47,760	47,850	47,930	48,020	48,100	48,180	48,270	48,350	48,440	48,520	48,600	48,690	48,770	48,850	14
15	50,870	50,960	51,050	51,140	51,220	51,310	51,400	51,490	51,570	51,660	51,750	51,840	51,920	52,010	52,100	52,180	52,270	52,360	52,440	52,530	52,620	15
16	54,570	54,660	54,750	54,840	54,930	55,020	55,110	55,200	55,290	55,380	55,470	55,560	55,650	55,740	55,830	55,920	56,010	56,100	56,190	56,280	56,370	16
17	59,680	59,790	59,890	59,990	60,100	60,200	60,300	60,400	60,510	60,610	60,710	60,810	60,920	61,020	61,120	61,220	61,320	61,430	61,530	61,630	61,730	17
18	64,790	64,910	65,020	65,140	65,260	65,370	65,490	65,600	65,720	65,840	65,950	66,070	66,180	66,300	66,410	66,520	66,640	66,750	66,860	66,980	67,090	18
19	69,900	70,030	70,160	70,290	70,420	70,550	70,680	70,810	70,930	71,060	71,190	71,320	71,440	71,570	71,700	71,820	71,950	72,080	72,200	72,320	72,450	19
20	74,730	74,870	75,010	75,140	75,280	75,420	75,550	75,690	75,830	75,960	76,100	76,230	76,370	76,500	76,630	76,770	76,900	77,030	77,160	77,300	77,430	20
21	79,570	79,710	79,860	80,000	80,140	80,290	80,430	80,580	80,720	80,860	81,000	81,150	81,290	81,430	81,570	81,710	81,850	81,990	82,130	82,270	82,410	21
22	84,400	84,550	84,700	84,860	85,010	85,160	85,310	85,460	85,610	85,760	85,910	86,060	86,210	86,360	86,500	86,650	86,800	86,950	87,090	87,240	87,380	22
23	90,850	90,980	91,110	91,240	91,360	91,490	91,610	91,730	91,860	91,980	92,100	92,220	92,340	92,460	92,580	92,700	92,820	92,940	93,050	93,170	93,280	23
24	97,310	97,410	97,510	97,610	97,710	97,810	97,910	98,010	98,100	98,200	98,290	98,390	98,480	98,570	98,660	98,750	98,840	98,930	99,010	99,100	99,180	24
25	103,800	103,800	103,900	104,000	104,100	104,100	104,200	104,300	104,400	104,400	104,500	104,600	104,600	104,700	104,700	104,800	104,900	104,900	105,000	105,000	105,100	25
26	104,800	105,000	105,200	105,400	105,600	105,800	106,000	106,200	106,400	106,500	106,700	106,900	107,100	107,300	107,500	107,700	107,800	108,000	108,200	108,400	108,600	26
27	105,900	106,200	106,500	106,800	107,100	107,400	107,700	108,000	108,300	108,700	109,000	109,300	109,600	109,900	110,200	110,500	110,800	111,100	111,500	111,800	112,100	27
28	106,900	107,300	107,800	108,200	108,600	109,100	109,500	109,900	110,300	110,800	111,200	111,600	112,100	112,500	112,900	113,400	113,800	114,300	114,700	115,100	115,600	28

HEADWATER ELEVATION

GATE ARRANGEMENT	814.0	814.1	814.2	814.3	814.4	814.5	814.6	814.7	814.8	814.9	815.0	815.1	815.2	815.3	815.4	815.5	815.6	815.7	815.8	815.9	816.0	GATE ARRANGEMENT
1	2,710	2,710	2,720	2,720	2,730	2,730	2,740	2,740	2,750	2,750	2,760	2,760	2,770	2,770	2,780	2,780						1
2	5,830	5,840	5,850	5,860	5,870	5,880	5,890	5,900	5,910	5,920	5,940	5,950	5,960	5,970	5,980	5,990	6,000	6,010	6,020	6,030	6,040	2
3	9,020	9,040	9,060	9,070	9,090	9,110	9,120	9,140	9,160	9,170	9,190	9,210	9,220	9,240	9,260	9,270	9,290	9,300	9,320	9,340	9,350	3
4	12,290	12,310	12,340	12,360	12,380	12,410	12,430	12,450	12,480	12,500	12,520	12,550	12,570	12,590	12,620	12,640	12,660	12,690	12,710	12,730	12,750	4
5	15,740	15,770	15,800	15,840	15,870	15,900	15,930	15,960	15,990	16,020	16,050	16,080	16,110	16,140	16,170	16,200	16,230	16,260	16,290	16,320	16,350	5
6	18,800	18,840	18,870	18,910	18,940	18,970	19,010	19,040	19,070	19,110	19,140	19,170	19,210	19,240	19,270	19,310	19,340	19,370	19,400	19,440	19,470	6
7	22,430	22,470	22,520	22,560	22,600	22,650	22,690	22,730	22,770	22,810	22,860	22,900	22,940	22,980	23,020	23,060	23,100	23,140	23,180	23,220	23,260	7
8	25,900	25,950	26,000	26,050	26,100	26,140	26,190	26,240	26,290	26,330	26,380	26,430	26,470	26,520	26,570	26,610	26,660	26,700	26,750	26,790	26,840	8
9	29,750	29,810	29,860	29,920	29,980	30,030	30,090	30,140	30,200	30,250	30,310	30,360	30,410	30,470	30,520	30,570	30,630	30,680	30,730	30,780	30,830	9
10	33,630	33,690	33,760	33,820	33,890	33,950	34,010	34,080	34,140	34,200	34,260	34,320	34,380	34,450	34,510	34,570	34,630	34,680	34,740	34,800	34,860	10
11	37,550	37,620	37,690	37,760	37,830	37,900	37,970	38,040	38,110	38,180	38,250	38,320	38,390	38,460	38,520	38,590	38,660	38,720	38,790	38,850	38,920	11
12	41,320	41,390	41,470	41,550	41,620	41,700	41,770	41,850	41,920	42,000	42,070	42,140	42,220	42,290	42,360	42,430	42,510	42,580	42,650	42,720	42,790	12
13	45,090	45,170	45,250	45,330	45,410	45,490	45,570	45,650	45,730	45,800	45,880	45,960	46,040	46,110	46,190	46,270	46,340	46,420	46,490	46,570	46,640	13
14	48,850	48,940	49,020	49,100	49,180	49,270	49,350	49,430	49,510	49,600	49,680	49,760	49,840	49,920	50,000	50,090	50,170	50,250	50,330	50,410	50,490	14
15	52,620	52,700	52,790	52,870	52,960	53,050	53,130	53,220	53,300	53,390	53,470	53,560	53,640	53,730	53,810	53,900	53,980	54,060	54,150	54,230	54,320	15
16	56,370	56,460	56,540	56,630	56,720	56,810	56,900	56,990	57,080	57,160	57,250	57,340	57,430	57,520	57,600	57,690	57,780	57,870	57,950	58,040	58,130	16
17	61,730	61,830	61,930	62,030	62,130	62,230	62,320	62,420	62,520	62,620	62,720	62,810	62,910	63,010	63,100	63,200	63,290	63,390	63,480	63,580	63,670	17
18	67,090	67,200	67,310	67,420	67,530	67,640	67,750	67,860	67,970	68,070	68,180	68,290	68,390	68,500	68,600	68,710	68,810	68,910	69,010	69,110	69,210	18
19	72,450	72,570	72,690	72,810	72,940	73,060	73,180	73,290	73,410	73,530	73,650	73,760	73,880	73,990	74,100	74,210	74,330	74,440	74,540	74,650	74,760	19
20	77,430	77,560	77,690	77,820	77,950	78,070	78,200	78,330	78,450	78,580	78,710	78,830	78,950	79,080	79,200	79,320	79,440	79,560	79,680	79,800	79,910	20
21	82,410	82,540	82,680	82,820	82,950	83,090	83,230	83,360	83,500	83,630	83,760	83,900	84,030	84,160	84,290	84,420	84,550	84,680	84,810	84,940	85,070	21
22	87,380	87,530	87,670	87,820	87,960	88,110	88,250	88,390	88,540	88,680	88,820	88,960	89,110	89,250	89,390	89,530	89,670	89,810	89,950	90,090	90,230	22
23	93,280	93,410	93,540	93,660	93,790	93,910	94,040	94,160	94,280	94,410	94,530	94,650	94,770	94,890	95,010	95,130	95,250	95,370	95,480	95,600	95,720	23
24	99,180	99,290	99,400	99,510	99,610	99,720	99,820	99,930	100,000	100,100	100,200	100,300	100,400	100,500	100,600	100,700	100,800	100,900	101,000	101,100	101,200	24
25	105,100	105,200	105,300	105,400	105,400	105,500	105,600	105,700	105,800	105,900	105,900	106,000	106,100	106,200	106,300	106,300	106,400	106,500	106,600	106,600	106,700	25
26	108,600	108,800	109,000	109,200	109,400	109,600	109,800	110,000	110,200	110,400	110,900	110,900	111,000	111,000	111,100	111,200	111,200	111,300	111,300	111,400	111,400	26
27	112,100	112,400	112,700	113,000	113,400	113,700	114,000	114,300	114,600	115,000	115,800	115,900	115,900	115,900	116,000	116,000	116,000	116,000	116,100	116,100	116,100	27
28	115,600	116,000	116,400	116,900	117,300	117,800	118,200	118,600	119,100	119,500	120,800	120,800	120,800	120,800	120,800	120,800	120,800	120,800	120,800	120,800	120,800	28

HEADWATER 812 to 816
TAILWATER 786.51 to 787.5

See special instruction for preventing gate overflow on page 2.

MAY 2008

TELLICO DAM
SPILLWAY DISCHARGE
IN CUBIC FEET PER SECOND

GATE ARRANGEMENT	HEADWATER ELEVATION																				GATE ARRANGEMENT
	816.0	816.1	816.2	816.3	816.4	816.5	816.6	816.7	816.8	816.9	817.0	817.1	817.2	817.3	817.4	817.5	817.6	817.7	817.8	817.9	818.0	
1																						1
2	6,040	6,050	6,060																			2
3	9,350	9,370	9,380	9,400	9,420	9,430	9,450	9,460	9,480	9,500	9,510											3
4	12,750	12,780	12,800	12,820	12,850	12,870	12,890	12,910	12,940	12,960	12,980	13,190	13,550	14,020	14,570	15,190	15,880	16,640				4
5	16,350	16,380	16,400	16,430	16,460	16,490	16,520	16,550	16,570	16,600	16,630	16,840	17,210	17,680	18,230	18,860	19,560	20,320	21,140	22,010	22,940	5
6	19,470	19,500	19,540	19,570	19,600	19,630	19,670	19,700	19,730	19,770	19,800	20,010	20,390	20,860	21,420	22,060	22,760	23,530	24,350	25,230	26,170	6
7	23,260	23,300	23,340	23,370	23,410	23,450	23,490	23,520	23,560	23,600	23,630	23,850	24,230	24,710	25,270	25,910	26,610	27,380	28,210	29,090	30,030	7
8	26,840	26,880	26,920	26,970	27,010	27,050	27,100	27,140	27,180	27,220	27,260	27,490	27,870	28,350	28,920	29,560	30,270	31,040	31,880	32,760	33,710	8
9	30,830	30,880	30,930	30,980	31,030	31,080	31,130	31,180	31,230	31,280	31,320	31,560	31,940	32,430	33,010	33,650	34,370	35,150	35,990	36,880	37,830	9
10	34,860	34,920	34,970	35,030	35,090	35,140	35,200	35,250	35,310	35,360	35,410	35,650	36,040	36,540	37,120	37,770	38,490	39,280	40,120	41,020	41,980	10
11	38,920	38,980	39,050	39,110	39,170	39,230	39,290	39,350	39,410	39,470	39,530	39,780	40,170	40,670	41,260	41,920	42,640	43,430	44,280	45,190	46,150	11
12	42,790	42,860	42,920	42,990	43,060	43,130	43,190	43,260	43,320	43,390	43,450	43,700	44,110	44,610	45,200	45,870	46,600	47,390	48,250	49,160	50,120	12
13	46,640	46,720	46,790	46,860	46,940	47,010	47,080	47,150	47,220	47,290	47,360	47,620	48,020	48,540	49,130	49,800	50,540	51,340	52,200	53,120	54,090	13
14	50,490	50,570	50,650	50,730	50,810	50,880	50,960	51,040	51,120	51,200	51,280	51,540	51,960	52,480	53,080	53,760	54,510	55,320	56,190	57,110	58,090	14
15	54,320	54,400	54,480	54,570	54,650	54,730	54,810	54,900	54,980	55,060	55,140	55,410	55,830	56,350	56,960	57,650	58,400	59,210	60,080	61,010	62,000	15
16	58,130	58,210	58,300	58,390	58,470	58,560	58,640	58,730	58,820	58,900	58,990	59,260	59,680	60,210	60,820	61,510	62,260	63,080	63,960	64,890	65,880	16
17	63,670	63,760	63,850	63,950	64,040	64,130	64,220	64,310	64,400	64,490	64,580	64,850	65,280	65,810	66,420	67,110	67,870	68,690	69,570	70,500	71,490	17
18	69,210	69,310	69,410	69,510	69,600	69,700	69,790	69,890	69,980	70,070	70,170	70,440	70,870	71,400	72,020	72,710	73,470	74,290	75,170	76,110	77,100	18
19	74,760	74,860	74,970	75,070	75,170	75,270	75,370	75,470	75,570	75,660	75,760	76,030	76,470	77,000	77,620	78,310	79,070	79,900	80,780	81,710	82,700	19
20	79,910	80,030	80,150	80,270	80,390	80,500	80,620	80,730	80,840	80,960	81,070	81,360	81,810	82,370	83,000	83,710	84,490	85,330	86,230	87,190	88,190	20
21	85,070	85,200	85,340	85,470	85,600	85,730	85,860	85,990	86,120	86,250	86,380	86,690	87,160	87,730	88,380	89,110	89,910	90,770	91,680	92,660	93,680	21
22	90,230	90,370	90,520	90,670	90,820	90,960	91,110	91,260	91,400	91,550	91,690	92,020	92,510	93,090	93,770	94,510	95,330	96,200	97,140	98,130	99,180	22
23	95,720	95,860	96,010	96,150	96,300	96,440	96,590	96,730	96,880	97,020	97,160	97,490	97,970	98,550	99,220	99,960	100,800	101,600	102,600	103,600	104,600	23
24	101,200	101,400	101,500	101,600	101,800	101,900	102,100	102,200	102,300	102,500	102,600	103,000	103,400	104,000	104,700	105,400	106,200	107,100	108,000	109,000	110,000	24
25	106,700	106,800	107,000	107,100	107,300	107,400	107,500	107,700	107,800	108,000	108,100	108,400	108,900	109,500	110,100	110,900	111,700	112,500	113,500	114,400	115,500	25
26	111,400	111,500	111,600	111,700	111,800	111,900	112,000	112,100	112,200	112,300	112,400	112,700	113,100	113,600	114,300	114,900	115,700	116,500	117,400	118,400	119,400	26
27	116,100	116,200	116,200	116,300	116,300	116,400	116,400	116,500	116,500	116,600	116,600	116,900	117,300	117,800	118,400	119,000	119,800	120,500	121,400	122,300	123,200	27
28	120,800	120,800	120,900	120,900	120,900	120,900	120,900	120,900	120,900	120,900	120,900	121,100	121,500	121,900	122,500	123,100	123,800	124,500	125,300	126,200	127,100	28

GATE ARRANGEMENT	HEADWATER ELEVATION																				GATE ARRANGEMENT
	818.0	818.1	818.2	818.3	818.4	818.5	818.6	818.7	818.8	818.9	819.0	819.1	819.2	819.3	819.4	819.5	819.6	819.7	819.8	819.9	820.0	
1																						1
2																						2
3																						3
4																						4
5	22,940	23,920	24,960	26,040	27,160																	5
6	26,170	27,160	28,190	29,280	30,410	31,590	32,820	34,090	35,400	36,760	38,150	39,590										6
7	30,030	31,020	32,060	33,140	34,280	35,460	36,690	37,960	39,270	40,630	42,020	43,460	44,940	46,460	48,020	49,620	51,250	52,930	54,640			7
8	33,710	34,700	35,740	36,840	37,980	39,160	40,390	41,670	42,990	44,350	45,750	47,190	48,680	50,200	51,760	53,370	55,010	56,690	58,400	60,160	61,950	8
9	37,830	38,830	39,880	40,980	42,130	43,320	44,560	45,840	47,160	48,530	49,940	51,390	52,880	54,410	55,980	57,580	59,230	60,910	62,640	64,400	66,190	9
10	41,980	42,980	44,040	45,140	46,290	47,490	48,730	50,010	51,340	52,710	54,130	55,580	57,070	58,610	60,180	61,800	63,450	65,140	66,860	68,630	70,430	10
11	46,150	47,160	48,220	49,320	50,480	51,680	52,930	54,220	55,550	56,930	58,340	59,800	61,300	62,840	64,420	66,030	67,690	69,380	71,110	72,880	74,690	11
12	50,120	51,140	52,200	53,320	54,480	55,690	56,940	58,230	59,570	60,960	62,380	63,840	65,350	66,890	68,480	70,100	71,760	73,460	75,200	76,970	78,780	12
13	54,090	55,110	56,180	57,300	58,470	59,680	60,940	62,240	63,590	64,970	66,400	67,870	69,380	70,930	72,520	74,150	75,820	77,530	79,270	81,050	82,860	13
14	58,090	59,120	60,200	61,340	62,510	63,740	65,000	66,320	67,670	69,070	70,510	71,990	73,510	75,080	76,680	78,320	80,000	81,710	83,470	85,260	87,080	14
15	62,000	63,030	64,120	65,250	66,430	67,660	68,930	70,250	71,610	73,010	74,460	75,940	77,470	79,040	80,640	82,290	83,970	85,690	87,450	89,240	91,070	15
16	65,880	66,920	68,010	69,150	70,330	71,570	72,840	74,160	75,530	76,930	78,380	79,870	81,400	82,970	84,580	86,230	87,920	89,640	91,400	93,200	95,040	16
17	71,490	72,530	73,620	74,760	75,940	77,170	78,450	79,770	81,130	82,540	83,990	85,470	87,000	88,570	90,180	91,820	93,510	95,230	96,990	98,790	100,600	17
18	77,100	78,140	79,230	80,360	81,550	82,780	84,060	85,370	86,740	88,140	89,590	91,070	92,600	94,170	95,780	97,420	99,100	100,800	102,600	104,400	106,200	18
19	82,700	83,740	84,830	85,970	87,160	88,390	89,660	90,980	92,340	93,750	95,190	96,680	98,200	99,770	101,400	103,000	104,700	106,400	108,200	110,000	111,800	19
20	88,190	89,250	90,360	91,520	92,720	93,970	95,270	96,610	97,990	99,410	100,900	102,400	103,900	105,500	107,100	108,800	110,500	112,200	114,000	115,800	117,700	20
21	93,680	94,760	95,890	97,070	98,290	99,560	100,900	102,200	103,600	105,100	106,600	108,100	109,700	111,300	112,900	114,600	116,300	118,100	119,900	121,700	123,600	21
22	99,180	100,300	101,400	102,600	103,900	105,100	106,500	107,900	109,300	110,700	112,300	113,800	115,400	117,000	118,700	120,400	122,100	123,900	125,700	127,600	129,500	22
23	104,600	105,700	106,900	108,100	109,300	110,600	112,000	113,300	114,800	116,200	117,800	119,300	120,900	122,500	124,200	125,900	127,700	129,400	131,300	133,100	135,000	23
24	110,000	111,200	112,300	113,500	114,800	116,100	117,400	118,800	120,300	121,700	123,300	124,800	126,400	128,000	129,700	131,400	133,200	135,000	136,800	138,700	140,600	24
25	115,500	116,600	117,800	119,000	120,200	121,600	122,900	124,300	125,700	127,200	128,700	130,300	131,900	133,600	135,200	137,000	138,700	140,500	142,400	144,200	146,100	25
26	119,400	120,500	121,700	122,900	124,200	125,500	126,900	128,300	129,700	131,200	132,800	134,400	136,000	137,600	139,300	141,100	142,900	144,700	146,500	148,400	150,300	26
27	123,200	124,400	125,600	126,800	128,100	129,500	130,900	132,300	133,700	135,300	136,800	138,400	140,000	141,700	143,400	145,200	147,000	148,800	150,700	152,600	154,500	27
28	127,100	128,300	129,500	130,800	132,100	133,400	134,800	136,300	137,800	139,300	140,900	142,500	144,100	145,800	147,500	149,300	151,100	153,000	154,800	156,800	158,700	28

MAY 2008

See special instruction for preventing gate overflow on page 2.

HEADWATER 816 to 820
TAILWATER 786.51 to 787.5

TELLICO DAM
SPILLWAY DISCHARGE
IN CUBIC FEET PER SECOND

HEADWATER ELEVATION

GATE ARRANGEMENT	800.0	800.1	800.2	800.3	800.4	800.5	800.6	800.7	800.8	800.9	801.0	801.1	801.2	801.3	801.4	801.5	801.6	801.7	801.8	801.9	802.0	GATE ARRANGEMENT
1	1,810	1,810	1,820	1,830	1,840	1,840	1,850	1,860	1,870	1,870	1,880	1,890	1,890	1,900	1,910	1,920	1,920	1,930	1,940	1,940	1,950	1
2	3,890	3,900	3,920	3,930	3,950	3,970	3,980	4,000	4,010	4,030	4,040	4,060	4,080	4,090	4,110	4,120	4,140	4,150	4,170	4,180	4,200	2
3	6,010	6,040	6,060	6,090	6,110	6,130	6,160	6,180	6,210	6,230	6,260	6,280	6,300	6,330	6,350	6,380	6,400	6,420	6,450	6,470	6,490	3
4	8,120	8,150	8,190	8,220	8,260	8,290	8,320	8,360	8,390	8,420	8,450	8,490	8,520	8,550	8,590	8,620	8,650	8,680	8,720	8,750	8,780	4
5	10,450	10,490	10,530	10,570	10,610	10,650	10,700	10,740	10,780	10,820	10,860	10,900	10,940	10,980	11,020	11,060	11,110	11,150	11,190	11,230	11,270	5
6	12,630	12,670	12,720	12,770	12,810	12,860	12,910	12,960	13,000	13,050	13,100	13,140	13,190	13,240	13,290	13,330	13,380	13,430	13,470	13,520	13,570	6
7	15,020	15,080	15,130	15,190	15,250	15,310	15,360	15,420	15,480	15,530	15,590	15,650	15,700	15,760	15,820	15,870	15,930	15,990	16,040	16,100	16,150	7
8	17,360	17,430	17,500	17,560	17,630	17,700	17,760	17,830	17,900	17,970	18,030	18,100	18,170	18,230	18,300	18,360	18,430	18,500	18,560	18,630	18,700	8
9	19,880	19,950	20,030	20,110	20,180	20,260	20,330	20,410	20,490	20,560	20,640	20,710	20,790	20,870	20,940	21,020	21,090	21,170	21,240	21,320	21,390	9
10	22,390	22,470	22,560	22,650	22,730	22,820	22,900	22,990	23,070	23,160	23,240	23,330	23,410	23,500	23,590	23,670	23,760	23,840	23,930	24,010	24,100	10
11	24,890	24,990	25,080	25,180	25,270	25,370	25,460	25,560	25,650	25,750	25,840	25,940	26,030	26,130	26,220	26,320	26,410	26,510	26,600	26,690	26,790	11
12	27,940	28,040	28,150	28,250	28,350	28,450	28,550	28,650	28,750	28,850	28,960	29,060	29,160	29,260	29,360	29,460	29,560	29,660	29,760	29,860	29,960	12
13	31,070	31,180	31,290	31,400	31,500	31,610	31,720	31,830	31,930	32,040	32,150	32,260	32,360	32,470	32,580	32,680	32,790	32,900	33,000	33,110	33,220	13
14	34,280	34,390	34,500	34,620	34,730	34,840	34,960	35,070	35,180	35,290	35,410	35,520	35,630	35,750	35,860	35,970	36,080	36,190	36,310	36,420	36,530	14
15	37,530	37,650	37,770	37,890	38,010	38,130	38,250	38,370	38,480	38,600	38,720	38,840	38,960	39,080	39,190	39,310	39,430	39,550	39,660	39,780	39,900	15
16	40,810	40,940	41,070	41,190	41,320	41,440	41,570	41,690	41,820	41,940	42,060	42,190	42,310	42,430	42,560	42,680	42,800	42,930	43,050	43,170	43,290	16
17	45,300	45,420	45,550	45,670	45,790	45,910	46,030	46,150	46,270	46,390	46,510	46,630	46,750	46,870	46,980	47,100	47,220	47,340	47,460	47,570	47,690	17
18	49,790	49,910	50,020	50,140	50,260	50,380	50,490	50,610	50,730	50,840	50,960	51,070	51,180	51,300	51,410	51,520	51,640	51,750	51,860	51,980	52,090	18
19	54,270	54,390	54,500	54,620	54,730	54,850	54,960	55,070	55,180	55,290	55,400	55,510	55,620	55,730	55,840	55,950	56,050	56,160	56,270	56,380	56,490	19
20	55,640	55,840	56,040	56,240	56,450	56,650	56,850	57,050	57,250	57,450	57,640	57,840	58,040	58,240	58,440	58,640	58,840	59,040	59,240	59,440	59,640	20
21	57,010	57,300	57,580	57,870	58,160	58,450	58,730	59,020	59,310	59,600	59,890	60,180	60,470	60,760	61,040	61,330	61,620	61,920	62,210	62,500	62,790	21
22	58,380	58,750	59,120	59,500	59,870	60,250	60,620	61,000	61,380	61,750	62,130	62,510	62,890	63,270	63,650	64,030	64,410	64,790	65,170	65,560	65,940	22
23	58,380	58,750	59,120	59,500	59,870	60,250	60,620	61,000	61,380	61,750	62,130	62,510	62,890	63,270	63,650	64,030	64,410	64,790	65,170	65,560	65,940	23
24	58,380	58,750	59,120	59,500	59,870	60,250	60,620	61,000	61,380	61,750	62,130	62,510	62,890	63,270	63,650	64,030	64,410	64,790	65,170	65,560	65,940	24
25	58,380	58,750	59,120	59,500	59,870	60,250	60,620	61,000	61,380	61,750	62,130	62,510	62,890	63,270	63,650	64,030	64,410	64,790	65,170	65,560	65,940	25
26	58,380	58,750	59,120	59,500	59,870	60,250	60,620	61,000	61,380	61,750	62,130	62,510	62,890	63,270	63,650	64,030	64,410	64,790	65,170	65,560	65,940	26
27	58,380	58,750	59,120	59,500	59,870	60,250	60,620	61,000	61,380	61,750	62,130	62,510	62,890	63,270	63,650	64,030	64,410	64,790	65,170	65,560	65,940	27
28	58,380	58,750	59,120	59,500	59,870	60,250	60,620	61,000	61,380	61,750	62,130	62,510	62,890	63,270	63,650	64,030	64,410	64,790	65,170	65,560	65,940	28

HEADWATER ELEVATION

GATE ARRANGEMENT	802.0	802.1	802.2	802.3	802.4	802.5	802.6	802.7	802.8	802.9	803.0	803.1	803.2	803.3	803.4	803.5	803.6	803.7	803.8	803.9	804.0	GATE ARRANGEMENT
1	1,950	1,960	1,970	1,970	1,980	1,990	1,990	2,000	2,010	2,010	2,020	2,030	2,030	2,040	2,050	2,050	2,060	2,070	2,070	2,080	2,090	1
2	4,200	4,210	4,230	4,240	4,260	4,270	4,290	4,300	4,310	4,330	4,340	4,360	4,370	4,390	4,400	4,420	4,430	4,440	4,460	4,470	4,490	2
3	6,490	6,520	6,540	6,560	6,580	6,610	6,630	6,650	6,670	6,700	6,720	6,740	6,760	6,790	6,810	6,830	6,850	6,870	6,900	6,920	6,940	3
4	8,780	8,810	8,840	8,880	8,910	8,940	8,970	9,000	9,030	9,060	9,100	9,130	9,160	9,190	9,220	9,250	9,280	9,310	9,340	9,370	9,400	4
5	11,270	11,310	11,350	11,390	11,430	11,470	11,510	11,550	11,590	11,630	11,670	11,710	11,750	11,790	11,830	11,870	11,910	11,950	11,980	12,020	12,060	5
6	13,570	13,610	13,660	13,710	13,750	13,800	13,850	13,890	13,940	13,980	14,030	14,080	14,120	14,170	14,210	14,260	14,300	14,350	14,390	14,440	14,480	6
7	16,150	16,210	16,270	16,320	16,380	16,430	16,490	16,540	16,600	16,660	16,710	16,770	16,820	16,870	16,930	16,980	17,040	17,090	17,140	17,200	17,250	7
8	18,700	18,760	18,830	18,890	18,960	19,020	19,090	19,150	19,220	19,280	19,350	19,410	19,470	19,540	19,600	19,660	19,730	19,790	19,850	19,910	19,970	8
9	21,390	21,470	21,540	21,620	21,690	21,770	21,840	21,920	21,990	22,060	22,140	22,210	22,280	22,360	22,430	22,500	22,570	22,650	22,720	22,790	22,860	9
10	24,100	24,180	24,260	24,350	24,430	24,520	24,600	24,680	24,770	24,850	24,930	25,020	25,100	25,180	25,260	25,350	25,430	25,510	25,590	25,670	25,750	10
11	26,790	26,880	26,980	27,070	27,160	27,260	27,350	27,440	27,540	27,630	27,720	27,820	27,910	28,000	28,090	28,180	28,270	28,370	28,460	28,550	28,640	11
12	29,960	30,060	30,160	30,260	30,360	30,460	30,560	30,660	30,760	30,860	30,960	31,060	31,160	31,250	31,350	31,450	31,550	31,640	31,740	31,840	31,930	12
13	33,220	33,320	33,430	33,530	33,640	33,750	33,850	33,960	34,060	34,170	34,270	34,370	34,480	34,580	34,690	34,790	34,890	34,990	35,100	35,200	35,300	13
14	36,530	36,640	36,750	36,860	36,970	37,080	37,190	37,300	37,410	37,520	37,630	37,740	37,850	37,960	38,070	38,180	38,280	38,390	38,500	38,610	38,710	14
15	39,900	40,020	40,130	40,250	40,360	40,480	40,600	40,710	40,830	40,940	41,060	41,170	41,280	41,400	41,510	41,620	41,740	41,850	41,960	42,070	42,190	15
16	43,290	43,410	43,540	43,660	43,780	43,900	44,020	44,140	44,260	44,380	44,500	44,620	44,740	44,850	44,970	45,090	45,210	45,330	45,440	45,560	45,680	16
17	47,690	47,810	47,920	48,040	48,160	48,280	48,390	48,510	48,630	48,740	48,860	48,980	49,090	49,210	49,330	49,450	49,560	49,680	49,800	49,920	50,040	17
18	52,090	52,200	52,310	52,430	52,540	52,650	52,770	52,880	52,990	53,110	53,220	53,340	53,450	53,570	53,680	53,800	53,920	54,040	54,160	54,270	54,400	18
19	56,490	56,590	56,700	56,810	56,920	57,030	57,140	57,250	57,360	57,470	57,580	57,700	57,810	57,920	58,040	58,160	58,270	58,390	58,510	58,630	58,750	19
20	59,640	59,840	60,040	60,240	60,440	60,640	60,840	61,050	61,250	61,450	61,660	61,860	62,070	62,270	62,480	62,690	62,900	63,110	63,320	63,530	63,740	20
21	62,790	63,080	63,370	63,670	63,960	64,250	64,550	64,840	65,140	65,430	65,730	66,030	66,320	66,620	66,920	67,220	67,520	67,820	68,120	68,420	68,720	21
22	65,940	66,320	66,710	67,090	67,480	67,860	68,250	68,640	69,020	69,410	69,800	70,190	70,580	70,970	71,360	71,750	72,140	72,530	72,930	73,320	73,710	22
23	65,940	66,320	66,710	67,090	67,480	67,860	68,250	68,640	69,020	69,410	69,800	70,190	70,580	70,970	71,360	71,750	72,140	72,530	72,930	73,320	73,710	23
24	65,940	66,320	66,710	67,090	67,480	67,860	68,250	68,640	69,020	69,410	69,800	70,190	70,580	70,970	71,360	71,750	72,140	72,530	72,930	73,320	73,710	24
25	65,940	66,320	66,710	67,090	67,480	67,860	68,250	68,640	69,020	69,410	69,800	70,190	70,580	70,970	71,360	71,750	72,140	72,530	72,930	73,320	73,710	25
26	65,940	66,320	66,710	67,090	67,480	67,860	68,250	68,640	69,020	69,410	69,800	70,190	70,580	70,970	71,360	71,750	72,140	72,530	72,930	73,320	73,710	26
27	65,940	66,320	66,710	67,090	67,480	67,860	68,250	68,640	69,020	69,410	69,800	70,190	70,580	70,970	71,360	71,750	72,140	72,530	72,930	73,320	73,710	27
28	65,940	66,320	66,710	67,090	67,480	67,860	68,250	68,640	69,020	69,410	69,800	70,190	70,580	70,970	71,360	71,750	72,140	72,530	72,930	73,320	73,710	28

HEADWATER 800 to 804
TAILWATER 787.51 to 788.5

MAY 2008

TELLICO DAM

SPILLWAY DISCHARGE

IN CUBIC FEET PER SECOND

HEADWATER ELEVATION

GATE ARRANGEMENT	804.0	804.1	804.2	804.3	804.4	804.5	804.6	804.7	804.8	804.9	805.0	805.1	805.2	805.3	805.4	805.5	805.6	805.7	805.8	805.9	806.0	GATE ARRANGEMENT
1	2,090	2,090	2,100	2,110	2,110	2,120	2,120	2,130	2,140	2,140	2,150	2,160	2,160	2,170	2,180	2,180	2,190	2,190	2,200	2,210	2,210	1
2	4,490	4,500	4,510	4,530	4,540	4,560	4,570	4,580	4,600	4,610	4,620	4,640	4,650	4,670	4,680	4,690	4,710	4,720	4,730	4,750	4,760	2
3	6,940	6,960	6,980	7,010	7,030	7,050	7,070	7,090	7,110	7,130	7,150	7,170	7,200	7,220	7,240	7,260	7,280	7,300	7,320	7,340	7,360	3
4	9,400	9,430	9,460	9,490	9,520	9,550	9,580	9,610	9,640	9,670	9,700	9,730	9,760	9,790	9,820	9,850	9,880	9,910	9,940	9,960	9,990	4
5	12,060	12,100	12,140	12,180	12,210	12,250	12,290	12,330	12,360	12,400	12,440	12,470	12,510	12,550	12,580	12,620	12,660	12,690	12,730	12,760	12,800	5
6	14,480	14,530	14,570	14,610	14,660	14,700	14,750	14,790	14,830	14,870	14,920	14,960	15,000	15,050	15,090	15,130	15,170	15,210	15,260	15,300	15,340	6
7	17,250	17,300	17,360	17,410	17,460	17,510	17,560	17,620	17,670	17,720	17,770	17,820	17,870	17,920	17,970	18,020	18,070	18,120	18,170	18,220	18,270	7
8	19,970	20,040	20,100	20,160	20,220	20,280	20,340	20,400	20,450	20,510	20,570	20,630	20,690	20,750	20,800	20,860	20,920	20,970	21,030	21,090	21,140	8
9	22,860	22,930	23,000	23,070	23,140	23,210	23,280	23,350	23,420	23,480	23,550	23,620	23,690	23,750	23,820	23,890	23,950	24,020	24,090	24,150	24,220	9
10	25,750	25,830	25,910	25,990	26,070	26,150	26,230	26,300	26,380	26,460	26,540	26,610	26,690	26,770	26,840	26,920	26,990	27,070	27,140	27,220	27,290	10
11	28,640	28,730	28,820	28,910	29,000	29,080	29,170	29,260	29,350	29,440	29,520	29,610	29,700	29,780	29,870	29,960	30,040	30,130	30,210	30,300	30,380	11
12	31,930	32,030	32,120	32,220	32,310	32,410	32,500	32,600	32,690	32,790	32,880	32,970	33,060	33,160	33,250	33,340	33,430	33,520	33,610	33,710	33,800	12
13	35,300	35,400	35,500	35,600	35,700	35,800	35,910	36,000	36,100	36,200	36,300	36,400	36,500	36,600	36,690	36,790	36,890	36,990	37,080	37,180	37,270	13
14	38,710	38,820	38,930	39,030	39,140	39,250	39,350	39,460	39,560	39,670	39,770	39,870	39,980	40,080	40,190	40,290	40,390	40,490	40,600	40,700	40,800	14
15	42,190	42,300	42,410	42,520	42,630	42,740	42,850	42,960	43,070	43,180	43,290	43,400	43,500	43,610	43,720	43,830	43,930	44,040	44,150	44,250	44,360	15
16	45,680	45,790	45,910	46,030	46,140	46,260	46,370	46,490	46,600	46,710	46,830	46,940	47,060	47,170	47,280	47,390	47,510	47,620	47,730	47,840	47,950	16
17	50,040	50,150	50,270	50,390	50,510	50,630	50,750	50,870	50,990	51,110	51,230	51,350	51,470	51,590	51,720	51,840	51,960	52,080	52,200	52,320	52,440	17
18	54,400	54,520	54,640	54,760	54,880	55,010	55,130	55,260	55,380	55,510	55,640	55,760	55,890	56,020	56,150	56,280	56,410	56,540	56,670	56,800	56,930	18
19	58,750	58,880	59,000	59,130	59,250	59,380	59,510	59,640	59,770	59,910	60,040	60,180	60,310	60,450	60,580	60,720	60,860	61,000	61,140	61,280	61,420	19
20	63,740	63,890	64,050	64,210	64,360	64,520	64,680	64,840	64,990	65,150	65,310	65,470	65,630	65,790	65,950	66,120	66,280	66,440	66,600	66,760	66,920	20
21	68,720	68,910	69,100	69,280	69,470	69,660	69,840	70,030	70,210	70,400	70,580	70,770	70,950	71,140	71,320	71,510	71,690	71,880	72,060	72,240	72,430	21
22	73,710	73,930	74,140	74,360	74,580	74,790	75,010	75,220	75,430	75,640	75,850	76,070	76,270	76,480	76,690	76,900	77,110	77,310	77,520	77,720	77,930	22
23	73,710	73,990	74,260	74,540	74,820	75,090	75,370	75,640	75,910	76,190	76,460	76,730	77,010	77,280	77,550	77,820	78,100	78,370	78,640	78,910	79,180	23
24	73,710	74,050	74,380	74,720	75,050	75,390	75,720	76,060	76,400	76,730	77,070	77,400	77,740	78,080	78,410	78,750	79,090	79,420	79,760	80,100	80,430	24
25	73,710	74,110	74,500	74,900	75,290	75,690	76,080	76,480	76,880	77,280	77,670	78,070	78,470	78,870	79,270	79,670	80,080	80,480	80,880	81,280	81,680	25
26	73,710	74,110	74,500	74,900	75,290	75,690	76,080	76,480	76,880	77,280	77,670	78,070	78,470	78,870	79,270	79,670	80,080	80,480	80,880	81,280	81,680	26
27	73,710	74,110	74,500	74,900	75,290	75,690	76,080	76,480	76,880	77,280	77,670	78,070	78,470	78,870	79,270	79,670	80,080	80,480	80,880	81,280	81,680	27
28	73,710	74,110	74,500	74,900	75,290	75,690	76,080	76,480	76,880	77,280	77,670	78,070	78,470	78,870	79,270	79,670	80,080	80,480	80,880	81,280	81,680	28

HEADWATER ELEVATION

GATE ARRANGEMENT	806.0	806.1	806.2	806.3	806.4	806.5	806.6	806.7	806.8	806.9	807.0	807.1	807.2	807.3	807.4	807.5	807.6	807.7	807.8	807.9	808.0	GATE ARRANGEMENT
1	2,210	2,220	2,220	2,230	2,240	2,240	2,250	2,260	2,260	2,270	2,270	2,280	2,290	2,290	2,300	2,300	2,310	2,310	2,320	2,330	2,330	1
2	4,760	4,770	4,780	4,800	4,810	4,820	4,840	4,850	4,860	4,880	4,890	4,900	4,910	4,930	4,940	4,950	4,970	4,980	4,990	5,000	5,020	2
3	7,360	7,380	7,400	7,420	7,440	7,460	7,480	7,500	7,520	7,540	7,560	7,580	7,600	7,620	7,640	7,660	7,680	7,700	7,720	7,740	7,760	3
4	9,990	10,020	10,050	10,080	10,110	10,130	10,160	10,190	10,220	10,250	10,280	10,300	10,330	10,360	10,390	10,410	10,440	10,470	10,500	10,520	10,550	4
5	12,800	12,830	12,870	12,900	12,940	12,970	13,010	13,040	13,080	13,110	13,150	13,180	13,220	13,250	13,290	13,320	13,360	13,390	13,420	13,460	13,490	5
6	15,340	15,380	15,420	15,460	15,510	15,550	15,590	15,630	15,670	15,710	15,750	15,790	15,830	15,870	15,910	15,950	15,990	16,030	16,080	16,120	16,160	6
7	18,270	18,320	18,360	18,410	18,460	18,510	18,560	18,610	18,650	18,700	18,750	18,800	18,850	18,890	18,940	18,990	19,030	19,080	19,130	19,180	19,220	7
8	21,140	21,200	21,250	21,310	21,360	21,420	21,470	21,530	21,580	21,640	21,690	21,750	21,800	21,850	21,910	21,960	22,020	22,070	22,120	22,180	22,230	8
9	24,220	24,280	24,350	24,410	24,480	24,540	24,600	24,670	24,730	24,790	24,860	24,920	24,980	25,050	25,110	25,170	25,230	25,290	25,360	25,420	25,480	9
10	27,290	27,370	27,440	27,510	27,590	27,660	27,730	27,810	27,880	27,950	28,020	28,090	28,170	28,240	28,310	28,380	28,450	28,520	28,590	28,660	28,730	10
11	30,380	30,460	30,550	30,630	30,720	30,800	30,880	30,960	31,040	31,130	31,210	31,290	31,370	31,450	31,530	31,610	31,690	31,770	31,850	31,930	32,000	11
12	33,800	33,890	33,980	34,070	34,150	34,240	34,330	34,420	34,510	34,600	34,680	34,770	34,860	34,940	35,030	35,110	35,200	35,290	35,370	35,450	35,540	12
13	37,270	37,370	37,460	37,560	37,650	37,750	37,840	37,930	38,030	38,120	38,210	38,310	38,400	38,490	38,580	38,670	38,760	38,850	38,940	39,030	39,120	13
14	40,800	40,900	41,000	41,100	41,200	41,300	41,400	41,500	41,600	41,700	41,800	41,890	41,990	42,090	42,190	42,280	42,380	42,470	42,570	42,670	42,760	14
15	44,360	44,470	44,570	44,680	44,780	44,880	44,990	45,090	45,200	45,300	45,400	45,500	45,610	45,710	45,810	45,910	46,010	46,110	46,210	46,320	46,420	15
16	47,950	48,060	48,170	48,280	48,390	48,500	48,610	48,720	48,830	48,940	49,040	49,150	49,260	49,370	49,470	49,580	49,680	49,790	49,900	50,000	50,110	16
17	52,440	52,560	52,680	52,800	52,920	53,050	53,170	53,290	53,410	53,530	53,650	53,770	53,890	54,000	54,120	54,240	54,360	54,480	54,600	54,710	54,830	17
18	56,930	57,060	57,190	57,330	57,460	57,590	57,720	57,850	57,990	58,120	58,250	58,380	58,510	58,640	58,780	58,910	59,040	59,170	59,300	59,430	59,560	18
19	61,420	61,560	61,710	61,850	61,990	62,130	62,280	62,420	62,570	62,710	62,850	63,000	63,140	63,280	63,430	63,570	63,710	63,860	64,000	64,140	64,280	19
20	66,920	67,050	67,170	67,290	67,420	67,540	67,660	67,790	67,910	68,030	68,150	68,270	68,390	68,510	68,630	68,750	68,870	68,990	69,100	69,220	69,340	20
21	72,430	72,530	72,640	72,740	72,840	72,950	73,050	73,150	73,250	73,350	73,450	73,540	73,640	73,740	73,830	73,930	74,020	74,120	74,210	74,300	74,390	21
22	77,930	78,020	78,100	78,190	78,270	78,350	78,430	78,510	78,590	78,670	78,740	78,820	78,890	78,970	79,040	79,110	79,180	79,240	79,310	79,380	79,440	22
23	79,180	79,370	79,570	79,760	79,950	80,140	80,330	80,510	80,700	80,890	81,080	81,260	81,450	81,630	81,820	82,000	82,180	82,370	82,550	82,730	82,910	23
24	80,430	80,730	81,030	81,330	81,620	81,920	82,220	82,520	82,810	83,110	83,410	83,710	84,000	84,300	84,600	84,890	85,190	85,490	85,780	86,080	86,380	24
25	81,680	82,090	82,490	82,900	83,300	83,710	84,110	84,520	84,930	85,330	85,740	86,150	86,560	86,970	87,380	87,790	88,200	88,610	89,020	89,430	89,840	25
26	81,680	82,090	82,490	82,900	83,300	83,710	84,110	84,520	84,930	85,330	85,740	86,150	86,560	86,970	87,380	87,790	88,200	88,610	89,020	89,430	89,840	26
27	81,680	82,090	82,490	82,900	83,300	83,710	84,110	84,520	84,930	85,330	85,740	86,150	86,560	86,970	87,380	87,790	88,200	88,610	89,020	89,430	89,840	27
28	81,680	82,090	82,490	82,900	83,300	83,710	84,110	84,520	84,930	85,330	85,740	86,150	86,560	86,970	87,380	87,790	88,200	88,610	89,020	89,430	89,840	28

MAY 2008

HEADWATER 804 to 808
TAILWATER 787.51 to 788.5

TELLICO DAM
SPILLWAY DISCHARGE
IN CUBIC FEET PER SECOND

HEADWATER ELEVATION

GATE ARRANGEMENT	808.0	808.1	808.2	808.3	808.4	808.5	808.6	808.7	808.8	808.9	809.0	809.1	809.2	809.3	809.4	809.5	809.6	809.7	809.8	809.9	810.0	GATE ARRANGEMENT
1	2,330	2,340	2,340	2,350	2,360	2,360	2,370	2,370	2,380	2,380	2,390	2,400	2,400	2,410	2,410	2,420	2,420	2,430	2,430	2,440	2,450	1
2	5,020	5,030	5,040	5,050	5,070	5,080	5,090	5,100	5,120	5,130	5,140	5,150	5,160	5,180	5,190	5,200	5,210	5,220	5,240	5,250	5,260	2
3	7,760	7,780	7,800	7,820	7,840	7,860	7,870	7,890	7,910	7,930	7,950	7,970	7,990	8,010	8,030	8,050	8,060	8,080	8,100	8,120	8,140	3
4	10,550	10,580	10,600	10,630	10,660	10,680	10,710	10,740	10,760	10,790	10,820	10,840	10,870	10,900	10,920	10,950	10,970	11,000	11,030	11,050	11,080	4
5	13,490	13,530	13,560	13,590	13,630	13,660	13,700	13,730	13,760	13,800	13,830	13,860	13,900	13,930	13,960	14,000	14,030	14,060	14,100	14,130	14,160	5
6	16,160	16,200	16,240	16,280	16,320	16,360	16,400	16,440	16,480	16,520	16,560	16,590	16,630	16,670	16,710	16,750	16,790	16,830	16,870	16,910	16,950	6
7	19,220	19,270	19,320	19,360	19,410	19,460	19,500	19,550	19,600	19,640	19,690	19,730	19,780	19,830	19,870	19,920	19,970	20,010	20,060	20,100	20,150	7
8	22,230	22,280	22,340	22,390	22,440	22,490	22,550	22,600	22,650	22,710	22,760	22,810	22,860	22,920	22,970	23,020	23,070	23,130	23,180	23,230	23,280	8
9	25,480	25,540	25,600	25,660	25,720	25,780	25,840	25,900	25,960	26,020	26,090	26,150	26,210	26,260	26,320	26,380	26,440	26,500	26,560	26,620	26,680	9
10	28,730	28,800	28,870	28,940	29,010	29,070	29,140	29,210	29,280	29,350	29,420	29,480	29,550	29,620	29,690	29,750	29,820	29,890	29,950	30,020	30,090	10
11	32,000	32,080	32,160	32,240	32,310	32,390	32,470	32,540	32,620	32,700	32,770	32,850	32,920	33,000	33,070	33,150	33,220	33,300	33,370	33,440	33,520	11
12	35,540	35,620	35,710	35,790	35,870	35,960	36,040	36,120	36,200	36,280	36,370	36,450	36,530	36,610	36,690	36,770	36,850	36,930	37,010	37,090	37,170	12
13	39,120	39,210	39,300	39,390	39,480	39,570	39,650	39,740	39,830	39,920	40,000	40,090	40,180	40,260	40,350	40,430	40,520	40,600	40,690	40,770	40,860	13
14	42,760	42,860	42,950	43,040	43,140	43,230	43,320	43,420	43,510	43,600	43,690	43,780	43,880	43,970	44,060	44,150	44,240	44,330	44,420	44,510	44,600	14
15	46,420	46,510	46,610	46,710	46,810	46,910	47,010	47,110	47,210	47,300	47,400	47,500	47,590	47,690	47,790	47,880	47,980	48,080	48,170	48,270	48,360	15
16	50,110	50,210	50,320	50,420	50,520	50,630	50,730	50,830	50,940	51,040	51,140	51,240	51,340	51,450	51,550	51,650	51,750	51,850	51,950	52,050	52,150	16
17	54,830	54,950	55,060	55,180	55,300	55,410	55,530	55,640	55,750	55,870	55,980	56,100	56,210	56,320	56,430	56,550	56,660	56,770	56,880	56,990	57,100	17
18	59,560	59,690	59,810	59,940	60,070	60,200	60,320	60,450	60,570	60,700	60,820	60,950	61,070	61,200	61,320	61,440	61,570	61,690	61,810	61,930	62,050	18
19	64,280	64,420	64,560	64,700	64,840	64,980	65,120	65,260	65,390	65,530	65,670	65,800	65,940	66,070	66,210	66,340	66,480	66,610	66,740	66,870	67,010	19
20	69,340	69,470	69,610	69,750	69,890	70,020	70,160	70,290	70,430	70,560	70,690	70,830	70,960	71,090	71,220	71,350	71,480	71,610	71,740	71,870	72,000	20
21	74,390	74,530	74,660	74,800	74,930	75,060	75,200	75,330	75,460	75,590	75,720	75,850	75,980	76,110	76,240	76,360	76,490	76,620	76,740	76,870	76,990	21
22	79,440	79,580	79,710	79,840	79,970	80,100	80,230	80,360	80,490	80,620	80,750	80,870	81,000	81,130	81,250	81,370	81,500	81,620	81,740	81,860	81,980	22
23	82,910	83,140	83,360	83,590	83,810	84,040	84,260	84,490	84,710	84,940	85,160	85,390	85,610	85,830	86,050	86,280	86,500	86,720	86,940	87,160	87,380	23
24	86,380	86,700	87,020	87,340	87,660	87,980	88,300	88,620	88,940	89,260	89,580	89,900	90,220	90,540	90,860	91,180	91,500	91,820	92,140	92,460	92,780	24
25	89,840	90,260	90,670	91,080	91,500	91,910	92,330	92,740	93,160	93,570	93,990	94,410	94,820	95,240	95,660	96,080	96,500	96,920	97,340	97,760	98,180	25
26	89,840	90,260	90,670	91,080	91,500	91,910	92,330	92,740	93,160	93,570	93,990	94,410	94,820	95,240	95,660	96,080	96,500	96,920	97,340	97,760	98,180	26
27	89,840	90,260	90,670	91,080	91,500	91,910	92,330	92,740	93,160	93,570	93,990	94,410	94,820	95,240	95,660	96,080	96,500	96,920	97,340	97,760	98,180	27
28	89,840	90,260	90,670	91,080	91,500	91,910	92,330	92,740	93,160	93,570	93,990	94,410	94,820	95,240	95,660	96,080	96,500	96,920	97,340	97,760	98,180	28

HEADWATER ELEVATION

GATE ARRANGEMENT	810.0	810.1	810.2	810.3	810.4	810.5	810.6	810.7	810.8	810.9	811.0	811.1	811.2	811.3	811.4	811.5	811.6	811.7	811.8	811.9	812.0	GATE ARRANGEMENT
1	2,450	2,450	2,460	2,460	2,470	2,470	2,480	2,480	2,490	2,500	2,500	2,510	2,510	2,520	2,520	2,530	2,530	2,540	2,540	2,550	2,550	1
2	5,260	5,270	5,280	5,300	5,310	5,320	5,330	5,340	5,360	5,370	5,380	5,390	5,400	5,410	5,430	5,440	5,450	5,460	5,470	5,480	5,490	2
3	8,140	8,160	8,180	8,190	8,210	8,230	8,250	8,270	8,280	8,300	8,320	8,340	8,360	8,380	8,390	8,410	8,430	8,450	8,460	8,480	8,500	3
4	11,080	11,100	11,130	11,150	11,180	11,210	11,230	11,260	11,280	11,310	11,330	11,360	11,380	11,410	11,430	11,460	11,480	11,510	11,530	11,560	11,580	4
5	14,160	14,200	14,230	14,260	14,300	14,330	14,360	14,400	14,430	14,460	14,490	14,530	14,560	14,590	14,620	14,660	14,690	14,720	14,750	14,780	14,820	5
6	16,950	16,990	17,030	17,070	17,110	17,150	17,180	17,220	17,260	17,300	17,340	17,380	17,420	17,460	17,490	17,530	17,570	17,610	17,650	17,680	17,720	6
7	20,150	20,190	20,240	20,290	20,330	20,380	20,420	20,470	20,510	20,560	20,610	20,650	20,700	20,740	20,790	20,830	20,880	20,920	20,970	21,020	21,060	7
8	23,280	23,330	23,390	23,440	23,490	23,540	23,590	23,650	23,700	23,750	23,800	23,850	23,900	23,960	24,010	24,060	24,110	24,160	24,210	24,260	24,310	8
9	26,680	26,740	26,800	26,860	26,920	26,980	27,030	27,090	27,150	27,210	27,270	27,330	27,390	27,440	27,500	27,560	27,620	27,680	27,730	27,790	27,850	9
10	30,090	30,150	30,220	30,290	30,350	30,420	30,480	30,550	30,620	30,680	30,750	30,810	30,880	30,940	31,010	31,070	31,140	31,210	31,270	31,340	31,400	10
11	33,520	33,590	33,660	33,740	33,810	33,880	33,960	34,030	34,100	34,170	34,250	34,320	34,390	34,460	34,540	34,610	34,680	34,750	34,830	34,900	34,970	11
12	37,170	37,250	37,330	37,410	37,490	37,560	37,640	37,720	37,800	37,880	37,960	38,030	38,110	38,190	38,270	38,350	38,430	38,500	38,580	38,660	38,740	12
13	40,860	40,940	41,030	41,110	41,200	41,280	41,360	41,450	41,530	41,620	41,700	41,780	41,870	41,950	42,030	42,120	42,200	42,280	42,370	42,450	42,530	13
14	44,600	44,690	44,780	44,870	44,960	45,040	45,130	45,220	45,310	45,400	45,490	45,580	45,660	45,750	45,840	45,930	46,010	46,100	46,190	46,280	46,370	14
15	48,360	48,460	48,550	48,650	48,740	48,840	48,930	49,030	49,120	49,210	49,310	49,400	49,490	49,590	49,680	49,780	49,870	49,960	50,060	50,150	50,240	15
16	52,150	52,250	52,350	52,450	52,550	52,650	52,750	52,850	52,940	53,040	53,140	53,240	53,340	53,440	53,530	53,630	53,730	53,830	53,930	54,020	54,120	16
17	57,100	57,210	57,320	57,430	57,540	57,650	57,760	57,870	57,980	58,090	58,200	58,310	58,420	58,530	58,640	58,750	58,850	58,960	59,070	59,180	59,290	17
18	62,050	62,180	62,300	62,420	62,540	62,660	62,780	62,900	63,020	63,140	63,260	63,380	63,500	63,620	63,740	63,860	63,980	64,100	64,220	64,340	64,450	18
19	67,010	67,140	67,270	67,400	67,530	67,670	67,800	67,930	68,060	68,190	68,320	68,450	68,580	68,710	68,840	68,970	69,100	69,230	69,360	69,490	69,620	19
20	72,000	72,130	72,250	72,380	72,510	72,640	72,760	72,890	73,010	73,140	73,260	73,390	73,510	73,640	73,760	73,890	74,010	74,130	74,260	74,380	74,500	20
21	76,990	77,110	77,240	77,360	77,480	77,610	77,730	77,850	77,970	78,090	78,210	78,330	78,450	78,560	78,680	78,800	78,920	79,030	79,150	79,270	79,380	21
22	81,980	82,100	82,220	82,340	82,460	82,580	82,690	82,810	82,920	83,040	83,150	83,270	83,380	83,490	83,600	83,710	83,820	83,930	84,040	84,150	84,260	22
23	87,380	87,600	87,820	88,040	88,210	88,370	88,530	88,690	88,850	89,000	89,160	89,310	89,470	89,620	89,780	89,930	90,080	90,230	90,380	90,530	90,680	23
24	92,780	93,100	93,420	93,740	93,970	94,170	94,370	94,570	94,770	94,970	95,170	95,360	95,560	95,750	95,950	96,140	96,340	96,530	96,720	96,920	97,110	24
25	98,180	98,600	99,020	99,450	99,720	99,970	100,200	100,500	100,700	100,900	101,200	101,400	101,600	101,900	102,100	102,400	102,600	102,800	103,100	103,300	103,500	25
26	98,180	98,600	99,020	99,450	99,770	100,100	100,400	100,700	101,000	101,300	101,600	101,900	102,200	102,500	102,800	103,100	103,400	103,700	104,000	104,300	104,600	26
27	98,180	98,600	99,020	99,450	99,820	100,200	100,500	100,900	101,300	101,600	102,000	102,400	102,700	103,100	103,500	103,800	104,200	104,500	104,900	105,300	105,600	27
28	98,180	98,600	99,020	99,450	99,870	100,300	100,700	101,100	101,600	102,000	102,400	102,800	103,300	103,700	104,100	104,500	105,000	105,400	105,800	106,300	106,700	28

HEADWATER 808 to 812
TAILWATER 787.51 to 788.5

MAY 2008

TELLICO DAM
SPILLWAY DISCHARGE
IN CUBIC FEET PER SECOND

HEADWATER ELEVATION

GATE ARRANGEMENT	812.0	812.1	812.2	812.3	812.4	812.5	812.6	812.7	812.8	812.9	813.0	813.1	813.2	813.3	813.4	813.5	813.6	813.7	813.8	813.9	814.0	GATE ARRANGEMENT
1	2,550	2,560	2,570	2,570	2,580	2,580	2,590	2,590	2,600	2,600	2,610	2,610	2,620	2,620	2,630	2,630	2,640	2,640	2,650	2,650	2,660	1
2	5,490	5,510	5,520	5,530	5,540	5,550	5,560	5,570	5,590	5,600	5,610	5,620	5,630	5,640	5,650	5,660	5,670	5,690	5,700	5,710	5,720	2
3	8,500	8,520	8,540	8,550	8,570	8,590	8,610	8,620	8,640	8,660	8,680	8,690	8,710	8,730	8,740	8,760	8,780	8,800	8,810	8,830	8,850	3
4	11,580	11,600	11,630	11,650	11,680	11,700	11,730	11,750	11,780	11,800	11,820	11,850	11,870	11,900	11,920	11,940	11,970	11,990	12,020	12,040	12,060	4
5	14,820	14,850	14,880	14,910	14,940	14,980	15,010	15,040	15,070	15,100	15,130	15,160	15,200	15,230	15,260	15,290	15,320	15,350	15,380	15,410	15,440	5
6	17,720	17,760	17,800	17,840	17,870	17,910	17,950	17,990	18,020	18,060	18,100	18,130	18,170	18,210	18,240	18,280	18,320	18,360	18,390	18,430	18,460	6
7	21,060	21,110	21,150	21,200	21,240	21,290	21,330	21,380	21,420	21,470	21,510	21,560	21,600	21,650	21,690	21,740	21,780	21,830	21,870	21,910	21,960	7
8	24,310	24,360	24,420	24,470	24,520	24,570	24,620	24,670	24,720	24,770	24,820	24,870	24,920	24,970	25,020	25,070	25,120	25,170	25,220	25,270	25,320	8
9	27,850	27,910	27,970	28,030	28,080	28,140	28,200	28,260	28,310	28,370	28,430	28,490	28,550	28,600	28,660	28,720	28,780	28,830	28,890	28,950	29,000	9
10	31,400	31,470	31,530	31,600	31,660	31,730	31,790	31,860	31,930	31,990	32,060	32,120	32,190	32,250	32,320	32,380	32,450	32,510	32,570	32,640	32,700	10
11	34,970	35,040	35,120	35,190	35,260	35,330	35,410	35,480	35,550	35,620	35,700	35,770	35,840	35,910	35,980	36,060	36,130	36,200	36,270	36,340	36,420	11
12	38,740	38,820	38,890	38,970	39,050	39,130	39,210	39,280	39,360	39,440	39,520	39,590	39,670	39,750	39,830	39,900	39,980	40,060	40,140	40,210	40,290	12
13	42,530	42,620	42,700	42,780	42,870	42,950	43,030	43,120	43,200	43,280	43,360	43,450	43,530	43,610	43,700	43,780	43,860	43,940	44,030	44,110	44,190	13
14	46,370	46,450	46,540	46,630	46,720	46,800	46,890	46,980	47,070	47,150	47,240	47,330	47,420	47,500	47,590	47,680	47,760	47,850	47,940	48,020	48,110	14
15	50,240	50,330	50,430	50,520	50,610	50,710	50,800	50,890	50,980	51,080	51,170	51,260	51,350	51,440	51,540	51,630	51,720	51,810	51,900	51,990	52,080	15
16	54,120	54,220	54,320	54,410	54,510	54,610	54,700	54,800	54,900	54,990	55,090	55,190	55,280	55,380	55,480	55,570	55,670	55,760	55,860	55,950	56,050	16
17	59,290	59,400	59,500	59,610	59,720	59,830	59,940	60,040	60,150	60,260	60,370	60,480	60,580	60,690	60,800	60,900	61,010	61,110	61,220	61,330	61,430	17
18	64,450	64,570	64,690	64,810	64,930	65,050	65,170	65,290	65,410	65,530	65,640	65,760	65,880	66,000	66,120	66,230	66,350	66,470	66,580	66,700	66,810	18
19	69,620	69,750	69,880	70,010	70,140	70,270	70,400	70,530	70,660	70,790	70,920	71,050	71,180	71,310	71,440	71,560	71,690	71,820	71,940	72,070	72,200	19
20	74,500	74,640	74,780	74,910	75,050	75,190	75,320	75,460	75,600	75,730	75,870	76,000	76,140	76,270	76,410	76,540	76,680	76,810	76,940	77,080	77,210	20
21	79,380	79,530	79,670	79,810	79,960	80,100	80,250	80,390	80,530	80,670	80,820	80,960	81,100	81,240	81,380	81,520	81,660	81,800	81,940	82,080	82,220	21
22	84,260	84,410	84,560	84,720	84,870	85,020	85,170	85,320	85,470	85,620	85,760	85,910	86,060	86,210	86,350	86,500	86,650	86,790	86,940	87,080	87,230	22
23	90,680	90,810	90,940	91,060	91,190	91,310	91,440	91,560	91,680	91,800	91,920	92,040	92,160	92,280	92,400	92,520	92,630	92,750	92,870	92,980	93,090	23
24	97,110	97,210	97,310	97,410	97,510	97,610	97,700	97,800	97,890	97,990	98,080	98,170	98,260	98,360	98,440	98,530	98,620	98,710	98,790	98,880	98,960	24
25	103,500	103,600	103,700	103,800	103,800	103,900	104,000	104,000	104,100	104,200	104,200	104,300	104,400	104,400	104,500	104,500	104,600	104,700	104,700	104,800	104,800	25
26	104,600	104,800	105,000	105,200	105,400	105,500	105,700	105,900	106,100	106,300	106,500	106,700	106,900	107,100	107,200	107,400	107,600	107,800	108,000	108,200	108,300	26
27	105,600	105,900	106,300	106,600	106,900	107,200	107,500	107,800	108,100	108,400	108,700	109,100	109,400	109,700	110,000	110,300	110,600	110,900	111,200	111,500	111,900	27
28	106,700	107,100	107,500	108,000	108,400	108,800	109,300	109,700	110,100	110,600	111,000	111,400	111,900	112,300	112,700	113,200	113,600	114,100	114,500	114,900	115,400	28

HEADWATER ELEVATION

GATE ARRANGEMENT	814.0	814.1	814.2	814.3	814.4	814.5	814.6	814.7	814.8	814.9	815.0	815.1	815.2	815.3	815.4	815.5	815.6	815.7	815.8	815.9	816.0	GATE ARRANGEMENT
1	2,660	2,660	2,670	2,670	2,680	2,680	2,690	2,690	2,700	2,700	2,710	2,710	2,720	2,720	2,730	2,730						1
2	5,720	5,730	5,740	5,750	5,760	5,770	5,780	5,800	5,810	5,820	5,830	5,840	5,850	5,860	5,870	5,880	5,890	5,900	5,910	5,920	5,940	2
3	8,850	8,860	8,880	8,900	8,910	8,930	8,950	8,970	8,980	9,000	9,020	9,030	9,050	9,070	9,080	9,100	9,120	9,130	9,150	9,160	9,180	3
4	12,060	12,090	12,110	12,130	12,160	12,180	12,200	12,230	12,250	12,280	12,300	12,320	12,350	12,370	12,390	12,420	12,440	12,460	12,480	12,510	12,530	4
5	15,440	15,470	15,500	15,530	15,560	15,600	15,630	15,660	15,690	15,720	15,750	15,780	15,810	15,840	15,870	15,900	15,930	15,960	15,990	16,010	16,040	5
6	18,460	18,500	18,540	18,570	18,610	18,650	18,680	18,720	18,750	18,790	18,830	18,860	18,900	18,930	18,970	19,010	19,040	19,080	19,110	19,150	19,180	6
7	21,960	22,000	22,050	22,090	22,130	22,180	22,220	22,260	22,310	22,350	22,390	22,440	22,480	22,520	22,560	22,610	22,650	22,690	22,730	22,770	22,820	7
8	25,320	25,370	25,420	25,470	25,520	25,570	25,620	25,660	25,710	25,760	25,810	25,860	25,900	25,950	26,000	26,050	26,090	26,140	26,190	26,240	26,280	8
9	29,000	29,060	29,120	29,170	29,230	29,290	29,340	29,400	29,450	29,510	29,570	29,620	29,680	29,730	29,790	29,840	29,900	29,950	30,000	30,060	30,110	9
10	32,700	32,770	32,830	32,900	32,960	33,020	33,090	33,150	33,210	33,280	33,340	33,400	33,460	33,530	33,590	33,650	33,710	33,770	33,830	33,900	33,960	10
11	36,420	36,490	36,560	36,630	36,700	36,770	36,840	36,910	36,980	37,050	37,120	37,190	37,260	37,330	37,400	37,470	37,540	37,610	37,670	37,740	37,810	11
12	40,290	40,370	40,440	40,520	40,600	40,670	40,750	40,820	40,900	40,980	41,050	41,130	41,200	41,270	41,350	41,420	41,500	41,570	41,640	41,720	41,790	12
13	44,190	44,270	44,350	44,440	44,520	44,600	44,680	44,760	44,840	44,920	45,000	45,080	45,160	45,240	45,320	45,400	45,470	45,550	45,630	45,710	45,780	13
14	48,110	48,200	48,280	48,370	48,450	48,540	48,620	48,710	48,790	48,880	48,960	49,050	49,130	49,220	49,300	49,380	49,470	49,550	49,630	49,710	49,800	14
15	52,080	52,170	52,260	52,350	52,440	52,530	52,620	52,710	52,800	52,890	52,980	53,070	53,160	53,240	53,330	53,420	53,500	53,590	53,680	53,760	53,850	15
16	56,050	56,140	56,240	56,330	56,430	56,520	56,610	56,710	56,800	56,890	56,980	57,070	57,170	57,260	57,350	57,440	57,530	57,620	57,710	57,800	57,890	16
17	61,430	61,540	61,640	61,740	61,850	61,950	62,050	62,160	62,260	62,360	62,460	62,560	62,660	62,760	62,860	62,960	63,060	63,160	63,250	63,350	63,440	17
18	66,810	66,930	67,040	67,160	67,270	67,380	67,500	67,610	67,720	67,830	67,940	68,050	68,160	68,270	68,380	68,480	68,590	68,690	68,800	68,900	69,000	18
19	72,200	72,320	72,450	72,570	72,690	72,820	72,940	73,060	73,180	73,300	73,420	73,540	73,660	73,770	73,890	74,000	74,120	74,230	74,340	74,450	74,560	19
20	77,210	77,340	77,470	77,600	77,730	77,860	77,990	78,120	78,250	78,370	78,500	78,630	78,750	78,880	79,000	79,120	79,240	79,370	79,490	79,610	79,730	20
21	82,220	82,360	82,490	82,630	82,770	82,900	83,040	83,180	83,310	83,450	83,580	83,710	83,850	83,980	84,110	84,240	84,370	84,500	84,630	84,760	84,890	21
22	87,230	87,370	87,520	87,660	87,810	87,950	88,090	88,230	88,380	88,520	88,660	88,800	88,940	89,080	89,220	89,360	89,500	89,640	89,780	89,920	90,050	22
23	93,090	93,220	93,350	93,480	93,610	93,730	93,860	93,990	94,110	94,230	94,360	94,480	94,600	94,730	94,850	94,970	95,090	95,210	95,330	95,450	95,570	23
24	98,960	99,070	99,190	99,300	99,410	99,520	99,630	99,740	99,840	99,950	100,100	100,200	100,300	100,400	100,500	100,600	100,700	100,800	100,900	101,000	101,100	24
25	104,800	104,900	105,000	105,100	105,200	105,300	105,400	105,500	105,600	105,700	105,800	105,800	105,900	106,000	106,100	106,200	106,300	106,400	106,400	106,500	106,600	25
26	108,300	108,600	108,800	109,000	109,200	109,400	109,600	109,800	110,000	110,200	110,800	110,800	110,900	110,900	111,000	111,100	111,100	111,200	111,200	111,300	111,300	26
27	111,900	112,200	112,500	112,800	113,200	113,500	113,800	114,100	114,400	114,800	115,800	115,800	115,800	115,900	115,900	115,900	116,000	116,000	116,000	116,100	116,100	27
28	115,400	115,800	116,200	116,700	117,100	117,600	118,000	118,400	118,900	119,300	120,800	120,800	120,800	120,800	120,800	120,800	120,800	120,800	120,800	120,800	120,800	28

MAY 2008

See special instruction for preventing gate overflow on page 2.

HEADWATER 812 to 816
TAILWATER 787.51 to 788.5

TELLICO DAM
SPILLWAY DISCHARGE
IN CUBIC FEET PER SECOND

HEADWATER ELEVATION

GATE ARRANGEMENT	816.0	816.1	816.2	816.3	816.4	816.5	816.6	816.7	816.8	816.9	817.0	817.1	817.2	817.3	817.4	817.5	817.6	817.7	817.8	817.9	818.0	GATE ARRANGEMENT
1																						1
2	5,940	5,950	5,960																			2
3	9,180	9,200	9,210	9,230	9,250	9,260	9,280	9,300	9,310	9,330	9,340											3
4	12,530	12,550	12,580	12,600	12,620	12,650	12,670	12,690	12,720	12,740	12,760	12,970	13,330	13,800	14,350	14,970	15,670	16,420				4
5	16,040	16,070	16,100	16,130	16,160	16,190	16,220	16,250	16,280	16,310	16,340	16,550	16,920	17,390	17,950	18,580	19,280	20,040	20,860	21,740	22,670	5
6	19,180	19,220	19,260	19,290	19,330	19,360	19,400	19,430	19,470	19,500	19,540	19,760	20,130	20,610	21,170	21,810	22,520	23,280	24,110	25,000	25,930	6
7	22,820	22,860	22,900	22,940	22,980	23,020	23,060	23,100	23,140	23,180	23,220	23,440	23,820	24,300	24,870	25,510	26,220	26,990	27,820	28,710	29,650	7
8	26,280	26,330	26,380	26,420	26,470	26,510	26,560	26,600	26,650	26,690	26,740	26,970	27,350	27,840	28,410	29,060	29,770	30,550	31,390	32,280	33,230	8
9	30,110	30,170	30,220	30,270	30,330	30,380	30,430	30,480	30,540	30,590	30,640	30,880	31,270	31,760	32,340	32,990	33,710	34,500	35,340	36,240	37,190	9
10	33,960	34,020	34,080	34,140	34,200	34,260	34,310	34,370	34,430	34,490	34,550	34,790	35,190	35,690	36,270	36,930	37,660	38,450	39,300	40,210	41,170	10
11	37,810	37,880	37,940	38,010	38,080	38,140	38,210	38,270	38,340	38,410	38,470	38,720	39,120	39,630	40,220	40,890	41,620	42,420	43,270	44,190	45,150	11
12	41,790	41,860	41,930	42,000	42,070	42,150	42,220	42,290	42,360	42,430	42,500	42,750	43,160	43,670	44,260	44,940	45,670	46,470	47,340	48,250	49,220	12
13	45,780	45,860	45,940	46,010	46,090	46,160	46,240	46,310	46,390	46,460	46,530	46,790	47,200	47,720	48,320	48,990	49,740	50,540	51,410	52,330	53,300	13
14	49,800	49,880	49,960	50,040	50,120	50,200	50,280	50,360	50,440	50,520	50,600	50,860	51,280	51,800	52,410	53,090	53,840	54,650	55,520	56,440	57,420	14
15	53,850	53,930	54,020	54,100	54,190	54,270	54,350	54,440	54,520	54,600	54,680	54,950	55,370	55,890	56,500	57,180	57,940	58,750	59,620	60,550	61,530	15
16	57,890	57,970	58,060	58,150	58,240	58,320	58,410	58,490	58,580	58,660	58,750	59,020	59,440	59,970	60,580	61,260	62,020	62,830	63,710	64,640	65,620	16
17	63,440	63,540	63,630	63,730	63,820	63,910	64,000	64,090	64,180	64,270	64,360	64,640	65,060	65,590	66,210	66,900	67,650	68,470	69,350	70,290	71,270	17
18	69,000	69,100	69,200	69,300	69,400	69,500	69,600	69,690	69,790	69,880	69,980	70,260	70,690	71,220	71,840	72,530	73,290	74,110	75,000	75,930	76,920	18
19	74,560	74,670	74,780	74,880	74,990	75,090	75,190	75,290	75,400	75,490	75,590	75,880	76,310	76,850	77,470	78,170	78,930	79,760	80,640	81,580	82,570	19
20	79,730	79,850	79,970	80,090	80,210	80,320	80,440	80,560	80,670	80,790	80,900	81,200	81,650	82,210	82,850	83,560	84,340	85,180	86,080	87,040	88,050	20
21	84,890	85,020	85,160	85,290	85,430	85,560	85,690	85,820	85,950	86,080	86,210	86,530	87,000	87,570	88,220	88,950	89,750	90,610	91,530	92,500	93,530	21
22	90,050	90,200	90,350	90,500	90,650	90,790	90,940	91,090	91,230	91,380	91,520	91,850	92,340	92,930	93,600	94,340	95,160	96,040	96,970	97,960	99,010	22
23	95,570	95,710	95,860	96,000	96,140	96,290	96,430	96,570	96,710	96,850	96,990	97,320	97,800	98,380	99,040	99,790	100,600	101,500	102,400	103,400	104,400	23
24	101,100	101,200	101,400	101,500	101,600	101,800	101,900	102,100	102,200	102,300	102,500	102,800	103,300	103,800	104,500	105,200	106,000	106,900	107,800	108,800	109,800	24
25	106,600	106,700	106,900	107,000	107,100	107,300	107,400	107,500	107,700	107,800	107,900	108,200	108,700	109,300	109,900	110,700	111,500	112,300	113,200	114,200	115,200	25
26	111,300	111,400	111,500	111,600	111,700	111,800	111,900	112,000	112,100	112,200	112,300	112,500	113,000	113,500	114,100	114,800	115,600	116,400	117,300	118,200	119,200	26
27	116,100	116,100	116,200	116,200	116,300	116,300	116,400	116,400	116,500	116,500	116,600	116,800	117,200	117,700	118,300	119,000	119,700	120,500	121,300	122,200	123,200	27
28	120,800	120,800	120,900	120,900	120,900	120,900	120,900	120,900	120,900	120,900	120,900	121,100	121,500	121,900	122,500	123,100	123,800	124,500	125,300	126,200	127,100	28

HEADWATER ELEVATION

GATE ARRANGEMENT	818.0	818.1	818.2	818.3	818.4	818.5	818.6	818.7	818.8	818.9	819.0	819.1	819.2	819.3	819.4	819.5	819.6	819.7	819.8	819.9	820.0	GATE ARRANGEMENT
1																						1
2																						2
3																						3
4																						4
5	22,670	23,650	24,690	25,770	26,900																	5
6	25,930	26,920	27,970	29,050	30,190	31,370	32,600	33,870	35,190	36,550	37,950	39,390										6
7	29,650	30,640	31,690	32,780	33,920	35,100	36,330	37,610	38,930	40,290	41,690	43,130	44,620	46,140	47,700	49,310	50,950	52,620	54,340			7
8	33,230	34,220	35,270	36,370	37,520	38,710	39,940	41,220	42,550	43,910	45,320	46,770	48,260	49,790	51,360	52,960	54,610	56,300	58,020	59,780	61,570	8
9	37,190	38,200	39,260	40,360	41,510	42,710	43,950	45,240	46,570	47,940	49,360	50,810	52,310	53,840	55,420	57,030	58,690	60,380	62,110	63,870	65,670	9
10	41,170	42,180	43,240	44,350	45,510	46,710	47,960	49,250	50,590	51,970	53,390	54,850	56,350	57,890	59,480	61,100	62,760	64,450	66,190	67,960	69,770	10
11	45,150	46,170	47,240	48,350	49,520	50,730	51,980	53,280	54,620	56,010	57,430	58,900	60,410	61,960	63,540	65,170	66,840	68,540	70,280	72,060	73,870	11
12	49,220	50,240	51,320	52,440	53,610	54,820	56,080	57,380	58,730	60,120	61,550	63,020	64,530	66,090	67,680	69,310	70,980	72,680	74,430	76,210	78,030	12
13	53,300	54,330	55,400	56,530	57,700	58,910	60,180	61,480	62,830	64,230	65,660	67,140	68,650	70,210	71,800	73,440	75,110	76,820	78,570	80,350	82,170	13
14	57,420	58,460	59,540	60,670	61,850	63,070	64,340	65,650	67,010	68,410	69,850	71,330	72,850	74,410	76,010	77,650	79,330	81,050	82,800	84,590	86,420	14
15	61,530	62,570	63,650	64,780	65,960	67,190	68,460	69,780	71,130	72,540	73,980	75,460	76,990	78,550	80,150	81,800	83,480	85,190	86,950	88,740	90,570	15
16	65,620	66,660	67,750	68,880	70,060	71,290	72,560	73,880	75,240	76,640	78,090	79,570	81,100	82,660	84,270	85,910	87,600	89,320	91,070	92,870	94,700	16
17	71,270	72,310	73,400	74,540	75,720	76,950	78,230	79,550	80,910	82,310	83,760	85,240	86,770	88,340	89,940	91,590	93,270	94,990	96,750	98,550	100,400	17
18	76,920	77,960	79,060	80,200	81,380	82,610	83,890	85,210	86,580	87,980	89,430	90,920	92,440	94,010	95,620	97,270	98,950	100,700	102,400	104,200	106,100	18
19	82,570	83,620	84,710	85,850	87,040	88,280	89,550	90,880	92,240	93,650	95,100	96,590	98,120	99,690	101,300	102,900	104,600	106,300	108,100	109,900	111,700	19
20	88,050	89,110	90,230	91,390	92,590	93,850	95,140	96,480	97,870	99,290	100,800	102,300	103,800	105,400	107,000	108,700	110,400	112,100	113,900	115,700	117,600	20
21	93,530	94,610	95,740	96,920	98,140	99,420	100,700	102,100	103,500	104,900	106,400	108,000	109,500	111,100	112,800	114,500	116,200	117,900	119,700	121,600	123,500	21
22	99,010	100,100	101,300	102,500	103,700	105,000	106,300	107,700	109,100	110,600	112,100	113,600	115,200	116,800	118,500	120,200	122,000	123,700	125,600	127,400	129,300	22
23	104,400	105,500	106,700	107,900	109,100	110,400	111,800	113,200	114,600	116,100	117,600	119,100	120,700	122,400	124,000	125,700	127,500	129,300	131,100	133,000	134,900	23
24	109,800	110,900	112,100	113,300	114,600	115,900	117,200	118,600	120,100	121,500	123,100	124,600	126,200	127,900	129,500	131,300	133,000	134,800	136,600	138,500	140,400	24
25	115,200	116,400	117,500	118,800	120,000	121,300	122,700	124,100	125,500	127,000	128,500	130,100	131,700	133,400	135,000	136,800	138,500	140,300	142,200	144,000	146,000	25
26	119,200	120,300	121,500	122,800	124,000	125,400	126,700	128,100	129,600	131,100	132,600	134,200	135,800	137,500	139,200	141,000	142,700	144,500	146,400	148,300	150,200	26
27	123,200	124,300	125,500	126,800	128,100	129,400	130,800	132,200	133,700	135,200	136,700	138,300	140,000	141,700	143,400	145,100	146,900	148,700	150,600	152,500	154,500	27
28	127,100	128,300	129,500	130,800	132,100	133,400	134,800	136,300	137,800	139,300	140,900	142,500	144,100	145,800	147,500	149,300	151,100	153,000	154,800	156,800	158,700	28

HEADWATER 816 to 820
TAILWATER 787.51 to 788.5

See special instruction for preventing gate overflow on page 2.

MAY 2008

TELLICO DAM
SPILLWAY DISCHARGE
IN CUBIC FEET PER SECOND

HEADWATER ELEVATION

GATE ARRANGEMENT	800.0	800.1	800.2	800.3	800.4	800.5	800.6	800.7	800.8	800.9	801.0	801.1	801.2	801.3	801.4	801.5	801.6	801.7	801.8	801.9	802.0	GATE ARRANGEMENT
1	1,730	1,740	1,750	1,750	1,760	1,770	1,780	1,780	1,790	1,800	1,810	1,810	1,820	1,830	1,840	1,840	1,850	1,860	1,870	1,870	1,880	1
2	3,720	3,740	3,750	3,770	3,790	3,800	3,820	3,840	3,850	3,870	3,890	3,900	3,920	3,930	3,950	3,970	3,980	4,000	4,010	4,030	4,040	2
3	5,750	5,780	5,800	5,830	5,850	5,880	5,900	5,930	5,950	5,980	6,000	6,030	6,050	6,080	6,100	6,130	6,150	6,180	6,200	6,230	6,250	3
4	7,780	7,810	7,850	7,880	7,920	7,950	7,990	8,020	8,060	8,090	8,130	8,160	8,200	8,230	8,260	8,300	8,330	8,370	8,400	8,430	8,470	4
5	10,010	10,060	10,100	10,140	10,180	10,230	10,270	10,310	10,350	10,400	10,440	10,480	10,530	10,570	10,610	10,650	10,700	10,740	10,780	10,830	10,870	5
6	12,070	12,120	12,170	12,220	12,270	12,320	12,370	12,420	12,470	12,520	12,570	12,620	12,670	12,720	12,770	12,820	12,870	12,920	12,960	13,010	13,060	6
7	14,370	14,420	14,480	14,540	14,600	14,660	14,720	14,780	14,840	14,900	14,960	15,020	15,070	15,130	15,190	15,250	15,310	15,370	15,430	15,490	15,540	7
8	16,600	16,670	16,740	16,810	16,880	16,950	17,020	17,080	17,150	17,220	17,290	17,360	17,430	17,500	17,560	17,630	17,700	17,770	17,840	17,910	17,970	8
9	18,930	19,000	19,080	19,160	19,240	19,320	19,400	19,470	19,550	19,630	19,710	19,790	19,870	19,940	20,020	20,100	20,180	20,260	20,330	20,410	20,490	9
10	21,230	21,320	21,400	21,490	21,580	21,670	21,760	21,850	21,930	22,020	22,110	22,200	22,290	22,380	22,470	22,550	22,640	22,730	22,820	22,910	22,990	10
11	23,500	23,600	23,700	23,800	23,900	23,990	24,090	24,190	24,290	24,390	24,490	24,580	24,680	24,780	24,880	24,980	25,080	25,170	25,270	25,370	25,470	11
12	26,570	26,670	26,780	26,890	26,990	27,100	27,200	27,310	27,410	27,520	27,620	27,730	27,830	27,940	28,040	28,150	28,260	28,360	28,470	28,570	28,670	12
13	29,720	29,830	29,950	30,060	30,170	30,280	30,400	30,510	30,620	30,740	30,850	30,960	31,070	31,180	31,300	31,410	31,520	31,630	31,750	31,860	31,970	13
14	32,990	33,110	33,230	33,340	33,460	33,580	33,700	33,820	33,940	34,060	34,170	34,290	34,410	34,530	34,650	34,760	34,880	35,000	35,120	35,230	35,350	14
15	36,320	36,450	36,570	36,700	36,830	36,950	37,080	37,200	37,330	37,450	37,570	37,700	37,820	37,950	38,070	38,190	38,320	38,440	38,570	38,690	38,810	15
16	39,690	39,820	39,950	40,090	40,220	40,350	40,490	40,620	40,750	40,880	41,010	41,140	41,280	41,410	41,540	41,670	41,800	41,930	42,060	42,190	42,320	16
17	44,480	44,610	44,730	44,860	44,980	45,100	45,230	45,350	45,470	45,600	45,720	45,840	45,960	46,080	46,200	46,330	46,450	46,570	46,690	46,810	46,930	17
18	49,280	49,390	49,510	49,630	49,740	49,860	49,970	50,080	50,200	50,310	50,420	50,540	50,650	50,760	50,870	50,980	51,090	51,210	51,320	51,430	51,540	18
19	54,070	54,180	54,290	54,390	54,500	54,610	54,710	54,820	54,920	55,030	55,130	55,230	55,330	55,440	55,540	55,640	55,740	55,850	55,950	56,050	56,150	19
20	55,350	55,540	55,740	55,940	56,140	56,340	56,530	56,730	56,920	57,120	57,320	57,510	57,710	57,900	58,100	58,300	58,490	58,690	58,880	59,080	59,280	20
21	56,620	56,910	57,200	57,490	57,770	58,060	58,350	58,640	58,930	59,220	59,500	59,790	60,080	60,370	60,660	60,950	61,240	61,530	61,820	62,110	62,400	21
22	57,900	58,280	58,650	59,030	59,410	59,790	60,170	60,550	60,930	61,310	61,690	62,070	62,450	62,840	63,220	63,600	63,990	64,370	64,760	65,140	65,530	22
23	57,900	58,280	58,650	59,030	59,410	59,790	60,170	60,550	60,930	61,310	61,690	62,070	62,450	62,840	63,220	63,600	63,990	64,370	64,760	65,140	65,530	23
24	57,900	58,280	58,650	59,030	59,410	59,790	60,170	60,550	60,930	61,310	61,690	62,070	62,450	62,840	63,220	63,600	63,990	64,370	64,760	65,140	65,530	24
25	57,900	58,280	58,650	59,030	59,410	59,790	60,170	60,550	60,930	61,310	61,690	62,070	62,450	62,840	63,220	63,600	63,990	64,370	64,760	65,140	65,530	25
26	57,900	58,280	58,650	59,030	59,410	59,790	60,170	60,550	60,930	61,310	61,690	62,070	62,450	62,840	63,220	63,600	63,990	64,370	64,760	65,140	65,530	26
27	57,900	58,280	58,650	59,030	59,410	59,790	60,170	60,550	60,930	61,310	61,690	62,070	62,450	62,840	63,220	63,600	63,990	64,370	64,760	65,140	65,530	27
28	57,900	58,280	58,650	59,030	59,410	59,790	60,170	60,550	60,930	61,310	61,690	62,070	62,450	62,840	63,220	63,600	63,990	64,370	64,760	65,140	65,530	28

HEADWATER ELEVATION

GATE ARRANGEMENT	802.0	802.1	802.2	802.3	802.4	802.5	802.6	802.7	802.8	802.9	803.0	803.1	803.2	803.3	803.4	803.5	803.6	803.7	803.8	803.9	804.0	GATE ARRANGEMENT
1	1,880	1,890	1,890	1,900	1,910	1,920	1,920	1,930	1,940	1,940	1,950	1,960	1,970	1,970	1,980	1,990	1,990	2,000	2,010	2,010	2,020	1
2	4,040	4,060	4,080	4,090	4,110	4,120	4,140	4,150	4,170	4,180	4,200	4,210	4,230	4,240	4,260	4,270	4,290	4,300	4,310	4,330	4,340	2
3	6,250	6,270	6,300	6,320	6,350	6,370	6,390	6,420	6,440	6,460	6,490	6,510	6,530	6,560	6,580	6,600	6,620	6,650	6,670	6,690	6,710	3
4	8,470	8,500	8,530	8,570	8,600	8,630	8,660	8,700	8,730	8,760	8,790	8,830	8,860	8,890	8,920	8,960	8,990	9,020	9,050	9,080	9,110	4
5	10,870	10,910	10,950	10,990	11,040	11,080	11,120	11,160	11,200	11,250	11,290	11,330	11,370	11,410	11,450	11,490	11,530	11,580	11,620	11,660	11,700	5
6	13,060	13,110	13,160	13,210	13,260	13,310	13,360	13,410	13,450	13,500	13,550	13,600	13,650	13,700	13,740	13,790	13,840	13,880	13,930	13,980	14,030	6
7	15,540	15,600	15,660	15,720	15,780	15,840	15,890	15,950	16,010	16,060	16,120	16,180	16,240	16,290	16,350	16,400	16,460	16,510	16,570	16,620	16,680	7
8	17,970	18,040	18,110	18,180	18,240	18,310	18,380	18,440	18,510	18,570	18,640	18,710	18,770	18,840	18,900	18,960	19,030	19,090	19,160	19,220	19,280	8
9	20,490	20,570	20,640	20,720	20,800	20,880	20,950	21,030	21,110	21,180	21,260	21,330	21,410	21,480	21,560	21,630	21,710	21,780	21,850	21,930	22,000	9
10	22,990	23,080	23,170	23,260	23,340	23,430	23,520	23,610	23,690	23,780	23,870	23,950	24,040	24,120	24,210	24,290	24,380	24,460	24,550	24,630	24,710	10
11	25,470	25,570	25,660	25,760	25,860	25,960	26,050	26,150	26,250	26,350	26,440	26,540	26,640	26,730	26,830	26,920	27,020	27,120	27,210	27,310	27,400	11
12	28,670	28,780	28,880	28,990	29,090	29,200	29,300	29,400	29,510	29,610	29,720	29,820	29,920	30,020	30,130	30,230	30,330	30,430	30,530	30,630	30,740	12
13	31,970	32,080	32,190	32,300	32,410	32,520	32,630	32,740	32,850	32,960	33,070	33,180	33,290	33,400	33,510	33,620	33,720	33,830	33,940	34,050	34,150	13
14	35,350	35,470	35,590	35,700	35,820	35,930	36,050	36,170	36,280	36,400	36,510	36,630	36,740	36,860	36,970	37,080	37,200	37,310	37,420	37,530	37,650	14
15	38,810	38,930	39,060	39,180	39,300	39,420	39,540	39,660	39,780	39,900	40,020	40,140	40,260	40,380	40,500	40,620	40,740	40,860	40,970	41,090	41,210	15
16	42,320	42,450	42,570	42,700	42,830	42,960	43,090	43,210	43,340	43,470	43,590	43,720	43,840	43,970	44,090	44,220	44,340	44,460	44,590	44,710	44,830	16
17	46,930	47,050	47,170	47,290	47,410	47,530	47,650	47,770	47,890	48,010	48,130	48,250	48,370	48,490	48,610	48,730	48,850	48,970	49,090	49,210	49,340	17
18	51,540	51,650	51,760	51,870	51,990	52,100	52,210	52,320	52,440	52,550	52,660	52,780	52,890	53,010	53,130	53,240	53,360	53,480	53,600	53,720	53,840	18
19	56,150	56,250	56,360	56,460	56,560	56,670	56,770	56,880	56,990	57,090	57,200	57,310	57,420	57,530	57,640	57,760	57,870	57,990	58,110	58,220	58,350	19
20	59,280	59,470	59,670	59,870	60,070	60,270	60,470	60,670	60,870	61,070	61,270	61,470	61,680	61,880	62,090	62,300	62,500	62,710	62,920	63,130	63,310	20
21	62,400	62,690	62,990	63,280	63,570	63,870	64,160	64,450	64,750	65,050	65,340	65,640	65,940	66,230	66,530	66,830	67,130	67,440	67,740	68,040	68,270	21
22	65,530	65,910	66,300	66,690	67,080	67,460	67,850	68,240	68,630	69,020	69,410	69,800	70,190	70,590	70,980	71,370	71,770	72,160	72,550	72,950	73,240	22
23	65,530	65,910	66,300	66,690	67,080	67,460	67,850	68,240	68,630	69,020	69,410	69,800	70,190	70,590	70,980	71,370	71,770	72,160	72,550	72,950	73,270	23
24	65,530	65,910	66,300	66,690	67,080	67,460	67,850	68,240	68,630	69,020	69,410	69,800	70,190	70,590	70,980	71,370	71,770	72,160	72,550	72,950	73,310	24
25	65,530	65,910	66,300	66,690	67,080	67,460	67,850	68,240	68,630	69,020	69,410	69,800	70,190	70,590	70,980	71,370	71,770	72,160	72,550	72,950	73,340	25
26	65,530	65,910	66,300	66,690	67,080	67,460	67,850	68,240	68,630	69,020	69,410	69,800	70,190	70,590	70,980	71,370	71,770	72,160	72,550	72,950	73,340	26
27	65,530	65,910	66,300	66,690	67,080	67,460	67,850	68,240	68,630	69,020	69,410	69,800	70,190	70,590	70,980	71,370	71,770	72,160	72,550	72,950	73,340	27
28	65,530	65,910	66,300	66,690	67,080	67,460	67,850	68,240	68,630	69,020	69,410	69,800	70,190	70,590	70,980	71,370	71,770	72,160	72,550	72,950	73,340	28

MAY 2008

HEADWATER 800 to 804
TAILWATER 788.51 to 789.5

TELLICO DAM
SPILLWAY DISCHARGE
IN CUBIC FEET PER SECOND

HEADWATER ELEVATION

GATE ARRANGEMENT	804.0	804.1	804.2	804.3	804.4	804.5	804.6	804.7	804.8	804.9	805.0	805.1	805.2	805.3	805.4	805.5	805.6	805.7	805.8	805.9	806.0	GATE ARRANGEMENT
1	2,020	2,030	2,030	2,040	2,050	2,050	2,060	2,070	2,070	2,080	2,090	2,090	2,100	2,110	2,110	2,120	2,120	2,130	2,140	2,140	2,150	1
2	4,340	4,360	4,370	4,390	4,400	4,420	4,430	4,440	4,460	4,470	4,490	4,500	4,510	4,530	4,540	4,560	4,570	4,580	4,600	4,610	4,620	2
3	6,710	6,740	6,760	6,780	6,800	6,820	6,850	6,870	6,890	6,910	6,930	6,960	6,980	7,000	7,020	7,040	7,060	7,080	7,100	7,130	7,150	3
4	9,110	9,150	9,180	9,210	9,240	9,270	9,300	9,330	9,360	9,390	9,420	9,450	9,480	9,510	9,540	9,570	9,600	9,630	9,660	9,690	9,720	4
5	11,700	11,740	11,770	11,810	11,850	11,890	11,930	11,970	12,010	12,050	12,080	12,120	12,160	12,200	12,240	12,270	12,310	12,350	12,380	12,420	12,460	5
6	14,030	14,070	14,120	14,160	14,210	14,250	14,300	14,350	14,390	14,430	14,480	14,520	14,570	14,610	14,660	14,700	14,740	14,790	14,830	14,870	14,920	6
7	16,680	16,730	16,790	16,840	16,890	16,950	17,000	17,050	17,110	17,160	17,210	17,260	17,310	17,360	17,420	17,470	17,520	17,570	17,620	17,670	17,720	7
8	19,280	19,340	19,400	19,470	19,530	19,590	19,650	19,710	19,770	19,830	19,890	19,940	20,000	20,060	20,120	20,180	20,230	20,290	20,350	20,400	20,460	8
9	22,000	22,070	22,150	22,220	22,290	22,360	22,430	22,500	22,570	22,640	22,710	22,780	22,850	22,920	22,990	23,050	23,120	23,190	23,260	23,320	23,390	9
10	24,710	24,800	24,880	24,960	25,040	25,130	25,210	25,290	25,370	25,450	25,530	25,610	25,690	25,770	25,850	25,920	26,000	26,080	26,160	26,240	26,310	10
11	27,400	27,490	27,590	27,680	27,780	27,870	27,960	28,060	28,150	28,240	28,330	28,420	28,520	28,610	28,700	28,790	28,880	28,970	29,060	29,140	29,230	11
12	30,740	30,840	30,940	31,040	31,140	31,230	31,330	31,430	31,530	31,630	31,730	31,820	31,920	32,020	32,110	32,210	32,310	32,400	32,500	32,590	32,680	12
13	34,150	34,260	34,360	34,470	34,580	34,680	34,780	34,890	34,990	35,100	35,200	35,300	35,400	35,500	35,610	35,710	35,810	35,910	36,010	36,110	36,210	13
14	37,650	37,760	37,870	37,980	38,090	38,200	38,310	38,420	38,530	38,640	38,750	38,860	38,970	39,070	39,180	39,290	39,390	39,500	39,610	39,710	39,820	14
15	41,210	41,320	41,440	41,560	41,670	41,790	41,900	42,010	42,130	42,240	42,350	42,470	42,580	42,690	42,800	42,910	43,020	43,130	43,240	43,350	43,460	15
16	44,830	44,950	45,070	45,190	45,310	45,430	45,550	45,670	45,790	45,910	46,020	46,140	46,260	46,370	46,490	46,610	46,720	46,840	46,950	47,060	47,180	16
17	49,340	49,460	49,580	49,700	49,820	49,950	50,070	50,190	50,320	50,440	50,560	50,690	50,810	50,930	51,060	51,180	51,310	51,430	51,550	51,680	51,800	17
18	53,840	53,960	54,090	54,210	54,330	54,460	54,590	54,710	54,840	54,970	55,100	55,230	55,360	55,490	55,620	55,760	55,890	56,020	56,160	56,290	56,420	18
19	58,350	58,470	58,590	58,720	58,850	58,970	59,100	59,240	59,370	59,500	59,640	59,770	59,910	60,050	60,190	60,330	60,470	60,620	60,760	60,900	61,050	19
20	63,310	63,460	63,620	63,770	63,930	64,090	64,240	64,400	64,560	64,720	64,880	65,040	65,200	65,360	65,530	65,690	65,850	66,020	66,180	66,340	66,510	20
21	68,270	68,460	68,640	68,830	69,010	69,200	69,380	69,570	69,750	69,940	70,120	70,310	70,490	70,680	70,860	71,050	71,230	71,420	71,600	71,780	71,970	21
22	73,240	73,450	73,670	73,880	74,100	74,310	74,520	74,740	74,950	75,160	75,370	75,580	75,780	75,990	76,200	76,410	76,610	76,820	77,020	77,230	77,430	22
23	73,270	73,550	73,820	74,100	74,370	74,650	74,920	75,200	75,470	75,750	76,020	76,290	76,560	76,840	77,110	77,380	77,650	77,920	78,190	78,460	78,740	23
24	73,310	73,640	73,980	74,320	74,650	74,990	75,320	75,660	76,000	76,330	76,670	77,010	77,340	77,680	78,020	78,360	78,690	79,030	79,370	79,700	80,040	24
25	73,340	73,740	74,140	74,530	74,930	75,330	75,730	76,120	76,520	76,920	77,320	77,720	78,120	78,530	78,930	79,330	79,730	80,140	80,540	80,940	81,350	25
26	73,340	73,740	74,140	74,530	74,930	75,330	75,730	76,120	76,520	76,920	77,320	77,720	78,120	78,530	78,930	79,330	79,730	80,140	80,540	80,940	81,350	26
27	73,340	73,740	74,140	74,530	74,930	75,330	75,730	76,120	76,520	76,920	77,320	77,720	78,120	78,530	78,930	79,330	79,730	80,140	80,540	80,940	81,350	27
28	73,340	73,740	74,140	74,530	74,930	75,330	75,730	76,120	76,520	76,920	77,320	77,720	78,120	78,530	78,930	79,330	79,730	80,140	80,540	80,940	81,350	28

HEADWATER ELEVATION

GATE ARRANGEMENT	806.0	806.1	806.2	806.3	806.4	806.5	806.6	806.7	806.8	806.9	807.0	807.1	807.2	807.3	807.4	807.5	807.6	807.7	807.8	807.9	808.0	GATE ARRANGEMENT
1	2,150	2,160	2,160	2,170	2,180	2,180	2,190	2,190	2,200	2,210	2,210	2,220	2,220	2,230	2,240	2,240	2,250	2,260	2,260	2,270	2,270	1
2	4,620	4,640	4,650	4,670	4,680	4,690	4,710	4,720	4,730	4,750	4,760	4,770	4,780	4,800	4,810	4,820	4,840	4,850	4,860	4,880	4,890	2
3	7,150	7,170	7,190	7,210	7,230	7,250	7,270	7,290	7,310	7,330	7,350	7,370	7,400	7,420	7,440	7,460	7,480	7,500	7,520	7,540	7,560	3
4	9,720	9,750	9,780	9,810	9,840	9,870	9,900	9,930	9,960	9,990	10,010	10,040	10,070	10,100	10,130	10,160	10,180	10,210	10,240	10,270	10,300	4
5	12,460	12,490	12,530	12,570	12,600	12,640	12,680	12,710	12,750	12,780	12,820	12,850	12,890	12,920	12,960	13,000	13,030	13,070	13,100	13,140	13,170	5
6	14,920	14,960	15,000	15,040	15,090	15,130	15,170	15,210	15,250	15,290	15,340	15,380	15,420	15,460	15,500	15,540	15,580	15,630	15,670	15,710	15,750	6
7	17,720	17,770	17,820	17,870	17,910	17,960	18,010	18,060	18,110	18,160	18,210	18,260	18,300	18,350	18,400	18,450	18,500	18,540	18,590	18,640	18,690	7
8	20,460	20,520	20,570	20,630	20,680	20,740	20,790	20,850	20,900	20,960	21,010	21,070	21,120	21,180	21,230	21,290	21,340	21,390	21,450	21,500	21,560	8
9	23,390	23,460	23,520	23,590	23,650	23,720	23,780	23,850	23,910	23,980	24,040	24,110	24,170	24,240	24,300	24,360	24,430	24,490	24,550	24,610	24,680	9
10	26,310	26,390	26,470	26,540	26,620	26,690	26,770	26,840	26,920	26,990	27,070	27,140	27,210	27,290	27,360	27,430	27,500	27,580	27,650	27,720	27,790	10
11	29,230	29,320	29,410	29,500	29,580	29,670	29,760	29,840	29,930	30,010	30,100	30,180	30,270	30,350	30,430	30,520	30,600	30,680	30,760	30,840	30,920	11
12	32,680	32,780	32,870	32,970	33,060	33,150	33,240	33,330	33,430	33,520	33,610	33,700	33,790	33,880	33,970	34,050	34,140	34,230	34,320	34,410	34,490	12
13	36,210	36,310	36,400	36,500	36,600	36,700	36,800	36,890	36,990	37,090	37,180	37,280	37,370	37,470	37,560	37,650	37,750	37,840	37,930	38,030	38,120	13
14	39,820	39,920	40,030	40,130	40,230	40,340	40,440	40,540	40,640	40,750	40,850	40,950	41,050	41,150	41,250	41,350	41,450	41,550	41,650	41,750	41,840	14
15	43,460	43,570	43,680	43,790	43,900	44,010	44,110	44,220	44,330	44,430	44,540	44,650	44,750	44,860	44,960	45,070	45,170	45,280	45,380	45,490	45,590	15
16	47,180	47,290	47,410	47,520	47,630	47,740	47,860	47,970	48,080	48,190	48,300	48,410	48,520	48,630	48,740	48,850	48,960	49,070	49,180	49,290	49,400	16
17	51,800	51,930	52,050	52,170	52,300	52,420	52,550	52,670	52,790	52,920	53,040	53,160	53,290	53,410	53,530	53,650	53,770	53,900	54,020	54,140	54,260	17
18	56,420	56,560	56,690	56,830	56,960	57,100	57,240	57,370	57,510	57,640	57,780	57,910	58,050	58,180	58,320	58,450	58,590	58,720	58,850	58,990	59,120	18
19	61,050	61,190	61,340	61,480	61,630	61,780	61,930	62,070	62,220	62,370	62,520	62,660	62,810	62,960	63,110	63,250	63,400	63,540	63,690	63,830	63,980	19
20	66,510	66,640	66,760	66,890	67,020	67,140	67,270	67,400	67,520	67,650	67,780	67,900	68,030	68,150	68,270	68,400	68,520	68,640	68,760	68,880	69,000	20
21	71,970	72,080	72,190	72,300	72,400	72,510	72,620	72,720	72,830	72,930	73,040	73,140	73,240	73,340	73,440	73,540	73,640	73,740	73,840	73,930	74,030	21
22	77,430	77,520	77,610	77,700	77,790	77,880	77,960	78,050	78,130	78,210	78,300	78,380	78,460	78,530	78,610	78,690	78,760	78,840	78,910	78,980	79,050	22
23	78,740	78,930	79,130	79,320	79,520	79,710	79,900	80,100	80,290	80,480	80,670	80,860	81,050	81,240	81,430	81,620	81,800	81,990	82,180	82,360	82,550	23
24	80,040	80,340	80,640	80,940	81,240	81,540	81,850	82,150	82,450	82,750	83,050	83,350	83,650	83,950	84,240	84,540	84,840	85,140	85,440	85,740	86,040	24
25	81,350	81,750	82,160	82,570	82,970	83,380	83,790	84,190	84,600	85,010	85,420	85,830	86,240	86,650	87,060	87,470	87,880	88,300	88,710	89,120	89,540	25
26	81,350	81,750	82,160	82,570	82,970	83,380	83,790	84,190	84,600	85,010	85,420	85,830	86,240	86,650	87,060	87,470	87,880	88,300	88,710	89,120	89,540	26
27	81,350	81,750	82,160	82,570	82,970	83,380	83,790	84,190	84,600	85,010	85,420	85,830	86,240	86,650	87,060	87,470	87,880	88,300	88,710	89,120	89,540	27
28	81,350	81,750	82,160	82,570	82,970	83,380	83,790	84,190	84,600	85,010	85,420	85,830	86,240	86,650	87,060	87,470	87,880	88,300	88,710	89,120	89,540	28

HEADWATER 804 to 808
TAILWATER 788.51 to 789.5

MAY 2008

TELLICO DAM
SPILLWAY DISCHARGE
IN CUBIC FEET PER SECOND

HEADWATER ELEVATION

GATE ARRANGEMENT	808.0	808.1	808.2	808.3	808.4	808.5	808.6	808.7	808.8	808.9	809.0	809.1	809.2	809.3	809.4	809.5	809.6	809.7	809.8	809.9	810.0	GATE ARRANGEMENT
1	2,270	2,280	2,290	2,290	2,300	2,300	2,310	2,310	2,320	2,330	2,330	2,340	2,340	2,350	2,360	2,360	2,370	2,370	2,380	2,380	2,390	1
2	4,890	4,900	4,910	4,930	4,940	4,950	4,970	4,980	4,990	5,000	5,020	5,030	5,040	5,050	5,070	5,080	5,090	5,100	5,120	5,130	5,140	2
3	7,560	7,580	7,600	7,620	7,640	7,650	7,670	7,690	7,710	7,730	7,750	7,770	7,790	7,810	7,830	7,850	7,870	7,890	7,910	7,920	7,940	3
4	10,300	10,320	10,350	10,380	10,410	10,430	10,460	10,490	10,520	10,540	10,570	10,600	10,620	10,650	10,680	10,700	10,730	10,760	10,780	10,810	10,840	4
5	13,170	13,210	13,240	13,280	13,310	13,350	13,380	13,420	13,450	13,490	13,520	13,560	13,590	13,620	13,660	13,690	13,730	13,760	13,800	13,830	13,860	5
6	15,750	15,790	15,830	15,870	15,910	15,950	15,990	16,030	16,070	16,110	16,150	16,190	16,230	16,270	16,310	16,350	16,390	16,430	16,470	16,510	16,550	6
7	18,690	18,740	18,780	18,830	18,880	18,930	18,970	19,020	19,070	19,120	19,160	19,210	19,260	19,310	19,360	19,400	19,450	19,500	19,540	19,590	19,640	7
8	21,560	21,610	21,670	21,720	21,780	21,830	21,880	21,940	21,990	22,050	22,100	22,160	22,210	22,270	22,320	22,370	22,430	22,480	22,540	22,590	22,650	8
9	24,680	24,740	24,800	24,860	24,930	24,990	25,050	25,110	25,170	25,240	25,300	25,360	25,420	25,480	25,540	25,600	25,660	25,720	25,780	25,840	25,900	9
10	27,790	27,860	27,930	28,000	28,070	28,140	28,210	28,280	28,350	28,420	28,490	28,560	28,630	28,700	28,760	28,830	28,900	28,970	29,030	29,100	29,170	10
11	30,920	31,000	31,080	31,160	31,240	31,320	31,390	31,470	31,550	31,620	31,700	31,780	31,850	31,930	32,000	32,080	32,150	32,220	32,300	32,370	32,440	11
12	34,490	34,580	34,660	34,750	34,830	34,920	35,000	35,090	35,170	35,250	35,340	35,420	35,500	35,580	35,670	35,750	35,830	35,910	35,990	36,070	36,150	12
13	38,120	38,210	38,300	38,390	38,480	38,580	38,670	38,760	38,850	38,930	39,020	39,110	39,200	39,290	39,380	39,470	39,550	39,640	39,730	39,810	39,900	13
14	41,840	41,940	42,040	42,140	42,230	42,330	42,420	42,520	42,620	42,710	42,810	42,900	42,990	43,090	43,180	43,270	43,370	43,460	43,550	43,650	43,740	14
15	45,590	45,690	45,800	45,900	46,000	46,110	46,210	46,310	46,410	46,520	46,620	46,720	46,820	46,920	47,020	47,120	47,230	47,330	47,430	47,530	47,630	15
16	49,400	49,510	49,620	49,730	49,840	49,940	50,050	50,160	50,270	50,380	50,480	50,590	50,700	50,810	50,910	51,020	51,130	51,240	51,340	51,450	51,560	16
17	54,260	54,380	54,500	54,620	54,740	54,860	54,980	55,100	55,210	55,330	55,450	55,570	55,680	55,800	55,920	56,030	56,150	56,270	56,380	56,500	56,610	17
18	59,120	59,250	59,380	59,510	59,640	59,770	59,900	60,030	60,160	60,290	60,410	60,540	60,670	60,790	60,920	61,050	61,170	61,300	61,420	61,550	61,670	18
19	63,980	64,120	64,260	64,410	64,550	64,690	64,830	64,970	65,110	65,240	65,380	65,520	65,650	65,790	65,920	66,060	66,190	66,330	66,460	66,590	66,730	19
20	69,000	69,150	69,290	69,430	69,570	69,710	69,840	69,980	70,120	70,260	70,390	70,530	70,660	70,800	70,930	71,060	71,200	71,330	71,460	71,590	71,720	20
21	74,030	74,170	74,310	74,450	74,590	74,720	74,860	75,000	75,130	75,270	75,400	75,540	75,670	75,800	75,940	76,070	76,200	76,330	76,460	76,590	76,720	21
22	79,050	79,190	79,330	79,470	79,610	79,740	79,880	80,010	80,150	80,280	80,420	80,550	80,680	80,810	80,940	81,070	81,200	81,330	81,460	81,590	81,710	22
23	82,550	82,780	83,010	83,240	83,470	83,700	83,930	84,160	84,390	84,610	84,840	85,070	85,300	85,530	85,750	85,980	86,210	86,430	86,660	86,880	87,110	23
24	86,040	86,360	86,690	87,010	87,330	87,650	87,980	88,300	88,620	88,950	89,270	89,590	89,920	90,240	90,560	90,890	91,210	91,530	91,860	92,180	92,500	24
25	89,540	89,950	90,360	90,780	91,190	91,610	92,030	92,440	92,860	93,280	93,700	94,110	94,530	94,950	95,370	95,790	96,210	96,630	97,050	97,480	97,900	25
26	89,540	89,950	90,360	90,780	91,190	91,610	92,030	92,440	92,860	93,280	93,700	94,110	94,530	94,950	95,370	95,790	96,210	96,630	97,050	97,480	97,900	26
27	89,540	89,950	90,360	90,780	91,190	91,610	92,030	92,440	92,860	93,280	93,700	94,110	94,530	94,950	95,370	95,790	96,210	96,630	97,050	97,480	97,900	27
28	89,540	89,950	90,360	90,780	91,190	91,610	92,030	92,440	92,860	93,280	93,700	94,110	94,530	94,950	95,370	95,790	96,210	96,630	97,050	97,480	97,900	28

HEADWATER ELEVATION

GATE ARRANGEMENT	810.0	810.1	810.2	810.3	810.4	810.5	810.6	810.7	810.8	810.9	811.0	811.1	811.2	811.3	811.4	811.5	811.6	811.7	811.8	811.9	812.0	GATE ARRANGEMENT
1	2,390	2,400	2,400	2,410	2,410	2,420	2,420	2,430	2,430	2,440	2,450	2,450	2,460	2,460	2,470	2,470	2,480	2,480	2,490	2,500	2,500	1
2	5,140	5,150	5,160	5,180	5,190	5,200	5,210	5,220	5,240	5,250	5,260	5,270	5,280	5,300	5,310	5,320	5,330	5,340	5,360	5,370	5,380	2
3	7,940	7,960	7,980	8,000	8,020	8,040	8,060	8,070	8,090	8,110	8,130	8,150	8,170	8,190	8,200	8,220	8,240	8,260	8,280	8,300	8,310	3
4	10,840	10,860	10,890	10,910	10,940	10,970	10,990	11,020	11,040	11,070	11,090	11,120	11,140	11,170	11,190	11,220	11,240	11,270	11,290	11,320	11,340	4
5	13,860	13,900	13,930	13,970	14,000	14,030	14,070	14,100	14,130	14,170	14,200	14,230	14,270	14,300	14,330	14,360	14,400	14,430	14,460	14,490	14,530	5
6	16,550	16,590	16,630	16,670	16,710	16,750	16,790	16,830	16,870	16,910	16,950	16,990	17,030	17,070	17,110	17,150	17,180	17,220	17,260	17,300	17,340	6
7	19,640	19,690	19,730	19,780	19,830	19,870	19,920	19,970	20,020	20,060	20,110	20,160	20,200	20,250	20,300	20,340	20,390	20,440	20,480	20,530	20,570	7
8	22,650	22,700	22,750	22,810	22,860	22,920	22,970	23,020	23,080	23,130	23,180	23,240	23,290	23,340	23,400	23,450	23,500	23,560	23,610	23,660	23,710	8
9	25,900	25,970	26,030	26,090	26,150	26,210	26,260	26,320	26,380	26,440	26,500	26,560	26,620	26,680	26,740	26,800	26,860	26,920	26,980	27,030	27,090	9
10	29,170	29,240	29,300	29,370	29,440	29,500	29,570	29,630	29,700	29,770	29,830	29,900	29,960	30,030	30,090	30,160	30,220	30,290	30,350	30,420	30,480	10
11	32,440	32,520	32,590	32,660	32,730	32,810	32,880	32,950	33,020	33,090	33,160	33,230	33,300	33,380	33,450	33,520	33,590	33,660	33,730	33,800	33,870	11
12	36,150	36,230	36,310	36,390	36,470	36,550	36,630	36,700	36,780	36,860	36,940	37,020	37,100	37,170	37,250	37,330	37,410	37,490	37,560	37,640	37,720	12
13	39,900	39,990	40,070	40,160	40,250	40,330	40,420	40,500	40,590	40,680	40,760	40,850	40,930	41,020	41,100	41,190	41,270	41,360	41,440	41,520	41,610	13
14	43,740	43,830	43,920	44,010	44,110	44,200	44,290	44,380	44,470	44,560	44,650	44,740	44,830	44,930	45,020	45,110	45,200	45,290	45,380	45,470	45,560	14
15	47,630	47,730	47,830	47,930	48,030	48,130	48,230	48,320	48,420	48,520	48,620	48,720	48,820	48,920	49,020	49,120	49,210	49,310	49,410	49,510	49,610	15
16	51,560	51,660	51,770	51,870	51,980	52,090	52,190	52,300	52,400	52,510	52,620	52,720	52,830	52,930	53,040	53,140	53,250	53,350	53,460	53,560	53,670	16
17	56,610	56,730	56,840	56,960	57,070	57,190	57,300	57,410	57,530	57,640	57,760	57,870	57,980	58,100	58,210	58,320	58,440	58,550	58,670	58,780	58,890	17
18	61,670	61,790	61,920	62,040	62,160	62,290	62,410	62,530	62,650	62,780	62,900	63,020	63,140	63,260	63,390	63,510	63,630	63,750	63,870	63,990	64,120	18
19	66,730	66,860	66,990	67,120	67,250	67,390	67,520	67,650	67,780	67,910	68,040	68,170	68,300	68,430	68,560	68,690	68,820	68,950	69,080	69,210	69,340	19
20	71,720	71,850	71,980	72,110	72,240	72,370	72,500	72,630	72,750	72,880	73,010	73,140	73,260	73,390	73,510	73,640	73,770	73,890	74,020	74,140	74,270	20
21	76,720	76,850	76,970	77,100	77,230	77,350	77,480	77,600	77,730	77,850	77,980	78,100	78,220	78,350	78,470	78,590	78,710	78,830	78,960	79,080	79,200	21
22	81,710	81,840	81,960	82,090	82,210	82,340	82,460	82,580	82,710	82,830	82,950	83,070	83,190	83,310	83,420	83,540	83,660	83,780	83,890	84,010	84,120	22
23	87,110	87,330	87,560	87,780	87,980	88,140	88,300	88,460	88,620	88,790	88,950	89,110	89,260	89,420	89,580	89,740	89,890	90,050	90,210	90,360	90,510	23
24	92,500	92,830	93,150	93,480	93,740	93,940	94,140	94,340	94,540	94,740	94,940	95,140	95,340	95,540	95,740	95,930	96,130	96,320	96,520	96,710	96,910	24
25	97,900	98,320	98,740	99,170	99,500	99,740	99,980	100,200	100,500	100,700	100,900	101,200	101,400	101,700	101,900	102,100	102,400	102,600	102,800	103,100	103,300	25
26	97,900	98,320	98,740	99,170	99,530	99,830	100,100	100,400	100,700	101,000	101,300	101,600	101,900	102,200	102,500	102,800	103,100	103,400	103,700	104,000	104,300	26
27	97,900	98,320	98,740	99,170	99,560	99,920	100,300	100,700	101,000	101,400	101,700	102,100	102,500	102,800	103,200	103,600	103,900	104,300	104,700	105,000	105,400	27
28	97,900	98,320	98,740	99,170	99,590	100,000	100,400	100,900	101,300	101,700	102,100	102,600	103,000	103,400	103,900	104,300	104,700	105,100	105,600	106,000	106,400	28

MAY 2008

HEADWATER 808 to 812
TAILWATER 788.51 to 789.5

TELLICO DAM
SPILLWAY DISCHARGE
IN CUBIC FEET PER SECOND

GATE ARRANGEMENT	HEADWATER ELEVATION																				GATE ARRANGEMENT
	812.0	812.1	812.2	812.3	812.4	812.5	812.6	812.7	812.8	812.9	813.0	813.1	813.2	813.3	813.4	813.5	813.6	813.7	813.8	813.9	814.0	
1	2,500	2,510	2,510	2,520	2,520	2,530	2,530	2,540	2,540	2,550	2,550	2,560	2,570	2,570	2,580	2,580	2,590	2,590	2,600	2,600	2,610	1
2	5,380	5,390	5,400	5,410	5,430	5,440	5,450	5,460	5,470	5,480	5,490	5,510	5,520	5,530	5,540	5,550	5,560	5,570	5,590	5,600	5,610	2
3	8,310	8,330	8,350	8,370	8,390	8,400	8,420	8,440	8,460	8,470	8,490	8,510	8,530	8,540	8,560	8,580	8,600	8,620	8,630	8,650	8,670	3
4	11,340	11,370	11,390	11,420	11,440	11,470	11,490	11,520	11,540	11,560	11,590	11,610	11,640	11,660	11,680	11,710	11,730	11,760	11,780	11,800	11,830	4
5	14,530	14,560	14,590	14,620	14,650	14,680	14,710	14,750	14,780	14,810	14,840	14,870	14,900	14,930	14,960	14,990	15,020	15,050	15,080	15,110	15,140	5
6	17,340	17,380	17,420	17,460	17,500	17,540	17,580	17,620	17,660	17,700	17,730	17,770	17,810	17,850	17,890	17,930	17,970	18,010	18,050	18,090	18,120	6
7	20,570	20,620	20,670	20,710	20,760	20,810	20,850	20,900	20,940	20,990	21,030	21,080	21,130	21,170	21,220	21,260	21,310	21,350	21,400	21,440	21,490	7
8	23,710	23,770	23,820	23,870	23,920	23,970	24,030	24,080	24,130	24,180	24,230	24,280	24,330	24,380	24,440	24,490	24,540	24,590	24,640	24,690	24,740	8
9	27,090	27,150	27,210	27,270	27,330	27,390	27,440	27,500	27,560	27,620	27,680	27,730	27,790	27,850	27,910	27,970	28,020	28,080	28,140	28,200	28,250	9
10	30,480	30,550	30,610	30,680	30,740	30,810	30,870	30,940	31,000	31,070	31,130	31,200	31,260	31,330	31,390	31,450	31,520	31,580	31,650	31,710	31,780	10
11	33,870	33,940	34,010	34,080	34,150	34,220	34,290	34,370	34,440	34,510	34,580	34,650	34,720	34,790	34,860	34,930	35,000	35,070	35,140	35,210	35,290	11
12	37,720	37,800	37,870	37,950	38,030	38,110	38,180	38,260	38,340	38,420	38,490	38,570	38,650	38,720	38,800	38,880	38,960	39,030	39,110	39,190	39,260	12
13	41,610	41,690	41,780	41,860	41,950	42,030	42,120	42,200	42,290	42,370	42,450	42,540	42,620	42,710	42,790	42,870	42,960	43,040	43,130	43,210	43,290	13
14	45,560	45,650	45,740	45,830	45,920	46,010	46,100	46,190	46,280	46,380	46,470	46,560	46,650	46,740	46,830	46,920	47,010	47,100	47,190	47,280	47,370	14
15	49,610	49,710	49,800	49,900	50,000	50,100	50,200	50,290	50,390	50,490	50,590	50,680	50,780	50,880	50,970	51,070	51,170	51,260	51,360	51,450	51,550	15
16	53,670	53,770	53,880	53,980	54,090	54,190	54,290	54,400	54,500	54,610	54,710	54,810	54,920	55,020	55,120	55,220	55,330	55,430	55,530	55,630	55,730	16
17	58,890	59,010	59,120	59,230	59,350	59,460	59,570	59,680	59,800	59,910	60,020	60,140	60,250	60,360	60,470	60,580	60,690	60,800	60,920	61,030	61,140	17
18	64,120	64,240	64,360	64,480	64,610	64,730	64,850	64,970	65,090	65,220	65,340	65,460	65,580	65,700	65,820	65,940	66,060	66,180	66,300	66,420	66,540	18
19	69,340	69,470	69,600	69,730	69,860	70,000	70,130	70,260	70,390	70,520	70,650	70,780	70,910	71,040	71,170	71,300	71,430	71,560	71,690	71,820	71,950	19
20	74,270	74,410	74,540	74,680	74,820	74,960	75,090	75,230	75,370	75,500	75,640	75,780	75,910	76,050	76,180	76,320	76,450	76,590	76,720	76,860	76,990	20
21	79,200	79,340	79,480	79,630	79,770	79,920	80,060	80,200	80,340	80,490	80,630	80,770	80,910	81,050	81,190	81,330	81,470	81,610	81,750	81,890	82,030	21
22	84,120	84,270	84,430	84,580	84,730	84,880	85,020	85,170	85,320	85,470	85,620	85,770	85,910	86,060	86,210	86,350	86,500	86,640	86,790	86,930	87,070	22
23	90,510	90,640	90,770	90,890	91,010	91,140	91,260	91,380	91,500	91,620	91,740	91,860	91,980	92,100	92,220	92,330	92,450	92,560	92,680	92,790	92,910	23
24	96,910	97,010	97,110	97,200	97,300	97,400	97,500	97,590	97,680	97,780	97,870	97,960	98,050	98,140	98,230	98,310	98,400	98,490	98,570	98,650	98,740	24
25	103,300	103,400	103,400	103,500	103,600	103,700	103,700	103,800	103,900	103,900	104,000	104,100	104,100	104,200	104,200	104,300	104,400	104,400	104,500	104,500	104,600	25
26	104,300	104,500	104,700	104,900	105,100	105,300	105,500	105,700	105,900	106,100	106,200	106,400	106,600	106,800	107,000	107,200	107,400	107,500	107,700	107,900	108,100	26
27	105,400	105,700	106,000	106,300	106,600	106,900	107,300	107,600	107,900	108,200	108,500	108,800	109,100	109,400	109,700	110,100	110,400	110,700	111,000	111,300	111,600	27
28	106,400	106,900	107,300	107,700	108,200	108,600	109,000	109,500	109,900	110,300	110,800	111,200	111,600	112,100	112,500	112,900	113,400	113,800	114,300	114,700	115,100	28

GATE ARRANGEMENT	HEADWATER ELEVATION																				GATE ARRANGEMENT
	814.0	814.1	814.2	814.3	814.4	814.5	814.6	814.7	814.8	814.9	815.0	815.1	815.2	815.3	815.4	815.5	815.6	815.7	815.8	815.9	816.0	
1	2,610	2,610	2,620	2,620	2,630	2,630	2,640	2,640	2,650	2,650	2,660	2,660	2,670	2,670	2,680	2,680						1
2	5,610	5,620	5,630	5,640	5,650	5,660	5,670	5,690	5,700	5,710	5,720	5,730	5,740	5,750	5,760	5,770	5,780	5,800	5,810	5,820	5,830	2
3	8,670	8,680	8,700	8,720	8,740	8,750	8,770	8,790	8,800	8,820	8,840	8,860	8,870	8,890	8,910	8,920	8,940	8,960	8,970	8,990	9,010	3
4	11,830	11,850	11,870	11,900	11,920	11,940	11,970	11,990	12,010	12,040	12,060	12,080	12,110	12,130	12,150	12,170	12,200	12,220	12,240	12,270	12,290	4
5	15,140	15,170	15,200	15,230	15,260	15,290	15,320	15,350	15,380	15,410	15,440	15,470	15,500	15,530	15,560	15,590	15,620	15,650	15,680	15,710	15,740	5
6	18,120	18,160	18,200	18,240	18,280	18,320	18,360	18,400	18,440	18,470	18,510	18,550	18,590	18,630	18,670	18,710	18,740	18,780	18,820	18,860	18,900	6
7	21,490	21,530	21,580	21,620	21,670	21,710	21,760	21,800	21,840	21,890	21,930	21,980	22,020	22,070	22,110	22,150	22,200	22,240	22,280	22,330	22,370	7
8	24,740	24,790	24,840	24,890	24,940	24,990	25,040	25,090	25,140	25,190	25,240	25,290	25,340	25,380	25,430	25,480	25,530	25,580	25,630	25,680	25,730	8
9	28,250	28,310	28,370	28,430	28,480	28,540	28,600	28,660	28,710	28,770	28,830	28,880	28,940	29,000	29,050	29,110	29,170	29,220	29,280	29,340	29,390	9
10	31,780	31,840	31,900	31,970	32,030	32,100	32,160	32,220	32,290	32,350	32,420	32,480	32,540	32,610	32,670	32,730	32,800	32,860	32,920	32,990	33,050	10
11	35,290	35,360	35,430	35,500	35,570	35,640	35,710	35,780	35,850	35,920	35,990	36,060	36,130	36,210	36,280	36,350	36,420	36,490	36,560	36,630	36,700	11
12	39,260	39,340	39,420	39,490	39,570	39,650	39,720	39,800	39,880	39,950	40,030	40,110	40,180	40,260	40,330	40,410	40,490	40,560	40,640	40,710	40,790	12
13	43,290	43,380	43,460	43,540	43,620	43,710	43,790	43,870	43,950	44,040	44,120	44,200	44,280	44,360	44,440	44,520	44,600	44,690	44,770	44,840	44,920	13
14	47,370	47,450	47,540	47,630	47,720	47,810	47,900	47,990	48,070	48,160	48,250	48,340	48,420	48,510	48,590	48,680	48,770	48,850	48,940	49,020	49,100	14
15	51,550	51,650	51,740	51,830	51,930	52,020	52,120	52,210	52,300	52,390	52,490	52,580	52,670	52,760	52,850	52,940	53,030	53,120	53,200	53,290	53,380	15
16	55,730	55,830	55,930	56,030	56,130	56,230	56,330	56,420	56,520	56,620	56,710	56,810	56,900	57,000	57,090	57,190	57,280	57,370	57,460	57,550	57,640	16
17	61,140	61,240	61,350	61,460	61,570	61,680	61,780	61,890	62,000	62,100	62,210	62,310	62,420	62,520	62,620	62,720	62,820	62,920	63,020	63,120	63,220	17
18	66,540	66,660	66,780	66,890	67,010	67,130	67,240	67,360	67,470	67,590	67,700	67,810	67,930	68,040	68,150	68,260	68,370	68,470	68,580	68,690	68,790	18
19	71,950	72,070	72,200	72,330	72,450	72,580	72,700	72,830	72,950	73,070	73,200	73,320	73,440	73,560	73,680	73,790	73,910	74,030	74,140	74,250	74,370	19
20	76,990	77,120	77,250	77,390	77,520	77,650	77,780	77,910	78,040	78,170	78,300	78,420	78,550	78,680	78,800	78,930	79,050	79,170	79,300	79,420	79,540	20
21	82,030	82,170	82,310	82,450	82,580	82,720	82,850	82,990	83,130	83,260	83,400	83,530	83,660	83,790	83,930	84,060	84,190	84,320	84,450	84,580	84,710	21
22	87,070	87,220	87,360	87,500	87,650	87,790	87,930	88,070	88,210	88,350	88,490	88,630	88,770	88,910	89,050	89,190	89,330	89,470	89,610	89,740	89,880	22
23	92,910	93,040	93,170	93,300	93,430	93,550	93,680	93,810	93,940	94,060	94,190	94,310	94,440	94,560	94,690	94,810	94,930	95,060	95,180	95,300	95,420	23
24	98,740	98,860	98,970	99,090	99,200	99,320	99,430	99,550	99,660	99,770	99,880	99,990	100,100	100,200	100,300	100,400	100,500	100,600	100,800	100,900	101,000	24
25	104,600	104,700	104,800	104,900	105,000	105,100	105,200	105,300	105,400	105,500	105,600	105,700	105,800	105,900	106,000	106,000	106,100	106,200	106,300	106,400	106,500	25
26	108,100	108,300	108,500	108,700	109,000	109,200	109,400	109,600	109,800	110,000	110,600	110,700	110,800	110,800	110,900	111,000	111,000	111,100	111,200	111,200	111,300	26
27	111,600	111,900	112,300	112,600	112,900	113,200	113,600	113,900	114,200	114,600	115,700	115,800	115,800	115,800	115,900	115,900	115,900	116,000	116,000	116,000	116,100	27
28	115,100	115,600	116,000	116,400	116,900	117,300	117,800	118,200	118,700	119,100	120,800	120,800	120,800	120,800	120,800	120,800	120,800	120,800	120,800	120,800	120,800	28

HEADWATER 812 to 816
TAILWATER 788.51 to 789.5

See special instruction for preventing gate overflow on page 2.

MAY 2008

TELLICO DAM
SPILLWAY DISCHARGE
IN CUBIC FEET PER SECOND

HEADWATER ELEVATION

GATE ARRANGEMENT	816.0	816.1	816.2	816.3	816.4	816.5	816.6	816.7	816.8	816.9	817.0	817.1	817.2	817.3	817.4	817.5	817.6	817.7	817.8	817.9	818.0	GATE ARRANGEMENT
1																						1
2	5,830	5,840	5,850																			2
3	9,010	9,020	9,040	9,060	9,070	9,090	9,110	9,120	9,140	9,160	9,170											3
4	12,290	12,310	12,330	12,360	12,380	12,400	12,420	12,450	12,470	12,490	12,510	12,720	13,080	13,550	14,100	14,720	15,410	16,170				4
5	15,740	15,770	15,800	15,830	15,860	15,890	15,920	15,950	15,990	16,020	16,050	16,260	16,630	17,100	17,660	18,300	19,000	19,760	20,590	21,470	22,400	5
6	18,900	18,940	18,970	19,010	19,050	19,090	19,130	19,170	19,200	19,240	19,280	19,500	19,880	20,360	20,920	21,560	22,270	23,040	23,870	24,760	25,700	6
7	22,370	22,410	22,460	22,500	22,540	22,590	22,630	22,670	22,720	22,760	22,800	23,030	23,410	23,900	24,470	25,110	25,820	26,600	27,430	28,330	29,270	7
8	25,730	25,780	25,830	25,870	25,920	25,970	26,020	26,070	26,120	26,170	26,220	26,450	26,840	27,330	27,900	28,550	29,270	30,050	30,900	31,790	32,750	8
9	29,390	29,450	29,510	29,560	29,620	29,670	29,730	29,790	29,840	29,900	29,960	30,200	30,590	31,090	31,670	32,330	33,060	33,850	34,690	35,600	36,560	9
10	33,050	33,120	33,180	33,240	33,310	33,370	33,430	33,500	33,560	33,620	33,690	33,930	34,340	34,840	35,430	36,100	36,830	37,630	38,480	39,390	40,360	10
11	36,700	36,770	36,840	36,910	36,980	37,050	37,130	37,200	37,270	37,340	37,410	37,660	38,070	38,590	39,180	39,860	40,600	41,400	42,260	43,180	44,160	11
12	40,790	40,860	40,940	41,010	41,090	41,160	41,240	41,310	41,390	41,460	41,540	41,800	42,210	42,730	43,330	44,000	44,750	45,560	46,420	47,350	48,320	12
13	44,920	45,000	45,080	45,160	45,240	45,320	45,400	45,470	45,550	45,630	45,710	45,970	46,380	46,900	47,510	48,190	48,930	49,740	50,610	51,530	52,510	13
14	49,100	49,190	49,270	49,350	49,440	49,520	49,600	49,680	49,760	49,840	49,920	50,190	50,610	51,130	51,740	52,420	53,170	53,980	54,850	55,780	56,760	14
15	53,380	53,470	53,550	53,640	53,720	53,810	53,890	53,980	54,060	54,140	54,220	54,490	54,910	55,430	56,040	56,720	57,470	58,290	59,160	60,090	61,070	15
16	57,640	57,730	57,820	57,910	58,000	58,090	58,170	58,260	58,340	58,430	58,510	58,780	59,200	59,720	60,330	61,020	61,770	62,580	63,450	64,380	65,360	16
17	63,220	63,310	63,410	63,510	63,600	63,690	63,790	63,880	63,970	64,060	64,150	64,420	64,850	65,380	66,000	66,680	67,440	68,260	69,140	70,070	71,060	17
18	68,790	68,900	69,000	69,100	69,200	69,300	69,400	69,500	69,600	69,690	69,790	70,070	70,500	71,040	71,660	72,350	73,110	73,940	74,820	75,760	76,750	18
19	74,370	74,480	74,590	74,700	74,800	74,910	75,020	75,120	75,230	75,330	75,430	75,720	76,150	76,700	77,320	78,020	78,790	79,620	80,500	81,450	82,440	19
20	79,540	79,660	79,780	79,910	80,030	80,150	80,270	80,390	80,500	80,620	80,740	81,040	81,490	82,050	82,690	83,410	84,190	85,030	85,940	86,900	87,910	20
21	84,710	84,850	84,980	85,120	85,250	85,380	85,520	85,650	85,780	85,910	86,050	86,360	86,830	87,400	88,060	88,790	89,590	90,450	91,370	92,350	93,380	21
22	89,880	90,030	90,180	90,330	90,470	90,620	90,770	90,920	91,060	91,210	91,350	91,680	92,170	92,760	93,430	94,180	94,990	95,870	96,810	97,800	98,840	22
23	95,420	95,560	95,700	95,850	95,990	96,130	96,270	96,410	96,550	96,690	96,820	97,150	97,620	98,200	98,870	99,610	100,400	101,300	102,200	103,200	104,200	23
24	101,000	101,100	101,200	101,400	101,500	101,600	101,800	101,900	102,000	102,200	102,300	102,600	103,100	103,700	104,300	105,000	105,800	106,700	107,600	108,600	109,600	24
25	106,500	106,600	106,800	106,900	107,000	107,100	107,300	107,400	107,500	107,600	107,800	108,100	108,500	109,100	109,700	110,500	111,300	112,100	113,000	114,000	115,000	25
26	111,300	111,400	111,500	111,500	111,600	111,700	111,800	111,900	112,000	112,100	112,200	112,400	112,900	113,400	114,000	114,700	115,400	116,300	117,100	118,100	119,000	26
27	116,100	116,100	116,200	116,200	116,300	116,300	116,400	116,400	116,400	116,500	116,500	116,800	117,200	117,700	118,200	118,900	119,600	120,400	121,200	122,100	123,100	27
28	120,800	120,800	120,900	120,900	120,900	120,900	120,900	120,900	120,900	120,900	120,900	121,100	121,500	121,900	122,500	123,100	123,800	124,500	125,300	126,200	127,100	28

HEADWATER ELEVATION

GATE ARRANGEMENT	818.0	818.1	818.2	818.3	818.4	818.5	818.6	818.7	818.8	818.9	819.0	819.1	819.2	819.3	819.4	819.5	819.6	819.7	819.8	819.9	820.0	GATE ARRANGEMENT
1																						1
2																						2
3																						3
4																						4
5	22,400	23,390	24,420	25,510	26,640																	5
6	25,700	26,690	27,740	28,830	29,970	31,150	32,380	33,660	34,980	36,340	37,740	39,180										6
7	29,270	30,270	31,320	32,410	33,560	34,750	35,980	37,260	38,580	39,950	41,350	42,800	44,290	45,820	47,390	48,990	50,640	52,320	54,040			7
8	32,750	33,750	34,800	35,900	37,050	38,250	39,490	40,780	42,110	43,480	44,890	46,340	47,840	49,370	50,950	52,560	54,210	55,900	57,630	59,400	61,200	8
9	36,560	37,570	38,630	39,740	40,900	42,100	43,350	44,640	45,980	47,350	48,770	50,240	51,740	53,280	54,860	56,480	58,140	59,840	61,570	63,350	65,150	9
10	40,360	41,380	42,450	43,560	44,730	45,940	47,190	48,490	49,840	51,220	52,650	54,120	55,630	57,180	58,770	60,400	62,060	63,770	65,510	67,290	69,110	10
11	44,160	45,180	46,260	47,380	48,550	49,770	51,040	52,340	53,690	55,090	56,520	58,000	59,520	61,070	62,670	64,310	65,980	67,690	69,440	71,230	73,050	11
12	48,320	49,350	50,430	51,560	52,730	53,950	55,220	56,530	57,880	59,280	60,720	62,200	63,720	65,280	66,880	68,520	70,190	71,910	73,660	75,450	77,280	12
13	52,510	53,540	54,620	55,750	56,930	58,150	59,420	60,730	62,080	63,480	64,920	66,400	67,920	69,480	71,080	72,720	74,400	76,110	77,870	79,660	81,480	13
14	56,760	57,790	58,870	60,000	61,180	62,400	63,670	64,990	66,340	67,740	69,180	70,670	72,190	73,750	75,350	76,990	78,670	80,390	82,140	83,930	85,760	14
15	61,070	62,100	63,180	64,320	65,490	66,720	67,990	69,300	70,660	72,060	73,500	74,980	76,500	78,060	79,660	81,300	82,980	84,700	86,450	88,240	90,070	15
16	65,360	66,400	67,480	68,610	69,790	71,020	72,280	73,600	74,950	76,350	77,790	79,270	80,800	82,360	83,960	85,600	87,270	88,990	90,740	92,530	94,360	16
17	71,060	72,100	73,180	74,320	75,500	76,730	78,010	79,320	80,680	82,090	83,530	85,020	86,540	88,110	89,710	91,350	93,040	94,750	96,510	98,300	100,100	17
18	76,750	77,790	78,890	80,030	81,220	82,450	83,730	85,050	86,410	87,820	89,270	90,760	92,290	93,860	95,460	97,110	98,800	100,500	102,300	104,100	105,900	18
19	82,440	83,490	84,590	85,740	86,930	88,170	89,450	90,770	92,140	93,550	95,010	96,500	98,030	99,610	101,200	102,900	104,600	106,300	108,000	109,800	111,700	19
20	87,910	88,980	90,090	91,250	92,460	93,720	95,020	96,360	97,750	99,180	100,600	102,200	103,700	105,300	106,900	108,600	110,300	112,100	113,800	115,700	117,500	20
21	93,380	94,460	95,590	96,770	98,000	99,270	100,600	101,900	103,400	104,800	106,300	107,800	109,400	111,000	112,600	114,300	116,100	117,800	119,600	121,500	123,300	21
22	98,840	99,940	101,100	102,300	103,500	104,800	106,200	107,500	109,000	110,400	111,900	113,500	115,100	116,700	118,400	120,100	121,800	123,600	125,400	127,300	129,200	22
23	104,200	105,300	106,500	107,700	109,000	110,300	111,600	113,000	114,400	115,900	117,400	119,000	120,500	122,200	123,900	125,600	127,300	129,100	130,900	132,800	134,700	23
24	109,600	110,700	111,900	113,100	114,400	115,700	117,000	118,400	119,900	121,300	122,900	124,400	126,000	127,700	129,400	131,100	132,800	134,600	136,500	138,300	140,200	24
25	115,000	116,100	117,300	118,500	119,800	121,100	122,500	123,900	125,300	126,800	128,300	129,900	131,500	133,200	134,900	136,600	138,300	140,100	142,000	143,900	145,800	25
26	119,000	120,200	121,400	122,600	123,900	125,200	126,600	128,000	129,500	131,000	132,500	134,100	135,700	137,400	139,100	140,800	142,600	144,400	146,300	148,200	150,100	26
27	123,100	124,200	125,400	126,700	128,000	129,300	130,700	132,100	133,600	135,100	136,700	138,300	139,900	141,600	143,300	145,100	146,900	148,700	150,600	152,500	154,400	27
28	127,100	128,300	129,500	130,800	132,100	133,400	134,800	136,300	137,800	139,300	140,900	142,500	144,100	145,800	147,500	149,300	151,100	153,000	154,800	156,800	158,700	28

MAY 2008

See special instruction for preventing gate overflow on page 2.

HEADWATER 816 to 820
TAILWATER 788.51 to 789.5

TELLICO DAM
SPILLWAY DISCHARGE
IN CUBIC FEET PER SECOND

GATE ARRANGEMENT	HEADWATER ELEVATION																				GATE ARRANGEMENT
	800.0	800.1	800.2	800.3	800.4	800.5	800.6	800.7	800.8	800.9	801.0	801.1	801.2	801.3	801.4	801.5	801.6	801.7	801.8	801.9	802.0	
1	1,650	1,660	1,670	1,670	1,680	1,690	1,700	1,710	1,710	1,720	1,730	1,740	1,750	1,750	1,760	1,770	1,780	1,780	1,790	1,800	1,810	1
2	3,550	3,560	3,580	3,600	3,620	3,630	3,650	3,670	3,690	3,700	3,720	3,740	3,750	3,770	3,790	3,800	3,820	3,840	3,850	3,870	3,890	2
3	5,480	5,500	5,530	5,560	5,590	5,610	5,640	5,670	5,690	5,720	5,740	5,770	5,800	5,820	5,850	5,870	5,900	5,920	5,950	5,970	6,000	3
4	7,410	7,450	7,490	7,520	7,560	7,600	7,630	7,670	7,700	7,740	7,780	7,810	7,850	7,880	7,920	7,950	7,990	8,030	8,060	8,100	8,130	4
5	9,540	9,580	9,630	9,670	9,720	9,760	9,800	9,850	9,890	9,940	9,980	10,020	10,070	10,110	10,160	10,200	10,240	10,290	10,330	10,380	10,420	5
6	11,490	11,540	11,590	11,640	11,700	11,750	11,800	11,850	11,900	11,950	12,010	12,060	12,110	12,160	12,210	12,260	12,310	12,370	12,420	12,470	12,520	6
7	13,620	13,680	13,750	13,810	13,870	13,930	14,000	14,060	14,120	14,190	14,250	14,310	14,370	14,440	14,500	14,560	14,630	14,690	14,750	14,810	14,880	7
8	15,690	15,760	15,840	15,910	15,980	16,060	16,130	16,210	16,280	16,360	16,430	16,510	16,580	16,660	16,730	16,810	16,880	16,960	17,030	17,100	17,180	8
9	17,900	17,990	18,070	18,150	18,240	18,320	18,400	18,490	18,570	18,660	18,740	18,820	18,910	18,990	19,080	19,160	19,240	19,330	19,410	19,490	19,580	9
10	20,100	20,190	20,280	20,370	20,470	20,560	20,650	20,750	20,840	20,930	21,030	21,120	21,210	21,310	21,400	21,490	21,590	21,680	21,770	21,870	21,960	10
11	22,280	22,380	22,490	22,590	22,690	22,790	22,890	22,990	23,100	23,200	23,300	23,400	23,500	23,610	23,710	23,810	23,910	24,010	24,110	24,220	24,320	11
12	25,150	25,260	25,370	25,480	25,590	25,700	25,810	25,920	26,030	26,140	26,250	26,360	26,470	26,580	26,690	26,800	26,910	27,020	27,130	27,240	27,350	12
13	28,110	28,230	28,350	28,470	28,590	28,700	28,820	28,940	29,060	29,180	29,290	29,410	29,530	29,650	29,770	29,880	30,000	30,120	30,240	30,360	30,470	13
14	31,160	31,280	31,410	31,540	31,660	31,790	31,920	32,040	32,170	32,300	32,420	32,550	32,680	32,800	32,930	33,050	33,180	33,300	33,430	33,550	33,680	14
15	34,280	34,420	34,550	34,690	34,820	34,960	35,090	35,220	35,360	35,490	35,630	35,760	35,900	36,030	36,160	36,300	36,430	36,560	36,700	36,830	36,960	15
16	37,440	37,580	37,720	37,870	38,010	38,150	38,300	38,440	38,580	38,720	38,870	39,010	39,150	39,290	39,430	39,580	39,720	39,860	40,000	40,140	40,280	16
17	42,830	42,960	43,090	43,220	43,350	43,480	43,610	43,730	43,860	43,990	44,110	44,240	44,370	44,490	44,620	44,740	44,870	45,000	45,120	45,250	45,370	17
18	48,230	48,350	48,460	48,580	48,690	48,800	48,920	49,030	49,140	49,250	49,360	49,470	49,580	49,690	49,800	49,910	50,020	50,130	50,240	50,350	50,460	18
19	53,630	53,730	53,830	53,930	54,030	54,130	54,230	54,320	54,420	54,510	54,610	54,700	54,800	54,890	54,990	55,080	55,180	55,270	55,370	55,460	55,560	19
20	54,860	55,060	55,250	55,440	55,640	55,830	56,030	56,220	56,410	56,600	56,800	56,990	57,180	57,370	57,560	57,760	57,950	58,140	58,330	58,530	58,720	20
21	56,090	56,380	56,670	56,960	57,250	57,540	57,820	58,110	58,400	58,690	58,980	59,270	59,560	59,850	60,140	60,430	60,720	61,010	61,300	61,590	61,880	21
22	57,320	57,700	58,090	58,470	58,850	59,240	59,620	60,010	60,390	60,780	61,170	61,550	61,940	62,330	62,710	63,100	63,490	63,880	64,270	64,650	65,040	22
23	57,320	57,700	58,090	58,470	58,850	59,240	59,620	60,010	60,390	60,780	61,170	61,550	61,940	62,330	62,710	63,100	63,490	63,880	64,270	64,650	65,040	23
24	57,320	57,700	58,090	58,470	58,850	59,240	59,620	60,010	60,390	60,780	61,170	61,550	61,940	62,330	62,710	63,100	63,490	63,880	64,270	64,650	65,040	24
25	57,320	57,700	58,090	58,470	58,850	59,240	59,620	60,010	60,390	60,780	61,170	61,550	61,940	62,330	62,710	63,100	63,490	63,880	64,270	64,650	65,040	25
26	57,320	57,700	58,090	58,470	58,850	59,240	59,620	60,010	60,390	60,780	61,170	61,550	61,940	62,330	62,710	63,100	63,490	63,880	64,270	64,650	65,040	26
27	57,320	57,700	58,090	58,470	58,850	59,240	59,620	60,010	60,390	60,780	61,170	61,550	61,940	62,330	62,710	63,100	63,490	63,880	64,270	64,650	65,040	27
28	57,320	57,700	58,090	58,470	58,850	59,240	59,620	60,010	60,390	60,780	61,170	61,550	61,940	62,330	62,710	63,100	63,490	63,880	64,270	64,650	65,040	28

GATE ARRANGEMENT	HEADWATER ELEVATION																				GATE ARRANGEMENT
	802.0	802.1	802.2	802.3	802.4	802.5	802.6	802.7	802.8	802.9	803.0	803.1	803.2	803.3	803.4	803.5	803.6	803.7	803.8	803.9	804.0	
1	1,810	1,810	1,820	1,830	1,840	1,840	1,850	1,860	1,870	1,870	1,880	1,890	1,890	1,900	1,910	1,920	1,920	1,930	1,940	1,940	1,950	1
2	3,890	3,900	3,920	3,930	3,950	3,970	3,980	4,000	4,010	4,030	4,040	4,060	4,080	4,090	4,110	4,120	4,140	4,150	4,170	4,180	4,200	2
3	6,000	6,020	6,050	6,070	6,100	6,120	6,150	6,170	6,200	6,220	6,240	6,270	6,290	6,320	6,340	6,360	6,390	6,410	6,430	6,460	6,480	3
4	8,130	8,170	8,200	8,230	8,270	8,300	8,340	8,370	8,410	8,440	8,470	8,510	8,540	8,570	8,610	8,640	8,670	8,710	8,740	8,770	8,810	4
5	10,420	10,460	10,510	10,550	10,590	10,640	10,680	10,720	10,770	10,810	10,850	10,900	10,940	10,980	11,020	11,070	11,110	11,150	11,190	11,230	11,270	5
6	12,520	12,570	12,620	12,670	12,720	12,780	12,830	12,880	12,930	12,980	13,030	13,080	13,130	13,180	13,230	13,280	13,330	13,380	13,420	13,470	13,520	6
7	14,880	14,940	15,000	15,060	15,120	15,180	15,250	15,310	15,370	15,430	15,490	15,550	15,610	15,670	15,730	15,790	15,850	15,910	15,960	16,020	16,080	7
8	17,180	17,250	17,320	17,400	17,470	17,540	17,610	17,690	17,760	17,830	17,900	17,970	18,040	18,110	18,180	18,250	18,320	18,390	18,450	18,520	18,590	8
9	19,580	19,660	19,740	19,820	19,910	19,990	20,070	20,150	20,230	20,310	20,390	20,470	20,550	20,630	20,710	20,790	20,870	20,950	21,030	21,100	21,180	9
10	21,960	22,050	22,140	22,240	22,330	22,420	22,510	22,600	22,690	22,780	22,870	22,960	23,050	23,140	23,230	23,320	23,410	23,490	23,580	23,670	23,760	10
11	24,320	24,420	24,520	24,620	24,720	24,820	24,920	25,020	25,120	25,220	25,320	25,420	25,520	25,620	25,720	25,810	25,910	26,010	26,110	26,200	26,300	11
12	27,350	27,460	27,570	27,680	27,790	27,900	28,010	28,110	28,220	28,330	28,440	28,540	28,650	28,760	28,860	28,970	29,080	29,180	29,280	29,390	29,490	12
13	30,470	30,590	30,710	30,820	30,940	31,060	31,170	31,290	31,400	31,520	31,630	31,750	31,860	31,980	32,090	32,200	32,320	32,430	32,540	32,650	32,760	13
14	33,680	33,800	33,930	34,050	34,180	34,300	34,420	34,550	34,670	34,790	34,920	35,040	35,160	35,280	35,400	35,520	35,640	35,760	35,880	36,000	36,120	14
15	36,960	37,090	37,230	37,360	37,490	37,620	37,750	37,880	38,010	38,140	38,270	38,400	38,530	38,660	38,780	38,910	39,040	39,170	39,290	39,420	39,540	15
16	40,280	40,420	40,560	40,700	40,840	40,980	41,110	41,250	41,390	41,530	41,660	41,800	41,940	42,070	42,210	42,340	42,480	42,610	42,740	42,870	43,010	16
17	45,370	45,500	45,620	45,750	45,870	46,000	46,120	46,250	46,370	46,500	46,620	46,750	46,880	47,000	47,130	47,260	47,380	47,510	47,640	47,760	47,890	17
18	50,460	50,570	50,690	50,800	50,910	51,020	51,130	51,240	51,360	51,470	51,590	51,700	51,820	51,930	52,050	52,170	52,290	52,410	52,530	52,650	52,770	18
19	55,560	55,650	55,750	55,850	55,940	56,040	56,140	56,240	56,340	56,440	56,550	56,650	56,760	56,860	56,970	57,080	57,190	57,310	57,420	57,540	57,660	19
20	58,720	58,910	59,110	59,300	59,500	59,690	59,890	60,090	60,290	60,480	60,680	60,890	61,090	61,290	61,490	61,700	61,910	62,110	62,320	62,530	62,750	20
21	61,880	62,170	62,470	62,760	63,050	63,350	63,640	63,930	64,230	64,530	64,820	65,120	65,420	65,720	66,020	66,320	66,620	66,920	67,220	67,530	67,830	21
22	65,040	65,430	65,820	66,210	66,610	67,000	67,390	67,780	68,170	68,570	68,960	69,350	69,750	70,140	70,540	70,930	71,330	71,730	72,120	72,520	72,920	22
23	65,040	65,430	65,820	66,210	66,610	67,000	67,390	67,780	68,170	68,570	68,960	69,350	69,750	70,140	70,540	70,930	71,330	71,730	72,120	72,520	72,920	23
24	65,040	65,430	65,820	66,210	66,610	67,000	67,390	67,780	68,170	68,570	68,960	69,350	69,750	70,140	70,540	70,930	71,330	71,730	72,120	72,520	72,920	24
25	65,040	65,430	65,820	66,210	66,610	67,000	67,390	67,780	68,170	68,570	68,960	69,350	69,750	70,140	70,540	70,930	71,330	71,730	72,120	72,520	72,920	25
26	65,040	65,430	65,820	66,210	66,610	67,000	67,390	67,780	68,170	68,570	68,960	69,350	69,750	70,140	70,540	70,930	71,330	71,730	72,120	72,520	72,920	26
27	65,040	65,430	65,820	66,210	66,610	67,000	67,390	67,780	68,170	68,570	68,960	69,350	69,750	70,140	70,540	70,930	71,330	71,730	72,120	72,520	72,920	27
28	65,040	65,430	65,820	66,210	66,610	67,000	67,390	67,780	68,170	68,570	68,960	69,350	69,750	70,140	70,540	70,930	71,330	71,730	72,120	72,520	72,920	28

HEADWATER 800 to 804
TAILWATER 789.51 to 790.5

MAY 2008

TELLICO DAM
SPILLWAY DISCHARGE
IN CUBIC FEET PER SECOND

HEADWATER ELEVATION

GATE ARRANGEMENT	804.0	804.1	804.2	804.3	804.4	804.5	804.6	804.7	804.8	804.9	805.0	805.1	805.2	805.3	805.4	805.5	805.6	805.7	805.8	805.9	806.0	GATE ARRANGEMENT
1	1,950	1,960	1,970	1,970	1,980	1,990	1,990	2,000	2,010	2,010	2,020	2,030	2,030	2,040	2,050	2,050	2,060	2,070	2,070	2,080	2,090	1
2	4,200	4,210	4,230	4,240	4,260	4,270	4,290	4,300	4,310	4,330	4,340	4,360	4,370	4,390	4,400	4,420	4,430	4,440	4,460	4,470	4,490	2
3	6,480	6,500	6,530	6,550	6,570	6,590	6,620	6,640	6,660	6,690	6,710	6,730	6,750	6,770	6,800	6,820	6,840	6,860	6,880	6,910	6,930	3
4	8,810	8,840	8,870	8,900	8,940	8,970	9,000	9,030	9,060	9,100	9,130	9,160	9,190	9,220	9,250	9,280	9,310	9,350	9,380	9,410	9,440	4
5	11,270	11,320	11,360	11,400	11,440	11,480	11,520	11,560	11,600	11,640	11,680	11,720	11,760	11,800	11,840	11,880	11,910	11,950	11,990	12,030	12,070	5
6	13,520	13,570	13,620	13,660	13,710	13,760	13,810	13,850	13,900	13,950	13,990	14,040	14,080	14,130	14,180	14,220	14,270	14,310	14,360	14,400	14,450	6
7	16,080	16,140	16,190	16,250	16,310	16,360	16,420	16,470	16,530	16,580	16,640	16,690	16,740	16,800	16,850	16,900	16,960	17,010	17,060	17,110	17,160	7
8	18,590	18,650	18,720	18,780	18,850	18,910	18,980	19,040	19,100	19,160	19,230	19,290	19,350	19,410	19,470	19,530	19,590	19,650	19,710	19,770	19,820	8
9	21,180	21,250	21,330	21,400	21,480	21,550	21,630	21,700	21,770	21,840	21,920	21,990	22,060	22,130	22,200	22,270	22,340	22,410	22,480	22,540	22,610	9
10	23,760	23,840	23,930	24,010	24,100	24,180	24,260	24,350	24,430	24,510	24,590	24,680	24,760	24,840	24,920	25,000	25,080	25,160	25,230	25,310	25,390	10
11	26,300	26,400	26,490	26,590	26,680	26,780	26,870	26,960	27,060	27,150	27,240	27,340	27,430	27,520	27,610	27,700	27,790	27,880	27,970	28,060	28,150	11
12	29,490	29,600	29,700	29,800	29,900	30,010	30,110	30,210	30,310	30,410	30,510	30,610	30,710	30,800	30,900	31,000	31,100	31,190	31,290	31,380	31,480	12
13	32,760	32,870	32,980	33,090	33,200	33,310	33,420	33,530	33,640	33,740	33,850	33,960	34,060	34,170	34,270	34,380	34,480	34,590	34,690	34,790	34,900	13
14	36,120	36,230	36,350	36,470	36,580	36,700	36,810	36,930	37,040	37,160	37,270	37,380	37,490	37,610	37,720	37,830	37,940	38,050	38,160	38,270	38,380	14
15	39,540	39,670	39,790	39,910	40,040	40,160	40,280	40,400	40,520	40,640	40,760	40,880	41,000	41,120	41,240	41,350	41,470	41,590	41,710	41,820	41,940	15
16	43,010	43,140	43,270	43,400	43,530	43,660	43,780	43,910	44,040	44,170	44,290	44,420	44,550	44,670	44,790	44,920	45,040	45,170	45,290	45,410	45,530	16
17	47,890	48,020	48,150	48,270	48,400	48,530	48,660	48,790	48,920	49,050	49,180	49,310	49,440	49,570	49,700	49,830	49,960	50,100	50,230	50,360	50,490	17
18	52,770	52,900	53,030	53,150	53,280	53,410	53,540	53,670	53,800	53,930	54,070	54,200	54,340	54,470	54,610	54,750	54,890	55,030	55,160	55,300	55,440	18
19	57,660	57,780	57,900	58,030	58,160	58,290	58,420	58,550	58,680	58,820	58,960	59,090	59,230	59,380	59,520	59,660	59,810	59,950	60,100	60,250	60,400	19
20	62,750	62,960	63,170	63,390	63,570	63,700	63,840	63,980	64,120	64,250	64,390	64,530	64,680	64,820	64,960	65,100	65,240	65,390	65,530	65,670	65,820	20
21	67,830	68,140	68,450	68,750	68,980	69,120	69,260	69,400	69,550	69,690	69,830	69,970	70,120	70,260	70,400	70,540	70,680	70,820	70,960	71,100	71,240	21
22	72,920	73,320	73,720	74,110	74,390	74,540	74,690	74,830	74,980	75,130	75,270	75,410	75,560	75,700	75,840	75,980	76,110	76,250	76,390	76,520	76,660	22
23	72,920	73,320	73,720	74,110	74,430	74,660	74,900	75,130	75,360	75,590	75,820	76,050	76,280	76,510	76,740	76,960	77,190	77,420	77,640	77,870	78,090	23
24	72,920	73,320	73,720	74,110	74,470	74,790	75,100	75,420	75,740	76,050	76,370	76,690	77,000	77,320	77,630	77,950	78,270	78,580	78,900	79,210	79,530	24
25	72,920	73,320	73,720	74,110	74,510	74,910	75,310	75,720	76,120	76,520	76,920	77,320	77,730	78,130	78,530	78,940	79,340	79,750	80,150	80,560	80,970	25
26	72,920	73,320	73,720	74,110	74,510	74,910	75,310	75,720	76,120	76,520	76,920	77,320	77,730	78,130	78,530	78,940	79,340	79,750	80,150	80,560	80,970	26
27	72,920	73,320	73,720	74,110	74,510	74,910	75,310	75,720	76,120	76,520	76,920	77,320	77,730	78,130	78,530	78,940	79,340	79,750	80,150	80,560	80,970	27
28	72,920	73,320	73,720	74,110	74,510	74,910	75,310	75,720	76,120	76,520	76,920	77,320	77,730	78,130	78,530	78,940	79,340	79,750	80,150	80,560	80,970	28

HEADWATER ELEVATION

GATE ARRANGEMENT	806.0	806.1	806.2	806.3	806.4	806.5	806.6	806.7	806.8	806.9	807.0	807.1	807.2	807.3	807.4	807.5	807.6	807.7	807.8	807.9	808.0	GATE ARRANGEMENT
1	2,090	2,090	2,100	2,110	2,110	2,120	2,120	2,130	2,140	2,140	2,150	2,160	2,160	2,170	2,180	2,180	2,190	2,190	2,200	2,210	2,210	1
2	4,490	4,500	4,510	4,530	4,540	4,560	4,570	4,580	4,600	4,610	4,620	4,640	4,650	4,670	4,680	4,690	4,710	4,720	4,730	4,750	4,760	2
3	6,930	6,950	6,970	6,990	7,010	7,040	7,060	7,080	7,100	7,120	7,140	7,160	7,180	7,200	7,220	7,250	7,270	7,290	7,310	7,330	7,350	3
4	9,440	9,470	9,500	9,530	9,560	9,590	9,620	9,650	9,680	9,710	9,740	9,770	9,800	9,830	9,860	9,880	9,910	9,940	9,970	10,000	10,030	4
5	12,070	12,110	12,140	12,180	12,220	12,260	12,290	12,330	12,370	12,410	12,440	12,480	12,520	12,550	12,590	12,630	12,660	12,700	12,740	12,770	12,810	5
6	14,450	14,490	14,530	14,580	14,620	14,670	14,710	14,750	14,800	14,840	14,880	14,930	14,970	15,010	15,060	15,100	15,140	15,180	15,230	15,270	15,310	6
7	17,160	17,220	17,270	17,320	17,370	17,420	17,470	17,520	17,570	17,620	17,670	17,720	17,770	17,820	17,870	17,920	17,970	18,020	18,070	18,120	18,170	7
8	19,820	19,880	19,940	20,000	20,060	20,110	20,170	20,230	20,280	20,340	20,400	20,450	20,510	20,560	20,620	20,680	20,730	20,790	20,840	20,900	20,960	8
9	22,610	22,680	22,750	22,820	22,880	22,950	23,020	23,080	23,150	23,210	23,280	23,350	23,410	23,480	23,540	23,610	23,670	23,730	23,800	23,860	23,930	9
10	25,390	25,470	25,550	25,620	25,700	25,780	25,850	25,930	26,000	26,080	26,150	26,230	26,300	26,380	26,450	26,520	26,600	26,670	26,740	26,810	26,890	10
11	28,150	28,230	28,320	28,410	28,500	28,580	28,670	28,760	28,840	28,930	29,010	29,100	29,180	29,260	29,350	29,430	29,510	29,590	29,680	29,760	29,840	11
12	31,480	31,570	31,670	31,760	31,860	31,950	32,040	32,140	32,230	32,320	32,410	32,500	32,600	32,690	32,780	32,870	32,960	33,050	33,130	33,220	33,310	12
13	34,900	35,000	35,100	35,200	35,300	35,400	35,500	35,600	35,700	35,800	35,900	36,000	36,100	36,200	36,290	36,390	36,490	36,580	36,680	36,780	36,870	13
14	38,380	38,490	38,600	38,700	38,810	38,920	39,030	39,130	39,240	39,340	39,450	39,560	39,660	39,770	39,870	39,970	40,080	40,180	40,290	40,390	40,490	14
15	41,940	42,050	42,170	42,280	42,400	42,510	42,620	42,740	42,850	42,960	43,080	43,190	43,300	43,410	43,520	43,630	43,750	43,860	43,970	44,080	44,190	15
16	45,530	45,660	45,780	45,900	46,020	46,140	46,260	46,380	46,500	46,620	46,740	46,860	46,980	47,090	47,210	47,330	47,450	47,570	47,680	47,800	47,920	16
17	50,490	50,620	50,750	50,880	51,010	51,140	51,280	51,410	51,540	51,670	51,800	51,930	52,060	52,190	52,320	52,450	52,580	52,710	52,840	52,960	53,090	17
18	55,440	55,580	55,730	55,870	56,010	56,150	56,290	56,430	56,580	56,720	56,860	57,000	57,140	57,280	57,430	57,570	57,710	57,850	57,990	58,130	58,270	18
19	60,400	60,550	60,700	60,850	61,000	61,150	61,310	61,460	61,610	61,770	61,920	62,070	62,230	62,380	62,530	62,690	62,840	62,990	63,140	63,290	63,440	19
20	65,820	65,950	66,080	66,210	66,350	66,480	66,610	66,740	66,870	67,000	67,140	67,270	67,400	67,530	67,660	67,780	67,910	68,040	68,170	68,290	68,420	20
21	71,240	71,350	71,470	71,580	71,690	71,800	71,910	72,020	72,130	72,240	72,350	72,460	72,570	72,670	72,780	72,880	72,990	73,090	73,190	73,290	73,390	21
22	76,660	76,750	76,850	76,940	77,030	77,130	77,220	77,310	77,390	77,480	77,570	77,650	77,740	77,820	77,900	77,980	78,060	78,140	78,220	78,290	78,370	22
23	78,090	78,290	78,490	78,690	78,890	79,090	79,280	79,480	79,670	79,870	80,060	80,260	80,450	80,640	80,830	81,030	81,220	81,410	81,600	81,790	81,970	23
24	79,530	79,830	80,140	80,440	80,740	81,040	81,350	81,650	81,950	82,260	82,560	82,860	83,160	83,470	83,770	84,070	84,370	84,670	84,980	85,280	85,580	24
25	80,970	81,370	81,780	82,190	82,600	83,000	83,410	83,820	84,230	84,640	85,050	85,470	85,880	86,290	86,700	87,110	87,530	87,940	88,360	88,770	89,190	25
26	80,970	81,370	81,780	82,190	82,600	83,000	83,410	83,820	84,230	84,640	85,050	85,470	85,880	86,290	86,700	87,110	87,530	87,940	88,360	88,770	89,190	26
27	80,970	81,370	81,780	82,190	82,600	83,000	83,410	83,820	84,230	84,640	85,050	85,470	85,880	86,290	86,700	87,110	87,530	87,940	88,360	88,770	89,190	27
28	80,970	81,370	81,780	82,190	82,600	83,000	83,410	83,820	84,230	84,640	85,050	85,470	85,880	86,290	86,700	87,110	87,530	87,940	88,360	88,770	89,190	28

MAY 2008

HEADWATER 804 to 808
TAILWATER 789.51 to 790.5

TELLICO DAM
SPILLWAY DISCHARGE
IN CUBIC FEET PER SECOND

HEADWATER ELEVATION

GATE ARRANGEMENT	808.0	808.1	808.2	808.3	808.4	808.5	808.6	808.7	808.8	808.9	809.0	809.1	809.2	809.3	809.4	809.5	809.6	809.7	809.8	809.9	810.0	GATE ARRANGEMENT
1	2,210	2,220	2,220	2,230	2,240	2,240	2,250	2,260	2,260	2,270	2,270	2,280	2,290	2,290	2,300	2,300	2,310	2,310	2,320	2,330	2,330	1
2	4,760	4,770	4,780	4,800	4,810	4,820	4,840	4,850	4,860	4,880	4,890	4,900	4,910	4,930	4,940	4,950	4,970	4,980	4,990	5,000	5,020	2
3	7,350	7,370	7,390	7,410	7,430	7,450	7,470	7,490	7,510	7,530	7,550	7,570	7,590	7,610	7,630	7,650	7,670	7,690	7,710	7,730	7,750	3
4	10,030	10,060	10,090	10,110	10,140	10,170	10,200	10,230	10,250	10,280	10,310	10,340	10,370	10,390	10,420	10,450	10,480	10,500	10,530	10,560	10,580	4
5	12,810	12,850	12,880	12,920	12,950	12,990	13,030	13,060	13,100	13,130	13,170	13,200	13,240	13,270	13,310	13,340	13,380	13,410	13,450	13,480	13,520	5
6	15,310	15,350	15,400	15,440	15,480	15,520	15,560	15,610	15,650	15,690	15,730	15,770	15,820	15,860	15,900	15,940	15,980	16,020	16,070	16,110	16,150	6
7	18,170	18,220	18,270	18,320	18,370	18,420	18,470	18,520	18,570	18,620	18,670	18,720	18,770	18,820	18,860	18,910	18,960	19,010	19,060	19,110	19,160	7
8	20,960	21,010	21,070	21,130	21,180	21,240	21,290	21,350	21,410	21,460	21,520	21,580	21,630	21,690	21,740	21,800	21,860	21,910	21,970	22,030	22,080	8
9	23,930	23,990	24,060	24,120	24,180	24,250	24,310	24,380	24,440	24,500	24,570	24,630	24,690	24,760	24,820	24,880	24,950	25,010	25,070	25,140	25,200	9
10	26,890	26,960	27,030	27,100	27,170	27,250	27,320	27,390	27,460	27,530	27,600	27,670	27,740	27,810	27,880	27,950	28,020	28,090	28,160	28,230	28,300	10
11	29,840	29,920	30,000	30,080	30,160	30,240	30,320	30,390	30,470	30,550	30,630	30,710	30,780	30,860	30,940	31,010	31,090	31,160	31,240	31,320	31,390	11
12	33,310	33,400	33,490	33,570	33,660	33,750	33,830	33,920	34,010	34,090	34,180	34,260	34,350	34,430	34,510	34,600	34,680	34,770	34,850	34,930	35,020	12
13	36,870	36,970	37,060	37,160	37,250	37,340	37,440	37,530	37,620	37,720	37,810	37,900	37,990	38,090	38,180	38,270	38,360	38,450	38,540	38,630	38,720	13
14	40,490	40,590	40,700	40,800	40,900	41,000	41,110	41,210	41,310	41,410	41,510	41,610	41,710	41,810	41,910	42,010	42,110	42,210	42,310	42,410	42,510	14
15	44,190	44,300	44,410	44,520	44,630	44,740	44,850	44,950	45,060	45,170	45,280	45,390	45,500	45,610	45,710	45,820	45,930	46,040	46,150	46,250	46,360	15
16	47,920	48,040	48,150	48,270	48,390	48,500	48,620	48,740	48,850	48,970	49,090	49,200	49,320	49,440	49,550	49,670	49,780	49,900	50,020	50,130	50,250	16
17	53,090	53,220	53,350	53,480	53,600	53,730	53,860	53,980	54,110	54,230	54,360	54,480	54,610	54,730	54,860	54,980	55,100	55,230	55,350	55,470	55,600	17
18	58,270	58,410	58,540	58,680	58,820	58,950	59,090	59,230	59,360	59,490	59,630	59,760	59,890	60,030	60,160	60,290	60,420	60,550	60,680	60,810	60,940	18
19	63,440	63,590	63,740	63,890	64,030	64,180	64,330	64,470	64,610	64,760	64,900	65,040	65,180	65,320	65,460	65,600	65,740	65,880	66,020	66,160	66,290	19
20	68,420	68,570	68,710	68,860	69,010	69,150	69,300	69,440	69,590	69,730	69,870	70,010	70,150	70,290	70,430	70,570	70,710	70,850	70,990	71,130	71,260	20
21	73,390	73,540	73,690	73,840	73,980	74,130	74,270	74,420	74,560	74,700	74,840	74,990	75,130	75,270	75,410	75,540	75,680	75,820	75,960	76,100	76,230	21
22	78,370	78,520	78,660	78,810	78,960	79,100	79,240	79,390	79,530	79,670	79,820	79,960	80,100	80,240	80,380	80,520	80,650	80,790	80,930	81,070	81,200	22
23	81,970	82,210	82,450	82,680	82,920	83,160	83,390	83,630	83,860	84,100	84,330	84,560	84,800	85,030	85,270	85,500	85,730	85,960	86,200	86,430	86,660	23
24	85,580	85,910	86,230	86,560	86,890	87,210	87,540	87,870	88,190	88,520	88,850	89,170	89,500	89,830	90,150	90,480	90,810	91,140	91,460	91,790	92,120	24
25	89,190	89,600	90,020	90,430	90,850	91,270	91,690	92,100	92,520	92,940	93,360	93,780	94,200	94,620	95,040	95,460	95,890	96,310	96,730	97,150	97,580	25
26	89,190	89,600	90,020	90,430	90,850	91,270	91,690	92,100	92,520	92,940	93,360	93,780	94,200	94,620	95,040	95,460	95,890	96,310	96,730	97,150	97,580	26
27	89,190	89,600	90,020	90,430	90,850	91,270	91,690	92,100	92,520	92,940	93,360	93,780	94,200	94,620	95,040	95,460	95,890	96,310	96,730	97,150	97,580	27
28	89,190	89,600	90,020	90,430	90,850	91,270	91,690	92,100	92,520	92,940	93,360	93,780	94,200	94,620	95,040	95,460	95,890	96,310	96,730	97,150	97,580	28

HEADWATER ELEVATION

GATE ARRANGEMENT	810.0	810.1	810.2	810.3	810.4	810.5	810.6	810.7	810.8	810.9	811.0	811.1	811.2	811.3	811.4	811.5	811.6	811.7	811.8	811.9	812.0	GATE ARRANGEMENT
1	2,330	2,340	2,340	2,350	2,360	2,360	2,370	2,370	2,380	2,380	2,390	2,400	2,400	2,410	2,410	2,420	2,420	2,430	2,430	2,440	2,450	1
2	5,020	5,030	5,040	5,050	5,070	5,080	5,090	5,100	5,120	5,130	5,140	5,150	5,160	5,180	5,190	5,200	5,210	5,220	5,240	5,250	5,260	2
3	7,750	7,760	7,780	7,800	7,820	7,840	7,860	7,880	7,900	7,920	7,940	7,960	7,970	7,990	8,010	8,030	8,050	8,070	8,090	8,100	8,120	3
4	10,580	10,610	10,640	10,660	10,690	10,720	10,740	10,770	10,800	10,820	10,850	10,870	10,900	10,930	10,950	10,980	11,000	11,030	11,060	11,080	11,110	4
5	13,520	13,550	13,590	13,620	13,660	13,690	13,730	13,760	13,790	13,830	13,860	13,890	13,930	13,960	13,990	14,030	14,060	14,090	14,130	14,160	14,190	5
6	16,150	16,190	16,230	16,270	16,310	16,350	16,390	16,440	16,480	16,520	16,560	16,600	16,640	16,680	16,720	16,760	16,800	16,840	16,880	16,920	16,960	6
7	19,160	19,210	19,260	19,310	19,360	19,400	19,450	19,500	19,550	19,600	19,650	19,690	19,740	19,790	19,840	19,890	19,930	19,980	20,030	20,080	20,120	7
8	22,080	22,140	22,190	22,250	22,310	22,360	22,420	22,470	22,530	22,580	22,640	22,700	22,750	22,810	22,860	22,920	22,970	23,030	23,080	23,130	23,190	8
9	25,200	25,260	25,330	25,390	25,450	25,510	25,580	25,640	25,700	25,760	25,820	25,890	25,950	26,010	26,070	26,130	26,190	26,250	26,320	26,380	26,440	9
10	28,300	28,370	28,440	28,510	28,570	28,640	28,710	28,780	28,850	28,920	28,980	29,050	29,120	29,190	29,260	29,320	29,390	29,460	29,530	29,590	29,660	10
11	31,390	31,470	31,540	31,620	31,690	31,770	31,840	31,910	31,990	32,060	32,140	32,210	32,280	32,360	32,430	32,510	32,580	32,650	32,730	32,800	32,870	11
12	35,020	35,100	35,180	35,270	35,350	35,430	35,510	35,600	35,680	35,760	35,840	35,920	36,010	36,090	36,170	36,250	36,330	36,410	36,500	36,580	36,660	12
13	38,720	38,810	38,910	39,000	39,090	39,180	39,270	39,360	39,440	39,530	39,620	39,710	39,800	39,890	39,980	40,070	40,160	40,250	40,340	40,430	40,520	13
14	42,510	42,610	42,710	42,810	42,910	43,010	43,110	43,200	43,300	43,400	43,500	43,600	43,700	43,790	43,890	43,990	44,090	44,180	44,280	44,380	44,470	14
15	46,360	46,470	46,580	46,680	46,790	46,900	47,000	47,110	47,220	47,320	47,430	47,530	47,640	47,750	47,850	47,960	48,060	48,170	48,270	48,380	48,480	15
16	50,250	50,360	50,480	50,590	50,710	50,820	50,940	51,050	51,170	51,280	51,400	51,510	51,620	51,740	51,850	51,970	52,080	52,190	52,310	52,420	52,530	16
17	55,600	55,720	55,840	55,960	56,080	56,210	56,330	56,450	56,570	56,690	56,810	56,930	57,050	57,170	57,290	57,410	57,530	57,650	57,770	57,890	58,010	17
18	60,940	61,070	61,200	61,330	61,460	61,590	61,720	61,840	61,970	62,100	62,230	62,350	62,480	62,610	62,740	62,860	62,990	63,120	63,240	63,370	63,490	18
19	66,290	66,430	66,570	66,700	66,840	66,970	67,110	67,240	67,380	67,510	67,640	67,780	67,910	68,040	68,180	68,310	68,440	68,580	68,710	68,840	68,970	19
20	71,260	71,400	71,530	71,670	71,800	71,940	72,070	72,210	72,340	72,470	72,610	72,740	72,870	73,000	73,130	73,260	73,400	73,530	73,660	73,790	73,920	20
21	76,230	76,370	76,500	76,640	76,770	76,910	77,040	77,170	77,300	77,440	77,570	77,700	77,830	77,960	78,090	78,220	78,350	78,480	78,600	78,730	78,860	21
22	81,200	81,340	81,470	81,610	81,740	81,870	82,000	82,140	82,270	82,400	82,530	82,660	82,790	82,920	83,040	83,170	83,300	83,430	83,550	83,680	83,800	22
23	86,660	86,890	87,120	87,350	87,520	87,690	87,860	88,030	88,190	88,360	88,530	88,690	88,860	89,020	89,190	89,350	89,510	89,670	89,840	90,000	90,160	23
24	92,120	92,450	92,770	93,100	93,300	93,510	93,710	93,920	94,120	94,320	94,530	94,730	94,930	95,130	95,330	95,530	95,730	95,920	96,120	96,320	96,510	24
25	97,580	98,000	98,430	98,840	99,090	99,330	99,570	99,810	100,000	100,300	100,500	100,800	101,000	101,200	101,500	101,700	101,900	102,200	102,400	102,600	102,900	25
26	97,580	98,000	98,430	98,850	99,150	99,450	99,750	100,100	100,400	100,700	101,000	101,300	101,600	101,900	102,200	102,500	102,800	103,100	103,400	103,700	104,000	26
27	97,580	98,000	98,430	98,850	99,210	99,580	99,940	100,300	100,700	101,000	101,400	101,800	102,100	102,500	102,900	103,200	103,600	104,000	104,300	104,700	105,000	27
28	97,580	98,000	98,430	98,850	99,280	99,700	100,100	100,600	101,000	101,400	101,800	102,300	102,700	103,100	103,600	104,000	104,400	104,800	105,300	105,700	106,100	28

HEADWATER 808 to 812
TAILWATER 789.51 to 790.5

MAY 2008

TELLICO DAM
SPILLWAY DISCHARGE
IN CUBIC FEET PER SECOND

GATE ARRANGEMENT	HEADWATER ELEVATION																					GATE ARRANGEMENT
	812.0	812.1	812.2	812.3	812.4	812.5	812.6	812.7	812.8	812.9	813.0	813.1	813.2	813.3	813.4	813.5	813.6	813.7	813.8	813.9	814.0	
1	2,450	2,450	2,460	2,460	2,470	2,470	2,480	2,480	2,490	2,500	2,500	2,510	2,510	2,520	2,520	2,530	2,530	2,540	2,540	2,550	2,550	1
2	5,260	5,270	5,280	5,300	5,310	5,320	5,330	5,340	5,360	5,370	5,380	5,390	5,400	5,410	5,430	5,440	5,450	5,460	5,470	5,480	5,490	2
3	8,120	8,140	8,160	8,180	8,200	8,220	8,230	8,250	8,270	8,290	8,310	8,320	8,340	8,360	8,380	8,400	8,410	8,430	8,450	8,470	8,480	3
4	11,110	11,130	11,160	11,180	11,210	11,230	11,260	11,280	11,310	11,330	11,360	11,380	11,410	11,430	11,460	11,480	11,510	11,530	11,550	11,580	11,600	4
5	14,190	14,230	14,260	14,290	14,320	14,350	14,390	14,420	14,450	14,480	14,510	14,540	14,580	14,610	14,640	14,670	14,700	14,730	14,760	14,790	14,830	5
6	16,960	17,000	17,040	17,080	17,120	17,160	17,200	17,240	17,280	17,320	17,360	17,400	17,440	17,480	17,520	17,560	17,600	17,630	17,670	17,710	17,750	6
7	20,120	20,170	20,220	20,270	20,310	20,360	20,410	20,450	20,500	20,550	20,590	20,640	20,680	20,730	20,780	20,820	20,870	20,910	20,960	21,000	21,050	7
8	23,190	23,240	23,300	23,350	23,400	23,460	23,510	23,560	23,620	23,670	23,720	23,770	23,830	23,880	23,930	23,980	24,030	24,090	24,140	24,190	24,240	8
9	26,440	26,500	26,560	26,620	26,680	26,740	26,800	26,860	26,920	26,980	27,040	27,100	27,160	27,220	27,280	27,340	27,400	27,460	27,520	27,580	27,630	9
10	29,660	29,730	29,800	29,860	29,930	30,000	30,070	30,130	30,200	30,270	30,330	30,400	30,470	30,540	30,600	30,670	30,740	30,800	30,870	30,940	31,000	10
11	32,870	32,950	33,020	33,100	33,170	33,240	33,320	33,390	33,470	33,540	33,610	33,690	33,760	33,840	33,910	33,990	34,060	34,130	34,210	34,280	34,350	11
12	36,660	36,740	36,820	36,900	36,990	37,070	37,150	37,230	37,310	37,400	37,480	37,560	37,640	37,720	37,800	37,890	37,970	38,050	38,130	38,210	38,290	12
13	40,520	40,610	40,700	40,790	40,880	40,970	41,060	41,150	41,240	41,320	41,410	41,500	41,590	41,680	41,770	41,860	41,950	42,040	42,130	42,220	42,300	13
14	44,470	44,570	44,670	44,770	44,860	44,960	45,060	45,150	45,250	45,340	45,440	45,540	45,630	45,730	45,820	45,920	46,010	46,110	46,200	46,300	46,390	14
15	48,480	48,590	48,690	48,800	48,900	49,010	49,110	49,220	49,320	49,430	49,530	49,630	49,740	49,840	49,940	50,050	50,150	50,250	50,350	50,460	50,560	15
16	52,530	52,650	52,760	52,870	52,990	53,100	53,210	53,320	53,440	53,550	53,660	53,770	53,880	53,990	54,100	54,210	54,320	54,430	54,540	54,650	54,760	16
17	58,010	58,130	58,250	58,370	58,490	58,610	58,730	58,850	58,970	59,090	59,210	59,320	59,440	59,560	59,680	59,800	59,910	60,030	60,150	60,260	60,380	17
18	63,490	63,620	63,750	63,870	64,000	64,130	64,250	64,380	64,500	64,630	64,750	64,880	65,000	65,130	65,250	65,380	65,500	65,620	65,750	65,870	65,990	18
19	68,970	69,110	69,240	69,370	69,510	69,640	69,770	69,900	70,040	70,170	70,300	70,430	70,570	70,700	70,830	70,960	71,090	71,220	71,350	71,480	71,610	19
20	73,920	74,060	74,200	74,340	74,480	74,610	74,750	74,890	75,030	75,170	75,310	75,450	75,580	75,720	75,860	75,990	76,130	76,270	76,400	76,540	76,670	20
21	78,860	79,010	79,150	79,300	79,440	79,590	79,740	79,880	80,030	80,170	80,310	80,460	80,600	80,740	80,890	81,030	81,170	81,310	81,450	81,600	81,740	21
22	83,800	83,960	84,110	84,260	84,410	84,570	84,720	84,870	85,020	85,170	85,320	85,470	85,620	85,770	85,920	86,060	86,210	86,360	86,510	86,650	86,800	22
23	90,160	90,290	90,420	90,540	90,670	90,800	90,920	91,050	91,170	91,300	91,420	91,540	91,670	91,790	91,910	92,030	92,150	92,270	92,380	92,500	92,620	23
24	96,510	96,620	96,720	96,830	96,930	97,030	97,130	97,230	97,330	97,430	97,520	97,620	97,710	97,810	97,900	97,990	98,080	98,170	98,260	98,350	98,440	24
25	102,900	102,900	103,000	103,100	103,200	103,300	103,300	103,400	103,500	103,600	103,600	103,700	103,800	103,800	103,900	104,000	104,000	104,100	104,100	104,200	104,300	25
26	104,000	104,200	104,400	104,500	104,700	104,900	105,100	105,300	105,500	105,700	105,900	106,100	106,300	106,500	106,700	106,900	107,000	107,200	107,400	107,600	107,800	26
27	105,000	105,400	105,700	106,000	106,300	106,600	106,900	107,200	107,600	107,900	108,200	108,500	108,800	109,100	109,400	109,800	110,100	110,400	110,700	111,000	111,300	27
28	106,100	106,600	107,000	107,400	107,900	108,300	108,700	109,200	109,600	110,000	110,500	110,900	111,300	111,800	112,200	112,700	113,100	113,500	114,000	114,400	114,900	28

GATE ARRANGEMENT	HEADWATER ELEVATION																					GATE ARRANGEMENT
	814.0	814.1	814.2	814.3	814.4	814.5	814.6	814.7	814.8	814.9	815.0	815.1	815.2	815.3	815.4	815.5	815.6	815.7	815.8	815.9	816.0	
1	2,550	2,560	2,570	2,570	2,580	2,580	2,590	2,590	2,600	2,600	2,610	2,610	2,620	2,620	2,630	2,630						1
2	5,490	5,510	5,520	5,530	5,540	5,550	5,560	5,570	5,590	5,600	5,610	5,620	5,630	5,640	5,650	5,660	5,670	5,690	5,700	5,710	5,720	2
3	8,480	8,500	8,520	8,540	8,550	8,570	8,590	8,610	8,620	8,640	8,660	8,680	8,690	8,710	8,730	8,750	8,760	8,780	8,800	8,810	8,830	3
4	11,600	11,630	11,650	11,680	11,700	11,720	11,750	11,770	11,800	11,820	11,840	11,870	11,890	11,920	11,940	11,960	11,990	12,010	12,030	12,060	12,080	4
5	14,830	14,860	14,890	14,920	14,950	14,980	15,010	15,040	15,070	15,100	15,130	15,160	15,200	15,230	15,260	15,290	15,320	15,350	15,380	15,410	15,440	5
6	17,750	17,790	17,830	17,870	17,910	17,950	17,990	18,020	18,060	18,100	18,140	18,180	18,220	18,260	18,290	18,330	18,370	18,410	18,450	18,490	18,530	6
7	21,050	21,090	21,140	21,190	21,230	21,280	21,320	21,360	21,410	21,450	21,500	21,540	21,590	21,630	21,680	21,720	21,770	21,810	21,850	21,900	21,940	7
8	24,240	24,290	24,340	24,400	24,450	24,500	24,550	24,600	24,650	24,700	24,750	24,800	24,850	24,900	24,950	25,000	25,050	25,100	25,150	25,200	25,250	8
9	27,630	27,690	27,750	27,810	27,870	27,930	27,990	28,040	28,100	28,160	28,220	28,280	28,330	28,390	28,450	28,510	28,570	28,620	28,680	28,740	28,800	9
10	31,000	31,070	31,130	31,200	31,270	31,330	31,400	31,470	31,530	31,600	31,660	31,730	31,790	31,860	31,920	31,990	32,050	32,120	32,180	32,250	32,310	10
11	34,350	34,430	34,500	34,580	34,650	34,720	34,800	34,870	34,940	35,020	35,090	35,160	35,240	35,310	35,380	35,450	35,530	35,600	35,670	35,740	35,810	11
12	38,290	38,370	38,450	38,530	38,610	38,700	38,780	38,860	38,940	39,020	39,090	39,170	39,250	39,330	39,410	39,490	39,570	39,650	39,720	39,800	39,880	12
13	42,300	42,390	42,480	42,570	42,660	42,740	42,830	42,920	43,010	43,090	43,180	43,260	43,350	43,440	43,520	43,610	43,690	43,770	43,860	43,940	44,030	13
14	46,390	46,480	46,580	46,670	46,760	46,860	46,950	47,040	47,130	47,230	47,320	47,410	47,500	47,590	47,680	47,770	47,860	47,950	48,040	48,130	48,210	14
15	50,560	50,660	50,760	50,860	50,960	51,060	51,160	51,260	51,360	51,460	51,560	51,660	51,750	51,850	51,950	52,040	52,140	52,240	52,330	52,420	52,520	15
16	54,760	54,870	54,980	55,090	55,190	55,300	55,410	55,510	55,620	55,720	55,830	55,930	56,030	56,140	56,240	56,340	56,440	56,540	56,640	56,740	56,840	16
17	60,380	60,490	60,610	60,720	60,830	60,950	61,060	61,170	61,280	61,400	61,510	61,620	61,730	61,830	61,940	62,050	62,160	62,260	62,370	62,470	62,580	17
18	65,990	66,110	66,240	66,360	66,480	66,600	66,720	66,830	66,950	67,070	67,190	67,300	67,420	67,530	67,650	67,760	67,870	67,980	68,090	68,200	68,310	18
19	71,610	71,740	71,860	71,990	72,120	72,240	72,370	72,490	72,620	72,740	72,870	72,990	73,110	73,230	73,350	73,470	73,590	73,700	73,820	73,930	74,050	19
20	76,670	76,810	76,940	77,070	77,210	77,340	77,470	77,600	77,730	77,860	77,990	78,120	78,250	78,380	78,500	78,630	78,760	78,880	79,000	79,130	79,250	20
21	81,740	81,880	82,020	82,160	82,290	82,430	82,570	82,710	82,850	82,980	83,120	83,260	83,390	83,530	83,660	83,790	83,930	84,060	84,190	84,320	84,450	21
22	86,800	86,950	87,090	87,240	87,380	87,530	87,670	87,820	87,960	88,100	88,250	88,390	88,530	88,670	88,820	88,960	89,100	89,240	89,380	89,520	89,660	22
23	92,620	92,750	92,880	93,010	93,140	93,270	93,400	93,530	93,660	93,780	93,910	94,040	94,160	94,290	94,410	94,540	94,660	94,780	94,910	95,030	95,150	23
24	98,440	98,550	98,670	98,790	98,900	99,020	99,130	99,240	99,350	99,460	99,580	99,680	99,790	99,900	100,000	100,100	100,200	100,300	100,400	100,500	100,600	24
25	104,300	104,400	104,500	104,600	104,700	104,800	104,900	105,000	105,100	105,100	105,200	105,300	105,400	105,500	105,600	105,700	105,800	105,900	106,000	106,000	106,100	25
26	107,800	108,000	108,200	108,400	108,600	108,900	109,100	109,300	109,500	109,700	110,400	110,500	110,500	110,600	110,700	110,700	110,800	110,900	110,900	111,000	111,000	26
27	111,300	111,700	112,000	112,300	112,600	113,000	113,300	113,600	113,900	114,300	115,600	115,600	115,700	115,700	115,700	115,800	115,800	115,800	115,900	115,900	115,900	27
28	114,900	115,300	115,700	116,200	116,600	117,100	117,500	118,000	118,400	118,800	120,800	120,800	120,800	120,800	120,800	120,800	120,800	120,800	120,800	120,800	120,800	28

MAY 2008

See special instruction for preventing gate overflow on page 2.

HEADWATER 812 to 816
TAILWATER 789.51 to 790.5

TELLICO DAM
SPILLWAY DISCHARGE
IN CUBIC FEET PER SECOND

HEADWATER ELEVATION

GATE ARRANGEMENT	816.0	816.1	816.2	816.3	816.4	816.5	816.6	816.7	816.8	816.9	817.0	817.1	817.2	817.3	817.4	817.5	817.6	817.7	817.8	817.9	818.0	GATE ARRANGEMENT
1																						1
2	5, 720	5, 730	5, 740																			2
3	8, 830	8, 850	8, 860	8, 880	8, 900	8, 920	8, 930	8, 950	8, 970	8, 980	9, 000											3
4	12, 080	12, 100	12, 130	12, 150	12, 180	12, 200	12, 220	12, 250	12, 270	12, 290	12, 320	12, 520	12, 890	13, 350	13, 900	14, 530	15, 220	15, 980				4
5	15, 440	15, 470	15, 510	15, 540	15, 570	15, 600	15, 630	15, 660	15, 690	15, 720	15, 760	15, 970	16, 340	16, 820	17, 380	18, 010	18, 710	19, 480	20, 300	21, 180	22, 120	5
6	18, 530	18, 560	18, 600	18, 640	18, 680	18, 720	18, 760	18, 790	18, 830	18, 870	18, 910	19, 130	19, 510	19, 990	20, 550	21, 190	21, 900	22, 670	23, 510	24, 390	25, 330	6
7	21, 940	21, 990	22, 030	22, 070	22, 120	22, 160	22, 200	22, 250	22, 290	22, 330	22, 380	22, 610	22, 990	23, 470	24, 050	24, 690	25, 400	26, 180	27, 020	27, 910	28, 860	7
8	25, 250	25, 300	25, 350	25, 400	25, 450	25, 500	25, 550	25, 600	25, 650	25, 700	25, 750	25, 980	26, 370	26, 870	27, 440	28, 090	28, 810	29, 600	30, 440	31, 340	32, 290	8
9	28, 800	28, 850	28, 910	28, 970	29, 020	29, 080	29, 140	29, 200	29, 250	29, 310	29, 370	29, 610	30, 000	30, 500	31, 090	31, 750	32, 470	33, 260	34, 110	35, 020	35, 980	9
10	32, 310	32, 380	32, 440	32, 510	32, 570	32, 630	32, 700	32, 760	32, 830	32, 890	32, 950	33, 200	33, 600	34, 110	34, 700	35, 370	36, 100	36, 900	37, 750	38, 660	39, 630	10
11	35, 810	35, 890	35, 960	36, 030	36, 100	36, 170	36, 240	36, 310	36, 380	36, 450	36, 520	36, 780	37, 190	37, 700	38, 300	38, 970	39, 710	40, 510	41, 370	42, 290	43, 260	11
12	39, 880	39, 960	40, 030	40, 110	40, 190	40, 260	40, 340	40, 410	40, 490	40, 560	40, 640	40, 900	41, 310	41, 830	42, 430	43, 110	43, 850	44, 660	45, 520	46, 450	47, 420	12
13	44, 030	44, 110	44, 190	44, 270	44, 350	44, 440	44, 520	44, 600	44, 680	44, 760	44, 840	45, 100	45, 520	46, 040	46, 650	47, 330	48, 070	48, 880	49, 750	50, 680	51, 660	13
14	48, 210	48, 300	48, 390	48, 480	48, 560	48, 650	48, 730	48, 820	48, 900	48, 990	49, 070	49, 340	49, 760	50, 290	50, 900	51, 590	52, 340	53, 150	54, 030	54, 960	55, 940	14
15	52, 520	52, 610	52, 710	52, 800	52, 890	52, 980	53, 070	53, 160	53, 250	53, 340	53, 430	53, 710	54, 130	54, 670	55, 280	55, 970	56, 730	57, 550	58, 430	59, 360	60, 350	15
16	56, 840	56, 940	57, 040	57, 130	57, 230	57, 330	57, 420	57, 520	57, 610	57, 700	57, 800	58, 070	58, 500	59, 040	59, 660	60, 350	61, 110	61, 930	62, 810	63, 750	64, 740	16
17	62, 580	62, 680	62, 780	62, 880	62, 980	63, 080	63, 180	63, 280	63, 380	63, 480	63, 570	63, 850	64, 290	64, 830	65, 450	66, 140	66, 910	67, 730	68, 620	69, 560	70, 550	17
18	68, 310	68, 420	68, 530	68, 630	68, 740	68, 840	68, 950	69, 050	69, 150	69, 250	69, 350	69, 630	70, 070	70, 610	71, 240	71, 940	72, 700	73, 530	74, 420	75, 360	76, 360	18
19	74, 050	74, 160	74, 270	74, 380	74, 490	74, 600	74, 710	74, 810	74, 920	75, 020	75, 130	75, 420	75, 860	76, 400	77, 030	77, 730	78, 500	79, 330	80, 220	81, 170	82, 170	19
20	79, 250	79, 380	79, 500	79, 620	79, 740	79, 870	79, 990	80, 110	80, 230	80, 340	80, 460	80, 760	81, 220	81, 780	82, 420	83, 140	83, 920	84, 770	85, 680	86, 640	87, 650	20
21	84, 450	84, 590	84, 730	84, 860	85, 000	85, 130	85, 270	85, 400	85, 530	85, 670	85, 800	86, 110	86, 580	87, 160	87, 810	88, 550	89, 350	90, 210	91, 130	92, 110	93, 140	21
22	89, 660	89, 810	89, 960	90, 100	90, 250	90, 400	90, 550	90, 690	90, 840	90, 990	91, 130	91, 460	91, 950	92, 530	93, 210	93, 950	94, 770	95, 650	96, 580	97, 580	98, 620	22
23	95, 150	95, 290	95, 440	95, 580	95, 720	95, 860	96, 000	96, 140	96, 280	96, 420	96, 560	96, 890	97, 370	97, 950	98, 610	99, 350	100, 200	101, 000	102, 000	102, 900	104, 000	23
24	100, 600	100, 800	100, 900	101, 100	101, 200	101, 300	101, 500	101, 600	101, 700	101, 900	102, 000	102, 300	102, 800	103, 400	104, 000	104, 700	105, 500	106, 400	107, 300	108, 300	109, 300	24
25	106, 100	106, 300	106, 400	106, 500	106, 700	106, 800	106, 900	107, 000	107, 200	107, 300	107, 400	107, 700	108, 200	108, 800	109, 400	110, 100	110, 900	111, 800	112, 700	113, 700	114, 700	25
26	111, 000	111, 100	111, 200	111, 300	111, 400	111, 500	111, 600	111, 700	111, 800	111, 800	111, 900	112, 200	112, 600	113, 200	113, 800	114, 500	115, 200	116, 000	116, 900	117, 900	118, 800	26
27	115, 900	116, 000	116, 000	116, 100	116, 100	116, 200	116, 200	116, 300	116, 300	116, 400	116, 400	116, 700	117, 100	117, 600	118, 100	118, 800	119, 500	120, 300	121, 100	122, 000	123, 000	27
28	120, 800	120, 800	120, 900	120, 900	120, 900	120, 900	120, 900	120, 900	120, 900	120, 900	120, 900	121, 100	121, 500	121, 900	122, 500	123, 100	123, 800	124, 500	125, 300	126, 200	127, 100	28

HEADWATER ELEVATION

GATE ARRANGEMENT	818.0	818.1	818.2	818.3	818.4	818.5	818.6	818.7	818.8	818.9	819.0	819.1	819.2	819.3	819.4	819.5	819.6	819.7	819.8	819.9	820.0	GATE ARRANGEMENT
1																						1
2																						2
3																						3
4																						4
5	22, 120	23, 100	24, 140	25, 230	26, 360																	5
6	25, 330	26, 330	27, 370	28, 460	29, 600	30, 790	32, 020	33, 290	34, 610	35, 970	37, 380	38, 820										6
7	28, 860	29, 850	30, 900	32, 000	33, 140	34, 330	35, 570	36, 850	38, 170	39, 540	40, 950	42, 400	43, 890	45, 420	46, 990	48, 590	50, 240	51, 930	53, 650			7
8	32, 290	33, 290	34, 350	35, 450	36, 600	37, 800	39, 040	40, 330	41, 660	43, 030	44, 440	45, 900	47, 400	48, 930	50, 510	52, 120	53, 770	55, 470	57, 190	58, 960	60, 760	8
9	35, 980	36, 990	38, 050	39, 160	40, 320	41, 520	42, 770	44, 060	45, 400	46, 780	48, 200	49, 660	51, 170	52, 710	54, 290	55, 910	57, 570	59, 270	61, 010	62, 780	64, 590	9
10	39, 630	40, 650	41, 720	42, 830	44, 000	45, 210	46, 460	47, 760	49, 110	50, 490	51, 920	53, 390	54, 900	56, 450	58, 030	59, 660	61, 330	63, 030	64, 770	66, 550	68, 370	10
11	43, 260	44, 290	45, 360	46, 480	47, 660	48, 870	50, 130	51, 440	52, 790	54, 180	55, 610	57, 090	58, 600	60, 160	61, 750	63, 390	65, 060	66, 770	68, 520	70, 300	72, 120	11
12	47, 420	48, 450	49, 530	50, 660	51, 830	53, 050	54, 320	55, 620	56, 980	58, 370	59, 810	61, 290	62, 810	64, 360	65, 960	67, 600	69, 280	70, 990	72, 740	74, 530	76, 350	12
13	51, 660	52, 690	53, 770	54, 900	56, 080	57, 310	58, 570	59, 890	61, 240	62, 640	64, 080	65, 560	67, 080	68, 650	70, 250	71, 890	73, 560	75, 280	77, 030	78, 830	80, 650	13
14	55, 940	56, 980	58, 070	59, 200	60, 380	61, 610	62, 880	64, 200	65, 560	66, 960	68, 410	69, 890	71, 420	72, 990	74, 590	76, 240	77, 920	79, 640	81, 400	83, 190	85, 020	14
15	60, 350	61, 390	62, 480	63, 620	64, 810	66, 040	67, 320	68, 640	70, 000	71, 410	72, 860	74, 350	75, 880	77, 450	79, 060	80, 710	82, 390	84, 120	85, 880	87, 680	89, 510	15
16	64, 740	65, 790	66, 880	68, 020	69, 210	70, 440	71, 720	73, 040	74, 410	75, 820	77, 270	78, 760	80, 290	81, 860	83, 470	85, 120	86, 810	88, 540	90, 300	92, 100	93, 940	16
17	70, 550	71, 600	72, 690	73, 840	75, 030	76, 260	77, 540	78, 870	80, 240	81, 650	83, 100	84, 590	86, 120	87, 700	89, 310	90, 960	92, 650	94, 380	96, 140	97, 940	99, 780	17
18	76, 360	77, 410	78, 500	79, 650	80, 840	82, 080	83, 360	84, 690	86, 060	87, 470	88, 930	90, 420	91, 960	93, 530	95, 140	96, 800	98, 490	100, 200	102, 000	103, 800	105, 600	18
19	82, 170	83, 220	84, 320	85, 470	86, 660	87, 900	89, 190	90, 520	91, 890	93, 300	94, 760	96, 250	97, 790	99, 370	101, 000	102, 600	104, 300	106, 100	107, 800	109, 600	111, 500	19
20	87, 650	88, 720	89, 830	91, 000	92, 210	93, 470	94, 770	96, 110	97, 500	98, 930	100, 400	101, 900	103, 500	105, 100	106, 700	108, 400	110, 100	111, 800	113, 600	115, 400	117, 300	20
21	93, 140	94, 220	95, 350	96, 530	97, 760	99, 030	100, 400	101, 700	103, 100	104, 600	106, 100	107, 600	109, 200	110, 800	112, 400	114, 100	115, 800	117, 600	119, 400	121, 200	123, 100	21
22	98, 620	99, 720	100, 900	102, 100	103, 300	104, 600	105, 900	107, 300	108, 700	110, 200	111, 700	113, 300	114, 800	116, 500	118, 100	119, 800	121, 600	123, 400	125, 200	127, 000	128, 900	22
23	104, 000	105, 100	106, 200	107, 500	108, 700	110, 000	111, 300	112, 700	114, 200	115, 600	117, 100	118, 700	120, 300	121, 900	123, 600	125, 300	127, 100	128, 900	130, 700	132, 500	134, 400	23
24	109, 300	110, 500	111, 600	112, 800	114, 100	115, 400	116, 800	118, 100	119, 600	121, 100	122, 600	124, 100	125, 800	127, 400	129, 100	130, 800	132, 600	134, 300	136, 200	138, 100	140, 000	24
25	114, 700	115, 800	117, 000	118, 200	119, 500	120, 800	122, 200	123, 600	125, 000	126, 500	128, 000	129, 600	131, 200	132, 900	134, 500	136, 300	138, 000	139, 800	141, 700	143, 600	145, 500	25
26	118, 800	120, 000	121, 200	122, 400	123, 700	125, 000	126, 400	127, 800	129, 300	130, 800	132, 300	133, 900	135, 500	137, 200	138, 900	140, 600	142, 400	144, 200	146, 100	148, 000	149, 900	26
27	123, 000	124, 100	125, 300	126, 600	127, 900	129, 200	130, 600	132, 000	133, 500	135, 000	136, 600	138, 200	139, 800	141, 500	143, 200	145, 000	146, 800	148, 600	150, 500	152, 400	154, 300	27
28	127, 100	128, 300	129, 500	130, 800	132, 100	133, 400	134, 800	136, 300	137, 800	139, 300	140, 900	142, 500	144, 100	145, 800	147, 500	149, 300	151, 100	153, 000	154, 800	156, 800	158, 700	28

HEADWATER 816 to 820
TAILWATER 789.51 to 790.5

See special instruction for preventing gate overflow on page 2.

MAY 2008

TELLICO DAM
SPILLWAY DISCHARGE
IN CUBIC FEET PER SECOND

HEADWATER ELEVATION

GATE ARRANGEMENT	800.0	800.1	800.2	800.3	800.4	800.5	800.6	800.7	800.8	800.9	801.0	801.1	801.2	801.3	801.4	801.5	801.6	801.7	801.8	801.9	802.0	GATE ARRANGEMENT
1	1,560	1,570	1,580	1,590	1,600	1,610	1,620	1,620	1,630	1,640	1,650	1,660	1,670	1,670	1,680	1,690	1,700	1,710	1,710	1,720	1,730	1
2	3,360	3,380	3,400	3,420	3,440	3,460	3,480	3,490	3,510	3,530	3,550	3,560	3,580	3,600	3,620	3,630	3,650	3,670	3,690	3,700	3,720	2
3	5,190	5,220	5,250	5,280	5,310	5,330	5,360	5,390	5,420	5,440	5,470	5,500	5,530	5,550	5,580	5,610	5,630	5,660	5,690	5,710	5,740	3
4	7,060	7,100	7,140	7,170	7,210	7,250	7,290	7,320	7,360	7,400	7,440	7,470	7,510	7,550	7,580	7,620	7,660	7,690	7,730	7,760	7,800	4
5	9,070	9,110	9,160	9,200	9,250	9,290	9,340	9,380	9,430	9,470	9,520	9,560	9,610	9,660	9,700	9,750	9,790	9,840	9,880	9,930	9,970	5
6	10,910	10,960	11,020	11,070	11,120	11,180	11,230	11,280	11,340	11,390	11,440	11,500	11,550	11,600	11,660	11,710	11,760	11,820	11,870	11,920	11,980	6
7	12,870	12,940	13,010	13,070	13,140	13,210	13,270	13,340	13,410	13,470	13,540	13,610	13,680	13,740	13,810	13,880	13,940	14,010	14,070	14,140	14,210	7
8	14,770	14,850	14,930	15,010	15,090	15,170	15,250	15,330	15,410	15,500	15,580	15,660	15,740	15,820	15,900	15,980	16,060	16,140	16,220	16,300	16,380	8
9	16,880	16,970	17,060	17,150	17,230	17,320	17,410	17,500	17,590	17,680	17,770	17,860	17,950	18,040	18,130	18,220	18,310	18,400	18,490	18,570	18,660	9
10	18,960	19,060	19,160	19,260	19,360	19,450	19,550	19,650	19,750	19,850	19,940	20,040	20,140	20,240	20,340	20,430	20,530	20,630	20,730	20,830	20,920	10
11	21,060	21,170	21,270	21,380	21,480	21,590	21,690	21,800	21,900	22,010	22,110	22,220	22,320	22,430	22,530	22,640	22,740	22,850	22,960	23,060	23,160	11
12	23,730	23,850	23,960	24,080	24,190	24,310	24,420	24,540	24,650	24,770	24,880	25,000	25,110	25,230	25,340	25,460	25,570	25,690	25,800	25,920	26,030	12
13	26,510	26,630	26,750	26,880	27,000	27,120	27,250	27,370	27,490	27,620	27,740	27,870	27,990	28,110	28,240	28,360	28,480	28,610	28,730	28,850	28,980	13
14	29,330	29,460	29,600	29,730	29,860	30,000	30,130	30,270	30,400	30,540	30,670	30,810	30,940	31,070	31,210	31,340	31,470	31,610	31,740	31,870	32,010	14
15	32,240	32,390	32,530	32,670	32,820	32,960	33,110	33,250	33,390	33,540	33,680	33,820	33,970	34,110	34,260	34,400	34,540	34,680	34,830	34,970	35,110	15
16	35,190	35,340	35,490	35,650	35,800	35,950	36,110	36,260	36,410	36,570	36,720	36,870	37,030	37,180	37,330	37,480	37,640	37,790	37,940	38,090	38,240	16
17	41,190	41,320	41,450	41,590	41,720	41,850	41,980	42,120	42,250	42,380	42,510	42,640	42,770	42,900	43,030	43,160	43,290	43,420	43,550	43,680	43,820	17
18	47,190	47,300	47,420	47,530	47,640	47,750	47,860	47,970	48,080	48,190	48,300	48,410	48,520	48,630	48,740	48,840	48,950	49,060	49,170	49,280	49,390	18
19	53,190	53,290	53,380	53,470	53,560	53,650	53,740	53,830	53,920	54,000	54,090	54,180	54,260	54,350	54,440	54,520	54,610	54,700	54,790	54,870	54,960	19
20	54,320	54,520	54,710	54,900	55,090	55,280	55,470	55,660	55,850	56,040	56,230	56,420	56,610	56,800	56,990	57,180	57,370	57,560	57,750	57,940	58,130	20
21	55,450	55,750	56,040	56,330	56,620	56,920	57,210	57,500	57,790	58,080	58,380	58,670	58,960	59,250	59,540	59,830	60,130	60,420	60,710	61,000	61,300	21
22	56,580	56,980	57,370	57,760	58,160	58,550	58,940	59,340	59,730	60,130	60,520	60,910	61,310	61,700	62,100	62,490	62,880	63,280	63,670	64,070	64,460	22
23	56,580	56,980	57,370	57,760	58,160	58,550	58,940	59,340	59,730	60,130	60,520	60,910	61,310	61,700	62,100	62,490	62,880	63,280	63,670	64,070	64,460	23
24	56,580	56,980	57,370	57,760	58,160	58,550	58,940	59,340	59,730	60,130	60,520	60,910	61,310	61,700	62,100	62,490	62,880	63,280	63,670	64,070	64,460	24
25	56,580	56,980	57,370	57,760	58,160	58,550	58,940	59,340	59,730	60,130	60,520	60,910	61,310	61,700	62,100	62,490	62,880	63,280	63,670	64,070	64,460	25
26	56,580	56,980	57,370	57,760	58,160	58,550	58,940	59,340	59,730	60,130	60,520	60,910	61,310	61,700	62,100	62,490	62,880	63,280	63,670	64,070	64,460	26
27	56,580	56,980	57,370	57,760	58,160	58,550	58,940	59,340	59,730	60,130	60,520	60,910	61,310	61,700	62,100	62,490	62,880	63,280	63,670	64,070	64,460	27
28	56,580	56,980	57,370	57,760	58,160	58,550	58,940	59,340	59,730	60,130	60,520	60,910	61,310	61,700	62,100	62,490	62,880	63,280	63,670	64,070	64,460	28

HEADWATER ELEVATION

GATE ARRANGEMENT	802.0	802.1	802.2	802.3	802.4	802.5	802.6	802.7	802.8	802.9	803.0	803.1	803.2	803.3	803.4	803.5	803.6	803.7	803.8	803.9	804.0	GATE ARRANGEMENT
1	1,730	1,740	1,750	1,750	1,760	1,770	1,780	1,780	1,790	1,800	1,810	1,810	1,820	1,830	1,840	1,840	1,850	1,860	1,870	1,870	1,880	1
2	3,720	3,740	3,750	3,770	3,790	3,800	3,820	3,840	3,850	3,870	3,890	3,900	3,920	3,930	3,950	3,970	3,980	4,000	4,010	4,030	4,040	2
3	5,740	5,770	5,790	5,820	5,840	5,870	5,890	5,920	5,940	5,970	5,990	6,020	6,040	6,070	6,090	6,120	6,140	6,170	6,190	6,210	6,240	3
4	7,800	7,840	7,870	7,910	7,940	7,980	8,010	8,050	8,080	8,120	8,150	8,190	8,220	8,260	8,290	8,320	8,360	8,390	8,420	8,460	8,490	4
5	9,970	10,020	10,060	10,110	10,150	10,200	10,240	10,280	10,330	10,370	10,420	10,460	10,510	10,550	10,590	10,640	10,680	10,720	10,770	10,810	10,850	5
6	11,980	12,030	12,080	12,140	12,190	12,240	12,300	12,350	12,400	12,450	12,500	12,560	12,610	12,660	12,710	12,760	12,810	12,870	12,920	12,970	13,020	6
7	14,210	14,270	14,340	14,400	14,470	14,530	14,600	14,660	14,730	14,790	14,860	14,920	14,980	15,050	15,110	15,170	15,240	15,300	15,360	15,420	15,480	7
8	16,380	16,460	16,540	16,620	16,700	16,770	16,850	16,930	17,010	17,080	17,160	17,240	17,310	17,390	17,460	17,530	17,610	17,680	17,750	17,820	17,890	8
9	18,660	18,750	18,840	18,930	19,010	19,100	19,190	19,270	19,360	19,450	19,530	19,620	19,700	19,780	19,870	19,950	20,030	20,110	20,200	20,280	20,360	9
10	20,920	21,020	21,120	21,210	21,310	21,410	21,500	21,600	21,690	21,790	21,880	21,970	22,070	22,160	22,250	22,350	22,440	22,530	22,620	22,710	22,800	10
11	23,160	23,270	23,370	23,480	23,580	23,690	23,790	23,890	23,990	24,100	24,200	24,300	24,400	24,500	24,610	24,710	24,810	24,910	25,000	25,100	25,200	11
12	26,030	26,140	26,260	26,370	26,490	26,600	26,710	26,820	26,940	27,050	27,160	27,270	27,380	27,490	27,600	27,710	27,820	27,930	28,040	28,140	28,250	12
13	28,980	29,100	29,220	29,340	29,470	29,590	29,710	29,830	29,950	30,070	30,190	30,310	30,430	30,550	30,670	30,790	30,910	31,020	31,140	31,260	31,370	13
14	32,010	32,140	32,270	32,400	32,540	32,670	32,800	32,930	33,060	33,190	33,320	33,450	33,580	33,710	33,830	33,960	34,090	34,210	34,340	34,460	34,590	14
15	35,110	35,250	35,400	35,540	35,680	35,820	35,960	36,100	36,240	36,380	36,520	36,650	36,790	36,930	37,070	37,200	37,340	37,470	37,610	37,740	37,870	15
16	38,240	38,390	38,540	38,690	38,840	38,990	39,140	39,290	39,440	39,590	39,740	39,880	40,030	40,180	40,320	40,470	40,610	40,750	40,900	41,040	41,180	16
17	43,820	43,950	44,080	44,210	44,340	44,470	44,600	44,730	44,860	44,990	45,120	45,250	45,380	45,520	45,650	45,780	45,910	46,050	46,180	46,310	46,450	17
18	49,390	49,500	49,610	49,720	49,830	49,940	50,050	50,170	50,280	50,390	50,510	50,620	50,740	50,860	50,970	51,090	51,210	51,340	51,460	51,580	51,710	18
19	54,960	55,050	55,140	55,230	55,320	55,410	55,510	55,600	55,700	55,790	55,890	55,990	56,090	56,200	56,300	56,410	56,520	56,630	56,740	56,860	56,970	19
20	58,130	58,320	58,510	58,700	58,900	59,090	59,290	59,480	59,680	59,870	60,070	60,270	60,470	60,670	60,880	61,080	61,290	61,490	61,700	61,910	62,120	20
21	61,300	61,590	61,880	62,180	62,470	62,770	63,060	63,360	63,660	63,950	64,250	64,550	64,850	65,150	65,450	65,750	66,060	66,360	66,660	66,970	67,280	21
22	64,460	64,860	65,260	65,650	66,050	66,440	66,840	67,240	67,630	68,030	68,430	68,830	69,230	69,630	70,020	70,420	70,820	71,220	71,620	72,030	72,430	22
23	64,460	64,860	65,260	65,650	66,050	66,440	66,840	67,240	67,630	68,030	68,430	68,830	69,230	69,630	70,020	70,420	70,820	71,220	71,620	72,030	72,430	23
24	64,460	64,860	65,260	65,650	66,050	66,440	66,840	67,240	67,630	68,030	68,430	68,830	69,230	69,630	70,020	70,420	70,820	71,220	71,620	72,030	72,430	24
25	64,460	64,860	65,260	65,650	66,050	66,440	66,840	67,240	67,630	68,030	68,430	68,830	69,230	69,630	70,020	70,420	70,820	71,220	71,620	72,030	72,430	25
26	64,460	64,860	65,260	65,650	66,050	66,440	66,840	67,240	67,630	68,030	68,430	68,830	69,230	69,630	70,020	70,420	70,820	71,220	71,620	72,030	72,430	26
27	64,460	64,860	65,260	65,650	66,050	66,440	66,840	67,240	67,630	68,030	68,430	68,830	69,230	69,630	70,020	70,420	70,820	71,220	71,620	72,030	72,430	27
28	64,460	64,860	65,260	65,650	66,050	66,440	66,840	67,240	67,630	68,030	68,430	68,830	69,230	69,630	70,020	70,420	70,820	71,220	71,620	72,030	72,430	28

MAY 2008

HEADWATER 800 to 804
TAILWATER 790.51 to 791.5

TELLICO DAM
SPILLWAY DISCHARGE
IN CUBIC FEET PER SECOND

HEADWATER ELEVATION

GATE ARRANGEMENT	804.0	804.1	804.2	804.3	804.4	804.5	804.6	804.7	804.8	804.9	805.0	805.1	805.2	805.3	805.4	805.5	805.6	805.7	805.8	805.9	806.0	GATE ARRANGEMENT
1	1,880	1,890	1,890	1,900	1,910	1,920	1,920	1,930	1,940	1,940	1,950	1,960	1,970	1,970	1,980	1,990	1,990	2,000	2,010	2,010	2,020	1
2	4,040	4,060	4,080	4,090	4,110	4,120	4,140	4,150	4,170	4,180	4,200	4,210	4,230	4,240	4,260	4,270	4,290	4,300	4,310	4,330	4,340	2
3	6,240	6,260	6,290	6,310	6,330	6,360	6,380	6,400	6,430	6,450	6,470	6,500	6,520	6,540	6,570	6,590	6,610	6,630	6,660	6,680	6,700	3
4	8,490	8,520	8,560	8,590	8,620	8,660	8,690	8,720	8,750	8,790	8,820	8,850	8,880	8,920	8,950	8,980	9,010	9,040	9,070	9,100	9,140	4
5	10,850	10,900	10,940	10,980	11,020	11,070	11,110	11,150	11,190	11,230	11,270	11,320	11,360	11,400	11,440	11,480	11,520	11,560	11,600	11,640	11,680	5
6	13,020	13,070	13,120	13,170	13,220	13,260	13,310	13,360	13,410	13,460	13,510	13,550	13,600	13,650	13,700	13,740	13,790	13,840	13,880	13,930	13,980	6
7	15,480	15,540	15,600	15,660	15,720	15,780	15,830	15,890	15,950	16,010	16,060	16,120	16,180	16,230	16,290	16,340	16,400	16,450	16,510	16,560	16,610	7
8	17,890	17,960	18,030	18,100	18,170	18,240	18,310	18,370	18,440	18,500	18,570	18,630	18,700	18,760	18,820	18,880	18,950	19,010	19,070	19,130	19,190	8
9	20,360	20,440	20,510	20,590	20,670	20,750	20,820	20,900	20,970	21,050	21,120	21,200	21,270	21,340	21,410	21,480	21,560	21,630	21,700	21,770	21,840	9
10	22,800	22,890	22,970	23,060	23,150	23,240	23,320	23,410	23,490	23,580	23,660	23,740	23,820	23,910	23,990	24,070	24,150	24,230	24,310	24,390	24,470	10
11	25,200	25,300	25,400	25,490	25,590	25,680	25,780	25,870	25,970	26,060	26,150	26,250	26,340	26,430	26,520	26,610	26,700	26,790	26,880	26,970	27,060	11
12	28,250	28,360	28,460	28,570	28,670	28,780	28,880	28,980	29,080	29,190	29,290	29,390	29,490	29,590	29,690	29,790	29,890	29,980	30,080	30,180	30,280	12
13	31,370	31,490	31,600	31,720	31,830	31,940	32,060	32,170	32,280	32,390	32,500	32,610	32,720	32,830	32,940	33,050	33,160	33,260	33,370	33,480	33,580	13
14	34,590	34,710	34,830	34,950	35,080	35,200	35,320	35,440	35,550	35,670	35,790	35,910	36,020	36,140	36,260	36,370	36,490	36,600	36,710	36,830	36,940	14
15	37,870	38,010	38,140	38,270	38,400	38,530	38,660	38,790	38,920	39,040	39,170	39,300	39,420	39,550	39,670	39,800	39,920	40,040	40,170	40,290	40,410	15
16	41,180	41,320	41,460	41,600	41,740	41,880	42,020	42,150	42,290	42,430	42,560	42,700	42,830	42,970	43,100	43,230	43,360	43,500	43,630	43,760	43,890	16
17	46,450	46,580	46,710	46,850	46,980	47,120	47,250	47,390	47,530	47,660	47,800	47,940	48,070	48,210	48,350	48,490	48,620	48,760	48,900	49,040	49,180	17
18	51,710	51,840	51,960	52,090	52,230	52,360	52,490	52,630	52,760	52,900	53,040	53,180	53,320	53,460	53,600	53,740	53,880	54,030	54,170	54,320	54,460	18
19	56,970	57,090	57,220	57,340	57,470	57,600	57,730	57,860	58,000	58,130	58,270	58,410	58,560	58,700	58,850	59,000	59,140	59,290	59,450	59,600	59,750	19
20	62,120	62,340	62,550	62,770	62,990	63,210	63,430	63,550	63,670	63,790	63,910	64,030	64,150	64,270	64,390	64,510	64,630	64,760	64,880	65,010	65,130	20
21	67,280	67,580	67,890	68,200	68,510	68,820	69,140	69,240	69,340	69,440	69,540	69,640	69,740	69,830	69,930	70,030	70,130	70,220	70,320	70,410	70,510	21
22	72,430	72,830	73,230	73,630	74,040	74,440	74,840	74,930	75,010	75,090	75,170	75,250	75,330	75,400	75,470	75,550	75,620	75,690	75,750	75,820	75,890	22
23	72,430	72,830	73,230	73,630	74,040	74,440	74,840	75,040	75,220	75,410	75,600	75,790	75,970	76,160	76,340	76,530	76,710	76,890	77,070	77,250	77,430	23
24	72,430	72,830	73,230	73,630	74,040	74,440	74,840	75,140	75,440	75,730	76,030	76,330	76,620	76,920	77,210	77,510	77,800	78,100	78,390	78,690	78,980	24
25	72,430	72,830	73,230	73,630	74,040	74,440	74,840	75,250	75,650	76,050	76,460	76,860	77,270	77,680	78,080	78,490	78,900	79,300	79,710	80,120	80,530	25
26	72,430	72,830	73,230	73,630	74,040	74,440	74,840	75,250	75,650	76,050	76,460	76,860	77,270	77,680	78,080	78,490	78,900	79,300	79,710	80,120	80,530	26
27	72,430	72,830	73,230	73,630	74,040	74,440	74,840	75,250	75,650	76,050	76,460	76,860	77,270	77,680	78,080	78,490	78,900	79,300	79,710	80,120	80,530	27
28	72,430	72,830	73,230	73,630	74,040	74,440	74,840	75,250	75,650	76,050	76,460	76,860	77,270	77,680	78,080	78,490	78,900	79,300	79,710	80,120	80,530	28

HEADWATER ELEVATION

GATE ARRANGEMENT	806.0	806.1	806.2	806.3	806.4	806.5	806.6	806.7	806.8	806.9	807.0	807.1	807.2	807.3	807.4	807.5	807.6	807.7	807.8	807.9	808.0	GATE ARRANGEMENT
1	2,020	2,030	2,030	2,040	2,050	2,050	2,060	2,070	2,070	2,080	2,090	2,090	2,100	2,110	2,110	2,120	2,120	2,130	2,140	2,140	2,150	1
2	4,340	4,360	4,370	4,390	4,400	4,420	4,430	4,440	4,460	4,470	4,490	4,500	4,510	4,530	4,540	4,560	4,570	4,580	4,600	4,610	4,620	2
3	6,700	6,720	6,750	6,770	6,790	6,810	6,830	6,860	6,880	6,900	6,920	6,940	6,960	6,990	7,010	7,030	7,050	7,070	7,090	7,110	7,130	3
4	9,140	9,170	9,200	9,230	9,260	9,290	9,320	9,350	9,380	9,410	9,440	9,470	9,500	9,530	9,560	9,590	9,620	9,650	9,680	9,710	9,740	4
5	11,680	11,720	11,760	11,800	11,840	11,880	11,910	11,950	11,990	12,030	12,070	12,110	12,150	12,180	12,220	12,260	12,300	12,340	12,370	12,410	12,450	5
6	13,980	14,020	14,070	14,110	14,160	14,210	14,250	14,300	14,340	14,390	14,430	14,480	14,520	14,570	14,610	14,650	14,700	14,740	14,790	14,830	14,880	6
7	16,610	16,670	16,720	16,770	16,830	16,880	16,930	16,980	17,040	17,090	17,140	17,190	17,240	17,300	17,350	17,400	17,450	17,500	17,550	17,600	17,660	7
8	19,190	19,250	19,310	19,370	19,430	19,490	19,550	19,600	19,660	19,720	19,780	19,840	19,890	19,950	20,010	20,070	20,130	20,180	20,240	20,300	20,360	8
9	21,840	21,910	21,970	22,040	22,110	22,180	22,250	22,310	22,380	22,450	22,520	22,580	22,650	22,720	22,780	22,850	22,910	22,980	23,050	23,110	23,180	9
10	24,470	24,550	24,630	24,700	24,780	24,860	24,940	25,010	25,090	25,160	25,240	25,320	25,390	25,470	25,540	25,620	25,690	25,760	25,840	25,910	25,980	10
11	27,060	27,150	27,240	27,320	27,410	27,500	27,580	27,670	27,760	27,840	27,930	28,010	28,090	28,180	28,260	28,340	28,430	28,510	28,590	28,670	28,750	11
12	30,280	30,370	30,470	30,560	30,660	30,750	30,850	30,940	31,030	31,130	31,220	31,310	31,400	31,500	31,590	31,680	31,770	31,860	31,950	32,040	32,130	12
13	33,580	33,690	33,790	33,900	34,000	34,110	34,210	34,310	34,420	34,520	34,620	34,720	34,820	34,930	35,030	35,130	35,230	35,330	35,430	35,520	35,620	13
14	36,940	37,050	37,170	37,280	37,390	37,500	37,610	37,720	37,830	37,940	38,050	38,160	38,270	38,380	38,490	38,600	38,710	38,810	38,920	39,030	39,140	14
15	40,410	40,530	40,650	40,780	40,900	41,020	41,140	41,250	41,370	41,490	41,610	41,730	41,850	41,970	42,080	42,200	42,320	42,430	42,550	42,670	42,780	15
16	43,890	44,020	44,150	44,280	44,410	44,540	44,660	44,790	44,920	45,050	45,170	45,300	45,430	45,550	45,680	45,810	45,930	46,060	46,180	46,310	46,440	16
17	49,180	49,310	49,450	49,590	49,730	49,870	50,010	50,140	50,280	50,420	50,560	50,700	50,830	50,970	51,110	51,240	51,380	51,520	51,650	51,790	51,930	17
18	54,460	54,610	54,760	54,900	55,050	55,200	55,350	55,500	55,640	55,790	55,940	56,090	56,240	56,390	56,530	56,680	56,830	56,980	57,120	57,270	57,420	18
19	59,750	59,910	60,060	60,220	60,370	60,530	60,690	60,850	61,010	61,170	61,320	61,480	61,640	61,800	61,960	62,120	62,280	62,440	62,590	62,750	62,910	19
20	65,130	65,270	65,400	65,540	65,680	65,810	65,950	66,090	66,220	66,360	66,500	66,630	66,770	66,900	67,040	67,170	67,310	67,440	67,570	67,700	67,830	20
21	70,510	70,630	70,740	70,860	70,980	71,090	71,210	71,320	71,440	71,550	71,670	71,780	71,890	72,000	72,110	72,220	72,330	72,440	72,550	72,650	72,760	21
22	75,890	75,990	76,080	76,180	76,280	76,380	76,470	76,560	76,660	76,750	76,840	76,930	77,020	77,100	77,190	77,270	77,360	77,440	77,520	77,600	77,680	22
23	77,430	77,640	77,840	78,040	78,240	78,440	78,640	78,840	79,040	79,240	79,440	79,640	79,830	80,030	80,220	80,420	80,610	80,810	81,000	81,190	81,390	23
24	78,980	79,290	79,590	79,900	80,210	80,510	80,820	81,120	81,430	81,730	82,040	82,340	82,650	82,950	83,260	83,560	83,870	84,170	84,480	84,780	85,090	24
25	80,530	80,940	81,350	81,760	82,170	82,580	82,990	83,400	83,810	84,230	84,640	85,050	85,470	85,880	86,290	86,710	87,120	87,540	87,960	88,370	88,790	25
26	80,530	80,940	81,350	81,760	82,170	82,580	82,990	83,400	83,810	84,230	84,640	85,050	85,470	85,880	86,290	86,710	87,120	87,540	87,960	88,370	88,790	26
27	80,530	80,940	81,350	81,760	82,170	82,580	82,990	83,400	83,810	84,230	84,640	85,050	85,470	85,880	86,290	86,710	87,120	87,540	87,960	88,370	88,790	27
28	80,530	80,940	81,350	81,760	82,170	82,580	82,990	83,400	83,810	84,230	84,640	85,050	85,470	85,880	86,290	86,710	87,120	87,540	87,960	88,370	88,790	28

HEADWATER 804 to 808
TAILWATER 790.51 to 791.5

MAY 2008

TELLICO DAM
SPILLWAY DISCHARGE
IN CUBIC FEET PER SECOND

GATE ARRANGEMENT	HEADWATER ELEVATION																				GATE ARRANGEMENT
	808.0	808.1	808.2	808.3	808.4	808.5	808.6	808.7	808.8	808.9	809.0	809.1	809.2	809.3	809.4	809.5	809.6	809.7	809.8	809.9	810.0	
1	2,150	2,160	2,160	2,170	2,180	2,180	2,190	2,190	2,200	2,210	2,210	2,220	2,220	2,230	2,240	2,240	2,250	2,260	2,260	2,270	2,270	1
2	4,620	4,640	4,650	4,670	4,680	4,690	4,710	4,720	4,730	4,750	4,760	4,770	4,780	4,800	4,810	4,820	4,840	4,850	4,860	4,880	4,890	2
3	7,130	7,160	7,180	7,200	7,220	7,240	7,260	7,280	7,300	7,320	7,340	7,360	7,380	7,400	7,420	7,440	7,460	7,480	7,500	7,520	7,540	3
4	9,740	9,770	9,800	9,820	9,850	9,880	9,910	9,940	9,970	10,000	10,020	10,050	10,080	10,110	10,140	10,160	10,190	10,220	10,250	10,280	10,300	4
5	12,450	12,480	12,520	12,560	12,600	12,630	12,670	12,710	12,740	12,780	12,820	12,850	12,890	12,920	12,960	13,000	13,030	13,070	13,100	13,140	13,170	5
6	14,880	14,920	14,960	15,010	15,050	15,100	15,140	15,180	15,230	15,270	15,310	15,360	15,400	15,440	15,490	15,530	15,570	15,620	15,660	15,700	15,740	6
7	17,660	17,710	17,760	17,810	17,860	17,910	17,960	18,020	18,070	18,120	18,170	18,220	18,270	18,320	18,370	18,430	18,480	18,530	18,580	18,630	18,680	7
8	20,360	20,410	20,470	20,530	20,590	20,650	20,700	20,760	20,820	20,880	20,940	20,990	21,050	21,110	21,170	21,230	21,290	21,340	21,400	21,460	21,520	8
9	23,180	23,240	23,310	23,380	23,440	23,510	23,570	23,640	23,710	23,770	23,840	23,900	23,970	24,040	24,100	24,170	24,230	24,300	24,360	24,430	24,490	9
10	25,980	26,060	26,130	26,200	26,280	26,350	26,420	26,500	26,570	26,640	26,710	26,780	26,860	26,930	27,000	27,070	27,140	27,220	27,290	27,360	27,430	10
11	28,750	28,840	28,920	29,000	29,080	29,160	29,240	29,320	29,400	29,480	29,560	29,640	29,710	29,790	29,870	29,950	30,030	30,110	30,180	30,260	30,340	11
12	32,130	32,220	32,310	32,400	32,490	32,570	32,660	32,750	32,840	32,930	33,020	33,100	33,190	33,280	33,360	33,450	33,540	33,620	33,710	33,800	33,880	12
13	35,620	35,720	35,820	35,920	36,010	36,110	36,210	36,310	36,400	36,500	36,590	36,690	36,790	36,880	36,980	37,070	37,170	37,260	37,360	37,450	37,550	13
14	39,140	39,250	39,360	39,460	39,570	39,680	39,790	39,900	40,000	40,110	40,220	40,330	40,430	40,540	40,650	40,750	40,860	40,970	41,070	41,180	41,290	14
15	42,780	42,900	43,020	43,130	43,250	43,370	43,480	43,600	43,710	43,830	43,940	44,060	44,180	44,290	44,410	44,520	44,640	44,750	44,870	44,980	45,090	15
16	46,440	46,560	46,690	46,810	46,940	47,060	47,190	47,310	47,440	47,570	47,690	47,820	47,940	48,070	48,190	48,310	48,440	48,560	48,690	48,810	48,940	16
17	51,930	52,060	52,200	52,330	52,470	52,600	52,730	52,870	53,000	53,130	53,270	53,400	53,530	53,660	53,790	53,930	54,060	54,190	54,320	54,450	54,580	17
18	57,420	57,560	57,710	57,850	57,990	58,140	58,280	58,420	58,560	58,700	58,840	58,980	59,120	59,260	59,400	59,540	59,670	59,810	59,950	60,080	60,220	18
19	62,910	63,060	63,220	63,370	63,520	63,670	63,820	63,970	64,120	64,270	64,420	64,570	64,710	64,860	65,000	65,150	65,290	65,430	65,580	65,720	65,860	19
20	67,830	67,990	68,140	68,300	68,450	68,600	68,750	68,900	69,050	69,200	69,350	69,500	69,650	69,790	69,940	70,080	70,230	70,370	70,520	70,660	70,800	20
21	72,760	72,910	73,070	73,220	73,380	73,530	73,680	73,830	73,980	74,130	74,280	74,430	74,580	74,730	74,880	75,020	75,170	75,310	75,460	75,600	75,750	21
22	77,680	77,840	78,000	78,150	78,300	78,460	78,610	78,760	78,910	79,070	79,220	79,370	79,510	79,660	79,810	79,960	80,110	80,250	80,400	80,540	80,690	22
23	81,390	81,630	81,870	82,110	82,360	82,600	82,840	83,080	83,320	83,560	83,800	84,040	84,280	84,520	84,760	85,000	85,240	85,480	85,720	85,960	86,200	23
24	85,090	85,420	85,750	86,080	86,410	86,740	87,070	87,400	87,730	88,060	88,390	88,720	89,050	89,390	89,720	90,050	90,380	90,710	91,040	91,370	91,710	24
25	88,790	89,210	89,620	90,040	90,460	90,880	91,300	91,720	92,140	92,560	92,980	93,400	93,820	94,250	94,670	95,090	95,520	95,940	96,360	96,790	97,210	25
26	88,790	89,210	89,620	90,040	90,460	90,880	91,300	91,720	92,140	92,560	92,980	93,400	93,820	94,250	94,670	95,090	95,520	95,940	96,360	96,790	97,210	26
27	88,790	89,210	89,620	90,040	90,460	90,880	91,300	91,720	92,140	92,560	92,980	93,400	93,820	94,250	94,670	95,090	95,520	95,940	96,360	96,790	97,210	27
28	88,790	89,210	89,620	90,040	90,460	90,880	91,300	91,720	92,140	92,560	92,980	93,400	93,820	94,250	94,670	95,090	95,520	95,940	96,360	96,790	97,210	28

GATE ARRANGEMENT	HEADWATER ELEVATION																				GATE ARRANGEMENT
	810.0	810.1	810.2	810.3	810.4	810.5	810.6	810.7	810.8	810.9	811.0	811.1	811.2	811.3	811.4	811.5	811.6	811.7	811.8	811.9	812.0	
1	2,270	2,280	2,290	2,290	2,300	2,300	2,310	2,310	2,320	2,330	2,330	2,340	2,340	2,350	2,360	2,360	2,370	2,370	2,380	2,380	2,390	1
2	4,890	4,900	4,910	4,930	4,940	4,950	4,970	4,980	4,990	5,000	5,020	5,030	5,040	5,050	5,070	5,080	5,090	5,100	5,120	5,130	5,140	2
3	7,540	7,560	7,580	7,600	7,620	7,640	7,660	7,680	7,700	7,720	7,740	7,760	7,780	7,800	7,820	7,830	7,850	7,870	7,890	7,910	7,930	3
4	10,300	10,330	10,360	10,380	10,410	10,440	10,470	10,490	10,520	10,550	10,570	10,600	10,630	10,650	10,680	10,710	10,730	10,760	10,780	10,810	10,840	4
5	13,170	13,210	13,240	13,280	13,310	13,350	13,380	13,420	13,450	13,490	13,520	13,560	13,590	13,620	13,660	13,690	13,730	13,760	13,790	13,830	13,860	5
6	15,740	15,790	15,830	15,870	15,910	15,960	16,000	16,040	16,080	16,130	16,170	16,210	16,250	16,290	16,330	16,380	16,420	16,460	16,500	16,540	16,580	6
7	18,680	18,730	18,780	18,830	18,880	18,930	18,980	19,030	19,080	19,130	19,180	19,230	19,280	19,330	19,380	19,430	19,480	19,530	19,580	19,630	19,670	7
8	21,520	21,580	21,640	21,690	21,750	21,810	21,870	21,920	21,980	22,040	22,100	22,150	22,210	22,270	22,330	22,380	22,440	22,490	22,550	22,610	22,660	8
9	24,490	24,560	24,630	24,690	24,760	24,820	24,890	24,950	25,010	25,080	25,140	25,210	25,270	25,340	25,400	25,460	25,530	25,590	25,660	25,720	25,780	9
10	27,430	27,500	27,570	27,640	27,710	27,780	27,860	27,930	28,000	28,070	28,140	28,210	28,280	28,350	28,420	28,490	28,560	28,630	28,700	28,770	28,840	10
11	30,340	30,420	30,490	30,570	30,650	30,720	30,800	30,880	30,960	31,030	31,110	31,190	31,260	31,340	31,420	31,490	31,570	31,650	31,720	31,800	31,880	11
12	33,880	33,970	34,060	34,140	34,230	34,310	34,400	34,490	34,570	34,660	34,740	34,830	34,910	35,000	35,090	35,170	35,260	35,340	35,430	35,510	35,600	12
13	37,550	37,640	37,740	37,830	37,920	38,020	38,110	38,210	38,300	38,390	38,490	38,580	38,680	38,770	38,860	38,960	39,050	39,150	39,240	39,330	39,430	13
14	41,290	41,390	41,500	41,610	41,710	41,820	41,920	42,030	42,130	42,240	42,350	42,450	42,560	42,660	42,760	42,870	42,970	43,080	43,180	43,290	43,390	14
15	45,090	45,210	45,320	45,440	45,550	45,670	45,780	45,890	46,010	46,120	46,230	46,350	46,460	46,570	46,690	46,800	46,910	47,020	47,140	47,250	47,360	15
16	48,940	49,060	49,190	49,310	49,430	49,560	49,680	49,800	49,930	50,050	50,170	50,300	50,420	50,540	50,670	50,790	50,910	51,030	51,160	51,280	51,400	16
17	54,580	54,710	54,840	54,970	55,100	55,220	55,350	55,480	55,610	55,740	55,870	55,990	56,120	56,250	56,380	56,500	56,630	56,760	56,880	57,010	57,140	17
18	60,220	60,350	60,490	60,620	60,760	60,890	61,030	61,160	61,290	61,420	61,560	61,690	61,820	61,950	62,090	62,220	62,350	62,480	62,610	62,740	62,870	18
19	65,860	66,000	66,140	66,280	66,420	66,560	66,700	66,840	66,970	67,110	67,250	67,390	67,520	67,660	67,800	67,930	68,070	68,200	68,340	68,470	68,610	19
20	70,800	70,940	71,090	71,230	71,370	71,510	71,650	71,790	71,930	72,060	72,200	72,340	72,480	72,610	72,750	72,890	73,020	73,160	73,300	73,430	73,570	20
21	75,750	75,890	76,030	76,170	76,320	76,460	76,600	76,740	76,880	77,020	77,160	77,290	77,430	77,570	77,710	77,840	77,980	78,120	78,250	78,390	78,520	21
22	80,690	80,830	80,980	81,120	81,260	81,410	81,550	81,690	81,830	81,970	82,110	82,250	82,390	82,530	82,660	82,800	82,940	83,070	83,210	83,350	83,480	22
23	86,200	86,440	86,670	86,890	87,070	87,240	87,420	87,590	87,760	87,940	88,110	88,280	88,450	88,620	88,790	88,960	89,130	89,300	89,470	89,630	89,800	23
24	91,710	92,040	92,370	92,660	92,870	93,080	93,280	93,490	93,700	93,900	94,110	94,310	94,510	94,720	94,920	95,120	95,320	95,520	95,720	95,920	96,120	24
25	97,210	97,640	98,060	98,430	98,670	98,910	99,150	99,390	99,630	99,870	100,100	100,300	100,600	100,800	101,000	101,300	101,500	101,700	102,000	102,200	102,400	25
26	97,210	97,640	98,060	98,450	98,750	99,060	99,360	99,660	99,960	100,300	100,600	100,900	101,200	101,500	101,800	102,100	102,400	102,700	103,000	103,300	103,600	26
27	97,210	97,640	98,060	98,470	98,840	99,200	99,570	99,930	100,300	100,700	101,000	101,400	101,800	102,100	102,500	102,900	103,200	103,600	103,900	104,300	104,700	27
28	97,210	97,640	98,060	98,490	98,920	99,340	99,770	100,200	100,600	101,100	101,500	101,900	102,300	102,800	103,200	103,600	104,100	104,500	104,900	105,400	105,800	28

MAY 2008

HEADWATER 808 to 812
TAILWATER 790.51 to 791.5

TELLICO DAM
SPILLWAY DISCHARGE
IN CUBIC FEET PER SECOND

GATE ARRANGEMENT	HEADWATER ELEVATION																				GATE ARRANGEMENT
	812.0	812.1	812.2	812.3	812.4	812.5	812.6	812.7	812.8	812.9	813.0	813.1	813.2	813.3	813.4	813.5	813.6	813.7	813.8	813.9	814.0	
1	2,390	2,400	2,400	2,410	2,410	2,420	2,420	2,430	2,430	2,440	2,450	2,450	2,460	2,460	2,470	2,470	2,480	2,480	2,490	2,500	2,500	1
2	5,140	5,150	5,160	5,180	5,190	5,200	5,210	5,220	5,240	5,250	5,260	5,270	5,280	5,300	5,310	5,320	5,330	5,340	5,360	5,370	5,380	2
3	7,930	7,950	7,970	7,990	8,000	8,020	8,040	8,060	8,080	8,100	8,120	8,130	8,150	8,170	8,190	8,210	8,230	8,240	8,260	8,280	8,300	3
4	10,840	10,860	10,890	10,920	10,940	10,970	10,990	11,020	11,040	11,070	11,100	11,120	11,150	11,170	11,200	11,220	11,250	11,270	11,300	11,320	11,350	4
5	13,860	13,890	13,930	13,960	13,990	14,020	14,060	14,090	14,120	14,150	14,190	14,220	14,250	14,280	14,320	14,350	14,380	14,410	14,440	14,480	14,510	5
6	16,580	16,620	16,660	16,700	16,740	16,780	16,820	16,860	16,900	16,940	16,980	17,020	17,060	17,100	17,140	17,180	17,220	17,260	17,300	17,340	17,380	6
7	19,670	19,720	19,770	19,820	19,870	19,910	19,960	20,010	20,060	20,100	20,150	20,200	20,240	20,290	20,340	20,380	20,430	20,470	20,520	20,570	20,610	7
8	22,660	22,720	22,770	22,830	22,880	22,940	22,990	23,050	23,100	23,160	23,210	23,270	23,320	23,370	23,430	23,480	23,530	23,590	23,640	23,690	23,740	8
9	25,780	25,840	25,910	25,970	26,030	26,100	26,160	26,220	26,280	26,340	26,410	26,470	26,530	26,590	26,650	26,710	26,770	26,830	26,890	26,950	27,010	9
10	28,840	28,910	28,980	29,050	29,120	29,190	29,260	29,330	29,400	29,470	29,540	29,610	29,680	29,750	29,820	29,880	29,950	30,020	30,090	30,160	30,230	10
11	31,880	31,960	32,030	32,110	32,190	32,260	32,340	32,420	32,500	32,570	32,650	32,730	32,810	32,880	32,960	33,040	33,120	33,190	33,270	33,350	33,420	11
12	35,600	35,690	35,770	35,860	35,950	36,030	36,120	36,200	36,290	36,380	36,460	36,550	36,630	36,720	36,810	36,890	36,980	37,060	37,150	37,230	37,320	12
13	39,430	39,520	39,620	39,710	39,810	39,900	40,000	40,090	40,190	40,280	40,370	40,470	40,560	40,660	40,750	40,850	40,940	41,040	41,130	41,220	41,320	13
14	43,390	43,490	43,600	43,700	43,800	43,900	44,010	44,110	44,210	44,310	44,410	44,520	44,620	44,720	44,820	44,920	45,020	45,120	45,220	45,320	45,420	14
15	47,360	47,470	47,580	47,700	47,810	47,920	48,030	48,140	48,250	48,360	48,470	48,580	48,690	48,800	48,910	49,020	49,130	49,240	49,350	49,460	49,570	15
16	51,400	51,520	51,640	51,760	51,890	52,010	52,130	52,250	52,370	52,490	52,610	52,730	52,850	52,970	53,090	53,200	53,320	53,440	53,560	53,680	53,790	16
17	57,140	57,260	57,390	57,510	57,640	57,770	57,890	58,020	58,140	58,270	58,390	58,510	58,640	58,760	58,890	59,010	59,130	59,250	59,380	59,500	59,620	17
18	62,870	63,000	63,130	63,260	63,390	63,520	63,650	63,780	63,910	64,040	64,170	64,300	64,430	64,560	64,680	64,810	64,940	65,070	65,190	65,320	65,440	18
19	68,610	68,740	68,880	69,010	69,150	69,280	69,420	69,550	69,690	69,820	69,950	70,090	70,220	70,350	70,480	70,620	70,750	70,880	71,010	71,140	71,270	19
20	73,570	73,710	73,850	73,990	74,130	74,270	74,410	74,560	74,700	74,840	74,980	75,120	75,250	75,390	75,530	75,670	75,810	75,950	76,080	76,220	76,360	20
21	78,520	78,670	78,820	78,970	79,120	79,260	79,410	79,560	79,710	79,850	80,000	80,140	80,290	80,440	80,580	80,720	80,870	81,010	81,160	81,300	81,440	21
22	83,480	83,640	83,790	83,950	84,100	84,260	84,410	84,560	84,720	84,870	85,020	85,170	85,330	85,480	85,630	85,780	85,930	86,080	86,230	86,380	86,530	22
23	89,800	89,930	90,070	90,200	90,330	90,460	90,590	90,720	90,840	90,970	91,100	91,220	91,350	91,470	91,600	91,720	91,850	91,970	92,090	92,210	92,330	23
24	96,120	96,230	96,340	96,450	96,550	96,660	96,760	96,870	96,970	97,070	97,170	97,270	97,370	97,470	97,570	97,670	97,760	97,860	97,950	98,050	98,140	24
25	102,400	102,500	102,600	102,700	102,800	102,900	102,900	103,000	103,100	103,200	103,300	103,300	103,400	103,500	103,500	103,600	103,700	103,700	103,800	103,900	103,900	25
26	103,600	103,800	104,000	104,200	104,400	104,600	104,800	105,000	105,200	105,400	105,600	105,700	105,900	106,100	106,300	106,500	106,700	106,900	107,100	107,300	107,500	26
27	104,700	105,000	105,300	105,600	106,000	106,300	106,600	106,900	107,200	107,500	107,900	108,200	108,500	108,800	109,100	109,400	109,800	110,100	110,400	110,700	111,000	27
28	105,800	106,200	106,700	107,100	107,500	108,000	108,400	108,800	109,300	109,700	110,200	110,600	111,000	111,500	111,900	112,300	112,800	113,200	113,700	114,100	114,500	28

GATE ARRANGEMENT	HEADWATER ELEVATION																				GATE ARRANGEMENT
	814.0	814.1	814.2	814.3	814.4	814.5	814.6	814.7	814.8	814.9	815.0	815.1	815.2	815.3	815.4	815.5	815.6	815.7	815.8	815.9	816.0	
1	2,500	2,510	2,510	2,520	2,520	2,530	2,530	2,540	2,540	2,550	2,550	2,560	2,570	2,570	2,580	2,580						1
2	5,380	5,390	5,400	5,410	5,430	5,440	5,450	5,460	5,470	5,480	5,490	5,510	5,520	5,530	5,540	5,550	5,560	5,570	5,590	5,600	5,610	2
3	8,300	8,320	8,330	8,350	8,370	8,390	8,410	8,420	8,440	8,460	8,480	8,490	8,510	8,530	8,550	8,560	8,580	8,600	8,620	8,630	8,650	3
4	11,350	11,380	11,400	11,430	11,450	11,480	11,500	11,530	11,550	11,580	11,600	11,630	11,650	11,680	11,700	11,730	11,750	11,780	11,800	11,830	11,850	4
5	14,510	14,540	14,570	14,600	14,640	14,670	14,700	14,730	14,760	14,790	14,830	14,860	14,890	14,920	14,950	14,980	15,020	15,050	15,080	15,110	15,140	5
6	17,380	17,420	17,460	17,500	17,540	17,570	17,610	17,650	17,690	17,730	17,770	17,810	17,850	17,880	17,920	17,960	18,000	18,040	18,080	18,120	18,150	6
7	20,610	20,660	20,700	20,750	20,790	20,840	20,880	20,930	20,970	21,020	21,060	21,110	21,150	21,200	21,240	21,290	21,330	21,380	21,420	21,470	21,510	7
8	23,740	23,800	23,850	23,900	23,950	24,010	24,060	24,110	24,160	24,210	24,270	24,320	24,370	24,420	24,470	24,520	24,570	24,630	24,680	24,730	24,780	8
9	27,010	27,070	27,130	27,190	27,250	27,310	27,370	27,430	27,490	27,550	27,610	27,670	27,730	27,790	27,850	27,910	27,960	28,020	28,080	28,140	28,200	9
10	30,230	30,300	30,370	30,430	30,500	30,570	30,640	30,710	30,770	30,840	30,910	30,980	31,040	31,110	31,180	31,240	31,310	31,380	31,440	31,510	31,570	10
11	33,420	33,500	33,580	33,650	33,730	33,810	33,880	33,960	34,040	34,110	34,190	34,260	34,340	34,410	34,490	34,560	34,630	34,710	34,780	34,850	34,930	11
12	37,320	37,400	37,490	37,570	37,660	37,740	37,830	37,910	37,990	38,080	38,160	38,240	38,330	38,410	38,490	38,570	38,650	38,730	38,810	38,890	38,970	12
13	41,320	41,410	41,500	41,600	41,690	41,780	41,870	41,970	42,060	42,150	42,240	42,330	42,420	42,510	42,600	42,690	42,780	42,860	42,950	43,040	43,130	13
14	45,420	45,510	45,610	45,710	45,810	45,910	46,000	46,100	46,200	46,290	46,390	46,480	46,580	46,670	46,770	46,860	46,950	47,050	47,140	47,230	47,320	14
15	49,570	49,670	49,780	49,890	50,000	50,100	50,210	50,310	50,420	50,530	50,630	50,740	50,840	50,940	51,050	51,150	51,250	51,350	51,460	51,560	51,660	15
16	53,790	53,910	54,020	54,140	54,260	54,370	54,490	54,600	54,710	54,830	54,940	55,050	55,160	55,270	55,390	55,500	55,610	55,710	55,820	55,930	56,040	16
17	59,620	59,740	59,860	59,980	60,100	60,220	60,340	60,450	60,570	60,690	60,800	60,920	61,040	61,150	61,260	61,380	61,490	61,600	61,710	61,820	61,930	17
18	65,440	65,570	65,690	65,820	65,940	66,060	66,190	66,310	66,430	66,550	66,670	66,790	66,910	67,030	67,140	67,260	67,380	67,490	67,600	67,720	67,830	18
19	71,270	71,400	71,530	71,660	71,780	71,910	72,040	72,160	72,290	72,410	72,540	72,660	72,780	72,900	73,020	73,140	73,260	73,380	73,500	73,610	73,730	19
20	76,360	76,490	76,630	76,760	76,900	77,030	77,160	77,290	77,430	77,560	77,690	77,820	77,950	78,080	78,210	78,340	78,460	78,590	78,710	78,840	78,960	20
21	81,440	81,580	81,720	81,870	82,010	82,150	82,290	82,430	82,570	82,710	82,840	82,980	83,120	83,260	83,390	83,530	83,660	83,800	83,930	84,070	84,200	21
22	86,530	86,680	86,820	86,970	87,120	87,270	87,410	87,560	87,710	87,850	88,000	88,140	88,290	88,430	88,580	88,720	88,860	89,010	89,150	89,290	89,440	22
23	92,330	92,460	92,600	92,730	92,860	92,990	93,120	93,250	93,380	93,500	93,630	93,760	93,890	94,010	94,140	94,260	94,390	94,510	94,630	94,760	94,880	23
24	98,140	98,250	98,370	98,480	98,600	98,710	98,820	98,940	99,050	99,160	99,270	99,380	99,480	99,590	99,700	99,800	99,910	100,000	100,100	100,200	100,300	24
25	103,900	104,000	104,100	104,200	104,300	104,400	104,500	104,600	104,700	104,800	104,900	105,000	105,100	105,200	105,300	105,300	105,400	105,500	105,600	105,700	105,800	25
26	107,500	107,700	107,900	108,100	108,300	108,500	108,800	109,000	109,200	109,400	110,200	110,300	110,300	110,400	110,400	110,500	110,600	110,600	110,700	110,700	110,800	26
27	111,000	111,300	111,700	112,000	112,300	112,700	113,000	113,300	113,600	114,000	115,500	115,500	115,600	115,600	115,600	115,600	115,700	115,700	115,700	115,800	115,800	27
28	114,500	115,000	115,400	115,900	116,300	116,800	117,200	117,700	118,100	118,500	120,800	120,800	120,800	120,800	120,800	120,800	120,800	120,800	120,800	120,800	120,800	28

HEADWATER 812 to 816
TAILWATER 790.51 to 791.5

See special instruction for preventing gate overflow on page 2.

MAY 2008

TELLICO DAM
SPILLWAY DISCHARGE
IN CUBIC FEET PER SECOND

HEADWATER ELEVATION

GATE ARRANGEMENT	816.0	816.1	816.2	816.3	816.4	816.5	816.6	816.7	816.8	816.9	817.0	817.1	817.2	817.3	817.4	817.5	817.6	817.7	817.8	817.9	818.0	GATE ARRANGEMENT
1																						1
2	5,610	5,620	5,630																			2
3	8,650	8,670	8,690	8,700	8,720	8,740	8,760	8,770	8,790	8,810	8,820											3
4	11,850	11,880	11,900	11,930	11,950	11,980	12,000	12,020	12,050	12,070	12,100	12,310	12,670	13,140	13,690	14,320	15,020	15,770				4
5	15,140	15,180	15,210	15,240	15,270	15,300	15,340	15,370	15,400	15,430	15,460	15,680	16,050	16,530	17,090	17,720	18,430	19,190	20,020	20,900	21,830	5
6	18,150	18,190	18,230	18,270	18,310	18,350	18,380	18,420	18,460	18,500	18,540	18,760	19,140	19,620	20,180	20,830	21,530	22,310	23,140	24,020	24,970	6
7	21,510	21,560	21,600	21,640	21,690	21,730	21,780	21,820	21,870	21,910	21,950	22,180	22,570	23,050	23,620	24,270	24,990	25,760	26,600	27,490	28,440	7
8	24,780	24,830	24,880	24,930	24,980	25,030	25,080	25,130	25,180	25,240	25,290	25,520	25,910	26,400	26,980	27,630	28,350	29,140	29,980	30,880	31,830	8
9	28,200	28,260	28,310	28,370	28,430	28,490	28,550	28,600	28,660	28,720	28,780	29,020	29,420	29,920	30,500	31,160	31,890	32,680	33,530	34,430	35,390	9
10	31,570	31,640	31,710	31,770	31,840	31,900	31,970	32,030	32,090	32,160	32,220	32,470	32,870	33,380	33,970	34,640	35,370	36,170	37,020	37,930	38,900	10
11	34,930	35,000	35,070	35,140	35,220	35,290	35,360	35,430	35,500	35,570	35,640	35,890	36,300	36,810	37,410	38,080	38,820	39,620	40,480	41,400	42,370	11
12	38,970	39,050	39,130	39,210	39,280	39,360	39,440	39,510	39,590	39,670	39,740	40,000	40,420	40,930	41,530	42,210	42,950	43,760	44,630	45,550	46,520	12
13	43,130	43,210	43,300	43,380	43,470	43,550	43,640	43,720	43,800	43,880	43,970	44,230	44,650	45,180	45,780	46,470	47,220	48,030	48,900	49,830	50,810	13
14	47,320	47,420	47,510	47,600	47,690	47,780	47,870	47,960	48,050	48,130	48,220	48,490	48,920	49,450	50,060	50,750	51,510	52,330	53,210	54,140	55,130	14
15	51,660	51,760	51,860	51,960	52,060	52,160	52,250	52,350	52,450	52,550	52,640	52,920	53,360	53,900	54,520	55,220	55,980	56,810	57,700	58,640	59,640	15
16	56,040	56,150	56,250	56,360	56,460	56,570	56,670	56,770	56,880	56,980	57,080	57,370	57,810	58,350	58,980	59,680	60,450	61,280	62,170	63,120	64,120	16
17	61,930	62,040	62,150	62,260	62,370	62,470	62,580	62,680	62,790	62,890	63,000	63,280	63,730	64,270	64,900	65,600	66,370	67,200	68,100	69,040	70,040	17
18	67,830	67,940	68,050	68,160	68,270	68,380	68,490	68,600	68,700	68,810	68,910	69,200	69,640	70,190	70,820	71,520	72,290	73,120	74,020	74,960	75,970	18
19	73,730	73,840	73,950	74,070	74,180	74,290	74,400	74,510	74,610	74,720	74,830	75,120	75,560	76,110	76,740	77,440	78,210	79,050	79,940	80,890	81,890	19
20	78,960	79,090	79,210	79,340	79,460	79,580	79,710	79,830	79,950	80,070	80,190	80,490	80,950	81,510	82,150	82,870	83,660	84,500	85,410	86,380	87,390	20
21	84,200	84,340	84,470	84,610	84,750	84,880	85,010	85,150	85,280	85,420	85,550	85,860	86,340	86,910	87,570	88,300	89,100	89,960	90,890	91,860	92,900	21
22	89,440	89,590	89,730	89,880	90,030	90,180	90,320	90,470	90,620	90,760	90,910	91,240	91,720	92,310	92,980	93,730	94,550	95,420	96,360	97,350	98,400	22
23	94,880	95,020	95,170	95,310	95,450	95,600	95,740	95,880	96,020	96,160	96,300	96,630	97,110	97,690	98,350	99,100	99,900	100,800	101,700	102,700	103,700	23
24	100,300	100,500	100,600	100,700	100,900	101,000	101,200	101,300	101,400	101,600	101,700	102,000	102,500	103,100	103,700	104,500	105,300	106,100	107,100	108,000	109,100	24
25	105,800	105,900	106,000	106,200	106,300	106,400	106,600	106,700	106,800	107,000	107,100	107,400	107,900	108,400	109,100	109,800	110,600	111,500	112,400	113,400	114,400	25
26	110,800	110,900	111,000	111,100	111,200	111,300	111,300	111,400	111,500	111,600	111,700	112,000	112,400	112,900	113,600	114,300	115,000	115,800	116,700	117,600	118,600	26
27	115,800	115,900	115,900	116,000	116,000	116,100	116,100	116,200	116,200	116,300	116,300	116,600	116,900	117,400	118,000	118,700	119,400	120,200	121,000	121,900	122,900	27
28	120,800	120,800	120,900	120,900	120,900	120,900	120,900	120,900	120,900	120,900	120,900	121,100	121,500	121,900	122,500	123,100	123,800	124,500	125,300	126,200	127,100	28

HEADWATER ELEVATION

GATE ARRANGEMENT	818.0	818.1	818.2	818.3	818.4	818.5	818.6	818.7	818.8	818.9	819.0	819.1	819.2	819.3	819.4	819.5	819.6	819.7	819.8	819.9	820.0	GATE ARRANGEMENT
1																						1
2																						2
3																						3
4																						4
5	21,830	22,820	23,860	24,950	26,080																	5
6	24,970	25,960	27,000	28,100	29,230	30,420	31,650	32,930	34,250	35,610	37,010	38,460										6
7	28,440	29,440	30,490	31,590	32,730	33,920	35,160	36,440	37,770	39,130	40,540	41,990	43,480	45,020	46,590	48,200	49,840	51,530	53,250			7
8	31,830	32,840	33,890	35,000	36,150	37,350	38,590	39,880	41,210	42,580	44,000	45,450	46,950	48,490	50,060	51,680	53,330	55,030	56,760	58,520	60,330	8
9	35,390	36,410	37,470	38,580	39,740	40,940	42,190	43,490	44,820	46,200	47,630	49,090	50,590	52,140	53,720	55,340	57,000	58,700	60,440	62,210	64,020	9
10	38,900	39,920	40,990	42,100	43,270	44,480	45,730	47,030	48,370	49,760	51,180	52,650	54,160	55,710	57,300	58,930	60,590	62,290	64,040	65,810	67,630	10
11	42,370	43,390	44,470	45,590	46,760	47,970	49,230	50,530	51,880	53,270	54,700	56,170	57,690	59,240	60,830	62,460	64,130	65,840	67,590	69,370	71,190	11
12	46,520	47,550	48,630	49,750	50,930	52,150	53,410	54,720	56,070	57,460	58,900	60,380	61,890	63,450	65,050	66,680	68,360	70,070	71,820	73,600	75,430	12
13	50,810	51,840	52,930	54,060	55,240	56,460	57,730	59,050	60,400	61,800	63,240	64,720	66,250	67,810	69,410	71,050	72,730	74,450	76,200	78,000	79,820	13
14	55,130	56,170	57,260	58,400	59,590	60,820	62,090	63,420	64,780	66,190	67,630	69,120	70,650	72,220	73,830	75,480	77,170	78,890	80,650	82,450	84,290	14
15	59,640	60,690	61,780	62,930	64,120	65,360	66,650	67,980	69,350	70,770	72,220	73,720	75,260	76,840	78,450	80,110	81,800	83,540	85,310	87,110	88,960	15
16	64,120	65,170	66,280	67,430	68,630	69,870	71,160	72,490	73,870	75,290	76,750	78,250	79,790	81,370	82,990	84,650	86,350	88,080	89,860	91,670	93,510	16
17	70,040	71,100	72,200	73,350	74,550	75,790	77,080	78,410	79,790	81,210	82,670	84,170	85,710	87,290	88,910	90,570	92,260	94,000	95,770	97,580	99,420	17
18	75,970	77,020	78,120	79,270	80,470	81,710	83,000	84,330	85,710	87,130	88,590	90,090	91,630	93,210	94,830	96,480	98,180	99,910	101,700	103,500	105,300	18
19	81,890	82,940	84,040	85,200	86,390	87,640	88,920	90,260	91,630	93,050	94,510	96,010	97,550	99,120	100,700	102,400	104,100	105,800	107,600	109,400	111,200	19
20	87,390	88,460	89,580	90,740	91,960	93,220	94,520	95,870	97,260	98,690	100,200	101,700	103,200	104,800	106,500	108,100	109,800	111,600	113,400	115,200	117,100	20
21	92,900	93,980	95,110	96,290	97,520	98,800	100,100	101,500	102,900	104,300	105,800	107,400	108,900	110,500	112,200	113,900	115,600	117,400	119,200	121,000	122,900	21
22	98,400	99,500	100,600	101,800	103,100	104,400	105,700	107,100	108,500	110,000	111,500	113,000	114,600	116,200	117,900	119,600	121,400	123,100	125,000	126,800	128,700	22
23	103,700	104,800	106,000	107,200	108,500	109,700	111,100	112,500	113,900	115,400	116,900	118,400	120,000	121,700	123,400	125,100	126,800	128,600	130,400	132,300	134,200	23
24	109,100	110,200	111,300	112,600	113,800	115,100	116,500	117,900	119,300	120,800	122,300	123,900	125,500	127,100	128,800	130,500	132,300	134,100	135,900	137,800	139,700	24
25	114,400	115,500	116,700	117,900	119,200	120,500	121,900	123,300	124,700	126,200	127,700	129,300	130,900	132,600	134,200	136,000	137,700	139,500	141,400	143,300	145,200	25
26	118,600	119,800	121,000	122,200	123,500	124,800	126,200	127,600	129,100	130,600	132,100	133,700	135,300	137,000	138,700	140,400	142,200	144,000	145,900	147,800	149,700	26
27	122,900	124,000	125,200	126,500	127,800	129,100	130,500	131,900	133,400	134,900	136,500	138,100	139,700	141,400	143,100	144,900	146,700	148,500	150,400	152,300	154,200	27
28	127,100	128,300	129,500	130,800	132,100	133,400	134,800	136,300	137,800	139,300	140,900	142,500	144,100	145,800	147,500	149,300	151,100	153,000	154,800	156,800	158,700	28

MAY 2008

See special instruction for preventing gate overflow on page 2.

HEADWATER 816 to 820
TAILWATER 790.51 to 791.5

TELLICO DAM
SPILLWAY DISCHARGE
IN CUBIC FEET PER SECOND

GATE ARRANGEMENT	HEADWATER ELEVATION																				GATE ARRANGEMENT
	800.0	800.1	800.2	800.3	800.4	800.5	800.6	800.7	800.8	800.9	801.0	801.1	801.2	801.3	801.4	801.5	801.6	801.7	801.8	801.9	802.0	
1	1,480	1,480	1,490	1,500	1,510	1,520	1,530	1,540	1,550	1,560	1,560	1,570	1,580	1,590	1,600	1,610	1,620	1,620	1,630	1,640	1,650	1
2	3,170	3,190	3,210	3,230	3,250	3,270	3,290	3,310	3,330	3,350	3,360	3,380	3,400	3,420	3,440	3,460	3,480	3,490	3,510	3,530	3,550	2
3	4,890	4,920	4,950	4,980	5,010	5,040	5,070	5,100	5,130	5,160	5,190	5,220	5,240	5,270	5,300	5,330	5,360	5,380	5,410	5,440	5,470	3
4	6,710	6,750	6,780	6,820	6,860	6,900	6,940	6,970	7,010	7,050	7,090	7,120	7,160	7,200	7,240	7,270	7,310	7,350	7,380	7,420	7,460	4
5	8,450	8,500	8,550	8,590	8,640	8,690	8,740	8,790	8,840	8,890	8,940	8,990	9,040	9,090	9,140	9,190	9,240	9,290	9,340	9,390	9,440	5
6	10,090	10,140	10,200	10,260	10,320	10,380	10,440	10,490	10,550	10,610	10,670	10,730	10,790	10,850	10,900	10,960	11,020	11,080	11,140	11,200	11,260	6
7	12,020	12,080	12,150	12,220	12,290	12,360	12,430	12,500	12,570	12,640	12,710	12,780	12,850	12,920	12,990	13,060	13,130	13,200	13,270	13,340	13,410	7
8	13,910	13,990	14,070	14,150	14,230	14,320	14,400	14,480	14,560	14,640	14,720	14,800	14,880	14,960	15,040	15,120	15,200	15,280	15,360	15,440	15,520	8
9	15,890	15,980	16,070	16,160	16,250	16,340	16,430	16,520	16,620	16,710	16,800	16,890	16,980	17,070	17,160	17,260	17,350	17,440	17,530	17,620	17,710	9
10	17,840	17,940	18,050	18,150	18,250	18,350	18,450	18,550	18,660	18,760	18,860	18,960	19,060	19,170	19,270	19,370	19,470	19,570	19,670	19,770	19,880	10
11	19,800	19,910	20,020	20,130	20,240	20,360	20,470	20,580	20,690	20,800	20,920	21,030	21,140	21,250	21,370	21,480	21,590	21,700	21,810	21,920	22,040	11
12	22,250	22,370	22,490	22,610	22,740	22,860	22,980	23,100	23,230	23,350	23,470	23,590	23,720	23,840	23,960	24,080	24,210	24,330	24,450	24,570	24,690	12
13	24,790	24,920	25,050	25,180	25,310	25,450	25,580	25,710	25,840	25,970	26,110	26,240	26,370	26,500	26,630	26,760	26,900	27,030	27,160	27,290	27,420	13
14	27,370	27,510	27,650	27,800	27,940	28,080	28,220	28,360	28,510	28,650	28,790	28,930	29,070	29,220	29,360	29,500	29,640	29,780	29,920	30,070	30,210	14
15	30,020	30,170	30,320	30,480	30,630	30,780	30,930	31,080	31,230	31,390	31,540	31,690	31,840	31,990	32,140	32,300	32,450	32,600	32,750	32,900	33,050	15
16	32,700	32,860	33,020	33,180	33,340	33,500	33,670	33,830	33,990	34,150	34,310	34,470	34,630	34,800	34,960	35,120	35,280	35,440	35,600	35,760	35,920	16
17	38,590	38,740	38,890	39,040	39,200	39,350	39,500	39,650	39,800	39,950	40,100	40,250	40,400	40,550	40,700	40,850	41,000	41,150	41,300	41,450	41,600	17
18	44,480	44,620	44,760	44,910	45,050	45,190	45,330	45,470	45,610	45,750	45,890	46,030	46,170	46,310	46,450	46,580	46,720	46,860	47,000	47,140	47,280	18
19	50,370	50,500	50,640	50,770	50,900	51,030	51,160	51,290	51,420	51,550	51,680	51,810	51,940	52,060	52,190	52,320	52,450	52,570	52,700	52,830	52,960	19
20	52,120	52,350	52,570	52,800	53,020	53,240	53,460	53,690	53,910	54,130	54,350	54,570	54,790	55,010	55,230	55,450	55,670	55,890	56,110	56,330	56,550	20
21	53,870	54,190	54,500	54,820	55,140	55,450	55,770	56,080	56,400	56,710	57,020	57,340	57,650	57,960	58,280	58,590	58,900	59,210	59,530	59,840	60,150	21
22	55,620	56,030	56,440	56,850	57,260	57,660	58,070	58,480	58,890	59,290	59,700	60,100	60,510	60,910	61,320	61,720	62,130	62,530	62,940	63,340	63,750	22
23	55,620	56,030	56,440	56,850	57,260	57,660	58,070	58,480	58,890	59,290	59,700	60,100	60,510	60,910	61,320	61,720	62,130	62,530	62,940	63,340	63,750	23
24	55,620	56,030	56,440	56,850	57,260	57,660	58,070	58,480	58,890	59,290	59,700	60,100	60,510	60,910	61,320	61,720	62,130	62,530	62,940	63,340	63,750	24
25	55,620	56,030	56,440	56,850	57,260	57,660	58,070	58,480	58,890	59,290	59,700	60,100	60,510	60,910	61,320	61,720	62,130	62,530	62,940	63,340	63,750	25
26	55,620	56,030	56,440	56,850	57,260	57,660	58,070	58,480	58,890	59,290	59,700	60,100	60,510	60,910	61,320	61,720	62,130	62,530	62,940	63,340	63,750	26
27	55,620	56,030	56,440	56,850	57,260	57,660	58,070	58,480	58,890	59,290	59,700	60,100	60,510	60,910	61,320	61,720	62,130	62,530	62,940	63,340	63,750	27
28	55,620	56,030	56,440	56,850	57,260	57,660	58,070	58,480	58,890	59,290	59,700	60,100	60,510	60,910	61,320	61,720	62,130	62,530	62,940	63,340	63,750	28

GATE ARRANGEMENT	HEADWATER ELEVATION																				GATE ARRANGEMENT
	802.0	802.1	802.2	802.3	802.4	802.5	802.6	802.7	802.8	802.9	803.0	803.1	803.2	803.3	803.4	803.5	803.6	803.7	803.8	803.9	804.0	
1	1,650	1,660	1,670	1,670	1,680	1,690	1,700	1,710	1,710	1,720	1,730	1,740	1,750	1,750	1,760	1,770	1,780	1,780	1,790	1,800	1,810	1
2	3,550	3,560	3,580	3,600	3,620	3,630	3,650	3,670	3,690	3,700	3,720	3,740	3,750	3,770	3,790	3,800	3,820	3,840	3,850	3,870	3,890	2
3	5,470	5,490	5,520	5,550	5,580	5,600	5,630	5,660	5,680	5,710	5,730	5,760	5,790	5,810	5,840	5,860	5,890	5,910	5,940	5,960	5,990	3
4	7,460	7,490	7,530	7,560	7,600	7,640	7,670	7,710	7,740	7,780	7,810	7,850	7,880	7,920	7,950	7,990	8,020	8,060	8,090	8,120	8,160	4
5	9,440	9,490	9,540	9,590	9,630	9,680	9,730	9,780	9,830	9,880	9,930	9,970	10,020	10,070	10,120	10,160	10,210	10,260	10,300	10,350	10,390	5
6	11,260	11,310	11,370	11,430	11,490	11,550	11,600	11,660	11,720	11,780	11,830	11,890	11,950	12,000	12,060	12,120	12,170	12,230	12,280	12,340	12,390	6
7	13,410	13,480	13,550	13,610	13,680	13,750	13,820	13,890	13,960	14,020	14,090	14,160	14,230	14,290	14,360	14,430	14,490	14,560	14,620	14,690	14,750	7
8	15,520	15,600	15,680	15,760	15,840	15,920	16,000	16,080	16,160	16,240	16,310	16,390	16,470	16,540	16,620	16,700	16,770	16,850	16,920	17,000	17,070	8
9	17,710	17,800	17,890	17,980	18,070	18,160	18,250	18,340	18,430	18,520	18,600	18,690	18,780	18,860	18,950	19,040	19,120	19,210	19,290	19,380	19,460	9
10	19,880	19,980	20,080	20,180	20,280	20,380	20,480	20,580	20,680	20,770	20,870	20,970	21,070	21,170	21,260	21,360	21,450	21,550	21,640	21,740	21,830	10
11	22,040	22,150	22,260	22,370	22,480	22,590	22,700	22,810	22,920	23,030	23,140	23,240	23,350	23,460	23,560	23,670	23,780	23,880	23,990	24,090	24,190	11
12	24,690	24,810	24,940	25,060	25,180	25,300	25,420	25,540	25,660	25,770	25,890	26,010	26,130	26,250	26,360	26,480	26,590	26,710	26,820	26,940	27,050	12
13	27,420	27,550	27,680	27,810	27,940	28,070	28,200	28,330	28,460	28,590	28,710	28,840	28,970	29,090	29,220	29,350	29,470	29,590	29,720	29,840	29,960	13
14	30,210	30,350	30,490	30,630	30,770	30,910	31,050	31,190	31,320	31,460	31,600	31,740	31,870	32,010	32,140	32,280	32,410	32,540	32,680	32,810	32,940	14
15	33,050	33,200	33,350	33,500	33,650	33,800	33,950	34,090	34,240	34,390	34,540	34,680	34,830	34,970	35,120	35,260	35,410	35,550	35,690	35,830	35,970	15
16	35,920	36,080	36,240	36,400	36,560	36,710	36,870	37,030	37,190	37,340	37,500	37,660	37,810	37,970	38,120	38,270	38,430	38,580	38,730	38,880	39,030	16
17	41,600	41,750	41,900	42,050	42,190	42,340	42,490	42,640	42,790	42,940	43,090	43,230	43,380	43,530	43,680	43,820	43,970	44,120	44,270	44,410	44,560	17
18	47,280	47,420	47,560	47,690	47,830	47,970	48,110	48,250	48,390	48,530	48,670	48,810	48,950	49,090	49,230	49,370	49,520	49,660	49,800	49,940	50,090	18
19	52,960	53,090	53,210	53,340	53,470	53,600	53,730	53,860	53,990	54,120	54,250	54,390	54,520	54,650	54,790	54,920	55,060	55,200	55,340	55,480	55,620	19
20	56,550	56,770	56,990	57,210	57,440	57,660	57,880	58,100	58,320	58,540	58,770	58,990	59,210	59,440	59,660	59,890	60,110	60,340	60,570	60,800	61,030	20
21	60,150	60,460	60,770	61,090	61,400	61,710	62,020	62,340	62,650	62,960	63,280	63,590	63,910	64,220	64,540	64,850	65,170	65,480	65,800	66,120	66,440	21
22	63,750	64,150	64,560	64,960	65,360	65,770	66,170	66,580	66,980	67,390	67,790	68,200	68,600	69,010	69,410	69,820	70,220	70,630	71,030	71,440	71,850	22
23	63,750	64,150	64,560	64,960	65,360	65,770	66,170	66,580	66,980	67,390	67,790	68,200	68,600	69,010	69,410	69,820	70,220	70,630	71,030	71,440	71,850	23
24	63,750	64,150	64,560	64,960	65,360	65,770	66,170	66,580	66,980	67,390	67,790	68,200	68,600	69,010	69,410	69,820	70,220	70,630	71,030	71,440	71,850	24
25	63,750	64,150	64,560	64,960	65,360	65,770	66,170	66,580	66,980	67,390	67,790	68,200	68,600	69,010	69,410	69,820	70,220	70,630	71,030	71,440	71,850	25
26	63,750	64,150	64,560	64,960	65,360	65,770	66,170	66,580	66,980	67,390	67,790	68,200	68,600	69,010	69,410	69,820	70,220	70,630	71,030	71,440	71,850	26
27	63,750	64,150	64,560	64,960	65,360	65,770	66,170	66,580	66,980	67,390	67,790	68,200	68,600	69,010	69,410	69,820	70,220	70,630	71,030	71,440	71,850	27
28	63,750	64,150	64,560	64,960	65,360	65,770	66,170	66,580	66,980	67,390	67,790	68,200	68,600	69,010	69,410	69,820	70,220	70,630	71,030	71,440	71,850	28

HEADWATER 800 to 804
TAILWATER 791.51 to 792.5

MAY 2008

TELLICO DAM

SPILLWAY DISCHARGE

IN CUBIC FEET PER SECOND

HEADWATER ELEVATION

GATE ARRANGEMENT	804.0	804.1	804.2	804.3	804.4	804.5	804.6	804.7	804.8	804.9	805.0	805.1	805.2	805.3	805.4	805.5	805.6	805.7	805.8	805.9	806.0	GATE ARRANGEMENT
1	1,810	1,810	1,820	1,830	1,840	1,840	1,850	1,860	1,870	1,870	1,880	1,890	1,890	1,900	1,910	1,920	1,920	1,930	1,940	1,940	1,950	1
2	3,890	3,900	3,920	3,930	3,950	3,970	3,980	4,000	4,010	4,030	4,040	4,060	4,080	4,090	4,110	4,120	4,140	4,150	4,170	4,180	4,200	2
3	5,990	6,010	6,040	6,060	6,090	6,110	6,140	6,160	6,190	6,210	6,230	6,260	6,280	6,300	6,330	6,350	6,380	6,400	6,420	6,450	6,470	3
4	8,160	8,190	8,230	8,260	8,290	8,330	8,360	8,390	8,430	8,460	8,490	8,530	8,560	8,590	8,620	8,660	8,690	8,720	8,750	8,790	8,820	4
5	10,390	10,440	10,490	10,530	10,580	10,620	10,660	10,710	10,750	10,800	10,840	10,880	10,920	10,970	11,010	11,050	11,090	11,140	11,180	11,220	11,260	5
6	12,390	12,450	12,500	12,550	12,610	12,660	12,710	12,770	12,820	12,870	12,920	12,980	13,030	13,080	13,130	13,180	13,230	13,280	13,330	13,380	13,430	6
7	14,750	14,820	14,880	14,940	15,000	15,070	15,130	15,190	15,250	15,310	15,370	15,430	15,490	15,550	15,610	15,670	15,730	15,790	15,850	15,910	15,960	7
8	17,070	17,140	17,210	17,290	17,360	17,430	17,500	17,570	17,640	17,710	17,780	17,840	17,910	17,980	18,050	18,110	18,180	18,250	18,310	18,380	18,440	8
9	19,460	19,540	19,620	19,710	19,790	19,870	19,950	20,030	20,110	20,180	20,260	20,340	20,420	20,490	20,570	20,650	20,720	20,800	20,870	20,940	21,020	9
10	21,830	21,920	22,020	22,110	22,200	22,290	22,380	22,470	22,560	22,650	22,730	22,820	22,910	22,990	23,080	23,160	23,250	23,330	23,420	23,500	23,580	10
11	24,190	24,300	24,400	24,500	24,600	24,700	24,800	24,900	25,000	25,090	25,190	25,290	25,380	25,480	25,570	25,670	25,760	25,850	25,940	26,040	26,130	11
12	27,050	27,160	27,270	27,380	27,490	27,600	27,710	27,820	27,930	28,030	28,140	28,240	28,350	28,450	28,560	28,660	28,760	28,860	28,960	29,070	29,170	12
13	29,960	30,080	30,200	30,320	30,440	30,560	30,680	30,800	30,910	31,030	31,140	31,260	31,370	31,490	31,600	31,710	31,820	31,930	32,040	32,150	32,260	13
14	32,940	33,070	33,200	33,330	33,460	33,590	33,710	33,840	33,960	34,090	34,210	34,340	34,460	34,580	34,700	34,820	34,940	35,060	35,180	35,300	35,420	14
15	35,970	36,110	36,250	36,390	36,530	36,670	36,800	36,940	37,070	37,210	37,340	37,480	37,610	37,740	37,870	38,000	38,130	38,260	38,390	38,520	38,650	15
16	39,030	39,180	39,330	39,480	39,620	39,770	39,920	40,060	40,200	40,350	40,490	40,630	40,770	40,920	41,060	41,200	41,330	41,470	41,610	41,750	41,890	16
17	44,560	44,710	44,850	45,000	45,150	45,290	45,440	45,590	45,730	45,880	46,020	46,170	46,310	46,460	46,600	46,750	46,890	47,040	47,180	47,330	47,470	17
18	50,090	50,230	50,380	50,520	50,670	50,820	50,960	51,110	51,260	51,410	51,560	51,700	51,850	52,000	52,150	52,300	52,450	52,600	52,750	52,910	53,060	18
19	55,620	55,760	55,900	56,050	56,190	56,340	56,490	56,640	56,790	56,940	57,090	57,240	57,390	57,550	57,700	57,860	58,010	58,170	58,330	58,480	58,640	19
20	61,030	61,260	61,490	61,720	61,950	62,190	62,340	62,470	62,600	62,730	62,870	63,000	63,130	63,260	63,400	63,530	63,660	63,800	63,930	64,060	64,200	20
21	66,440	66,750	67,070	67,390	67,710	68,030	68,180	68,300	68,410	68,530	68,640	68,760	68,870	68,980	69,090	69,200	69,310	69,420	69,530	69,640	69,750	21
22	71,850	72,250	72,660	73,070	73,470	73,880	74,030	74,130	74,230	74,330	74,420	74,520	74,610	74,700	74,790	74,880	74,970	75,050	75,140	75,220	75,300	22
23	71,850	72,250	72,660	73,070	73,470	73,880	74,120	74,320	74,520	74,720	74,920	75,120	75,320	75,520	75,710	75,910	76,110	76,300	76,490	76,690	76,880	23
24	71,850	72,250	72,660	73,070	73,470	73,880	74,200	74,510	74,810	75,120	75,420	75,730	76,030	76,330	76,640	76,940	77,240	77,550	77,850	78,150	78,450	24
25	71,850	72,250	72,660	73,070	73,470	73,880	74,290	74,700	75,100	75,510	75,920	76,330	76,740	77,150	77,560	77,970	78,380	78,790	79,200	79,620	80,030	25
26	71,850	72,250	72,660	73,070	73,470	73,880	74,290	74,700	75,100	75,510	75,920	76,330	76,740	77,150	77,560	77,970	78,380	78,790	79,200	79,620	80,030	26
27	71,850	72,250	72,660	73,070	73,470	73,880	74,290	74,700	75,100	75,510	75,920	76,330	76,740	77,150	77,560	77,970	78,380	78,790	79,200	79,620	80,030	27
28	71,850	72,250	72,660	73,070	73,470	73,880	74,290	74,700	75,100	75,510	75,920	76,330	76,740	77,150	77,560	77,970	78,380	78,790	79,200	79,620	80,030	28

HEADWATER ELEVATION

GATE ARRANGEMENT	806.0	806.1	806.2	806.3	806.4	806.5	806.6	806.7	806.8	806.9	807.0	807.1	807.2	807.3	807.4	807.5	807.6	807.7	807.8	807.9	808.0	GATE ARRANGEMENT
1	1,950	1,960	1,970	1,970	1,980	1,990	1,990	2,000	2,010	2,010	2,020	2,030	2,030	2,040	2,050	2,050	2,060	2,070	2,070	2,080	2,090	1
2	4,200	4,210	4,230	4,240	4,260	4,270	4,290	4,300	4,310	4,330	4,340	4,360	4,370	4,390	4,400	4,420	4,430	4,440	4,460	4,470	4,490	2
3	6,470	6,490	6,510	6,540	6,560	6,580	6,610	6,630	6,650	6,670	6,700	6,720	6,740	6,760	6,780	6,810	6,830	6,850	6,870	6,890	6,920	3
4	8,820	8,850	8,880	8,910	8,940	8,980	9,010	9,040	9,070	9,100	9,130	9,160	9,190	9,220	9,260	9,290	9,320	9,350	9,380	9,410	9,440	4
5	11,260	11,300	11,340	11,380	11,420	11,460	11,500	11,540	11,580	11,620	11,660	11,700	11,740	11,780	11,820	11,860	11,890	11,930	11,970	12,010	12,050	5
6	13,430	13,480	13,530	13,580	13,630	13,680	13,720	13,770	13,820	13,870	13,920	13,960	14,010	14,060	14,110	14,150	14,200	14,250	14,290	14,340	14,390	6
7	15,960	16,020	16,080	16,130	16,190	16,250	16,300	16,360	16,420	16,470	16,530	16,580	16,640	16,690	16,750	16,800	16,860	16,910	16,960	17,020	17,070	7
8	18,440	18,510	18,570	18,630	18,700	18,760	18,820	18,890	18,950	19,010	19,070	19,140	19,200	19,260	19,320	19,380	19,440	19,500	19,560	19,620	19,680	8
9	21,020	21,090	21,160	21,240	21,310	21,380	21,450	21,520	21,600	21,670	21,740	21,810	21,880	21,950	22,020	22,090	22,150	22,220	22,290	22,360	22,430	9
10	23,580	23,670	23,750	23,830	23,910	23,990	24,070	24,150	24,230	24,310	24,390	24,470	24,550	24,620	24,700	24,780	24,860	24,930	25,010	25,090	25,160	10
11	26,130	26,220	26,310	26,400	26,490	26,580	26,670	26,760	26,840	26,930	27,020	27,100	27,190	27,280	27,360	27,450	27,530	27,620	27,700	27,780	27,870	11
12	29,170	29,270	29,370	29,460	29,560	29,660	29,760	29,850	29,950	30,050	30,140	30,240	30,330	30,430	30,520	30,610	30,710	30,800	30,890	30,990	31,080	12
13	32,260	32,370	32,480	32,590	32,700	32,800	32,910	33,010	33,120	33,230	33,330	33,430	33,540	33,640	33,750	33,850	33,950	34,050	34,150	34,260	34,360	13
14	35,420	35,540	35,650	35,770	35,890	36,000	36,120	36,230	36,350	36,460	36,580	36,690	36,800	36,910	37,030	37,140	37,250	37,360	37,470	37,580	37,690	14
15	38,650	38,770	38,900	39,030	39,150	39,280	39,400	39,530	39,650	39,770	39,900	40,020	40,140	40,260	40,390	40,510	40,630	40,750	40,870	40,990	41,110	15
16	41,890	42,020	42,160	42,290	42,430	42,560	42,700	42,830	42,960	43,100	43,230	43,360	43,490	43,620	43,750	43,880	44,010	44,140	44,270	44,400	44,530	16
17	47,470	47,610	47,760	47,900	48,040	48,190	48,330	48,470	48,620	48,760	48,900	49,040	49,180	49,320	49,460	49,600	49,740	49,880	50,020	50,160	50,300	17
18	53,060	53,210	53,360	53,510	53,660	53,810	53,960	54,120	54,270	54,420	54,570	54,720	54,870	55,020	55,170	55,320	55,470	55,620	55,770	55,920	56,070	18
19	58,640	58,800	58,960	59,120	59,280	59,440	59,600	59,760	59,920	60,080	60,240	60,400	60,560	60,720	60,880	61,040	61,210	61,360	61,520	61,680	61,840	19
20	64,200	64,330	64,470	64,610	64,740	64,880	65,020	65,150	65,290	65,420	65,560	65,690	65,830	65,960	66,100	66,230	66,360	66,490	66,630	66,760	66,890	20
21	69,750	69,870	69,980	70,100	70,210	70,320	70,430	70,550	70,660	70,770	70,880	70,990	71,090	71,200	71,310	71,420	71,520	71,620	71,730	71,830	71,930	21
22	75,300	75,400	75,490	75,580	75,670	75,760	75,850	75,940	76,030	76,110	76,200	76,280	76,360	76,440	76,520	76,600	76,680	76,760	76,830	76,910	76,980	22
23	76,880	77,080	77,280	77,480	77,680	77,870	78,070	78,270	78,460	78,660	78,850	79,050	79,240	79,430	79,630	79,820	80,010	80,200	80,390	80,580	80,770	23
24	78,450	78,760	79,070	79,370	79,680	79,980	80,290	80,590	80,900	81,200	81,510	81,810	82,120	82,420	82,730	83,030	83,340	83,640	83,950	84,250	84,550	24
25	80,030	80,440	80,850	81,270	81,680	82,090	82,510	82,920	83,340	83,750	84,170	84,580	85,000	85,420	85,830	86,250	86,670	87,090	87,500	87,920	88,340	25
26	80,030	80,440	80,850	81,270	81,680	82,090	82,510	82,920	83,340	83,750	84,170	84,580	85,000	85,420	85,830	86,250	86,670	87,090	87,500	87,920	88,340	26
27	80,030	80,440	80,850	81,270	81,680	82,090	82,510	82,920	83,340	83,750	84,170	84,580	85,000	85,420	85,830	86,250	86,670	87,090	87,500	87,920	88,340	27
28	80,030	80,440	80,850	81,270	81,680	82,090	82,510	82,920	83,340	83,750	84,170	84,580	85,000	85,420	85,830	86,250	86,670	87,090	87,500	87,920	88,340	28

MAY 2008

HEADWATER 804 to 808
TAILWATER 791.51 to 792.5

TELLICO DAM
SPILLWAY DISCHARGE
IN CUBIC FEET PER SECOND

HEADWATER ELEVATION

GATE ARRANGEMENT	808.0	808.1	808.2	808.3	808.4	808.5	808.6	808.7	808.8	808.9	809.0	809.1	809.2	809.3	809.4	809.5	809.6	809.7	809.8	809.9	810.0	GATE ARRANGEMENT
1	2,090	2,090	2,100	2,110	2,110	2,120	2,120	2,130	2,140	2,140	2,150	2,160	2,160	2,170	2,180	2,180	2,190	2,190	2,200	2,210	2,210	1
2	4,490	4,500	4,510	4,530	4,540	4,560	4,570	4,580	4,600	4,610	4,620	4,640	4,650	4,670	4,680	4,690	4,710	4,720	4,730	4,750	4,760	2
3	6,920	6,940	6,960	6,980	7,000	7,020	7,040	7,060	7,090	7,110	7,130	7,150	7,170	7,190	7,210	7,230	7,250	7,270	7,290	7,310	7,330	3
4	9,440	9,470	9,500	9,530	9,560	9,590	9,620	9,650	9,680	9,700	9,730	9,760	9,790	9,820	9,850	9,880	9,910	9,940	9,970	9,990	10,020	4
5	12,050	12,090	12,120	12,160	12,200	12,240	12,280	12,310	12,350	12,390	12,430	12,460	12,500	12,540	12,580	12,610	12,650	12,690	12,720	12,760	12,800	5
6	14,390	14,430	14,480	14,530	14,570	14,620	14,670	14,710	14,760	14,800	14,850	14,890	14,940	14,990	15,030	15,080	15,120	15,170	15,210	15,260	15,300	6
7	17,070	17,130	17,180	17,230	17,290	17,340	17,390	17,450	17,500	17,550	17,610	17,660	17,710	17,770	17,820	17,870	17,920	17,980	18,030	18,080	18,130	7
8	19,680	19,750	19,810	19,870	19,930	19,990	20,050	20,110	20,170	20,230	20,280	20,340	20,400	20,460	20,520	20,580	20,640	20,700	20,760	20,820	20,880	8
9	22,430	22,500	22,570	22,630	22,700	22,770	22,840	22,910	22,970	23,040	23,110	23,170	23,240	23,310	23,380	23,440	23,510	23,570	23,640	23,710	23,770	9
10	25,160	25,240	25,310	25,390	25,460	25,540	25,610	25,690	25,760	25,840	25,910	25,990	26,060	26,130	26,210	26,280	26,350	26,420	26,500	26,570	26,640	10
11	27,870	27,950	28,030	28,120	28,200	28,280	28,360	28,450	28,530	28,610	28,690	28,770	28,850	28,930	29,010	29,090	29,170	29,250	29,330	29,410	29,490	11
12	31,080	31,170	31,260	31,350	31,440	31,530	31,620	31,710	31,800	31,890	31,980	32,070	32,160	32,250	32,340	32,420	32,510	32,600	32,690	32,780	32,860	12
13	34,360	34,460	34,560	34,660	34,760	34,860	34,960	35,060	35,160	35,260	35,350	35,450	35,550	35,650	35,750	35,840	35,940	36,040	36,130	36,230	36,330	13
14	37,690	37,800	37,910	38,020	38,130	38,240	38,350	38,460	38,570	38,680	38,790	38,900	39,000	39,110	39,220	39,330	39,430	39,540	39,650	39,750	39,860	14
15	41,110	41,230	41,350	41,470	41,580	41,700	41,820	41,940	42,060	42,170	42,290	42,410	42,520	42,640	42,760	42,870	42,990	43,100	43,220	43,330	43,450	15
16	44,530	44,660	44,790	44,920	45,040	45,170	45,300	45,430	45,550	45,680	45,810	45,930	46,060	46,190	46,310	46,440	46,560	46,690	46,810	46,940	47,060	16
17	50,300	50,440	50,580	50,720	50,850	50,990	51,130	51,270	51,400	51,540	51,670	51,810	51,940	52,080	52,210	52,350	52,480	52,620	52,750	52,880	53,020	17
18	56,070	56,220	56,370	56,520	56,660	56,810	56,960	57,100	57,250	57,390	57,540	57,680	57,830	57,970	58,120	58,260	58,400	58,550	58,690	58,830	58,970	18
19	61,840	62,000	62,160	62,320	62,470	62,630	62,790	62,940	63,100	63,250	63,410	63,560	63,710	63,870	64,020	64,170	64,320	64,470	64,620	64,770	64,920	19
20	66,890	67,050	67,210	67,370	67,520	67,680	67,840	68,000	68,150	68,310	68,470	68,620	68,780	68,930	69,080	69,240	69,390	69,540	69,690	69,840	70,000	20
21	71,930	72,100	72,260	72,420	72,580	72,740	72,890	73,050	73,210	73,370	73,530	73,680	73,840	73,990	74,150	74,300	74,460	74,610	74,760	74,920	75,070	21
22	76,980	77,140	77,310	77,470	77,630	77,790	77,950	78,110	78,270	78,430	78,590	78,740	78,900	79,060	79,210	79,370	79,520	79,680	79,830	79,990	80,140	22
23	80,770	81,020	81,260	81,510	81,760	82,010	82,250	82,500	82,750	83,000	83,240	83,490	83,730	83,980	84,230	84,470	84,720	84,960	85,210	85,450	85,690	23
24	84,550	84,890	85,220	85,560	85,890	86,230	86,560	86,890	87,230	87,560	87,900	88,230	88,570	88,900	89,240	89,570	89,910	90,240	90,580	90,910	91,250	24
25	88,340	88,760	89,180	89,600	90,020	90,440	90,860	91,290	91,710	92,130	92,550	92,980	93,400	93,830	94,250	94,670	95,100	95,530	95,950	96,380	96,800	25
26	88,340	88,760	89,180	89,600	90,020	90,440	90,860	91,290	91,710	92,130	92,550	92,980	93,400	93,830	94,250	94,670	95,100	95,530	95,950	96,380	96,800	26
27	88,340	88,760	89,180	89,600	90,020	90,440	90,860	91,290	91,710	92,130	92,550	92,980	93,400	93,830	94,250	94,670	95,100	95,530	95,950	96,380	96,800	27
28	88,340	88,760	89,180	89,600	90,020	90,440	90,860	91,290	91,710	92,130	92,550	92,980	93,400	93,830	94,250	94,670	95,100	95,530	95,950	96,380	96,800	28

HEADWATER ELEVATION

GATE ARRANGEMENT	810.0	810.1	810.2	810.3	810.4	810.5	810.6	810.7	810.8	810.9	811.0	811.1	811.2	811.3	811.4	811.5	811.6	811.7	811.8	811.9	812.0	GATE ARRANGEMENT
1	2,210	2,220	2,220	2,230	2,240	2,240	2,250	2,260	2,260	2,270	2,270	2,280	2,290	2,290	2,300	2,300	2,310	2,310	2,320	2,330	2,330	1
2	4,760	4,770	4,780	4,800	4,810	4,820	4,840	4,850	4,860	4,880	4,890	4,900	4,910	4,930	4,940	4,950	4,970	4,980	4,990	5,000	5,020	2
3	7,330	7,360	7,380	7,400	7,420	7,440	7,460	7,480	7,500	7,520	7,540	7,560	7,580	7,600	7,610	7,630	7,650	7,670	7,690	7,710	7,730	3
4	10,020	10,050	10,080	10,110	10,140	10,170	10,190	10,220	10,250	10,280	10,310	10,330	10,360	10,390	10,420	10,450	10,470	10,500	10,530	10,560	10,580	4
5	12,800	12,830	12,870	12,910	12,940	12,980	13,020	13,050	13,090	13,120	13,160	13,200	13,230	13,270	13,300	13,340	13,370	13,410	13,440	13,480	13,510	5
6	15,300	15,350	15,390	15,430	15,480	15,520	15,570	15,610	15,650	15,700	15,740	15,790	15,830	15,870	15,920	15,960	16,000	16,040	16,090	16,130	16,170	6
7	18,130	18,180	18,240	18,290	18,340	18,390	18,440	18,490	18,540	18,600	18,650	18,700	18,750	18,800	18,850	18,900	18,950	19,000	19,050	19,100	19,150	7
8	20,880	20,930	20,990	21,050	21,110	21,170	21,230	21,280	21,340	21,400	21,460	21,510	21,570	21,630	21,680	21,740	21,800	21,860	21,910	21,970	22,030	8
9	23,770	23,840	23,900	23,970	24,040	24,100	24,170	24,230	24,300	24,360	24,430	24,490	24,550	24,620	24,680	24,750	24,810	24,880	24,940	25,000	25,070	9
10	26,640	26,710	26,790	26,860	26,930	27,000	27,070	27,140	27,220	27,290	27,360	27,430	27,500	27,570	27,640	27,710	27,780	27,850	27,920	27,990	28,060	10
11	29,490	29,570	29,640	29,720	29,800	29,880	29,960	30,030	30,110	30,190	30,270	30,350	30,420	30,500	30,580	30,650	30,730	30,810	30,890	30,960	31,040	11
12	32,860	32,950	33,040	33,120	33,210	33,300	33,380	33,470	33,560	33,640	33,730	33,810	33,900	33,980	34,070	34,160	34,240	34,330	34,410	34,500	34,580	12
13	36,330	36,420	36,520	36,620	36,710	36,810	36,900	37,000	37,090	37,190	37,280	37,380	37,470	37,570	37,660	37,760	37,850	37,940	38,040	38,130	38,230	13
14	39,860	39,970	40,070	40,180	40,280	40,390	40,490	40,600	40,700	40,810	40,910	41,020	41,120	41,220	41,330	41,430	41,530	41,640	41,740	41,840	41,940	14
15	43,450	43,560	43,680	43,790	43,910	44,020	44,130	44,250	44,360	44,470	44,590	44,700	44,810	44,920	45,030	45,150	45,260	45,370	45,480	45,590	45,700	15
16	47,060	47,190	47,310	47,440	47,560	47,680	47,810	47,930	48,050	48,170	48,300	48,420	48,540	48,660	48,780	48,910	49,030	49,150	49,270	49,390	49,510	16
17	53,020	53,150	53,280	53,410	53,550	53,680	53,810	53,940	54,070	54,200	54,330	54,460	54,590	54,720	54,850	54,980	55,110	55,240	55,370	55,490	55,620	17
18	58,970	59,110	59,250	59,390	59,530	59,670	59,810	59,950	60,090	60,230	60,370	60,510	60,640	60,780	60,920	61,050	61,190	61,330	61,460	61,600	61,730	18
19	64,920	65,070	65,220	65,370	65,520	65,670	65,820	65,960	66,110	66,260	66,400	66,550	66,690	66,840	66,980	67,130	67,270	67,420	67,560	67,700	67,850	19
20	70,000	70,150	70,300	70,450	70,600	70,740	70,890	71,040	71,190	71,340	71,480	71,630	71,780	71,920	72,070	72,210	72,360	72,500	72,650	72,790	72,930	20
21	75,070	75,220	75,370	75,520	75,670	75,820	75,970	76,120	76,270	76,420	76,560	76,710	76,860	77,000	77,150	77,300	77,440	77,590	77,730	77,870	78,020	21
22	80,140	80,290	80,440	80,600	80,750	80,900	81,050	81,200	81,350	81,490	81,640	81,790	81,940	82,090	82,230	82,380	82,520	82,670	82,810	82,960	83,100	22
23	85,690	85,940	86,180	86,430	86,670	86,910	87,160	87,360	87,520	87,670	87,830	87,980	88,130	88,280	88,440	88,590	88,740	88,890	89,040	89,180	89,330	23
24	91,250	91,590	91,920	92,260	92,590	92,930	93,260	93,530	93,690	93,850	94,010	94,170	94,330	94,480	94,640	94,800	94,950	95,100	95,260	95,410	95,560	24
25	96,800	97,230	97,660	98,090	98,520	98,940	99,370	99,700	99,860	100,000	100,200	100,400	100,500	100,700	100,800	101,000	101,200	101,300	101,500	101,600	101,800	25
26	96,800	97,230	97,660	98,090	98,520	98,940	99,370	99,730	99,990	100,200	100,500	100,700	101,000	101,300	101,500	101,800	102,000	102,300	102,500	102,800	103,000	26
27	96,800	97,230	97,660	98,090	98,520	98,940	99,370	99,770	100,100	100,500	100,800	101,100	101,500	101,800	102,200	102,500	102,800	103,200	103,500	103,900	104,200	27
28	96,800	97,230	97,660	98,090	98,520	98,940	99,370	99,800	100,200	100,700	101,100	101,500	102,000	102,400	102,800	103,300	103,700	104,100	104,600	105,000	105,400	28

HEADWATER 808 to 812
TAILWATER 791.51 to 792.5

MAY 2008

TELLICO DAM
SPILLWAY DISCHARGE
IN CUBIC FEET PER SECOND

GATE ARRANGEMENT	HEADWATER ELEVATION																				GATE ARRANGEMENT
	812.0	812.1	812.2	812.3	812.4	812.5	812.6	812.7	812.8	812.9	813.0	813.1	813.2	813.3	813.4	813.5	813.6	813.7	813.8	813.9	814.0	
1	2,330	2,340	2,340	2,350	2,360	2,360	2,370	2,370	2,380	2,380	2,390	2,400	2,400	2,410	2,410	2,420	2,420	2,430	2,430	2,440	2,450	1
2	5,020	5,030	5,040	5,050	5,070	5,080	5,090	5,100	5,120	5,130	5,140	5,150	5,160	5,180	5,190	5,200	5,210	5,220	5,240	5,250	5,260	2
3	7,730	7,750	7,770	7,790	7,810	7,830	7,850	7,870	7,880	7,900	7,920	7,940	7,960	7,980	8,000	8,020	8,030	8,050	8,070	8,090	8,110	3
4	10,580	10,610	10,640	10,670	10,690	10,720	10,750	10,770	10,800	10,830	10,860	10,880	10,910	10,940	10,960	10,990	11,020	11,040	11,070	11,100	11,120	4
5	13,510	13,550	13,580	13,620	13,650	13,690	13,720	13,760	13,790	13,830	13,860	13,890	13,930	13,960	14,000	14,030	14,070	14,100	14,130	14,170	14,200	5
6	16,170	16,220	16,260	16,300	16,340	16,380	16,430	16,470	16,510	16,550	16,590	16,640	16,680	16,720	16,760	16,800	16,840	16,880	16,920	16,960	17,010	6
7	19,150	19,200	19,250	19,300	19,350	19,400	19,440	19,490	19,540	19,590	19,640	19,690	19,740	19,780	19,830	19,880	19,930	19,980	20,020	20,070	20,120	7
8	22,030	22,080	22,140	22,190	22,250	22,310	22,360	22,420	22,470	22,530	22,580	22,640	22,690	22,750	22,800	22,860	22,910	22,970	23,020	23,070	23,130	8
9	25,070	25,130	25,190	25,260	25,320	25,380	25,450	25,510	25,570	25,630	25,700	25,760	25,820	25,880	25,940	26,010	26,070	26,130	26,190	26,250	26,310	9
10	28,060	28,130	28,210	28,280	28,350	28,420	28,490	28,550	28,620	28,690	28,760	28,830	28,900	28,970	29,040	29,110	29,180	29,250	29,320	29,390	29,450	10
11	31,040	31,120	31,190	31,270	31,350	31,420	31,500	31,580	31,650	31,730	31,810	31,880	31,960	32,030	32,110	32,190	32,260	32,340	32,410	32,490	32,560	11
12	34,580	34,670	34,750	34,840	34,920	35,010	35,090	35,180	35,260	35,350	35,430	35,520	35,600	35,690	35,770	35,860	35,940	36,020	36,110	36,190	36,280	12
13	38,230	38,320	38,410	38,510	38,600	38,700	38,790	38,880	38,980	39,070	39,160	39,260	39,350	39,440	39,530	39,630	39,720	39,810	39,900	40,000	40,090	13
14	41,940	42,050	42,150	42,250	42,350	42,450	42,550	42,660	42,760	42,860	42,960	43,060	43,160	43,260	43,360	43,460	43,560	43,660	43,760	43,860	43,950	14
15	45,700	45,810	45,920	46,030	46,150	46,260	46,370	46,480	46,590	46,690	46,800	46,910	47,020	47,130	47,240	47,350	47,460	47,570	47,670	47,780	47,890	15
16	49,510	49,630	49,750	49,870	49,990	50,110	50,230	50,350	50,470	50,590	50,700	50,820	50,940	51,060	51,180	51,290	51,410	51,530	51,650	51,760	51,880	16
17	55,620	55,750	55,880	56,000	56,130	56,260	56,380	56,510	56,640	56,760	56,890	57,010	57,140	57,260	57,390	57,510	57,640	57,760	57,880	58,000	58,130	17
18	61,730	61,870	62,000	62,140	62,270	62,410	62,540	62,670	62,810	62,940	63,070	63,200	63,340	63,470	63,600	63,730	63,860	63,990	64,120	64,250	64,370	18
19	67,850	67,990	68,130	68,270	68,410	68,560	68,700	68,840	68,980	69,120	69,260	69,390	69,530	69,670	69,810	69,940	70,080	70,220	70,350	70,490	70,620	19
20	72,930	73,080	73,220	73,370	73,520	73,660	73,810	73,950	74,090	74,240	74,380	74,520	74,670	74,810	74,950	75,090	75,230	75,370	75,510	75,650	75,790	20
21	78,020	78,170	78,320	78,470	78,620	78,770	78,910	79,060	79,210	79,360	79,510	79,650	79,800	79,940	80,090	80,230	80,380	80,520	80,670	80,810	80,950	21
22	83,100	83,260	83,410	83,560	83,720	83,870	84,020	84,180	84,330	84,480	84,630	84,780	84,930	85,080	85,230	85,380	85,530	85,680	85,830	85,970	86,120	22
23	89,330	89,460	89,600	89,730	89,860	89,990	90,120	90,250	90,380	90,510	90,640	90,760	90,890	91,020	91,140	91,270	91,390	91,510	91,640	91,760	91,880	23
24	95,560	95,670	95,780	95,900	96,010	96,110	96,220	96,330	96,440	96,540	96,650	96,750	96,850	96,950	97,050	97,150	97,250	97,350	97,450	97,550	97,640	24
25	101,800	101,900	102,000	102,100	102,100	102,200	102,300	102,400	102,500	102,600	102,700	102,700	102,800	102,900	103,000	103,000	103,100	103,200	103,300	103,300	103,400	25
26	103,000	103,200	103,400	103,600	103,800	104,000	104,200	104,400	104,600	104,800	105,000	105,200	105,400	105,600	105,800	106,000	106,200	106,400	106,600	106,800	107,000	26
27	104,200	104,500	104,900	105,200	105,500	105,800	106,100	106,500	106,800	107,100	107,400	107,700	108,100	108,400	108,700	109,000	109,300	109,600	110,000	110,300	110,600	27
28	105,400	105,900	106,300	106,700	107,200	107,600	108,000	108,500	108,900	109,400	109,800	110,200	110,700	111,100	111,600	112,000	112,400	112,900	113,300	113,800	114,200	28

GATE ARRANGEMENT	HEADWATER ELEVATION																				GATE ARRANGEMENT
	814.0	814.1	814.2	814.3	814.4	814.5	814.6	814.7	814.8	814.9	815.0	815.1	815.2	815.3	815.4	815.5	815.6	815.7	815.8	815.9	816.0	
1	2,450	2,450	2,460	2,460	2,470	2,470	2,480	2,480	2,490	2,500	2,500	2,510	2,510	2,520	2,520	2,530						1
2	5,260	5,270	5,280	5,300	5,310	5,320	5,330	5,340	5,360	5,370	5,380	5,390	5,400	5,410	5,430	5,440	5,450	5,460	5,470	5,480	5,490	2
3	8,110	8,130	8,150	8,160	8,180	8,200	8,220	8,240	8,260	8,270	8,290	8,310	8,330	8,350	8,360	8,380	8,400	8,420	8,430	8,450	8,470	3
4	11,120	11,150	11,180	11,200	11,230	11,260	11,280	11,310	11,340	11,360	11,390	11,420	11,440	11,470	11,500	11,520	11,550	11,580	11,600	11,630	11,660	4
5	14,200	14,230	14,270	14,300	14,340	14,370	14,400	14,440	14,470	14,500	14,540	14,570	14,600	14,640	14,670	14,700	14,740	14,770	14,800	14,840	14,870	5
6	17,010	17,050	17,090	17,130	17,170	17,210	17,250	17,290	17,330	17,370	17,410	17,450	17,490	17,530	17,570	17,610	17,650	17,690	17,730	17,770	17,810	6
7	20,120	20,170	20,210	20,260	20,310	20,350	20,400	20,450	20,490	20,540	20,590	20,630	20,680	20,730	20,770	20,820	20,860	20,910	20,960	21,000	21,050	7
8	23,130	23,180	23,240	23,290	23,340	23,400	23,450	23,500	23,560	23,610	23,660	23,710	23,770	23,820	23,870	23,920	23,980	24,030	24,080	24,130	24,180	8
9	26,310	26,370	26,440	26,500	26,560	26,620	26,680	26,740	26,800	26,860	26,920	26,980	27,040	27,100	27,160	27,220	27,280	27,330	27,390	27,450	27,510	9
10	29,450	29,520	29,590	29,660	29,730	29,800	29,860	29,930	30,000	30,070	30,130	30,200	30,270	30,330	30,400	30,470	30,530	30,600	30,670	30,730	30,800	10
11	32,560	32,640	32,720	32,790	32,870	32,940	33,010	33,090	33,160	33,240	33,310	33,390	33,460	33,530	33,610	33,680	33,750	33,820	33,900	33,970	34,040	11
12	36,280	36,360	36,440	36,530	36,610	36,690	36,780	36,860	36,940	37,020	37,110	37,190	37,270	37,350	37,430	37,510	37,600	37,680	37,760	37,840	37,920	12
13	40,090	40,180	40,270	40,360	40,450	40,550	40,640	40,730	40,820	40,910	41,000	41,090	41,180	41,270	41,360	41,450	41,540	41,630	41,720	41,800	41,890	13
14	43,950	44,050	44,150	44,250	44,350	44,450	44,550	44,640	44,740	44,840	44,940	45,030	45,130	45,230	45,330	45,420	45,520	45,620	45,710	45,810	45,910	14
15	47,890	48,000	48,110	48,210	48,320	48,430	48,540	48,640	48,750	48,860	48,960	49,070	49,180	49,280	49,390	49,500	49,600	49,710	49,820	49,920	50,030	15
16	51,880	52,000	52,110	52,230	52,350	52,460	52,580	52,700	52,810	52,930	53,040	53,160	53,270	53,390	53,500	53,620	53,730	53,850	53,960	54,080	54,190	16
17	58,130	58,250	58,370	58,490	58,620	58,740	58,860	58,980	59,100	59,220	59,340	59,460	59,580	59,700	59,810	59,930	60,050	60,170	60,290	60,400	60,520	17
18	64,370	64,500	64,630	64,760	64,880	65,010	65,140	65,260	65,390	65,510	65,630	65,760	65,880	66,000	66,130	66,250	66,370	66,490	66,610	66,730	66,840	18
19	70,620	70,750	70,890	71,020	71,150	71,280	71,410	71,540	71,670	71,800	71,930	72,060	72,180	72,310	72,440	72,560	72,680	72,810	72,930	73,050	73,170	19
20	75,790	75,930	76,060	76,200	76,340	76,470	76,610	76,740	76,880	77,010	77,150	77,280	77,410	77,540	77,670	77,810	77,940	78,060	78,190	78,320	78,450	20
21	80,950	81,100	81,240	81,380	81,520	81,660	81,800	81,950	82,080	82,220	82,360	82,500	82,640	82,780	82,910	83,050	83,190	83,320	83,460	83,590	83,730	21
22	86,120	86,270	86,420	86,560	86,710	86,850	87,000	87,150	87,290	87,430	87,580	87,720	87,870	88,010	88,150	88,300	88,440	88,580	88,720	88,860	89,010	22
23	91,880	92,020	92,150	92,280	92,410	92,540	92,670	92,800	92,930	93,060	93,190	93,320	93,450	93,570	93,700	93,830	93,950	94,080	94,200	94,330	94,450	23
24	97,640	97,760	97,880	98,000	98,120	98,230	98,350	98,460	98,580	98,690	98,800	98,920	99,030	99,140	99,250	99,360	99,470	99,580	99,680	99,790	99,900	24
25	103,400	103,500	103,600	103,700	103,800	103,900	104,000	104,100	104,200	104,300	104,400	104,500	104,600	104,700	104,800	104,900	105,000	105,100	105,200	105,300	105,300	25
26	107,000	107,200	107,400	107,700	107,900	108,100	108,300	108,500	108,700	108,900	109,900	109,900	110,000	110,100	110,100	110,200	110,300	110,300	110,400	110,400	110,500	26
27	110,600	110,900	111,300	111,600	111,900	112,300	112,600	112,900	113,200	113,600	115,300	115,400	115,400	115,400	115,500	115,500	115,500	115,600	115,600	115,600	115,700	27
28	114,200	114,600	115,100	115,500	116,000	116,400	116,900	117,300	117,800	118,200	120,800	120,800	120,800	120,800	120,800	120,800	120,800	120,800	120,800	120,800	120,800	28

MAY 2008

See special instruction for preventing gate overflow on page 2.

HEADWATER 812 to 816
TAILWATER 791.51 to 792.5

TELLICO DAM
SPILLWAY DISCHARGE
IN CUBIC FEET PER SECOND

HEADWATER ELEVATION

GATE ARRANGEMENT	816.0	816.1	816.2	816.3	816.4	816.5	816.6	816.7	816.8	816.9	817.0	817.1	817.2	817.3	817.4	817.5	817.6	817.7	817.8	817.9	818.0	GATE ARRANGEMENT
1																						1
2	5,490	5,510	5,520																			2
3	8,470	8,490	8,500	8,520	8,540	8,560	8,570	8,590	8,610	8,630	8,640											3
4	11,660	11,680	11,710	11,740	11,760	11,790	11,820	11,840	11,870	11,900	11,920	12,130	12,500	12,970	13,520	14,150	14,850	15,610				4
5	14,870	14,900	14,940	14,970	15,000	15,030	15,070	15,100	15,130	15,170	15,200	15,420	15,790	16,260	16,820	17,460	18,160	18,930	19,760	20,640	21,570	5
6	17,810	17,850	17,890	17,930	17,970	18,010	18,050	18,090	18,130	18,170	18,210	18,430	18,810	19,290	19,860	20,500	21,210	21,980	22,810	23,700	24,650	6
7	21,050	21,090	21,140	21,180	21,230	21,270	21,320	21,360	21,410	21,450	21,500	21,730	22,110	22,600	23,170	23,820	24,530	25,310	26,150	27,040	27,990	7
8	24,180	24,240	24,290	24,340	24,390	24,440	24,490	24,540	24,590	24,650	24,700	24,930	25,320	25,810	26,390	27,040	27,760	28,550	29,390	30,290	31,240	8
9	27,510	27,570	27,630	27,690	27,740	27,800	27,860	27,920	27,970	28,030	28,090	28,330	28,730	29,230	29,810	30,470	31,200	31,990	32,840	33,740	34,700	9
10	30,800	30,860	30,930	30,990	31,060	31,120	31,190	31,250	31,310	31,380	31,440	31,690	32,090	32,600	33,190	33,850	34,590	35,380	36,240	37,150	38,110	10
11	34,040	34,110	34,180	34,250	34,330	34,400	34,470	34,540	34,610	34,680	34,750	35,000	35,410	35,920	36,520	37,190	37,930	38,730	39,590	40,510	41,480	11
12	37,920	38,000	38,080	38,160	38,230	38,310	38,390	38,470	38,550	38,630	38,700	38,970	39,380	39,900	40,510	41,190	41,930	42,740	43,610	44,540	45,520	12
13	41,890	41,980	42,070	42,160	42,240	42,330	42,420	42,500	42,590	42,680	42,760	43,030	43,460	43,990	44,600	45,290	46,040	46,860	47,740	48,670	49,660	13
14	45,910	46,000	46,100	46,190	46,290	46,390	46,480	46,580	46,670	46,770	46,860	47,140	47,580	48,120	48,740	49,440	50,200	51,030	51,920	52,860	53,860	14
15	50,030	50,130	50,240	50,350	50,450	50,560	50,660	50,770	50,870	50,980	51,080	51,370	51,820	52,360	53,000	53,700	54,480	55,320	56,210	57,170	58,170	15
16	54,190	54,310	54,420	54,530	54,650	54,760	54,880	54,990	55,100	55,220	55,330	55,630	56,080	56,640	57,280	57,990	58,780	59,620	60,530	61,490	62,510	16
17	60,520	60,630	60,750	60,870	60,980	61,100	61,210	61,320	61,440	61,550	61,660	61,960	62,410	62,970	63,610	64,320	65,100	65,950	66,850	67,810	68,830	17
18	66,840	66,960	67,080	67,200	67,310	67,430	67,540	67,660	67,770	67,890	68,000	68,300	68,750	69,300	69,940	70,650	71,430	72,280	73,180	74,140	75,150	18
19	73,170	73,290	73,410	73,530	73,640	73,760	73,880	73,990	74,110	74,220	74,330	74,630	75,080	75,630	76,270	76,980	77,760	78,600	79,500	80,460	81,470	19
20	78,450	78,580	78,710	78,830	78,960	79,090	79,210	79,340	79,460	79,590	79,710	80,020	80,480	81,050	81,700	82,420	83,210	84,060	84,980	85,940	86,970	20
21	83,730	83,870	84,000	84,140	84,280	84,420	84,550	84,690	84,820	84,960	85,090	85,410	85,880	86,460	87,120	87,860	88,660	89,520	90,450	91,430	92,460	21
22	89,010	89,150	89,300	89,450	89,600	89,740	89,890	90,040	90,180	90,330	90,470	90,800	91,290	91,870	92,550	93,290	94,110	94,980	95,920	96,910	97,960	22
23	94,450	94,600	94,740	94,880	95,020	95,170	95,310	95,450	95,590	95,730	95,870	96,200	96,680	97,260	97,920	98,670	99,470	100,300	101,300	102,300	103,300	23
24	99,900	100,000	100,200	100,300	100,500	100,600	100,700	100,900	101,000	101,100	101,300	101,600	102,100	102,600	103,300	104,000	104,800	105,700	106,600	107,600	108,600	24
25	105,300	105,500	105,600	105,700	105,900	106,000	106,100	106,300	106,400	106,500	106,700	107,000	107,500	108,000	108,700	109,400	110,200	111,100	112,000	113,000	114,000	25
26	110,500	110,600	110,700	110,800	110,900	111,000	111,100	111,200	111,200	111,300	111,400	111,700	112,100	112,700	113,300	114,000	114,700	115,600	116,400	117,400	118,400	26
27	115,700	115,700	115,800	115,800	115,900	115,900	116,000	116,000	116,100	116,100	116,200	116,400	116,800	117,300	117,900	118,500	119,300	120,100	120,900	121,800	122,700	27
28	120,800	120,800	120,900	120,900	120,900	120,900	120,900	120,900	120,900	120,900	120,900	121,100	121,500	121,900	122,500	123,100	123,800	124,500	125,300	126,200	127,100	28

HEADWATER ELEVATION

GATE ARRANGEMENT	818.0	818.1	818.2	818.3	818.4	818.5	818.6	818.7	818.8	818.9	819.0	819.1	819.2	819.3	819.4	819.5	819.6	819.7	819.8	819.9	820.0	GATE ARRANGEMENT
1																						1
2																						2
3																						3
4																						4
5	21,570	22,560	23,600	24,690	25,820																	5
6	24,650	25,640	26,680	27,780	28,920	30,110	31,340	32,610	33,930	35,300	36,700	38,150										6
7	27,990	28,990	30,040	31,140	32,280	33,470	34,710	35,990	37,320	38,690	40,090	41,550	43,040	44,570	46,140	47,750	49,400	51,080	52,800			7
8	31,240	32,250	33,300	34,410	35,560	36,760	38,000	39,280	40,610	41,990	43,400	44,860	46,350	47,890	49,470	51,080	52,730	54,430	56,150	57,920	59,720	8
9	34,700	35,710	36,780	37,890	39,040	40,250	41,500	42,790	44,130	45,510	46,930	48,390	49,890	51,440	53,020	54,640	56,300	58,000	59,730	61,500	63,310	9
10	38,110	39,130	40,200	41,320	42,480	43,690	44,940	46,240	47,580	48,970	50,400	51,860	53,370	54,920	56,510	58,140	59,800	61,500	63,240	65,020	66,840	10
11	41,480	42,500	43,580	44,700	45,870	47,080	48,340	49,650	51,000	52,390	53,820	55,290	56,810	58,360	59,950	61,590	63,260	64,960	66,710	68,490	70,310	11
12	45,520	46,550	47,630	48,760	49,930	51,160	52,430	53,740	55,090	56,490	57,930	59,410	60,930	62,500	64,100	65,740	67,410	69,130	70,890	72,680	74,500	12
13	49,660	50,700	51,790	52,930	54,110	55,340	56,620	57,940	59,310	60,710	62,160	63,650	65,180	66,750	68,360	70,010	71,700	73,420	75,190	76,990	78,820	13
14	53,860	54,910	56,010	57,160	58,350	59,590	60,880	62,210	63,590	65,000	66,460	67,960	69,510	71,090	72,710	74,370	76,060	77,800	79,570	81,380	83,230	14
15	58,170	59,230	60,340	61,500	62,710	63,960	65,260	66,600	67,980	69,410	70,880	72,390	73,940	75,530	77,160	78,830	80,540	82,290	84,070	85,890	87,750	15
16	62,510	63,570	64,690	65,860	67,070	68,330	69,640	70,990	72,380	73,820	75,290	76,810	78,370	79,970	81,610	83,290	85,000	86,760	88,550	90,380	92,240	16
17	68,830	69,890	71,010	72,170	73,380	74,640	75,940	77,290	78,680	80,110	81,590	83,100	84,660	86,250	87,890	89,560	91,270	93,020	94,810	96,640	98,500	17
18	75,150	76,210	77,330	78,490	79,700	80,950	82,250	83,590	84,980	86,410	87,880	89,390	90,940	92,540	94,170	95,840	97,550	99,290	101,100	102,900	104,800	18
19	81,470	82,530	83,640	84,800	86,010	87,260	88,560	89,900	91,280	92,710	94,170	95,680	97,230	98,820	100,400	102,100	103,800	105,600	107,300	109,200	111,000	19
20	86,970	88,040	89,160	90,340	91,550	92,820	94,130	95,480	96,880	98,320	99,800	101,300	102,900	104,500	106,100	107,800	109,500	111,300	113,100	114,900	116,800	20
21	92,460	93,550	94,680	95,870	97,100	98,380	99,700	101,100	102,500	103,900	105,400	107,000	108,500	110,100	111,800	113,500	115,200	117,000	118,800	120,600	122,500	21
22	97,960	99,060	100,200	101,400	102,600	103,900	105,300	106,600	108,100	109,500	111,000	112,600	114,200	115,800	117,500	119,200	120,900	122,700	124,500	126,400	128,300	22
23	103,300	104,400	105,600	106,800	108,000	109,300	110,700	112,000	113,500	114,900	116,500	118,000	119,600	121,200	122,900	124,600	126,400	128,200	130,000	131,800	133,700	23
24	108,600	109,800	110,900	112,100	113,400	114,700	116,000	117,400	118,900	120,300	121,900	123,400	125,000	126,700	128,300	130,100	131,800	133,600	135,400	137,300	139,200	24
25	114,000	115,100	116,300	117,500	118,800	120,100	121,400	122,800	124,300	125,800	127,300	128,800	130,500	132,100	133,800	135,500	137,300	139,100	140,900	142,800	144,700	25
26	118,400	119,500	120,700	121,900	123,200	124,500	125,900	127,300	128,800	130,300	131,800	133,400	135,000	136,700	138,400	140,100	141,900	143,700	145,500	147,400	149,400	26
27	122,700	123,900	125,100	126,300	127,600	129,000	130,400	131,800	133,300	134,800	136,300	137,900	139,600	141,200	143,000	144,700	146,500	148,300	150,200	152,100	154,000	27
28	127,100	128,300	129,500	130,800	132,100	133,400	134,800	136,300	137,800	139,300	140,900	142,500	144,100	145,800	147,500	149,300	151,100	153,000	154,800	156,800	158,700	28

HEADWATER 816 to 820
TAILWATER 791.51 to 792.5

See special instruction for preventing gate overflow on page 2.

MAY 2008

TELLICO DAM
SPILLWAY DISCHARGE
IN CUBIC FEET PER SECOND

HEADWATER ELEVATION

GATE ARRANGEMENT	800.0	800.1	800.2	800.3	800.4	800.5	800.6	800.7	800.8	800.9	801.0	801.1	801.2	801.3	801.4	801.5	801.6	801.7	801.8	801.9	802.0	GATE ARRANGEMENT
1	1,380	1,390	1,400	1,410	1,420	1,430	1,440	1,450	1,460	1,470	1,480	1,480	1,490	1,500	1,510	1,520	1,530	1,540	1,550	1,560	1,560	1
2	2,970	2,990	3,010	3,030	3,050	3,070	3,090	3,110	3,130	3,150	3,170	3,190	3,210	3,230	3,250	3,270	3,290	3,310	3,330	3,350	3,360	2
3	4,570	4,600	4,640	4,670	4,700	4,730	4,760	4,800	4,830	4,860	4,890	4,920	4,950	4,980	5,010	5,040	5,070	5,100	5,130	5,160	5,180	3
4	6,200	6,250	6,300	6,350	6,400	6,440	6,490	6,540	6,580	6,630	6,670	6,720	6,760	6,810	6,850	6,890	6,940	6,980	7,020	7,060	7,100	4
5	7,820	7,880	7,930	7,990	8,040	8,090	8,150	8,200	8,260	8,310	8,360	8,420	8,470	8,530	8,580	8,630	8,690	8,740	8,800	8,850	8,900	5
6	9,260	9,320	9,390	9,450	9,510	9,580	9,640	9,710	9,770	9,830	9,900	9,960	10,020	10,090	10,150	10,220	10,280	10,340	10,410	10,470	10,530	6
7	11,160	11,230	11,300	11,370	11,450	11,520	11,590	11,660	11,740	11,810	11,880	11,950	12,030	12,100	12,170	12,250	12,320	12,390	12,460	12,540	12,610	7
8	13,060	13,140	13,220	13,300	13,380	13,460	13,540	13,620	13,700	13,780	13,860	13,940	14,020	14,100	14,190	14,270	14,350	14,430	14,510	14,590	14,670	8
9	14,900	14,990	15,080	15,180	15,270	15,360	15,450	15,550	15,640	15,730	15,830	15,920	16,010	16,110	16,200	16,290	16,390	16,480	16,570	16,660	16,760	9
10	16,720	16,830	16,930	17,040	17,140	17,250	17,350	17,460	17,560	17,670	17,770	17,880	17,990	18,090	18,200	18,300	18,410	18,510	18,620	18,720	18,830	10
11	18,530	18,650	18,770	18,890	19,010	19,130	19,240	19,360	19,480	19,600	19,720	19,840	19,960	20,080	20,200	20,320	20,430	20,550	20,670	20,790	20,910	11
12	20,760	20,890	21,020	21,150	21,280	21,410	21,540	21,670	21,800	21,930	22,060	22,190	22,320	22,450	22,580	22,710	22,840	22,970	23,100	23,230	23,360	12
13	23,070	23,210	23,350	23,490	23,630	23,770	23,910	24,050	24,190	24,330	24,470	24,610	24,750	24,890	25,030	25,170	25,310	25,450	25,590	25,730	25,870	13
14	25,410	25,560	25,710	25,860	26,010	26,160	26,310	26,460	26,610	26,760	26,910	27,060	27,210	27,360	27,510	27,660	27,810	27,960	28,110	28,260	28,410	14
15	27,800	27,960	28,120	28,280	28,440	28,600	28,760	28,920	29,080	29,230	29,390	29,550	29,710	29,870	30,030	30,190	30,350	30,510	30,670	30,830	30,990	15
16	30,210	30,380	30,550	30,720	30,890	31,060	31,220	31,390	31,560	31,730	31,900	32,070	32,240	32,410	32,580	32,750	32,920	33,090	33,260	33,430	33,600	16
17	35,990	36,160	36,330	36,500	36,670	36,840	37,010	37,180	37,350	37,520	37,690	37,860	38,030	38,200	38,370	38,540	38,710	38,880	39,050	39,210	39,380	17
18	41,770	41,940	42,110	42,290	42,460	42,630	42,800	42,970	43,140	43,310	43,480	43,650	43,820	43,990	44,160	44,330	44,490	44,660	44,830	45,000	45,170	18
19	47,550	47,720	47,900	48,070	48,240	48,410	48,580	48,760	48,930	49,100	49,270	49,440	49,610	49,780	49,940	50,110	50,280	50,450	50,620	50,780	50,950	19
20	49,810	50,070	50,330	50,590	50,850	51,100	51,360	51,620	51,870	52,130	52,390	52,640	52,890	53,150	53,400	53,650	53,910	54,160	54,410	54,660	54,910	20
21	52,060	52,410	52,760	53,110	53,450	53,790	54,140	54,480	54,820	55,160	55,500	55,840	56,180	56,520	56,860	57,190	57,530	57,870	58,200	58,540	58,870	21
22	54,320	54,760	55,190	55,620	56,060	56,490	56,910	57,340	57,770	58,200	58,620	59,050	59,470	59,890	60,310	60,740	61,160	61,580	62,000	62,410	62,830	22
23	54,320	54,760	55,190	55,620	56,060	56,490	56,910	57,340	57,770	58,200	58,620	59,050	59,470	59,890	60,310	60,740	61,160	61,580	62,000	62,410	62,830	23
24	54,320	54,760	55,190	55,620	56,060	56,490	56,910	57,340	57,770	58,200	58,620	59,050	59,470	59,890	60,310	60,740	61,160	61,580	62,000	62,410	62,830	24
25	54,320	54,760	55,190	55,620	56,060	56,490	56,910	57,340	57,770	58,200	58,620	59,050	59,470	59,890	60,310	60,740	61,160	61,580	62,000	62,410	62,830	25
26	54,320	54,760	55,190	55,620	56,060	56,490	56,910	57,340	57,770	58,200	58,620	59,050	59,470	59,890	60,310	60,740	61,160	61,580	62,000	62,410	62,830	26
27	54,320	54,760	55,190	55,620	56,060	56,490	56,910	57,340	57,770	58,200	58,620	59,050	59,470	59,890	60,310	60,740	61,160	61,580	62,000	62,410	62,830	27
28	54,320	54,760	55,190	55,620	56,060	56,490	56,910	57,340	57,770	58,200	58,620	59,050	59,470	59,890	60,310	60,740	61,160	61,580	62,000	62,410	62,830	28

HEADWATER ELEVATION

GATE ARRANGEMENT	802.0	802.1	802.2	802.3	802.4	802.5	802.6	802.7	802.8	802.9	803.0	803.1	803.2	803.3	803.4	803.5	803.6	803.7	803.8	803.9	804.0	GATE ARRANGEMENT
1	1,560	1,570	1,580	1,590	1,600	1,610	1,620	1,620	1,630	1,640	1,650	1,660	1,670	1,670	1,680	1,690	1,700	1,710	1,710	1,720	1,730	1
2	3,360	3,380	3,400	3,420	3,440	3,460	3,480	3,490	3,510	3,530	3,550	3,560	3,580	3,600	3,620	3,630	3,650	3,670	3,690	3,700	3,720	2
3	5,180	5,210	5,240	5,270	5,300	5,330	5,350	5,380	5,410	5,440	5,460	5,490	5,520	5,550	5,570	5,600	5,630	5,650	5,680	5,710	5,730	3
4	7,100	7,150	7,190	7,230	7,270	7,310	7,350	7,380	7,420	7,460	7,500	7,540	7,580	7,610	7,650	7,690	7,720	7,760	7,800	7,830	7,870	4
5	8,900	8,960	9,010	9,060	9,120	9,170	9,220	9,280	9,330	9,380	9,430	9,480	9,540	9,590	9,640	9,690	9,740	9,790	9,840	9,890	9,940	5
6	10,530	10,600	10,660	10,720	10,790	10,850	10,910	10,970	11,040	11,100	11,160	11,220	11,280	11,350	11,410	11,470	11,530	11,590	11,650	11,710	11,770	6
7	12,610	12,680	12,750	12,830	12,900	12,970	13,040	13,110	13,180	13,260	13,330	13,400	13,470	13,540	13,610	13,680	13,750	13,820	13,890	13,960	14,020	7
8	14,670	14,750	14,830	14,910	14,990	15,070	15,150	15,230	15,310	15,390	15,470	15,550	15,620	15,700	15,780	15,860	15,940	16,010	16,090	16,170	16,240	8
9	16,760	16,850	16,940	17,030	17,130	17,220	17,310	17,400	17,490	17,580	17,670	17,770	17,860	17,950	18,030	18,120	18,210	18,300	18,390	18,480	18,560	9
10	18,830	18,930	19,040	19,140	19,250	19,350	19,450	19,560	19,660	19,760	19,870	19,970	20,070	20,170	20,270	20,370	20,470	20,570	20,670	20,770	20,870	10
11	20,910	21,030	21,140	21,260	21,380	21,490	21,610	21,730	21,840	21,960	22,070	22,190	22,300	22,410	22,520	22,640	22,750	22,860	22,970	23,080	23,180	11
12	23,360	23,480	23,610	23,740	23,870	24,000	24,120	24,250	24,380	24,500	24,630	24,750	24,880	25,000	25,120	25,240	25,370	25,490	25,610	25,730	25,850	12
13	25,870	26,000	26,140	26,280	26,420	26,560	26,690	26,830	26,970	27,100	27,240	27,370	27,500	27,640	27,770	27,900	28,030	28,160	28,290	28,420	28,550	13
14	28,410	28,550	28,700	28,850	29,000	29,150	29,290	29,440	29,590	29,730	29,880	30,020	30,170	30,310	30,450	30,590	30,740	30,880	31,020	31,160	31,300	14
15	30,990	31,150	31,300	31,460	31,620	31,780	31,930	32,090	32,250	32,400	32,560	32,710	32,870	33,020	33,170	33,320	33,480	33,630	33,780	33,930	34,070	15
16	33,600	33,770	33,930	34,100	34,270	34,440	34,600	34,770	34,940	35,100	35,270	35,430	35,590	35,760	35,920	36,080	36,240	36,400	36,560	36,720	36,880	16
17	39,380	39,550	39,720	39,890	40,050	40,220	40,390	40,550	40,720	40,880	41,050	41,210	41,380	41,540	41,700	41,870	42,030	42,190	42,350	42,510	42,670	17
18	45,170	45,330	45,500	45,670	45,840	46,000	46,170	46,340	46,500	46,670	46,830	47,000	47,160	47,330	47,490	47,650	47,820	47,980	48,140	48,310	48,470	18
19	50,950	51,120	51,290	51,450	51,620	51,790	51,950	52,120	52,280	52,450	52,610	52,780	52,950	53,110	53,280	53,440	53,600	53,770	53,930	54,100	54,260	19
20	54,910	55,160	55,410	55,660	55,910	56,160	56,410	56,660	56,910	57,160	57,410	57,660	57,910	58,150	58,400	58,650	58,900	59,150	59,390	59,640	59,890	20
21	58,870	59,210	59,540	59,870	60,210	60,540	60,870	61,210	61,540	61,870	62,200	62,530	62,870	63,200	63,530	63,860	64,190	64,520	64,850	65,180	65,510	21
22	62,830	63,250	63,670	64,090	64,500	64,920	65,330	65,750	66,170	66,580	67,000	67,410	67,830	68,240	68,660	69,070	69,480	69,900	70,310	70,730	71,140	22
23	62,830	63,250	63,670	64,090	64,500	64,920	65,330	65,750	66,170	66,580	67,000	67,410	67,830	68,240	68,660	69,070	69,480	69,900	70,310	70,730	71,140	23
24	62,830	63,250	63,670	64,090	64,500	64,920	65,330	65,750	66,170	66,580	67,000	67,410	67,830	68,240	68,660	69,070	69,480	69,900	70,310	70,730	71,140	24
25	62,830	63,250	63,670	64,090	64,500	64,920	65,330	65,750	66,170	66,580	67,000	67,410	67,830	68,240	68,660	69,070	69,480	69,900	70,310	70,730	71,140	25
26	62,830	63,250	63,670	64,090	64,500	64,920	65,330	65,750	66,170	66,580	67,000	67,410	67,830	68,240	68,660	69,070	69,480	69,900	70,310	70,730	71,140	26
27	62,830	63,250	63,670	64,090	64,500	64,920	65,330	65,750	66,170	66,580	67,000	67,410	67,830	68,240	68,660	69,070	69,480	69,900	70,310	70,730	71,140	27
28	62,830	63,250	63,670	64,090	64,500	64,920	65,330	65,750	66,170	66,580	67,000	67,410	67,830	68,240	68,660	69,070	69,480	69,900	70,310	70,730	71,140	28

MAY 2008

HEADWATER 800 to 804
TAILWATER 792.51 to 793.5

TELLICO DAM
SPILLWAY DISCHARGE
IN CUBIC FEET PER SECOND

HEADWATER ELEVATION

GATE ARRANGEMENT	804.0	804.1	804.2	804.3	804.4	804.5	804.6	804.7	804.8	804.9	805.0	805.1	805.2	805.3	805.4	805.5	805.6	805.7	805.8	805.9	806.0	GATE ARRANGEMENT
1	1,730	1,740	1,750	1,750	1,760	1,770	1,780	1,780	1,790	1,800	1,810	1,810	1,820	1,830	1,840	1,840	1,850	1,860	1,870	1,870	1,880	1
2	3,720	3,740	3,750	3,770	3,790	3,800	3,820	3,840	3,850	3,870	3,890	3,900	3,920	3,930	3,950	3,970	3,980	4,000	4,010	4,030	4,040	2
3	5,730	5,760	5,780	5,810	5,830	5,860	5,890	5,910	5,940	5,960	5,990	6,010	6,040	6,060	6,090	6,110	6,130	6,160	6,180	6,210	6,230	3
4	7,870	7,900	7,940	7,970	8,010	8,040	8,080	8,110	8,150	8,180	8,210	8,250	8,280	8,310	8,350	8,380	8,410	8,440	8,480	8,510	8,540	4
5	9,940	9,980	10,030	10,080	10,130	10,170	10,220	10,270	10,310	10,360	10,400	10,450	10,490	10,540	10,580	10,630	10,670	10,710	10,760	10,800	10,840	5
6	11,770	11,830	11,890	11,940	12,000	12,060	12,120	12,170	12,230	12,290	12,340	12,400	12,450	12,510	12,560	12,620	12,670	12,720	12,780	12,830	12,880	6
7	14,020	14,090	14,160	14,230	14,290	14,360	14,420	14,490	14,560	14,620	14,690	14,750	14,810	14,880	14,940	15,000	15,070	15,130	15,190	15,250	15,310	7
8	16,240	16,320	16,390	16,470	16,540	16,620	16,690	16,770	16,840	16,910	16,990	17,060	17,130	17,200	17,270	17,340	17,410	17,480	17,550	17,620	17,690	8
9	18,560	18,650	18,730	18,820	18,900	18,990	19,070	19,160	19,240	19,320	19,400	19,480	19,570	19,650	19,730	19,810	19,890	19,970	20,040	20,120	20,200	9
10	20,870	20,960	21,060	21,150	21,250	21,340	21,440	21,530	21,620	21,720	21,810	21,900	21,990	22,080	22,170	22,260	22,350	22,440	22,520	22,610	22,700	10
11	23,180	23,290	23,400	23,500	23,610	23,710	23,820	23,920	24,020	24,120	24,230	24,330	24,420	24,520	24,620	24,720	24,820	24,910	25,010	25,100	25,200	11
12	25,850	25,960	26,080	26,200	26,310	26,430	26,540	26,650	26,770	26,880	26,990	27,100	27,210	27,320	27,420	27,530	27,640	27,740	27,850	27,950	28,060	12
13	28,550	28,680	28,800	28,930	29,050	29,180	29,300	29,420	29,540	29,660	29,780	29,900	30,020	30,140	30,260	30,370	30,490	30,600	30,720	30,830	30,940	13
14	31,300	31,430	31,570	31,710	31,840	31,970	32,110	32,240	32,370	32,500	32,630	32,760	32,890	33,020	33,150	33,280	33,400	33,530	33,650	33,780	33,900	14
15	34,070	34,220	34,370	34,510	34,660	34,800	34,950	35,090	35,230	35,370	35,510	35,650	35,790	35,930	36,070	36,210	36,340	36,480	36,610	36,750	36,880	15
16	36,880	37,040	37,190	37,350	37,510	37,660	37,810	37,970	38,120	38,270	38,420	38,570	38,720	38,870	39,010	39,160	39,310	39,450	39,600	39,740	39,880	16
17	42,670	42,830	42,990	43,150	43,310	43,470	43,620	43,780	43,940	44,090	44,250	44,400	44,550	44,710	44,860	45,010	45,160	45,320	45,470	45,620	45,770	17
18	48,470	48,630	48,790	48,950	49,110	49,270	49,440	49,600	49,750	49,910	50,070	50,230	50,390	50,550	50,710	50,860	51,020	51,180	51,340	51,490	51,650	18
19	54,260	54,430	54,590	54,750	54,920	55,080	55,250	55,410	55,570	55,740	55,900	56,060	56,230	56,390	56,550	56,720	56,880	57,040	57,210	57,370	57,530	19
20	59,890	60,140	60,380	60,630	60,880	61,090	61,240	61,380	61,530	61,680	61,820	61,970	62,120	62,260	62,400	62,550	62,690	62,840	62,980	63,120	63,260	20
21	65,510	65,850	66,180	66,510	66,840	67,090	67,230	67,360	67,490	67,620	67,750	67,880	68,000	68,130	68,260	68,380	68,500	68,630	68,750	68,870	68,990	21
22	71,140	71,560	71,970	72,380	72,800	73,100	73,220	73,330	73,450	73,560	73,670	73,780	73,890	74,000	74,110	74,210	74,320	74,420	74,520	74,620	74,720	22
23	71,140	71,560	71,970	72,380	72,800	73,140	73,350	73,570	73,780	74,000	74,210	74,420	74,630	74,840	75,050	75,260	75,470	75,680	75,890	76,090	76,300	23
24	71,140	71,560	71,970	72,380	72,800	73,180	73,490	73,810	74,120	74,430	74,750	75,060	75,370	75,690	76,000	76,310	76,620	76,940	77,250	77,560	77,870	24
25	71,140	71,560	71,970	72,380	72,800	73,210	73,630	74,040	74,460	74,870	75,290	75,700	76,120	76,530	76,950	77,360	77,780	78,200	78,610	79,030	79,440	25
26	71,140	71,560	71,970	72,380	72,800	73,210	73,630	74,040	74,460	74,870	75,290	75,700	76,120	76,530	76,950	77,360	77,780	78,200	78,610	79,030	79,440	26
27	71,140	71,560	71,970	72,380	72,800	73,210	73,630	74,040	74,460	74,870	75,290	75,700	76,120	76,530	76,950	77,360	77,780	78,200	78,610	79,030	79,440	27
28	71,140	71,560	71,970	72,380	72,800	73,210	73,630	74,040	74,460	74,870	75,290	75,700	76,120	76,530	76,950	77,360	77,780	78,200	78,610	79,030	79,440	28

HEADWATER ELEVATION

GATE ARRANGEMENT	806.0	806.1	806.2	806.3	806.4	806.5	806.6	806.7	806.8	806.9	807.0	807.1	807.2	807.3	807.4	807.5	807.6	807.7	807.8	807.9	808.0	GATE ARRANGEMENT
1	1,880	1,890	1,890	1,900	1,910	1,920	1,920	1,930	1,940	1,940	1,950	1,960	1,970	1,970	1,980	1,990	1,990	2,000	2,010	2,010	2,020	1
2	4,040	4,060	4,080	4,090	4,110	4,120	4,140	4,150	4,170	4,180	4,200	4,210	4,230	4,240	4,260	4,270	4,290	4,300	4,310	4,330	4,340	2
3	6,230	6,250	6,280	6,300	6,330	6,350	6,370	6,400	6,420	6,440	6,470	6,490	6,510	6,530	6,560	6,580	6,600	6,630	6,650	6,670	6,690	3
4	8,540	8,570	8,600	8,630	8,670	8,700	8,730	8,760	8,790	8,820	8,850	8,880	8,910	8,940	8,970	9,000	9,030	9,060	9,090	9,120	9,150	4
5	10,840	10,880	10,920	10,970	11,010	11,050	11,090	11,130	11,170	11,210	11,250	11,290	11,330	11,370	11,410	11,450	11,490	11,530	11,570	11,610	11,650	5
6	12,880	12,940	12,990	13,040	13,090	13,150	13,200	13,250	13,300	13,350	13,400	13,450	13,500	13,550	13,600	13,650	13,700	13,750	13,800	13,850	13,900	6
7	15,310	15,380	15,440	15,500	15,560	15,620	15,680	15,740	15,800	15,850	15,910	15,970	16,030	16,090	16,150	16,200	16,260	16,320	16,380	16,430	16,490	7
8	17,690	17,760	17,830	17,900	17,970	18,030	18,100	18,170	18,230	18,300	18,370	18,430	18,500	18,560	18,630	18,690	18,760	18,820	18,890	18,950	19,010	8
9	20,200	20,280	20,350	20,430	20,510	20,580	20,660	20,730	20,810	20,880	20,960	21,030	21,100	21,180	21,250	21,320	21,390	21,470	21,540	21,610	21,680	9
10	22,700	22,780	22,870	22,950	23,040	23,120	23,210	23,290	23,370	23,460	23,540	23,620	23,700	23,780	23,860	23,940	24,020	24,100	24,180	24,260	24,340	10
11	25,200	25,290	25,380	25,480	25,570	25,660	25,750	25,840	25,930	26,020	26,110	26,200	26,290	26,380	26,460	26,550	26,640	26,720	26,810	26,900	26,980	11
12	28,060	28,160	28,260	28,370	28,470	28,570	28,670	28,770	28,870	28,970	29,070	29,160	29,260	29,360	29,450	29,550	29,650	29,740	29,840	29,930	30,020	12
13	30,940	31,050	31,170	31,280	31,390	31,500	31,610	31,720	31,820	31,930	32,040	32,150	32,250	32,360	32,460	32,570	32,670	32,780	32,880	32,990	33,090	13
14	33,900	34,020	34,140	34,260	34,390	34,510	34,630	34,740	34,860	34,980	35,100	35,220	35,330	35,450	35,560	35,680	35,790	35,910	36,020	36,130	36,250	14
15	36,880	37,020	37,150	37,280	37,410	37,540	37,670	37,800	37,930	38,060	38,180	38,310	38,440	38,560	38,690	38,810	38,940	39,060	39,190	39,310	39,430	15
16	39,880	40,030	40,170	40,310	40,450	40,590	40,730	40,870	41,010	41,140	41,280	41,420	41,550	41,690	41,820	41,960	42,090	42,230	42,360	42,490	42,630	16
17	45,770	45,920	46,060	46,210	46,360	46,510	46,660	46,800	46,950	47,090	47,240	47,390	47,530	47,670	47,820	47,960	48,110	48,250	48,390	48,530	48,680	17
18	51,650	51,810	51,960	52,120	52,270	52,430	52,580	52,740	52,890	53,050	53,200	53,350	53,510	53,660	53,810	53,970	54,120	54,270	54,420	54,580	54,730	18
19	57,530	57,700	57,860	58,020	58,180	58,350	58,510	58,670	58,830	59,000	59,160	59,320	59,480	59,650	59,810	59,970	60,130	60,290	60,460	60,620	60,780	19
20	63,260	63,400	63,540	63,680	63,810	63,950	64,080	64,220	64,350	64,490	64,620	64,760	64,890	65,020	65,160	65,290	65,420	65,550	65,680	65,810	65,940	20
21	68,990	69,110	69,220	69,330	69,440	69,550	69,660	69,770	69,880	69,980	70,090	70,190	70,300	70,400	70,510	70,610	70,710	70,810	70,910	71,010	71,110	21
22	74,720	74,810	74,900	74,980	75,070	75,150	75,230	75,320	75,400	75,480	75,550	75,630	75,710	75,780	75,850	75,930	76,000	76,070	76,140	76,210	76,270	22
23	76,300	76,500	76,690	76,890	77,080	77,280	77,470	77,670	77,860	78,050	78,240	78,430	78,630	78,820	79,000	79,190	79,380	79,570	79,760	79,940	80,130	23
24	77,870	78,180	78,490	78,790	79,100	79,410	79,710	80,020	80,320	80,630	80,930	81,240	81,540	81,850	82,150	82,460	82,760	83,070	83,370	83,680	83,980	24
25	79,440	79,860	80,280	80,700	81,110	81,530	81,950	82,370	82,790	83,210	83,620	84,040	84,460	84,880	85,300	85,730	86,150	86,570	86,990	87,410	87,830	25
26	79,440	79,860	80,280	80,700	81,110	81,530	81,950	82,370	82,790	83,210	83,620	84,040	84,460	84,880	85,300	85,730	86,150	86,570	86,990	87,410	87,830	26
27	79,440	79,860	80,280	80,700	81,110	81,530	81,950	82,370	82,790	83,210	83,620	84,040	84,460	84,880	85,300	85,730	86,150	86,570	86,990	87,410	87,830	27
28	79,440	79,860	80,280	80,700	81,110	81,530	81,950	82,370	82,790	83,210	83,620	84,040	84,460	84,880	85,300	85,730	86,150	86,570	86,990	87,410	87,830	28

HEADWATER 804 to 808
TAILWATER 792.51 to 793.5

MAY 2008

TELLICO DAM
SPILLWAY DISCHARGE
IN CUBIC FEET PER SECOND

HEADWATER ELEVATION

GATE ARRANGEMENT	808.0	808.1	808.2	808.3	808.4	808.5	808.6	808.7	808.8	808.9	809.0	809.1	809.2	809.3	809.4	809.5	809.6	809.7	809.8	809.9	810.0	GATE ARRANGEMENT
1	2,020	2,030	2,030	2,040	2,050	2,050	2,060	2,070	2,070	2,080	2,090	2,090	2,100	2,110	2,110	2,120	2,120	2,130	2,140	2,140	2,150	1
2	4,340	4,360	4,370	4,390	4,400	4,420	4,430	4,440	4,460	4,470	4,490	4,500	4,510	4,530	4,540	4,560	4,570	4,580	4,600	4,610	4,620	2
3	6,690	6,720	6,740	6,760	6,780	6,800	6,830	6,850	6,870	6,890	6,910	6,930	6,960	6,980	7,000	7,020	7,040	7,060	7,080	7,100	7,120	3
4	9,150	9,180	9,210	9,240	9,270	9,300	9,330	9,360	9,390	9,420	9,450	9,480	9,500	9,530	9,560	9,590	9,620	9,650	9,680	9,710	9,740	4
5	11,650	11,690	11,730	11,770	11,810	11,840	11,880	11,920	11,960	12,000	12,040	12,080	12,120	12,150	12,190	12,230	12,270	12,310	12,340	12,380	12,420	5
6	13,900	13,950	14,000	14,050	14,100	14,140	14,190	14,240	14,290	14,340	14,390	14,430	14,480	14,530	14,580	14,620	14,670	14,720	14,760	14,810	14,860	6
7	16,490	16,550	16,600	16,660	16,710	16,770	16,830	16,880	16,940	16,990	17,050	17,100	17,150	17,210	17,260	17,320	17,370	17,420	17,480	17,530	17,590	7
8	19,010	19,080	19,140	19,200	19,260	19,330	19,390	19,450	19,510	19,570	19,630	19,690	19,750	19,810	19,880	19,930	19,990	20,050	20,110	20,170	20,230	8
9	21,680	21,750	21,820	21,890	21,960	22,030	22,100	22,170	22,240	22,310	22,380	22,450	22,510	22,580	22,650	22,720	22,780	22,850	22,920	22,980	23,050	9
10	24,340	24,420	24,500	24,570	24,650	24,730	24,810	24,880	24,960	25,030	25,110	25,190	25,260	25,340	25,410	25,490	25,560	25,630	25,710	25,780	25,850	10
11	26,980	27,070	27,150	27,240	27,320	27,410	27,490	27,570	27,660	27,740	27,820	27,900	27,990	28,070	28,150	28,230	28,310	28,390	28,470	28,560	28,640	11
12	30,020	30,120	30,210	30,310	30,400	30,490	30,580	30,670	30,770	30,860	30,950	31,040	31,130	31,220	31,310	31,400	31,490	31,580	31,660	31,750	31,840	12
13	33,090	33,190	33,300	33,400	33,500	33,610	33,710	33,810	33,910	34,010	34,110	34,210	34,310	34,410	34,510	34,610	34,710	34,810	34,910	35,010	35,110	13
14	36,250	36,360	36,470	36,580	36,700	36,810	36,920	37,030	37,140	37,250	37,360	37,470	37,570	37,680	37,790	37,900	38,010	38,110	38,220	38,330	38,430	14
15	39,430	39,560	39,680	39,800	39,920	40,040	40,160	40,280	40,400	40,520	40,640	40,760	40,870	40,990	41,110	41,220	41,340	41,460	41,570	41,690	41,800	15
16	42,630	42,760	42,890	43,020	43,150	43,280	43,410	43,540	43,670	43,800	43,930	44,050	44,180	44,310	44,440	44,560	44,690	44,810	44,940	45,060	45,190	16
17	48,680	48,820	48,960	49,100	49,240	49,380	49,520	49,660	49,800	49,940	50,080	50,220	50,360	50,500	50,640	50,770	50,910	51,050	51,180	51,320	51,460	17
18	54,730	54,880	55,030	55,180	55,330	55,490	55,640	55,790	55,940	56,090	56,240	56,390	56,540	56,690	56,830	56,980	57,130	57,280	57,430	57,580	57,720	18
19	60,780	60,940	61,100	61,260	61,430	61,590	61,750	61,910	62,070	62,230	62,390	62,550	62,710	62,870	63,030	63,190	63,350	63,510	63,670	63,830	63,990	19
20	65,940	66,110	66,270	66,440	66,600	66,770	66,930	67,090	67,250	67,420	67,580	67,740	67,900	68,070	68,230	68,390	68,550	68,710	68,870	69,030	69,190	20
21	71,110	71,280	71,440	71,610	71,780	71,940	72,110	72,270	72,440	72,600	72,770	72,930	73,090	73,260	73,420	73,580	73,740	73,910	74,070	74,230	74,390	21
22	76,270	76,440	76,610	76,780	76,950	77,120	77,290	77,460	77,620	77,790	77,960	78,120	78,290	78,450	78,610	78,780	78,940	79,100	79,270	79,430	79,590	22
23	80,130	80,380	80,640	80,890	81,140	81,400	81,650	81,900	82,160	82,410	82,660	82,910	83,170	83,420	83,670	83,920	84,170	84,420	84,670	84,920	85,170	23
24	83,980	84,320	84,660	85,000	85,330	85,670	86,010	86,350	86,690	87,030	87,370	87,710	88,040	88,380	88,720	89,060	89,400	89,740	90,080	90,420	90,760	24
25	87,830	88,260	88,680	89,100	89,520	89,950	90,370	90,800	91,220	91,650	92,070	92,500	92,920	93,350	93,780	94,210	94,630	95,060	95,490	95,920	96,350	25
26	87,830	88,260	88,680	89,100	89,520	89,950	90,370	90,800	91,220	91,650	92,070	92,500	92,920	93,350	93,780	94,210	94,630	95,060	95,490	95,920	96,350	26
27	87,830	88,260	88,680	89,100	89,520	89,950	90,370	90,800	91,220	91,650	92,070	92,500	92,920	93,350	93,780	94,210	94,630	95,060	95,490	95,920	96,350	27
28	87,830	88,260	88,680	89,100	89,520	89,950	90,370	90,800	91,220	91,650	92,070	92,500	92,920	93,350	93,780	94,210	94,630	95,060	95,490	95,920	96,350	28

HEADWATER ELEVATION

GATE ARRANGEMENT	810.0	810.1	810.2	810.3	810.4	810.5	810.6	810.7	810.8	810.9	811.0	811.1	811.2	811.3	811.4	811.5	811.6	811.7	811.8	811.9	812.0	GATE ARRANGEMENT
1	2,150	2,160	2,160	2,170	2,180	2,180	2,190	2,190	2,200	2,210	2,210	2,220	2,220	2,230	2,240	2,240	2,250	2,260	2,260	2,270	2,270	1
2	4,620	4,640	4,650	4,670	4,680	4,690	4,710	4,720	4,730	4,750	4,760	4,770	4,780	4,800	4,810	4,820	4,840	4,850	4,860	4,880	4,890	2
3	7,120	7,150	7,170	7,190	7,210	7,230	7,250	7,270	7,290	7,310	7,330	7,350	7,370	7,390	7,410	7,430	7,450	7,470	7,490	7,510	7,530	3
4	9,740	9,770	9,790	9,820	9,850	9,880	9,910	9,940	9,970	10,000	10,020	10,050	10,080	10,110	10,140	10,170	10,200	10,230	10,250	10,280	10,310	4
5	12,420	12,460	12,500	12,530	12,570	12,610	12,650	12,680	12,720	12,760	12,800	12,830	12,870	12,910	12,950	12,980	13,020	13,060	13,090	13,130	13,170	5
6	14,860	14,900	14,950	15,000	15,040	15,090	15,130	15,180	15,230	15,270	15,320	15,360	15,410	15,450	15,500	15,540	15,590	15,630	15,680	15,720	15,770	6
7	17,590	17,640	17,690	17,740	17,800	17,850	17,900	17,950	18,010	18,060	18,110	18,160	18,210	18,270	18,320	18,370	18,420	18,470	18,520	18,570	18,620	7
8	20,230	20,290	20,350	20,410	20,470	20,530	20,580	20,640	20,700	20,760	20,810	20,870	20,930	20,990	21,040	21,100	21,160	21,220	21,270	21,330	21,390	8
9	23,050	23,120	23,180	23,250	23,320	23,380	23,450	23,510	23,580	23,640	23,710	23,770	23,840	23,900	23,970	24,030	24,100	24,160	24,220	24,290	24,350	9
10	25,850	25,930	26,000	26,070	26,150	26,220	26,290	26,360	26,440	26,510	26,580	26,650	26,720	26,790	26,860	26,940	27,010	27,080	27,150	27,220	27,290	10
11	28,640	28,720	28,800	28,870	28,950	29,030	29,110	29,190	29,270	29,350	29,430	29,500	29,580	29,660	29,740	29,820	29,890	29,970	30,050	30,120	30,200	11
12	31,840	31,930	32,020	32,100	32,190	32,280	32,370	32,450	32,540	32,620	32,710	32,800	32,880	32,970	33,050	33,140	33,220	33,310	33,390	33,480	33,560	12
13	35,110	35,210	35,300	35,400	35,500	35,600	35,690	35,790	35,890	35,980	36,080	36,170	36,270	36,360	36,460	36,550	36,650	36,740	36,840	36,930	37,020	13
14	38,430	38,540	38,640	38,750	38,850	38,960	39,060	39,170	39,270	39,370	39,480	39,580	39,680	39,790	39,890	39,990	40,090	40,190	40,300	40,400	40,500	14
15	41,800	41,920	42,030	42,150	42,260	42,370	42,490	42,600	42,710	42,830	42,940	43,050	43,160	43,270	43,380	43,490	43,610	43,720	43,830	43,940	44,050	15
16	45,190	45,310	45,440	45,560	45,690	45,810	45,930	46,050	46,180	46,300	46,420	46,540	46,660	46,780	46,900	47,020	47,140	47,260	47,380	47,500	47,620	16
17	51,460	51,590	51,730	51,860	52,000	52,130	52,270	52,400	52,530	52,670	52,800	52,930	53,060	53,200	53,330	53,460	53,590	53,720	53,850	53,980	54,110	17
18	57,720	57,870	58,020	58,160	58,310	58,450	58,600	58,750	58,890	59,030	59,180	59,320	59,470	59,610	59,750	59,890	60,030	60,180	60,320	60,460	60,600	18
19	63,990	64,150	64,310	64,460	64,620	64,780	64,930	65,090	65,250	65,400	65,560	65,710	65,870	66,020	66,170	66,330	66,480	66,630	66,780	66,930	67,080	19
20	69,190	69,350	69,510	69,670	69,820	69,980	70,140	70,300	70,450	70,610	70,760	70,920	71,070	71,230	71,380	71,540	71,690	71,840	71,990	72,150	72,300	20
21	74,390	74,550	74,710	74,870	75,030	75,180	75,340	75,500	75,660	75,810	75,970	76,130	76,280	76,440	76,590	76,750	76,900	77,050	77,210	77,360	77,510	21
22	79,590	79,750	79,910	80,070	80,230	80,390	80,550	80,700	80,860	81,020	81,180	81,330	81,490	81,650	81,800	81,960	82,110	82,260	82,420	82,570	82,720	22
23	85,170	85,420	85,670	85,920	86,170	86,420	86,670	86,920	87,170	87,410	87,550	87,680	87,810	87,950	88,080	88,210	88,340	88,470	88,600	88,730	88,860	23
24	90,760	91,100	91,440	91,780	92,120	92,460	92,800	93,140	93,480	93,800	93,910	94,030	94,140	94,250	94,360	94,470	94,580	94,690	94,790	94,900	95,000	24
25	96,350	96,780	97,210	97,640	98,070	98,500	98,930	99,360	99,790	100,200	100,300	100,400	100,500	100,600	100,600	100,700	100,800	100,900	101,000	101,100	101,100	25
26	96,350	96,780	97,210	97,640	98,070	98,500	98,930	99,360	99,790	100,200	100,400	100,600	100,800	101,000	101,200	101,400	101,600	101,800	102,000	102,200	102,400	26
27	96,350	96,780	97,210	97,640	98,070	98,500	98,930	99,360	99,790	100,200	100,500	100,900	101,200	101,500	101,800	102,100	102,400	102,800	103,100	103,400	103,700	27
28	96,350	96,780	97,210	97,640	98,070	98,500	98,930	99,360	99,790	100,200	100,700	101,100	101,500	102,000	102,400	102,800	103,300	103,700	104,100	104,600	105,000	28

MAY 2008

HEADWATER 808 to 812
TAILWATER 792.51 to 793.5

TELLICO DAM
SPILLWAY DISCHARGE
IN CUBIC FEET PER SECOND

HEADWATER ELEVATION

GATE ARRANGEMENT	812.0	812.1	812.2	812.3	812.4	812.5	812.6	812.7	812.8	812.9	813.0	813.1	813.2	813.3	813.4	813.5	813.6	813.7	813.8	813.9	814.0	GATE ARRANGEMENT
1	2,270	2,280	2,290	2,290	2,300	2,300	2,310	2,310	2,320	2,330	2,330	2,340	2,340	2,350	2,360	2,360	2,370	2,370	2,380	2,380	2,390	1
2	4,890	4,900	4,910	4,930	4,940	4,950	4,970	4,980	4,990	5,000	5,020	5,030	5,040	5,050	5,070	5,080	5,090	5,100	5,120	5,130	5,140	2
3	7,530	7,550	7,570	7,590	7,610	7,630	7,650	7,670	7,690	7,710	7,730	7,750	7,770	7,790	7,810	7,820	7,840	7,860	7,880	7,900	7,920	3
4	10,310	10,340	10,370	10,400	10,430	10,450	10,480	10,510	10,540	10,570	10,600	10,630	10,660	10,680	10,710	10,740	10,770	10,800	10,830	10,860	10,880	4
5	13,170	13,200	13,240	13,280	13,310	13,350	13,390	13,420	13,460	13,500	13,530	13,570	13,610	13,640	13,680	13,710	13,750	13,790	13,820	13,860	13,890	5
6	15,770	15,810	15,850	15,900	15,940	15,990	16,030	16,070	16,120	16,160	16,200	16,250	16,290	16,330	16,380	16,420	16,460	16,500	16,550	16,590	16,630	6
7	18,620	18,680	18,730	18,780	18,830	18,880	18,930	18,980	19,030	19,080	19,130	19,180	19,230	19,280	19,330	19,380	19,430	19,480	19,530	19,580	19,620	7
8	21,390	21,440	21,500	21,560	21,610	21,670	21,730	21,780	21,840	21,900	21,950	22,010	22,070	22,120	22,180	22,230	22,290	22,350	22,400	22,460	22,510	8
9	24,350	24,420	24,480	24,540	24,610	24,670	24,730	24,800	24,860	24,920	24,990	25,050	25,110	25,180	25,240	25,300	25,360	25,430	25,490	25,550	25,610	9
10	27,290	27,360	27,430	27,500	27,570	27,640	27,710	27,780	27,850	27,920	27,990	28,060	28,130	28,200	28,270	28,340	28,410	28,480	28,540	28,610	28,680	10
11	30,200	30,280	30,350	30,430	30,510	30,580	30,660	30,730	30,810	30,880	30,960	31,030	31,110	31,180	31,260	31,330	31,410	31,480	31,560	31,630	31,710	11
12	33,560	33,650	33,730	33,820	33,900	33,980	34,070	34,150	34,240	34,320	34,400	34,490	34,570	34,650	34,740	34,820	34,900	34,980	35,070	35,150	35,230	12
13	37,020	37,120	37,210	37,300	37,400	37,490	37,580	37,670	37,770	37,860	37,950	38,040	38,130	38,220	38,320	38,410	38,500	38,590	38,680	38,770	38,860	13
14	40,500	40,600	40,700	40,800	40,900	41,000	41,100	41,200	41,300	41,400	41,500	41,600	41,700	41,800	41,900	42,000	42,100	42,200	42,300	42,400	42,490	14
15	44,050	44,160	44,260	44,370	44,480	44,590	44,700	44,810	44,920	45,030	45,130	45,240	45,350	45,460	45,570	45,680	45,780	45,890	46,000	46,110	46,220	15
16	47,620	47,740	47,860	47,980	48,090	48,210	48,330	48,450	48,560	48,680	48,800	48,920	49,030	49,150	49,270	49,380	49,500	49,620	49,740	49,850	49,970	16
17	54,110	54,240	54,370	54,490	54,620	54,750	54,880	55,010	55,130	55,260	55,390	55,510	55,640	55,760	55,890	56,010	56,140	56,260	56,390	56,510	56,640	17
18	60,600	60,740	60,880	61,010	61,150	61,290	61,430	61,560	61,700	61,840	61,970	62,110	62,240	62,380	62,510	62,640	62,780	62,910	63,040	63,170	63,300	18
19	67,080	67,230	67,380	67,530	67,680	67,830	67,980	68,120	68,270	68,410	68,560	68,700	68,850	68,990	69,130	69,270	69,410	69,550	69,690	69,830	69,970	19
20	72,300	72,450	72,600	72,750	72,900	73,050	73,200	73,340	73,490	73,640	73,780	73,930	74,080	74,220	74,370	74,510	74,650	74,790	74,940	75,080	75,220	20
21	77,510	77,660	77,810	77,970	78,120	78,270	78,420	78,570	78,710	78,860	79,010	79,160	79,310	79,450	79,600	79,750	79,890	80,040	80,180	80,320	80,470	21
22	82,720	82,880	83,030	83,180	83,330	83,490	83,640	83,790	83,940	84,090	84,240	84,390	84,540	84,690	84,830	84,980	85,130	85,280	85,420	85,570	85,720	22
23	88,860	89,000	89,130	89,260	89,400	89,530	89,660	89,790	89,920	90,050	90,180	90,310	90,430	90,560	90,690	90,810	90,940	91,060	91,180	91,310	91,430	23
24	95,000	95,120	95,230	95,350	95,460	95,570	95,680	95,790	95,900	96,010	96,120	96,220	96,330	96,430	96,540	96,640	96,740	96,850	96,950	97,050	97,150	24
25	101,100	101,200	101,300	101,400	101,500	101,600	101,700	101,800	101,900	102,000	102,100	102,100	102,200	102,300	102,400	102,500	102,600	102,600	102,700	102,800	102,900	25
26	102,400	102,600	102,800	103,100	103,300	103,500	103,700	103,900	104,100	104,300	104,500	104,700	104,900	105,100	105,300	105,500	105,700	105,900	106,100	106,300	106,500	26
27	103,700	104,000	104,400	104,700	105,000	105,300	105,700	106,000	106,300	106,600	106,900	107,300	107,600	107,900	108,200	108,600	108,900	109,200	109,500	109,800	110,200	27
28	105,000	105,400	105,900	106,300	106,800	107,200	107,600	108,100	108,500	108,900	109,400	109,800	110,300	110,700	111,200	111,600	112,000	112,500	112,900	113,400	113,800	28

HEADWATER ELEVATION

GATE ARRANGEMENT	814.0	814.1	814.2	814.3	814.4	814.5	814.6	814.7	814.8	814.9	815.0	815.1	815.2	815.3	815.4	815.5	815.6	815.7	815.8	815.9	816.0	GATE ARRANGEMENT
1	2,390	2,400	2,400	2,410	2,410	2,420	2,420	2,430	2,430	2,440	2,450	2,450	2,460	2,460	2,470	2,470						1
2	5,140	5,150	5,160	5,180	5,190	5,200	5,210	5,220	5,240	5,250	5,260	5,270	5,280	5,300	5,310	5,320	5,330	5,340	5,360	5,370	5,380	2
3	7,920	7,940	7,960	7,980	7,990	8,010	8,030	8,050	8,070	8,090	8,110	8,120	8,140	8,160	8,180	8,200	8,220	8,230	8,250	8,270	8,290	3
4	10,880	10,910	10,940	10,970	11,000	11,030	11,060	11,080	11,110	11,140	11,170	11,200	11,230	11,250	11,280	11,310	11,340	11,370	11,400	11,420	11,450	4
5	13,890	13,930	13,970	14,000	14,040	14,070	14,110	14,140	14,180	14,210	14,250	14,280	14,320	14,350	14,390	14,420	14,460	14,490	14,530	14,560	14,590	5
6	16,630	16,670	16,720	16,760	16,800	16,840	16,880	16,930	16,970	17,010	17,050	17,090	17,140	17,180	17,220	17,260	17,300	17,340	17,380	17,430	17,470	6
7	19,620	19,670	19,720	19,770	19,820	19,870	19,920	19,970	20,010	20,060	20,110	20,160	20,200	20,250	20,300	20,350	20,390	20,440	20,490	20,540	20,580	7
8	22,510	22,570	22,620	22,680	22,730	22,790	22,840	22,900	22,950	23,000	23,060	23,110	23,170	23,220	23,270	23,330	23,380	23,430	23,490	23,540	23,590	8
9	25,610	25,670	25,740	25,800	25,860	25,920	25,980	26,040	26,100	26,170	26,230	26,290	26,350	26,410	26,470	26,530	26,590	26,650	26,700	26,760	26,820	9
10	28,680	28,750	28,820	28,890	28,950	29,020	29,090	29,160	29,220	29,290	29,360	29,420	29,490	29,560	29,620	29,690	29,760	29,820	29,890	29,950	30,020	10
11	31,710	31,780	31,850	31,930	32,000	32,070	32,150	32,220	32,290	32,360	32,440	32,510	32,580	32,650	32,720	32,800	32,870	32,940	33,010	33,080	33,150	11
12	35,230	35,310	35,400	35,480	35,560	35,640	35,730	35,810	35,890	35,970	36,050	36,130	36,220	36,300	36,380	36,460	36,540	36,620	36,700	36,780	36,860	12
13	38,860	38,950	39,040	39,130	39,220	39,310	39,400	39,490	39,580	39,670	39,760	39,850	39,940	40,030	40,120	40,210	40,300	40,390	40,480	40,570	40,660	13
14	42,490	42,590	42,690	42,790	42,890	42,990	43,090	43,190	43,290	43,390	43,490	43,590	43,680	43,780	43,880	43,980	44,080	44,190	44,290	44,390	44,490	14
15	46,220	46,320	46,430	46,540	46,650	46,760	46,860	46,970	47,080	47,190	47,300	47,410	47,520	47,630	47,740	47,850	47,960	48,070	48,180	48,290	48,400	15
16	49,970	50,090	50,200	50,320	50,440	50,560	50,670	50,790	50,910	51,030	51,150	51,270	51,380	51,500	51,620	51,740	51,860	51,980	52,100	52,220	52,350	16
17	56,640	56,760	56,890	57,010	57,130	57,260	57,380	57,500	57,630	57,750	57,870	58,000	58,120	58,240	58,360	58,490	58,610	58,730	58,860	58,980	59,100	17
18	63,300	63,440	63,570	63,700	63,830	63,960	64,090	64,210	64,340	64,470	64,600	64,730	64,850	64,980	65,110	65,230	65,360	65,480	65,610	65,730	65,860	18
19	69,970	70,110	70,250	70,380	70,520	70,660	70,790	70,930	71,060	71,190	71,330	71,460	71,590	71,720	71,850	71,980	72,110	72,230	72,360	72,490	72,610	19
20	75,220	75,360	75,500	75,640	75,780	75,920	76,060	76,190	76,330	76,470	76,600	76,740	76,870	77,010	77,140	77,280	77,410	77,540	77,670	77,800	77,930	20
21	80,470	80,610	80,750	80,900	81,040	81,180	81,320	81,460	81,600	81,740	81,880	82,020	82,160	82,300	82,440	82,570	82,710	82,850	82,980	83,120	83,250	21
22	85,720	85,860	86,010	86,150	86,300	86,440	86,590	86,730	86,870	87,020	87,160	87,300	87,450	87,590	87,730	87,870	88,010	88,150	88,290	88,430	88,570	22
23	91,430	91,570	91,700	91,830	91,970	92,100	92,230	92,360	92,490	92,620	92,750	92,880	93,010	93,140	93,270	93,390	93,520	93,650	93,770	93,900	94,020	23
24	97,150	97,270	97,390	97,510	97,630	97,750	97,870	97,990	98,110	98,230	98,340	98,460	98,570	98,690	98,800	98,910	99,030	99,140	99,250	99,360	99,470	24
25	102,900	103,000	103,100	103,200	103,300	103,400	103,500	103,600	103,700	103,800	103,900	104,000	104,100	104,200	104,300	104,400	104,500	104,600	104,700	104,800	104,900	25
26	106,500	106,700	107,000	107,200	107,400	107,600	107,800	108,100	108,300	108,500	109,600	109,600	109,700	109,800	109,800	109,900	110,000	110,000	110,100	110,200	110,200	26
27	110,200	110,500	110,800	111,200	111,500	111,800	112,200	112,500	112,800	113,200	115,200	115,200	115,200	115,300	115,300	115,300	115,400	115,400	115,500	115,500	115,500	27
28	113,800	114,300	114,700	115,100	115,600	116,000	116,500	116,900	117,400	117,800	120,800	120,800	120,800	120,800	120,800	120,800	120,800	120,800	120,800	120,800	120,800	28

HEADWATER 812 to 816
TAILWATER 792.51 to 793.5

See special instruction for preventing gate overflow on page 2.

MAY 2008

TELLICO DAM
SPILLWAY DISCHARGE
IN CUBIC FEET PER SECOND

GATE ARRANGEMENT	HEADWATER ELEVATION																				GATE ARRANGEMENT
	816.0	816.1	816.2	816.3	816.4	816.5	816.6	816.7	816.8	816.9	817.0	817.1	817.2	817.3	817.4	817.5	817.6	817.7	817.8	817.9	818.0	
1																						1
2	5,380	5,390	5,400																			2
3	8,290	8,310	8,320	8,340	8,360	8,380	8,390	8,410	8,430	8,450	8,470											3
4	11,450	11,480	11,510	11,530	11,560	11,590	11,620	11,640	11,670	11,700	11,730	11,940	12,300	12,770	13,330	13,960	14,650	15,410				4
5	14,590	14,630	14,660	14,700	14,730	14,770	14,800	14,830	14,870	14,900	14,930	15,150	15,520	16,000	16,560	17,200	17,900	18,670	19,490	20,380	21,310	5
6	17,470	17,510	17,550	17,590	17,630	17,670	17,710	17,750	17,790	17,830	17,880	18,100	18,480	18,960	19,530	20,170	20,890	21,660	22,490	23,380	24,330	6
7	20,580	20,630	20,680	20,720	20,770	20,810	20,860	20,910	20,950	21,000	21,040	21,270	21,660	22,150	22,720	23,370	24,080	24,860	25,700	26,590	27,540	7
8	23,590	23,640	23,700	23,750	23,800	23,850	23,900	23,950	24,000	24,060	24,110	24,340	24,730	25,220	25,800	26,450	27,170	27,960	28,800	29,700	30,650	8
9	26,820	26,880	26,940	27,000	27,060	27,110	27,170	27,230	27,290	27,340	27,400	27,640	28,040	28,540	29,120	29,780	30,510	31,300	32,150	33,050	34,010	9
10	30,020	30,080	30,150	30,210	30,280	30,340	30,400	30,470	30,530	30,600	30,660	30,910	31,310	31,810	32,400	33,070	33,800	34,600	35,450	36,360	37,330	10
11	33,150	33,220	33,290	33,360	33,440	33,510	33,580	33,650	33,720	33,790	33,850	34,110	34,520	35,030	35,630	36,300	37,040	37,840	38,700	39,620	40,590	11
12	36,860	36,940	37,020	37,100	37,190	37,270	37,350	37,430	37,510	37,590	37,670	37,930	38,350	38,870	39,480	40,160	40,910	41,720	42,600	43,520	44,510	12
13	40,660	40,750	40,840	40,930	41,020	41,110	41,200	41,290	41,380	41,470	41,560	41,840	42,270	42,800	43,420	44,110	44,870	45,690	46,580	47,520	48,510	13
14	44,490	44,590	44,690	44,790	44,890	44,990	45,100	45,200	45,300	45,400	45,510	45,790	46,240	46,780	47,410	48,120	48,890	49,730	50,620	51,580	52,580	14
15	48,400	48,510	48,620	48,730	48,840	48,960	49,070	49,180	49,290	49,410	49,520	49,820	50,270	50,830	51,470	52,190	52,970	53,820	54,730	55,690	56,710	15
16	52,350	52,470	52,590	52,710	52,840	52,960	53,080	53,210	53,330	53,450	53,580	53,890	54,350	54,920	55,580	56,310	57,100	57,960	58,880	59,860	60,890	16
17	59,100	59,220	59,350	59,470	59,590	59,720	59,840	59,960	60,090	60,210	60,330	60,640	61,100	61,670	62,320	63,050	63,840	64,700	65,610	66,580	67,610	17
18	65,860	65,980	66,110	66,230	66,350	66,480	66,600	66,720	66,840	66,960	67,090	67,390	67,850	68,420	69,060	69,790	70,580	71,430	72,340	73,310	74,330	18
19	72,610	72,740	72,860	72,990	73,110	73,230	73,360	73,480	73,600	73,720	73,840	74,140	74,600	75,160	75,810	76,530	77,310	78,160	79,070	80,040	81,050	19
20	77,930	78,070	78,200	78,330	78,460	78,590	78,720	78,850	78,980	79,110	79,240	79,550	80,020	80,590	81,240	81,970	82,760	83,620	84,540	85,510	86,540	20
21	83,250	83,390	83,530	83,670	83,810	83,950	84,090	84,230	84,360	84,500	84,640	84,960	85,430	86,010	86,670	87,410	88,220	89,080	90,010	90,990	92,030	21
22	88,570	88,720	88,870	89,020	89,160	89,310	89,450	89,600	89,750	89,890	90,040	90,370	90,850	91,440	92,110	92,850	93,670	94,550	95,480	96,470	97,520	22
23	94,020	94,170	94,310	94,450	94,600	94,740	94,880	95,020	95,160	95,300	95,440	95,770	96,250	96,830	97,500	98,240	99,040	99,920	100,800	101,800	102,900	23
24	99,470	99,610	99,750	99,890	100,000	100,200	100,300	100,400	100,600	100,700	100,900	101,200	101,600	102,200	102,900	103,600	104,400	105,300	106,200	107,200	108,200	24
25	104,900	105,100	105,200	105,300	105,500	105,600	105,700	105,900	106,000	106,100	106,300	106,600	107,000	107,600	108,300	109,000	109,800	110,700	111,600	112,500	113,600	25
26	110,200	110,300	110,400	110,500	110,600	110,700	110,800	110,900	111,000	111,100	111,100	111,400	111,900	112,400	113,000	113,700	114,500	115,300	116,200	117,100	118,100	26
27	115,500	115,600	115,600	115,700	115,700	115,800	115,800	115,900	115,900	116,000	116,000	116,300	116,700	117,200	117,700	118,400	119,100	119,900	120,800	121,700	122,600	27
28	120,800	120,800	120,900	120,900	120,900	120,900	120,900	120,900	120,900	120,900	120,900	121,100	121,500	121,900	122,500	123,100	123,800	124,500	125,300	126,200	127,100	28

GATE ARRANGEMENT	HEADWATER ELEVATION																				GATE ARRANGEMENT
	818.0	818.1	818.2	818.3	818.4	818.5	818.6	818.7	818.8	818.9	819.0	819.1	819.2	819.3	819.4	819.5	819.6	819.7	819.8	819.9	820.0	
1																						1
2																						2
3																						3
4																						4
5	21,310	22,300	23,340	24,430	25,560																	5
6	24,330	25,320	26,370	27,460	28,600	29,790	31,020	32,300	33,620	34,990	36,390	37,840										6
7	27,540	28,540	29,590	30,690	31,830	33,030	34,260	35,540	36,870	38,240	39,650	41,100	42,590	44,120	45,690	47,300	48,950	50,630	52,360			7
8	30,650	31,660	32,710	33,810	34,970	36,160	37,400	38,690	40,020	41,390	42,810	44,260	45,760	47,290	48,870	50,480	52,130	53,830	55,550	57,320	59,120	8
9	34,010	35,020	36,080	37,190	38,350	39,550	40,800	42,090	43,430	44,810	46,230	47,690	49,190	50,730	52,310	53,940	55,590	57,290	59,030	60,800	62,610	9
10	37,330	38,350	39,410	40,530	41,690	42,900	44,160	45,450	46,800	48,180	49,610	51,080	52,580	54,130	55,720	57,350	59,010	60,710	62,450	64,230	66,050	10
11	40,590	41,610	42,690	43,810	44,980	46,200	47,460	48,760	50,110	51,500	52,930	54,410	55,920	57,480	59,070	60,710	62,380	64,090	65,830	67,620	69,440	11
12	44,510	45,540	46,630	47,760	48,940	50,170	51,440	52,760	54,120	55,520	56,960	58,450	59,970	61,540	63,140	64,790	66,470	68,190	69,950	71,750	73,580	12
13	48,510	49,560	50,650	51,800	52,990	54,230	55,510	56,840	58,210	59,630	61,080	62,580	64,120	65,690	67,310	68,970	70,660	72,400	74,170	75,980	77,820	13
14	52,580	53,640	54,750	55,910	57,120	58,370	59,670	61,010	62,400	63,820	65,290	66,810	68,360	69,950	71,580	73,250	74,960	76,710	78,490	80,320	82,180	14
15	56,710	57,780	58,900	60,070	61,290	62,560	63,860	65,220	66,620	68,060	69,540	71,060	72,620	74,230	75,870	77,550	79,280	81,040	82,830	84,670	86,540	15
16	60,890	61,970	63,110	64,290	65,520	66,800	68,120	69,480	70,890	72,350	73,840	75,380	76,950	78,570	80,230	81,920	83,660	85,430	87,240	89,090	90,970	16
17	67,610	68,690	69,820	71,000	72,220	73,490	74,810	76,170	77,570	79,020	80,510	82,040	83,610	85,220	86,870	88,560	90,280	92,050	93,850	95,690	97,570	17
18	74,330	75,410	76,530	77,700	78,920	80,190	81,500	82,850	84,250	85,690	87,180	88,700	90,260	91,870	93,510	95,190	96,910	98,670	100,500	102,300	104,200	18
19	81,050	82,120	83,240	84,410	85,620	86,880	88,190	89,540	90,930	92,370	93,840	95,360	96,920	98,510	100,200	101,800	103,500	105,300	107,100	108,900	110,800	19
20	86,540	87,620	88,750	89,930	91,150	92,420	93,740	95,090	96,500	97,940	99,430	101,000	102,500	104,100	105,800	107,500	109,200	110,900	112,700	114,600	116,400	20
21	92,030	93,120	94,260	95,440	96,680	97,960	99,280	100,600	102,100	103,500	105,000	106,500	108,100	109,700	111,400	113,100	114,800	116,600	118,400	120,200	122,100	21
22	97,520	98,620	99,760	101,000	102,200	103,500	104,800	106,200	107,600	109,100	110,600	112,100	113,700	115,400	117,000	118,700	120,500	122,200	124,100	125,900	127,800	22
23	102,900	104,000	105,100	106,300	107,600	108,900	110,200	111,600	113,000	114,500	116,000	117,600	119,200	120,800	122,500	124,200	125,900	127,700	129,500	131,400	133,300	23
24	108,200	109,300	110,500	111,700	113,000	114,300	115,600	117,000	118,400	119,900	121,400	123,000	124,600	126,200	127,900	129,600	131,400	133,100	135,000	136,800	138,700	24
25	113,600	114,700	115,900	117,100	118,300	119,600	121,000	122,400	123,800	125,300	126,800	128,400	130,000	131,600	133,300	135,000	136,800	138,600	140,400	142,300	144,200	25
26	118,100	119,200	120,400	121,600	122,900	124,200	125,600	127,000	128,500	130,000	131,500	133,100	134,700	136,400	138,100	139,800	141,600	143,400	145,200	147,100	149,000	26
27	122,600	123,800	125,000	126,200	127,500	128,800	130,200	131,600	133,100	134,600	136,200	137,800	139,400	141,100	142,800	144,500	146,300	148,200	150,000	151,900	153,900	27
28	127,100	128,300	129,500	130,800	132,100	133,400	134,800	136,300	137,800	139,300	140,900	142,500	144,100	145,800	147,500	149,300	151,100	153,000	154,800	156,800	158,700	28

MAY 2008

See special instruction for preventing gate overflow on page 2.

HEADWATER 816 to 820
TAILWATER 792.51 to 793.5

TELLICO DAM
SPILLWAY DISCHARGE
IN CUBIC FEET PER SECOND

GATE ARRANGEMENT	HEADWATER ELEVATION																				GATE ARRANGEMENT
	800.0	800.1	800.2	800.3	800.4	800.5	800.6	800.7	800.8	800.9	801.0	801.1	801.2	801.3	801.4	801.5	801.6	801.7	801.8	801.9	802.0	
1	1,280	1,290	1,300	1,310	1,320	1,330	1,340	1,350	1,360	1,370	1,380	1,390	1,400	1,410	1,420	1,430	1,440	1,450	1,460	1,470	1,480	1
2	2,750	2,770	2,790	2,820	2,840	2,860	2,880	2,900	2,920	2,950	2,970	2,990	3,010	3,030	3,050	3,070	3,090	3,110	3,130	3,150	3,170	2
3	4,230	4,270	4,300	4,340	4,370	4,400	4,440	4,470	4,500	4,540	4,570	4,600	4,640	4,670	4,700	4,730	4,760	4,790	4,820	4,860	4,890	3
4	5,540	5,600	5,660	5,720	5,780	5,830	5,890	5,950	6,000	6,050	6,110	6,160	6,210	6,260	6,320	6,370	6,420	6,470	6,510	6,560	6,610	4
5	7,110	7,170	7,230	7,290	7,350	7,410	7,470	7,530	7,590	7,660	7,720	7,780	7,840	7,900	7,960	8,020	8,080	8,140	8,200	8,260	8,320	5
6	8,590	8,660	8,730	8,790	8,860	8,930	8,990	9,060	9,130	9,200	9,260	9,330	9,400	9,470	9,530	9,600	9,670	9,730	9,800	9,870	9,940	6
7	10,280	10,360	10,440	10,520	10,600	10,680	10,760	10,830	10,910	10,990	11,070	11,150	11,230	11,310	11,390	11,470	11,550	11,630	11,710	11,790	11,860	7
8	11,960	12,050	12,140	12,230	12,320	12,410	12,500	12,590	12,680	12,770	12,860	12,950	13,050	13,140	13,230	13,320	13,410	13,500	13,590	13,680	13,770	8
9	13,720	13,820	13,920	14,030	14,130	14,230	14,340	14,440	14,550	14,650	14,750	14,860	14,960	15,070	15,170	15,270	15,380	15,480	15,580	15,690	15,790	9
10	15,500	15,610	15,730	15,840	15,960	16,070	16,190	16,300	16,420	16,540	16,650	16,770	16,880	17,000	17,120	17,230	17,350	17,460	17,580	17,690	17,810	10
11	17,270	17,400	17,530	17,650	17,780	17,910	18,040	18,170	18,300	18,430	18,560	18,690	18,820	18,950	19,080	19,210	19,330	19,460	19,590	19,720	19,850	11
12	19,190	19,320	19,460	19,590	19,730	19,860	20,000	20,140	20,270	20,410	20,550	20,680	20,820	20,960	21,090	21,230	21,370	21,500	21,640	21,780	21,910	12
13	21,290	21,430	21,580	21,730	21,870	22,020	22,170	22,320	22,470	22,610	22,760	22,910	23,060	23,210	23,350	23,500	23,650	23,800	23,950	24,090	24,240	13
14	23,410	23,570	23,730	23,890	24,050	24,210	24,370	24,530	24,690	24,850	25,010	25,170	25,330	25,490	25,650	25,810	25,970	26,130	26,290	26,450	26,610	14
15	25,600	25,770	25,940	26,110	26,280	26,450	26,620	26,790	26,960	27,130	27,300	27,470	27,640	27,810	27,980	28,160	28,330	28,500	28,670	28,840	29,010	15
16	27,780	27,960	28,140	28,330	28,510	28,690	28,870	29,050	29,240	29,420	29,600	29,790	29,970	30,150	30,330	30,520	30,700	30,880	31,060	31,240	31,420	16
17	33,450	33,630	33,810	33,990	34,170	34,350	34,530	34,710	34,890	35,070	35,260	35,440	35,620	35,800	35,980	36,160	36,340	36,520	36,700	36,880	37,060	17
18	39,120	39,290	39,470	39,650	39,830	40,010	40,190	40,370	40,550	40,730	40,910	41,090	41,270	41,440	41,620	41,800	41,980	42,160	42,330	42,510	42,690	18
19	44,780	44,960	45,140	45,320	45,500	45,670	45,850	46,030	46,210	46,380	46,560	46,740	46,910	47,090	47,270	47,440	47,620	47,790	47,970	48,150	48,320	19
20	47,370	47,650	47,920	48,200	48,470	48,750	49,020	49,290	49,560	49,830	50,100	50,370	50,640	50,900	51,170	51,440	51,700	51,970	52,230	52,500	52,760	20
21	49,960	50,330	50,710	51,080	51,450	51,820	52,190	52,550	52,920	53,280	53,640	54,000	54,360	54,720	55,080	55,430	55,790	56,140	56,490	56,850	57,200	21
22	52,540	53,020	53,490	53,960	54,430	54,890	55,350	55,810	56,270	56,730	57,180	57,630	58,080	58,530	58,980	59,430	59,870	60,320	60,760	61,200	61,640	22
23	52,540	53,020	53,490	53,960	54,430	54,890	55,350	55,810	56,270	56,730	57,180	57,630	58,080	58,530	58,980	59,430	59,870	60,320	60,760	61,200	61,640	23
24	52,540	53,020	53,490	53,960	54,430	54,890	55,350	55,810	56,270	56,730	57,180	57,630	58,080	58,530	58,980	59,430	59,870	60,320	60,760	61,200	61,640	24
25	52,540	53,020	53,490	53,960	54,430	54,890	55,350	55,810	56,270	56,730	57,180	57,630	58,080	58,530	58,980	59,430	59,870	60,320	60,760	61,200	61,640	25
26	52,540	53,020	53,490	53,960	54,430	54,890	55,350	55,810	56,270	56,730	57,180	57,630	58,080	58,530	58,980	59,430	59,870	60,320	60,760	61,200	61,640	26
27	52,540	53,020	53,490	53,960	54,430	54,890	55,350	55,810	56,270	56,730	57,180	57,630	58,080	58,530	58,980	59,430	59,870	60,320	60,760	61,200	61,640	27
28	52,540	53,020	53,490	53,960	54,430	54,890	55,350	55,810	56,270	56,730	57,180	57,630	58,080	58,530	58,980	59,430	59,870	60,320	60,760	61,200	61,640	28

GATE ARRANGEMENT	HEADWATER ELEVATION																				GATE ARRANGEMENT
	802.0	802.1	802.2	802.3	802.4	802.5	802.6	802.7	802.8	802.9	803.0	803.1	803.2	803.3	803.4	803.5	803.6	803.7	803.8	803.9	804.0	
1	1,480	1,480	1,490	1,500	1,510	1,520	1,530	1,540	1,550	1,560	1,560	1,570	1,580	1,590	1,600	1,610	1,620	1,620	1,630	1,640	1,650	1
2	3,170	3,190	3,210	3,230	3,250	3,270	3,290	3,310	3,330	3,350	3,360	3,380	3,400	3,420	3,440	3,460	3,480	3,490	3,510	3,530	3,550	2
3	4,890	4,920	4,950	4,980	5,010	5,040	5,070	5,100	5,120	5,150	5,180	5,210	5,240	5,270	5,300	5,320	5,350	5,380	5,410	5,440	5,460	3
4	6,610	6,660	6,710	6,750	6,800	6,840	6,890	6,930	6,980	7,020	7,060	7,110	7,150	7,190	7,230	7,270	7,310	7,350	7,390	7,430	7,470	4
5	8,320	8,380	8,440	8,500	8,560	8,620	8,680	8,730	8,790	8,850	8,910	8,970	9,020	9,080	9,140	9,190	9,250	9,300	9,360	9,410	9,460	5
6	9,940	10,000	10,070	10,140	10,200	10,270	10,340	10,400	10,470	10,530	10,600	10,660	10,730	10,790	10,860	10,920	10,990	11,050	11,110	11,180	11,240	6
7	11,860	11,940	12,020	12,100	12,180	12,260	12,330	12,410	12,490	12,570	12,640	12,720	12,800	12,870	12,950	13,020	13,100	13,170	13,250	13,320	13,390	7
8	13,770	13,860	13,950	14,040	14,130	14,220	14,310	14,400	14,490	14,570	14,660	14,750	14,840	14,920	15,010	15,100	15,180	15,270	15,350	15,430	15,520	8
9	15,790	15,890	16,000	16,100	16,200	16,300	16,400	16,500	16,610	16,710	16,810	16,900	17,000	17,100	17,200	17,300	17,390	17,490	17,580	17,680	17,770	9
10	17,810	17,920	18,040	18,150	18,270	18,380	18,490	18,600	18,720	18,830	18,940	19,050	19,160	19,270	19,370	19,480	19,590	19,690	19,800	19,900	20,010	10
11	19,850	19,970	20,100	20,230	20,350	20,480	20,600	20,730	20,850	20,970	21,100	21,220	21,340	21,460	21,580	21,690	21,810	21,930	22,040	22,160	22,270	11
12	21,910	22,050	22,180	22,320	22,450	22,590	22,720	22,860	22,990	23,120	23,260	23,390	23,520	23,650	23,780	23,910	24,040	24,160	24,290	24,420	24,540	12
13	24,240	24,390	24,530	24,680	24,830	24,970	25,120	25,260	25,410	25,550	25,690	25,840	25,980	26,120	26,260	26,400	26,540	26,680	26,810	26,950	27,090	13
14	26,610	26,770	26,920	27,080	27,240	27,400	27,550	27,710	27,870	28,020	28,180	28,330	28,480	28,630	28,790	28,940	29,090	29,240	29,380	29,530	29,680	14
15	29,010	29,180	29,350	29,510	29,680	29,850	30,020	30,180	30,350	30,520	30,680	30,850	31,010	31,170	31,340	31,500	31,660	31,820	31,980	32,130	32,290	15
16	31,420	31,610	31,790	31,970	32,150	32,330	32,500	32,680	32,860	33,040	33,210	33,390	33,560	33,740	33,910	34,080	34,250	34,420	34,590	34,760	34,930	16
17	37,060	37,240	37,410	37,590	37,770	37,950	38,130	38,300	38,480	38,660	38,830	39,010	39,180	39,350	39,530	39,700	39,870	40,040	40,220	40,390	40,550	17
18	42,690	42,870	43,040	43,220	43,400	43,570	43,750	43,920	44,100	44,280	44,450	44,620	44,800	44,970	45,150	45,320	45,490	45,670	45,840	46,010	46,180	18
19	48,320	48,500	48,670	48,850	49,020	49,200	49,370	49,550	49,720	49,890	50,070	50,240	50,420	50,590	50,770	50,940	51,110	51,290	51,460	51,640	51,810	19
20	52,760	53,020	53,290	53,550	53,810	54,070	54,330	54,590	54,850	55,110	55,370	55,630	55,890	56,150	56,410	56,670	56,930	57,190	57,450	57,700	57,960	20
21	57,200	57,550	57,900	58,250	58,600	58,950	59,290	59,640	59,990	60,330	60,680	61,020	61,370	61,710	62,060	62,400	62,740	63,090	63,430	63,770	64,110	21
22	61,640	62,080	62,510	62,950	63,390	63,820	64,260	64,690	65,120	65,550	65,980	66,410	66,840	67,270	67,700	68,130	68,560	68,990	69,410	69,840	70,270	22
23	61,640	62,080	62,510	62,950	63,390	63,820	64,260	64,690	65,120	65,550	65,980	66,410	66,840	67,270	67,700	68,130	68,560	68,990	69,410	69,840	70,270	23
24	61,640	62,080	62,510	62,950	63,390	63,820	64,260	64,690	65,120	65,550	65,980	66,410	66,840	67,270	67,700	68,130	68,560	68,990	69,410	69,840	70,270	24
25	61,640	62,080	62,510	62,950	63,390	63,820	64,260	64,690	65,120	65,550	65,980	66,410	66,840	67,270	67,700	68,130	68,560	68,990	69,410	69,840	70,270	25
26	61,640	62,080	62,510	62,950	63,390	63,820	64,260	64,690	65,120	65,550	65,980	66,410	66,840	67,270	67,700	68,130	68,560	68,990	69,410	69,840	70,270	26
27	61,640	62,080	62,510	62,950	63,390	63,820	64,260	64,690	65,120	65,550	65,980	66,410	66,840	67,270	67,700	68,130	68,560	68,990	69,410	69,840	70,270	27
28	61,640	62,080	62,510	62,950	63,390	63,820	64,260	64,690	65,120	65,550	65,980	66,410	66,840	67,270	67,700	68,130	68,560	68,990	69,410	69,840	70,270	28

HEADWATER 800 to 804
TAILWATER 793.51 to 794.5

MAY 2008

TELLICO DAM
SPILLWAY DISCHARGE
IN CUBIC FEET PER SECOND

GATE ARRANGEMENT	HEADWATER ELEVATION																				GATE ARRANGEMENT
	804.0	804.1	804.2	804.3	804.4	804.5	804.6	804.7	804.8	804.9	805.0	805.1	805.2	805.3	805.4	805.5	805.6	805.7	805.8	805.9	806.0	
1	1,650	1,660	1,670	1,670	1,680	1,690	1,700	1,710	1,710	1,720	1,730	1,740	1,750	1,750	1,760	1,770	1,780	1,780	1,790	1,800	1,810	1
2	3,550	3,560	3,580	3,600	3,620	3,630	3,650	3,670	3,690	3,700	3,720	3,740	3,750	3,770	3,790	3,800	3,820	3,840	3,850	3,870	3,890	2
3	5,460	5,490	5,520	5,540	5,570	5,600	5,620	5,650	5,680	5,700	5,730	5,760	5,780	5,810	5,830	5,860	5,880	5,910	5,930	5,960	5,980	3
4	7,470	7,510	7,550	7,590	7,620	7,660	7,700	7,730	7,770	7,810	7,840	7,880	7,910	7,950	7,980	8,020	8,050	8,080	8,120	8,150	8,180	4
5	9,460	9,520	9,570	9,620	9,670	9,720	9,770	9,820	9,870	9,920	9,970	10,020	10,060	10,110	10,160	10,210	10,250	10,300	10,340	10,390	10,430	5
6	11,240	11,300	11,360	11,420	11,490	11,550	11,610	11,670	11,730	11,780	11,840	11,900	11,960	12,020	12,070	12,130	12,190	12,240	12,300	12,360	12,410	6
7	13,390	13,470	13,540	13,610	13,680	13,750	13,820	13,890	13,960	14,030	14,100	14,170	14,240	14,300	14,370	14,440	14,500	14,570	14,640	14,700	14,760	7
8	15,520	15,600	15,680	15,760	15,840	15,930	16,010	16,080	16,160	16,240	16,320	16,400	16,470	16,550	16,630	16,700	16,780	16,850	16,920	17,000	17,070	8
9	17,770	17,860	17,950	18,050	18,140	18,230	18,310	18,400	18,490	18,580	18,660	18,750	18,830	18,920	19,000	19,080	19,170	19,250	19,330	19,410	19,490	9
10	20,010	20,110	20,210	20,310	20,410	20,510	20,610	20,710	20,800	20,900	20,990	21,090	21,180	21,270	21,360	21,460	21,550	21,640	21,730	21,810	21,900	10
11	22,270	22,380	22,490	22,600	22,710	22,820	22,920	23,030	23,130	23,230	23,340	23,440	23,540	23,640	23,740	23,830	23,930	24,030	24,120	24,220	24,310	11
12	24,540	24,670	24,790	24,910	25,040	25,160	25,280	25,400	25,520	25,630	25,750	25,870	25,980	26,100	26,210	26,330	26,440	26,550	26,660	26,770	26,890	12
13	27,090	27,220	27,350	27,490	27,620	27,750	27,880	28,010	28,140	28,260	28,390	28,520	28,640	28,770	28,890	29,010	29,140	29,260	29,380	29,500	29,620	13
14	29,680	29,820	29,970	30,110	30,250	30,390	30,530	30,670	30,810	30,950	31,090	31,220	31,360	31,490	31,620	31,760	31,890	32,020	32,150	32,280	32,410	14
15	32,290	32,450	32,600	32,750	32,910	33,060	33,210	33,360	33,510	33,650	33,800	33,950	34,090	34,240	34,380	34,520	34,660	34,800	34,940	35,080	35,220	15
16	34,930	35,090	35,260	35,420	35,580	35,740	35,900	36,060	36,220	36,380	36,530	36,690	36,840	36,990	37,150	37,300	37,450	37,600	37,750	37,890	38,040	16
17	40,550	40,720	40,890	41,060	41,220	41,390	41,550	41,720	41,880	42,040	42,210	42,370	42,530	42,690	42,850	43,010	43,170	43,320	43,480	43,640	43,800	17
18	46,180	46,350	46,530	46,700	46,870	47,040	47,210	47,380	47,540	47,710	47,880	48,050	48,220	48,380	48,550	48,720	48,890	49,050	49,220	49,380	49,550	18
19	51,810	51,990	52,160	52,330	52,510	52,680	52,860	53,030	53,210	53,380	53,560	53,730	53,910	54,080	54,250	54,430	54,600	54,780	54,950	55,130	55,300	19
20	57,960	58,130	58,300	58,460	58,620	58,790	58,950	59,110	59,270	59,430	59,600	59,760	59,920	60,080	60,240	60,390	60,550	60,710	60,870	61,030	61,180	20
21	64,110	64,280	64,430	64,590	64,740	64,890	65,040	65,190	65,340	65,490	65,640	65,780	65,930	66,070	66,220	66,360	66,500	66,640	66,780	66,920	67,060	21
22	70,270	70,430	70,570	70,710	70,850	70,990	71,130	71,270	71,410	71,540	71,680	71,810	71,940	72,070	72,200	72,320	72,450	72,580	72,700	72,820	72,940	22
23	70,270	70,510	70,750	70,990	71,230	71,460	71,690	71,930	72,160	72,390	72,620	72,850	73,080	73,310	73,530	73,760	73,990	74,210	74,430	74,660	74,880	23
24	70,270	70,600	70,930	71,270	71,600	71,930	72,260	72,580	72,910	73,240	73,570	73,890	74,220	74,550	74,870	75,200	75,520	75,840	76,170	76,490	76,810	24
25	70,270	70,690	71,120	71,540	71,970	72,390	72,820	73,240	73,670	74,090	74,510	74,940	75,360	75,780	76,210	76,630	77,060	77,480	77,900	78,330	78,750	25
26	70,270	70,690	71,120	71,540	71,970	72,390	72,820	73,240	73,670	74,090	74,510	74,940	75,360	75,780	76,210	76,630	77,060	77,480	77,900	78,330	78,750	26
27	70,270	70,690	71,120	71,540	71,970	72,390	72,820	73,240	73,670	74,090	74,510	74,940	75,360	75,780	76,210	76,630	77,060	77,480	77,900	78,330	78,750	27
28	70,270	70,690	71,120	71,540	71,970	72,390	72,820	73,240	73,670	74,090	74,510	74,940	75,360	75,780	76,210	76,630	77,060	77,480	77,900	78,330	78,750	28

GATE ARRANGEMENT	HEADWATER ELEVATION																				GATE ARRANGEMENT
	806.0	806.1	806.2	806.3	806.4	806.5	806.6	806.7	806.8	806.9	807.0	807.1	807.2	807.3	807.4	807.5	807.6	807.7	807.8	807.9	808.0	
1	1,810	1,810	1,820	1,830	1,840	1,840	1,850	1,860	1,870	1,870	1,880	1,890	1,890	1,900	1,910	1,920	1,920	1,930	1,940	1,940	1,950	1
2	3,890	3,900	3,920	3,930	3,950	3,970	3,980	4,000	4,010	4,030	4,040	4,060	4,080	4,090	4,110	4,120	4,140	4,150	4,170	4,180	4,200	2
3	5,980	6,010	6,030	6,060	6,080	6,110	6,130	6,160	6,180	6,200	6,230	6,250	6,280	6,300	6,320	6,350	6,370	6,390	6,420	6,440	6,460	3
4	8,180	8,220	8,250	8,280	8,310	8,340	8,380	8,410	8,440	8,470	8,500	8,530	8,560	8,590	8,620	8,650	8,680	8,710	8,740	8,770	8,800	4
5	10,430	10,480	10,520	10,560	10,610	10,650	10,690	10,740	10,780	10,820	10,860	10,900	10,940	10,990	11,030	11,070	11,110	11,150	11,190	11,230	11,270	5
6	12,410	12,470	12,520	12,570	12,630	12,680	12,730	12,790	12,840	12,890	12,940	12,990	13,040	13,090	13,140	13,190	13,240	13,290	13,340	13,390	13,440	6
7	14,760	14,830	14,890	14,960	15,020	15,080	15,140	15,200	15,270	15,330	15,390	15,450	15,510	15,570	15,630	15,690	15,740	15,800	15,860	15,920	15,980	7
8	17,070	17,140	17,220	17,290	17,360	17,430	17,500	17,570	17,640	17,710	17,780	17,850	17,920	17,990	18,050	18,120	18,190	18,260	18,320	18,390	18,450	8
9	19,490	19,570	19,650	19,730	19,810	19,890	19,960	20,040	20,120	20,190	20,270	20,350	20,420	20,500	20,570	20,650	20,720	20,790	20,870	20,940	21,020	9
10	21,900	21,990	22,080	22,160	22,250	22,330	22,420	22,500	22,590	22,670	22,760	22,840	22,920	23,000	23,080	23,170	23,250	23,330	23,410	23,490	23,570	10
11	24,310	24,400	24,500	24,590	24,680	24,770	24,860	24,950	25,040	25,130	25,220	25,310	25,400	25,490	25,570	25,660	25,750	25,840	25,920	26,010	26,100	11
12	26,890	27,000	27,100	27,210	27,320	27,430	27,540	27,640	27,750	27,850	27,960	28,060	28,170	28,270	28,370	28,480	28,580	28,680	28,780	28,880	28,980	12
13	29,620	29,740	29,850	29,970	30,090	30,200	30,320	30,440	30,550	30,670	30,780	30,890	31,010	31,120	31,230	31,340	31,450	31,560	31,670	31,790	31,900	13
14	32,410	32,540	32,660	32,790	32,920	33,040	33,170	33,290	33,410	33,540	33,660	33,780	33,900	34,030	34,150	34,270	34,390	34,510	34,630	34,750	34,860	14
15	35,220	35,360	35,500	35,630	35,770	35,910	36,040	36,170	36,310	36,440	36,570	36,700	36,840	36,970	37,100	37,230	37,360	37,490	37,610	37,740	37,870	15
16	38,040	38,190	38,330	38,480	38,620	38,770	38,910	39,050	39,190	39,340	39,480	39,620	39,760	39,900	40,030	40,170	40,310	40,450	40,590	40,720	40,860	16
17	43,800	43,950	44,110	44,260	44,420	44,570	44,720	44,880	45,030	45,180	45,340	45,490	45,640	45,790	45,940	46,090	46,240	46,390	46,540	46,690	46,850	17
18	49,550	49,710	49,880	50,050	50,210	50,370	50,540	50,700	50,870	51,030	51,200	51,360	51,520	51,690	51,850	52,010	52,180	52,340	52,500	52,670	52,830	18
19	55,300	55,480	55,650	55,830	56,000	56,180	56,350	56,530	56,700	56,880	57,060	57,230	57,410	57,580	57,760	57,930	58,110	58,280	58,460	58,640	58,810	19
20	61,180	61,340	61,490	61,650	61,800	61,950	62,100	62,260	62,410	62,560	62,710	62,870	63,020	63,170	63,320	63,470	63,630	63,780	63,930	64,080	64,240	20
21	67,060	67,200	67,330	67,460	67,590	67,720	67,860	67,990	68,120	68,240	68,370	68,500	68,630	68,760	68,890	69,020	69,140	69,270	69,400	69,530	69,660	21
22	72,940	73,050	73,170	73,280	73,390	73,500	73,610	73,710	73,820	73,930	74,030	74,140	74,240	74,350	74,450	74,560	74,660	74,770	74,870	74,980	75,080	22
23	74,880	75,090	75,310	75,530	75,740	75,960	76,170	76,380	76,590	76,810	77,020	77,230	77,440	77,650	77,870	78,080	78,290	78,500	78,710	78,930	79,140	23
24	76,810	77,130	77,450	77,770	78,090	78,410	78,730	79,050	79,370	79,690	80,000	80,320	80,640	80,960	81,280	81,600	81,920	82,230	82,550	82,870	83,190	24
25	78,750	79,170	79,600	80,020	80,440	80,870	81,290	81,720	82,140	82,570	82,990	83,420	83,840	84,270	84,690	85,120	85,540	85,970	86,390	86,820	87,250	25
26	78,750	79,170	79,600	80,020	80,440	80,870	81,290	81,720	82,140	82,570	82,990	83,420	83,840	84,270	84,690	85,120	85,540	85,970	86,390	86,820	87,250	26
27	78,750	79,170	79,600	80,020	80,440	80,870	81,290	81,720	82,140	82,570	82,990	83,420	83,840	84,270	84,690	85,120	85,540	85,970	86,390	86,820	87,250	27
28	78,750	79,170	79,600	80,020	80,440	80,870	81,290	81,720	82,140	82,570	82,990	83,420	83,840	84,270	84,690	85,120	85,540	85,970	86,390	86,820	87,250	28

MAY 2008

HEADWATER 804 to 808
TAILWATER 793.51 to 794.5

TELLICO DAM
SPILLWAY DISCHARGE
IN CUBIC FEET PER SECOND

HEADWATER ELEVATION

GATE ARRANGEMENT	808.0	808.1	808.2	808.3	808.4	808.5	808.6	808.7	808.8	808.9	809.0	809.1	809.2	809.3	809.4	809.5	809.6	809.7	809.8	809.9	810.0	GATE ARRANGEMENT
1	1,950	1,960	1,970	1,970	1,980	1,990	1,990	2,000	2,010	2,010	2,020	2,030	2,030	2,040	2,050	2,050	2,060	2,070	2,070	2,080	2,090	1
2	4,200	4,210	4,230	4,240	4,260	4,270	4,290	4,300	4,310	4,330	4,340	4,360	4,370	4,390	4,400	4,420	4,430	4,440	4,460	4,470	4,490	2
3	6,460	6,490	6,510	6,530	6,560	6,580	6,600	6,620	6,650	6,670	6,690	6,710	6,740	6,760	6,780	6,800	6,820	6,850	6,870	6,890	6,910	3
4	8,800	8,830	8,860	8,890	8,920	8,950	8,980	9,000	9,030	9,060	9,090	9,120	9,150	9,170	9,200	9,230	9,260	9,290	9,320	9,340	9,370	4
5	11,270	11,310	11,350	11,390	11,430	11,470	11,510	11,550	11,590	11,620	11,660	11,700	11,740	11,780	11,820	11,860	11,900	11,930	11,970	12,010	12,050	5
6	13,440	13,490	13,530	13,580	13,630	13,680	13,720	13,770	13,810	13,860	13,910	13,950	14,000	14,040	14,090	14,130	14,170	14,220	14,260	14,310	14,350	6
7	15,980	16,030	16,090	16,150	16,200	16,260	16,310	16,370	16,430	16,480	16,540	16,590	16,640	16,700	16,750	16,810	16,860	16,910	16,970	17,020	17,070	7
8	18,450	18,520	18,590	18,650	18,720	18,780	18,850	18,910	18,980	19,040	19,100	19,170	19,230	19,290	19,360	19,420	19,480	19,540	19,610	19,670	19,730	8
9	21,020	21,090	21,160	21,230	21,310	21,380	21,450	21,520	21,600	21,670	21,740	21,810	21,880	21,950	22,020	22,100	22,170	22,240	22,310	22,380	22,450	9
10	23,570	23,650	23,730	23,810	23,890	23,970	24,050	24,130	24,210	24,290	24,370	24,450	24,520	24,600	24,680	24,760	24,840	24,920	24,990	25,070	25,150	10
11	26,100	26,180	26,270	26,360	26,440	26,530	26,620	26,700	26,790	26,870	26,960	27,050	27,130	27,220	27,300	27,390	27,480	27,560	27,650	27,730	27,820	11
12	28,980	29,080	29,180	29,280	29,380	29,480	29,580	29,680	29,780	29,880	29,980	30,070	30,170	30,270	30,360	30,460	30,560	30,650	30,750	30,840	30,940	12
13	31,900	32,010	32,120	32,220	32,330	32,440	32,550	32,660	32,770	32,870	32,980	33,090	33,200	33,300	33,410	33,510	33,620	33,730	33,830	33,930	34,040	13
14	34,860	34,980	35,100	35,220	35,340	35,450	35,570	35,690	35,810	35,920	36,040	36,150	36,270	36,380	36,500	36,610	36,730	36,840	36,950	37,070	37,180	14
15	37,870	38,000	38,130	38,250	38,380	38,510	38,630	38,760	38,880	39,010	39,130	39,260	39,380	39,510	39,630	39,750	39,880	40,000	40,120	40,240	40,370	15
16	40,860	41,000	41,130	41,270	41,410	41,540	41,680	41,810	41,950	42,080	42,220	42,350	42,490	42,620	42,750	42,890	43,020	43,150	43,280	43,420	43,550	16
17	46,850	46,990	47,140	47,290	47,440	47,590	47,740	47,890	48,040	48,190	48,340	48,480	48,630	48,780	48,930	49,070	49,220	49,370	49,510	49,660	49,800	17
18	52,830	52,990	53,150	53,320	53,480	53,640	53,810	53,970	54,130	54,290	54,450	54,620	54,780	54,940	55,100	55,260	55,420	55,580	55,740	55,900	56,060	18
19	58,810	58,990	59,160	59,340	59,520	59,690	59,870	60,040	60,220	60,400	60,570	60,750	60,920	61,100	61,270	61,450	61,620	61,800	61,970	62,140	62,310	19
20	64,240	64,410	64,580	64,750	64,920	65,090	65,260	65,430	65,610	65,780	65,950	66,120	66,290	66,470	66,640	66,810	66,980	67,150	67,330	67,500	67,670	20
21	69,660	69,830	69,990	70,160	70,320	70,490	70,660	70,820	70,990	71,160	71,330	71,500	71,670	71,830	72,000	72,170	72,340	72,510	72,680	72,850	73,020	21
22	75,080	75,240	75,400	75,560	75,720	75,890	76,050	76,210	76,380	76,540	76,700	76,870	77,040	77,200	77,370	77,540	77,700	77,870	78,040	78,210	78,380	22
23	79,140	79,390	79,640	79,880	80,130	80,380	80,640	80,890	81,140	81,390	81,640	81,900	82,150	82,410	82,660	82,920	83,170	83,430	83,680	83,940	84,200	23
24	83,190	83,530	83,870	84,210	84,540	84,880	85,220	85,560	85,900	86,240	86,580	86,930	87,270	87,610	87,950	88,290	88,640	88,980	89,320	89,670	90,010	24
25	87,250	87,670	88,100	88,530	88,950	89,380	89,810	90,240	90,670	91,100	91,520	91,950	92,380	92,810	93,240	93,670	94,100	94,530	94,970	95,400	95,830	25
26	87,250	87,670	88,100	88,530	88,950	89,380	89,810	90,240	90,670	91,100	91,520	91,950	92,380	92,810	93,240	93,670	94,100	94,530	94,970	95,400	95,830	26
27	87,250	87,670	88,100	88,530	88,950	89,380	89,810	90,240	90,670	91,100	91,520	91,950	92,380	92,810	93,240	93,670	94,100	94,530	94,970	95,400	95,830	27
28	87,250	87,670	88,100	88,530	88,950	89,380	89,810	90,240	90,670	91,100	91,520	91,950	92,380	92,810	93,240	93,670	94,100	94,530	94,970	95,400	95,830	28

HEADWATER ELEVATION

GATE ARRANGEMENT	810.0	810.1	810.2	810.3	810.4	810.5	810.6	810.7	810.8	810.9	811.0	811.1	811.2	811.3	811.4	811.5	811.6	811.7	811.8	811.9	812.0	GATE ARRANGEMENT
1	2,090	2,090	2,100	2,110	2,110	2,120	2,120	2,130	2,140	2,140	2,150	2,160	2,160	2,170	2,180	2,180	2,190	2,190	2,200	2,210	2,210	1
2	4,490	4,500	4,510	4,530	4,540	4,560	4,570	4,580	4,600	4,610	4,620	4,640	4,650	4,670	4,680	4,690	4,710	4,720	4,730	4,750	4,760	2
3	6,910	6,930	6,950	6,970	7,000	7,020	7,040	7,060	7,080	7,100	7,120	7,140	7,160	7,190	7,210	7,230	7,250	7,270	7,290	7,310	7,330	3
4	9,370	9,400	9,430	9,450	9,480	9,510	9,540	9,570	9,590	9,620	9,650	9,680	9,710	9,730	9,760	9,790	9,820	9,840	9,870	9,900	9,930	4
5	12,050	12,090	12,120	12,160	12,200	12,240	12,280	12,310	12,350	12,390	12,430	12,460	12,500	12,540	12,580	12,610	12,650	12,690	12,720	12,760	12,800	5
6	14,350	14,390	14,440	14,480	14,530	14,570	14,610	14,660	14,700	14,740	14,790	14,830	14,870	14,920	14,960	15,000	15,050	15,090	15,130	15,180	15,220	6
7	17,070	17,120	17,180	17,230	17,280	17,330	17,390	17,440	17,490	17,540	17,590	17,650	17,700	17,750	17,800	17,850	17,910	17,960	18,010	18,060	18,110	7
8	19,730	19,790	19,850	19,920	19,980	20,040	20,100	20,160	20,220	20,280	20,340	20,400	20,460	20,520	20,580	20,640	20,700	20,760	20,820	20,880	20,940	8
9	22,450	22,520	22,590	22,660	22,730	22,800	22,860	22,930	23,000	23,070	23,140	23,210	23,280	23,340	23,410	23,480	23,550	23,610	23,680	23,750	23,820	9
10	25,150	25,220	25,300	25,380	25,450	25,530	25,610	25,680	25,760	25,830	25,910	25,980	26,060	26,130	26,210	26,280	26,360	26,430	26,510	26,580	26,650	10
11	27,820	27,900	27,980	28,070	28,150	28,240	28,320	28,400	28,490	28,570	28,650	28,740	28,820	28,900	28,980	29,060	29,140	29,230	29,310	29,390	29,470	11
12	30,940	31,030	31,120	31,220	31,310	31,400	31,500	31,590	31,680	31,770	31,860	31,950	32,040	32,130	32,220	32,310	32,400	32,490	32,580	32,660	32,750	12
13	34,040	34,140	34,250	34,350	34,450	34,550	34,660	34,760	34,860	34,960	35,060	35,160	35,260	35,360	35,460	35,560	35,660	35,750	35,850	35,950	36,050	13
14	37,180	37,290	37,410	37,520	37,630	37,740	37,850	37,960	38,070	38,180	38,290	38,400	38,510	38,610	38,720	38,830	38,940	39,040	39,150	39,260	39,360	14
15	40,370	40,490	40,610	40,730	40,850	40,970	41,090	41,210	41,330	41,440	41,560	41,680	41,800	41,910	42,030	42,150	42,260	42,380	42,490	42,610	42,720	15
16	43,550	43,680	43,810	43,940	44,070	44,200	44,330	44,460	44,590	44,720	44,850	44,970	45,100	45,230	45,360	45,480	45,610	45,730	45,860	45,980	46,110	16
17	49,800	49,950	50,090	50,240	50,380	50,530	50,670	50,810	50,950	51,100	51,240	51,380	51,520	51,660	51,800	51,940	52,080	52,210	52,350	52,490	52,620	17
18	56,060	56,220	56,380	56,530	56,690	56,850	57,010	57,160	57,320	57,470	57,630	57,780	57,940	58,090	58,240	58,390	58,540	58,690	58,840	58,990	59,140	18
19	62,310	62,490	62,660	62,830	63,000	63,170	63,340	63,510	63,680	63,850	64,020	64,190	64,350	64,520	64,680	64,850	65,010	65,170	65,340	65,500	65,660	19
20	67,670	67,840	68,010	68,180	68,350	68,520	68,690	68,860	69,030	69,200	69,370	69,540	69,700	69,870	70,040	70,200	70,370	70,530	70,690	70,860	71,020	20
21	73,020	73,190	73,360	73,530	73,700	73,870	74,040	74,210	74,380	74,550	74,720	74,890	75,050	75,220	75,390	75,550	75,720	75,890	76,050	76,210	76,380	21
22	78,380	78,550	78,720	78,890	79,050	79,220	79,390	79,560	79,730	79,900	80,070	80,240	80,410	80,570	80,740	80,910	81,080	81,240	81,410	81,570	81,740	22
23	84,200	84,450	84,710	84,970	85,220	85,480	85,740	85,990	86,230	86,370	86,520	86,660	86,810	86,950	87,100	87,240	87,380	87,520	87,660	87,800	87,940	23
24	90,010	90,360	90,700	91,050	91,390	91,740	92,080	92,430	92,720	92,850	92,970	93,090	93,210	93,330	93,450	93,570	93,690	93,800	93,920	94,030	94,140	24
25	95,830	96,260	96,690	97,130	97,560	97,990	98,430	98,860	99,220	99,320	99,420	99,520	99,620	99,710	99,810	99,900	99,990	100,100	100,200	100,300	100,300	25
26	95,830	96,260	96,690	97,130	97,560	97,990	98,430	98,860	99,240	99,460	99,670	99,880	100,100	100,300	100,500	100,700	100,900	101,100	101,300	101,500	101,700	26
27	95,830	96,260	96,690	97,130	97,560	97,990	98,430	98,860	99,270	99,590	99,920	100,200	100,600	100,900	101,200	101,500	101,900	102,200	102,500	102,800	103,100	27
28	95,830	96,260	96,690	97,130	97,560	97,990	98,430	98,860	99,290	99,730	100,200	100,600	101,000	101,500	101,900	102,300	102,800	103,200	103,700	104,100	104,500	28

HEADWATER 808 to 812
TAILWATER 793.51 to 794.5

MAY 2008

TELLICO DAM
SPILLWAY DISCHARGE
IN CUBIC FEET PER SECOND

GATE ARRANGEMENT	HEADWATER ELEVATION																				GATE ARRANGEMENT
	812.0	812.1	812.2	812.3	812.4	812.5	812.6	812.7	812.8	812.9	813.0	813.1	813.2	813.3	813.4	813.5	813.6	813.7	813.8	813.9	814.0	
1	2,210	2,220	2,220	2,230	2,240	2,240	2,250	2,260	2,260	2,270	2,270	2,280	2,290	2,290	2,300	2,300	2,310	2,310	2,320	2,330	2,330	1
2	4,760	4,770	4,780	4,800	4,810	4,820	4,840	4,850	4,860	4,880	4,890	4,900	4,910	4,930	4,940	4,950	4,970	4,980	4,990	5,000	5,020	2
3	7,330	7,350	7,370	7,390	7,410	7,430	7,450	7,470	7,490	7,510	7,530	7,550	7,570	7,590	7,610	7,630	7,650	7,670	7,690	7,710	7,730	3
4	9,930	9,960	9,980	10,010	10,040	10,070	10,100	10,120	10,150	10,180	10,210	10,240	10,260	10,290	10,320	10,350	10,380	10,410	10,430	10,460	10,490	4
5	12,800	12,830	12,870	12,910	12,950	12,980	13,020	13,060	13,090	13,130	13,170	13,200	13,240	13,270	13,310	13,350	13,380	13,420	13,460	13,490	13,530	5
6	15,220	15,270	15,310	15,350	15,400	15,440	15,490	15,530	15,580	15,620	15,670	15,710	15,760	15,800	15,850	15,890	15,940	15,980	16,030	16,080	16,120	6
7	18,110	18,160	18,220	18,270	18,320	18,370	18,420	18,480	18,530	18,580	18,630	18,680	18,740	18,790	18,840	18,890	18,940	18,990	19,050	19,100	19,150	7
8	20,940	21,000	21,060	21,110	21,170	21,230	21,290	21,350	21,410	21,470	21,520	21,580	21,640	21,700	21,760	21,810	21,870	21,930	21,980	22,040	22,100	8
9	23,820	23,880	23,950	24,020	24,080	24,150	24,210	24,280	24,350	24,410	24,480	24,540	24,610	24,670	24,740	24,800	24,860	24,930	24,990	25,060	25,120	9
10	26,650	26,730	26,800	26,870	26,940	27,020	27,090	27,160	27,230	27,300	27,380	27,450	27,520	27,590	27,660	27,730	27,800	27,870	27,940	28,010	28,080	10
11	29,470	29,550	29,630	29,700	29,780	29,860	29,940	30,020	30,100	30,170	30,250	30,330	30,400	30,480	30,560	30,630	30,710	30,780	30,860	30,930	31,010	11
12	32,750	32,840	32,920	33,010	33,100	33,180	33,270	33,350	33,430	33,520	33,600	33,690	33,770	33,850	33,930	34,020	34,100	34,180	34,260	34,340	34,420	12
13	36,050	36,140	36,240	36,330	36,430	36,520	36,620	36,710	36,800	36,900	36,990	37,080	37,170	37,270	37,360	37,450	37,540	37,630	37,720	37,810	37,900	13
14	39,360	39,470	39,570	39,670	39,780	39,880	39,980	40,090	40,190	40,290	40,390	40,490	40,590	40,690	40,790	40,890	40,990	41,090	41,190	41,290	41,390	14
15	42,720	42,840	42,950	43,060	43,180	43,290	43,400	43,510	43,620	43,740	43,850	43,960	44,070	44,180	44,290	44,400	44,510	44,620	44,730	44,840	44,940	15
16	46,110	46,230	46,360	46,480	46,600	46,720	46,850	46,970	47,090	47,210	47,330	47,450	47,570	47,690	47,810	47,930	48,050	48,170	48,290	48,410	48,530	16
17	52,620	52,760	52,900	53,030	53,160	53,300	53,430	53,560	53,700	53,830	53,960	54,090	54,220	54,350	54,480	54,610	54,740	54,860	54,990	55,120	55,250	17
18	59,140	59,290	59,440	59,580	59,730	59,870	60,020	60,160	60,300	60,440	60,580	60,730	60,870	61,000	61,140	61,280	61,420	61,560	61,690	61,830	61,960	18
19	65,660	65,820	65,980	66,130	66,290	66,440	66,600	66,750	66,910	67,060	67,210	67,360	67,510	67,660	67,810	67,960	68,100	68,250	68,390	68,540	68,680	19
20	71,020	71,180	71,340	71,500	71,660	71,810	71,970	72,130	72,280	72,440	72,590	72,740	72,900	73,050	73,200	73,350	73,500	73,650	73,800	73,940	74,090	20
21	76,380	76,540	76,700	76,860	77,020	77,180	77,340	77,500	77,660	77,810	77,970	78,130	78,280	78,440	78,590	78,740	78,900	79,050	79,200	79,350	79,500	21
22	81,740	81,900	82,070	82,230	82,390	82,550	82,710	82,870	83,030	83,190	83,350	83,510	83,670	83,820	83,980	84,140	84,290	84,450	84,600	84,750	84,910	22
23	87,940	88,080	88,230	88,370	88,510	88,650	88,790	88,930	89,070	89,210	89,350	89,480	89,620	89,750	89,890	90,020	90,150	90,290	90,420	90,550	90,680	23
24	94,140	94,270	94,390	94,510	94,630	94,760	94,870	94,990	95,110	95,230	95,340	95,460	95,570	95,680	95,800	95,910	96,020	96,130	96,240	96,340	96,450	24
25	100,300	100,500	100,600	100,700	100,800	100,900	101,000	101,100	101,100	101,200	101,300	101,400	101,500	101,600	101,700	101,800	101,900	102,000	102,100	102,100	102,200	25
26	101,700	102,000	102,200	102,400	102,600	102,800	103,000	103,200	103,500	103,700	103,900	104,100	104,300	104,500	104,700	104,900	105,100	105,300	105,500	105,700	105,900	26
27	103,100	103,500	103,800	104,100	104,400	104,800	105,100	105,400	105,800	106,100	106,400	106,700	107,100	107,400	107,700	108,000	108,400	108,700	109,000	109,300	109,700	27
28	104,500	105,000	105,400	105,900	106,300	106,700	107,200	107,600	108,100	108,500	108,900	109,400	109,800	110,300	110,700	111,200	111,600	112,000	112,500	112,900	113,400	28

GATE ARRANGEMENT	HEADWATER ELEVATION																				GATE ARRANGEMENT
	814.0	814.1	814.2	814.3	814.4	814.5	814.6	814.7	814.8	814.9	815.0	815.1	815.2	815.3	815.4	815.5	815.6	815.7	815.8	815.9	816.0	
1	2,330	2,340	2,340	2,350	2,360	2,360	2,370	2,370	2,380	2,380	2,390	2,400	2,400	2,410	2,410	2,420						1
2	5,020	5,030	5,040	5,050	5,070	5,080	5,090	5,100	5,120	5,130	5,140	5,150	5,160	5,180	5,190	5,200	5,210	5,220	5,240	5,250	5,260	2
3	7,730	7,750	7,760	7,780	7,800	7,820	7,840	7,860	7,880	7,900	7,920	7,940	7,950	7,970	7,990	8,010	8,030	8,050	8,070	8,080	8,100	3
4	10,490	10,520	10,550	10,580	10,610	10,630	10,660	10,690	10,720	10,750	10,780	10,810	10,830	10,860	10,890	10,920	10,950	10,980	11,010	11,040	11,070	4
5	13,530	13,560	13,600	13,640	13,670	13,710	13,740	13,780	13,810	13,850	13,890	13,920	13,960	13,990	14,030	14,060	14,100	14,130	14,170	14,200	14,240	5
6	16,120	16,170	16,210	16,260	16,300	16,350	16,390	16,440	16,480	16,530	16,570	16,610	16,660	16,700	16,750	16,790	16,840	16,880	16,920	16,970	17,010	6
7	19,150	19,200	19,250	19,300	19,350	19,400	19,460	19,510	19,560	19,610	19,660	19,710	19,760	19,810	19,850	19,900	19,950	20,000	20,050	20,100	20,150	7
8	22,100	22,150	22,210	22,270	22,320	22,380	22,440	22,490	22,550	22,600	22,660	22,710	22,770	22,820	22,870	22,930	22,980	23,040	23,090	23,140	23,200	8
9	25,120	25,180	25,250	25,310	25,370	25,430	25,500	25,560	25,620	25,680	25,740	25,800	25,860	25,920	25,980	26,040	26,100	26,160	26,220	26,280	26,340	9
10	28,080	28,150	28,220	28,290	28,360	28,430	28,490	28,560	28,630	28,700	28,770	28,830	28,900	28,970	29,040	29,100	29,170	29,240	29,300	29,370	29,440	10
11	31,010	31,080	31,160	31,230	31,310	31,380	31,460	31,530	31,600	31,680	31,750	31,830	31,900	31,970	32,050	32,120	32,190	32,270	32,340	32,410	32,490	11
12	34,420	34,510	34,590	34,670	34,750	34,830	34,910	34,990	35,060	35,140	35,220	35,300	35,380	35,460	35,540	35,620	35,700	35,770	35,850	35,930	36,010	12
13	37,900	37,990	38,080	38,170	38,260	38,350	38,440	38,520	38,610	38,700	38,790	38,880	38,970	39,050	39,140	39,230	39,320	39,400	39,490	39,580	39,670	13
14	41,390	41,490	41,590	41,690	41,790	41,880	41,980	42,080	42,180	42,280	42,370	42,470	42,570	42,670	42,760	42,860	42,960	43,060	43,150	43,250	43,350	14
15	44,940	45,050	45,160	45,270	45,380	45,490	45,600	45,700	45,810	45,920	46,030	46,140	46,250	46,350	46,460	46,570	46,680	46,790	46,900	47,010	47,110	15
16	48,530	48,650	48,760	48,880	49,000	49,120	49,240	49,360	49,470	49,590	49,710	49,830	49,950	50,070	50,190	50,300	50,420	50,540	50,660	50,780	50,900	16
17	55,250	55,370	55,500	55,630	55,750	55,880	56,000	56,130	56,250	56,380	56,500	56,630	56,750	56,880	57,000	57,120	57,250	57,370	57,500	57,620	57,740	17
18	61,960	62,100	62,230	62,370	62,500	62,630	62,770	62,900	63,030	63,160	63,290	63,420	63,560	63,690	63,810	63,940	64,070	64,200	64,330	64,460	64,590	18
19	68,680	68,830	68,970	69,110	69,250	69,390	69,530	69,670	69,810	69,950	70,090	70,220	70,360	70,490	70,630	70,760	70,900	71,030	71,170	71,300	71,430	19
20	74,090	74,240	74,380	74,530	74,670	74,820	74,960	75,100	75,240	75,390	75,530	75,670	75,810	75,950	76,090	76,220	76,360	76,500	76,640	76,770	76,910	20
21	79,500	79,650	79,800	79,950	80,090	80,240	80,390	80,530	80,680	80,820	80,970	81,110	81,260	81,400	81,540	81,680	81,830	81,970	82,110	82,250	82,390	21
22	84,910	85,060	85,210	85,360	85,510	85,660	85,810	85,960	86,110	86,260	86,410	86,560	86,710	86,850	87,000	87,150	87,290	87,440	87,580	87,730	87,870	22
23	90,680	90,820	90,960	91,100	91,240	91,370	91,510	91,650	91,780	91,920	92,050	92,190	92,320	92,450	92,590	92,720	92,850	92,980	93,110	93,240	93,370	23
24	96,450	96,580	96,700	96,830	96,960	97,080	97,210	97,330	97,450	97,570	97,690	97,820	97,940	98,050	98,170	98,290	98,410	98,520	98,640	98,760	98,870	24
25	102,200	102,300	102,500	102,600	102,700	102,800	102,900	103,000	103,100	103,200	103,300	103,400	103,500	103,700	103,800	103,900	104,000	104,100	104,200	104,300	104,400	25
26	105,900	106,200	106,400	106,600	106,800	107,100	107,300	107,500	107,700	108,000	109,200	109,200	109,300	109,400	109,400	109,500	109,600	109,700	109,700	109,800	109,900	26
27	109,700	110,000	110,300	110,700	111,000	111,300	111,700	112,000	112,300	112,700	115,000	115,000	115,000	115,100	115,100	115,200	115,200	115,200	115,300	115,300	115,300	27
28	113,400	113,800	114,300	114,700	115,200	115,600	116,100	116,500	117,000	117,400	120,800	120,800	120,800	120,800	120,800	120,800	120,800	120,800	120,800	120,800	120,800	28

MAY 2008

See special instruction for preventing gate overflow on page 2.

HEADWATER 812 to 816
TAILWATER 793.51 to 794.5

TELLICO DAM
SPILLWAY DISCHARGE
IN CUBIC FEET PER SECOND

GATE ARRANGEMENT	HEADWATER ELEVATION																				GATE ARRANGEMENT
	816.0	816.1	816.2	816.3	816.4	816.5	816.6	816.7	816.8	816.9	817.0	817.1	817.2	817.3	817.4	817.5	817.6	817.7	817.8	817.9	818.0	
1																						1
2	5,260	5,270	5,280																			2
3	8,100	8,120	8,140	8,160	8,180	8,190	8,210	8,230	8,250	8,270	8,290											3
4	11,070	11,090	11,120	11,150	11,180	11,210	11,240	11,270	11,300	11,320	11,350	11,570	11,930	12,400	12,960	13,590	14,290	15,050				4
5	14,240	14,270	14,310	14,340	14,380	14,410	14,450	14,480	14,510	14,550	14,580	14,800	15,180	15,650	16,210	16,850	17,550	18,320	19,150	20,030	20,970	5
6	17,010	17,050	17,090	17,140	17,180	17,220	17,260	17,300	17,340	17,390	17,430	17,650	18,030	18,520	19,080	19,730	20,440	21,210	22,040	22,930	23,870	6
7	20,150	20,190	20,240	20,290	20,330	20,380	20,430	20,470	20,520	20,570	20,610	20,840	21,230	21,710	22,280	22,930	23,650	24,420	25,260	26,150	27,100	7
8	23,200	23,250	23,300	23,350	23,400	23,460	23,510	23,560	23,610	23,660	23,710	23,950	24,340	24,830	25,410	26,060	26,780	27,560	28,400	29,300	30,250	8
9	26,340	26,400	26,450	26,510	26,570	26,620	26,680	26,740	26,790	26,850	26,910	27,150	27,540	28,040	28,620	29,280	30,000	30,790	31,640	32,540	33,500	9
10	29,440	29,500	29,570	29,630	29,700	29,760	29,830	29,890	29,960	30,020	30,090	30,340	30,740	31,250	31,840	32,500	33,240	34,030	34,890	35,800	36,770	10
11	32,490	32,560	32,630	32,710	32,780	32,860	32,930	33,000	33,080	33,150	33,220	33,480	33,890	34,410	35,010	35,690	36,430	37,240	38,100	39,030	40,000	11
12	36,010	36,090	36,170	36,240	36,320	36,400	36,480	36,560	36,630	36,710	36,790	37,050	37,470	37,990	38,590	39,270	40,020	40,830	41,700	42,630	43,610	12
13	39,670	39,760	39,840	39,930	40,020	40,110	40,200	40,280	40,370	40,460	40,550	40,820	41,250	41,780	42,390	43,080	43,840	44,660	45,540	46,480	47,470	13
14	43,350	43,450	43,550	43,640	43,740	43,840	43,940	44,040	44,140	44,230	44,330	44,620	45,050	45,600	46,220	46,920	47,690	48,520	49,420	50,360	51,370	14
15	47,110	47,220	47,330	47,440	47,550	47,660	47,770	47,880	47,990	48,100	48,210	48,510	48,960	49,510	50,150	50,860	51,640	52,490	53,390	54,350	55,370	15
16	50,900	51,020	51,140	51,260	51,380	51,500	51,620	51,740	51,870	51,990	52,110	52,420	52,880	53,440	54,090	54,820	55,610	56,470	57,380	58,350	59,380	16
17	57,740	57,870	57,990	58,120	58,240	58,360	58,490	58,610	58,730	58,860	58,980	59,290	59,750	60,320	60,970	61,700	62,490	63,350	64,270	65,240	66,270	17
18	64,590	64,710	64,840	64,970	65,100	65,220	65,350	65,480	65,600	65,730	65,860	66,170	66,630	67,200	67,850	68,580	69,370	70,230	71,150	72,120	73,150	18
19	71,430	71,560	71,690	71,820	71,950	72,080	72,210	72,340	72,470	72,600	72,730	73,040	73,510	74,080	74,730	75,460	76,260	77,120	78,030	79,010	80,040	19
20	76,910	77,050	77,180	77,320	77,460	77,590	77,730	77,860	78,000	78,130	78,260	78,580	79,050	79,630	80,290	81,020	81,830	82,690	83,610	84,590	85,630	20
21	82,390	82,530	82,680	82,820	82,960	83,100	83,240	83,380	83,520	83,660	83,800	84,120	84,600	85,180	85,850	86,590	87,400	88,270	89,200	90,180	91,220	21
22	87,870	88,020	88,170	88,310	88,460	88,610	88,750	88,900	89,040	89,190	89,340	89,660	90,150	90,730	91,410	92,150	92,960	93,840	94,780	95,770	96,810	22
23	93,370	93,510	93,660	93,800	93,950	94,090	94,230	94,370	94,520	94,660	94,800	95,120	95,600	96,190	96,850	97,590	98,400	99,270	100,200	101,200	102,200	23
24	98,870	99,010	99,150	99,290	99,430	99,570	99,710	99,850	99,990	100,100	100,300	100,600	101,100	101,600	102,300	103,000	103,800	104,700	105,600	106,600	107,600	24
25	104,400	104,500	104,600	104,800	104,900	105,100	105,200	105,300	105,500	105,600	105,700	106,000	106,500	107,100	107,700	108,500	109,300	110,100	111,100	112,000	113,100	25
26	109,900	110,000	110,000	110,100	110,200	110,300	110,400	110,500	110,600	110,700	110,800	111,100	111,500	112,000	112,700	113,400	114,100	114,900	115,800	116,800	117,800	26
27	115,300	115,400	115,500	115,500	115,600	115,600	115,700	115,700	115,800	115,800	115,900	116,100	116,500	117,000	117,600	118,200	119,000	119,700	120,600	121,500	122,400	27
28	120,800	120,800	120,900	120,900	120,900	120,900	120,900	120,900	120,900	120,900	120,900	121,100	121,500	121,900	122,500	123,100	123,800	124,500	125,300	126,200	127,100	28

GATE ARRANGEMENT	HEADWATER ELEVATION																				GATE ARRANGEMENT
	818.0	818.1	818.2	818.3	818.4	818.5	818.6	818.7	818.8	818.9	819.0	819.1	819.2	819.3	819.4	819.5	819.6	819.7	819.8	819.9	820.0	
1																						1
2																						2
3																						3
4																						4
5	20,970	21,960	23,000	24,080	25,220																	5
6	23,870	24,870	25,910	27,010	28,150	29,330	30,570	31,840	33,160	34,520	35,930	37,370										6
7	27,100	28,100	29,150	30,250	31,390	32,580	33,820	35,100	36,420	37,790	39,200	40,650	42,130	43,660	45,230	46,840	48,490	50,170	51,890			7
8	30,250	31,260	32,310	33,410	34,560	35,760	37,000	38,290	39,620	40,990	42,400	43,850	45,350	46,880	48,460	50,070	51,720	53,410	55,140	56,900	58,710	8
9	33,500	34,510	35,560	36,670	37,830	39,030	40,270	41,560	42,900	44,270	45,690	47,150	48,650	50,190	51,770	53,380	55,040	56,730	58,460	60,230	62,040	9
10	36,770	37,790	38,860	39,970	41,140	42,350	43,610	44,910	46,250	47,640	49,060	50,530	52,040	53,590	55,180	56,810	58,480	60,180	61,920	63,700	65,520	10
11	40,000	41,030	42,110	43,240	44,420	45,640	46,900	48,220	49,570	50,970	52,410	53,890	55,410	56,970	58,570	60,210	61,890	63,600	65,360	67,150	68,970	11
12	43,610	44,640	45,730	46,860	48,040	49,260	50,530	51,850	53,200	54,610	56,050	57,530	59,060	60,620	62,220	63,870	65,550	67,270	69,020	70,820	72,650	12
13	47,470	48,520	49,610	50,750	51,940	53,180	54,460	55,780	57,150	58,560	60,020	61,510	63,050	64,620	66,240	67,890	69,580	71,310	73,080	74,890	76,730	13
14	51,370	52,420	53,530	54,680	55,880	57,130	58,420	59,760	61,140	62,560	64,020	65,530	67,080	68,660	70,290	71,960	73,660	75,400	77,180	79,000	80,850	14
15	55,370	56,430	57,550	58,720	59,930	61,190	62,500	63,840	65,240	66,670	68,150	69,670	71,230	72,830	74,470	76,150	77,860	79,620	81,410	83,240	85,100	15
16	59,380	60,460	61,590	62,770	63,990	65,260	66,580	67,940	69,350	70,790	72,280	73,810	75,390	77,000	78,650	80,340	82,070	83,840	85,640	87,480	89,360	16
17	66,270	67,340	68,470	69,650	70,880	72,150	73,470	74,830	76,230	77,680	79,170	80,700	82,270	83,880	85,530	87,220	88,940	90,710	92,510	94,350	96,230	17
18	73,150	74,230	75,360	76,540	77,760	79,030	80,350	81,710	83,110	84,560	86,050	87,580	89,150	90,760	92,410	94,090	95,820	97,580	99,390	101,200	103,100	18
19	80,040	81,110	82,240	83,420	84,650	85,920	87,230	88,590	90,000	91,440	92,930	94,460	96,030	97,640	99,280	101,000	102,700	104,500	106,300	108,100	110,000	19
20	85,630	86,710	87,850	89,030	90,260	91,540	92,860	94,230	95,640	97,090	98,580	100,100	101,700	103,300	105,000	106,600	108,400	110,100	112,000	113,800	115,700	20
21	91,220	92,310	93,450	94,640	95,880	97,160	98,490	99,860	101,300	102,700	104,200	105,800	107,400	109,000	110,600	112,300	114,100	115,800	117,600	119,500	121,400	21
22	96,810	97,910	99,060	100,300	101,500	102,800	104,100	105,500	106,900	108,400	109,900	111,400	113,000	114,600	116,300	118,000	119,700	121,500	123,300	125,200	127,100	22
23	102,200	103,300	104,500	105,700	106,900	108,200	109,600	111,000	112,400	113,800	115,400	116,900	118,500	120,100	121,800	123,500	125,300	127,000	128,900	130,700	132,600	23
24	107,600	108,800	109,900	111,100	112,400	113,700	115,000	116,400	117,800	119,300	120,800	122,400	124,000	125,600	127,300	129,000	130,800	132,600	134,400	136,300	138,200	24
25	113,100	114,200	115,300	116,600	117,800	119,100	120,500	121,900	123,300	124,800	126,300	127,900	129,500	131,100	132,800	134,500	136,300	138,100	139,900	141,800	143,700	25
26	117,800	118,900	120,100	121,300	122,600	123,900	125,300	126,700	128,100	129,600	131,200	132,700	134,400	136,000	137,700	139,500	141,200	143,000	144,900	146,800	148,700	26
27	122,400	123,600	124,800	126,000	127,300	128,700	130,000	131,500	132,900	134,500	136,000	137,600	139,200	140,900	142,600	144,400	146,200	148,000	149,900	151,800	153,700	27
28	127,100	128,300	129,500	130,800	132,100	133,400	134,800	136,300	137,800	139,300	140,900	142,500	144,100	145,800	147,500	149,300	151,100	153,000	154,800	156,800	158,700	28

HEADWATER 816 to 820
TAILWATER 793.51 to 794.5

See special instruction for preventing gate overflow on page 2.

MAY 2008

TELLICO DAM
SPILLWAY DISCHARGE
IN CUBIC FEET PER SECOND

GATE ARRANGEMENT	HEADWATER ELEVATION																				GATE ARRANGEMENT
	800.0	800.1	800.2	800.3	800.4	800.5	800.6	800.7	800.8	800.9	801.0	801.1	801.2	801.3	801.4	801.5	801.6	801.7	801.8	801.9	802.0	
1	1,170	1,180	1,190	1,200	1,210	1,220	1,230	1,250	1,260	1,270	1,280	1,290	1,300	1,310	1,320	1,330	1,340	1,350	1,360	1,370	1,380	1
2	2,510	2,530	2,560	2,580	2,610	2,630	2,650	2,680	2,700	2,720	2,750	2,770	2,790	2,820	2,840	2,860	2,880	2,900	2,920	2,950	2,970	2
3	3,860	3,900	3,940	3,980	4,010	4,050	4,090	4,120	4,160	4,200	4,230	4,270	4,300	4,340	4,370	4,400	4,440	4,470	4,500	4,540	4,570	3
4	4,880	4,960	5,020	5,090	5,160	5,230	5,300	5,360	5,430	5,490	5,550	5,620	5,680	5,740	5,800	5,860	5,920	5,970	6,030	6,090	6,140	4
5	6,400	6,470	6,530	6,600	6,670	6,730	6,800	6,870	6,930	7,000	7,070	7,140	7,200	7,270	7,340	7,400	7,470	7,540	7,600	7,670	7,740	5
6	7,920	7,990	8,050	8,120	8,180	8,250	8,320	8,380	8,450	8,510	8,580	8,650	8,710	8,780	8,850	8,910	8,980	9,050	9,110	9,180	9,250	6
7	9,410	9,490	9,570	9,650	9,730	9,810	9,890	9,970	10,050	10,130	10,210	10,290	10,370	10,450	10,530	10,610	10,690	10,770	10,850	10,930	11,010	7
8	10,860	10,960	11,050	11,140	11,240	11,330	11,420	11,520	11,610	11,710	11,800	11,900	11,990	12,090	12,180	12,280	12,370	12,470	12,560	12,650	12,750	8
9	12,480	12,590	12,690	12,800	12,910	13,010	13,120	13,230	13,330	13,440	13,550	13,650	13,760	13,870	13,970	14,080	14,190	14,290	14,400	14,510	14,610	9
10	14,120	14,230	14,350	14,470	14,580	14,700	14,820	14,940	15,050	15,170	15,290	15,410	15,530	15,650	15,770	15,880	16,000	16,120	16,240	16,360	16,480	10
11	15,750	15,880	16,010	16,140	16,270	16,400	16,530	16,660	16,790	16,920	17,050	17,180	17,320	17,450	17,580	17,710	17,840	17,970	18,100	18,230	18,360	11
12	17,610	17,750	17,890	18,030	18,170	18,320	18,460	18,600	18,750	18,890	19,030	19,180	19,320	19,470	19,610	19,750	19,900	20,040	20,180	20,330	20,470	12
13	19,500	19,660	19,810	19,960	20,120	20,270	20,430	20,590	20,740	20,900	21,050	21,210	21,370	21,520	21,680	21,840	21,990	22,150	22,300	22,460	22,610	13
14	21,420	21,580	21,750	21,920	22,090	22,260	22,430	22,600	22,770	22,940	23,110	23,280	23,450	23,620	23,790	23,960	24,130	24,300	24,470	24,640	24,810	14
15	23,400	23,580	23,760	23,940	24,120	24,300	24,480	24,660	24,840	25,030	25,210	25,390	25,570	25,750	25,940	26,120	26,300	26,480	26,660	26,840	27,030	15
16	25,350	25,550	25,740	25,930	26,130	26,320	26,520	26,710	26,910	27,110	27,300	27,500	27,690	27,890	28,080	28,280	28,470	28,670	28,860	29,060	29,250	16
17	30,910	31,100	31,290	31,480	31,670	31,860	32,050	32,240	32,440	32,630	32,820	33,010	33,200	33,390	33,590	33,780	33,970	34,160	34,350	34,540	34,730	17
18	36,460	36,650	36,830	37,020	37,210	37,400	37,590	37,770	37,960	38,150	38,340	38,520	38,710	38,900	39,090	39,270	39,460	39,650	39,840	40,020	40,210	18
19	42,010	42,200	42,380	42,570	42,750	42,940	43,120	43,300	43,490	43,670	43,850	44,040	44,220	44,410	44,590	44,770	44,960	45,140	45,320	45,510	45,690	19
20	44,710	45,010	45,310	45,600	45,900	46,190	46,490	46,780	47,070	47,360	47,650	47,930	48,220	48,500	48,790	49,070	49,350	49,640	49,920	50,200	50,480	20
21	47,400	47,820	48,230	48,640	49,050	49,450	49,850	50,250	50,650	51,040	51,440	51,830	52,210	52,600	52,990	53,370	53,750	54,130	54,510	54,890	55,260	21
22	50,100	50,630	51,150	51,680	52,190	52,710	53,220	53,720	54,230	54,730	55,230	55,720	56,210	56,700	57,180	57,670	58,150	58,630	59,100	59,580	60,050	22
23	50,100	50,630	51,150	51,680	52,190	52,710	53,220	53,720	54,230	54,730	55,230	55,720	56,210	56,700	57,180	57,670	58,150	58,630	59,100	59,580	60,050	23
24	50,100	50,630	51,150	51,680	52,190	52,710	53,220	53,720	54,230	54,730	55,230	55,720	56,210	56,700	57,180	57,670	58,150	58,630	59,100	59,580	60,050	24
25	50,100	50,630	51,150	51,680	52,190	52,710	53,220	53,720	54,230	54,730	55,230	55,720	56,210	56,700	57,180	57,670	58,150	58,630	59,100	59,580	60,050	25
26	50,100	50,630	51,150	51,680	52,190	52,710	53,220	53,720	54,230	54,730	55,230	55,720	56,210	56,700	57,180	57,670	58,150	58,630	59,100	59,580	60,050	26
27	50,100	50,630	51,150	51,680	52,190	52,710	53,220	53,720	54,230	54,730	55,230	55,720	56,210	56,700	57,180	57,670	58,150	58,630	59,100	59,580	60,050	27
28	50,100	50,630	51,150	51,680	52,190	52,710	53,220	53,720	54,230	54,730	55,230	55,720	56,210	56,700	57,180	57,670	58,150	58,630	59,100	59,580	60,050	28

GATE ARRANGEMENT	HEADWATER ELEVATION																				GATE ARRANGEMENT
	802.0	802.1	802.2	802.3	802.4	802.5	802.6	802.7	802.8	802.9	803.0	803.1	803.2	803.3	803.4	803.5	803.6	803.7	803.8	803.9	804.0	
1	1,380	1,390	1,400	1,410	1,420	1,430	1,440	1,450	1,460	1,470	1,480	1,480	1,490	1,500	1,510	1,520	1,530	1,540	1,550	1,560	1,560	1
2	2,970	2,990	3,010	3,030	3,050	3,070	3,090	3,110	3,130	3,150	3,170	3,190	3,210	3,230	3,250	3,270	3,290	3,310	3,330	3,350	3,360	2
3	4,570	4,600	4,640	4,670	4,700	4,730	4,760	4,790	4,820	4,860	4,890	4,920	4,950	4,980	5,010	5,040	5,070	5,100	5,120	5,150	5,180	3
4	6,140	6,200	6,250	6,310	6,360	6,410	6,460	6,520	6,570	6,620	6,670	6,710	6,760	6,810	6,860	6,900	6,950	7,000	7,040	7,080	7,130	4
5	7,740	7,800	7,870	7,930	8,000	8,070	8,130	8,190	8,260	8,320	8,380	8,450	8,510	8,570	8,630	8,690	8,750	8,810	8,870	8,930	8,990	5
6	9,250	9,310	9,380	9,450	9,510	9,580	9,650	9,710	9,780	9,850	9,910	9,980	10,040	10,110	10,180	10,240	10,310	10,370	10,440	10,500	10,570	6
7	11,010	11,090	11,180	11,260	11,340	11,420	11,500	11,580	11,660	11,730	11,810	11,890	11,970	12,050	12,130	12,210	12,290	12,360	12,440	12,520	12,600	7
8	12,750	12,840	12,940	13,030	13,130	13,220	13,310	13,410	13,500	13,590	13,690	13,780	13,870	13,960	14,050	14,140	14,230	14,330	14,410	14,500	14,590	8
9	14,610	14,720	14,830	14,930	15,040	15,150	15,250	15,360	15,460	15,570	15,670	15,780	15,880	15,980	16,090	16,190	16,290	16,390	16,490	16,590	16,690	9
10	16,480	16,600	16,710	16,830	16,950	17,070	17,190	17,300	17,420	17,540	17,650	17,770	17,890	18,000	18,120	18,230	18,350	18,460	18,570	18,690	18,800	10
11	18,360	18,490	18,620	18,750	18,880	19,010	19,140	19,270	19,400	19,530	19,650	19,780	19,910	20,030	20,160	20,280	20,410	20,530	20,650	20,770	20,890	11
12	20,470	20,610	20,760	20,900	21,040	21,180	21,320	21,460	21,600	21,740	21,880	22,020	22,160	22,300	22,440	22,570	22,710	22,840	22,980	23,110	23,240	12
13	22,610	22,770	22,920	23,080	23,230	23,390	23,540	23,690	23,850	24,000	24,150	24,300	24,450	24,600	24,750	24,890	25,040	25,190	25,330	25,480	25,620	13
14	24,810	24,980	25,150	25,310	25,480	25,650	25,810	25,980	26,140	26,310	26,470	26,640	26,800	26,960	27,120	27,280	27,440	27,600	27,750	27,910	28,060	14
15	27,030	27,210	27,390	27,570	27,750	27,920	28,100	28,280	28,460	28,630	28,810	28,980	29,150	29,330	29,500	29,670	29,840	30,010	30,180	30,340	30,510	15
16	29,250	29,450	29,640	29,830	30,020	30,220	30,410	30,600	30,780	30,970	31,160	31,350	31,530	31,720	31,900	32,080	32,260	32,440	32,620	32,800	32,970	16
17	34,730	34,920	35,110	35,300	35,490	35,680	35,870	36,050	36,240	36,430	36,610	36,800	36,980	37,170	37,350	37,530	37,720	37,900	38,080	38,260	38,430	17
18	40,210	40,400	40,580	40,770	40,960	41,140	41,330	41,510	41,700	41,880	42,070	42,250	42,440	42,620	42,800	42,990	43,170	43,350	43,540	43,720	43,900	18
19	45,690	45,870	46,060	46,240	46,420	46,610	46,790	46,970	47,160	47,340	47,520	47,710	47,890	48,070	48,260	48,440	48,630	48,810	48,990	49,180	49,360	19
20	50,480	50,750	51,030	51,310	51,590	51,860	52,140	52,410	52,690	52,960	53,240	53,510	53,780	54,060	54,330	54,600	54,870	55,060	55,240	55,420	55,600	20
21	55,260	55,640	56,010	56,380	56,750	57,120	57,490	57,860	58,220	58,590	58,950	59,310	59,680	60,040	60,400	60,760	61,120	61,310	61,480	61,660	61,830	21
22	60,050	60,520	60,980	61,450	61,910	62,380	62,840	63,300	63,750	64,210	64,660	65,120	65,570	66,020	66,470	66,920	67,370	67,550	67,730	67,900	68,060	22
23	60,050	60,520	60,980	61,450	61,910	62,380	62,840	63,300	63,750	64,210	64,660	65,120	65,570	66,020	66,470	66,920	67,370	67,640	67,900	68,170	68,430	23
24	60,050	60,520	60,980	61,450	61,910	62,380	62,840	63,300	63,750	64,210	64,660	65,120	65,570	66,020	66,470	66,920	67,370	67,730	68,080	68,440	68,790	24
25	60,050	60,520	60,980	61,450	61,910	62,380	62,840	63,300	63,750	64,210	64,660	65,120	65,570	66,020	66,470	66,920	67,370	67,810	68,260	68,700	69,150	25
26	60,050	60,520	60,980	61,450	61,910	62,380	62,840	63,300	63,750	64,210	64,660	65,120	65,570	66,020	66,470	66,920	67,370	67,810	68,260	68,700	69,150	26
27	60,050	60,520	60,980	61,450	61,910	62,380	62,840	63,300	63,750	64,210	64,660	65,120	65,570	66,020	66,470	66,920	67,370	67,810	68,260	68,700	69,150	27
28	60,050	60,520	60,980	61,450	61,910	62,380	62,840	63,300	63,750	64,210	64,660	65,120	65,570	66,020	66,470	66,920	67,370	67,810	68,260	68,700	69,150	28

MAY 2008

HEADWATER 800 to 804
TAILWATER 794.51 to 795.5

TELLICO DAM
SPILLWAY DISCHARGE
IN CUBIC FEET PER SECOND

GATE ARRANGEMENT	HEADWATER ELEVATION																				GATE ARRANGEMENT
	804.0	804.1	804.2	804.3	804.4	804.5	804.6	804.7	804.8	804.9	805.0	805.1	805.2	805.3	805.4	805.5	805.6	805.7	805.8	805.9	806.0	
1	1,560	1,570	1,580	1,590	1,600	1,610	1,620	1,620	1,630	1,640	1,650	1,660	1,670	1,670	1,680	1,690	1,700	1,710	1,710	1,720	1,730	1
2	3,360	3,380	3,400	3,420	3,440	3,460	3,480	3,490	3,510	3,530	3,550	3,560	3,580	3,600	3,620	3,630	3,650	3,670	3,690	3,700	3,720	2
3	5,180	5,210	5,240	5,270	5,300	5,320	5,350	5,380	5,410	5,440	5,460	5,490	5,520	5,540	5,570	5,600	5,620	5,650	5,680	5,700	5,730	3
4	7,130	7,170	7,220	7,260	7,300	7,340	7,380	7,420	7,460	7,500	7,540	7,580	7,620	7,660	7,700	7,730	7,770	7,810	7,840	7,880	7,920	4
5	8,990	9,050	9,100	9,160	9,210	9,270	9,320	9,380	9,430	9,480	9,530	9,590	9,640	9,690	9,740	9,790	9,830	9,880	9,930	9,980	10,020	5
6	10,570	10,630	10,700	10,760	10,820	10,890	10,950	11,010	11,080	11,140	11,200	11,260	11,330	11,390	11,450	11,510	11,570	11,630	11,690	11,750	11,810	6
7	12,600	12,670	12,750	12,820	12,900	12,970	13,050	13,120	13,200	13,270	13,340	13,420	13,490	13,560	13,630	13,700	13,780	13,850	13,920	13,990	14,060	7
8	14,590	14,680	14,770	14,860	14,940	15,030	15,110	15,200	15,280	15,370	15,450	15,540	15,620	15,700	15,780	15,860	15,940	16,020	16,100	16,180	16,260	8
9	16,690	16,790	16,890	16,990	17,090	17,180	17,280	17,380	17,470	17,570	17,660	17,750	17,850	17,940	18,030	18,120	18,210	18,300	18,390	18,480	18,570	9
10	18,800	18,910	19,020	19,130	19,240	19,350	19,460	19,570	19,680	19,780	19,890	20,000	20,100	20,210	20,310	20,420	20,520	20,620	20,720	20,830	20,930	10
11	20,890	21,010	21,130	21,250	21,370	21,490	21,600	21,720	21,840	21,950	22,060	22,180	22,290	22,400	22,510	22,620	22,730	22,840	22,950	23,060	23,160	11
12	23,240	23,370	23,500	23,630	23,760	23,890	24,020	24,140	24,270	24,390	24,520	24,640	24,760	24,880	25,000	25,120	25,240	25,360	25,480	25,600	25,710	12
13	25,620	25,760	25,900	26,040	26,180	26,320	26,460	26,590	26,730	26,860	27,000	27,130	27,260	27,390	27,530	27,650	27,780	27,910	28,040	28,170	28,290	13
14	28,060	28,210	28,370	28,520	28,670	28,810	28,960	29,110	29,250	29,400	29,540	29,680	29,820	29,960	30,100	30,240	30,380	30,510	30,650	30,780	30,920	14
15	30,510	30,670	30,830	30,990	31,150	31,310	31,470	31,630	31,780	31,930	32,090	32,240	32,390	32,540	32,690	32,840	32,980	33,130	33,280	33,420	33,560	15
16	32,970	33,140	33,320	33,490	33,660	33,830	33,990	34,160	34,320	34,480	34,650	34,810	34,960	35,120	35,280	35,440	35,590	35,740	35,900	36,050	36,200	16
17	38,430	38,610	38,790	38,960	39,140	39,310	39,480	39,660	39,830	40,000	40,170	40,340	40,500	40,670	40,840	41,000	41,170	41,330	41,500	41,660	41,830	17
18	43,900	44,080	44,260	44,440	44,620	44,800	44,980	45,160	45,330	45,510	45,690	45,870	46,040	46,220	46,400	46,570	46,750	46,920	47,100	47,270	47,450	18
19	49,360	49,550	49,730	49,920	50,100	50,290	50,470	50,660	50,840	51,030	51,210	51,400	51,580	51,770	51,960	52,140	52,330	52,510	52,700	52,890	53,070	19
20	55,600	55,770	55,950	56,130	56,310	56,490	56,660	56,840	57,020	57,190	57,370	57,540	57,720	57,890	58,070	58,240	58,410	58,590	58,760	58,930	59,100	20
21	61,830	62,000	62,180	62,350	62,520	62,690	62,860	63,030	63,190	63,360	63,520	63,690	63,850	64,020	64,180	64,340	64,500	64,660	64,820	64,970	65,130	21
22	68,060	68,230	68,400	68,560	68,730	68,890	69,050	69,210	69,370	69,530	69,680	69,830	69,990	70,140	70,290	70,440	70,580	70,730	70,870	71,020	71,160	22
23	68,430	68,690	68,940	69,200	69,460	69,710	69,970	70,220	70,470	70,720	70,970	71,220	71,470	71,710	71,960	72,200	72,440	72,690	72,930	73,170	73,410	23
24	68,790	69,140	69,490	69,840	70,190	70,530	70,880	71,230	71,570	71,920	72,260	72,600	72,940	73,290	73,630	73,970	74,300	74,640	74,980	75,320	75,650	24
25	69,150	69,590	70,030	70,480	70,920	71,360	71,800	72,240	72,670	73,110	73,550	73,990	74,420	74,860	75,290	75,730	76,170	76,600	77,030	77,470	77,900	25
26	69,150	69,590	70,030	70,480	70,920	71,360	71,800	72,240	72,670	73,110	73,550	73,990	74,420	74,860	75,290	75,730	76,170	76,600	77,030	77,470	77,900	26
27	69,150	69,590	70,030	70,480	70,920	71,360	71,800	72,240	72,670	73,110	73,550	73,990	74,420	74,860	75,290	75,730	76,170	76,600	77,030	77,470	77,900	27
28	69,150	69,590	70,030	70,480	70,920	71,360	71,800	72,240	72,670	73,110	73,550	73,990	74,420	74,860	75,290	75,730	76,170	76,600	77,030	77,470	77,900	28

GATE ARRANGEMENT	HEADWATER ELEVATION																				GATE ARRANGEMENT
	806.0	806.1	806.2	806.3	806.4	806.5	806.6	806.7	806.8	806.9	807.0	807.1	807.2	807.3	807.4	807.5	807.6	807.7	807.8	807.9	808.0	
1	1,730	1,740	1,750	1,750	1,760	1,770	1,780	1,780	1,790	1,800	1,810	1,810	1,820	1,830	1,840	1,840	1,850	1,860	1,870	1,870	1,880	1
2	3,720	3,740	3,750	3,770	3,790	3,800	3,820	3,840	3,850	3,870	3,890	3,900	3,920	3,930	3,950	3,970	3,980	4,000	4,010	4,030	4,040	2
3	5,730	5,760	5,780	5,810	5,830	5,860	5,880	5,910	5,930	5,960	5,980	6,010	6,030	6,060	6,080	6,110	6,130	6,160	6,180	6,200	6,230	3
4	7,920	7,950	7,990	8,020	8,060	8,090	8,120	8,160	8,190	8,230	8,260	8,290	8,320	8,360	8,390	8,420	8,450	8,480	8,510	8,550	8,580	4
5	10,020	10,070	10,120	10,160	10,210	10,250	10,300	10,340	10,380	10,430	10,470	10,510	10,560	10,600	10,640	10,680	10,720	10,770	10,810	10,850	10,890	5
6	11,810	11,870	11,930	11,990	12,040	12,100	12,160	12,220	12,270	12,330	12,390	12,440	12,500	12,550	12,610	12,660	12,720	12,770	12,820	12,870	12,930	6
7	14,060	14,130	14,190	14,260	14,330	14,400	14,460	14,530	14,600	14,660	14,730	14,790	14,860	14,920	14,990	15,050	15,110	15,170	15,240	15,300	15,360	7
8	16,260	16,340	16,420	16,500	16,570	16,650	16,730	16,800	16,880	16,950	17,020	17,100	17,170	17,240	17,320	17,390	17,460	17,530	17,600	17,670	17,740	8
9	18,570	18,660	18,750	18,840	18,920	19,010	19,090	19,180	19,260	19,350	19,430	19,520	19,600	19,680	19,760	19,850	19,930	20,010	20,090	20,170	20,250	9
10	20,930	21,030	21,130	21,230	21,320	21,420	21,520	21,620	21,710	21,810	21,900	22,000	22,090	22,180	22,280	22,370	22,460	22,550	22,640	22,730	22,820	10
11	23,160	23,270	23,380	23,480	23,590	23,690	23,800	23,900	24,000	24,110	24,210	24,310	24,410	24,510	24,610	24,710	24,810	24,910	25,010	25,110	25,210	11
12	25,710	25,830	25,950	26,060	26,170	26,290	26,400	26,510	26,630	26,740	26,850	26,960	27,070	27,180	27,290	27,400	27,510	27,620	27,730	27,830	27,940	12
13	28,290	28,420	28,540	28,670	28,790	28,910	29,030	29,160	29,280	29,400	29,520	29,640	29,760	29,880	30,000	30,110	30,230	30,350	30,470	30,580	30,700	13
14	30,920	31,050	31,180	31,310	31,450	31,580	31,710	31,840	31,970	32,090	32,220	32,350	32,480	32,600	32,730	32,850	32,980	33,110	33,230	33,360	33,480	14
15	33,560	33,710	33,850	33,990	34,130	34,270	34,410	34,550	34,690	34,820	34,960	35,100	35,230	35,370	35,500	35,640	35,770	35,910	36,040	36,170	36,310	15
16	36,200	36,350	36,500	36,650	36,800	36,940	37,090	37,240	37,380	37,530	37,670	37,820	37,960	38,100	38,240	38,390	38,530	38,670	38,810	38,960	39,100	16
17	41,830	41,990	42,150	42,310	42,470	42,630	42,790	42,950	43,110	43,270	43,430	43,590	43,750	43,910	44,070	44,220	44,380	44,540	44,700	44,860	45,010	17
18	47,450	47,620	47,800	47,970	48,150	48,320	48,500	48,670	48,840	49,020	49,190	49,370	49,540	49,710	49,890	50,060	50,230	50,410	50,580	50,760	50,930	18
19	53,070	53,260	53,450	53,640	53,820	54,010	54,200	54,390	54,580	54,760	54,950	55,140	55,330	55,520	55,710	55,900	56,090	56,280	56,470	56,660	56,850	19
20	59,100	59,270	59,440	59,620	59,790	59,960	60,130	60,300	60,470	60,640	60,810	60,980	61,150	61,320	61,490	61,660	61,830	62,010	62,180	62,350	62,530	20
21	65,130	65,290	65,440	65,590	65,750	65,900	66,050	66,200	66,360	66,510	66,660	66,810	66,960	67,120	67,270	67,430	67,580	67,740	67,890	68,050	68,210	21
22	71,160	71,300	71,440	71,570	71,710	71,840	71,980	72,110	72,250	72,380	72,510	72,650	72,780	72,920	73,050	73,190	73,330	73,470	73,610	73,750	73,900	22
23	73,410	73,640	73,880	74,120	74,350	74,590	74,820	75,050	75,290	75,520	75,750	75,990	76,220	76,450	76,690	76,920	77,160	77,400	77,640	77,880	78,120	23
24	75,650	75,990	76,320	76,660	76,990	77,330	77,660	77,990	78,330	78,660	78,990	79,330	79,660	79,990	80,330	80,660	80,990	81,330	81,660	82,000	82,340	24
25	77,900	78,340	78,770	79,200	79,640	80,070	80,500	80,930	81,370	81,800	82,230	82,660	83,100	83,530	83,960	84,390	84,830	85,260	85,690	86,120	86,560	25
26	77,900	78,340	78,770	79,200	79,640	80,070	80,500	80,930	81,370	81,800	82,230	82,660	83,100	83,530	83,960	84,390	84,830	85,260	85,690	86,120	86,560	26
27	77,900	78,340	78,770	79,200	79,640	80,070	80,500	80,930	81,370	81,800	82,230	82,660	83,100	83,530	83,960	84,390	84,830	85,260	85,690	86,120	86,560	27
28	77,900	78,340	78,770	79,200	79,640	80,070	80,500	80,930	81,370	81,800	82,230	82,660	83,100	83,530	83,960	84,390	84,830	85,260	85,690	86,120	86,560	28

HEADWATER 804 to 808
TAILWATER 794.51 to 795.5

MAY 2008

TELLICO DAM
SPILLWAY DISCHARGE
IN CUBIC FEET PER SECOND

HEADWATER ELEVATION

GATE ARRANGEMENT	808.0	808.1	808.2	808.3	808.4	808.5	808.6	808.7	808.8	808.9	809.0	809.1	809.2	809.3	809.4	809.5	809.6	809.7	809.8	809.9	810.0	GATE ARRANGEMENT
1	1,880	1,890	1,890	1,900	1,910	1,920	1,920	1,930	1,940	1,940	1,950	1,960	1,970	1,970	1,980	1,990	1,990	2,000	2,010	2,010	2,020	1
2	4,040	4,060	4,080	4,090	4,110	4,120	4,140	4,150	4,170	4,180	4,200	4,210	4,230	4,240	4,260	4,270	4,290	4,300	4,310	4,330	4,340	2
3	6,230	6,250	6,280	6,300	6,320	6,350	6,370	6,390	6,420	6,440	6,460	6,490	6,510	6,530	6,560	6,580	6,600	6,620	6,650	6,670	6,690	3
4	8,580	8,610	8,640	8,670	8,700	8,730	8,760	8,790	8,820	8,850	8,880	8,910	8,940	8,960	8,990	9,020	9,050	9,080	9,110	9,140	9,170	4
5	10,890	10,930	10,970	11,010	11,050	11,090	11,130	11,170	11,210	11,250	11,290	11,330	11,370	11,410	11,450	11,480	11,520	11,560	11,600	11,640	11,680	5
6	12,930	12,980	13,030	13,080	13,130	13,180	13,230	13,280	13,330	13,380	13,430	13,480	13,520	13,570	13,620	13,660	13,710	13,760	13,800	13,850	13,900	6
7	15,360	15,420	15,480	15,540	15,600	15,660	15,720	15,780	15,830	15,890	15,950	16,010	16,060	16,120	16,170	16,230	16,280	16,340	16,390	16,450	16,500	7
8	17,740	17,810	17,880	17,950	18,020	18,080	18,150	18,220	18,280	18,350	18,410	18,480	18,550	18,610	18,670	18,740	18,800	18,870	18,930	18,990	19,050	8
9	20,250	20,330	20,400	20,480	20,560	20,640	20,710	20,790	20,870	20,940	21,020	21,090	21,170	21,240	21,320	21,390	21,460	21,540	21,610	21,680	21,750	9
10	22,820	22,910	23,000	23,080	23,170	23,260	23,340	23,430	23,510	23,600	23,680	23,760	23,850	23,930	24,010	24,090	24,170	24,250	24,330	24,410	24,490	10
11	25,210	25,310	25,410	25,500	25,600	25,700	25,800	25,890	25,990	26,080	26,180	26,270	26,370	26,460	26,560	26,650	26,740	26,840	26,930	27,020	27,110	11
12	27,940	28,050	28,160	28,260	28,370	28,480	28,580	28,690	28,790	28,900	29,000	29,110	29,210	29,320	29,420	29,520	29,620	29,730	29,830	29,930	30,030	12
13	30,700	30,820	30,930	31,050	31,160	31,280	31,390	31,510	31,620	31,740	31,850	31,960	32,080	32,190	32,300	32,420	32,530	32,640	32,750	32,860	32,970	13
14	33,480	33,610	33,730	33,850	33,980	34,100	34,230	34,350	34,470	34,600	34,720	34,840	34,960	35,080	35,210	35,330	35,450	35,570	35,690	35,810	35,930	14
15	36,310	36,440	36,570	36,710	36,840	36,970	37,100	37,240	37,370	37,500	37,630	37,760	37,890	38,020	38,150	38,280	38,410	38,540	38,670	38,800	38,930	15
16	39,100	39,240	39,380	39,520	39,660	39,800	39,950	40,090	40,230	40,370	40,510	40,650	40,790	40,930	41,070	41,210	41,350	41,490	41,630	41,770	41,910	16
17	45,010	45,170	45,330	45,490	45,640	45,800	45,960	46,120	46,280	46,430	46,590	46,750	46,900	47,060	47,220	47,370	47,530	47,690	47,840	48,000	48,150	17
18	50,930	51,100	51,280	51,450	51,630	51,800	51,970	52,150	52,320	52,500	52,670	52,840	53,020	53,190	53,360	53,540	53,710	53,880	54,050	54,230	54,400	18
19	56,850	57,040	57,230	57,420	57,610	57,800	57,990	58,180	58,370	58,560	58,750	58,940	59,130	59,320	59,510	59,700	59,890	60,080	60,270	60,450	60,640	19
20	62,530	62,710	62,880	63,060	63,240	63,420	63,600	63,780	63,960	64,140	64,320	64,500	64,680	64,870	65,050	65,230	65,420	65,600	65,780	65,970	66,150	20
21	68,210	68,370	68,540	68,700	68,870	69,030	69,200	69,370	69,540	69,710	69,890	70,060	70,240	70,410	70,590	70,760	70,940	71,120	71,300	71,480	71,660	21
22	73,900	74,040	74,190	74,340	74,500	74,650	74,810	74,970	75,130	75,290	75,450	75,620	75,790	75,960	76,130	76,300	76,470	76,640	76,820	76,990	77,170	22
23	78,120	78,360	78,600	78,850	79,090	79,340	79,590	79,840	80,090	80,350	80,600	80,850	81,110	81,370	81,630	81,880	82,140	82,410	82,670	82,930	83,190	23
24	82,340	82,670	83,010	83,350	83,690	84,030	84,370	84,710	85,060	85,400	85,740	86,090	86,430	86,780	87,130	87,470	87,820	88,170	88,520	88,870	89,210	24
25	86,560	86,990	87,420	87,860	88,290	88,720	89,160	89,590	90,020	90,460	90,890	91,320	91,760	92,190	92,630	93,060	93,500	93,930	94,370	94,800	95,240	25
26	86,560	86,990	87,420	87,860	88,290	88,720	89,160	89,590	90,020	90,460	90,890	91,320	91,760	92,190	92,630	93,060	93,500	93,930	94,370	94,800	95,240	26
27	86,560	86,990	87,420	87,860	88,290	88,720	89,160	89,590	90,020	90,460	90,890	91,320	91,760	92,190	92,630	93,060	93,500	93,930	94,370	94,800	95,240	27
28	86,560	86,990	87,420	87,860	88,290	88,720	89,160	89,590	90,020	90,460	90,890	91,320	91,760	92,190	92,630	93,060	93,500	93,930	94,370	94,800	95,240	28

HEADWATER ELEVATION

GATE ARRANGEMENT	810.0	810.1	810.2	810.3	810.4	810.5	810.6	810.7	810.8	810.9	811.0	811.1	811.2	811.3	811.4	811.5	811.6	811.7	811.8	811.9	812.0	GATE ARRANGEMENT
1	2,020	2,030	2,030	2,040	2,050	2,050	2,060	2,070	2,070	2,080	2,090	2,090	2,100	2,110	2,110	2,120	2,120	2,130	2,140	2,140	2,150	1
2	4,340	4,360	4,370	4,390	4,400	4,420	4,430	4,440	4,460	4,470	4,490	4,500	4,510	4,530	4,540	4,560	4,570	4,580	4,600	4,610	4,620	2
3	6,690	6,710	6,740	6,760	6,780	6,800	6,820	6,850	6,870	6,890	6,910	6,930	6,950	6,970	7,000	7,020	7,040	7,060	7,080	7,100	7,120	3
4	9,170	9,190	9,220	9,250	9,280	9,310	9,340	9,370	9,390	9,420	9,450	9,480	9,510	9,530	9,560	9,590	9,620	9,650	9,680	9,700	9,730	4
5	11,680	11,720	11,750	11,790	11,830	11,870	11,910	11,940	11,980	12,020	12,060	12,090	12,130	12,170	12,200	12,240	12,280	12,320	12,350	12,390	12,430	5
6	13,900	13,940	13,990	14,030	14,080	14,120	14,170	14,210	14,260	14,300	14,350	14,390	14,430	14,480	14,520	14,570	14,610	14,650	14,700	14,740	14,790	6
7	16,500	16,560	16,610	16,660	16,720	16,770	16,820	16,880	16,930	16,980	17,040	17,090	17,140	17,190	17,240	17,300	17,350	17,400	17,450	17,500	17,560	7
8	19,050	19,120	19,180	19,240	19,300	19,360	19,420	19,480	19,550	19,610	19,670	19,730	19,790	19,850	19,910	19,970	20,020	20,080	20,140	20,200	20,260	8
9	21,750	21,820	21,900	21,970	22,040	22,110	22,180	22,250	22,320	22,390	22,460	22,520	22,590	22,660	22,730	22,800	22,870	22,930	23,000	23,070	23,130	9
10	24,490	24,570	24,640	24,720	24,800	24,880	24,950	25,030	25,100	25,180	25,250	25,330	25,400	25,480	25,550	25,620	25,700	25,770	25,840	25,910	25,990	10
11	27,110	27,200	27,290	27,380	27,470	27,560	27,650	27,740	27,830	27,920	28,000	28,090	28,170	28,260	28,340	28,430	28,510	28,590	28,670	28,760	28,840	11
12	30,030	30,130	30,230	30,330	30,430	30,530	30,620	30,720	30,820	30,920	31,010	31,110	31,200	31,300	31,390	31,480	31,570	31,670	31,760	31,850	31,940	12
13	32,970	33,080	33,190	33,300	33,410	33,510	33,620	33,730	33,830	33,940	34,040	34,150	34,250	34,360	34,460	34,560	34,670	34,770	34,870	34,970	35,070	13
14	35,930	36,050	36,170	36,290	36,400	36,520	36,640	36,750	36,870	36,990	37,100	37,220	37,330	37,440	37,560	37,670	37,780	37,890	38,000	38,110	38,220	14
15	38,930	39,050	39,180	39,310	39,440	39,560	39,690	39,810	39,940	40,060	40,190	40,310	40,430	40,560	40,680	40,800	40,920	41,040	41,160	41,280	41,400	15
16	41,910	42,050	42,180	42,320	42,460	42,600	42,730	42,870	43,000	43,140	43,270	43,410	43,540	43,680	43,810	43,940	44,070	44,210	44,340	44,470	44,600	16
17	48,150	48,310	48,460	48,610	48,770	48,920	49,070	49,220	49,380	49,530	49,680	49,830	49,970	50,120	50,270	50,420	50,560	50,710	50,850	51,000	51,140	17
18	54,400	54,570	54,740	54,910	55,080	55,240	55,410	55,580	55,750	55,910	56,080	56,240	56,410	56,570	56,730	56,890	57,050	57,210	57,370	57,530	57,690	18
19	60,640	60,830	61,010	61,200	61,380	61,570	61,750	61,940	62,120	62,300	62,480	62,660	62,840	63,020	63,190	63,370	63,540	63,720	63,890	64,060	64,230	19
20	66,150	66,330	66,520	66,700	66,880	67,070	67,250	67,430	67,610	67,790	67,970	68,150	68,330	68,510	68,690	68,870	69,040	69,220	69,390	69,560	69,740	20
21	71,660	71,840	72,020	72,200	72,380	72,560	72,740	72,920	73,110	73,290	73,470	73,650	73,830	74,010	74,190	74,360	74,540	74,720	74,890	75,070	75,240	21
22	77,170	77,350	77,520	77,700	77,880	78,060	78,240	78,420	78,600	78,780	78,960	79,140	79,320	79,500	79,680	79,860	80,040	80,220	80,400	80,570	80,750	22
23	83,190	83,450	83,720	83,980	84,250	84,510	84,780	85,020	85,180	85,340	85,490	85,650	85,800	85,960	86,110	86,260	86,420	86,570	86,720	86,870	87,020	23
24	89,210	89,560	89,910	90,270	90,620	90,970	91,320	91,630	91,760	91,890	92,020	92,150	92,280	92,410	92,540	92,670	92,790	92,920	93,040	93,170	93,290	24
25	95,240	95,670	96,110	96,550	96,980	97,420	97,860	98,230	98,340	98,450	98,560	98,660	98,770	98,870	98,970	99,070	99,170	99,270	99,360	99,460	99,550	25
26	95,240	95,670	96,110	96,550	96,980	97,420	97,860	98,250	98,470	98,690	98,910	99,120	99,340	99,550	99,770	99,980	100,200	100,400	100,600	100,800	101,000	26
27	95,240	95,670	96,110	96,550	96,980	97,420	97,860	98,270	98,600	98,930	99,260	99,590	99,910	100,200	100,600	100,900	101,200	101,500	101,900	102,200	102,500	27
28	95,240	95,670	96,110	96,550	96,980	97,420	97,860	98,300	98,730	99,170	99,610	100,000	100,500	100,900	101,400	101,800	102,200	102,700	103,100	103,600	104,000	28

MAY 2008

HEADWATER 808 to 812
TAILWATER 794.51 to 795.5

TELLICO DAM
SPILLWAY DISCHARGE
IN CUBIC FEET PER SECOND

HEADWATER ELEVATION

GATE ARRANGEMENT	812.0	812.1	812.2	812.3	812.4	812.5	812.6	812.7	812.8	812.9	813.0	813.1	813.2	813.3	813.4	813.5	813.6	813.7	813.8	813.9	814.0	GATE ARRANGEMENT
1	2,150	2,160	2,160	2,170	2,180	2,180	2,190	2,190	2,200	2,210	2,210	2,220	2,220	2,230	2,240	2,240	2,250	2,260	2,260	2,270	2,270	1
2	4,620	4,640	4,650	4,670	4,680	4,690	4,710	4,720	4,730	4,750	4,760	4,770	4,780	4,800	4,810	4,820	4,840	4,850	4,860	4,880	4,890	2
3	7,120	7,140	7,160	7,190	7,210	7,230	7,250	7,270	7,290	7,310	7,330	7,350	7,370	7,390	7,410	7,430	7,450	7,470	7,490	7,510	7,530	3
4	9,730	9,760	9,790	9,820	9,840	9,870	9,900	9,930	9,960	9,990	10,010	10,040	10,070	10,100	10,130	10,160	10,180	10,210	10,240	10,270	10,300	4
5	12,430	12,460	12,500	12,540	12,580	12,610	12,650	12,690	12,720	12,760	12,800	12,830	12,870	12,910	12,940	12,980	13,020	13,050	13,090	13,130	13,160	5
6	14,790	14,830	14,880	14,920	14,960	15,010	15,050	15,100	15,140	15,190	15,230	15,280	15,320	15,360	15,410	15,450	15,500	15,540	15,590	15,630	15,680	6
7	17,560	17,610	17,660	17,710	17,760	17,820	17,870	17,920	17,970	18,020	18,070	18,130	18,180	18,230	18,280	18,330	18,390	18,440	18,490	18,540	18,590	7
8	20,260	20,320	20,380	20,440	20,500	20,560	20,610	20,670	20,730	20,790	20,850	20,910	20,960	21,020	21,080	21,140	21,200	21,250	21,310	21,370	21,430	8
9	23,130	23,200	23,270	23,330	23,400	23,470	23,530	23,600	23,660	23,730	23,790	23,860	23,920	23,990	24,050	24,110	24,180	24,240	24,310	24,370	24,430	9
10	25,990	26,060	26,130	26,200	26,270	26,340	26,410	26,490	26,560	26,630	26,700	26,770	26,840	26,900	26,970	27,040	27,110	27,180	27,250	27,320	27,380	10
11	28,840	28,920	29,000	29,080	29,150	29,230	29,310	29,390	29,460	29,540	29,610	29,690	29,760	29,840	29,910	29,980	30,060	30,130	30,200	30,270	30,340	11
12	31,940	32,030	32,120	32,200	32,290	32,380	32,460	32,550	32,630	32,720	32,800	32,890	32,970	33,050	33,130	33,210	33,300	33,380	33,460	33,540	33,620	12
13	35,070	35,170	35,260	35,360	35,460	35,550	35,650	35,750	35,840	35,930	36,030	36,120	36,210	36,310	36,400	36,490	36,580	36,670	36,760	36,850	36,940	13
14	38,220	38,330	38,440	38,550	38,650	38,760	38,860	38,970	39,070	39,180	39,280	39,380	39,490	39,590	39,690	39,790	39,890	39,990	40,090	40,190	40,290	14
15	41,400	41,520	41,640	41,750	41,870	41,990	42,100	42,220	42,330	42,440	42,560	42,670	42,780	42,900	43,010	43,120	43,230	43,340	43,450	43,560	43,670	15
16	44,600	44,730	44,850	44,980	45,110	45,240	45,360	45,490	45,610	45,740	45,860	45,990	46,110	46,230	46,360	46,480	46,600	46,720	46,840	46,960	47,080	16
17	51,140	51,280	51,430	51,570	51,710	51,840	51,980	52,120	52,260	52,390	52,530	52,670	52,800	52,930	53,070	53,200	53,330	53,460	53,590	53,720	53,850	17
18	57,690	57,840	58,000	58,150	58,300	58,450	58,600	58,750	58,900	59,050	59,200	59,340	59,490	59,630	59,780	59,920	60,060	60,200	60,340	60,480	60,620	18
19	64,230	64,400	64,570	64,730	64,900	65,060	65,220	65,390	65,550	65,710	65,860	66,020	66,180	66,330	66,490	66,640	66,790	66,940	67,100	67,250	67,390	19
20	69,740	69,910	70,080	70,250	70,410	70,580	70,750	70,910	71,070	71,240	71,400	71,560	71,720	71,880	72,030	72,190	72,350	72,500	72,660	72,810	72,960	20
21	75,240	75,420	75,590	75,760	75,930	76,100	76,270	76,430	76,600	76,770	76,930	77,090	77,260	77,420	77,580	77,740	77,900	78,060	78,220	78,370	78,530	21
22	80,750	80,930	81,100	81,270	81,450	81,620	81,790	81,960	82,130	82,300	82,460	82,630	82,800	82,960	83,130	83,290	83,450	83,610	83,780	83,940	84,100	22
23	87,020	87,170	87,330	87,480	87,630	87,780	87,930	88,080	88,220	88,370	88,520	88,660	88,810	88,950	89,090	89,230	89,370	89,510	89,650	89,790	89,930	23
24	93,290	93,420	93,550	93,680	93,810	93,940	94,070	94,190	94,320	94,450	94,570	94,690	94,810	94,930	95,050	95,170	95,290	95,410	95,530	95,640	95,760	24
25	99,550	99,670	99,780	99,890	99,990	100,100	100,200	100,300	100,400	100,500	100,600	100,700	100,800	100,900	101,000	101,100	101,200	101,300	101,400	101,500	101,600	25
26	101,000	101,300	101,500	101,700	101,900	102,100	102,400	102,600	102,800	103,000	103,200	103,400	103,700	103,900	104,100	104,300	104,500	104,700	104,900	105,100	105,400	26
27	102,500	102,900	103,200	103,500	103,800	104,200	104,500	104,800	105,200	105,500	105,800	106,200	106,500	106,800	107,200	107,500	107,800	108,100	108,500	108,800	109,100	27
28	104,000	104,400	104,900	105,300	105,800	106,200	106,700	107,100	107,500	108,000	108,400	108,900	109,300	109,800	110,200	110,700	111,100	111,600	112,000	112,500	112,900	28

HEADWATER ELEVATION

GATE ARRANGEMENT	814.0	814.1	814.2	814.3	814.4	814.5	814.6	814.7	814.8	814.9	815.0	815.1	815.2	815.3	815.4	815.5	815.6	815.7	815.8	815.9	816.0	GATE ARRANGEMENT
1	2,270	2,280	2,290	2,290	2,300	2,300	2,310	2,310	2,320	2,330	2,330	2,340	2,340	2,350	2,360	2,360						1
2	4,890	4,900	4,910	4,930	4,940	4,950	4,970	4,980	4,990	5,000	5,020	5,030	5,040	5,050	5,070	5,080	5,090	5,100	5,120	5,130	5,140	2
3	7,530	7,550	7,570	7,590	7,610	7,630	7,650	7,670	7,690	7,710	7,730	7,750	7,760	7,780	7,800	7,820	7,840	7,860	7,880	7,900	7,920	3
4	10,300	10,330	10,350	10,380	10,410	10,440	10,470	10,500	10,530	10,560	10,580	10,610	10,640	10,670	10,700	10,730	10,760	10,780	10,810	10,840	10,870	4
5	13,160	13,200	13,230	13,270	13,310	13,340	13,380	13,420	13,450	13,490	13,520	13,560	13,590	13,630	13,670	13,700	13,740	13,770	13,810	13,840	13,880	5
6	15,680	15,720	15,760	15,810	15,850	15,900	15,940	15,990	16,030	16,070	16,120	16,160	16,200	16,250	16,290	16,330	16,380	16,420	16,460	16,510	16,550	6
7	18,590	18,640	18,690	18,740	18,800	18,850	18,900	18,950	19,000	19,050	19,100	19,150	19,200	19,250	19,300	19,350	19,400	19,450	19,500	19,550	19,600	7
8	21,430	21,480	21,540	21,600	21,660	21,710	21,770	21,830	21,880	21,940	22,000	22,060	22,110	22,170	22,220	22,280	22,340	22,390	22,450	22,510	22,560	8
9	24,430	24,500	24,560	24,620	24,680	24,750	24,810	24,870	24,930	24,990	25,060	25,120	25,180	25,240	25,300	25,360	25,420	25,480	25,540	25,600	25,660	9
10	27,380	27,450	27,520	27,590	27,660	27,720	27,790	27,860	27,920	27,990	28,060	28,120	28,190	28,250	28,320	28,390	28,450	28,520	28,580	28,650	28,710	10
11	30,340	30,410	30,480	30,550	30,620	30,690	30,760	30,830	30,900	30,970	31,040	31,100	31,170	31,240	31,310	31,370	31,440	31,510	31,580	31,640	31,710	11
12	33,620	33,700	33,770	33,850	33,930	34,010	34,090	34,160	34,240	34,320	34,390	34,470	34,550	34,620	34,700	34,780	34,850	34,930	35,000	35,080	35,160	12
13	36,940	37,030	37,120	37,210	37,290	37,380	37,470	37,560	37,640	37,730	37,820	37,900	37,990	38,080	38,160	38,250	38,330	38,420	38,510	38,590	38,680	13
14	40,290	40,390	40,490	40,580	40,680	40,780	40,880	40,970	41,070	41,170	41,260	41,360	41,450	41,550	41,640	41,740	41,830	41,930	42,020	42,120	42,210	14
15	43,670	43,780	43,890	44,000	44,110	44,220	44,330	44,440	44,540	44,650	44,760	44,870	44,970	45,080	45,190	45,300	45,400	45,510	45,620	45,720	45,830	15
16	47,080	47,200	47,320	47,440	47,560	47,680	47,800	47,920	48,040	48,160	48,280	48,390	48,510	48,630	48,750	48,870	48,980	49,100	49,220	49,340	49,460	16
17	53,850	53,980	54,110	54,240	54,370	54,500	54,630	54,750	54,880	55,010	55,130	55,260	55,380	55,510	55,640	55,760	55,890	56,010	56,140	56,260	56,390	17
18	60,620	60,760	60,900	61,040	61,180	61,310	61,450	61,580	61,720	61,850	61,990	62,120	62,260	62,390	62,520	62,660	62,790	62,920	63,050	63,180	63,320	18
19	67,390	67,540	67,690	67,840	67,980	68,130	68,270	68,420	68,560	68,700	68,850	68,990	69,130	69,270	69,410	69,550	69,690	69,830	69,970	70,110	70,250	19
20	72,960	73,110	73,260	73,420	73,560	73,710	73,860	74,010	74,160	74,300	74,450	74,600	74,740	74,890	75,030	75,170	75,320	75,460	75,600	75,740	75,890	20
21	78,530	78,680	78,840	78,990	79,150	79,300	79,450	79,600	79,750	79,900	80,050	80,200	80,350	80,500	80,650	80,800	80,940	81,090	81,240	81,380	81,530	21
22	84,100	84,260	84,410	84,570	84,730	84,890	85,040	85,200	85,350	85,510	85,660	85,810	85,960	86,120	86,270	86,420	86,570	86,720	86,870	87,020	87,170	22
23	89,930	90,070	90,220	90,360	90,510	90,650	90,790	90,930	91,070	91,210	91,350	91,490	91,630	91,770	91,910	92,040	92,180	92,310	92,450	92,580	92,720	23
24	95,760	95,890	96,020	96,150	96,280	96,410	96,540	96,670	96,800	96,920	97,050	97,170	97,300	97,420	97,540	97,670	97,790	97,910	98,030	98,150	98,270	24
25	101,600	101,700	101,800	101,900	102,100	102,200	102,300	102,400	102,500	102,600	102,700	102,900	103,000	103,100	103,200	103,300	103,400	103,500	103,600	103,700	103,800	25
26	105,400	105,600	105,800	106,000	106,300	106,500	106,700	107,000	107,200	107,400	108,800	108,800	108,900	109,000	109,100	109,100	109,200	109,300	109,300	109,400	109,500	26
27	109,100	109,500	109,800	110,100	110,500	110,800	111,200	111,500	111,800	112,200	114,800	114,800	114,900	114,900	114,900	115,000	115,000	115,000	115,100	115,100	115,200	27
28	112,900	113,300	113,800	114,200	114,700	115,100	115,600	116,000	116,500	116,900	120,800	120,800	120,800	120,800	120,800	120,800	120,800	120,800	120,800	120,800	120,800	28

HEADWATER 812 to 816
TAILWATER 794.51 to 795.5

See special instruction for preventing gate overflow on page 2.

MAY 2008

TELLICO DAM
SPILLWAY DISCHARGE
IN CUBIC FEET PER SECOND

HEADWATER ELEVATION

GATE ARRANGEMENT	816.0	816.1	816.2	816.3	816.4	816.5	816.6	816.7	816.8	816.9	817.0	817.1	817.2	817.3	817.4	817.5	817.6	817.7	817.8	817.9	818.0	GATE ARRANGEMENT
1																						1
2	5,140	5,150	5,160																			2
3	7,920	7,940	7,950	7,970	7,990	8,010	8,030	8,050	8,070	8,080	8,100											3
4	10,870	10,900	10,930	10,960	10,980	11,010	11,040	11,070	11,100	11,120	11,150	11,360	11,730	12,200	12,760	13,390	14,080	14,850				4
5	13,880	13,920	13,950	13,990	14,020	14,060	14,090	14,130	14,160	14,200	14,230	14,450	14,830	15,300	15,870	16,500	17,210	17,980	18,800	19,690	20,630	5
6	16,550	16,590	16,640	16,680	16,720	16,760	16,800	16,850	16,890	16,930	16,970	17,200	17,580	18,060	18,630	19,270	19,980	20,760	21,590	22,480	23,430	6
7	19,600	19,650	19,700	19,750	19,790	19,840	19,890	19,940	19,990	20,040	20,080	20,320	20,700	21,190	21,770	22,420	23,130	23,920	24,760	25,650	26,600	7
8	22,560	22,620	22,670	22,730	22,780	22,840	22,900	22,950	23,010	23,060	23,120	23,360	23,750	24,250	24,830	25,490	26,210	27,000	27,850	28,750	29,710	8
9	25,660	25,720	25,780	25,840	25,900	25,960	26,020	26,080	26,140	26,200	26,260	26,500	26,900	27,400	27,980	28,640	29,370	30,160	31,010	31,920	32,880	9
10	28,710	28,780	28,840	28,910	28,970	29,030	29,100	29,160	29,230	29,290	29,360	29,600	30,010	30,510	31,100	31,770	32,500	33,300	34,160	35,070	36,030	10
11	31,710	31,780	31,850	31,910	31,980	32,050	32,110	32,180	32,250	32,320	32,380	32,630	33,040	33,550	34,140	34,810	35,550	36,350	37,210	38,130	39,100	11
12	35,160	35,230	35,310	35,380	35,460	35,530	35,610	35,690	35,760	35,840	35,910	36,170	36,590	37,110	37,710	38,390	39,130	39,940	40,810	41,730	42,710	12
13	38,680	38,760	38,850	38,930	39,020	39,110	39,190	39,280	39,360	39,450	39,530	39,800	40,230	40,760	41,370	42,060	42,810	43,630	44,510	45,450	46,430	13
14	42,210	42,310	42,400	42,500	42,590	42,690	42,780	42,880	42,970	43,070	43,160	43,440	43,870	44,410	45,030	45,730	46,490	47,320	48,210	49,150	50,150	14
15	45,830	45,940	46,050	46,150	46,260	46,370	46,470	46,580	46,690	46,800	46,900	47,200	47,640	48,190	48,830	49,540	50,310	51,160	52,060	53,010	54,020	15
16	49,460	49,570	49,690	49,810	49,930	50,050	50,160	50,280	50,400	50,520	50,640	50,940	51,400	51,960	52,610	53,330	54,120	54,970	55,880	56,850	57,870	16
17	56,390	56,510	56,630	56,760	56,880	57,010	57,130	57,260	57,380	57,510	57,630	57,940	58,400	58,970	59,620	60,350	61,140	62,000	62,920	63,890	64,920	17
18	63,320	63,450	63,580	63,710	63,840	63,970	64,100	64,230	64,360	64,490	64,630	64,940	65,410	65,980	66,640	67,370	68,170	69,030	69,960	70,940	71,970	18
19	70,250	70,380	70,520	70,660	70,800	70,930	71,070	71,210	71,350	71,480	71,620	71,940	72,410	72,990	73,660	74,390	75,200	76,070	77,000	77,980	79,020	19
20	75,890	76,030	76,170	76,310	76,450	76,590	76,730	76,870	77,010	77,150	77,290	77,610	78,090	78,670	79,340	80,080	80,890	81,760	82,690	83,670	84,710	20
21	81,530	81,670	81,820	81,960	82,100	82,250	82,390	82,530	82,680	82,820	82,960	83,290	83,770	84,350	85,020	85,760	86,570	87,450	88,380	89,370	90,410	21
22	87,170	87,320	87,460	87,610	87,760	87,900	88,050	88,200	88,340	88,490	88,630	88,960	89,450	90,030	90,700	91,450	92,260	93,140	94,070	95,060	96,110	22
23	92,720	92,860	93,010	93,150	93,300	93,440	93,580	93,730	93,870	94,010	94,150	94,480	94,960	95,540	96,210	96,950	97,760	98,630	99,560	100,500	101,600	23
24	98,270	98,410	98,550	98,700	98,840	98,980	99,120	99,260	99,400	99,540	99,670	100,000	100,500	101,100	101,700	102,500	103,300	104,100	105,100	106,000	107,100	24
25	103,800	104,000	104,100	104,200	104,400	104,500	104,700	104,800	104,900	105,100	105,200	105,500	106,000	106,600	107,200	108,000	108,800	109,600	110,500	111,500	112,600	25
26	109,500	109,600	109,700	109,800	109,900	110,000	110,100	110,200	110,300	110,300	110,400	110,700	111,200	111,700	112,300	113,000	113,800	114,600	115,500	116,400	117,400	26
27	115,200	115,200	115,300	115,300	115,400	115,400	115,500	115,500	115,600	115,600	115,700	115,900	116,300	116,800	117,400	118,100	118,800	119,600	120,400	121,300	122,300	27
28	120,800	120,800	120,900	120,900	120,900	120,900	120,900	120,900	120,900	120,900	120,900	121,100	121,500	121,900	122,500	123,100	123,800	124,500	125,300	126,200	127,100	28

HEADWATER ELEVATION

GATE ARRANGEMENT	818.0	818.1	818.2	818.3	818.4	818.5	818.6	818.7	818.8	818.9	819.0	819.1	819.2	819.3	819.4	819.5	819.6	819.7	819.8	819.9	820.0	GATE ARRANGEMENT
1																						1
2																						2
3																						3
4																						4
5	20,630	21,620	22,660	23,740	24,880																	5
6	23,430	24,420	25,470	26,560	27,700	28,890	30,130	31,400	32,720	34,090	35,490	36,940										6
7	26,600	27,600	28,660	29,760	30,900	32,100	33,340	34,620	35,950	37,320	38,730	40,180	41,680	43,210	44,780	46,390	48,040	49,730	51,460			7
8	29,710	30,720	31,780	32,890	34,040	35,250	36,490	37,790	39,120	40,500	41,920	43,380	44,880	46,420	48,000	49,620	51,280	52,980	54,710	56,480	58,290	8
9	32,880	33,900	34,960	36,070	37,230	38,430	39,690	40,980	42,320	43,700	45,120	46,580	48,090	49,630	51,220	52,840	54,500	56,200	57,940	59,710	61,520	9
10	36,030	37,050	38,120	39,240	40,400	41,610	42,870	44,170	45,510	46,900	48,330	49,790	51,300	52,850	54,440	56,070	57,740	59,440	61,180	62,960	64,780	10
11	39,100	40,120	41,190	42,310	43,480	44,700	45,950	47,260	48,610	50,000	51,430	52,900	54,420	55,970	57,560	59,190	60,870	62,570	64,320	66,100	67,920	11
12	42,710	43,740	44,830	45,960	47,130	48,360	49,620	50,940	52,290	53,690	55,130	56,620	58,140	59,700	61,300	62,940	64,620	66,340	68,100	69,890	71,720	12
13	46,430	47,470	48,570	49,710	50,890	52,130	53,400	54,730	56,090	57,500	58,950	60,440	61,980	63,550	65,160	66,810	68,500	70,230	72,000	73,800	75,640	13
14	50,150	51,200	52,300	53,450	54,640	55,890	57,170	58,500	59,880	61,300	62,760	64,260	65,800	67,380	69,000	70,660	72,360	74,090	75,870	77,680	79,530	14
15	54,020	55,090	56,200	57,360	58,570	59,830	61,130	62,470	63,860	65,290	66,760	68,280	69,830	71,430	73,060	74,740	76,450	78,200	79,990	81,810	83,670	15
16	57,870	58,950	60,070	61,240	62,460	63,730	65,040	66,400	67,800	69,240	70,730	72,250	73,820	75,430	77,070	78,760	80,480	82,240	84,040	85,880	87,750	16
17	64,920	66,000	67,130	68,310	69,530	70,800	72,120	73,480	74,890	76,340	77,820	79,350	80,930	82,540	84,190	85,880	87,600	89,370	91,170	93,020	94,890	17
18	71,970	73,050	74,190	75,370	76,600	77,880	79,200	80,570	81,980	83,430	84,920	86,460	88,030	89,650	91,300	93,000	94,730	96,500	98,310	100,200	102,000	18
19	79,020	80,110	81,250	82,440	83,670	84,950	86,280	87,650	89,060	90,520	92,020	93,560	95,140	96,760	98,420	100,100	101,900	103,600	105,400	107,300	109,200	19
20	84,710	85,810	86,950	88,140	89,380	90,660	91,990	93,360	94,780	96,240	97,740	99,280	100,900	102,500	104,100	105,800	107,600	109,400	111,200	113,000	114,900	20
21	90,410	91,500	92,650	93,840	95,080	96,370	97,700	99,070	100,500	101,900	103,500	105,000	106,600	108,200	109,900	111,600	113,300	115,100	116,900	118,700	120,600	21
22	96,110	97,200	98,350	99,540	100,800	102,100	103,400	104,800	106,200	107,700	109,200	110,700	112,300	113,900	115,600	117,300	119,000	120,800	122,600	124,500	126,400	22
23	101,600	102,700	103,800	105,000	106,300	107,600	108,900	110,300	111,700	113,200	114,700	116,300	117,900	119,500	121,200	122,900	124,600	126,400	128,200	130,100	132,000	23
24	107,100	108,200	109,300	110,500	111,800	113,100	114,400	115,800	117,300	118,700	120,300	121,800	123,400	125,000	126,700	128,400	130,200	132,000	133,800	135,700	137,600	24
25	112,600	113,700	114,800	116,000	117,300	118,600	120,000	121,400	122,800	124,300	125,800	127,400	129,000	130,600	132,300	134,000	135,800	137,600	139,400	141,300	143,200	25
26	117,400	118,500	119,700	121,000	122,200	123,600	124,900	126,300	127,800	129,300	130,800	132,400	134,000	135,700	137,400	139,100	140,900	142,700	144,500	146,400	148,400	26
27	122,300	123,400	124,600	125,900	127,100	128,500	129,900	131,300	132,800	134,300	135,800	137,400	139,100	140,700	142,500	144,200	146,000	147,800	149,700	151,600	153,500	27
28	127,100	128,300	129,500	130,800	132,100	133,400	134,800	136,300	137,800	139,300	140,900	142,500	144,100	145,800	147,500	149,300	151,100	153,000	154,800	156,800	158,700	28

MAY 2008

See special instruction for preventing gate overflow on page 2.

HEADWATER 816 to 820
TAILWATER 794.51 to 795.5

TELLICO DAM
SPILLWAY DISCHARGE
IN CUBIC FEET PER SECOND

GATE ARRANGEMENT	HEADWATER ELEVATION																				GATE ARRANGEMENT
	800.0	800.1	800.2	800.3	800.4	800.5	800.6	800.7	800.8	800.9	801.0	801.1	801.2	801.3	801.4	801.5	801.6	801.7	801.8	801.9	802.0	
1	1,040	1,060	1,070	1,080	1,090	1,110	1,120	1,130	1,140	1,150	1,170	1,180	1,190	1,200	1,210	1,220	1,230	1,250	1,260	1,270	1,280	1
2	2,240	2,270	2,300	2,330	2,350	2,380	2,410	2,430	2,460	2,480	2,510	2,530	2,560	2,580	2,610	2,630	2,650	2,680	2,700	2,720	2,750	2
3	3,460	3,500	3,540	3,580	3,620	3,660	3,710	3,750	3,780	3,820	3,860	3,900	3,940	3,980	4,010	4,050	4,090	4,120	4,160	4,200	4,230	3
4	4,350	4,430	4,500	4,570	4,650	4,720	4,790	4,860	4,920	4,990	5,060	5,120	5,190	5,250	5,320	5,380	5,440	5,500	5,560	5,620	5,680	4
5	5,560	5,640	5,710	5,790	5,860	5,940	6,020	6,090	6,170	6,250	6,320	6,400	6,480	6,550	6,630	6,710	6,780	6,860	6,930	7,010	7,080	5
6	6,970	7,040	7,120	7,200	7,280	7,350	7,430	7,510	7,590	7,670	7,750	7,820	7,900	7,980	8,060	8,140	8,220	8,290	8,370	8,450	8,530	6
7	8,330	8,420	8,510	8,600	8,690	8,780	8,870	8,960	9,050	9,150	9,240	9,330	9,420	9,510	9,600	9,700	9,790	9,880	9,970	10,060	10,150	7
8	9,670	9,770	9,880	9,980	10,080	10,190	10,290	10,390	10,500	10,600	10,710	10,810	10,910	11,020	11,120	11,230	11,330	11,430	11,540	11,640	11,750	8
9	11,100	11,220	11,340	11,450	11,570	11,690	11,800	11,920	12,040	12,160	12,270	12,390	12,510	12,630	12,750	12,860	12,980	13,100	13,220	13,330	13,450	9
10	12,540	12,670	12,800	12,930	13,060	13,190	13,320	13,450	13,580	13,710	13,840	13,970	14,100	14,230	14,370	14,500	14,630	14,760	14,890	15,020	15,150	10
11	13,980	14,130	14,270	14,410	14,550	14,700	14,840	14,990	15,130	15,270	15,420	15,560	15,710	15,850	16,000	16,140	16,280	16,430	16,570	16,720	16,860	11
12	15,610	15,770	15,930	16,090	16,240	16,400	16,560	16,720	16,880	17,040	17,200	17,350	17,510	17,670	17,830	17,990	18,150	18,310	18,470	18,630	18,780	12
13	17,280	17,450	17,620	17,790	17,960	18,140	18,310	18,480	18,660	18,830	19,010	19,180	19,350	19,530	19,700	19,880	20,050	20,220	20,400	20,570	20,740	13
14	18,950	19,140	19,330	19,510	19,700	19,890	20,080	20,270	20,460	20,640	20,830	21,020	21,210	21,400	21,590	21,780	21,970	22,160	22,350	22,540	22,720	14
15	20,680	20,880	21,080	21,280	21,480	21,690	21,890	22,090	22,300	22,500	22,700	22,910	23,110	23,320	23,520	23,720	23,930	24,130	24,330	24,540	24,740	15
16	22,390	22,610	22,820	23,040	23,260	23,480	23,690	23,910	24,130	24,350	24,570	24,790	25,010	25,230	25,450	25,660	25,880	26,100	26,320	26,540	26,750	16
17	26,830	27,060	27,290	27,520	27,750	27,980	28,210	28,440	28,670	28,900	29,130	29,360	29,590	29,820	30,060	30,290	30,520	30,750	30,980	31,210	31,440	17
18	31,270	31,510	31,750	31,990	32,230	32,480	32,720	32,960	33,210	33,450	33,690	33,940	34,180	34,420	34,670	34,910	35,150	35,400	35,640	35,880	36,120	18
19	35,710	35,960	36,210	36,470	36,720	36,980	37,230	37,490	37,740	38,000	38,250	38,510	38,770	39,020	39,280	39,530	39,790	40,040	40,300	40,550	40,810	19
20	39,380	39,750	40,120	40,490	40,860	41,220	41,590	41,950	42,310	42,670	43,020	43,380	43,730	44,080	44,430	44,780	45,130	45,480	45,820	46,170	46,510	20
21	43,050	43,550	44,030	44,520	44,990	45,470	45,940	46,410	46,870	47,330	47,790	48,250	48,700	49,150	49,590	50,030	50,470	50,910	51,350	51,780	52,210	21
22	46,730	47,340	47,940	48,540	49,130	49,720	50,300	50,870	51,440	52,000	52,560	53,110	53,660	54,210	54,750	55,280	55,820	56,340	56,870	57,390	57,910	22
23	46,730	47,340	47,940	48,540	49,130	49,720	50,300	50,870	51,440	52,000	52,560	53,110	53,660	54,210	54,750	55,280	55,820	56,340	56,870	57,390	57,910	23
24	46,730	47,340	47,940	48,540	49,130	49,720	50,300	50,870	51,440	52,000	52,560	53,110	53,660	54,210	54,750	55,280	55,820	56,340	56,870	57,390	57,910	24
25	46,730	47,340	47,940	48,540	49,130	49,720	50,300	50,870	51,440	52,000	52,560	53,110	53,660	54,210	54,750	55,280	55,820	56,340	56,870	57,390	57,910	25
26	46,730	47,340	47,940	48,540	49,130	49,720	50,300	50,870	51,440	52,000	52,560	53,110	53,660	54,210	54,750	55,280	55,820	56,340	56,870	57,390	57,910	26
27	46,730	47,340	47,940	48,540	49,130	49,720	50,300	50,870	51,440	52,000	52,560	53,110	53,660	54,210	54,750	55,280	55,820	56,340	56,870	57,390	57,910	27
28	46,730	47,340	47,940	48,540	49,130	49,720	50,300	50,870	51,440	52,000	52,560	53,110	53,660	54,210	54,750	55,280	55,820	56,340	56,870	57,390	57,910	28

GATE ARRANGEMENT	HEADWATER ELEVATION																				GATE ARRANGEMENT
	802.0	802.1	802.2	802.3	802.4	802.5	802.6	802.7	802.8	802.9	803.0	803.1	803.2	803.3	803.4	803.5	803.6	803.7	803.8	803.9	804.0	
1	1,280	1,290	1,300	1,310	1,320	1,330	1,340	1,350	1,360	1,370	1,380	1,390	1,400	1,410	1,420	1,430	1,440	1,450	1,460	1,470	1,480	1
2	2,750	2,770	2,790	2,820	2,840	2,860	2,880	2,900	2,920	2,950	2,970	2,990	3,010	3,030	3,050	3,070	3,090	3,110	3,130	3,150	3,170	2
3	4,230	4,270	4,300	4,340	4,370	4,400	4,440	4,470	4,500	4,540	4,570	4,600	4,640	4,670	4,700	4,730	4,760	4,790	4,820	4,860	4,890	3
4	5,680	5,740	5,790	5,850	5,910	5,960	6,020	6,070	6,120	6,170	6,230	6,280	6,330	6,380	6,430	6,480	6,520	6,570	6,620	6,660	6,710	4
5	7,080	7,160	7,230	7,310	7,380	7,450	7,530	7,600	7,670	7,740	7,810	7,880	7,950	8,020	8,080	8,150	8,220	8,280	8,340	8,410	8,470	5
6	8,530	8,610	8,680	8,760	8,840	8,910	8,990	9,070	9,140	9,220	9,290	9,370	9,440	9,510	9,590	9,660	9,730	9,800	9,870	9,940	10,010	6
7	10,150	10,240	10,330	10,420	10,510	10,600	10,690	10,780	10,870	10,960	11,050	11,130	11,220	11,310	11,390	11,480	11,560	11,650	11,730	11,810	11,900	7
8	11,750	11,850	11,950	12,050	12,160	12,260	12,360	12,460	12,560	12,660	12,760	12,860	12,960	13,060	13,160	13,260	13,350	13,450	13,550	13,640	13,730	8
9	13,450	13,570	13,680	13,800	13,920	14,030	14,150	14,260	14,380	14,490	14,600	14,720	14,830	14,940	15,050	15,160	15,270	15,380	15,490	15,590	15,700	9
10	15,150	15,280	15,410	15,540	15,670	15,800	15,920	16,050	16,180	16,310	16,430	16,560	16,680	16,810	16,930	17,050	17,180	17,300	17,420	17,540	17,660	10
11	16,860	17,000	17,150	17,290	17,430	17,570	17,710	17,850	17,990	18,130	18,270	18,410	18,550	18,680	18,820	18,950	19,090	19,220	19,350	19,480	19,610	11
12	18,780	18,940	19,100	19,260	19,410	19,570	19,720	19,880	20,030	20,180	20,340	20,490	20,640	20,790	20,940	21,090	21,230	21,380	21,520	21,670	21,810	12
13	20,740	20,910	21,090	21,260	21,430	21,600	21,770	21,940	22,100	22,270	22,440	22,600	22,770	22,930	23,090	23,250	23,410	23,570	23,730	23,890	24,040	13
14	22,720	22,910	23,100	23,280	23,470	23,650	23,840	24,020	24,200	24,390	24,570	24,750	24,920	25,100	25,280	25,450	25,630	25,800	25,970	26,140	26,310	14
15	24,740	24,940	25,140	25,340	25,540	25,740	25,940	26,140	26,330	26,530	26,720	26,920	27,110	27,300	27,490	27,680	27,860	28,050	28,230	28,410	28,590	15
16	26,750	26,970	27,190	27,400	27,620	27,830	28,040	28,250	28,460	28,670	28,880	29,090	29,300	29,500	29,700	29,900	30,100	30,300	30,500	30,690	30,890	16
17	31,440	31,670	31,900	32,120	32,350	32,580	32,800	33,030	33,250	33,470	33,700	33,920	34,140	34,350	34,570	34,790	35,000	35,210	35,420	35,630	35,840	17
18	36,120	36,360	36,610	36,850	37,090	37,330	37,560	37,800	38,040	38,270	38,510	38,740	38,980	39,210	39,440	39,670	39,900	40,120	40,350	40,570	40,800	18
19	40,810	41,060	41,320	41,570	41,820	42,070	42,330	42,580	42,830	43,080	43,320	43,570	43,820	44,060	44,310	44,550	44,790	45,040	45,280	45,510	45,750	19
20	46,510	46,850	47,190	47,530	47,860	48,200	48,530	48,870	49,200	49,530	49,860	50,180	50,510	50,830	51,160	51,390	51,610	51,830	52,050	52,270	52,490	20
21	52,210	52,640	53,060	53,480	53,900	54,320	54,740	55,150	55,570	55,980	56,390	56,790	57,200	57,600	58,000	58,230	58,430	58,630	58,830	59,030	59,230	21
22	57,910	58,420	58,930	59,440	59,950	60,450	60,950	61,440	61,940	62,430	62,920	63,400	63,890	64,370	64,850	65,070	65,250	65,430	65,610	65,790	65,960	22
23	57,910	58,420	58,930	59,440	59,950	60,450	60,950	61,440	61,940	62,430	62,920	63,400	63,890	64,370	64,850	65,150	65,430	65,710	65,990	66,270	66,540	23
24	57,910	58,420	58,930	59,440	59,950	60,450	60,950	61,440	61,940	62,430	62,920	63,400	63,890	64,370	64,850	65,240	65,620	66,000	66,370	66,750	67,120	24
25	57,910	58,420	58,930	59,440	59,950	60,450	60,950	61,440	61,940	62,430	62,920	63,400	63,890	64,370	64,850	65,330	65,810	66,280	66,760	67,230	67,700	25
26	57,910	58,420	58,930	59,440	59,950	60,450	60,950	61,440	61,940	62,430	62,920	63,400	63,890	64,370	64,850	65,330	65,810	66,280	66,760	67,230	67,700	26
27	57,910	58,420	58,930	59,440	59,950	60,450	60,950	61,440	61,940	62,430	62,920	63,400	63,890	64,370	64,850	65,330	65,810	66,280	66,760	67,230	67,700	27
28	57,910	58,420	58,930	59,440	59,950	60,450	60,950	61,440	61,940	62,430	62,920	63,400	63,890	64,370	64,850	65,330	65,810	66,280	66,760	67,230	67,700	28

HEADWATER 800 to 804
TAILWATER 795.51 to 796.5

MAY 2008

TELLICO DAM
SPILLWAY DISCHARGE
IN CUBIC FEET PER SECOND

GATE ARRANGEMENT	HEADWATER ELEVATION																					GATE ARRANGEMENT
	804.0	804.1	804.2	804.3	804.4	804.5	804.6	804.7	804.8	804.9	805.0	805.1	805.2	805.3	805.4	805.5	805.6	805.7	805.8	805.9	806.0	
1	1,480	1,480	1,490	1,500	1,510	1,520	1,530	1,540	1,550	1,560	1,560	1,570	1,580	1,590	1,600	1,610	1,620	1,620	1,630	1,640	1,650	1
2	3,170	3,190	3,210	3,230	3,250	3,270	3,290	3,310	3,330	3,350	3,360	3,380	3,400	3,420	3,440	3,460	3,480	3,490	3,510	3,530	3,550	2
3	4,890	4,920	4,950	4,980	5,010	5,040	5,070	5,100	5,120	5,150	5,180	5,210	5,240	5,270	5,300	5,320	5,350	5,380	5,410	5,440	5,460	3
4	6,710	6,750	6,800	6,840	6,890	6,930	6,970	7,020	7,060	7,100	7,140	7,180	7,220	7,260	7,300	7,340	7,380	7,420	7,450	7,490	7,530	4
5	8,470	8,530	8,590	8,650	8,710	8,770	8,820	8,880	8,930	8,990	9,040	9,090	9,150	9,200	9,250	9,300	9,350	9,400	9,440	9,490	9,540	5
6	10,010	10,080	10,150	10,220	10,290	10,350	10,420	10,490	10,550	10,610	10,680	10,740	10,800	10,870	10,930	10,990	11,050	11,110	11,170	11,230	11,290	6
7	11,900	11,980	12,060	12,140	12,220	12,290	12,370	12,450	12,530	12,600	12,680	12,750	12,830	12,900	12,970	13,040	13,120	13,190	13,260	13,330	13,400	7
8	13,730	13,830	13,920	14,010	14,100	14,190	14,280	14,370	14,460	14,550	14,630	14,720	14,800	14,890	14,970	15,050	15,140	15,220	15,300	15,380	15,460	8
9	15,700	15,800	15,910	16,010	16,110	16,220	16,320	16,420	16,520	16,610	16,710	16,810	16,910	17,000	17,100	17,190	17,280	17,370	17,470	17,560	17,650	9
10	17,660	17,780	17,890	18,010	18,120	18,240	18,350	18,470	18,580	18,690	18,800	18,910	19,020	19,120	19,230	19,340	19,440	19,550	19,650	19,750	19,850	10
11	19,610	19,740	19,870	19,990	20,120	20,240	20,370	20,490	20,610	20,730	20,850	20,970	21,080	21,200	21,310	21,430	21,540	21,660	21,770	21,880	21,990	11
12	21,810	21,950	22,090	22,230	22,370	22,500	22,640	22,770	22,900	23,030	23,160	23,290	23,420	23,550	23,670	23,800	23,920	24,050	24,170	24,290	24,410	12
13	24,040	24,200	24,350	24,500	24,650	24,790	24,940	25,090	25,230	25,370	25,510	25,650	25,790	25,930	26,070	26,200	26,340	26,470	26,610	26,740	26,870	13
14	26,310	26,470	26,640	26,800	26,960	27,120	27,280	27,440	27,590	27,740	27,900	28,050	28,200	28,350	28,490	28,640	28,790	28,930	29,070	29,210	29,350	14
15	28,590	28,770	28,950	29,120	29,300	29,470	29,640	29,810	29,970	30,140	30,300	30,470	30,630	30,790	30,940	31,100	31,260	31,410	31,570	31,720	31,870	15
16	30,890	31,080	31,270	31,450	31,640	31,820	32,000	32,180	32,360	32,540	32,710	32,880	33,060	33,230	33,390	33,560	33,730	33,890	34,050	34,220	34,380	16
17	35,840	36,050	36,250	36,450	36,650	36,850	37,050	37,250	37,440	37,630	37,820	38,010	38,200	38,390	38,570	38,760	38,940	39,120	39,300	39,480	39,660	17
18	40,800	41,020	41,240	41,450	41,670	41,890	42,100	42,310	42,520	42,730	42,940	43,140	43,350	43,550	43,750	43,960	44,160	44,350	44,550	44,750	44,940	18
19	45,750	45,990	46,220	46,460	46,690	46,920	47,150	47,380	47,600	47,830	48,050	48,270	48,500	48,720	48,940	49,150	49,370	49,590	49,800	50,010	50,230	19
20	52,490	52,700	52,920	53,130	53,350	53,560	53,770	53,980	54,180	54,390	54,590	54,800	55,000	55,200	55,400	55,600	55,800	56,000	56,190	56,390	56,580	20
21	59,230	59,420	59,620	59,810	60,000	60,200	60,390	60,580	60,760	60,950	61,140	61,320	61,510	61,690	61,870	62,050	62,230	62,410	62,590	62,760	62,940	21
22	65,960	66,140	66,310	66,490	66,660	66,830	67,010	67,180	67,340	67,510	67,680	67,850	68,010	68,180	68,340	68,500	68,660	68,820	68,980	69,140	69,290	22
23	66,540	66,810	67,090	67,360	67,630	67,900	68,170	68,430	68,700	68,960	69,230	69,490	69,750	70,010	70,270	70,530	70,790	71,050	71,300	71,560	71,810	23
24	67,120	67,490	67,860	68,230	68,600	68,960	69,330	69,690	70,050	70,410	70,770	71,130	71,490	71,850	72,210	72,560	72,920	73,270	73,620	73,980	74,330	24
25	67,700	68,170	68,630	69,100	69,560	70,030	70,490	70,950	71,410	71,860	72,320	72,780	73,230	73,690	74,140	74,590	75,050	75,500	75,950	76,400	76,850	25
26	67,700	68,170	68,630	69,100	69,560	70,030	70,490	70,950	71,410	71,860	72,320	72,780	73,230	73,690	74,140	74,590	75,050	75,500	75,950	76,400	76,850	26
27	67,700	68,170	68,630	69,100	69,560	70,030	70,490	70,950	71,410	71,860	72,320	72,780	73,230	73,690	74,140	74,590	75,050	75,500	75,950	76,400	76,850	27
28	67,700	68,170	68,630	69,100	69,560	70,030	70,490	70,950	71,410	71,860	72,320	72,780	73,230	73,690	74,140	74,590	75,050	75,500	75,950	76,400	76,850	28

GATE ARRANGEMENT	HEADWATER ELEVATION																					GATE ARRANGEMENT
	806.0	806.1	806.2	806.3	806.4	806.5	806.6	806.7	806.8	806.9	807.0	807.1	807.2	807.3	807.4	807.5	807.6	807.7	807.8	807.9	808.0	
1	1,650	1,660	1,670	1,670	1,680	1,690	1,700	1,710	1,710	1,720	1,730	1,740	1,750	1,750	1,760	1,770	1,780	1,780	1,790	1,800	1,810	1
2	3,550	3,560	3,580	3,600	3,620	3,630	3,650	3,670	3,690	3,700	3,720	3,740	3,750	3,770	3,790	3,800	3,820	3,840	3,850	3,870	3,890	2
3	5,460	5,490	5,520	5,540	5,570	5,600	5,620	5,650	5,680	5,700	5,730	5,760	5,780	5,810	5,830	5,860	5,880	5,910	5,930	5,960	5,980	3
4	7,530	7,570	7,600	7,640	7,670	7,710	7,750	7,780	7,820	7,850	7,880	7,920	7,950	7,990	8,020	8,050	8,090	8,120	8,150	8,180	8,220	4
5	9,540	9,580	9,630	9,680	9,720	9,770	9,810	9,850	9,900	9,940	9,980	10,020	10,070	10,110	10,150	10,190	10,230	10,270	10,320	10,360	10,400	5
6	11,290	11,350	11,400	11,460	11,520	11,580	11,630	11,690	11,740	11,800	11,850	11,910	11,960	12,020	12,070	12,120	12,180	12,230	12,280	12,340	12,390	6
7	13,400	13,470	13,540	13,600	13,670	13,740	13,800	13,870	13,940	14,000	14,070	14,130	14,200	14,260	14,320	14,390	14,450	14,510	14,580	14,640	14,700	7
8	15,460	15,540	15,620	15,700	15,780	15,850	15,930	16,010	16,080	16,160	16,230	16,310	16,380	16,460	16,530	16,600	16,680	16,750	16,820	16,890	16,960	8
9	17,650	17,740	17,830	17,920	18,000	18,090	18,180	18,270	18,350	18,440	18,520	18,610	18,690	18,770	18,860	18,940	19,020	19,100	19,190	19,270	19,350	9
10	19,850	19,960	20,060	20,160	20,260	20,360	20,450	20,550	20,650	20,740	20,840	20,940	21,030	21,120	21,220	21,310	21,400	21,500	21,590	21,680	21,770	10
11	21,990	22,100	22,210	22,320	22,420	22,530	22,640	22,740	22,850	22,950	23,060	23,160	23,260	23,370	23,470	23,570	23,670	23,780	23,880	23,980	24,080	11
12	24,410	24,530	24,650	24,770	24,890	25,000	25,120	25,230	25,350	25,460	25,580	25,690	25,800	25,920	26,030	26,140	26,250	26,360	26,470	26,580	26,690	12
13	26,870	27,000	27,130	27,250	27,380	27,510	27,630	27,760	27,880	28,010	28,130	28,250	28,380	28,500	28,620	28,740	28,860	28,980	29,100	29,220	29,340	13
14	29,350	29,490	29,630	29,770	29,910	30,040	30,180	30,310	30,450	30,580	30,710	30,840	30,980	31,110	31,240	31,370	31,500	31,620	31,750	31,880	32,010	14
15	31,870	32,020	32,170	32,310	32,460	32,610	32,750	32,900	33,040	33,180	33,320	33,470	33,610	33,750	33,880	34,020	34,160	34,300	34,440	34,570	34,710	15
16	34,380	34,540	34,690	34,850	35,010	35,160	35,320	35,470	35,620	35,770	35,920	36,070	36,220	36,370	36,520	36,670	36,820	36,960	37,110	37,260	37,400	16
17	39,660	39,840	40,010	40,190	40,360	40,530	40,710	40,880	41,050	41,220	41,380	41,550	41,720	41,880	42,050	42,220	42,380	42,540	42,710	42,870	43,040	17
18	44,940	45,140	45,330	45,520	45,710	45,900	46,090	46,280	46,470	46,660	46,840	47,030	47,210	47,400	47,580	47,760	47,940	48,130	48,310	48,490	48,670	18
19	50,230	50,440	50,650	50,860	51,070	51,280	51,480	51,690	51,890	52,100	52,300	52,500	52,710	52,910	53,110	53,310	53,510	53,710	53,900	54,100	54,300	19
20	56,580	56,780	56,970	57,160	57,350	57,540	57,730	57,920	58,100	58,290	58,470	58,660	58,840	59,030	59,210	59,400	59,580	59,760	59,950	60,130	60,310	20
21	62,940	63,110	63,290	63,460	63,630	63,800	63,970	64,140	64,310	64,480	64,650	64,810	64,980	65,150	65,320	65,480	65,650	65,820	65,990	66,160	66,320	21
22	69,290	69,450	69,610	69,760	69,910	70,060	70,220	70,370	70,520	70,670	70,820	70,970	71,120	71,270	71,420	71,570	71,720	71,880	72,030	72,180	72,340	22
23	71,810	72,060	72,320	72,570	72,820	73,070	73,320	73,570	73,820	74,070	74,320	74,560	74,810	75,060	75,310	75,560	75,800	76,050	76,300	76,550	76,800	23
24	74,330	74,680	75,030	75,380	75,730	76,080	76,420	76,770	77,120	77,460	77,810	78,160	78,500	78,850	79,190	79,540	79,880	80,230	80,580	80,920	81,270	24
25	76,850	77,290	77,740	78,190	78,640	79,080	79,530	79,970	80,420	80,860	81,310	81,750	82,190	82,640	83,080	83,520	83,960	84,410	84,850	85,290	85,730	25
26	76,850	77,290	77,740	78,190	78,640	79,080	79,530	79,970	80,420	80,860	81,310	81,750	82,190	82,640	83,080	83,520	83,960	84,410	84,850	85,290	85,730	26
27	76,850	77,290	77,740	78,190	78,640	79,080	79,530	79,970	80,420	80,860	81,310	81,750	82,190	82,640	83,080	83,520	83,960	84,410	84,850	85,290	85,730	27
28	76,850	77,290	77,740	78,190	78,640	79,080	79,530	79,970	80,420	80,860	81,310	81,750	82,190	82,640	83,080	83,520	83,960	84,410	84,850	85,290	85,730	28

MAY 2008

HEADWATER 804 to 808
TAILWATER 795.51 to 796.5

TELLICO DAM
SPILLWAY DISCHARGE
IN CUBIC FEET PER SECOND

GATE ARRANGEMENT	HEADWATER ELEVATION																				GATE ARRANGEMENT
	808.0	808.1	808.2	808.3	808.4	808.5	808.6	808.7	808.8	808.9	809.0	809.1	809.2	809.3	809.4	809.5	809.6	809.7	809.8	809.9	810.0	
1	1,810	1,810	1,820	1,830	1,840	1,840	1,850	1,860	1,870	1,870	1,880	1,890	1,890	1,900	1,910	1,920	1,920	1,930	1,940	1,940	1,950	1
2	3,890	3,900	3,920	3,930	3,950	3,970	3,980	4,000	4,010	4,030	4,040	4,060	4,080	4,090	4,110	4,120	4,140	4,150	4,170	4,180	4,200	2
3	5,980	6,010	6,030	6,060	6,080	6,110	6,130	6,160	6,180	6,200	6,230	6,250	6,280	6,300	6,320	6,350	6,370	6,390	6,420	6,440	6,460	3
4	8,220	8,250	8,280	8,310	8,350	8,380	8,410	8,440	8,470	8,500	8,530	8,560	8,600	8,630	8,660	8,690	8,720	8,750	8,780	8,810	8,840	4
5	10,400	10,440	10,480	10,520	10,560	10,600	10,650	10,690	10,730	10,770	10,810	10,850	10,890	10,930	10,970	11,020	11,060	11,100	11,140	11,180	11,220	5
6	12,390	12,440	12,490	12,540	12,600	12,650	12,700	12,750	12,800	12,850	12,900	12,950	13,000	13,050	13,100	13,150	13,200	13,250	13,300	13,350	13,400	6
7	14,700	14,760	14,820	14,880	14,950	15,010	15,070	15,130	15,190	15,250	15,310	15,370	15,430	15,490	15,540	15,600	15,660	15,720	15,780	15,840	15,890	7
8	16,960	17,030	17,110	17,180	17,250	17,320	17,380	17,450	17,520	17,590	17,660	17,730	17,800	17,860	17,930	18,000	18,070	18,130	18,200	18,270	18,330	8
9	19,350	19,430	19,510	19,590	19,670	19,750	19,830	19,910	19,990	20,070	20,140	20,220	20,300	20,380	20,450	20,530	20,610	20,680	20,760	20,840	20,910	9
10	21,770	21,860	21,950	22,040	22,130	22,220	22,310	22,390	22,480	22,570	22,660	22,740	22,830	22,920	23,000	23,090	23,170	23,260	23,340	23,420	23,510	10
11	24,080	24,180	24,280	24,380	24,480	24,580	24,670	24,770	24,870	24,970	25,070	25,170	25,260	25,360	25,460	25,550	25,650	25,740	25,840	25,930	26,030	11
12	26,690	26,800	26,910	27,020	27,130	27,240	27,340	27,450	27,560	27,670	27,770	27,880	27,990	28,090	28,200	28,300	28,410	28,510	28,620	28,720	28,830	12
13	29,340	29,450	29,570	29,690	29,810	29,930	30,040	30,160	30,280	30,390	30,510	30,630	30,740	30,860	30,970	31,090	31,200	31,310	31,430	31,540	31,650	13
14	32,010	32,140	32,270	32,390	32,520	32,650	32,770	32,900	33,030	33,150	33,280	33,400	33,530	33,650	33,780	33,900	34,020	34,150	34,270	34,390	34,520	14
15	34,710	34,850	34,980	35,120	35,260	35,390	35,530	35,660	35,800	35,930	36,070	36,200	36,330	36,470	36,600	36,730	36,860	37,000	37,130	37,260	37,390	15
16	37,400	37,550	37,690	37,840	37,990	38,130	38,280	38,420	38,570	38,710	38,850	39,000	39,140	39,280	39,430	39,570	39,710	39,850	39,990	40,140	40,280	16
17	43,040	43,200	43,360	43,520	43,680	43,850	44,010	44,170	44,330	44,490	44,650	44,810	44,970	45,120	45,280	45,440	45,600	45,750	45,910	46,070	46,220	17
18	48,670	48,850	49,030	49,200	49,380	49,560	49,740	49,910	50,090	50,270	50,440	50,620	50,790	50,970	51,140	51,310	51,480	51,660	51,830	52,000	52,170	18
19	54,300	54,500	54,690	54,890	55,080	55,280	55,470	55,660	55,850	56,050	56,240	56,430	56,620	56,810	57,000	57,180	57,370	57,560	57,740	57,930	58,110	19
20	60,310	60,490	60,680	60,860	61,040	61,230	61,410	61,590	61,770	61,950	62,140	62,320	62,500	62,680	62,860	63,040	63,220	63,400	63,590	63,770	63,940	20
21	66,320	66,490	66,660	66,830	67,000	67,170	67,350	67,520	67,690	67,860	68,030	68,210	68,380	68,560	68,730	68,900	69,080	69,250	69,430	69,600	69,780	21
22	72,340	72,490	72,650	72,810	72,970	73,120	73,280	73,450	73,610	73,770	73,930	74,100	74,260	74,430	74,600	74,760	74,930	75,100	75,270	75,440	75,610	22
23	76,800	77,050	77,300	77,560	77,810	78,060	78,320	78,570	78,830	79,080	79,340	79,590	79,850	80,110	80,370	80,620	80,880	81,140	81,400	81,660	81,920	23
24	81,270	81,610	81,960	82,310	82,650	83,000	83,350	83,700	84,040	84,390	84,740	85,090	85,440	85,790	86,140	86,490	86,840	87,190	87,540	87,890	88,240	24
25	85,730	86,170	86,610	87,060	87,500	87,940	88,380	88,820	89,260	89,700	90,140	90,580	91,020	91,470	91,910	92,350	92,790	93,230	93,670	94,110	94,550	25
26	85,730	86,170	86,610	87,060	87,500	87,940	88,380	88,820	89,260	89,700	90,140	90,580	91,020	91,470	91,910	92,350	92,790	93,230	93,670	94,110	94,550	26
27	85,730	86,170	86,610	87,060	87,500	87,940	88,380	88,820	89,260	89,700	90,140	90,580	91,020	91,470	91,910	92,350	92,790	93,230	93,670	94,110	94,550	27
28	85,730	86,170	86,610	87,060	87,500	87,940	88,380	88,820	89,260	89,700	90,140	90,580	91,020	91,470	91,910	92,350	92,790	93,230	93,670	94,110	94,550	28

GATE ARRANGEMENT	HEADWATER ELEVATION																				GATE ARRANGEMENT
	810.0	810.1	810.2	810.3	810.4	810.5	810.6	810.7	810.8	810.9	811.0	811.1	811.2	811.3	811.4	811.5	811.6	811.7	811.8	811.9	812.0	
1	1,950	1,960	1,970	1,970	1,980	1,990	1,990	2,000	2,010	2,010	2,020	2,030	2,030	2,040	2,050	2,050	2,060	2,070	2,070	2,080	2,090	1
2	4,200	4,210	4,230	4,240	4,260	4,270	4,290	4,300	4,310	4,330	4,340	4,360	4,370	4,390	4,400	4,420	4,430	4,440	4,460	4,470	4,490	2
3	6,460	6,490	6,510	6,530	6,560	6,580	6,600	6,620	6,650	6,670	6,690	6,710	6,740	6,760	6,780	6,800	6,820	6,850	6,870	6,890	6,910	3
4	8,840	8,870	8,900	8,930	8,960	8,990	9,020	9,050	9,080	9,110	9,140	9,170	9,210	9,240	9,270	9,300	9,330	9,360	9,390	9,420	9,450	4
5	11,220	11,260	11,300	11,340	11,380	11,420	11,460	11,500	11,540	11,580	11,620	11,660	11,700	11,740	11,780	11,820	11,860	11,900	11,940	11,980	12,020	5
6	13,400	13,450	13,500	13,550	13,590	13,640	13,690	13,740	13,790	13,830	13,880	13,930	13,980	14,020	14,070	14,120	14,170	14,210	14,260	14,310	14,350	6
7	15,890	15,950	16,010	16,070	16,120	16,180	16,240	16,300	16,350	16,410	16,460	16,520	16,580	16,630	16,690	16,740	16,800	16,860	16,910	16,970	17,020	7
8	18,330	18,400	18,460	18,530	18,600	18,660	18,730	18,790	18,860	18,920	18,980	19,050	19,110	19,180	19,240	19,310	19,370	19,430	19,500	19,560	19,620	8
9	20,910	20,990	21,060	21,140	21,210	21,290	21,360	21,440	21,510	21,580	21,660	21,730	21,800	21,880	21,950	22,020	22,090	22,170	22,240	22,310	22,380	9
10	23,510	23,590	23,670	23,760	23,840	23,920	24,000	24,080	24,160	24,240	24,320	24,410	24,490	24,560	24,640	24,720	24,800	24,880	24,960	25,040	25,120	10
11	26,030	26,120	26,220	26,310	26,400	26,500	26,590	26,680	26,770	26,860	26,960	27,050	27,140	27,230	27,310	27,400	27,490	27,580	27,670	27,750	27,840	11
12	28,830	28,930	29,030	29,130	29,240	29,340	29,440	29,540	29,640	29,740	29,840	29,940	30,040	30,140	30,240	30,330	30,430	30,530	30,620	30,720	30,820	12
13	31,650	31,770	31,880	31,990	32,100	32,210	32,320	32,430	32,540	32,650	32,760	32,870	32,980	33,090	33,190	33,300	33,410	33,510	33,620	33,720	33,830	13
14	34,520	34,640	34,760	34,880	35,000	35,120	35,240	35,360	35,480	35,600	35,720	35,840	35,950	36,070	36,190	36,300	36,420	36,530	36,650	36,760	36,880	14
15	37,390	37,520	37,650	37,780	37,910	38,040	38,170	38,300	38,420	38,550	38,680	38,810	38,930	39,060	39,180	39,310	39,430	39,560	39,680	39,800	39,930	15
16	40,280	40,420	40,560	40,700	40,840	40,980	41,110	41,250	41,390	41,530	41,670	41,800	41,940	42,070	42,210	42,340	42,480	42,610	42,740	42,880	43,010	16
17	46,220	46,380	46,530	46,690	46,840	46,990	47,140	47,300	47,450	47,600	47,750	47,900	48,050	48,190	48,340	48,490	48,640	48,780	48,930	49,070	49,210	17
18	52,170	52,340	52,510	52,670	52,840	53,010	53,170	53,340	53,500	53,670	53,830	53,990	54,150	54,320	54,480	54,640	54,790	54,950	55,110	55,270	55,420	18
19	58,110	58,300	58,480	58,660	58,840	59,020	59,200	59,380	59,560	59,740	59,910	60,090	60,260	60,440	60,610	60,780	60,950	61,120	61,290	61,460	61,630	19
20	63,940	64,120	64,300	64,480	64,660	64,840	65,020	65,190	65,370	65,550	65,720	65,900	66,070	66,240	66,420	66,590	66,760	66,940	67,110	67,280	67,450	20
21	69,780	69,950	70,130	70,300	70,480	70,650	70,830	71,000	71,180	71,350	71,530	71,700	71,880	72,050	72,230	72,400	72,570	72,750	72,920	73,090	73,270	21
22	75,610	75,780	75,950	76,120	76,290	76,470	76,640	76,810	76,990	77,160	77,340	77,510	77,690	77,860	78,040	78,210	78,390	78,560	78,740	78,910	79,090	22
23	81,920	82,180	82,450	82,710	82,970	83,120	83,280	83,430	83,580	83,730	83,890	84,040	84,190	84,340	84,490	84,640	84,790	84,940	85,090	85,240	85,390	23
24	88,240	88,590	88,940	89,290	89,650	89,780	89,910	90,050	90,180	90,310	90,440	90,570	90,690	90,820	90,950	91,070	91,200	91,320	91,450	91,570	91,690	24
25	94,550	95,000	95,440	95,880	96,320	96,440	96,550	96,660	96,770	96,880	96,990	97,090	97,200	97,300	97,410	97,510	97,610	97,710	97,800	97,900	98,000	25
26	94,550	95,000	95,440	95,880	96,320	96,550	96,770	96,990	97,210	97,430	97,650	97,870	98,090	98,300	98,520	98,730	98,950	99,160	99,380	99,590	99,800	26
27	94,550	95,000	95,440	95,880	96,320	96,650	96,990	97,320	97,650	97,980	98,310	98,640	98,970	99,300	99,630	99,960	100,300	100,600	101,000	101,300	101,600	27
28	94,550	95,000	95,440	95,880	96,320	96,760	97,200	97,650	98,090	98,530	98,970	99,420	99,860	100,300	100,700	101,200	101,600	102,100	102,500	103,000	103,400	28

HEADWATER 808 to 812
TAILWATER 795.51 to 796.5

MAY 2008

TELLICO DAM
SPILLWAY DISCHARGE
IN CUBIC FEET PER SECOND

HEADWATER ELEVATION

GATE ARRANGEMENT	812.0	812.1	812.2	812.3	812.4	812.5	812.6	812.7	812.8	812.9	813.0	813.1	813.2	813.3	813.4	813.5	813.6	813.7	813.8	813.9	814.0	GATE ARRANGEMENT
1	2,090	2,090	2,100	2,110	2,110	2,120	2,120	2,130	2,140	2,140	2,150	2,160	2,160	2,170	2,180	2,180	2,190	2,190	2,200	2,210	2,210	1
2	4,490	4,500	4,510	4,530	4,540	4,560	4,570	4,580	4,600	4,610	4,620	4,640	4,650	4,670	4,680	4,690	4,710	4,720	4,730	4,750	4,760	2
3	6,910	6,930	6,950	6,970	7,000	7,020	7,040	7,060	7,080	7,100	7,120	7,140	7,160	7,190	7,210	7,230	7,250	7,270	7,290	7,310	7,330	3
4	9,450	9,480	9,510	9,540	9,570	9,600	9,630	9,660	9,690	9,730	9,760	9,790	9,820	9,850	9,880	9,910	9,940	9,970	10,010	10,040	10,070	4
5	12,020	12,050	12,090	12,130	12,170	12,210	12,250	12,280	12,320	12,360	12,400	12,440	12,470	12,510	12,550	12,580	12,620	12,660	12,700	12,730	12,770	5
6	14,350	14,400	14,440	14,490	14,540	14,580	14,630	14,670	14,720	14,770	14,810	14,860	14,900	14,950	14,990	15,040	15,080	15,130	15,170	15,210	15,260	6
7	17,020	17,080	17,130	17,190	17,240	17,300	17,350	17,400	17,460	17,510	17,570	17,620	17,680	17,730	17,780	17,840	17,890	17,940	18,000	18,050	18,100	7
8	19,620	19,690	19,750	19,810	19,880	19,940	20,000	20,070	20,130	20,190	20,250	20,320	20,380	20,440	20,500	20,570	20,630	20,690	20,750	20,810	20,880	8
9	22,380	22,450	22,520	22,590	22,670	22,740	22,810	22,880	22,950	23,020	23,090	23,160	23,230	23,300	23,360	23,430	23,500	23,570	23,640	23,710	23,780	9
10	25,120	25,190	25,270	25,350	25,430	25,500	25,580	25,660	25,740	25,810	25,890	25,960	26,040	26,110	26,190	26,260	26,340	26,410	26,490	26,560	26,640	10
11	27,840	27,930	28,010	28,100	28,180	28,270	28,350	28,430	28,520	28,600	28,680	28,760	28,850	28,930	29,010	29,090	29,170	29,250	29,330	29,400	29,480	11
12	30,820	30,910	31,000	31,100	31,190	31,280	31,380	31,470	31,560	31,650	31,740	31,830	31,920	32,010	32,100	32,190	32,280	32,370	32,450	32,540	32,630	12
13	33,830	33,930	34,040	34,140	34,240	34,340	34,440	34,550	34,650	34,750	34,850	34,950	35,040	35,140	35,240	35,340	35,440	35,530	35,630	35,730	35,820	13
14	36,880	36,990	37,100	37,210	37,330	37,440	37,550	37,660	37,770	37,880	37,980	38,090	38,200	38,310	38,420	38,520	38,630	38,730	38,840	38,950	39,050	14
15	39,930	40,050	40,170	40,290	40,410	40,530	40,650	40,770	40,890	41,010	41,130	41,250	41,370	41,480	41,600	41,720	41,830	41,950	42,070	42,180	42,300	15
16	43,010	43,140	43,270	43,400	43,530	43,660	43,790	43,920	44,050	44,180	44,300	44,430	44,560	44,680	44,810	44,940	45,060	45,190	45,310	45,440	45,560	16
17	49,210	49,360	49,500	49,640	49,780	49,920	50,060	50,200	50,340	50,480	50,620	50,750	50,890	51,030	51,160	51,300	51,430	51,570	51,700	51,830	51,970	17
18	55,420	55,580	55,730	55,880	56,030	56,180	56,340	56,490	56,630	56,780	56,930	57,080	57,220	57,370	57,510	57,660	57,800	57,950	58,090	58,230	58,370	18
19	61,630	61,790	61,960	62,120	62,280	62,450	62,610	62,770	62,930	63,090	63,240	63,400	63,560	63,710	63,870	64,020	64,170	64,330	64,480	64,630	64,780	19
20	67,450	67,620	67,780	67,950	68,120	68,280	68,450	68,620	68,780	68,940	69,110	69,270	69,430	69,590	69,750	69,910	70,070	70,230	70,390	70,550	70,710	20
21	73,270	73,440	73,610	73,780	73,950	74,120	74,290	74,460	74,630	74,800	74,970	75,140	75,310	75,470	75,640	75,810	75,970	76,140	76,300	76,470	76,630	21
22	79,090	79,260	79,440	79,610	79,790	79,960	80,140	80,310	80,490	80,660	80,830	81,010	81,180	81,360	81,530	81,700	81,870	82,050	82,220	82,390	82,560	22
23	85,390	85,550	85,700	85,860	86,020	86,170	86,330	86,480	86,630	86,790	86,940	87,090	87,250	87,400	87,550	87,700	87,850	88,000	88,150	88,300	88,450	23
24	91,690	91,830	91,970	92,110	92,240	92,380	92,510	92,650	92,780	92,910	93,050	93,180	93,310	93,440	93,570	93,700	93,830	93,950	94,080	94,210	94,330	24
25	98,000	98,120	98,240	98,350	98,470	98,590	98,700	98,820	98,930	99,040	99,150	99,260	99,370	99,480	99,590	99,700	99,800	99,910	100,000	100,100	100,200	25
26	99,800	100,000	100,300	100,500	100,700	100,900	101,200	101,400	101,600	101,800	102,100	102,300	102,500	102,700	102,900	103,200	103,400	103,600	103,800	104,000	104,300	26
27	101,600	101,900	102,300	102,600	103,000	103,300	103,600	104,000	104,300	104,600	105,000	105,300	105,600	106,000	106,300	106,600	107,000	107,300	107,600	108,000	108,300	27
28	103,400	103,900	104,300	104,700	105,200	105,600	106,100	106,500	107,000	107,400	107,900	108,300	108,800	109,200	109,700	110,100	110,600	111,000	111,500	111,900	112,400	28

HEADWATER ELEVATION

GATE ARRANGEMENT	814.0	814.1	814.2	814.3	814.4	814.5	814.6	814.7	814.8	814.9	815.0	815.1	815.2	815.3	815.4	815.5	815.6	815.7	815.8	815.9	816.0	GATE ARRANGEMENT
1	2,210	2,220	2,220	2,230	2,240	2,240	2,250	2,260	2,260	2,270	2,270	2,280	2,290	2,290	2,300	2,300						1
2	4,760	4,770	4,780	4,800	4,810	4,820	4,840	4,850	4,860	4,880	4,890	4,900	4,910	4,930	4,940	4,950	4,970	4,980	4,990	5,000	5,020	2
3	7,330	7,350	7,370	7,390	7,410	7,430	7,450	7,470	7,490	7,510	7,530	7,550	7,570	7,590	7,610	7,630	7,650	7,670	7,690	7,710	7,730	3
4	10,070	10,100	10,130	10,160	10,190	10,230	10,260	10,290	10,320	10,350	10,380	10,420	10,450	10,480	10,510	10,540	10,570	10,610	10,640	10,670	10,700	4
5	12,770	12,810	12,840	12,880	12,910	12,950	12,990	13,020	13,060	13,090	13,130	13,170	13,200	13,240	13,270	13,310	13,340	13,380	13,420	13,450	13,490	5
6	15,260	15,300	15,350	15,390	15,430	15,480	15,520	15,570	15,610	15,650	15,700	15,740	15,780	15,820	15,870	15,910	15,950	15,990	16,040	16,080	16,120	6
7	18,100	18,160	18,210	18,260	18,310	18,370	18,420	18,470	18,520	18,580	18,630	18,680	18,730	18,780	18,830	18,880	18,940	18,990	19,040	19,090	19,140	7
8	20,880	20,940	21,000	21,060	21,120	21,180	21,240	21,310	21,370	21,430	21,490	21,550	21,610	21,670	21,730	21,790	21,850	21,910	21,970	22,030	22,090	8
9	23,780	23,840	23,910	23,980	24,050	24,110	24,180	24,250	24,310	24,380	24,450	24,510	24,580	24,650	24,710	24,780	24,840	24,910	24,970	25,040	25,100	9
10	26,640	26,710	26,780	26,860	26,930	27,000	27,080	27,150	27,220	27,290	27,360	27,440	27,510	27,580	27,650	27,720	27,790	27,860	27,930	28,000	28,070	10
11	29,480	29,560	29,640	29,720	29,790	29,870	29,950	30,020	30,100	30,170	30,250	30,330	30,400	30,470	30,550	30,620	30,700	30,770	30,840	30,920	30,990	11
12	32,630	32,710	32,800	32,890	32,970	33,060	33,140	33,230	33,310	33,400	33,480	33,560	33,650	33,730	33,810	33,900	33,980	34,060	34,140	34,230	34,310	12
13	35,820	35,920	36,020	36,110	36,210	36,300	36,390	36,490	36,580	36,680	36,770	36,860	36,960	37,050	37,140	37,230	37,330	37,420	37,510	37,600	37,690	13
14	39,050	39,150	39,260	39,360	39,470	39,570	39,670	39,780	39,880	39,980	40,080	40,180	40,290	40,390	40,490	40,590	40,690	40,790	40,890	40,990	41,090	14
15	42,300	42,410	42,530	42,640	42,750	42,870	42,980	43,090	43,210	43,320	43,430	43,540	43,660	43,770	43,880	43,990	44,100	44,210	44,330	44,440	44,550	15
16	45,560	45,680	45,810	45,930	46,050	46,180	46,300	46,420	46,540	46,670	46,790	46,910	47,030	47,160	47,280	47,400	47,520	47,640	47,770	47,890	48,010	16
17	51,970	52,100	52,230	52,360	52,490	52,630	52,760	52,890	53,020	53,150	53,280	53,410	53,540	53,670	53,800	53,930	54,050	54,180	54,310	54,440	54,570	17
18	58,370	58,510	58,650	58,790	58,930	59,070	59,210	59,350	59,490	59,630	59,770	59,900	60,040	60,180	60,310	60,450	60,590	60,720	60,860	61,000	61,130	18
19	64,780	64,930	65,080	65,230	65,370	65,520	65,670	65,820	65,960	66,110	66,250	66,400	66,540	66,690	66,830	66,980	67,120	67,260	67,410	67,550	67,690	19
20	70,710	70,860	71,020	71,180	71,330	71,490	71,640	71,790	71,950	72,100	72,250	72,410	72,560	72,710	72,860	73,010	73,160	73,310	73,460	73,610	73,760	20
21	76,630	76,800	76,960	77,120	77,290	77,450	77,610	77,770	77,930	78,090	78,250	78,410	78,570	78,730	78,890	79,050	79,200	79,360	79,520	79,670	79,830	21
22	82,560	82,730	82,900	83,070	83,240	83,410	83,580	83,750	83,920	84,090	84,250	84,420	84,590	84,750	84,920	85,080	85,250	85,410	85,570	85,730	85,900	22
23	88,450	88,600	88,760	88,920	89,080	89,240	89,390	89,550	89,710	89,860	90,020	90,170	90,320	90,480	90,630	90,780	90,930	91,080	91,230	91,380	91,530	23
24	94,330	94,480	94,630	94,770	94,920	95,060	95,210	95,350	95,500	95,640	95,780	95,920	96,060	96,200	96,340	96,480	96,620	96,760	96,900	97,030	97,170	24
25	100,200	100,400	100,500	100,600	100,800	100,900	101,000	101,200	101,300	101,400	101,500	101,700	101,800	101,900	102,100	102,200	102,300	102,400	102,600	102,700	102,800	25
26	104,300	104,500	104,700	105,000	105,200	105,500	105,700	105,900	106,200	106,400	108,000	108,000	108,100	108,200	108,300	108,400	108,500	108,600	108,600	108,700	108,800	26
27	108,300	108,700	109,000	109,400	109,700	110,000	110,400	110,700	111,100	111,400	114,400	114,400	114,500	114,500	114,600	114,600	114,600	114,700	114,700	114,800	114,800	27
28	112,400	112,800	113,300	113,700	114,200	114,600	115,100	115,500	116,000	116,400	120,800	120,800	120,800	120,800	120,800	120,800	120,800	120,800	120,800	120,800	120,800	28

MAY 2008

See special instruction for preventing gate overflow on page 2.

HEADWATER 812 to 816
TAILWATER 795.51 to 796.5

TELLICO DAM
SPILLWAY DISCHARGE
IN CUBIC FEET PER SECOND

GATE ARRANGEMENT	HEADWATER ELEVATION																				GATE ARRANGEMENT
	816.0	816.1	816.2	816.3	816.4	816.5	816.6	816.7	816.8	816.9	817.0	817.1	817.2	817.3	817.4	817.5	817.6	817.7	817.8	817.9	818.0	
1																						1
2	5,020	5,030	5,040																			2
3	7,730	7,750	7,760	7,780	7,800	7,820	7,840	7,860	7,880	7,900	7,920											3
4	10,700	10,730	10,760	10,790	10,830	10,860	10,890	10,920	10,950	10,980	11,010	11,230	11,600	12,070	12,630	13,260	13,960	14,730				4
5	13,490	13,520	13,560	13,590	13,630	13,660	13,700	13,730	13,770	13,800	13,840	14,060	14,430	14,910	15,470	16,110	16,810	17,580	18,410	19,290	20,230	5
6	16,120	16,160	16,200	16,250	16,290	16,330	16,370	16,410	16,450	16,490	16,530	16,760	17,140	17,620	18,190	18,830	19,540	20,320	21,150	22,040	22,980	6
7	19,140	19,190	19,240	19,290	19,340	19,390	19,440	19,490	19,540	19,590	19,640	19,870	20,260	20,750	21,330	21,980	22,700	23,480	24,320	25,220	26,170	7
8	22,090	22,150	22,200	22,260	22,320	22,380	22,440	22,500	22,560	22,610	22,670	22,910	23,310	23,810	24,400	25,060	25,780	26,570	27,420	28,330	29,290	8
9	25,100	25,170	25,230	25,290	25,360	25,420	25,480	25,550	25,610	25,670	25,740	25,980	26,390	26,890	27,480	28,150	28,880	29,670	30,530	31,440	32,400	9
10	28,070	28,140	28,210	28,280	28,340	28,410	28,480	28,550	28,620	28,680	28,750	29,000	29,410	29,920	30,510	31,180	31,920	32,720	33,580	34,490	35,460	10
11	30,990	31,060	31,140	31,210	31,280	31,350	31,430	31,500	31,570	31,640	31,710	31,970	32,380	32,890	33,490	34,160	34,900	35,710	36,570	37,490	38,460	11
12	34,310	34,390	34,470	34,550	34,630	34,710	34,800	34,880	34,960	35,040	35,120	35,380	35,800	36,330	36,930	37,620	38,370	39,180	40,050	40,980	41,970	12
13	37,690	37,780	37,880	37,970	38,060	38,150	38,240	38,330	38,420	38,510	38,600	38,880	39,310	39,840	40,460	41,150	41,910	42,730	43,620	44,560	45,550	13
14	41,090	41,190	41,290	41,390	41,490	41,590	41,690	41,790	41,890	41,990	42,090	42,370	42,810	43,350	43,980	44,680	45,450	46,280	47,170	48,120	49,120	14
15	44,550	44,660	44,770	44,880	44,990	45,100	45,210	45,320	45,430	45,540	45,650	45,950	46,400	46,950	47,590	48,300	49,080	49,920	50,830	51,780	52,800	15
16	48,010	48,130	48,250	48,380	48,500	48,620	48,740	48,870	48,990	49,110	49,240	49,540	50,000	50,570	51,220	51,950	52,740	53,600	54,510	55,480	56,510	16
17	54,570	54,700	54,830	54,960	55,090	55,220	55,340	55,470	55,600	55,730	55,860	56,170	56,640	57,210	57,870	58,600	59,400	60,260	61,190	62,160	63,200	17
18	61,130	61,270	61,400	61,540	61,670	61,810	61,940	62,080	62,220	62,350	62,490	62,810	63,280	63,860	64,520	65,260	66,060	66,930	67,860	68,840	69,880	18
19	67,690	67,830	67,980	68,120	68,260	68,400	68,550	68,690	68,830	68,970	69,110	69,440	69,920	70,500	71,170	71,910	72,720	73,600	74,530	75,520	76,570	19
20	73,760	73,910	74,060	74,210	74,350	74,500	74,650	74,790	74,940	75,090	75,230	75,560	76,050	76,640	77,310	78,060	78,870	79,750	80,690	81,680	82,730	20
21	79,830	79,980	80,140	80,290	80,450	80,600	80,750	80,900	81,050	81,210	81,360	81,690	82,180	82,770	83,450	84,200	85,020	85,900	86,840	87,840	88,890	21
22	85,900	86,060	86,220	86,380	86,540	86,700	86,850	87,010	87,170	87,320	87,480	87,820	88,310	88,910	89,590	90,350	91,170	92,050	93,000	94,000	95,050	22
23	91,530	91,690	91,850	92,010	92,170	92,330	92,490	92,640	92,800	92,960	93,110	93,450	93,940	94,540	95,220	95,980	96,800	97,680	98,630	99,630	100,700	23
24	97,170	97,330	97,490	97,650	97,800	97,960	98,120	98,280	98,430	98,590	98,740	99,080	99,580	100,200	100,900	101,600	102,400	103,300	104,300	105,300	106,300	24
25	102,800	103,000	103,100	103,300	103,400	103,600	103,800	103,900	104,100	104,200	104,400	104,700	105,200	105,800	106,500	107,200	108,100	108,900	109,900	110,900	111,900	25
26	108,800	108,900	109,000	109,100	109,300	109,400	109,500	109,600	109,700	109,800	109,900	110,200	110,600	111,200	111,800	112,500	113,300	114,100	115,000	116,000	117,000	26
27	114,800	114,900	114,900	115,000	115,100	115,100	115,200	115,200	115,300	115,400	115,400	115,700	116,100	116,600	117,200	117,800	118,500	119,300	120,200	121,100	122,100	27
28	120,800	120,800	120,900	120,900	120,900	120,900	120,900	120,900	120,900	120,900	120,900	121,100	121,500	121,900	122,500	123,100	123,800	124,500	125,300	126,200	127,100	28

GATE ARRANGEMENT	HEADWATER ELEVATION																				GATE ARRANGEMENT
	818.0	818.1	818.2	818.3	818.4	818.5	818.6	818.7	818.8	818.9	819.0	819.1	819.2	819.3	819.4	819.5	819.6	819.7	819.8	819.9	820.0	
1																						1
2																						2
3																						3
4																						4
5	20,230	21,220	22,260	23,350	24,490																	5
6	22,980	23,980	25,020	26,120	27,260	28,450	29,680	30,960	32,280	33,640	35,050	36,490										6
7	26,170	27,170	28,220	29,330	30,480	31,670	32,910	34,200	35,530	36,900	38,310	39,770	41,260	42,790	44,370	45,980	47,630	49,320	51,050			7
8	29,290	30,300	31,370	32,480	33,640	34,840	36,090	37,380	38,720	40,100	41,520	42,990	44,490	46,030	47,620	49,240	50,900	52,600	54,330	56,110	57,920	8
9	32,400	33,420	34,490	35,600	36,770	37,980	39,230	40,530	41,870	43,250	44,680	46,150	47,660	49,200	50,790	52,420	54,080	55,790	57,530	59,300	61,120	9
10	35,460	36,480	37,550	38,670	39,840	41,050	42,310	43,610	44,960	46,350	47,780	49,250	50,760	52,310	53,900	55,530	57,200	58,910	60,650	62,430	64,250	10
11	38,460	39,490	40,560	41,690	42,860	44,080	45,340	46,640	47,990	49,390	50,820	52,300	53,810	55,370	56,970	58,600	60,270	61,980	63,730	65,520	67,340	11
12	41,970	43,000	44,090	45,220	46,400	47,630	48,900	50,220	51,580	52,980	54,420	55,910	57,440	59,000	60,610	62,250	63,930	65,660	67,410	69,210	71,040	12
13	45,550	46,590	47,690	48,830	50,020	51,260	52,540	53,870	55,240	56,650	58,110	59,600	61,140	62,720	64,330	65,990	67,680	69,410	71,180	72,990	74,830	13
14	49,120	50,180	51,280	52,430	53,630	54,880	56,170	57,510	58,890	60,310	61,770	63,280	64,820	66,410	68,030	69,700	71,400	73,140	74,920	76,730	78,580	14
15	52,800	53,860	54,980	56,140	57,350	58,610	59,910	61,260	62,650	64,080	65,560	67,070	68,630	70,220	71,860	73,530	75,250	77,000	78,790	80,620	82,480	15
16	56,510	57,590	58,720	59,900	61,120	62,390	63,710	65,070	66,470	67,920	69,410	70,940	72,510	74,120	75,770	77,460	79,190	80,960	82,760	84,600	86,480	16
17	63,200	64,280	65,410	66,600	67,830	69,100	70,430	71,790	73,200	74,660	76,150	77,690	79,260	80,880	82,530	84,230	85,960	87,730	89,540	91,390	93,270	17
18	69,880	70,970	72,110	73,300	74,540	75,820	77,150	78,520	79,930	81,390	82,890	84,430	86,010	87,630	89,290	90,990	92,730	94,510	96,320	98,170	100,100	18
19	76,570	77,660	78,810	80,000	81,240	82,530	83,860	85,240	86,660	88,120	89,630	91,170	92,760	94,390	96,050	97,760	99,500	101,300	103,100	105,000	106,800	19
20	82,730	83,830	84,980	86,170	87,420	88,710	90,040	91,420	92,850	94,310	95,820	97,370	98,960	100,600	102,300	104,000	105,700	107,500	109,300	111,200	113,100	20
21	88,890	89,990	91,150	92,350	93,590	94,890	96,230	97,610	99,030	100,500	102,000	103,600	105,200	106,800	108,500	110,200	111,900	113,700	115,500	117,400	119,300	21
22	95,050	96,160	97,310	98,520	99,770	101,100	102,400	103,800	105,200	106,700	108,200	109,800	111,300	113,000	114,700	116,400	118,100	119,900	121,700	123,600	125,500	22
23	100,700	101,800	103,000	104,200	105,400	106,700	108,100	109,500	110,900	112,400	113,900	115,500	117,100	118,700	120,400	122,100	123,800	125,600	127,500	129,300	131,200	23
24	106,300	107,400	108,600	109,800	111,100	112,400	113,700	115,100	116,600	118,100	119,600	121,200	122,800	124,400	126,100	127,800	129,600	131,400	133,200	135,100	137,000	24
25	111,900	113,100	114,200	115,500	116,700	118,100	119,400	120,800	122,300	123,800	125,300	126,900	128,500	130,100	131,800	133,600	135,300	137,100	139,000	140,900	142,800	25
26	117,000	118,100	119,300	120,600	121,800	123,200	124,600	126,000	127,400	128,900	130,500	132,100	133,700	135,400	137,100	138,800	140,600	142,400	144,300	146,200	148,100	26
27	122,100	123,200	124,400	125,700	127,000	128,300	129,700	131,100	132,600	134,100	135,700	137,300	138,900	140,600	142,300	144,100	145,800	147,700	149,500	151,500	153,400	27
28	127,100	128,300	129,500	130,800	132,100	133,400	134,800	136,300	137,800	139,300	140,900	142,500	144,100	145,800	147,500	149,300	151,100	153,000	154,800	156,800	158,700	28

HEADWATER 816 to 820
TAILWATER 795.51 to 796.5

See special instruction for preventing gate overflow on page 2.

MAY 2008

TELLICO DAM
SPILLWAY DISCHARGE
IN CUBIC FEET PER SECOND

GATE ARRANGEMENT	HEADWATER ELEVATION																				GATE ARRANGEMENT
	800.0	800.1	800.2	800.3	800.4	800.5	800.6	800.7	800.8	800.9	801.0	801.1	801.2	801.3	801.4	801.5	801.6	801.7	801.8	801.9	802.0	
1	900	920	930	950	960	980	990	1,000	1,020	1,030	1,040	1,060	1,070	1,080	1,090	1,110	1,120	1,130	1,140	1,150	1,170	1
2	1,940	1,970	2,010	2,040	2,070	2,100	2,130	2,160	2,190	2,220	2,240	2,270	2,300	2,330	2,350	2,380	2,410	2,430	2,460	2,480	2,510	2
3	2,990	3,040	3,090	3,140	3,190	3,230	3,280	3,320	3,370	3,410	3,460	3,500	3,540	3,580	3,620	3,660	3,710	3,750	3,780	3,820	3,860	3
4	3,480	3,570	3,660	3,750	3,830	3,920	4,000	4,080	4,160	4,240	4,320	4,400	4,470	4,550	4,620	4,700	4,770	4,840	4,910	4,980	5,040	4
5	4,720	4,810	4,890	4,980	5,060	5,150	5,240	5,320	5,410	5,490	5,580	5,670	5,750	5,840	5,920	6,010	6,090	6,180	6,260	6,350	6,430	5
6	6,010	6,100	6,190	6,280	6,370	6,460	6,550	6,640	6,730	6,820	6,910	7,000	7,090	7,180	7,270	7,360	7,450	7,540	7,630	7,720	7,810	6
7	7,240	7,350	7,450	7,550	7,650	7,750	7,860	7,960	8,060	8,160	8,270	8,370	8,470	8,580	8,680	8,780	8,880	8,990	9,090	9,190	9,290	7
8	8,480	8,590	8,710	8,820	8,930	9,040	9,160	9,270	9,380	9,500	9,610	9,720	9,840	9,950	10,060	10,180	10,290	10,400	10,520	10,630	10,740	8
9	9,730	9,850	9,980	10,110	10,230	10,360	10,490	10,620	10,750	10,880	11,000	11,130	11,260	11,390	11,520	11,650	11,780	11,900	12,030	12,160	12,290	9
10	10,970	11,110	11,250	11,390	11,540	11,680	11,820	11,960	12,110	12,250	12,390	12,540	12,680	12,820	12,960	13,110	13,250	13,390	13,540	13,680	13,820	10
11	12,220	12,370	12,530	12,680	12,840	13,000	13,150	13,310	13,470	13,630	13,780	13,940	14,100	14,260	14,410	14,570	14,730	14,890	15,040	15,200	15,360	11
12	13,620	13,800	13,970	14,140	14,310	14,490	14,660	14,830	15,010	15,180	15,360	15,530	15,710	15,880	16,060	16,230	16,400	16,580	16,750	16,920	17,100	12
13	15,050	15,240	15,430	15,620	15,810	16,000	16,190	16,380	16,570	16,770	16,960	17,150	17,340	17,530	17,720	17,920	18,110	18,300	18,490	18,680	18,870	13
14	16,490	16,690	16,900	17,110	17,310	17,520	17,730	17,930	18,140	18,350	18,560	18,770	18,980	19,190	19,390	19,600	19,810	20,020	20,230	20,430	20,640	14
15	17,960	18,180	18,400	18,630	18,850	19,070	19,300	19,520	19,750	19,970	20,200	20,430	20,650	20,880	21,100	21,330	21,550	21,780	22,000	22,230	22,450	15
16	19,430	19,670	19,910	20,150	20,390	20,630	20,870	21,110	21,350	21,590	21,840	22,080	22,320	22,560	22,810	23,050	23,290	23,530	23,770	24,010	24,250	16
17	22,750	23,020	23,290	23,550	23,820	24,090	24,360	24,630	24,900	25,170	25,440	25,710	25,980	26,260	26,530	26,800	27,070	27,340	27,610	27,880	28,150	17
18	26,080	26,370	26,670	26,960	27,260	27,560	27,850	28,150	28,450	28,750	29,050	29,350	29,650	29,950	30,250	30,550	30,840	31,140	31,440	31,740	32,040	18
19	29,400	29,720	30,050	30,370	30,690	31,020	31,350	31,670	32,000	32,330	32,650	32,980	33,310	33,640	33,970	34,290	34,620	34,950	35,280	35,600	35,930	19
20	33,640	34,100	34,550	35,000	35,450	35,890	36,330	36,770	37,210	37,650	38,080	38,510	38,940	39,370	39,790	40,210	40,630	41,050	41,470	41,880	42,290	20
21	37,880	38,470	39,050	39,630	40,200	40,760	41,320	41,880	42,430	42,970	43,510	44,040	44,570	45,100	45,620	46,140	46,650	47,160	47,660	48,160	48,660	21
22	42,120	42,840	43,550	44,260	44,950	45,640	46,310	46,980	47,640	48,290	48,940	49,570	50,200	50,830	51,450	52,060	52,660	53,260	53,850	54,440	55,020	22
23	42,120	42,840	43,550	44,260	44,950	45,640	46,310	46,980	47,640	48,290	48,940	49,570	50,200	50,830	51,450	52,060	52,660	53,260	53,850	54,440	55,020	23
24	42,120	42,840	43,550	44,260	44,950	45,640	46,310	46,980	47,640	48,290	48,940	49,570	50,200	50,830	51,450	52,060	52,660	53,260	53,850	54,440	55,020	24
25	42,120	42,840	43,550	44,260	44,950	45,640	46,310	46,980	47,640	48,290	48,940	49,570	50,200	50,830	51,450	52,060	52,660	53,260	53,850	54,440	55,020	25
26	42,120	42,840	43,550	44,260	44,950	45,640	46,310	46,980	47,640	48,290	48,940	49,570	50,200	50,830	51,450	52,060	52,660	53,260	53,850	54,440	55,020	26
27	42,120	42,840	43,550	44,260	44,950	45,640	46,310	46,980	47,640	48,290	48,940	49,570	50,200	50,830	51,450	52,060	52,660	53,260	53,850	54,440	55,020	27
28	42,120	42,840	43,550	44,260	44,950	45,640	46,310	46,980	47,640	48,290	48,940	49,570	50,200	50,830	51,450	52,060	52,660	53,260	53,850	54,440	55,020	28

GATE ARRANGEMENT	HEADWATER ELEVATION																				GATE ARRANGEMENT
	802.0	802.1	802.2	802.3	802.4	802.5	802.6	802.7	802.8	802.9	803.0	803.1	803.2	803.3	803.4	803.5	803.6	803.7	803.8	803.9	804.0	
1	1,170	1,180	1,190	1,200	1,210	1,220	1,230	1,250	1,260	1,270	1,280	1,290	1,300	1,310	1,320	1,330	1,340	1,350	1,360	1,370	1,380	1
2	2,510	2,530	2,560	2,580	2,610	2,630	2,650	2,680	2,700	2,720	2,750	2,770	2,790	2,820	2,840	2,860	2,880	2,900	2,920	2,950	2,970	2
3	3,860	3,900	3,940	3,980	4,010	4,050	4,090	4,120	4,160	4,200	4,230	4,270	4,300	4,340	4,370	4,400	4,440	4,470	4,500	4,540	4,570	3
4	5,040	5,110	5,170	5,240	5,300	5,360	5,420	5,490	5,540	5,600	5,660	5,720	5,770	5,830	5,880	5,940	5,990	6,040	6,090	6,140	6,190	4
5	6,430	6,510	6,600	6,680	6,760	6,840	6,920	7,000	7,080	7,160	7,230	7,310	7,390	7,460	7,530	7,610	7,680	7,750	7,820	7,880	7,950	5
6	7,810	7,900	7,990	8,070	8,160	8,250	8,330	8,420	8,500	8,590	8,670	8,750	8,840	8,920	9,000	9,080	9,160	9,230	9,310	9,390	9,460	6
7	9,290	9,390	9,490	9,590	9,690	9,790	9,890	9,990	10,090	10,180	10,280	10,370	10,470	10,560	10,660	10,750	10,840	10,930	11,020	11,110	11,200	7
8	10,740	10,850	10,970	11,080	11,190	11,300	11,410	11,520	11,630	11,740	11,840	11,950	12,060	12,160	12,270	12,370	12,470	12,580	12,680	12,780	12,880	8
9	12,290	12,410	12,540	12,670	12,790	12,920	13,040	13,170	13,290	13,410	13,530	13,660	13,780	13,900	14,010	14,130	14,250	14,360	14,480	14,590	14,700	9
10	13,820	13,960	14,100	14,240	14,380	14,520	14,660	14,800	14,940	15,070	15,210	15,350	15,480	15,610	15,750	15,880	16,010	16,140	16,260	16,390	16,520	10
11	15,360	15,510	15,670	15,820	15,980	16,130	16,290	16,440	16,590	16,740	16,890	17,040	17,190	17,330	17,480	17,620	17,770	17,910	18,050	18,190	18,330	11
12	17,100	17,270	17,440	17,610	17,780	17,950	18,120	18,290	18,460	18,620	18,790	18,950	19,120	19,280	19,440	19,600	19,760	19,920	20,070	20,220	20,380	12
13	18,870	19,060	19,250	19,430	19,620	19,810	19,990	20,180	20,360	20,540	20,730	20,910	21,080	21,260	21,440	21,610	21,790	21,960	22,130	22,300	22,460	13
14	20,640	20,840	21,050	21,250	21,460	21,660	21,860	22,060	22,260	22,460	22,660	22,860	23,050	23,240	23,440	23,630	23,810	24,000	24,190	24,370	24,550	14
15	22,450	22,670	22,900	23,120	23,340	23,560	23,780	23,990	24,210	24,420	24,640	24,850	25,060	25,270	25,480	25,680	25,890	26,090	26,290	26,490	26,680	15
16	24,250	24,490	24,730	24,970	25,210	25,440	25,680	25,910	26,140	26,380	26,600	26,830	27,060	27,280	27,510	27,730	27,950	28,160	28,380	28,590	28,800	16
17	28,150	28,410	28,680	28,950	29,210	29,480	29,740	30,000	30,260	30,520	30,780	31,030	31,290	31,540	31,790	32,040	32,290	32,530	32,770	33,010	33,250	17
18	32,040	32,330	32,630	32,920	33,220	33,510	33,800	34,090	34,380	34,670	34,950	35,240	35,520	35,800	36,080	36,350	36,620	36,900	37,170	37,430	37,700	18
19	35,930	36,250	36,580	36,900	37,220	37,540	37,860	38,180	38,500	38,810	39,120	39,440	39,750	40,050	40,360	40,660	40,960	41,260	41,560	41,850	42,140	19
20	42,290	42,700	43,110	43,510	43,910	44,310	44,710	45,110	45,500	45,890	46,280	46,670	47,050	47,430	47,810	48,080	48,350	48,610	48,870	49,130	49,380	20
21	48,660	49,150	49,640	50,130	50,610	51,090	51,560	52,040	52,500	52,970	53,430	53,890	54,350	54,810	55,260	55,500	55,730	55,950	56,180	56,400	56,620	21
22	55,020	55,600	56,170	56,740	57,300	57,860	58,410	58,960	59,510	60,050	60,590	61,120	61,650	62,180	62,710	62,920	63,110	63,300	63,490	63,670	63,860	22
23	55,020	55,600	56,170	56,740	57,300	57,860	58,410	58,960	59,510	60,050	60,590	61,120	61,650	62,180	62,710	63,020	63,320	63,620	63,920	64,210	64,500	23
24	55,020	55,600	56,170	56,740	57,300	57,860	58,410	58,960	59,510	60,050	60,590	61,120	61,650	62,180	62,710	63,130	63,530	63,940	64,340	64,750	65,150	24
25	55,020	55,600	56,170	56,740	57,300	57,860	58,410	58,960	59,510	60,050	60,590	61,120	61,650	62,180	62,710	63,230	63,750	64,260	64,770	65,280	65,790	25
26	55,020	55,600	56,170	56,740	57,300	57,860	58,410	58,960	59,510	60,050	60,590	61,120	61,650	62,180	62,710	63,230	63,750	64,260	64,770	65,280	65,790	26
27	55,020	55,600	56,170	56,740	57,300	57,860	58,410	58,960	59,510	60,050	60,590	61,120	61,650	62,180	62,710	63,230	63,750	64,260	64,770	65,280	65,790	27
28	55,020	55,600	56,170	56,740	57,300	57,860	58,410	58,960	59,510	60,050	60,590	61,120	61,650	62,180	62,710	63,230	63,750	64,260	64,770	65,280	65,790	28

MAY 2008

HEADWATER 800 to 804
TAILWATER 796.51 to 797.5

TELLICO DAM
SPILLWAY DISCHARGE
IN CUBIC FEET PER SECOND

GATE ARRANGEMENT	HEADWATER ELEVATION																				GATE ARRANGEMENT
	804.0	804.1	804.2	804.3	804.4	804.5	804.6	804.7	804.8	804.9	805.0	805.1	805.2	805.3	805.4	805.5	805.6	805.7	805.8	805.9	806.0	
1	1,380	1,390	1,400	1,410	1,420	1,430	1,440	1,450	1,460	1,470	1,480	1,480	1,490	1,500	1,510	1,520	1,530	1,540	1,550	1,560	1,560	1
2	2,970	2,990	3,010	3,030	3,050	3,070	3,090	3,110	3,130	3,150	3,170	3,190	3,210	3,230	3,250	3,270	3,290	3,310	3,330	3,350	3,360	2
3	4,570	4,600	4,640	4,670	4,700	4,730	4,760	4,790	4,820	4,860	4,890	4,920	4,950	4,980	5,010	5,040	5,070	5,100	5,120	5,150	5,180	3
4	6,190	6,240	6,290	6,330	6,380	6,430	6,470	6,520	6,560	6,600	6,650	6,690	6,730	6,770	6,810	6,850	6,890	6,930	6,970	7,010	7,050	4
5	7,950	8,020	8,080	8,140	8,200	8,260	8,320	8,380	8,440	8,500	8,550	8,600	8,660	8,710	8,760	8,810	8,860	8,910	8,960	9,010	9,050	5
6	9,460	9,540	9,610	9,680	9,750	9,820	9,890	9,960	10,020	10,090	10,160	10,220	10,280	10,350	10,410	10,470	10,530	10,590	10,650	10,710	10,770	6
7	11,200	11,280	11,370	11,450	11,530	11,620	11,700	11,780	11,860	11,930	12,010	12,090	12,160	12,240	12,310	12,380	12,460	12,530	12,600	12,670	12,740	7
8	12,880	12,970	13,070	13,170	13,260	13,360	13,450	13,540	13,630	13,720	13,810	13,900	13,990	14,080	14,160	14,250	14,330	14,410	14,500	14,580	14,660	8
9	14,700	14,820	14,930	15,030	15,140	15,250	15,350	15,460	15,560	15,660	15,760	15,860	15,960	16,060	16,160	16,260	16,350	16,450	16,540	16,630	16,720	9
10	16,520	16,640	16,760	16,890	17,010	17,130	17,240	17,360	17,480	17,590	17,700	17,820	17,930	18,040	18,150	18,260	18,360	18,470	18,570	18,680	18,780	10
11	18,330	18,460	18,600	18,730	18,870	19,000	19,130	19,250	19,380	19,510	19,630	19,750	19,880	20,000	20,120	20,240	20,350	20,470	20,590	20,700	20,810	11
12	20,380	20,530	20,680	20,820	20,970	21,110	21,260	21,400	21,540	21,670	21,810	21,950	22,080	22,210	22,350	22,480	22,600	22,730	22,860	22,990	23,110	12
13	22,460	22,630	22,790	22,950	23,110	23,270	23,420	23,580	23,730	23,880	24,030	24,180	24,320	24,470	24,610	24,750	24,890	25,030	25,170	25,310	25,440	13
14	24,550	24,730	24,910	25,080	25,260	25,430	25,600	25,760	25,930	26,090	26,260	26,420	26,580	26,730	26,890	27,040	27,200	27,350	27,500	27,650	27,790	14
15	26,680	26,870	27,070	27,250	27,440	27,630	27,810	27,990	28,170	28,340	28,520	28,690	28,860	29,030	29,200	29,370	29,530	29,690	29,850	30,010	30,170	15
16	28,800	29,010	29,210	29,420	29,620	29,820	30,010	30,210	30,400	30,590	30,780	30,960	31,150	31,330	31,510	31,690	31,860	32,040	32,210	32,380	32,550	16
17	33,250	33,480	33,710	33,940	34,170	34,390	34,620	34,840	35,050	35,270	35,480	35,690	35,900	36,110	36,310	36,510	36,710	36,910	37,110	37,300	37,490	17
18	37,700	37,960	38,210	38,470	38,720	38,970	39,220	39,470	39,710	39,950	40,190	40,420	40,650	40,880	41,110	41,340	41,560	41,780	42,000	42,220	42,440	18
19	42,140	42,430	42,710	43,000	43,270	43,550	43,820	44,090	44,360	44,630	44,890	45,150	45,410	45,660	45,920	46,170	46,410	46,660	46,900	47,140	47,380	19
20	49,380	49,630	49,890	50,140	50,380	50,630	50,870	51,110	51,350	51,590	51,820	52,050	52,280	52,510	52,740	52,960	53,190	53,410	53,630	53,850	54,060	20
21	56,620	56,840	57,060	57,270	57,490	57,700	57,910	58,130	58,330	58,540	58,750	58,960	59,160	59,360	59,560	59,760	59,960	60,160	60,360	60,550	60,750	21
22	63,860	64,050	64,230	64,410	64,600	64,780	64,960	65,140	65,320	65,500	65,680	65,860	66,030	66,210	66,390	66,560	66,740	66,910	67,090	67,260	67,430	22
23	64,500	64,790	65,090	65,370	65,660	65,950	66,230	66,520	66,800	67,080	67,360	67,640	67,920	68,200	68,480	68,750	69,030	69,300	69,580	69,850	70,120	23
24	65,150	65,540	65,940	66,330	66,730	67,120	67,510	67,900	68,280	68,670	69,050	69,430	69,810	70,190	70,570	70,950	71,320	71,700	72,070	72,440	72,810	24
25	65,790	66,290	66,800	67,300	67,790	68,290	68,780	69,270	69,760	70,250	70,730	71,220	71,700	72,180	72,660	73,140	73,610	74,090	74,560	75,030	75,500	25
26	65,790	66,290	66,800	67,300	67,790	68,290	68,780	69,270	69,760	70,250	70,730	71,220	71,700	72,180	72,660	73,140	73,610	74,090	74,560	75,030	75,500	26
27	65,790	66,290	66,800	67,300	67,790	68,290	68,780	69,270	69,760	70,250	70,730	71,220	71,700	72,180	72,660	73,140	73,610	74,090	74,560	75,030	75,500	27
28	65,790	66,290	66,800	67,300	67,790	68,290	68,780	69,270	69,760	70,250	70,730	71,220	71,700	72,180	72,660	73,140	73,610	74,090	74,560	75,030	75,500	28

GATE ARRANGEMENT	HEADWATER ELEVATION																				GATE ARRANGEMENT
	806.0	806.1	806.2	806.3	806.4	806.5	806.6	806.7	806.8	806.9	807.0	807.1	807.2	807.3	807.4	807.5	807.6	807.7	807.8	807.9	808.0	
1	1,560	1,570	1,580	1,590	1,600	1,610	1,620	1,620	1,630	1,640	1,650	1,660	1,670	1,670	1,680	1,690	1,700	1,710	1,710	1,720	1,730	1
2	3,360	3,380	3,400	3,420	3,440	3,460	3,480	3,490	3,510	3,530	3,550	3,560	3,580	3,600	3,620	3,630	3,650	3,670	3,690	3,700	3,720	2
3	5,180	5,210	5,240	5,270	5,300	5,320	5,350	5,380	5,410	5,440	5,460	5,490	5,520	5,540	5,570	5,600	5,620	5,650	5,680	5,700	5,730	3
4	7,050	7,080	7,120	7,160	7,190	7,230	7,260	7,300	7,330	7,370	7,400	7,440	7,470	7,500	7,540	7,570	7,600	7,630	7,660	7,700	7,730	4
5	9,050	9,100	9,140	9,190	9,230	9,280	9,320	9,370	9,410	9,450	9,490	9,530	9,580	9,620	9,660	9,700	9,740	9,780	9,830	9,870	9,910	5
6	10,770	10,820	10,880	10,940	10,990	11,050	11,100	11,160	11,210	11,270	11,320	11,370	11,430	11,480	11,530	11,590	11,640	11,690	11,740	11,800	11,850	6
7	12,740	12,810	12,880	12,940	13,010	13,080	13,140	13,210	13,280	13,340	13,410	13,470	13,530	13,600	13,660	13,730	13,790	13,850	13,910	13,980	14,040	7
8	14,660	14,740	14,820	14,900	14,980	15,060	15,140	15,220	15,290	15,370	15,440	15,520	15,600	15,670	15,740	15,820	15,890	15,970	16,040	16,110	16,190	8
9	16,720	16,820	16,910	17,000	17,090	17,180	17,260	17,350	17,440	17,530	17,610	17,700	17,780	17,870	17,950	18,040	18,120	18,200	18,290	18,370	18,450	9
10	18,780	18,880	18,990	19,090	19,190	19,290	19,390	19,490	19,580	19,680	19,780	19,870	19,970	20,060	20,160	20,250	20,350	20,440	20,530	20,630	20,720	10
11	20,810	20,930	21,040	21,150	21,260	21,370	21,480	21,590	21,690	21,800	21,910	22,010	22,120	22,220	22,330	22,430	22,530	22,640	22,740	22,840	22,940	11
12	23,110	23,230	23,360	23,480	23,600	23,720	23,840	23,960	24,070	24,190	24,310	24,420	24,540	24,650	24,760	24,880	24,990	25,100	25,220	25,330	25,440	12
13	25,440	25,580	25,710	25,840	25,970	26,100	26,230	26,360	26,490	26,620	26,740	26,870	26,990	27,120	27,240	27,360	27,490	27,610	27,730	27,850	27,970	13
14	27,790	27,940	28,080	28,230	28,370	28,510	28,650	28,790	28,930	29,070	29,200	29,340	29,480	29,610	29,750	29,880	30,010	30,140	30,280	30,410	30,540	14
15	30,170	30,330	30,490	30,640	30,790	30,940	31,100	31,250	31,390	31,540	31,690	31,830	31,980	32,120	32,270	32,410	32,550	32,690	32,830	32,980	33,120	15
16	32,550	32,720	32,890	33,050	33,220	33,380	33,540	33,700	33,860	34,020	34,180	34,330	34,490	34,640	34,800	34,950	35,100	35,260	35,410	35,560	35,710	16
17	37,490	37,690	37,870	38,060	38,250	38,430	38,620	38,800	38,980	39,160	39,340	39,510	39,690	39,860	40,040	40,210	40,380	40,550	40,720	40,890	41,060	17
18	42,440	42,650	42,860	43,070	43,280	43,490	43,690	43,890	44,100	44,300	44,490	44,690	44,890	45,080	45,270	45,460	45,650	45,840	46,030	46,220	46,400	18
19	47,380	47,620	47,850	48,080	48,310	48,540	48,770	48,990	49,210	49,430	49,650	49,870	50,080	50,300	50,510	50,720	50,930	51,140	51,340	51,550	51,750	19
20	54,060	54,280	54,490	54,700	54,910	55,120	55,330	55,530	55,740	55,940	56,140	56,340	56,540	56,740	56,940	57,130	57,330	57,520	57,710	57,900	58,090	20
21	60,750	60,940	61,130	61,320	61,510	61,700	61,890	62,080	62,260	62,450	62,630	62,820	63,000	63,180	63,360	63,540	63,720	63,900	64,080	64,260	64,440	21
22	67,430	67,600	67,770	67,950	68,120	68,290	68,450	68,620	68,790	68,960	69,130	69,290	69,460	69,630	69,790	69,960	70,120	70,290	70,450	70,620	70,780	22
23	70,120	70,390	70,660	70,930	71,200	71,470	71,740	72,000	72,270	72,540	72,800	73,070	73,330	73,590	73,860	74,120	74,380	74,640	74,900	75,170	75,430	23
24	72,810	73,180	73,550	73,920	74,290	74,650	75,020	75,380	75,750	76,110	76,480	76,840	77,200	77,560	77,920	78,280	78,640	79,000	79,360	79,720	80,070	24
25	75,500	75,970	76,440	76,910	77,370	77,840	78,300	78,770	79,230	79,690	80,150	80,610	81,070	81,530	81,990	82,440	82,900	83,360	83,810	84,270	84,720	25
26	75,500	75,970	76,440	76,910	77,370	77,840	78,300	78,770	79,230	79,690	80,150	80,610	81,070	81,530	81,990	82,440	82,900	83,360	83,810	84,270	84,720	26
27	75,500	75,970	76,440	76,910	77,370	77,840	78,300	78,770	79,230	79,690	80,150	80,610	81,070	81,530	81,990	82,440	82,900	83,360	83,810	84,270	84,720	27
28	75,500	75,970	76,440	76,910	77,370	77,840	78,300	78,770	79,230	79,690	80,150	80,610	81,070	81,530	81,990	82,440	82,900	83,360	83,810	84,270	84,720	28

HEADWATER 804 to 808
TAILWATER 796.51 to 797.5

MAY 2008

TELLICO DAM
SPILLWAY DISCHARGE
IN CUBIC FEET PER SECOND

HEADWATER ELEVATION

GATE ARRANGEMENT	808.0	808.1	808.2	808.3	808.4	808.5	808.6	808.7	808.8	808.9	809.0	809.1	809.2	809.3	809.4	809.5	809.6	809.7	809.8	809.9	810.0	GATE ARRANGEMENT
1	1,730	1,740	1,750	1,750	1,760	1,770	1,780	1,780	1,790	1,800	1,810	1,810	1,820	1,830	1,840	1,840	1,850	1,860	1,870	1,870	1,880	1
2	3,720	3,740	3,750	3,770	3,790	3,800	3,820	3,840	3,850	3,870	3,890	3,900	3,920	3,930	3,950	3,970	3,980	4,000	4,010	4,030	4,040	2
3	5,730	5,760	5,780	5,810	5,830	5,860	5,880	5,910	5,930	5,960	5,980	6,010	6,030	6,060	6,080	6,110	6,130	6,160	6,180	6,200	6,230	3
4	7,730	7,760	7,790	7,820	7,850	7,880	7,910	7,940	7,970	8,000	8,030	8,060	8,090	8,120	8,150	8,180	8,210	8,240	8,270	8,300	8,330	4
5	9,910	9,950	9,990	10,030	10,080	10,120	10,160	10,200	10,250	10,290	10,330	10,370	10,420	10,460	10,500	10,550	10,590	10,630	10,680	10,720	10,760	5
6	11,850	11,900	11,950	12,010	12,060	12,110	12,170	12,220	12,270	12,320	12,380	12,430	12,480	12,540	12,590	12,640	12,690	12,750	12,800	12,850	12,900	6
7	14,040	14,100	14,170	14,230	14,290	14,350	14,420	14,480	14,540	14,600	14,670	14,730	14,790	14,850	14,920	14,980	15,040	15,100	15,160	15,220	15,290	7
8	16,190	16,260	16,330	16,400	16,480	16,550	16,620	16,690	16,760	16,830	16,910	16,980	17,050	17,120	17,190	17,260	17,330	17,400	17,470	17,540	17,610	8
9	18,450	18,530	18,620	18,700	18,780	18,860	18,940	19,030	19,110	19,190	19,270	19,350	19,430	19,510	19,590	19,670	19,750	19,830	19,910	19,990	20,070	9
10	20,720	20,810	20,900	21,000	21,090	21,180	21,270	21,360	21,450	21,540	21,630	21,720	21,810	21,900	21,990	22,080	22,170	22,260	22,350	22,440	22,530	10
11	22,940	23,050	23,150	23,250	23,350	23,450	23,550	23,650	23,760	23,860	23,960	24,060	24,160	24,250	24,350	24,450	24,550	24,650	24,750	24,850	24,940	11
12	25,440	25,550	25,660	25,770	25,880	25,990	26,100	26,210	26,320	26,430	26,540	26,650	26,760	26,870	26,980	27,090	27,190	27,300	27,410	27,520	27,620	12
13	27,970	28,090	28,210	28,330	28,450	28,570	28,690	28,810	28,930	29,050	29,170	29,290	29,400	29,520	29,640	29,760	29,870	29,990	30,110	30,220	30,340	13
14	30,540	30,670	30,800	30,930	31,060	31,190	31,320	31,450	31,580	31,710	31,840	31,960	32,090	32,220	32,350	32,470	32,600	32,730	32,850	32,980	33,100	14
15	33,120	33,260	33,400	33,530	33,670	33,810	33,950	34,090	34,230	34,360	34,500	34,640	34,770	34,910	35,050	35,180	35,320	35,450	35,590	35,720	35,850	15
16	35,710	35,860	36,010	36,160	36,310	36,460	36,610	36,750	36,900	37,050	37,200	37,340	37,490	37,640	37,780	37,930	38,070	38,220	38,360	38,500	38,650	16
17	41,060	41,220	41,390	41,560	41,720	41,890	42,050	42,220	42,380	42,540	42,710	42,870	43,030	43,190	43,350	43,510	43,670	43,820	43,980	44,140	44,290	17
18	46,400	46,590	46,770	46,960	47,140	47,320	47,500	47,680	47,860	48,040	48,210	48,390	48,570	48,740	48,910	49,090	49,260	49,430	49,600	49,770	49,940	18
19	51,750	51,950	52,160	52,360	52,550	52,750	52,950	53,140	53,340	53,530	53,720	53,920	54,100	54,290	54,480	54,670	54,850	55,040	55,220	55,400	55,590	19
20	58,090	58,280	58,470	58,660	58,850	59,030	59,220	59,400	59,590	59,770	59,950	60,140	60,320	60,500	60,680	60,860	61,030	61,210	61,390	61,560	61,740	20
21	64,440	64,610	64,790	64,970	65,140	65,320	65,490	65,660	65,840	66,010	66,180	66,360	66,530	66,700	66,870	67,040	67,210	67,380	67,550	67,720	67,890	21
22	70,780	70,940	71,110	71,270	71,430	71,600	71,760	71,920	72,090	72,250	72,410	72,580	72,740	72,900	73,070	73,230	73,390	73,560	73,720	73,880	74,050	22
23	75,430	75,690	75,950	76,210	76,470	76,730	76,990	77,250	77,510	77,760	78,020	78,280	78,540	78,800	79,060	79,320	79,580	79,840	80,100	80,350	80,610	23
24	80,070	80,430	80,790	81,150	81,500	81,860	82,210	82,570	82,920	83,280	83,630	83,990	84,340	84,700	85,050	85,410	85,760	86,120	86,470	86,830	87,180	24
25	84,720	85,180	85,630	86,080	86,540	86,990	87,440	87,890	88,340	88,790	89,250	89,700	90,150	90,600	91,050	91,500	91,950	92,400	92,850	93,300	93,740	25
26	84,720	85,180	85,630	86,080	86,540	86,990	87,440	87,890	88,340	88,790	89,250	89,700	90,150	90,600	91,050	91,500	91,950	92,400	92,850	93,300	93,740	26
27	84,720	85,180	85,630	86,080	86,540	86,990	87,440	87,890	88,340	88,790	89,250	89,700	90,150	90,600	91,050	91,500	91,950	92,400	92,850	93,300	93,740	27
28	84,720	85,180	85,630	86,080	86,540	86,990	87,440	87,890	88,340	88,790	89,250	89,700	90,150	90,600	91,050	91,500	91,950	92,400	92,850	93,300	93,740	28

HEADWATER ELEVATION

GATE ARRANGEMENT	810.0	810.1	810.2	810.3	810.4	810.5	810.6	810.7	810.8	810.9	811.0	811.1	811.2	811.3	811.4	811.5	811.6	811.7	811.8	811.9	812.0	GATE ARRANGEMENT
1	1,880	1,890	1,890	1,900	1,910	1,920	1,920	1,930	1,940	1,940	1,950	1,960	1,970	1,970	1,980	1,990	1,990	2,000	2,010	2,010	2,020	1
2	4,040	4,060	4,080	4,090	4,110	4,120	4,140	4,150	4,170	4,180	4,200	4,210	4,230	4,240	4,260	4,270	4,290	4,300	4,310	4,330	4,340	2
3	6,230	6,250	6,280	6,300	6,320	6,350	6,370	6,390	6,420	6,440	6,460	6,490	6,510	6,530	6,560	6,580	6,600	6,620	6,650	6,670	6,690	3
4	8,330	8,360	8,390	8,410	8,440	8,470	8,500	8,530	8,560	8,590	8,620	8,650	8,680	8,710	8,740	8,760	8,790	8,820	8,850	8,880	8,910	4
5	10,760	10,800	10,850	10,890	10,930	10,980	11,020	11,060	11,100	11,150	11,190	11,230	11,270	11,320	11,360	11,400	11,440	11,480	11,520	11,560	11,600	5
6	12,900	12,950	13,010	13,060	13,110	13,160	13,210	13,270	13,320	13,370	13,420	13,470	13,520	13,570	13,620	13,670	13,720	13,770	13,820	13,870	13,920	6
7	15,290	15,350	15,410	15,470	15,530	15,590	15,650	15,710	15,770	15,830	15,890	15,950	16,010	16,070	16,130	16,190	16,250	16,310	16,370	16,430	16,490	7
8	17,610	17,680	17,750	17,820	17,890	17,960	18,030	18,100	18,170	18,230	18,300	18,370	18,440	18,510	18,580	18,650	18,710	18,780	18,850	18,920	18,990	8
9	20,070	20,150	20,230	20,310	20,390	20,470	20,540	20,620	20,700	20,780	20,860	20,930	21,010	21,090	21,170	21,240	21,320	21,400	21,470	21,550	21,630	9
10	22,530	22,610	22,700	22,790	22,880	22,960	23,050	23,140	23,220	23,310	23,400	23,480	23,570	23,650	23,740	23,820	23,910	23,990	24,080	24,160	24,250	10
11	24,940	25,040	25,140	25,240	25,330	25,430	25,530	25,620	25,720	25,810	25,910	26,000	26,100	26,190	26,290	26,380	26,470	26,570	26,660	26,750	26,840	11
12	27,620	27,730	27,830	27,940	28,050	28,150	28,260	28,360	28,470	28,570	28,670	28,780	28,880	28,980	29,090	29,190	29,290	29,390	29,490	29,590	29,690	12
13	30,340	30,450	30,570	30,680	30,800	30,910	31,030	31,140	31,250	31,370	31,480	31,590	31,700	31,820	31,930	32,040	32,150	32,260	32,370	32,480	32,590	13
14	33,100	33,230	33,350	33,480	33,600	33,720	33,850	33,970	34,090	34,210	34,340	34,460	34,580	34,700	34,820	34,940	35,060	35,180	35,300	35,410	35,530	14
15	35,850	35,990	36,120	36,250	36,380	36,520	36,650	36,780	36,910	37,040	37,170	37,300	37,430	37,560	37,690	37,820	37,950	38,070	38,200	38,330	38,450	15
16	38,650	38,790	38,930	39,070	39,210	39,360	39,500	39,640	39,780	39,920	40,060	40,190	40,330	40,470	40,610	40,740	40,880	41,020	41,150	41,290	41,420	16
17	44,290	44,450	44,600	44,760	44,910	45,060	45,220	45,370	45,520	45,670	45,820	45,970	46,120	46,270	46,410	46,560	46,710	46,850	47,000	47,140	47,290	17
18	49,940	50,110	50,270	50,440	50,610	50,770	50,940	51,100	51,260	51,420	51,580	51,740	51,900	52,060	52,220	52,380	52,540	52,690	52,850	53,000	53,160	18
19	55,590	55,770	55,950	56,120	56,300	56,480	56,650	56,830	57,000	57,180	57,350	57,520	57,690	57,860	58,030	58,200	58,360	58,530	58,690	58,860	59,020	19
20	61,740	61,920	62,090	62,260	62,440	62,610	62,780	62,960	63,130	63,300	63,470	63,640	63,810	63,980	64,150	64,320	64,490	64,650	64,820	64,990	65,160	20
21	67,890	68,060	68,230	68,400	68,570	68,740	68,910	69,080	69,250	69,420	69,590	69,760	69,930	70,100	70,270	70,440	70,610	70,780	70,950	71,120	71,290	21
22	74,050	74,210	74,380	74,540	74,710	74,880	75,040	75,210	75,380	75,540	75,710	75,880	76,050	76,220	76,390	76,560	76,730	76,900	77,080	77,250	77,420	22
23	80,610	80,870	81,090	81,240	81,390	81,540	81,690	81,840	81,980	82,130	82,280	82,430	82,580	82,720	82,870	83,020	83,170	83,320	83,470	83,610	83,760	23
24	87,180	87,530	87,810	87,940	88,070	88,200	88,330	88,460	88,590	88,720	88,850	88,980	89,100	89,230	89,360	89,480	89,610	89,730	89,850	89,980	90,100	24
25	93,740	94,190	94,520	94,640	94,750	94,870	94,980	95,090	95,200	95,310	95,420	95,530	95,630	95,740	95,840	95,940	96,040	96,140	96,240	96,340	96,440	25
26	93,740	94,190	94,560	94,790	95,020	95,240	95,470	95,690	95,910	96,140	96,360	96,580	96,800	97,020	97,240	97,460	97,670	97,890	98,110	98,320	98,530	26
27	93,740	94,190	94,600	94,940	95,280	95,620	95,950	96,290	96,630	96,960	97,300	97,630	97,970	98,300	98,640	98,970	99,300	99,640	99,970	100,300	100,600	27
28	93,740	94,190	94,640	95,090	95,540	95,990	96,440	96,890	97,340	97,790	98,240	98,690	99,130	99,580	100,000	100,500	100,900	101,400	101,800	102,300	102,700	28

MAY 2008

HEADWATER 808 to 812
TAILWATER 796.51 to 797.5

TELLICO DAM

SPILLWAY DISCHARGE

IN CUBIC FEET PER SECOND

HEADWATER ELEVATION

GATE ARRANGEMENT	812.0	812.1	812.2	812.3	812.4	812.5	812.6	812.7	812.8	812.9	813.0	813.1	813.2	813.3	813.4	813.5	813.6	813.7	813.8	813.9	814.0	GATE ARRANGEMENT
1	2,020	2,030	2,030	2,040	2,050	2,050	2,060	2,070	2,070	2,080	2,090	2,090	2,100	2,110	2,110	2,120	2,120	2,130	2,140	2,140	2,150	1
2	4,340	4,360	4,370	4,390	4,400	4,420	4,430	4,440	4,460	4,470	4,490	4,500	4,510	4,530	4,540	4,560	4,570	4,580	4,600	4,610	4,620	2
3	6,690	6,710	6,740	6,760	6,780	6,800	6,820	6,850	6,870	6,890	6,910	6,930	6,950	6,970	7,000	7,020	7,040	7,060	7,080	7,100	7,120	3
4	8,910	8,940	8,970	9,000	9,030	9,060	9,090	9,120	9,150	9,180	9,210	9,240	9,270	9,300	9,330	9,360	9,390	9,420	9,450	9,490	9,520	4
5	11,600	11,640	11,690	11,730	11,760	11,800	11,840	11,880	11,920	11,960	12,000	12,040	12,080	12,110	12,150	12,190	12,230	12,260	12,300	12,340	12,380	5
6	13,920	13,970	14,010	14,060	14,110	14,160	14,200	14,250	14,300	14,340	14,390	14,440	14,480	14,530	14,570	14,620	14,660	14,710	14,750	14,800	14,840	6
7	16,490	16,550	16,600	16,660	16,720	16,780	16,830	16,890	16,950	17,000	17,060	17,120	17,170	17,230	17,280	17,340	17,400	17,450	17,510	17,560	17,620	7
8	18,990	19,050	19,120	19,190	19,260	19,320	19,390	19,460	19,530	19,590	19,660	19,730	19,790	19,860	19,930	19,990	20,060	20,130	20,190	20,260	20,330	8
9	21,630	21,700	21,780	21,850	21,930	22,010	22,080	22,160	22,230	22,310	22,380	22,460	22,530	22,600	22,680	22,750	22,830	22,900	22,970	23,050	23,120	9
10	24,250	24,330	24,410	24,500	24,580	24,670	24,750	24,830	24,910	25,000	25,080	25,160	25,240	25,320	25,410	25,490	25,570	25,650	25,730	25,810	25,890	10
11	26,840	26,940	27,030	27,120	27,210	27,300	27,390	27,480	27,570	27,660	27,750	27,840	27,930	28,020	28,100	28,190	28,280	28,370	28,450	28,540	28,620	11
12	29,690	29,790	29,890	29,990	30,090	30,190	30,290	30,390	30,490	30,580	30,680	30,780	30,880	30,970	31,070	31,160	31,260	31,360	31,450	31,540	31,640	12
13	32,590	32,700	32,810	32,910	33,020	33,130	33,240	33,350	33,450	33,560	33,660	33,770	33,880	33,980	34,090	34,190	34,290	34,400	34,500	34,600	34,710	13
14	35,530	35,650	35,770	35,880	36,000	36,110	36,230	36,350	36,460	36,570	36,690	36,800	36,920	37,030	37,140	37,250	37,370	37,480	37,590	37,700	37,810	14
15	38,450	38,580	38,710	38,830	38,960	39,080	39,210	39,330	39,460	39,580	39,700	39,830	39,950	40,070	40,190	40,310	40,440	40,560	40,680	40,800	40,920	15
16	41,420	41,560	41,690	41,820	41,960	42,090	42,220	42,350	42,480	42,610	42,750	42,880	43,010	43,140	43,260	43,390	43,520	43,650	43,780	43,910	44,030	16
17	47,290	47,430	47,580	47,720	47,860	48,000	48,140	48,280	48,420	48,560	48,700	48,840	48,980	49,120	49,260	49,400	49,530	49,670	49,810	49,940	50,080	17
18	53,160	53,310	53,460	53,610	53,770	53,920	54,070	54,220	54,370	54,510	54,660	54,810	54,960	55,100	55,250	55,400	55,540	55,690	55,830	55,980	56,120	18
19	59,020	59,190	59,350	59,510	59,670	59,830	59,990	60,150	60,310	60,460	60,620	60,780	60,930	61,090	61,240	61,400	61,550	61,710	61,860	62,010	62,160	19
20	65,160	65,320	65,490	65,660	65,820	65,990	66,160	66,320	66,490	66,650	66,820	66,980	67,150	67,310	67,470	67,640	67,800	67,960	68,130	68,290	68,450	20
21	71,290	71,460	71,630	71,800	71,980	72,150	72,320	72,490	72,670	72,840	73,010	73,180	73,360	73,530	73,700	73,870	74,050	74,220	74,390	74,570	74,740	21
22	77,420	77,600	77,780	77,950	78,130	78,310	78,490	78,660	78,840	79,020	79,200	79,390	79,570	79,750	79,930	80,110	80,290	80,480	80,660	80,840	81,030	22
23	83,760	83,920	84,080	84,240	84,400	84,560	84,720	84,880	85,040	85,200	85,370	85,530	85,690	85,850	86,010	86,170	86,330	86,490	86,650	86,810	86,970	23
24	90,100	90,240	90,390	90,530	90,670	90,820	90,960	91,100	91,240	91,380	91,530	91,670	91,810	91,940	92,080	92,220	92,360	92,500	92,630	92,770	92,910	24
25	96,440	96,570	96,690	96,820	96,950	97,070	97,200	97,320	97,440	97,570	97,690	97,810	97,920	98,040	98,160	98,280	98,390	98,510	98,620	98,730	98,850	25
26	98,530	98,770	99,010	99,240	99,480	99,710	99,940	100,200	100,400	100,600	100,900	101,100	101,300	101,600	101,800	102,000	102,200	102,500	102,700	102,900	103,200	26
27	100,600	101,000	101,300	101,700	102,000	102,300	102,700	103,000	103,400	103,700	104,100	104,400	104,700	105,100	105,400	105,800	106,100	106,400	106,800	107,100	107,500	27
28	102,700	103,200	103,600	104,100	104,500	105,000	105,400	105,900	106,300	106,800	107,200	107,700	108,100	108,600	109,000	109,500	110,000	110,400	110,900	111,300	111,800	28

HEADWATER ELEVATION

GATE ARRANGEMENT	814.0	814.1	814.2	814.3	814.4	814.5	814.6	814.7	814.8	814.9	815.0	815.1	815.2	815.3	815.4	815.5	815.6	815.7	815.8	815.9	816.0	GATE ARRANGEMENT
1	2,150	2,160	2,160	2,170	2,180	2,180	2,190	2,190	2,200	2,210	2,210	2,220	2,220	2,230	2,240	2,240						1
2	4,620	4,640	4,650	4,670	4,680	4,690	4,710	4,720	4,730	4,750	4,760	4,770	4,780	4,800	4,810	4,820	4,840	4,850	4,860	4,880	4,890	2
3	7,120	7,140	7,160	7,190	7,210	7,230	7,250	7,270	7,290	7,310	7,330	7,350	7,370	7,390	7,410	7,430	7,450	7,470	7,490	7,510	7,530	3
4	9,520	9,550	9,580	9,610	9,640	9,670	9,700	9,730	9,760	9,790	9,830	9,860	9,890	9,920	9,950	9,980	10,010	10,040	10,070	10,100	10,140	4
5	12,380	12,410	12,450	12,490	12,520	12,560	12,590	12,630	12,670	12,700	12,740	12,770	12,810	12,840	12,880	12,920	12,950	12,990	13,020	13,060	13,090	5
6	14,840	14,890	14,930	14,970	15,020	15,060	15,100	15,150	15,190	15,230	15,270	15,320	15,360	15,400	15,440	15,480	15,530	15,570	15,610	15,650	15,690	6
7	17,620	17,670	17,720	17,780	17,830	17,890	17,940	17,990	18,050	18,100	18,150	18,210	18,260	18,310	18,360	18,420	18,470	18,520	18,570	18,630	18,680	7
8	20,330	20,390	20,460	20,520	20,590	20,650	20,720	20,780	20,850	20,910	20,980	21,040	21,110	21,170	21,230	21,300	21,360	21,420	21,490	21,550	21,610	8
9	23,120	23,190	23,270	23,340	23,410	23,480	23,550	23,630	23,700	23,770	23,840	23,910	23,980	24,050	24,120	24,190	24,260	24,330	24,400	24,470	24,540	9
10	25,890	25,970	26,050	26,130	26,210	26,280	26,360	26,440	26,520	26,600	26,670	26,750	26,830	26,900	26,980	27,050	27,130	27,200	27,280	27,350	27,430	10
11	28,620	28,710	28,800	28,880	28,960	29,050	29,130	29,220	29,300	29,380	29,460	29,550	29,630	29,710	29,790	29,870	29,950	30,030	30,110	30,190	30,270	11
12	31,640	31,730	31,830	31,920	32,010	32,110	32,200	32,290	32,380	32,470	32,560	32,650	32,750	32,840	32,930	33,020	33,100	33,190	33,280	33,370	33,460	12
13	34,710	34,810	34,910	35,010	35,120	35,220	35,320	35,420	35,520	35,620	35,720	35,820	35,920	36,020	36,120	36,220	36,320	36,420	36,510	36,610	36,710	13
14	37,810	37,920	38,030	38,140	38,250	38,360	38,470	38,580	38,690	38,790	38,900	39,010	39,120	39,220	39,330	39,440	39,540	39,650	39,760	39,860	39,970	14
15	40,920	41,040	41,160	41,280	41,400	41,520	41,630	41,750	41,870	41,990	42,100	42,220	42,340	42,460	42,570	42,690	42,800	42,920	43,030	43,150	43,270	15
16	44,030	44,160	44,290	44,420	44,540	44,670	44,800	44,920	45,050	45,180	45,300	45,430	45,560	45,680	45,810	45,930	46,060	46,190	46,310	46,440	46,570	16
17	50,080	50,210	50,350	50,480	50,620	50,750	50,890	51,020	51,160	51,290	51,420	51,560	51,690	51,820	51,960	52,090	52,220	52,360	52,490	52,620	52,760	17
18	56,120	56,260	56,410	56,550	56,690	56,830	56,980	57,120	57,260	57,400	57,540	57,680	57,820	57,960	58,110	58,250	58,390	58,530	58,670	58,810	58,950	18
19	62,160	62,310	62,470	62,620	62,770	62,920	63,070	63,220	63,360	63,510	63,660	63,810	63,960	64,110	64,250	64,400	64,550	64,700	64,840	64,990	65,140	19
20	68,450	68,610	68,770	68,940	69,100	69,260	69,420	69,580	69,740	69,900	70,060	70,220	70,370	70,530	70,690	70,850	71,010	71,160	71,320	71,480	71,630	20
21	74,740	74,910	75,080	75,250	75,430	75,600	75,770	75,940	76,110	76,280	76,450	76,620	76,790	76,960	77,130	77,300	77,460	77,630	77,800	77,960	78,130	21
22	81,030	81,210	81,390	81,570	81,760	81,940	82,120	82,300	82,480	82,670	82,850	83,030	83,210	83,390	83,570	83,740	83,920	84,100	84,280	84,450	84,630	22
23	86,970	87,140	87,310	87,480	87,660	87,830	88,000	88,170	88,340	88,510	88,680	88,850	89,020	89,190	89,350	89,520	89,690	89,850	90,020	90,180	90,350	23
24	92,910	93,070	93,230	93,390	93,550	93,720	93,880	94,040	94,200	94,360	94,510	94,670	94,830	94,990	95,140	95,300	95,450	95,610	95,760	95,910	96,070	24
25	98,850	99,000	99,150	99,300	99,450	99,600	99,750	99,900	100,100	100,200	100,300	100,500	100,600	100,800	100,900	101,100	101,200	101,400	101,500	101,600	101,800	25
26	103,200	103,400	103,700	103,900	104,200	104,400	104,700	104,900	105,200	105,400	107,200	107,300	107,400	107,500	107,600	107,700	107,700	107,800	107,900	108,000	108,100	26
27	107,500	107,800	108,200	108,500	108,900	109,200	109,600	109,900	110,300	110,600	114,000	114,000	114,100	114,100	114,200	114,200	114,300	114,300	114,400	114,400	114,500	27
28	111,800	112,200	112,700	113,100	113,600	114,000	114,500	115,000	115,400	115,900	120,800	120,800	120,800	120,800	120,800	120,800	120,800	120,800	120,800	120,800	120,800	28

HEADWATER 812 to 816
TAILWATER 796.51 to 797.5

See special instruction for preventing gate overflow on page 2.

MAY 2008

TELLICO DAM

SPILLWAY DISCHARGE

IN CUBIC FEET PER SECOND

HEADWATER ELEVATION

GATE ARRANGEMENT	816.0	816.1	816.2	816.3	816.4	816.5	816.6	816.7	816.8	816.9	817.0	817.1	817.2	817.3	817.4	817.5	817.6	817.7	817.8	817.9	818.0	GATE ARRANGEMENT
1																						1
2	4,890	4,900	4,910																			2
3	7,530	7,550	7,570	7,590	7,610	7,630	7,650	7,670	7,690	7,710	7,730											3
4	10,140	10,170	10,200	10,230	10,260	10,290	10,320	10,350	10,380	10,410	10,440	10,650	11,020	11,490	12,050	12,680	13,380	14,140				4
5	13,090	13,130	13,160	13,200	13,230	13,270	13,300	13,340	13,370	13,410	13,440	13,660	14,040	14,510	15,080	15,710	16,420	17,190	18,010	18,900	19,840	5
6	15,690	15,730	15,770	15,810	15,850	15,900	15,940	15,980	16,020	16,060	16,100	16,320	16,700	17,180	17,750	18,390	19,100	19,880	20,710	21,600	22,540	6
7	18,680	18,730	18,780	18,830	18,880	18,930	18,980	19,040	19,090	19,140	19,190	19,420	19,810	20,310	20,880	21,540	22,260	23,040	23,880	24,780	25,730	7
8	21,610	21,670	21,740	21,800	21,860	21,920	21,980	22,040	22,110	22,170	22,230	22,470	22,870	23,380	23,960	24,630	25,360	26,150	27,000	27,910	28,870	8
9	24,540	24,610	24,680	24,750	24,810	24,880	24,950	25,020	25,080	25,150	25,220	25,470	25,880	26,380	26,980	27,650	28,380	29,180	30,040	30,960	31,930	9
10	27,430	27,500	27,570	27,650	27,720	27,790	27,860	27,930	28,000	28,080	28,150	28,400	28,810	29,320	29,920	30,590	31,330	32,130	33,000	33,910	34,890	10
11	30,270	30,350	30,430	30,500	30,580	30,660	30,740	30,810	30,890	30,960	31,040	31,300	31,710	32,230	32,830	33,510	34,250	35,060	35,930	36,850	37,830	11
12	33,460	33,550	33,630	33,720	33,810	33,900	33,980	34,070	34,160	34,240	34,330	34,600	35,020	35,550	36,160	36,850	37,600	38,420	39,300	40,230	41,220	12
13	36,710	36,810	36,900	37,000	37,100	37,190	37,290	37,390	37,480	37,580	37,670	37,950	38,390	38,920	39,550	40,240	41,010	41,840	42,720	43,670	44,660	13
14	39,970	40,070	40,180	40,290	40,390	40,500	40,600	40,700	40,810	40,910	41,020	41,310	41,750	42,290	42,930	43,630	44,410	45,240	46,140	47,090	48,100	14
15	43,270	43,380	43,490	43,610	43,720	43,840	43,950	44,060	44,180	44,290	44,400	44,700	45,150	45,710	46,350	47,060	47,840	48,690	49,600	50,560	51,570	15
16	46,570	46,690	46,820	46,940	47,070	47,200	47,320	47,450	47,580	47,700	47,830	48,140	48,610	49,180	49,830	50,560	51,360	52,220	53,140	54,120	55,150	16
17	52,760	52,890	53,020	53,160	53,290	53,420	53,560	53,690	53,820	53,960	54,090	54,410	54,880	55,460	56,120	56,850	57,660	58,520	59,450	60,430	61,470	17
18	58,950	59,090	59,230	59,370	59,510	59,650	59,790	59,930	60,070	60,210	60,350	60,670	61,150	61,730	62,400	63,140	63,950	64,830	65,760	66,750	67,790	18
19	65,140	65,280	65,430	65,580	65,720	65,870	66,020	66,160	66,310	66,460	66,600	66,940	67,420	68,010	68,680	69,430	70,250	71,130	72,070	73,060	74,110	19
20	71,630	71,790	71,940	72,100	72,250	72,410	72,560	72,720	72,870	73,030	73,180	73,520	74,010	74,600	75,280	76,040	76,860	77,740	78,690	79,690	80,740	20
21	78,130	78,290	78,460	78,620	78,790	78,950	79,110	79,270	79,430	79,590	79,750	80,100	80,600	81,200	81,880	82,640	83,470	84,360	85,310	86,310	87,370	21
22	84,630	84,800	84,970	85,140	85,320	85,490	85,660	85,830	85,990	86,160	86,330	86,680	87,180	87,790	88,480	89,250	90,080	90,970	91,930	92,940	94,000	22
23	90,350	90,520	90,700	90,870	91,040	91,220	91,390	91,560	91,730	91,900	92,070	92,420	92,930	93,540	94,230	95,000	95,840	96,740	97,700	98,710	99,780	23
24	96,070	96,240	96,420	96,600	96,770	96,950	97,120	97,300	97,470	97,640	97,810	98,170	98,680	99,290	99,990	100,800	101,600	102,500	103,500	104,500	105,600	24
25	101,800	102,000	102,100	102,300	102,500	102,700	102,900	103,000	103,200	103,400	103,600	103,900	104,400	105,000	105,700	106,500	107,400	108,300	109,200	110,300	111,300	25
26	108,100	108,300	108,400	108,500	108,600	108,700	108,900	109,000	109,100	109,200	109,300	109,700	110,100	110,700	111,300	112,000	112,800	113,700	114,600	115,600	116,600	26
27	114,500	114,500	114,600	114,700	114,800	114,800	114,900	114,900	115,000	115,100	115,100	115,400	115,800	116,300	116,900	117,600	118,300	119,100	120,000	120,900	121,900	27
28	120,800	120,800	120,900	120,900	120,900	120,900	120,900	120,900	120,900	120,900	120,900	121,100	121,500	121,900	122,500	123,100	123,800	124,500	125,300	126,200	127,100	28

HEADWATER ELEVATION

GATE ARRANGEMENT	818.0	818.1	818.2	818.3	818.4	818.5	818.6	818.7	818.8	818.9	819.0	819.1	819.2	819.3	819.4	819.5	819.6	819.7	819.8	819.9	820.0	GATE ARRANGEMENT
1																						1
2																						2
3																						3
4																						4
5	19,840	20,830	21,870	22,950	24,090																	5
6	22,540	23,540	24,580	25,680	26,820	28,000	29,240	30,510	31,830	33,200	34,600	36,050										6
7	25,730	26,740	27,790	28,900	30,050	31,250	32,490	33,780	35,110	36,480	37,890	39,350	40,840	42,380	43,960	45,570	47,220	48,920	50,650			7
8	28,870	29,890	30,950	32,070	33,230	34,430	35,680	36,980	38,320	39,700	41,130	42,590	44,100	45,640	47,230	48,850	50,520	52,220	53,950	55,730	57,540	8
9	31,930	32,950	34,020	35,140	36,300	37,520	38,770	40,080	41,420	42,810	44,240	45,710	47,220	48,780	50,370	52,000	53,670	55,370	57,120	58,900	60,720	9
10	34,890	35,910	36,980	38,100	39,270	40,490	41,750	43,050	44,400	45,790	47,230	48,700	50,210	51,770	53,360	54,990	56,660	58,370	60,120	61,900	63,720	10
11	37,830	38,860	39,930	41,060	42,240	43,460	44,720	46,030	47,380	48,780	50,210	51,690	53,210	54,770	56,370	58,010	59,680	61,390	63,150	64,930	66,760	11
12	41,220	42,260	43,350	44,480	45,670	46,900	48,180	49,500	50,860	52,270	53,710	55,200	56,730	58,300	59,910	61,560	63,250	64,970	66,730	68,530	70,370	12
13	44,660	45,710	46,810	47,960	49,150	50,400	51,680	53,010	54,390	55,800	57,260	58,760	60,300	61,880	63,500	65,160	66,860	68,590	70,360	72,170	74,020	13
14	48,100	49,150	50,260	51,420	52,620	53,870	55,170	56,510	57,890	59,320	60,790	62,290	63,840	65,430	67,060	68,730	70,440	72,180	73,960	75,780	77,640	14
15	51,570	52,640	53,750	54,920	56,130	57,390	58,700	60,040	61,440	62,870	64,350	65,860	67,420	69,020	70,660	72,330	74,050	75,800	77,590	79,420	81,280	15
16	55,150	56,230	57,370	58,550	59,780	61,050	62,370	63,740	65,150	66,600	68,090	69,630	71,200	72,820	74,480	76,170	77,900	79,670	81,480	83,330	85,210	16
17	61,470	62,560	63,700	64,890	66,120	67,410	68,730	70,100	71,520	72,980	74,480	76,020	77,600	79,220	80,880	82,580	84,320	86,090	87,910	89,760	91,650	17
18	67,790	68,890	70,030	71,230	72,470	73,760	75,090	76,470	77,890	79,350	80,860	82,400	83,990	85,620	87,280	88,990	90,730	92,520	94,340	96,190	98,090	18
19	74,110	75,210	76,370	77,570	78,810	80,110	81,450	82,830	84,260	85,730	87,240	88,790	90,380	92,020	93,690	95,400	97,150	98,940	100,800	102,600	104,500	19
20	80,740	81,850	83,000	84,210	85,460	86,760	88,100	89,490	90,920	92,390	93,900	95,460	97,060	98,690	100,400	102,100	103,800	105,600	107,500	109,300	111,200	20
21	87,370	88,480	89,640	90,850	92,110	93,410	94,750	96,140	97,580	99,050	100,600	102,100	103,700	105,400	107,000	108,800	110,500	112,300	114,100	116,000	117,900	21
22	94,000	95,120	96,280	97,490	98,750	100,100	101,400	102,800	104,200	105,700	107,200	108,800	110,400	112,000	113,700	115,400	117,200	119,000	120,800	122,700	124,600	22
23	99,780	100,900	102,100	103,300	104,600	105,900	107,200	108,600	110,100	111,600	113,100	114,700	116,300	117,900	119,600	121,300	123,100	124,900	126,700	128,600	130,500	23
24	105,600	106,700	107,900	109,100	110,400	111,700	113,000	114,500	115,900	117,400	118,900	120,500	122,100	123,800	125,500	127,200	129,000	130,800	132,600	134,500	136,400	24
25	111,300	112,500	113,600	114,900	116,200	117,500	118,900	120,300	121,700	123,200	124,800	126,400	128,000	129,600	131,300	133,100	134,900	136,700	138,500	140,400	142,400	25
26	116,600	117,700	118,900	120,200	121,500	122,800	124,200	125,600	127,100	128,600	130,100	131,700	133,400	135,000	136,700	138,500	140,300	142,100	144,000	145,900	147,800	26
27	121,900	123,000	124,200	125,500	126,800	128,100	129,500	130,900	132,400	133,900	135,500	137,100	138,700	140,400	142,100	143,900	145,700	147,500	149,400	151,300	153,300	27
28	127,100	128,300	129,500	130,800	132,100	133,400	134,800	136,300	137,800	139,300	140,900	142,500	144,100	145,800	147,500	149,300	151,100	153,000	154,800	156,800	158,700	28

MAY 2008

See special instruction for preventing gate overflow on page 2.

HEADWATER 816 to 820
TAILWATER 796.51 to 797.5