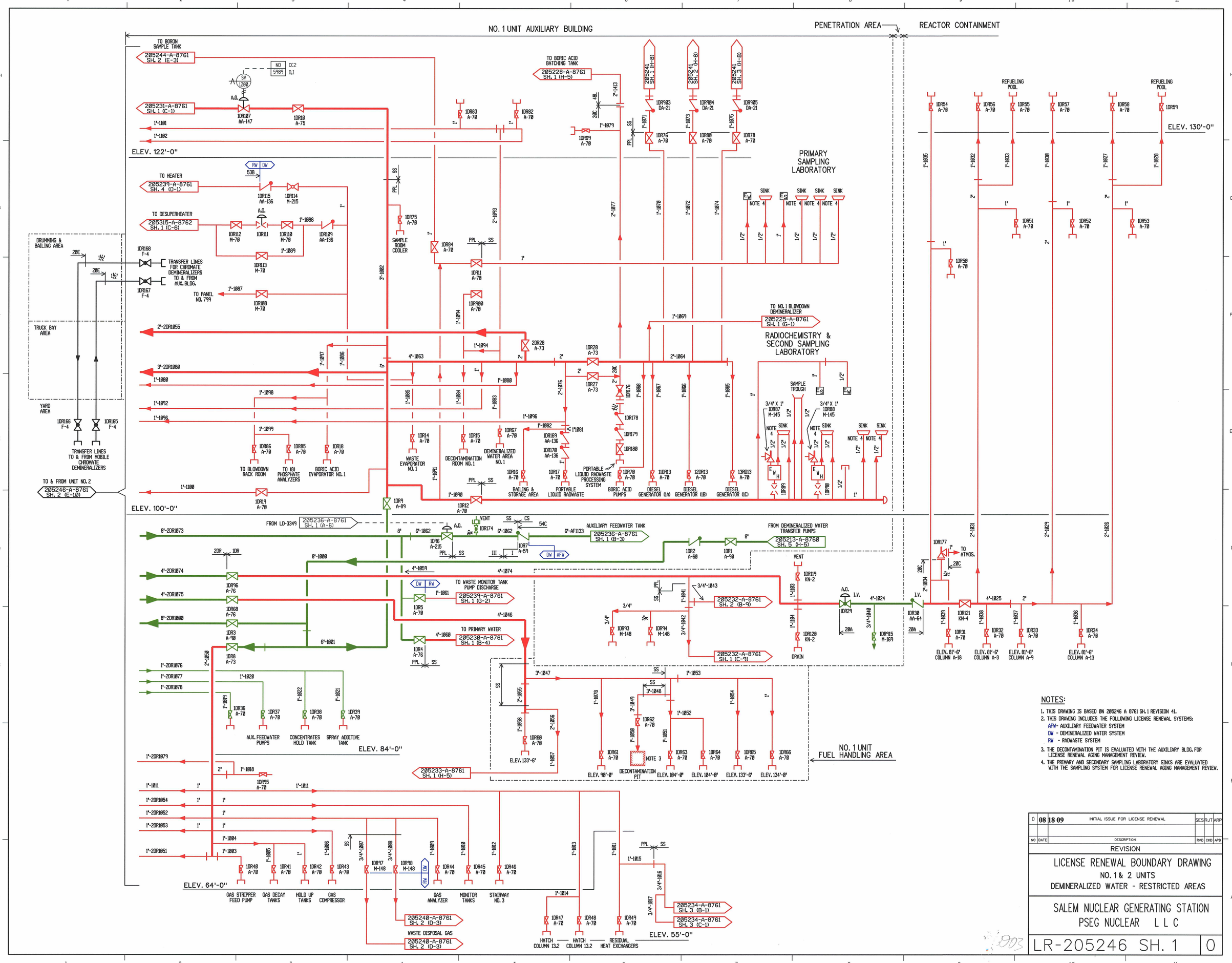

NOTES:

1. THIS DRAWING IS BASED ON 205246 A 8761 SH. 1 REVISION 41.
2. THIS DRAWING INCLUDES THE FOLLOWING LICENSE RENEWAL SYSTEMS:
   AFW- AUXILIARY FEEDWATER SYSTEM
   DW - DEMINERALIZED WATER SYSTEM
   RW - RADWASTE SYSTEM
3. THE DECONTAMINATION PIT IS EVALUATED WITH THE AUXILIARY BLDG. FOR LICENSE RENEWAL AGING MANAGEMENT REVIEW.
4. THE PRIMARY AND SECONDARY SAMPLING LABORATORY SINKS ARE EVALUATED WITH THE SAMPLING SYSTEM FOR LICENSE RENEWAL AGING MANAGEMENT REVIEW.

NO	DATE	DESCRIPTION	RVD	CKD	APD
0	08 18 09	INITIAL ISSUE FOR LICENSE RENEWAL	SES	RJT	ARP

REVISION

LICENSE RENEWAL BOUNDARY DRAWING
NO. 1 & 2 UNITS
DEMINERALIZED WATER - RESTRICTED AREAS

SALEM NUCLEAR GENERATING STATION
PSEG NUCLEAR L L C

LR-205246 SH. 1 | 0