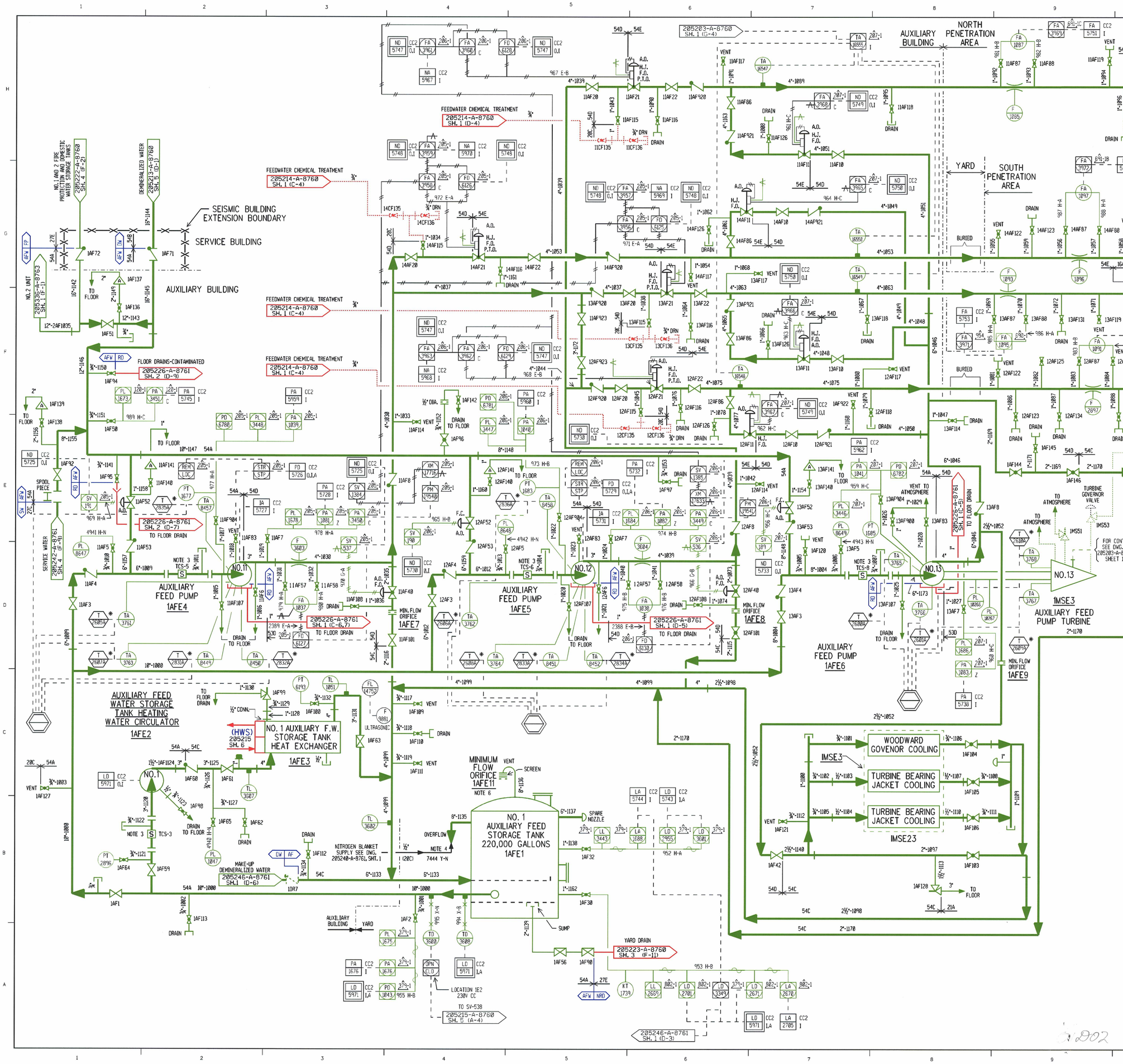

NOTES:

1. THIS DRAWING IS BASED ON 205236 A 8761 REVISION 52.
2. THIS DRAWING INCLUDES THE FOLLOWING LICENSE RENEWAL SYSTEMS:
   - AFW - AUXILIARY FEEDWATER SYSTEM
   - DW - DEMINERALIZED WATER SYSTEM
   - FP - FIRE PROTECTION SYSTEM
   - HWS - HEATING WATER AND HEATING STEAM SYSTEM
   - MCF - MAIN CONDENSATE FEEDWATER SYSTEM
   - NRD - NON-RADIOACTIVE DRAIN SYSTEM
   - RD - RADIOACTIVE DRAIN SYSTEM
   - SW - SERVICE WATER SYSTEM
3. THE STRAINER ELEMENTS FOR THE AUXILIARY FEEDWATER PUMPS AND THE AUXILIARY FEEDWATER STORAGE TANK HEATING WATER CIRCULATOR HAVE BEEN REMOVED FOLLOWING THE INITIAL PLANT STARTUP AND ARE NOT SUBJECT TO AGING MANAGEMENT REVIEW.
4. THE ½ INCH NITROGEN PIPING IS ROOTED INSIDE THE OVERFLOW PIPE AND DOES NOT PROVIDE STRUCTURAL SUPPORT FOR THE SAFETY-RELATED OVERFLOW PIPE.
5. THE FLOW METER, F9881, IS A SURFACE-MOUNTED ULTRASONIC TYPE AND DOES NOT HAVE A PRESSURE BOUNDARY INTENDED FUNCTION AND IS THEREFORE CONSIDERED ACTIVE AND NOT SUBJECT TO AGING MANAGEMENT REVIEW.
6. THE MINIMUM FLOW ORIFICE IS INCLUDED WITH THE AUXILIARY FEEDWATER STORAGE TANK VENT BIRD SCREEN FOR AGING MANAGEMENT REVIEW.

NO	DATE	DESCRIPTION	RVD	CKD	APD
0	08 18 09	INITIAL ISSUE FOR LICENSE RENEWAL	PPO	RJT	ARP

REVISION

LICENSE RENEWAL BOUNDARY DRAWING
NO. 1 UNIT
AUXILIARY FEEDWATER

SALEM NUCLEAR GENERATING STATION
PSEG NUCLEAR L L C

LR-205236 SH. 1 | 0