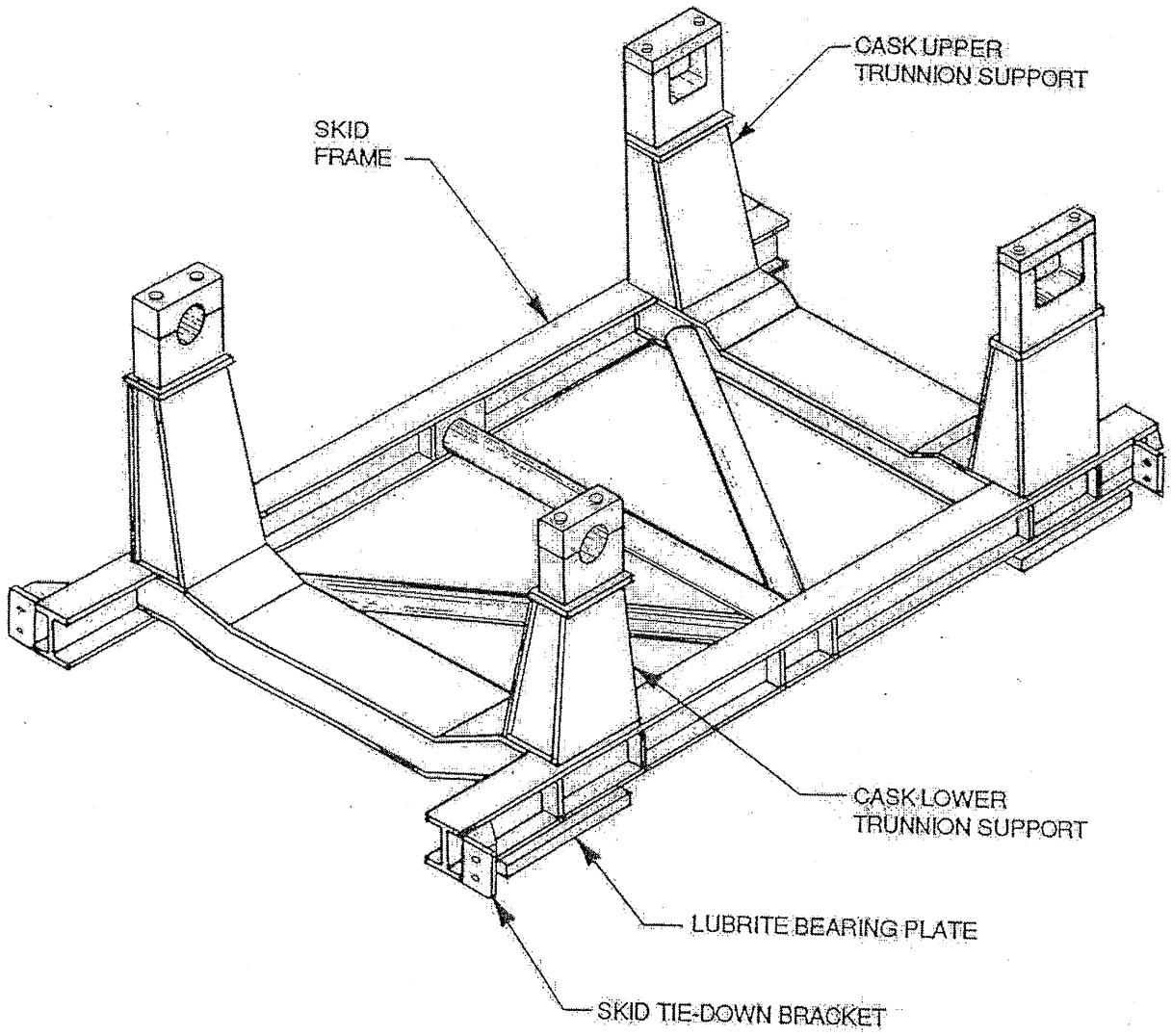

Calvert Cliffs Nuclear Power Plant, Independent Spent Fuel Storage Installation	NUHOMS CASK SUPPORT SKID	USAR Figure 1.3-4 Revision 15