LUDLUM MODEL 177
ALARM RATEMETER

November 2005

Serial Number 121166 and Succeeding

Serial Numbers

LUDLUM MEASUREMENTS, INC.
501 OAK STREET, P.O. BOX 810
SWEETWATER, TEXAS 79556
325-235-5494, FAX: 325-235-4672

REV #	ALTERATIONS	DATE	BY
1	VALID	8/8/91	BK
2	ADDED SYMBOLS	12/7/05	CMC

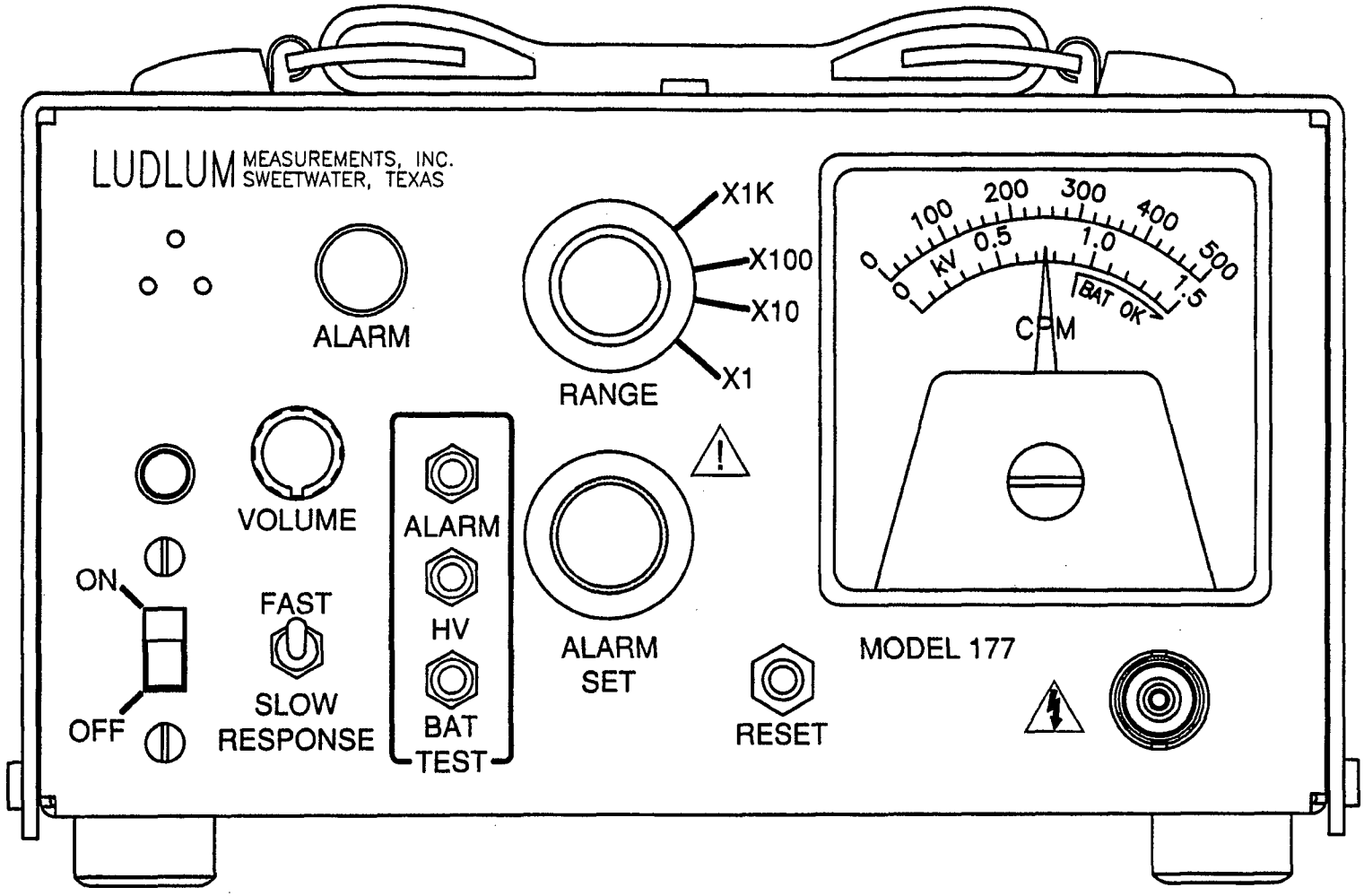

DWN	DATE	CHK	DATE	APP	DATE
CMC	12-7-05			RST	6-6-05

DWG NUM: 4347-186 SCALE: FULL OTHER

TITLE M 177 ALARM RATEMETER

LUDLUM MEASUREMENTS, INC.
501 OAK STREET
SWEETWATER, TEXAS 79556

SERIES 347 SHEET 26

REV #	ALTERATIONS	DATE	BY
1	VALID	8/8/91	BK
2	ADDED SYMBOLS	12/7/05	CMC

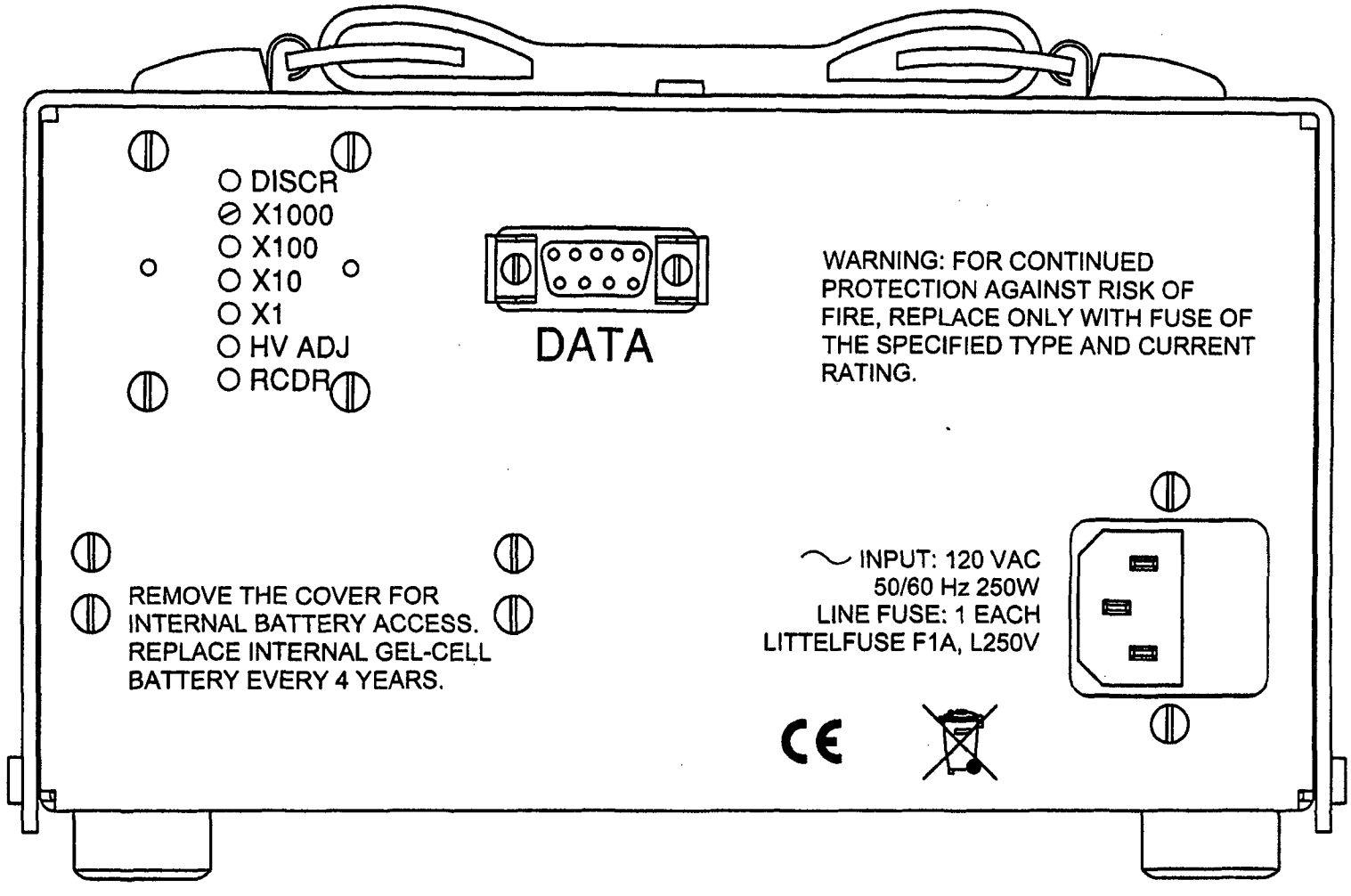

DWN	DATE	CHK	DATE	APP	DATE
CMC	12/7/05			RSF	

DWG NUM: 4347-186 SCALE: FULL ☒ OTHER

TITLE M 177 ALARM RATEMETER

LUDLUM MEASUREMENTS, INC.
501 OAK STREET
SWEETWATER, TEXAS 79556

SERIES 347 SHEET 26A

Table of Contents

Introduction **1**

Getting Started **2**

Preparing the Instrument for Use **2-1**

Operating the Instrument **2-1**

Specifications **3**

Description of Controls and Functions **4**

Front Panel **4-1**

Back Panel **4-2**

CAL Control **4-3**

Internal Controls (Overhaul Only) **4-4**

Safety Considerations **5**

Environmental Conditions for Normal Use **5-1**

Cleaning Instructions and Precautions **5-1**

Warning Markings and Symbols **5-2**

Replacement of Main Fuse **5-3**

Calibration and Maintenance **6**

Calibration **6-1**

Establishing an Operating Point **6-2**

Maintenance **6-3**

Troubleshooting **7**

Troubleshooting Electronics that utilize a G-M, or Scintillation Detector **7-1**

Troubleshooting G-M Detectors **7-2**

Troubleshooting Scintillators **7-3**

Technical Theory of Operation **8**

Amplifier **8-1**

Discriminator **8-1**

Digital Analog Conversion **8-1**

Time Constant **8-2**

Alarm 8-2
Reset 8-2
Audio 8-2
High Voltage (HV) 8-3
Low Voltage 8-3
Battery Charge 8-3
High Voltage Test 8-3
Alarm Set Voltage 8-3
Battery Test Voltage 8-4

Recycling ***9***

Parts List ***10***
Model 177 Alarm Ratemeter 10-1
Main Board, Drawing 347 × 227 10-1
Calibration Board, Drawing 347 × 132 10-4
Wiring Diagram, Drawing 347 × 230 10-5

Drawings and Diagrams ***11***

Section 1

Introduction

The Ludlum Model 177 Alarm Ratemeter may be used with G-M (Geiger-Mueller) or scintillation detectors for contamination monitoring, surveying and area monitoring. The unit provides four ranges (in decades) of the analog meter, enabling measurement from 0 to 500,000 counts per minute (CPM) on the standard meter dial; others are available. Detector high voltage is adjustable from 200 to 1500 volts.

The unit incorporates an adjustable alarm set point. The alarm setting may be checked by depressing the front panel TEST switch. Audible and visual enunciators are triggered when the meter reading rises above the alarm set point. Accessory outputs include: Unbuffered Output, Supply Voltage, Negative Pulse Output, Recorder and Alarm Sink for Remote Relay. The unit may be operated from an internal rechargeable battery or by line AC power.

Section 2

Getting Started

The Ludlum Model 177 Alarm Ratemeter is designed for use with G-M (Geiger Mueller) or scintillation detectors which operate from 200 to 1500 volts. Typical applications include contamination monitoring, surveying and area monitoring.

Preparing the Instrument for Use

Turn the power switch to the ON position. Depress the BAT TEST button. Check that the meter reads above the BAT TEST indication. If the battery does not check, the instrument will operate on AC line power only. The battery may be trickle-charged from line power or fast-charged from an external source. Connect the instrument to line power if necessary.

Select the operating voltage. This voltage is set by the manufacturer for the detector shipped with the instrument and recorded on the Certificate of Calibration. For other detector/instrument setups, consult the detector manual or manufacturer. Then adjust the HV potentiometer accordingly.

Note:

Most G-M detectors will operate at 900 volts. However, some smaller G-M tubes operate at lower voltages.

Operating the Instrument

Connect a detector to the instrument. Obtain a meter reading from a check source or calibrated source, if available. Remove the source.

Set the instrument to the appropriate range with the RANGE selector switch.

If the alarm point is not already set, press the ALARM TEST switch and adjust ALARM SET for the desired alarm point.

Note:

The meter displays the alarm set point when the ALARM TEST switch is depressed. Recheck the set point after locking the ALARM SET control.

Increase the meter count to exceed the alarm threshold. Both the alarm lamp and audible alarm signal should activate.

Depress the RESET button. The meter needle should drive to zero and the alarm circuit should de-energize, shutting off both the visual and audible alarms.

Depress the HV TEST button and ensure that the high voltage is properly set.

Proceed with use.

Section 3

Specifications

Power: 120 VAC 50/60 Hz 250W line power and 6 volt Gell-Cell (sealed lead-acid) battery. Typical battery life of approximately 50 hours in a non-alarming condition with fully charged battery.

Fuse: 1 amp, LITTLEFUSE F1A L250V.

Response Time: Two positions: fast 2.2 seconds; slow 22 seconds for 90% of full scale reading.

Linearity: Within plus or minus 5% of full scale. Typically plus or minus 2% of full scale reading when measured with an electronic pulse generator.

Battery Dependence: Meter readings vary less than 3% within battery check limits.

High Voltage: Variable from 200 to 1500 volts.

Input Sensitivity: Adjustable from 10 through 100 millivolts.

Connector: Series "C".

Audio: Unimorph speaker with volume control located on the front panel.

Meter: 1 mA, size: 2.5" × 2.5," DC movement.

Meter Scale: 0-500 CPM; 0-1.5 kV; BAT TEST.

Ranges: Four ranges of X1 through X1K.

Recorder Output: Adjustable from 0 to 1.25 volts at 1 mA.

Alarm Output: Current sink to 200 mA DC. Open circuit voltage not to exceed 50 Vdc.

Unbuffered Output: May be used to externally add to or subtract from the meter reading.

Alarm Range: Adjustable from 0 through 150% of full scale.

Alarm Output: Visual indicator (lamp), audible tone and remote current sink.

Alarm Control: Factory set to latching. Non-latching alarm available through the removal of main board resistor R116.

Finish: Computer-beige, polyurethane enamel.

Size: 6" (15.24 cm) Depth × 8" (20.32 cm) W × 5"(12.7 cm) H, excluding handle.

Weight: 4.2 lbs. (1.9 kg) with battery.

Section 4

Description of Controls and Functions

Front Panel

Power ON-OFF Switch: Provides line power of 120 VAC 50/60 Hz to the instrument and trickle-charges the standby battery. In case of line power failure, the battery automatically comes on-line to power the instrument. The battery will provide up to 50 hours of operation.

Note:

To recharge the battery, the ON-OFF switch must be in the ON position.

Power-on Lamp: A red lamp that comes on when power is supplied to the instrument.

VOLUME Control: Varies the volume of the audio output through the unimorph speaker. This control has minimal effect on the audio when the alarm is activated.

Audio Speaker: A unimorph speaker, located behind the front panel.

ALARM Lamp: A red lamp that comes on when the alarm threshold has been exceeded. The lamp will remain on (unless the alarm is configured to "non-latching") until the reset button is depressed, driving the meter needle below the alarm threshold.

RANGE Selector Switch: A four-position switch providing range multipliers of X1K, X100, X10, and X1. With a scale (meter face) of 0-500 CPM, the full range of the instrument is 0 to 500,000 CPM .

Ratemeter: A four-decade linear meter with ranges of 0-500, 0-5000, 0-50,000, 0-500,000 CPM. Other meter faces are available depending on the application. Readout is on a 2.5-inch scale panel meter. A separate scale is provided for battery check and high voltage readout.

Connector: Series "C" connector. (Series BNC and MHV connectors are also available). The connector is provided on the front of the instrument for connection to a detector.

RESET Button: This button, when depressed, provides a rapid means of driving the meter needle to zero.

FAST-SLOW RESPONSE Toggle Switch: When in the FAST position, this switch provides 90% of full-scale meter deflection in 2.2 seconds. With this switch in the SLOW position, 90% of full-scale meter deflection takes 22 seconds. If quick needle response and maximum deviation are desired, the FAST position should be used. For slow response and damped meter movement, the SLOW position should be used.

BAT TEST Button: When this button is depressed, the meter displays the battery status. A sufficiently charged battery is indicated when the meter needle is on or within the BAT TEST range.

HV TEST Button: When this button is depressed, the meter displays the detector high voltage.

ALARM TEST Button: When this button is depressed, the meter displays the alarm calibration set point.

ALARM SET: Used to adjust the alarm calibration set point. Note the locking knob below the control.

Back Panel

120V AC plug: Provides power to the instrument from a 120 volts AC, 50/60 Hz, 250W line.

LINE FUSE: Provides line protection with a 1 amp fuse- LITTLEFUSE F1A L250V.

Data: A 9-pin type "D" data plug with connections as follows:

> **PIN 1:** Battery terminal. This is a direct connection and does not go through the front panel ON-OFF switch. Use to parallel battery or use external charger.
>
> **PIN 2:** Unregulated supply from approximately 6 volts, battery only to 9.5 volts with AC power on. Limit current drain to 50 milliamperes.

PIN 3: Instrument common (Ground).

PIN 4: Alarm sink. The open collector of a 2N7002L. Limits sink current to 200 milliamperes with open circuit voltage limited to a range of 0 to +50 volts. Unit conducts when in alarm.

PIN 5: Pulse Out. A negative pulse connected to the discriminator output through a 0.001 uF capacitor. Typically. -4.0 volts.

PIN 6: Unbuffered output ties directly to the meter drive circuit. (R124/C122). Approximately 1.3 volts at full scale. Using an external constant current sink will allow background subtract. At full-scale, draws out approximately 3.3 microamperes to zero the meter.

PIN 7: Recorder output, adjustable from 0 to 1.0 volts at 1 milliamperes.

PIN 8 and PIN 9: Spares

CAL Control

Remove the calibration (cal) cover plate to access the following calibration potentiometers:

DISCR: Discrimination Control. For pancake-type G-M detectors (ie. Model 44-9), adjust DISCR for 80 ± 10 millivolts. All other G-M detectors and scintillators should be set to 35 ± 10 millivolts. If a lower operating voltage for a scintillator is desired, adjust the discriminator to 10 ± 2 millivolts. This control has an adjustable range of 10 to 100 millivolts. A Ludlum Model 500 Pulser may be used to determine the discrimination level.

Calibration Controls: X1K through X1 calibration controls used to calibrate ranges.

HV ADJ: Used to set detector operating voltage.

RCDR: Used to calibrate the recorder output.

Internal Controls (Overhaul Only)

The following controls are located internally, on the main circuit board:

BAT C: Used to adjust charge voltage to 6.825 volts.

BAT T: Used to adjust meter test voltage reading to 5.97 volts at the BAT OK line.

HV T: Used to adjust the high voltage test reading to correspond with the actual high voltage output.

Section 5

Safety Considerations

Environmental Conditions for Normal Use

Indoor use only

No maximum altitude

Temperature range of –20°C to 50°C (–4°F to 122°F)

Maximum relative humidity of less then 95% (non-condensing)

Mains supply voltage range of 95-135 VAC (178-240 VAC available), 50/60Hz single phase (less than 100mA)

Maximum transient voltage of 1500 VAC

Installation Category II (Overvoltage Category as defined by IEC 1010-1)

Pollution Degree 1 (as defined by IEC 664).

Cleaning Instructions and Precautions

The Model 177 Alarm Ratemeter may be cleaned externally with a damp cloth, using only water as the wetting agent. Do not immerse the instrument in any liquid. Observe the following precautions when cleaning:

1. Turn the instrument OFF and disconnect the instrument power cord.

2. Allow the instrument to sit for 1 minute before cleaning.

Warning Markings and Symbols

Caution!

The operator or responsible body is cautioned that the protection provided by the equipment may be impaired if the equipment is used in a manner not specified by Ludlum Measurements, Inc.

The Model 177 Alarm Ratemeter is marked with the following symbols:

ALTERNATING CURRENT (AC) (IEC 417, No. 5032) - designates an input receptacle that accommodates a power cord intended for connection to AC voltages. This symbol appears on the back panel.

PROTECTIVE CONDUCTOR TERMINAL (per IEC 417, No. 5019) – designates the central grounding point for the safety ground. This symbol is visible inside the chassis.

CAUTION (per ISO 3864, No. B.3.1) – designates hazardous live voltage and risk of electric shock. During normal use, internal components are hazardous live. This instrument must be isolated or disconnected from the hazardous live voltage before accessing the internal components. This symbol appears on the front panel. **Note the following precautions:**

Warning!

The operator is strongly cautioned to take the following precautions to avoid contact with internal hazardous live parts that are accessible using a tool:

1. Turn the instrument power OFF and disconnect the power cord.
2. Allow the instrument to sit for 1 minute before accessing internal components.

CAUTION, RISK OF ELECTRIC SHOCK (per ISO 3864, No. B.3.6) – designates a terminal (connector) that allows connection to a voltage exceeding 1 kV. Contact with the subject connector while the instrument is on or shortly after turning off may result in electric shock. This symbol appears on the front panel.

The "**crossed-out wheelie bin**" symbol notifies the consumer that the product is not to be mixed with unsorted municipal waste when discarding; each material must be separated. The symbol is placed near the AC receptacle. See section 9, "Recycling" for further information.

Replacement of Main Fuse (Back Panel)

Warning!

For continued protection against risk of fire, replace only with fuse of the specified type and current rating!

Section 6

Calibration and Maintenance

Calibration

Note:

Local procedures may supersede the following.

Connect the instrument to a Ludlum Model 500 Pulser (Pulse Generator) or equivalent.

The ratemeter may be calibrated by adjusting the calibration controls labeled 1, 10, 100 and 1K. Starting with the 1000 range, apply 400,000 CPM from Pulser. Adjust the 1K calibration control for a meter reading of 400. Drop the Pulser pulse rate to 100,000 CPM and ensure a meter reading of 100 ± 10.

Repeat this procedure for the lower scales with scaled pulse rates.

For pancake-type G-M detectors (ie. Model 44-9), adjust DISCR for 80 ± 10 millivolts. All other G-M detectors and scintillators should be set to 35 ± 10 millivolts. To lower the scintillation detector operating voltage, decrease the input sensitivity to 10 ± 2 millivolts. Adjustment is made by setting the pulse generator amplitude to the desired pulse height. Adjust DISCR until the meter reaches 75% of the generated incoming count rate.

Connect the Model 177 to an external voltmeter. Adjust the rear panel HV control for a reading of 1000 Vdc on the voltmeter. Depress HV TEST. On the main board, adjust HV for a meter reading of 1.0 kV. Using the rear panel HV control, vary the high voltage output from 500 to 1500 Vdc and ensure that the high voltage meter reads within 10% of the Model 177 meter reading.

Adjust RCDR (recorder output) for 1 volt output (equivalent to full scale).

Adjust ALARM SET to the desired set point.

Establishing an Operating Point

The operating point for the instrument and detectors is established by setting the detector voltage and instrument sensitivity (HV and DIS). The proper selection of this point is the key to instrument performance.

Efficiency, background sensitivity and noise are fixed by the physical makeup of the given detector and rarely vary from unit to unit. However, the selection of the operating point makes a significant difference in the contribution of these three sources of count.

The purpose of setting the operating point is to establish the system gain so that the desirable signal pulses (including background) are above the discrimination level, and the unwanted pulses from noise are below the discrimination level. The pulses above the discrimination level are counted by the instrument, while those below are not.

The total system gain is controlled by adjusting the instrument gain or the high voltage. Voltage affects the output of the detector. Amplifier gain is controlled by the DIS (discriminator) control.

In special cases of G-M detectors, a minimum voltage must be applied to establish the Geiger-Mueller characteristic. Further changes in gain will not affect this type of detector.

The operating point for each detector is set at a compromise point between sensitivity, stability and background contribution. These operating points are best for general monitoring. In application, these arbitrarily selected points may not be a better operating point. The following guidelines are presented:

G-M Detectors: The output pulse height of the G-M detector is not proportional to the energy of the detected radiation. Adjusting DIS will have minimal effect on the observed count rate unless the setting is so low that the instrument double pulses.

For most G-M detectors, set DIS for 30-40 millivolts and adjust HV to the G-M tube recommended high voltage. Most G-M detectors operate at 900 volts, however, some miniature detectors operate at 400-600 volts. If a recommended setting is unavailable, run a plateau of HV setting vs. count rate. Then set the high voltage on the low side of "center."

Scintillators: Set DIS for 10 millivolts. Carefully increase HV until the instrument plateaus on the background count. This provides the most stable operating point for the detector.

Maintenance

Instrument maintenance consists of keeping the instrument clean and periodically checking the battery and calibration.

An instrument operational check should be performed prior to each use by exposing the detector to a known source and confirming the proper reading on each scale.

Recalibration should be accomplished after any maintenance or adjustment has been performed on the instrument. Ludlum Measurements recommends recalibration at intervals no greater than one year. Local regulations may have precedence over this recommendation.

To maintain the life of the battery, it is recommended that the instrument be constantly connected to line power with the power switch in the ON position, even when the instrument is not in use. This will keep the internal battery fully charged.

When the instrument is used without line power, adequate charge time must be allowed for the internal battery to recharge. If possible, leave the instrument on with line power applied overnight and weekends. At a minimum, allow one hour of charge time for each hour of use. If the battery is inadvertently allowed to fully discharge, and is left in that state, constant charging for 500 hours (3 weeks) may be required for battery recovery.

Note:

The ON-OFF switch must be in the ON position to charge the batteries. If the unit is out of service for extended periods of time, charge the battery every 6 months.

It is recommended that the internal GEL-CELL battery be replaced every 4 years.

Section 7

Troubleshooting

Occasionally, you may encounter problems with your LMI instrument or detector that may be repaired or resolved in the field, saving turnaround time and expense in returning the instrument to us for repair. Toward that end, LMI electronics technicians offer the following tips for troubleshooting the most common problems. Where several steps are given, perform them in order until the problem is corrected. Keep in mind that with this instrument, the most common problems encountered are: 1. detector cables; 2: sticky meters.

Note that the first troubleshooting tip is for determining whether the problem is with the electronics or with the detector. A Ludlum Model 500 Pulser is invaluable at this point, because of its ability to simultaneously check high voltage, input sensitivity or threshold, and the electronics for proper counting.

We hope these tips will prove to be helpful. As always, please call if you encounter difficulty in resolving a problem or if you have any questions.

Troubleshooting Electronics that utilize a G-M, or Scintillation Detector

SYMPTOM	POSSIBLE SOLUTION
No power (or meter does not reach BAT TEST or BAT OK mark)	1. Check battery and charge if necessary. 2. Check for loose or broken wires, especially between the main board and the calibration board.

SYMPTOM	POSSIBLE SOLUTION
Nonlinear Readings	1. Check the high voltage (HV) by pressing the HV TEST button. If a Multimeter is used to check the HV, ensure that one with high impedance is used; as a standard Multimeter could be damaged in this process. 2. Check for noise in the detector cable by disconnecting the detector and placing the instrument on the lowest range setting. Wiggle the cable and observe the reading for significant changes. 3. Check for "sticky" meter movement. Does the reading change when you tap the meter? Does the meter needle "stick" at any spot? 4. Check the "meter zero." Turn the power OFF. The meter should come to rest on "0".
Meter goes full-scale or "Pegs Out"	1. Replace the detector cable to see if it has failed, causing excess noise. 2. Check the HV and, if possible, the input threshold for proper setting. 3. Check for loose wires, especially between the main board and the calibration board.

Troubleshooting G-M Detectors

1. If the tube has a thin mica window, check for window breakage. If damage is evident, the tube must be replaced.

2. Check the HV. For most G-M tubes, the voltage is normally 900 Vdc, or 460-550 Vdc for "peanut" tubes (Ludlum Model 133 series).

3. If the input sensitivity is too low, the user could see some double-pulsing. See Page 4-3, "**DISCR**" for further information on sensitivity/discrimination control.

4. Wires to the tube may be broken or the crimped connector could have a loose wire.

Troubleshooting Scintillators

1. Alpha or Alpha/Beta scintillators are prone to light leaks. They can be tested for this problem in a dark room or with a bright light. If a light leak is determined, changing the Mylar window assembly will usually fix the problem.

Note:

When replacing the window, make sure to use a window made with the same thickness Mylar and the same number of layers as the original window.

2. Verify that the HV and input sensitivity are correct. Alpha and gamma scintillators typically operate from 10-35 mV. High voltage varies with photomultiplier tubes (PMT), from as low as 600 Vdc, to as high as 1400 Vdc.

3. On a gamma scintillator, visually inspect the crystal for breakage or humidity leakage. Water inside the crystal will turn it yellow and gradually degrade performance.

4. Check the PMT to see if the photocathode still exists. If the end of the PMT is clear (not brownish), this indicates a loss of vacuum which will render the PMT useless.

Section 8

Technical Theory of Operation

Amplifier

Negative detector pulses are coupled through C124 to emitter follower Pin U121. R127 protects the input from inadvertent H.V. shorts. R129 couples the detector to the high voltage supply.

Negative pulses from emitter, Pin 2 of U121, are coupled through C121 to amplifier Pin 5 through Pin 7 of U121. This amplifier is self-biased and provides gain in proportion to R029 divided by R0210. Transistor (pins 4-5-6, U121) provides amplification. Pins 12 and 15 of U121 are coupled as a current mirror to provide a load for Pin 6 of U121. The output self-bias to 2 Vbe (approximately 1.4 volts) at Pin 7 of U121. This provides just enough bias current through Pin 6 of U121 to conduct all of the current from the current mirror.

Positive pulses from Pin 7 of U121 are coupled to the discriminator.

Discriminator

Comparator U021 provides discrimination. The discriminator is set by the DIS (Discriminator) control located on the rear panel, coupled to Pin 5 of U021. Negative pulses (approx. 5 volts) at Pin 7 of U021 are coupled to Pin 5 of U011 for meter drive and Pin 11 of U011 for audio.

Digital Analog Conversion

Pin 7 of U021 is connected to the dual univibrator, U011. For each low pulse for Pin 7 of U021, Pin 6 of U011 goes high. The pulse of Pin 6 of U011 is typically 5.0 volts for 6 milliseconds on X1 to 6 microseconds on X1k. This pulse is connected to the constant current drive U012. The pulse width control (R3-C2 on calibration board) is utilized for calibration adjustment. Controls R4 through R6 allow calibration on other scales.

For each positive pulse connected to Pin 8 of U012, a constant current pulse is sourced at Pin 15 of U012. This current pulse charges C122, which is

discharged by R124. The average voltage on C122 is coupled through HV, BAT, and ALARM TEST switch to voltage-follower Pin 5 of U311. Pin 7 of U311 drives the meter and recorder output.

Time Constant

The meter time constant is determined by R124 and C122. For a slower time constant, C122 is paralleled by C101. When C101 is not used, it is connected to Pin 7 of U311 (voltage follower), maintaining the same voltage level as C122. This allows C101 to be switched in or out of the circuit without transients.

Alarm

An alarm is provided by U021, Pins 1, 2, and 3. The alarm set control biases the op-amp U021 for a low output. When the meter signal at Pin 3 exceeds the bias of Pin 2, the output at Pin 1 goes high. Q102 and Q103 saturate, allowing supply voltage to be coupled to:

Lamp voltage through R004.

Audio Oscillator U16 through CR112.

R116 couples back to Base of Q102, locking up the Alarm On.

Through CR113 to Audio Transformer T211, allowing full voltage for full volume.

Through R111 to saturating current sink Q101 for external use.

Reset

Reset is provided by coupling a voltage to the base of transistors U012 pins 1, 2, 3, and 4, 5, 6. Both transistors saturate. One discharges C122 causing the meter to zero. Pin 3 U012 turns Q102 off, allowing the alarm to reset.

Audio

A high on Pin 4 U111 turns the oscillator on saturating Q111 with each positive swing of the oscillator. T211 couples the pulses to the unimorph. Audio volume is controlled by voltage, applied to Pin 2 of T211. This is either 4.3 volts from the alarm circuit or 0 to 4.3 volts from external volume control through emitter follower Q104.

For counting, audio pulse width is set by R113/C111 of U011 with one pulse per count. For an alarm condition, Pin 4 U111 is held high through CR112 until alarm is reset. Alarm audio tone is controlled by R117 and C112.

High Voltage (HV)

The high voltage power supply is a blocking oscillator utilizing Q401-T411 and quadrupler CR123, CR421, CR422 and through CR423. The HV output is controlled by conduction to ground through Q302. With Q302 saturated, the HV output is maximum.

The op amp, U311 Pins 1, 2, 3, is used as a comparator to compare the voltage reference at Pin 3 to the feedback voltage at Pin 2 through R322 for voltage control and regulation. High voltage is adjusted by HV control R311 changing bias on Pin 2 U311. With the HV control wiper at ground, H.V output is maximum.

Low Voltage

Low voltage is supplied by internal battery B1 (wiring diagram, 347 × 126) or line power T1. Unregulated power at C125 is coupled to voltage regulator VR211 and battery charger U201-Q301.

Regulated low voltage is supplied to the balance of the circuit through VR131 at 5.0 volts and U301 at 1.2 volts.

Battery Charge

Battery charge is provided by voltage regulator U201 and power transistor Q301. R402 limits charge current for discharged battery. A negative voltage coefficient of 0-0063 volts per degree F is provided by ratio of R013/R201. R013 set output voltage to 6.825 volts.

High Voltage Test

High voltage test is supplied by R001 through HV TEST switch, BAT TEST switch, ALARM TEST, Pin 5 of U311, then the meter. The HV readout is calibrated by R001.

Alarm Set Voltage

Alarm set voltage is coupled from ALARM SET control through the ALARM TEST switch, voltage follower Pin 5 of U311, and to the meter.

Battery Test Voltage

Battery test voltage is controlled by R002 through BAT TEST switch, ALARM TEST switch, voltage follower Pin 5 of U311 to the meter.

Section 9

Recycling

Ludlum Measurements, Inc. supports the recycling of the electronics products it produces for the purpose of protecting the environment and to comply with all regional, national and international agencies that promote economically and environmentally sustainable recycling systems. To this end, Ludlum Measurements, Inc. strives to supply the consumer of its goods with information regarding reuse and recycling of the many different types of materials used in its products. With many different agencies, public and private, involved in this pursuit it becomes evident that a myriad of methods can be used in the process of recycling. Therefore, Ludlum Measurements, Inc. does not suggest one particular method over another, but simply desires to inform its consumers of the range of recyclable materials present in its products, so that the user will have flexibility in following all local and federal laws.

The following types of recyclable materials are present in Ludlum Measurements, Inc. electronics products, and should be recycled separately. The list is not all-inclusive, nor does it suggest that all materials are present in each piece of equipment:

Batteries	Glass	Aluminum and Stainless Steel
Circuit Boards	Plastics	Liquid Crystal Display (LCD)

Ludlum Measurements, Inc. products which have been placed on the market after August 13, 2005 have been labeled with a symbol recognized internationally as the "crossed-out wheelie bin" which notifies the consumer that the product is not to be mixed with unsorted municipal waste when discarding; each material must be separated. The symbol will be placed near the AC receptacle, except for portable equipment where it will be placed on the battery lid.

The symbol appears as such:

Section 10

Parts List

	Reference	Description	Part Number
Model 177 Alarm Ratemeter	UNIT	Completely Assembled Model 177 Alarm Ratemeter	48-1632
Main Board, Drawing 347 × 227	BOARD	Completely Assembled Circuit Board	5347-293
CAPACITORS	C001	10UF, 20V,	04-5655
	C011	47PF, 100V	04-5660
	C012	68UF, 6.3V	04-5654
	C021	0.1UF, 50V	04-5663
	C022	0.001UF, 100V	04-5659
	C023-C024	0.1UF, 50V	04-5663
	C025	10PF, 100V	04-5673
	C101	22UF, 10V	04-5672
	C111	0.022UF, 50V	04-5667
	C112	470PF, 100V	04-5668
	C121	0.001UF, 100V	04-5659
	C122	2.2UF, 20V	04-5671
	C123	1UF, 35V	04-5656
	C124	100PF, 3KV	04-5532
	C125	3300UF, 35V	04-5675
	C211	47UF, 10V	04-5666
	C221	0.0056UF, 3KV	04-5522
	C301-C302	47UF, 10V	04-5666
	C311-C312	0.01UF, 50V	04-5664
	C321	100PF, 3KV	04-5532
	C322	0.0056UF, 3KV	04-5522
	C323	0.0047UF, 3KV	04-5547

	Reference	Description	Part Number
	C401-C402	1UF, 35V	04-5656
	C403	0.1UF, 50V	04-5663
	C411	47UF, 10V	04-5666
	C421-C423	0.0047UF, 3KV	04-5547
TRANSISTORS	Q101	2N7002L	05-5840
	Q102	MMBT3904T	05-5841
	Q103	MJD210	05-5843
	Q104	MMBT3904T	05-5841
	Q111	MMBT3904T	05-5841
	Q301	MJD200	05-5844
	Q302	MMBT3904T	05-5841
	Q401	MJD210	05-5843
VOLTAGE REGULATOR	VR211	LM2931AT 5.0	05-5813
INTEGRATED CIRCUITS	U011	CD74HC4538M	06-6297
	U012	CA3096M	06-6288
	U021	TLC372ID	06-6290
	U111	ICM7555CBA	06-6300
	U121	CA3096M	06-6288
	U201	ICL7663SCBA	06-6302
	U301	LM285M-1.2	05-5845
	U311	TLC27M7ID	06-6292
DIODES			
	CR111-CR114	MMBD914L	07-6353
	CR201-CR202	CXSH-4	07-6358
	CR321	1N4007	07-6274
	CR401	MMBD914L	07-6353
	CR421-CR423	1N4007	07-6274
THERMISTOR			
	R314	250	07-6366
POTENTIOMETERS / TRIMMERS			
	R001	1M, HV TEST	09-6906
	R002	50K, BAT T	09-6920
	R013	50K, BAT C	09-6920

	Reference	Description	Part Number
RESISTORS			
	R003	475K, 1%, 125mW	12-7859
	R004	10.0, 1%, 125mW	12 7836
	R011	4.75K, 1%, 125mW	12-7858
	R012	82.5K, 1%, 125mW	12-7849
	R014-R015	100K, 1%, 125mW	12 7834
	R016	100, 1%, 125mW	12-7840
	R021-R022	10.0K, 1%, 125mW	12-7839
	R023	100K, 1%, 125mW	12-7834
	R024	1.00K, 1%, 125mW	12-7832
	R025	10.0K, 1%, 125mW	12-7839
	R026-R027	100K, 1%, 125mW	12-7834
	R028	10.0K, 1%, 125mW	12-7839
	R029	221K, 1%, 125mW	12-7845
	R0210	5.62K, 1%, 125mW	12-7871
	R101	1.00K, 1%, 125mW	12-7832
	R102	10.0K, 1%, 125mW	12-7839
	R103	100, 1%, 125mW	12-7840
	R111	1.00K, 1%, 125mW	12-7832
	R112	100K, 1%, 125mW	12-7834
	R113	1.00M, 1%, 125mW	12-7844
	R114	SAT, TYPICALLY 35.7K, 1%, 125mW	12-7911
	R115	100 OHM, 1%	12-7840
	R116	56.2K, 1%, 125mW	12-7873
	R117	1.00M, 1%, 125mW	12-7844
	R118	3.32K, 1%, 125mW	12-7870
	R121	3.92K, 1%, 125mW	12-7875
	R122	10.0K, 1%, 125mW	12-7839
	R123	100, 1%, 125mW	12-7840
	R124	392K, 1%, 125mW	12-7841
	R125	47.5K, 1%, 125mW	12-7872
	R126	100K, 1%, 125mW	12-7834
	R127	10.0K, 1%, 125mW	12-7839
	R128	221K, 1%, 125mW	12-7845
	R129	1M	10-7028
	R201	165K, 1%, 125mW	12-7877
	R202	1.00K, 1%, 125mW	12-7832
	R203	2.2, 5%, 125mW	12-7932
	R221	1M	10-7028
	R301	10.0K, 1%, 125mW	12-7839

	Reference	Description	Part Number
	R302	1.00K, 1%, 125mW	12-7832
	R303	2.21K, 1%, 125mW	12-7835
	R311	750K, 1%, 125mW	12-7882
	R312	301, 1%, 125mW	12-7863
	R313	475 ohm, 1%, 125mW	12-7851
	R315	22.1K, 1%, 125mW	12-7843
	R316	1.00M, 1%, 125mW	12-7844
	R321-R322	1G	12-7686
	R323	1M	10-7028
	R401	200, 1%, 125mW	12-7846
	R402	15, 1W	12-7738
TRANSFORMERS	T211	4275-083	4275-083
	T411	40-0902, 9=GND, 10=GND	40-0902
MISCELLANEOUS	P1	CONN-640445-3	
		MTA156	13-8125
	P2	CONN-1-640456-2	
		MTA100	13-8061
	P3	CONN-1-640456-0	
		MTA100	13-8066
	10 EA.	CLOVERLEAF RECEPT.	
		011-6809-000-599	18-8771
Calibration Board, Drawing 347 × 132	BOARD	Completely Assembled Calibration Board	5347-189
CAPACITORS			
	C1	0.0047UF, 100V	04-5570
	C2	0.047UF, 100V	04-5565
POTENTIOMETERS			
	R1	10K, RECORDER	09-6787
	R2	100K, HV	09-6813
	R3	1M, X1	09-6814
	R4	1M, X10	09-6814
	R5	2M, X100	09-6834
	R6	250K, X1000	09-6819
	R7	10K, DISCRIMIINATOR	09-6787

	Reference	Description	Part Number
RESISTOR			
	R9	680, 1/3W	12-7885
RESISTOR NETWORK			
	RN1	10K	12-7720
MISCELLANEOUS			
	P6	CONN 1-640457-1 MTA100	13 8397
Wiring Diagram, Drawing 347 × 230			
	S1	46206-LR SLIDE	08-6523
SWITCHES	S2	PA-1002	08-6543
	S3	7101-SYZ-QE	08-6511
	S4	HV (#923 SWITCHCRAFT)	08-6518
	S5	BAT (#923 SWITCHCRAFT)	08-6518
	S6	ALARM (#923 SWITCHCRAFT)	08-6518
	S7	RESET (30 1 PB GRAYHILL)	08-6517
POTENTIOMETERS			
	R1	10K, VOLUME	09-6753
	R2	100K, ALARM SET	09-6795
CONNECTORS			
	J1	MAIN BOARD 5347-293, 3 PIN SIP (CONN 640428-3 MTA 156)	13-8124
	J2	MAIN BOARD 5347-293, 12 PIN SIP (CONN 1-640441-2)	13-8431
	J3	MAIN BOARD 5347-293, 10 PIN SIP (CONN 1-640441-0MTA 100)	13-8197
	J4	ACRECEP (RECPT-AC W/FUSE)	13-8427
	J5	"D" CONN, 9 PIN (RECPT-RD9F000V3 9P)	13-8003
	J6	CALIBRATION BOARD 5347-189, 11 PIN SIP (CONN 1-640441-1 MTA 100)	13-8161
	J7	FLYING LEAD TO MAIN BOARD 5347-293 (RECPT-UG706)	13-7751

	Reference	Description	Part Number
AUDIO			
	DS2	UNIMORPH (TEC3526PU)	21-9251
BATTERY			
	B1	6V (PS610 GELL CELL)	21-9385
TRANSFORMER			
	T1	P6465	22-9908
MISCELLANEOUS			
	F1	1 AMP (FUSE #312001 AGC-1)	21-9277
	DS1	PILOT (LAMP-RED)	21-9296
	DS3	ALARM (BULB #338)	21-9307
	*	LAMP HOLDER	
		101-8430-09-201	21-9410
	M1	M177 METER	4173-166
	*	KNOB PKG-50B	08-6601
	*	KNOB-407D2KI	08-6604
	*	KNOB-LOCK KL 701	08-6607
	*	KNOB-70-1-2G	08-6637

Section 11

Drawings

MAIN BOARD FOR HOYT 1mA/1K MOVEMENT, Drawing 347 × 227

MAIN BOARD (HOYT 1mA/1K) Component Layout, Drawing 347 × 228

CALIBRATION BOARD, Drawing 347 × 132

CALIBRATION BOARD Component Layout, Drawing 347 × 133

WIRING DIAGRAM FOR HOYT 1mA/1K MOVEMENT, Drawing 347 × 230

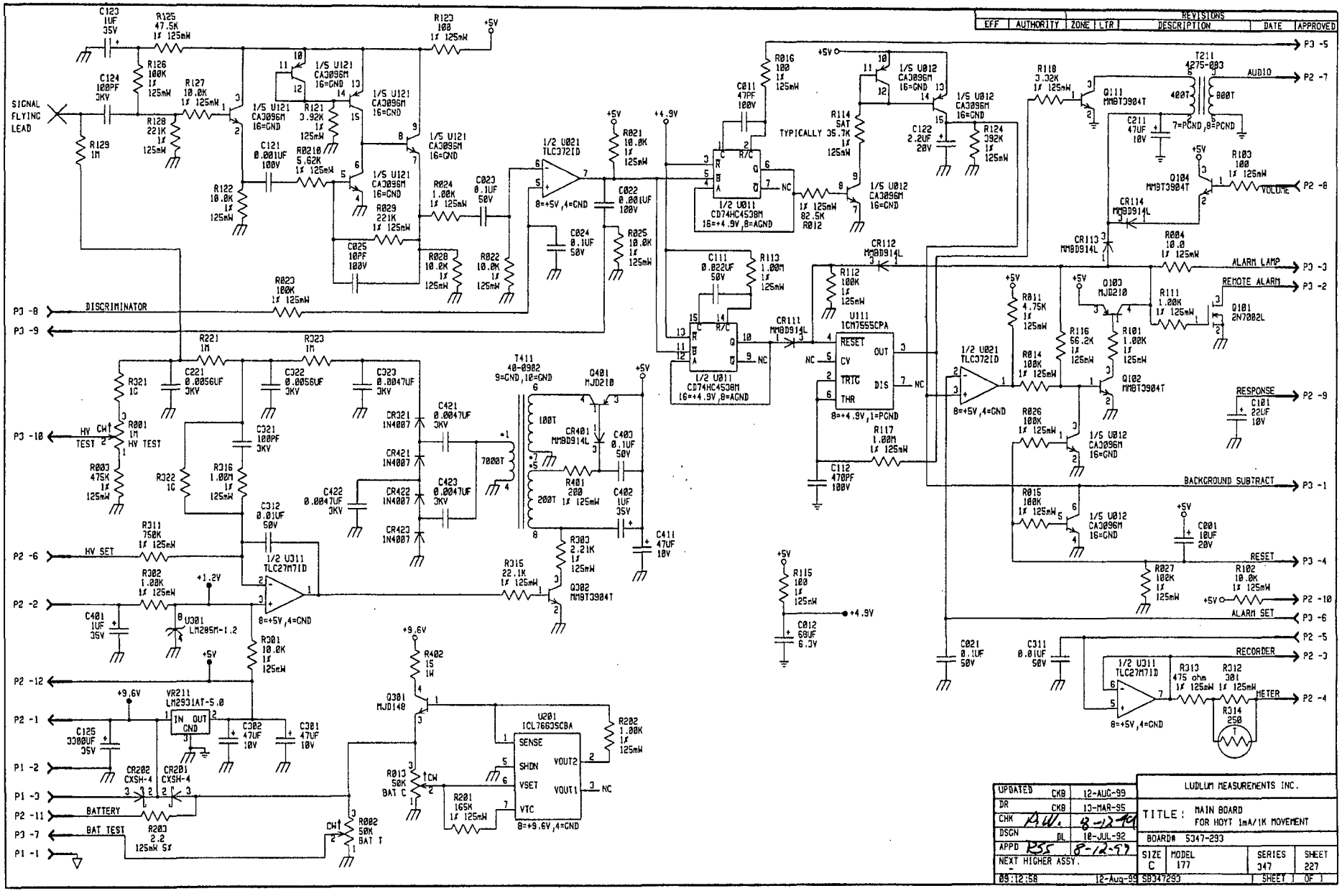
REVISIONS
EFF | AUTHORITY | ZONE | LTR | DESCRIPTION | DATE | APPROVED
SIGNAL FLYING LEAD
DISCRIMINATOR
HV TEST
HV SET
BATTERY
BAT TEST
AUDIO
VOLUME
ALARM LAMP
REMOTE ALARM
RESPONSE
BACKGROUND SUBTRACT
RESET
ALARM SET
RECORDER
METER
TYPICALLY 35.7K
LUDLUM MEASUREMENTS INC.
TITLE: MAIN BOARD
FOR HOYT 1mA/1K MOVEMENT
BOARD# 5347-293
UPDATED CKB 12-AUG-99
DR CKB 13-MAR-95
CHK 8-12-99
DSGN DL 10-JUL-92
APPD 8-12-99
NEXT HIGHER ASSY.
SIZE C
MODEL 177
SERIES 347
SHEET 227
SHEET 1 OF 1
09:12:58 12-Aug-99
SB347293

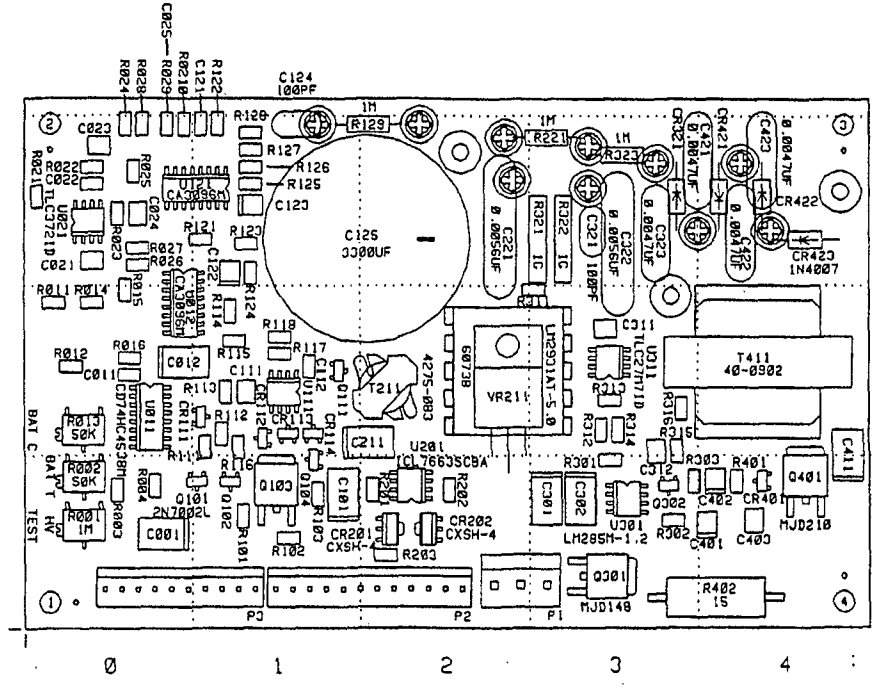

LUDLUM MEASUREMENTS INC. SHEETWATER, TX.				
DR CKB	03/13/95	TITLE: MAIN BOARD (HOYT 1mA/1K)		
CHK P.W.	2/13/97	BOARD# 5347-293		BS347293
DSGN DL	07/10/92	MODEL 177	SERIES 347	SHEET 228
APP JGW	2/13/97	COMP ARTWORK ☐	SLDR ARTWORK ☐	
11:40:25	17-mar-95	COMP OUTLINE ☒	SLDR OUTLINE ☐	
COMP PASTE ☐	COMP MASK ☐	SLDR PASTE ☐	SLDR MASK ☐	

REVISIONS						
EFF	AUTHORITY	ZONE	LTR	DESCRIPTION	DATE	APPROVED

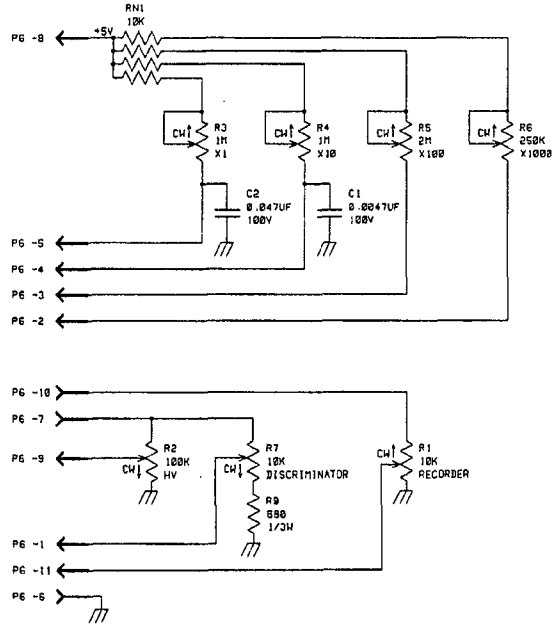

UPDATED -	/ /	LUDLUM MEASUREMENTS INC.
DR CKB	10/28/92	TITLE: CALIBRATION BOARD
CHK DW	6.10.93	
DSGN -	/ /	BOARD# 5347-189
APPD JGW	6/10/93	SIZE D · MODEL 177 · SERIES 347 · SHEET 132
NEXT HIGHER ASSY. -		
14:18:53	10-Jun-93	5B347189 · SHEET 1 OF 1

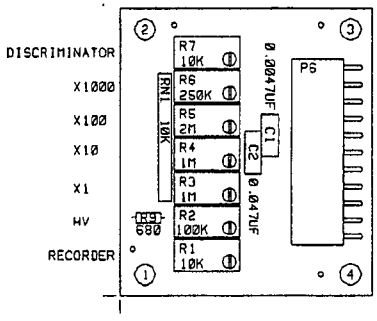

LUDLUM MEASUREMENTS INC. SWEETWATER, TX.					
DR CKB	10/20/92	TITLE : CALIBRATION BOARD			
CHK DW	10 AP93	BOARD# 5J47-189			85J47189
DSGN -	/ /	MODEL 177	SERIES 347	SHEET 133	
APP JGW	6-10-93				
14:19:19	10-Jun-93	COMP SIDE ☐	SLDR SIDE ☐	OUTLINE ☒	
COMP PASTE ☐	COMP MASK ☐	SLDR PASTE ☐	SLDR MASK ☐		

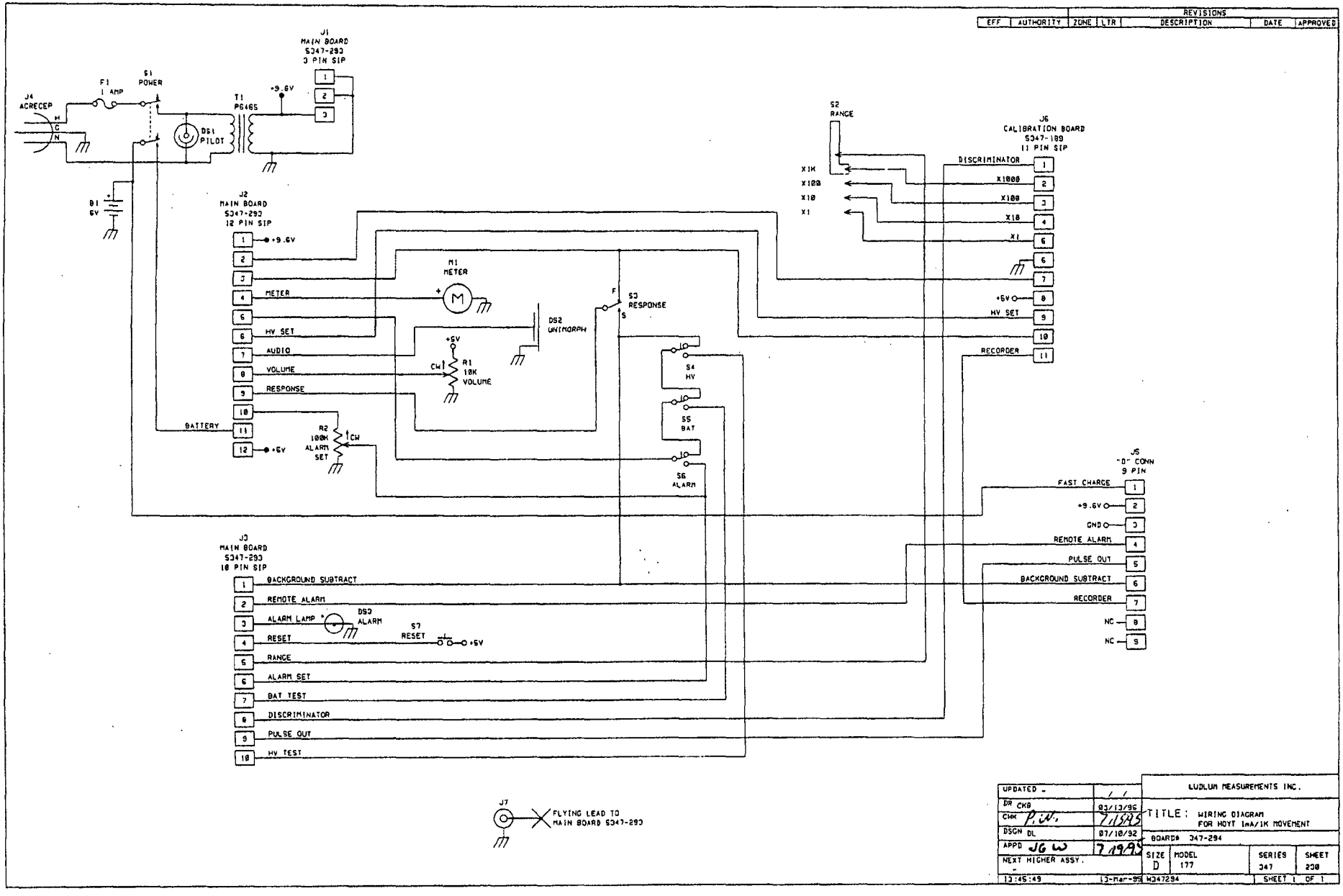
REVISIONS
EFF | AUTHORITY | ZONE | LTR | DESCRIPTION | DATE | APPROVED
J1 MAIN BOARD 5347-293 3 PIN SIP
J4 ACRECEP
F1 1 AMP
S1 POWER
T1 P6465
+9.6V
DS1 PILOT
B1 6V
J2 MAIN BOARD 5347-293 12 PIN SIP
+9.6V
METER
HV SET
AUDIO
VOLUME
RESPONSE
BATTERY
+6V
M1 METER
DS2 UNIMORPH
+5V
R1 10K VOLUME
CW
R2 100K ALARM SET
S3 RESPONSE
S4 HV
S5 BAT
S6 ALARM
S2 RANGE
X1K
X100
X10
X1
J6 CALIBRATION BOARD 5347-189 11 PIN SIP
DISCRIMINATOR
X1000
X100
X10
X1
+6V
HV SET
RECORDER
J5 "D" CONN 9 PIN
FAST CHARGE
+9.6V
GND
REMOTE ALARM
PULSE OUT
BACKGROUND SUBTRACT
RECORDER
NC
NC
J3 MAIN BOARD 5347-293 10 PIN SIP
BACKGROUND SUBTRACT
REMOTE ALARM
ALARM LAMP
DS3 ALARM
RESET
S7 RESET
+5V
RANGE
ALARM SET
BAT TEST
DISCRIMINATOR
PULSE OUT
HV TEST
J7
FLYING LEAD TO MAIN BOARD 5347-293
UPDATED -
DR CKB 03/13/95
CHK P.W. 7/19/95
DSGN DL 07/10/92
APPD JG W 7/19/95
NEXT HIGHER ASSY. -
13:45:49 13-Mar-95
LUDLUM MEASUREMENTS INC.
TITLE: WIRING DIAGRAM FOR HOYT 1mA/1K MOVEMENT
BOARD# 347-294
SIZE D
MODEL 177
SERIES 347
SHEET 200
W347294
SHEET 1 OF 1

LUDLUM MODEL 19
MICRO R METER

November 2005

Serial Number 207422 and Succeeding

Serial Numbers

LUDLUM MEASUREMENTS, INC.
501 OAK STREET, P.O. BOX 810
SWEETWATER, TEXAS 79556
325-235-5494, FAX: 325-235-4672

REV#	ALTERATIONS	DATE	BY
1	VALID	3-16-04	DDW

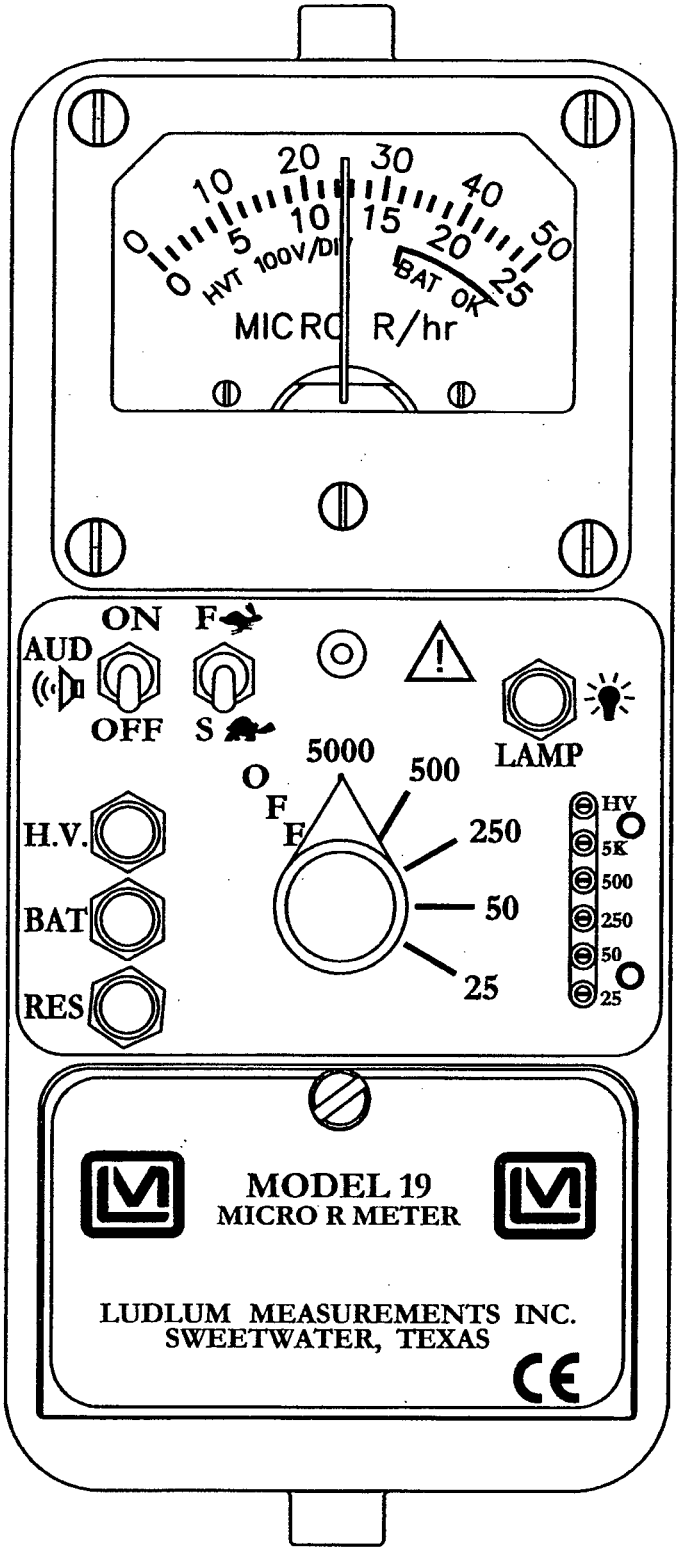

DWN	DATE	CHK	DATE	APP	DATE
DDW	3-16-04		3-18-04		3-18-04

DWG NUM: 4367-169.IAM

SCALE: FULL ☒ OTHER

TITLE: M 19 FRONT PANEL

LUDLUM MEASUREMENTS, INC.
501 OAK STREET
SWEETWATER, TEXAS 79556

SERIES	SHEET
367	169

Table of Contents

Introduction **1**

Getting Started **2**

Unpacking and Repacking **2-1**

Battery Installation **2-1**

Operational Check **2-2**

Maintenance **2-3**

Recalibration **2-3**

Batteries **2-3**

Specifications **3**

Identification of Controls and Functions **4**

Safety Considerations **5**

Environmental Conditions for Normal Use **5-1**

Warning Markings and Symbols **5-1**

Cleaning and Maintenance Precautions **5-2**

Troubleshooting **6**

Troubleshooting Electronics which utilize a Scintillation Detector **6-1**

Technical Theory of Operation **7**

Detector **7-1**

Input **7-1**

Amplifier **7-1**

Discriminator **7-1**

Audio **7-2**

Scale Ranging **7-2**

Digital Analog Converter **7-2**

Meter Drive **7-2**

Fast/Slow Time Constant **7-2**

Low Voltage Supply **7-2**

High Voltage Test **7-2**

High Voltage Supply **7-3**

Recycling **8**

Parts List **9**

Model 19 Micro R Meter **9-1**

Main Board, Drawing 367 × 166 **9-1**

Wiring Diagram, Drawing 367 × 174 **9-4**

Drawings and Diagrams **10**

Section 1

Introduction

The Ludlum Model 19 Micro R Meter utilizes an internally-mounted 1" × 1" NaI(T1) scintillator for optimum performance in locating and measuring low-level (near "background") gamma radiation.

The unit features a pushbutton lighted meter and was designed to be moisture and dust resistant. The meter is housed in a rugged aluminum bezel with waterproof seals. All controls, including a calibration potentiometer for each range, are located on the front panel. Front panel switches are rubber-booted to seal out moisture and dust. A high voltage (HV) test control is provided to allow rapid plateau testing of the detector.

Five range divisions are provided in the 0-5000 micro R/hr spectrum. The meter face is made up of two scales, 0-50 and 0-25, plus battery test. The 0-50 scale corresponds to the 50, 500 and 5000 positions on the range selector switch. The 0-25 scale corresponds to the 25 and 250 positions on the range selector switch.

The instrument is capable of using either standard "D" cell flashlight batteries or nickel-cadmium rechargeable batteries. However, the Model 19 does not include circuitry for recharging the batteries. The two "D" cell batteries are located in an isolated compartment, easily accessible from the front panel.

The Model 19 NaI scintillator is energy sensitive. An energy response curve is included in section 10 of this manual for further reference.

Section 2

Getting Started

Unpacking and Repacking

Remove the calibration certificate and place it in a secure location. Remove the instrument and accessories (batteries, cable, etc.) and ensure that all of the items listed on the packing list are in the carton. Check individual item serial numbers and ensure calibration certificates match. The Model 19 serial number is located on the front panel below the battery compartment. Most Ludlum Measurements, Inc. detectors have a label on the base or body of the detector for model and serial number identification.

Important!

If multiple shipments are received, ensure that the detectors and instruments are not interchanged. Each instrument is calibrated to specific detectors, and therefore not interchangeable.

To return an instrument for repair or calibration, provide sufficient packing material to prevent damage during shipment. Also provide appropriate warning labels to ensure careful handling. Include detector(s) and related cable(s) for calibration. Include brief information as to the reason for return, as well as return shipping instructions:

- **Return shipping address**
- **Customer name or contact**
- **Telephone number**
- **Description of service requested and all other necessary information**

Battery Installation

Ensure the Model 19 power switch is in the "OFF" position. Open the battery lid by pushing down and turning the quarter-turn thumbscrew counterclockwise ¼ turn. Install two "D" size batteries in the compartment.

Note the (+) and (-) marks inside the battery door. Match the battery polarity to these marks. Close the battery box lid, push down and turn the quarter-turn thumb screw clockwise ¼ turn.

Note:

Center post of a flashlight battery is positive. The batteries are placed in the battery compartment in opposite directions.

Operational Check

Turn the Range Selector switch to the "25" position. Depress the "BAT" pushbutton switch and ensure that the meter needle falls within the "BAT OK" marks. Check for a proper background reading. A typical reading would be: 5-15 uR/hr

Turn the Range Selector switch to the "5000" position. Expose the instrument to a "check source" and verify that the instrument indicates within 20% of the check source reading obtained during the last calibration.

Switch the "AUD ON/OFF" switch to the "ON" position and confirm that the external unimorph speaker produces an audible click for each event detected. The "AUD ON/OFF" switch will silence the audible clicks if in the "OFF" position. It is recommended that the "AUD ON/OFF" switch be kept in the "OFF" position when not needed in order to preserve battery life.

Turn the Range Selector switch to the "250" position and increase the source activity for a meter reading of 10-100 uR/hr. While observing the meter fluctuations, select between the fast and slow response time ("F/S") positions to observe variations in the display. The "S" position should respond approximately 5 times slower than the "F" position.

Note:

The slow response position is normally used when the instrument is displaying low numbers which require a more stable meter movement. The fast response position is used at high rate levels.

Check the meter reset function by depressing the "reset" pushbutton switch and ensuring the meter needle drops to "0".

Depress the "LAMP" pushbutton switch. Ensure that the meter face illuminates when the switch is depressed. Proceed to use the instrument.

Maintenance

Instrument maintenance consists of keeping the instrument clean and periodically checking the batteries and the calibration. The Model 19 instrument may be cleaned with a damp cloth (using only water as the wetting agent). Do not immerse instrument in any liquid. Observe the following precautions when cleaning:

1. Turn the instrument off and remove the batteries.
2. Allow the instrument to sit for 1 minute before accessing internal components.

Recalibration

Recalibration should be accomplished after any maintenance or adjustment of any kind has been performed on the instrument. Battery replacements are not considered maintenance and do not normally require instrument recalibrated.

Note:

Ludlum Measurements, Inc. recommends recalibration at intervals no greater than one year. Check the appropriate regulations to determine required recalibration intervals.

Ludlum Measurements offers a full service repair and calibration department. We not only repair and calibrate our own instruments but most other manufacturer's instruments. Calibration procedures are available upon request for customers who choose to calibrate their own instruments.

Batteries

The batteries should be removed any time the instrument is placed into storage. Battery leakage may cause corrosion on the battery contacts, which must be scraped off and/or washed using a paste solution made from baking soda and water. Use a spanner wrench to unscrew the battery contact insulators,

exposing the internal contacts and battery springs. Removal of the handle will facilitate access to these contacts.

Note:

Never store the instrument over 30 days without removing the batteries. Although this instrument will operate at very high ambient temperatures, battery seal failure may occur at temperatures as low as 100°F.

Section 3

Specifications

Linearity: Reading within ± 10% of true value.

High Voltage: Variable from 400 to 1500 Vdc; electronically regulated to within ± 1%.

Battery Dependence: Instrument calibration change less than 3% within the meter battery check limits.

Power: Two standard alkaline "D" cell batteries, secured in an isolated compartment.

Battery Life: Expected lifetime of approximately 2000 hours with the "AUD ON/OFF" switch in the off position.

Audio Output: Built-in unimorph speaker and "ON/OFF" switch provided on the front panel.

Counting Ranges: Two-scale meter face presenting 0-50 micro R/hr with full scale range positions of 5000, 500 and 50; and 0-25 micro R/hr with full scale range positions of 250 and 25.

Meter: 1 mA, 2 ½ -inch scale, pivot-and-jewel suspension.

Detector: Photomultiplier coupled to a 1" × 1" NaI(Tl) crystal, mounted inside the instrument housing.

Construction: Cast and drawn aluminum with computer-beige powdercoating finish and printed membrane front panel.

Size: 15.75 cm (6.2") H × 8.9 cm (3.5") W × 21.6 cm (8.5") L, not including instrument handle.

Weight: 1.36 kg (3 lbs.), less detector and batteries.

Section 4

Identification of Controls and Functions

Range Selector Switch: A six-position switch marked OFF, 5000, 500, 250, 50 and 25. Moving the range selector switch to one of the range positions (5000, 500, 250, 50, 25) provides the operator with an overall range of 0-5000 micro R/hr. Note that the range positions 5000, 500 and 50 are screened in black and correspond to the meter scale screened in black. The range positions 250 and 25 are screened in red and correspond to the meter scale screened in red.

AUD ON-OFF Toggle Switch: In the ON position, operates the unimorph speaker, located on the left side of the instrument. The frequency of the clicks is relative to the rate of the incoming pulses. The higher the rate is, the higher the audio frequency. The audio should be turned OFF when not required, to reduce battery drain.

F-S Toggle Switch: Provides meter response. Selecting the fast, "F", position of the toggle switch provides 90% of full scale meter deflection in four seconds. In the slow, "S", position, 90% of full scale meter deflection takes 22 seconds. In "F" position, there is fast response and large meter deviation. The "S" position should be used for slow response and damped, meter deviation.

BAT Pushbutton Switch: When depressed, this switch indicates the battery charge status on the meter. The range selector switch must be out of the OFF position.

RES Pushbutton Switch: When depressed, this switch provides a rapid means to drive the meter to zero.

LAMP Pushbutton Switch: When depressed, this switch lights the meter face.

HV Pushbutton Switch: When depressed, the meter reads the detector high voltage. Each meter division is equivalent to 100 volts.

HV Adjustment: Provides a means to vary the high voltage from 400 to 1500 volts.

Range Calibration Adjustments: Recessed potentiometers located under the calibration cover, on the right side of the front panel. These adjustment controls allow individual calibration for each range multiplier.

Section 5

Safety Considerations

Environmental Conditions for Normal Use

Indoor or outdoor use

No maximum altitude

Temperature range of –20°C to 50°C (–4°F to 122°F)

Maximum relative humidity of less then 95% (non-condensing)

Pollution Degree 1 (as defined by IEC 664).

Warning Markings and Symbols

Caution!

The operator or responsible body is cautioned that the protection provided by the equipment may be impaired if the equipment is used in a manner not specified by Ludlum Measurements, Inc.

The Model 19 Micro R Meter is marked with the following symbols:

CAUTION (per ISO 3864, No. B.3.1) – designates hazardous live voltage and risk of electric shock. During normal use, internal components are hazardous live. This instrument must be isolated or disconnected from the hazardous live voltage before accessing the internal components. This symbol appears on the front panel. **Note the following precautions:**

Warning!

The operator is strongly cautioned to take the following precautions to avoid contact with internal hazardous live parts that are accessible using a tool:

1. Turn the instrument power OFF and remove the batteries.
2. Allow the instrument to sit for 1 minute before accessing internal components.

The "**crossed-out wheelie bin**" symbol notifies the consumer that the product is not to be mixed with unsorted municipal waste when discarding; each material must be separated. The symbol is placed on the battery compartment lid. See section 8, "Recycling" for further information.

Cleaning and Maintenance Precautions

The Model 19 may be cleaned externally with a damp cloth, using only water as the wetting agent. Do not immerse the instrument in any liquid. Observe the following precautions when cleaning or performing maintenance on the instrument:

1. Turn the instrument OFF and remove the batteries.
2. Allow the instrument to sit for 1 minute before cleaning the exterior or accessing any internal components for maintenance.

Section 6

Troubleshooting

Occasionally, you may encounter problems with your LMI instrument or detector that may be repaired or resolved in the field, saving turnaround time and expense in returning the instrument to us for repair. Toward that end, LMI electronics technicians offer the following tips for troubleshooting the most common problems. Where several steps are given, perform them in order until the problem is corrected. Keep in mind that with this instrument, the most common problems encountered are: (1) sticky meters (2) battery contacts.

Note that the first troubleshooting tip is for determining whether the problem is with the electronics or with the detector. A Ludlum Model 500 Pulser is invaluable at this point, because of its ability to simultaneously check high voltage, input sensitivity or threshold, and the electronics for proper counting.

We hope these tips will prove to be helpful. As always, please call if you encounter difficulty in resolving a problem or if you have any questions.

Troubleshooting Electronics which utilize a Scintillation Detector

SYMPTOM	POSSIBLE SOLUTION
No power (or meter does not reach BAT TEST or BAT OK mark)	1. Check batteries and replace if weak. 2. Check polarity (See marks inside batter lid). Are the batteries installed backwards?

SYMPTOM	POSSIBLE SOLUTION
No power (or meter does not reach BAT TEST or BAT OK mark) (continued)	3. Check battery contacts. Clean them with rough sandpaper or use an engraver to clean the tips.
	4. Check for loose or broken wires, especially between the main board and the calibration board.
Nonlinear Readings	1. Check the high voltage (HV) by pressing the HV TEST button. If a Multimeter is used to check the HV, ensure that one with high impedance is used, as a standard Multimeter could be damaged in this process.
	2. Check for "sticky" meter movement. Does the reading change when you tap the meter? Does the meter needle "stick" at any spot?
	3. Check the "meter zero." Turn the power OFF. The meter should come to rest on "0".
Meter goes full-scale or "Pegs Out"	1. Check the HV and, if possible, the input threshold for proper setting.
	2. Check for loose wires, especially between the main board and the calibration board.

Section 7

Technical Theory of Operation

Detector

The detector consists of a crystal of sodium iodide with Thallium activation (NaI Tl) that gives off light pulses when penetrated by radiation photons.

The light pulses are converted to electrical pulses by the photo cathode of the photomultiplier tube. The photomultiplier includes a 9 stage electron amplifier. This amplifier utilizes an electrostatic field for each stage, adding up to a required 500 to 1500 volt supply.

Input

Detector pulses are coupled from the detector through C6 to the amplifier. CR1 protects the amplifier from input shorts. R37 couples the detector to the high voltage supply.

Amplifier

A self-biased amplifier provides gain in proportion to R15 and C4 divided by R14. Transistor (pin 3 of U4) provides amplification. U6 is configured as a current mirror to provide a load for pin 3 of U4. The output self-biases to 2 Vbe (approximately 1.4 volts) at emitter of Q1. This provides just enough bias current through pin 3 of U4 to conduct all of the current from the current mirror.

Positive pulses at R16 are coupled to the discriminator through C5.

Discriminator

Comparator U8 provides discrimination. The discriminator is set by the voltage divider, R21 and R23, coupled to pin 3 of U8. U8 output pulses are coupled to pin 5 of U9A for meter drive and pin 12 of U9B for audio.

Audio

Discriminator pulses are coupled to univibrator pin 12 of U9B. Front panel audio ON-OFF selector controls the reset at pin 13 of U9B. When ON, pulses from pin 10 of U9B turn on oscillator U12, which drives the can-mounted unimorph. Speaker tone is set by R31, C14; duration by R22, C7.

Scale Ranging

Detector pulses from the discriminator are coupled to univibrator pin 5 of U9A. For each scale, the pulse width of pin 6 of U9A is controlled by the front panel calibration controls and their related capacitors. This arrangement allows the same current to be delivered to C9 in proportion to the meter reading.

Digital Analog Converter

U5 is configured as a current mirror. For each pulse of current through R24, an equal current is delivered to C9. This charge is drained off by R25. The voltage across C9 is proportional to the incoming count rate.

Meter Drive

The meter is driven by the collector of Q2 coupled as a voltage follower in conjunction with pin 1 of U10.

For Battery Test, the voltage follower is bypassed and the meter movement is directly coupled to the battery through R8.

Fast/Slow Time Constant

For slow time constant, C17 is switched from the output of the meter drive to parallel C9.

Low Voltage Supply

Battery voltage is coupled to U11 and associated components (a switching regulator) to provide 5 volts at pin 8 to power all circuits.

High Voltage Test

A constant current is developed by collector of Q3 in proportion to HV signal at pin 1 of U17. U16 provides a current mirror to drive the meter

through analog switch logic circuit U15, U14, and U3.

High Voltage Supply

High voltage is developed by switching regulator U13 and T1. Voltage multiplier CR3 thru CR7, and associated components, develop the detector voltage. Voltage feedback is provided by R39 thru U17 to feed back pin 8 of U13 for voltage regulation. Pin 1 of U17 is proportional to the high voltage, and its output is also utilized to measure the high voltage. High voltage is adjusted by varying the feedback current with R42.

Section 8

Recycling

Ludlum Measurements, Inc. supports the recycling of the electronics products it produces for the purpose of protecting the environment and to comply with all regional, national and international agencies that promote economically and environmentally sustainable recycling systems. To this end, Ludlum Measurements, Inc. strives to supply the consumer of its goods with information regarding reuse and recycling of the many different types of materials used in its products. With many different agencies, public and private, involved in this pursuit it becomes evident that a myriad of methods can be used in the process of recycling. Therefore, Ludlum Measurements, Inc. does not suggest one particular method over another, but simply desires to inform its consumers of the range of recyclable materials present in its products, so that the user will have flexibility in following all local and federal laws.

The following types of recyclable materials are present in Ludlum Measurements, Inc. electronics products, and should be recycled separately. The list is not all-inclusive, nor does it suggest that all materials are present in each piece of equipment:

Batteries	Glass	Aluminum and Stainless Steel
Circuit Boards	Plastics	Liquid Crystal Display (LCD)

Ludlum Measurements, Inc. products which have been placed on the market after August 13, 2005 have been labeled with a symbol recognized internationally as the "crossed-out wheelie bin" which notifies the consumer that the product is not to be mixed with unsorted municipal waste when discarding; each material must be separated. The symbol will be placed near the AC receptacle, except for portable equipment where it will be placed on the battery lid.

The symbol appears as such:

Section 9

Parts List

	Reference	Description	Part Number
Model 19 Micro R Meter	UNIT	Completely Assembled Model 19 Micro R Meter	48-1615
Main Board, Drawing 367 × 166	BOARD	Completely Assembled Circuit Board	5367-166
CAPACITORS	C1	47pF, 100V	04-5660
	C2	0.0022µF, 50V	04-5676
	C3	0.001µF, 100V	04-5659
	C4	10pF, 100V	04-5673
	C5	0.01µF, 50V	04-5664
	C6	100pF, 3KV	04-5735
	C7	0.022µF, 50V	04-5667
	C8	1µF, 16V	04-5701
	C9	10µF, 25V	04-5655
	C10	100pF, 100V	04-5661
	C11	68µF, 10V	04-5654
	C12	10µF, 25V	04-5728
	C14	470pF, 100V	04-5668
	C17	47µF, 10V	04-5666
	C18-C27	0.01µF, 500V	04-5696
	C28	0.001µF, 2KV	04-5703
	C29	68µF, 10V	04-5654
	C30-C31	1µF, 16V	04-5701
	C32	270pF, 100V	04-5679
	C33	0.01µF, 50V	04-5664

	Reference	Description	Part Number
TRANSISTORS	Q1	MMBT3904LT1	05-5841
	Q2	MMBT4403LT1	05-5842
	Q3	MMBT3904LT1	05-5841
VOLTAGE REGULATOR	VR1	LT1460KCS3-2.5TR	05-5867
INTEGRATED CIRCUITS	U1-U3	MAX4542ESA	06-6453
	U4-U5	CMXT3904	05-5888
	U6	CMXT3906	05-5890
	U7	MAX4541ESA	06-6452
	U8	MAX985EUK-T	06-6459
	U9	CD74HC4538M	06-6297
	U10	LMC7111BIM5X	06-6410
	U11	LT1304CS8-5	06-6434
	U12	MIC1557BM5	06-6457
	U13	LT1304CS8	06-6394
	U14-U15	MAX4542ESA	06-6453
	U16	CMXT3906	05-5890
	U17-C18	LMC7111BIM5X	06-6410
DIODES	CR1	CMPD2005S	07-6468
	CR2	CMSH1-40M	07-6411
	CR3-CR7	CMPD2005S	07-6468
	CR9	CMSH1-40M	07-6411
SWITCHES	SW1	RANGE SELECTOR	08-6761
	SW2	H.V. PUSHBUTTON	08-6770
	SW3	F-S TOGGLE	08-6781
	SW4	AUD ON-OFF TOGGLE	08-6781
	SW5	RES PUSHBUTTON	08-6770
	SW6	LAMP PUSHBUTTON	08-6770
	SW7	BAT PUSHBUTTON	08-6770
POTENTIOMETERS / TRIMMERS	R33	1M, 64W105 NAME	09-6814
	R34	1M, 64W105 X10	09-6814
	R35	1M, 64W105 X1	09-6814
	R36	1M, 64W105 X0.1	09-6814
	R41	100K, 64W104 X100	09-6813

	Reference	Description	Part Number
	R42	100K, 64W104 HV ADJ	09-6813
	R52	10K, 3266X1-103 NAME	09-6822
RESISTORS			
	R1-R5	200K, 1/8W, 1%	12-7992
	R6	8.25K, 1/8W, 1%	12-7838
	R7	10K, 1/8W, 1%	12-7839
	R8	2.37K, 1/8W, 1%	12-7861
	R9-R11	10K, 1/8W, 1%	12-7839
	R12	200 Ohm, 1/8W, 1%	12-7846
	R13	10K, 1/8W, 1%	12-7839
	R14	4.75K, 1/8W, 1%	12-7858
	R15	200K, 1/8W, 1%	12-7992
	R16	10K, 1/8W, 1%	12-7839
	R17	1K, 1/8W, 1%	12-7832
	R18	4.75K, 1/8W, 1%	12-7858
	R19	2K, 1/8W, 1%	12-7926
	R20-R21	100K, 1/4W, 1%	12-7834
	R22	1M, 1/8W, 1%	12-7844
	R23	2.49K, 1/8W, 1%	12-7999
	R24	14.7K, 1/8W, 1%	12-7068
	R25	200K, 1/4W, 1%	12-7992
	R26	100K, 1/4W, 1%	12-7834
	R27	68.1K, 1/8W, 1%	12-7881
	R28	100K, 1/8W, 1%	12-7834
	R29	1K, 1/8W, 1%	12-7832
	R30	100K, 1/8W, 1%	12-7834
	R31	475K, 1/8W, 1%	12-7859
	R32	100K, 1/8W, 1%	12-7834
	R37	100K, 1/8W, 1%	12-7834
	R38	4.75M, 1/8W, 1%	12-7995
	R39	500M, 3KV, 2%	12-7031
	R40	1M, 1/4W, 1%	12-7844
	R44	1K, 1/4W, 1%	12-7832
	R45	8.25K, 1/8W, 1%	12-7838
	R46-R48	200K, 1/4W, 1%	12-7992
	R49	825K, 1/8W, 1%	12-7005
	R50	953K, 1/8W, 1%	12-7950
	R53	1K, 1/4W, 1%	12-7832
CONNECTORS			
	P1	CONN-640456-4	
		MTA100x4 NAME	13-8088

	Reference	Description	Part Number
	P2	CONN-640456-3 MTA100x3 NAME	13-8081
	P3	CONN-640456-2 MTA100x2 NAME	13-8073
	P4	CONTACT #1434 NAME	18-9124
INDUCTOR			
	L1	22µH, CD43-220	21-9808
TRANSFORMER			
	T1	31032R	21-9925
Wiring Diagram, Drawing 367 × 174			
AUDIO	DS1	M19 LAMP BOARD 5367-113	5367-113
	DS2	UNIMORPH TEC-3526-PU	21-9251
CONNECTOR			
	P1	MTA100x4 MAIN BOARD 5367-166	13-8170
	P2	MTA 100x3 MAIN BOARD 5367-166	13-8135
	P3	MTA 100x2 MAIN BOARD 5367-166	13-8178
BATTERY			
	B1-B2	DURACELL "D"	21-9313
MISCELLANEOUS			
	*	M19 INTERNAL DETECTOR	47-3426
	*	TUBE/XTAL ASSY	2004-061
	M1	MODEL 19 METER ASSY 987010-001 1mA	4367-024
	*	M19 METERFACE (202-016)	7367-023
	*	METER BEZEL W/ GLASS W/ SCREWS	4363-352-00
	*	METER MOVEMENT (1mA)	15-8030
	*	M19 BATTERY BOX LID W/CNTCT	2363-191
	*	DEEP PORTABLE CAN ASSY	4363-615
	*	M19 CASTING	7367-171
	*	M19 MAIN HARNESS	8367-170

Reference	Description	Part Number
*	PORTABLE KNOB	08-6613
*	SWITCH SEAL (P/B)	08-6611
*	UNIMORPH W/WIRES, O'RING	40-0034
*	CAL COVER W/SCREWS	4363-200
*	HANDLE- PORTABLE (GRIP)	7363-139

Section 10

Drawings

Model Board Circuit, Drawing 367 × 166 (4 sheets)

Model Board Component Layouts, Drawings 367 × 167 (2 sheets)

Wiring Diagram, Drawing 367 × 174

Energy Response for Ludlum Model 19

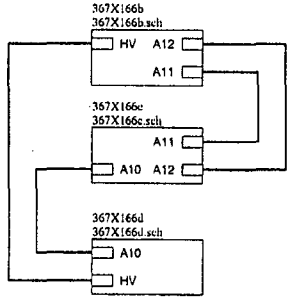

LUDLUM MEASUREMENTS, INC.
PO Box 810
501 Oak Street
Sweetwater, Texas 79556
U.S.A. 1-800-622-0828

Drawn: JK	04-MAR-04	Title: MAIN BOARD	
Design: DL	04-MAR-04	Model: M19	
Check:		Board#: 5367-166	
Approve:	31 Mar 04	Sheet: 1 of 4	Series 367 / Sheet 166
11:08:49	31-Mar-2004	Rev: 4.0	
367x166a.sch			

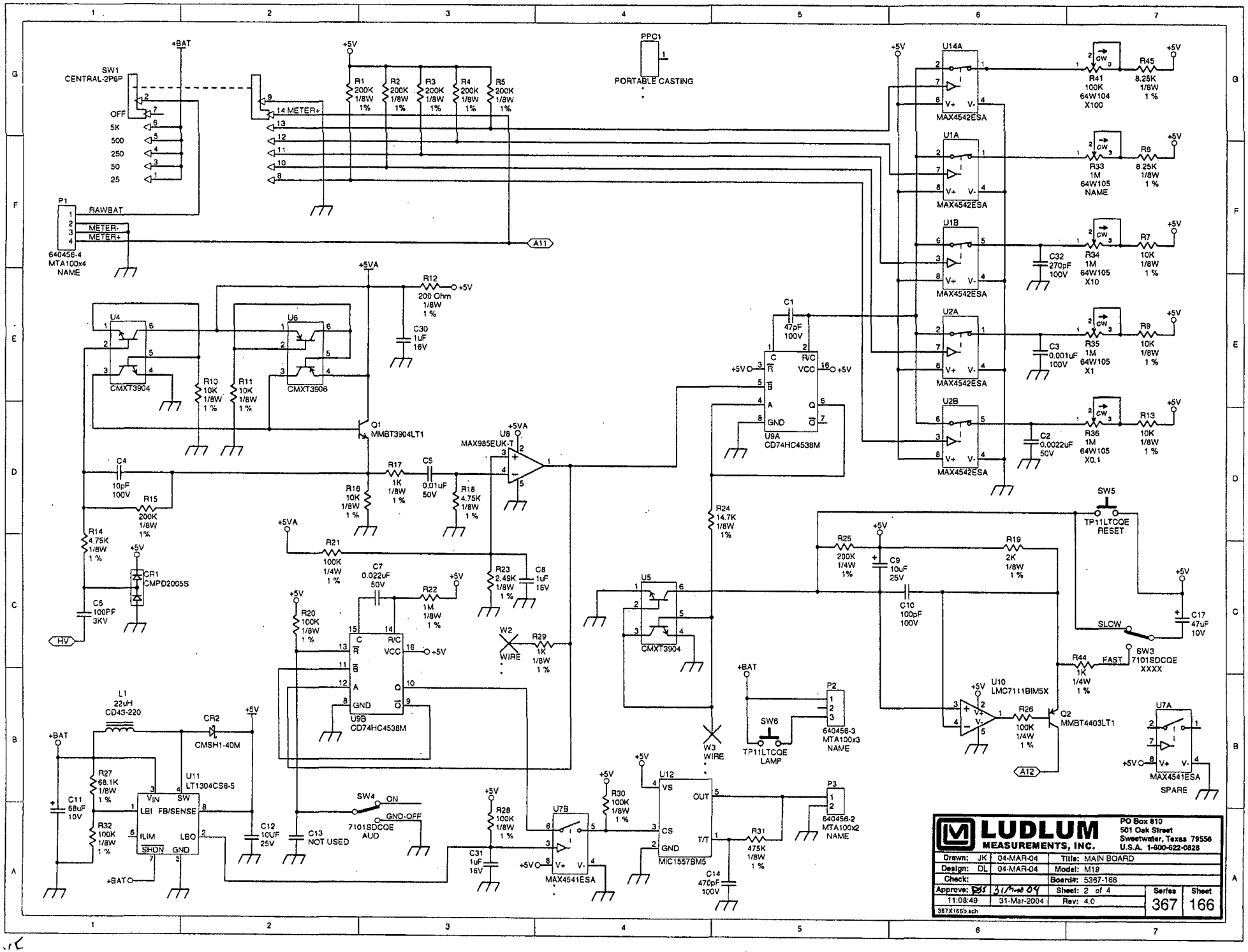
SW1
CENTRAL-2P6P
OFF
5K
500
250
50
25
+BAT
+5V
14 METER+
R1 200K 1/8W 1%
R2 200K 1/8W 1%
R3 200K 1/8W 1%
R4 200K 1/8W 1%
R5 200K 1/8W 1%
PPC1
PORTABLE CASTING
P1
RAWBAT
METER-
METER+
640458-4
MTA100x4
NAME
A11
U14A
U1A
U1B
U2A
U2B
MAX4542ESA
R41 100K 64W104 X100
R33 1M 64W105 NAME
R34 1M 64W105 X10
R35 1M 64W105 X1
R36 1M 64W105 X0.1
R45 8.25K 1/8W 1 %
R6 8.25K 1/8W 1 %
R7 10K 1/8W 1 %
R9 10K 1/8W 1 %
R13 10K 1/8W 1 %
C32 270pF 100V
C3 0.001uF 100V
C2 0.0022uF 50V
+5VA
R12 200 Ohm 1/8W 1 %
C30 1uF 16V
U4
U6
CMXT3904
CMXT3906
R10 10K 1/8W 1 %
R11 10K 1/8W 1 %
Q1 MMBT3904LT1
C1 47pF 100V
U9A
CD74HC4538M
R/C
VCC
GND
U8
MAX985EUK-T
C4 10pF 100V
R15 200K 1/8W 1%
R14 4.75K 1/8W 1 %
CR1 CMPD2005S
C5 100PF 3KV
HV
R17 1K 1/8W 1 %
C5 0.01uF 50V
R16 10K 1/8W 1 %
R18 4.75K 1/8W 1 %
R21 100K 1/4W 1 %
C7 0.022uF 50V
R22 1M 1/8W 1 %
R20 100K 1/8W 1 %
R23 2.49K 1/8W 1 %
C8 1uF 16V
W2 WIRE
R29 1K 1/8W 1 %
U9B
CD74HC4538M
R24 14.7K 1/8W 1%
W3 WIRE
U5
CMXT3904
R25 200K 1/4W 1%
C9 10uF 25V
C10 100pF 100V
R19 2K 1/8W 1 %
SW5
TP11LTCQE
RESET
C17 47uF 10V
SLOW
SW3
7101SDCQE
XXXX
FAST
R44 1K 1/4W 1 %
U10
LMC7111BIM5X
R26 100K 1/4W 1 %
Q2 MMBT4403LT1
A12
P2
640456-3
MTA100x3
NAME
SW6
TP11LTCQE
LAMP
U7A
MAX4541ESA
SPARE
L1 22uH CD43-220
CR2 CMSH1-40M
C11 68uF 10V
R27 68.1K 1/8W 1 %
R32 100K 1/8W 1 %
U11
LT1304CS8-5
VIN
SW
LBI
FB/SENSE
ILIM
LBO
SHDN
GND
C12 10uF 25V
C13 NOT USED
SW4
ON
GND-OFF
7101SDCQE
AUD
R28 100K 1/8W 1 %
C31 1uF 16V
U7B
MAX4541ESA
R30 100K 1/8W 1 %
U12
MIC1557BM5
VS
OUT
CS
T/T
R31 475K 1/8W 1 %
C14 470pF 100V
P3
640456-2
MTA100x2
NAME
LUDLUM MEASUREMENTS, INC.
PO Box 810
501 Oak Street
Sweetwater, Texas 79556
U.S.A. 1-800-622-0828
Drawn: JK 04-MAR-04
Design: DL 04-MAR-04
Check:
Approve: 31 Mar 04
11:08:49 31-Mar-2004
387X166b.sch
Title: MAIN BOARD
Model: M19
Board#: 5367-166
Sheet: 2 of 4
Rev: 4.0
Series 367
Sheet 166

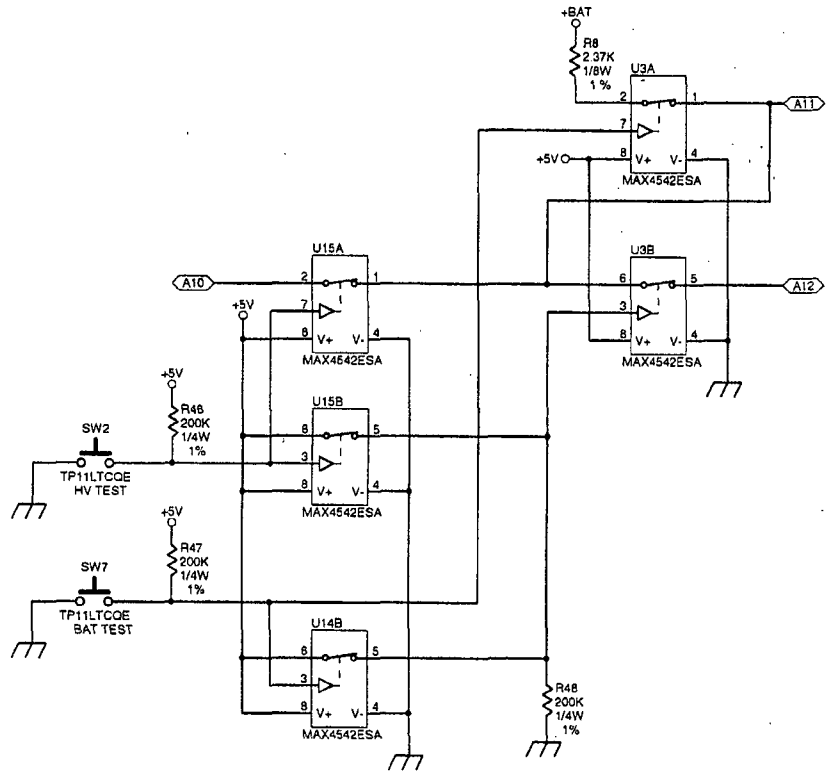

LUDLUM MEASUREMENTS, INC.

PO Box 810
501 Oak Street
Sweetwater, Texas 79556
U.S.A. 1-800-622-0828

Drawn: JK	04-MAR-04	Title: MAIN BOARD	
Design: DL	04-MAR-04	Model: M19	
Check:		Board#: 5387-166	
Approve:	31 Mar 04	Sheet: 3 of 4	Series 367 / Sheet 166
11:08:50	31-Mar-2004	Rev: 4.0	

367K166c.sch

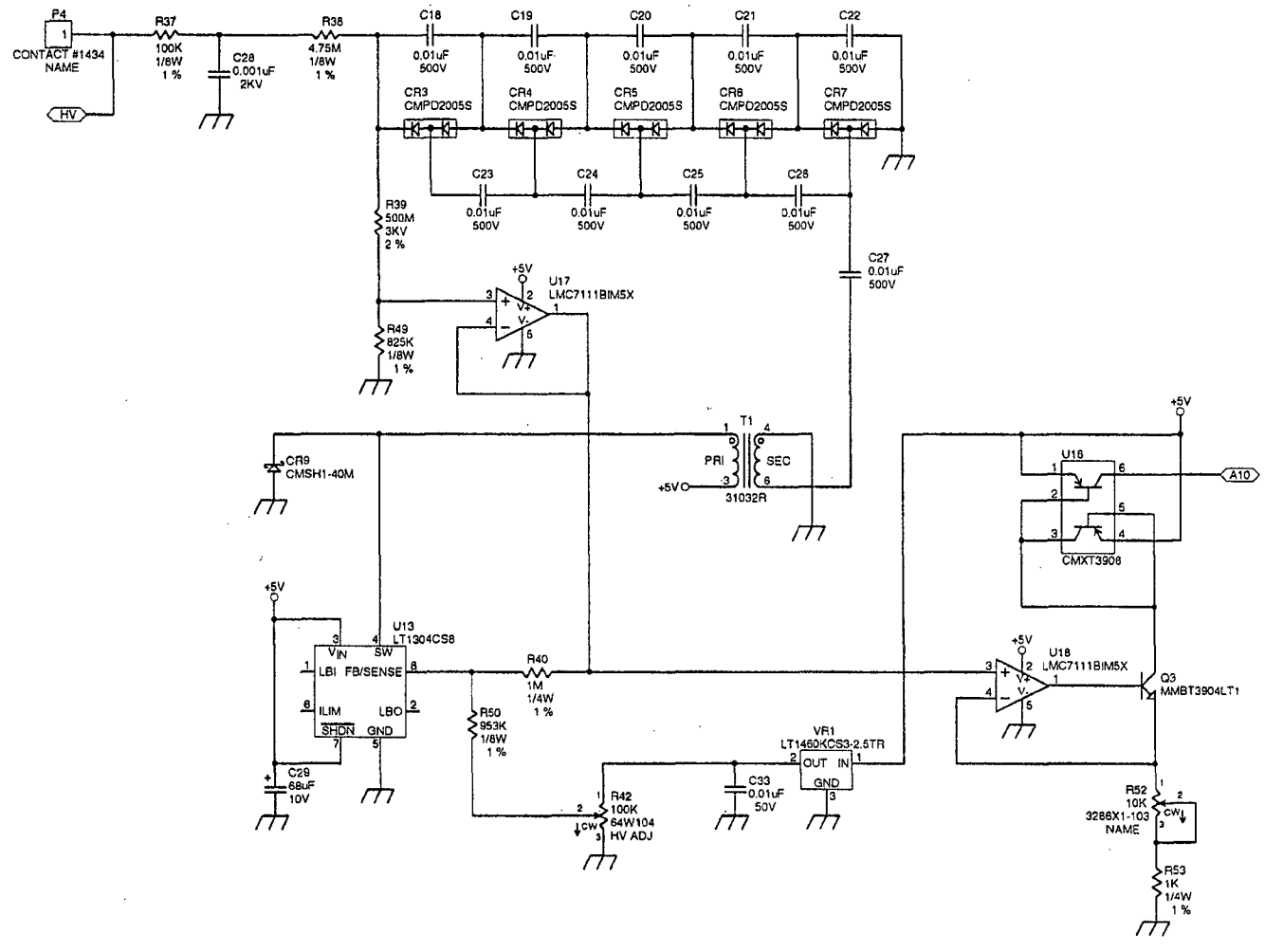

LUDLUM MEASUREMENTS, INC.

PO Box 810
501 Oak Street
Sweetwater, Texas 79556
U.S.A. 1-800-622-0828

Drawn: JK	04-MAR-04	Title: MAIN BOARD			
Design: DL	04-MAR-04	Model: M19			
Check:		Board#: 5367-166			
Approve:	31Mar04	Sheet: 4 of 4	Series	Sheet	
11:08:51	31-Mar-2004	Rev: 4.0	367	166	
367X166d.sch					

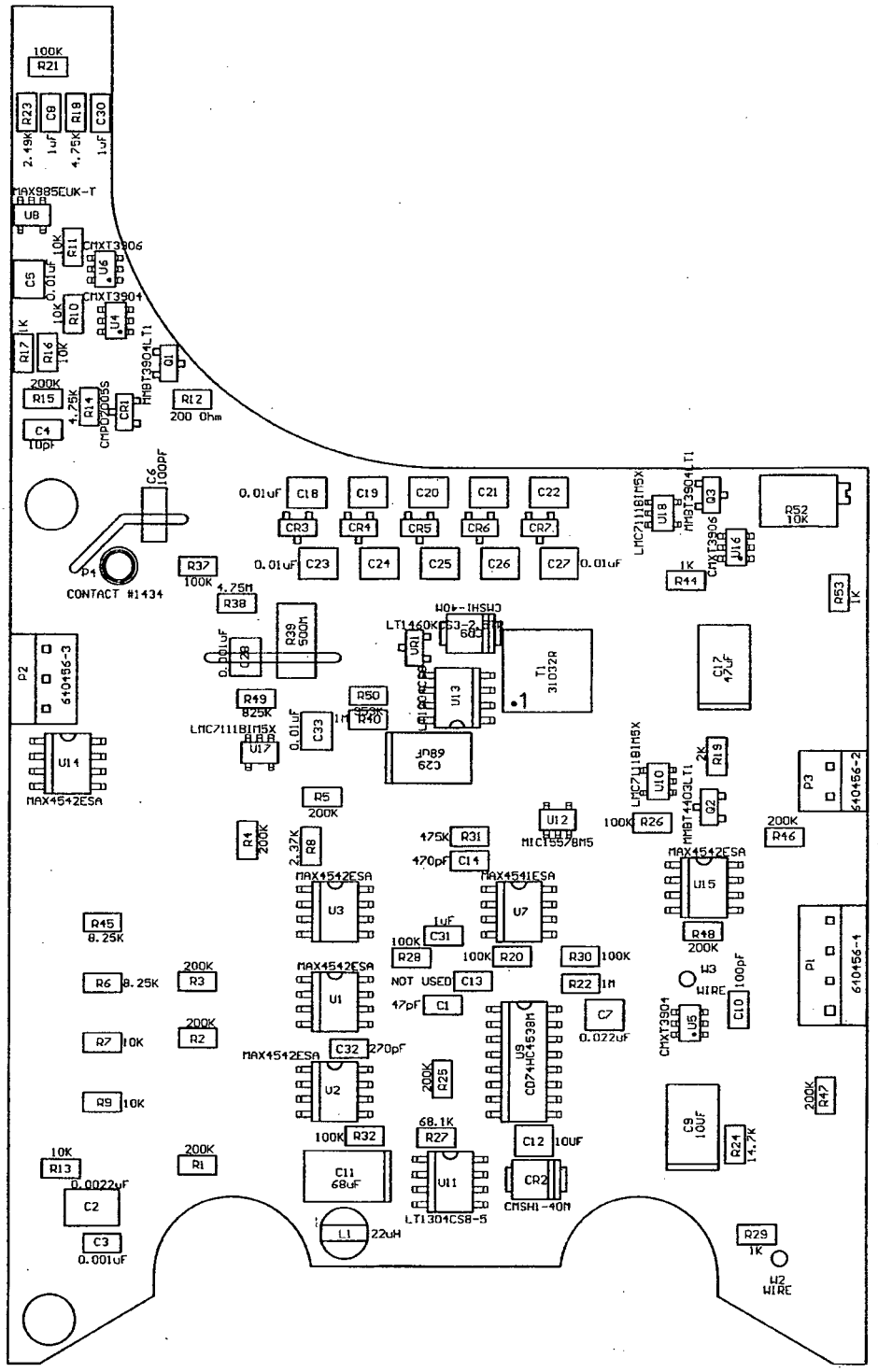

Drawn: JK	04-MAR-04	Title: MAIN BOARD			
Design: DL	04-MAR-04				
Check: DL	06-MAR-04	Model: M19			
Approve:		Board#: 5367-166			
Layer:		Rev: 4.0	Series	Sheet	
	14:46:39 6-Apr-2004	SCALE: 1.75	367	167	

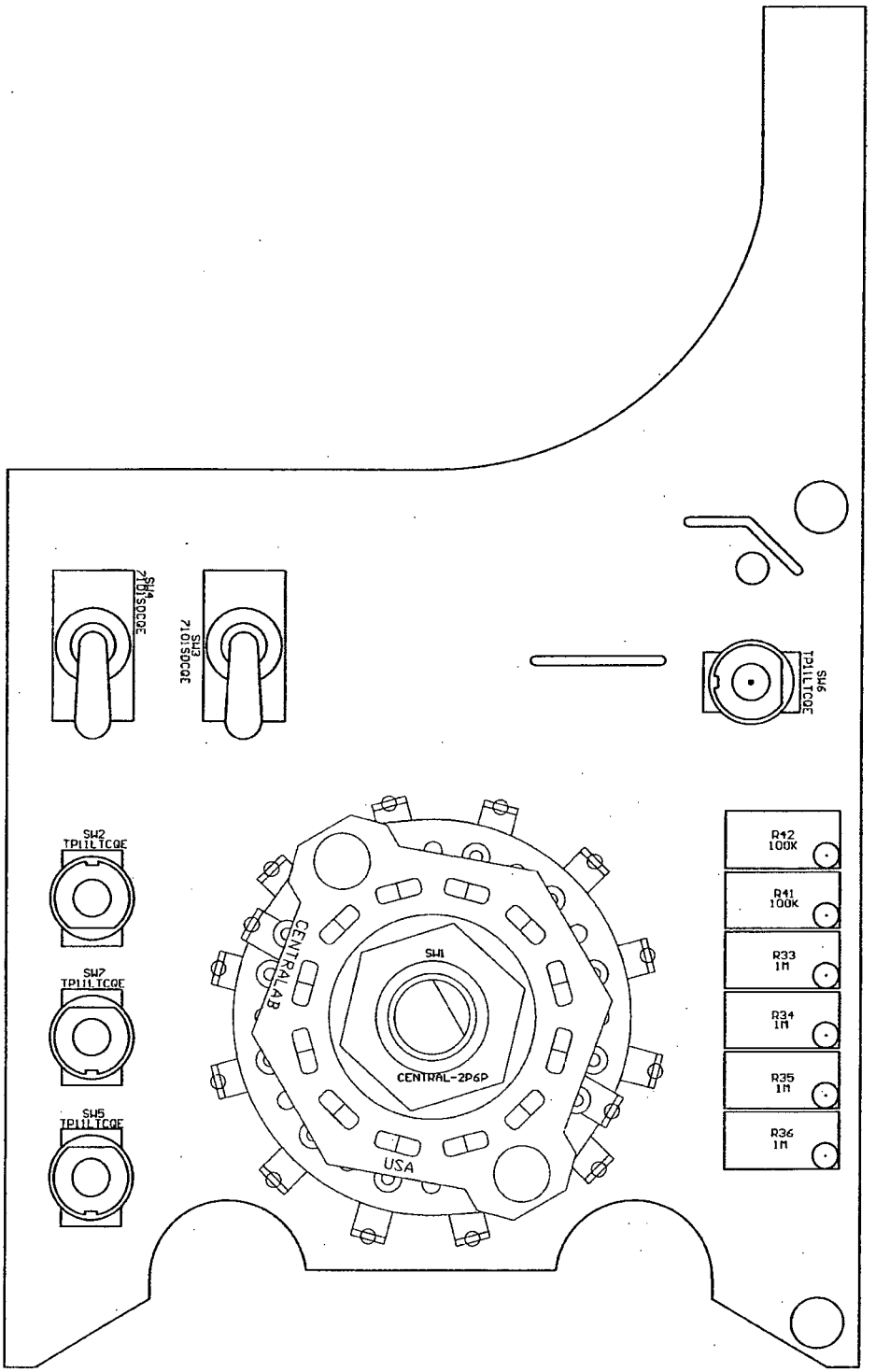

Drawn: JK	04–MAR–04	Title: MAIN BOARD			
Design: DL	04–MAR–04				
Check: DL	06-MAR-04	Model: M19			
Approve:		Board#: 5367–166			
Layer:		Rev: 4.0	Series	Sheet	
	14:46:40 6–Apr–2004	SCALE: 1.75	367	167	

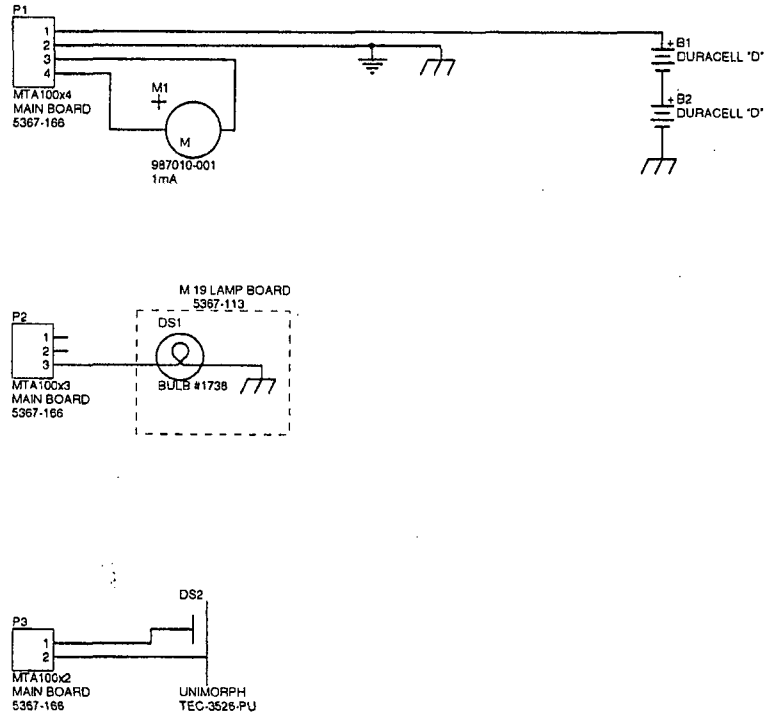

LUDLUM MEASUREMENTS, INC.		PO Box 810 501 Oak Street Sweetwater, Texas 79556 U.S.A. 1-800-622-0828	
Drawn: MEB	02-APR-04	Title: WIRING DIAGRAM	
Design: DL	02-APR-04	Model: 19	
		Board#: 367-174	
Approve: RJS	12 APR 04	Sheet: 1 of 1	Series 367 / Sheet 174
10:25:34	7-Apr-2004	Rev:	
367x174			

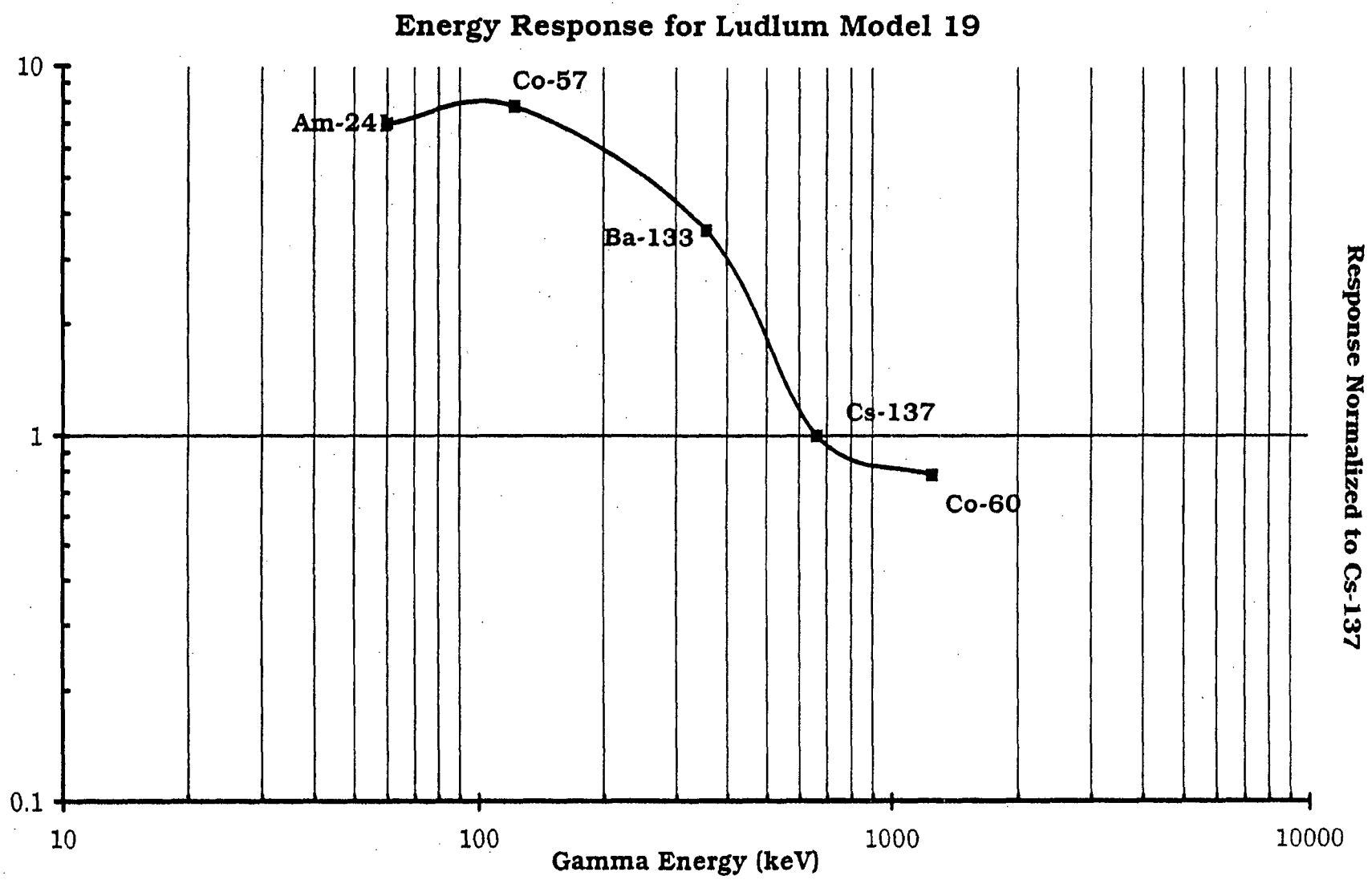
Energy Response for Ludlum Model 19
10
1
0.1
Am-241
Co-57
Ba-133
Cs-137
Co-60
10
100
1000
10000
Gamma Energy (keV)
Response Normalized to Cs-137

LUDLUM MODEL 2221
PORTABLE SCALER RATEMETER

Revised January 2002

Serial Number 161568 and
Succeeding Serial Numbers

LUDLUM MEASUREMENTS, INC.
501 OAK ST., P.O. BOX 810
SWEETWATER, TX 79556
915/235-5494 FAX: 915/235-4672

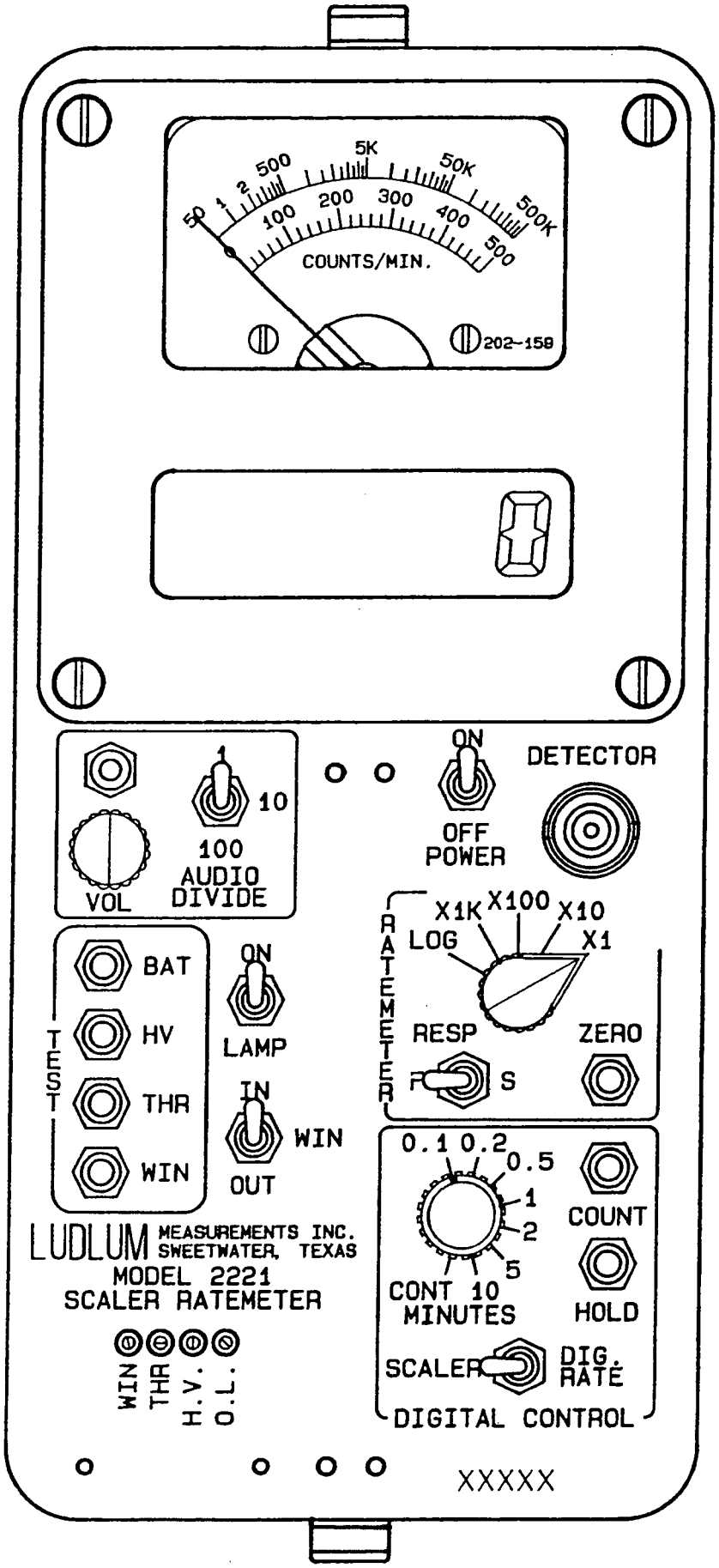

CHG	NO.				DWN	CHK	APP
DWN PW	DATE 5/31/89	CHK	DATE	APP	DATE		
TOL: SHOP STD ☐ OTHER			SCALE: FULL ☐ OTHER				
TITLE MODEL 2221 PORTABLE SCALER							
LUDLUM MEASUREMENTS, INC. 501 OAK STREET SWEETWATER, TEXAS 79556			SERIES 281		SHEET 74		

M2221 Portable Scaler Ratemeter
January 2002

TABLE OF CONTENTS

1. GENERAL 1

2. SPECIFICATIONS 1

3. DESCRIPTION OF CONTROLS AND FUNCTIONS 2
4. OPERATING PROCEDURES 4

   4.1 Initial Preparation 4
   4.2 Operating Point 4
   4.3 Limitation of Controls 4

5. DETERMINING INSTRUMENT PLATEAU AND SELECTING OPERATING POINT 5

6. WINDOW OPERATION AND ENERGY CALIBRATION PROCEDURES 5

7. OVERLOAD DETECTION CALIBRATION 6

8. CALIBRATION 6
   8.1 Ratemeter Calibration 6
   8.2 TEST Pushbutton/Display Calibration 7
   8.3 High Voltage Calibration 7
   8.4 Threshold/Gain Calibration 7

9. OVERHAUL PROCEDURE 8
   9.1 Amplifier/Power Supply Board 8
   9.2 Processor Board Checkout 9
   9.3 Functional/Chassis Checkout 11

PARTS LIST 13

   Amplifier/Power Supply Board, Drawing 261 X 56 13
   Processor Board, Drawing 261 X 91 15
   Calibration Board, Drawing 261 X 59 15
   LCD Display Board, Drawing 261 X 58 16
   Backplane Board, Drawing 261 X 60 16
   Chassis Wiring Diagram, Drawing 261 X 61 16

DRAWINGS AND DIAGRAMS 17

RS-232 PORT ADDITION ADDENDUM 18
   RS-232 Board, Drawing 261 X 179 19

1. GENERAL

The Ludlum Model 2221 Portable Scaler Ratemeter is a self-contained counting instrument designed for operation with scintillation, proportional or G-M detectors. Power is derived from four flashlight batteries.

The unit is complete with a voltage-sensitive preamplifier, linear amplifier, electronic timer, detector high-voltage power supply and detector overload detection circuitry.

A single channel analyzer is also featured in this unit for use in gamma spectrum analysis. The analyzer may be switched on or off, allowing gross or window counting.

The unit has a combination four-decade linear and log ratemeter and a six-digit LCD readout for the scaler and digital ratemeter. Potentiometers are supplied for threshold, window and high-voltage controls.

2. SPECIFICATIONS

- **HIGH VOLTAGE**: 200 to 2400 volts with digital readout

- **BATTERY COMPLEMENT**: four each "D" cell flashlight batteries

- **BATTERY LIFE**: approximately 250 hours with size D, alkaline batteries

- **CALIBRATION STABILITY**: less than 3% variance to battery endpoint

- **SENSITIVITY**: voltage-sensitive and adjustable from 1.5 mV to 100 mV; typically factory-calibrated to 10 mV = 100 on the THR display

- **INPUT IMPEDANCE**: 22k

- **READOUT**: 6 digit liquid crystal display, 0.5" (1.3cm) characters with backlight selection

- **METER**: 2 1/2-inch scale, 1 mA, pivot and jewel suspension

- **SCALES/RANGE**: four decade log ratemeter ranging from 50 to 500k CPM; four decade linear ratemeter - 0-500 CPM meter dial with range multipliers of X1K, X100, X10, X1 producing an overall range of 0-500k CPM

- **OPERATING TEMPERATURE**: 5-122°F (-15 to 50°C)

- **LINEARITY**: ±10% of the true value for the analog and digital ratemeter; ±2% of the true value for the digital Scaler, HV, THR, and WIN digital voltmeter readings; ±4% of the true value for the BAT voltmeter reading

- **RESPONSE**: 2 positions - Fast response = 4 ±1 second, Slow response = 22 ± 2 second; all response times are measured from 10-90% of final reading

- **CALIBRATION CONTROLS**: recessed screwdriver adjustments with calibration cover

- **AUDIO**: built-in unimorph speaker with click-per-event and switch selectable divide by 1, 10, and 100.

- **CONNECTOR**: Series "C"

- **SIZE**: 4.25" (10.8 cm)W X 10" (25.4cm) L X 9" (22.9cm) H including handle

3. DESCRIPTION OF CONTROLS AND FUNCTIONS

- **POWER**: Two-position switch to turn power to instrument on or off

- **DETECTOR**: series "C" connector for detector

  Input Impedance: 22k

  Ballast Resistor: 1M

- **RATEMETER**:

  - **F-S RESP Switch**: Two-position switch for selecting ratemeter response: F position 4 ±1 second; S position 22 ±2 seconds.

  - **ZERO**: when pressed, resets the ratemeter

  - **RANGE SELECTOR**: Five-position switch labeled LOG, X1K, X100, X10, X1 used to select the analog ratemeter range. The LOG position selects the upper meter scale to provide a four decade logarithmic reading from 50-500k CPM. The X1, X10, X100, and X1K range multipliers used with the lower 0-500 CPM meter scale providing and overall measuring range from 0-500k CPM. Multiply the meter reading by the respective range position.

- **DIGITAL CONTROL**:

  - **COUNT Pushbutton**: When pressed, resets and starts the counter. While the counter is counting, two colons on the display are turned on.
  - **HOLD Pushbutton**: When pressed, stops the counter and leaves the count in the display.

  - **SCALER/DIG RATE Toggle Switch**: Two-position toggle switch for selecting scaler or digital ratemeter

    SCALER Position: The display shows the counter contents.

    DIG. RATE Position: The display shows the ratemeter count rate.

    ✓ Note: The scaler and digital ratemeter are active even when not selected. This allows the user to start a timed count, switch to the Digital Ratemeter and then switch back to Scaler without having to restart the counter.

  - **MINUTES Selector Switch**: Eight-position switch used for selecting the count times for the Scaler:

POSITION	COUNT TIME IN MINUTES
0.1	0.1
0.2	0.2
0.5	0.5
1	1
2	2
5	5
10	10
CONT	

COUNTER COUNTS UNTIL HOLD IS PRESSED

- **CALIBRATION CONTROLS**:

  - **WIN**: 20-turn potentiometer used to adjust window width when the window toggle switch, WIN, is in the "IN" position

  - **THR**: 20-turn potentiometer used to adjust the Threshold

- **HV**: 20-turn potentiometer used to adjust detector voltage

- **O.L.**: 20-turn potentiometer used to adjust detector overload current

- TEST:

- **BAT Pushbutton Switch**: When pressed, displays the battery voltage in the digital display.

- **HV Pushbutton Switch**: When pressed, displays the detector high voltage in the digital display.

- **THR Pushbutton Switch**: When pressed, displays the Threshold setting in the digital display.

- **WIN Pushbutton Switch**: When pressed, displays the window setting in the digital display.

- **LAMP Toggle Switch**: Two-position switch to turn on the display lights.

- **WIN Toggle Switch**: Two- position switch for switching the window IN or OUT

IN position: The SCA is set up as a window counter.
OUT position: The SCA is set up as a gross counter.

- AUDIO:

- **VOL Control**: One-turn potentiometer used to adjust the volume of the speaker or headset.

- **AUDIO DIVIDE**:

"1" Position: provides 1 click per event
"10" Position: provides 1 click per 10 events
"100" Position: provides 1 click per 100 events

- **1/8" PHONE JACK**: Used for headset. When headset is plugged in, the unimorph on the can is disabled.

- **LIQUID CRYSTAL DISPLAY**: Six-1/2" high digits, displaying counter contents or digital count rate

- **STATUS INDICATORS:**

Counter Overflow: When in SCALER mode, the left digit alternates between the correct digit and an "H".

Detector Overload: The display flashes all dashes.

Battery: When the battery voltage is 4.4 volts or less, all decimal points are turned on.

Scaler Counting: The two colons are turned on when MINUTES selector switch is in CONT position.

4. OPERATING PROCEDURES

4.1 Initial Preparation

- Unscrew battery door latch.

- Install for "D" size batteries in the battery holder. The correct position of the batteries is indicated on the bottom of the battery door.

- Switch the POWER ON/OFF switch to the ON position. A random number will first be observed in the display, then 8.8:8.8:8.8. The third displayed number will be the program version. (At the time of this printing, program version is #261010.)

- Press COUNT pushbutton. The display should zero. Two colons should appear on the display.

- Press HOLD pushbutton. The colons should disappear.

- Switch LAMP toggle switch to the ON position. LCD display backlighting and two lamps at the bottom of the analog meter should be illuminated.

✓ NOTE: If the Lamp switch is left in the ON position for extended periods of time, battery life will decrease rapidly.

- Check TEST pushbutton functions for proper operation.

4.2 Operating Point

Instrument and detector operating point is established by setting the probe voltage (HV) and instrument sensitivity (THR). For a given detector system, efficiency, background and noise are fixed by the physical makeup of the detector and rarely vary from unit to unit. However, the selection of the operating point makes a marked difference in the apparent contribution of these three sources of count.

In the singular case of the G-M detector, a minimum operating voltage is required to establish the G-M operating region. (At lower voltages, the detector operates as a very insensitive proportional counter.) This detector is not capable of energy discrimination (pulse-height discrimination). The Threshold (THR) is typically adjusted to 550, with a THR reading of 100 = 10 mV input pulse, for G-M detectors.

For gain sensitive detectors (proportional or scintillation), the most straightforward method of selecting the operating point is to develop a graph, relating count rate to system gain. This relationship is commonly referred to as a plateau or instrument plateau curve. System gain may be changed by adjusting detector high voltage or THR control. The threshold is typically adjusted for 100 = 10 mV for scintillation detectors and 50 (5mV equivalent) on the THR readout for proportional detectors.

4.3 Limitation of Controls

HV Control provides a linear adjustment of the detector voltage supply. The range is approximately 0 to 2400 volts. Changing the detector voltage will cause the detector gain to change. It should be remembered that a linear change in voltage will cause an exponential change in detector gain. THR Control sets the basic pulse discrimination point of the scaler.

WIN Control is calibrated with the THR control so that the reading of the WIN control is equivalent to the reading of the THR control. As an example, 100 on the THR is equal to 100 on the WIN.

5. DETERMINING INSTRUMENT PLATEAU AND SELECTING OPERATING POINT

□ Set WIN ON/OFF to OFF.

□ Set MINUTES switch to 0.1 minutes.

□ Set THR control at 100.

□ With detector shielded from source, turn up high voltage control and take a plot of HV versus background count rate until the detector maximum voltage rating is reached. (Maximum voltage on most scintillation detectors is 1500-1600 Vdc; maximum voltage on proportional detectors is reached at the continuous discharge point. Return HV control to minimum.

□ Expose the detector to a source and again make a plot of voltage versus count.

□ Plot both sets of data and select the operating point to correspond with maximum source count and minimum background count. Avoid areas of very fast count rate changes with small changes in detector voltage. The optimum operating point for low background detectors is just above the inflection point (or break-over point) of the plateau curve. If background count is irrelevant, shift operating point to the plateau center for greater stability.

6. WINDOW OPERATION AND ENERGY CALIBRATION PROCEDURES

■ The following procedure calibrates threshold directly in keV.

□ Place RATEMETER multiplier switch to LOG position.

□ Unscrew and remove CAL cover.

□ Press HV pushbutton. The HV should read out on the display directly in volts. While depressing the HV pushbutton, turn HV potentiometer maximum counterclockwise. The HV should be less than 50 volts.

□ Depress the THR pushbutton. Turn the THR potentiometer clockwise until 652 displays.

□ With WIN IN/OUT switch IN, depress the WIN pushbutton. Turn the WIN potentiometer until 20 appears on the display.

□ Switch WIN IN/OUT to OUT.

□ Connect the probe and expose to Cs137 source.

□ Increase HV (if HV potentiometer is at minimum, it will take approximately 3 turns before any change is indicated). While increasing the HV, observe the log scale of the ratemeter. Increase HV until ratemeter indication occurs.

□ Switch WIN IN/OUT switch to IN.

□ Turn the HV control until maximum reading occurs on the log scale. Increase HV until reading starts to drop off, then decrease the HV for maximum reading.

□ Turn RATEMETER selector switch to the X1K position.

□ Press ZERO pushbutton and release. If meter does not read, switch to a lower range until a reading occurs.

□ Carefully adjust HV potentiometer until maximum reading is achieved on the range scale. The instrument is now peaked for Cs137 on both the LOG and Linear scales.

✓ NOTE: When the THR control is adjusted, the effective window width remains constant. As an example, if the THR is set at 612, the WIN at 100, a 662 keV peak 612 + (100 divided by 2) will be centered in the window. Then the threshold point is equivalent to 612 keV with a 100 keV window and calibrated for 100 keV per turn. Now if the threshold is reduced to 250, the threshold is equivalent to 250 keV, but the window (100) is still equal to 100 keV. Proportionally, this represents a broader window.

7. OVERLOAD DETECTION CALIBRATION

■ Detector Count Saturation is detected in this instrument and is indicated by the LCD display flashing all dashes and the analog ratemeter deflecting full scale. The count saturation or "overload" point is calibrated by the O.L. front panel control.

□ Adjust the O.L. control to fully clockwise position.

□ Connect detector and set HV for correct detector operating voltage.

□ Expose detector to radiation field and while observing ratemeter, increase field intensity until a decrease in count rate is noticed. For alpha scintillators, the detector photomultiplier tube (PMT) should be exposed to a small light leak through the probe face to establish the detector saturation point.

□ With the detector in the count saturation field, adjust the O.L. control counterclockwise until the overload alarm point is reached (flashing dashes in LCD display).

□ Position detector in a lower field intensity just below the saturation point and confirm overload is defeated.

Example: Ludlum Model 44-9 GM pancake detector saturates at approximately 500 mR/hr (5mS/h).

□ Full scale instrument analog meter reading=200 mR/hr (2 mS/h). Set the Model 2221 to overload at 500 mR/hr (5 mS/h) field, then position detector in a 300 mR/hr (3 mS/h) field and confirm that overload alarm is defeated. The O.L. control will have to be "fine adjusted" to perform the above procedure.

8. CALIBRATION

■ Refer to schematic and component layout for the following calibration.

8.1 Ratemeter Calibration

□ Connect Frequency counter to pin 18 of U22 (80C51FA) on Processor board, #5261-073. Confirm crystal frequency is 6 MHz ±0.1% (6,006 khz-5,994 kHz).

□ Set THR control to 100 and Window IN/OUT switch to the OUT position.

☐ Connect Ludlum Model 500 Pulser or equivalent and adjust count rate for 40,000 CPM.

☐ Switch Ratemeter Multiplier switch to the X100 position and the Response switch to "F."

☐ Adjust pulse amplitude above threshold until a steady count rate is observed on ratemeter.

☐ Adjust R40 Meter Cal (labeled MCAL) on Processor board, for 40,000 CPM on meter.

☐ Switch SCALER/DIG RATE switch to the SCALER position.

☐ Confirm counter time operation by taking 0.1 minute count. Colons should be observed during count cycle.

8.2 TEST Pushbutton/Display Calibration

☐ Adjust THR control to fully clockwise position.

☐ Connect positive voltmeter lead to pin 7 of U3 (TLC27M7IP) on the Amp./P.S. board. Connect negative lead to ground near U3.

☐ Press the THR test pushbutton and adjust R171 Volt Cal (labeled "V"), so that the front panel display reading corresponds to the voltmeter reading at pin 7 of U3.

8.3 High Voltage Calibration

☐ Connect HV meter (2500 Megohm input impedance or greater) to the junction of R32 (4.7 Meg) and R33 (1 Meg) on Amp/P.S. board.

☐ While pressing the HV Test pushbutton, adjust the HV front panel control until the display reads 1500.

☐ Adjust R175 HV Cal on Amp/P.S. board for 1500 ±5 volts on external HV meter.

☐ Confirm HV will adjust from 50 to 2400-2500 volts. Insure HV displayed reading tracks within 2% of HV output.

8.4 Threshold/Gain Calibration

☐ Set pulser pulse amplitude to 10mV.

☐ With THR set at 100, on display, fine adjust R174 Gain control (on P.S. board) until ratemeter reads 30,000 CPM with 40,000 CPM from pulser.

☐ Adjust THR control for readings of 200, 300, 400, and 500 to insure the pulser input is 20, 30, 40 and 50mV respectively. Use the 3/4 CPM input setting to discriminate turn on points as in procedure above.

☐ Adjust THR control back to 100.

☐ Switch Window IN/OUT switch to the IN position. Adjust WIN control for 100, 200, 300, 400 and 500 to confirm 20, 30, 40 and 50mV window cut off points.

☐ Set WIN back to 100 and OUT position.

☐ Check the rest of the front panel functions for proper operation.

9. OVERHAUL PROCEDURE

■ The checkout below can be performed with boards in instrument. An extender board (part no. 5261-098) is available if better access to board components is necessary.

9.1 Amplifier/Power Supply Board

□ Connect L.V. power supply to Model 2221 and plug in Amp/P.S. board. (component side to back of instrument).

□ Adjust the WIN, THR and O.L. front panel controls to maximum clockwise position. Turn HV control to maximum counterclockwise position. Switch the lamp switch to the OFF position. Window IN/ OUT switch to the OUT position.

□ Adjust input voltage for approximately +4 Vdc and turn instrument to the ON position. Battery current should be approximately 30 mA or less.

□ Confirm pin 8 of U7 (CA3290A) is equal to or greater than +6.4 Vdc.

□ Increase supply voltage to approximately +5 Vdc and pin 8 of U7 should increase to +9 ±1 Vdc.

□ Check for +5 ±0.15 Vdc at pin 8 of any of the TLC27M7IP's.

□ Check for -6.5 ±0.5 Vdc at pin 4 of any of the same TLC27M7IP's.

□ Connect subminax wire from detector input to Amp/P.S. board.

□ Connect HV meter to detector input and adjust front panel HV control to fully clockwise position.

□ Adjust the HV front panel control to the fully clockwise position. Then adjust R175 HV CAL for approximately 2400-2450 Vdc. Decrease front panel HV control to the fully counterclockwise position and confirm that HV output is 50 volts or less. Then set HV for approximately 1000 Vdc.

□ Connect voltmeter to pin 1 of U3 (TLC27M7IP).

□ With HV output set at approximately 1000 volts adjust R176 Current Cal (labeled "O") for approximately 0.1 Vdc at pin 1 of U3.

□ Connect Overrange Simulator (needs to have a 1000 meg resistor) to detector input and confirm pin 1 of U3 increases to approximately 0.15 ±0.01 Vdc.

□ Connect voltmeter to pin 1 of U2 (LM358) and with Overrange Simulator connected, adjust O.L. control on the front panel counterclockwise until the voltmeter reads approx +0.5 Vdc. Disconnect Simulator and confirm pin 1 of U2 goes above +3 volts.

□ Turn O.L. control to its maximum clockwise position.

□ Connect positive voltmeter lead to pin 7 of U3 (TLC27M7IP) and connect negative lead to ground close to U3.

□ Press the WIN test pushbutton and confirm pin 7 of U3 is approximately 2.7 to 3.8 volts.

□ Press THR test and confirm pin 7 is 1.23 ±0.02 Vdc.

□ Press BAT test pushbutton and confirm pin 7 is approximately 0.5 with supply voltage at +5 Vdc.

□ With the HV still set at 1000 Vdc, pin 7 of U3 should be approximately 1 ±0.1 Vdc while pressing the HV test pushbutton.

□ Connect oscilloscope to pin 3 of U5 (LM331) and adjust R171 Volt Cal (labeled "V") for approximately 2 khz (0.5 millisecond period) with the HV pushbutton pressed.

□ Connect voltmeter to pin 7 of U3 and while pressing the THR test pushbutton, adjust THR control for approximately +0.1 Vdc.

□ Switch the Window IN/OUT switch to the IN position. While pressing the WIN test pushbutton, adjust the WIN control for approximately +0.1 Vdc at pin 7 of U3 also. Then switch the Window to the OUT position.

□ Connect oscilloscope to pin 2 of U8 (CA3096).

□ Connect pulser and set pulse amplitude for approximately 10 millivolts. Set CPM to 40,000.

□ Adjust R174 Gain (labeled "G") to maximum clockwise position and confirm positive pulses at pin 2 of U8 are approximately 1 ± 0.1 volt in amplitude.

□ Connect oscilloscope to pin 10 of U105 (CD4098).

□ Adjust R174 Gain until pulses just start to appear at pin 10 of U105. Then adjust pulser amplitude until pulses are clearly visible.

□ Adjust R173 T Pulse (labeled "T") for a 2.5 microsecond positive pulse width at pin 10 of U105.

□ Connect oscilloscope to pin 7 of U105 and adjust R172 Width (labeled "W") for a 3 microsecond negative pulse width.

□ Switch the Window IN/OUT switch to the IN position and verify that the pulses are present at pin 7 of U105 from 10 to 20 mV input pulse amplitude and off above approximately above 20 mV.

□ Switch Window IN/OUT switch to the OUT position and verify the pulses appear above the window limit as in the above step.

□ Battery current should be less than 30 mA with +5 Vdc supply input.

9.2 Processor Board Checkout

■ The procedure below is to be used without the Amp/P.S. board. If the Amp/P.S. board is used, delete the steps containing the signal generator use. Use the pulser for the standard count rate inputs. Window, Threshold, HV and Bat test will display the control setting.

□ Plug in Amp/P.S. Simulator board and connect Signal Generator to jumper wires (black= probe ground).

□ Plug in Processor board, component side toward back of instrument. Connect display ribbon cable.

□ c. Set Signal Generator to square wave function.

Range= 10k and all other switches to the OUT position.

□ Adjust the Freq. Symmetry, Amplitude and D.C. Offset controls to achieve a 5 volt negative pulse with a pulse width of approximately 50 microseconds and a period of approximately 1.2 milliseconds.

□ With supply voltage set at +5 ±0.15 Vdc, turn instrument ON and observe display= 8.8:8.8:8.8 for approximately 2

seconds, then 261010 indicating the program number.

☐ Connect Frequency Counter to pin 18 of U22 (80C51FA) and confirm crystal frequency is 6 Mhz ±0.1% (6,006 khz-5,994 khz).

☐ Switch the Scaler/Dig. Rate Switch to the Dig Rate position.

☐ Counts should start accumulating every 2 seconds until approximately 50,000 CPM is observed. (The symmetry control can be fine adjusted until 50,000 CPM is achieved). At this displayed count rate, the low BAT Test indication should be observed, indicated by 5 decimal points across the bottom of the display.

☐ Press BAT Test and display should be 4.1 ±0.2.

☐ Press HV and WINDOW= 410 ±20. Threshold pushbutton has no effect without Amp/P.S. plugged in.

☐ Switch Ratemeter Response time to F.

☐ Switch Ratemeter multiply to X100.

☐ Adjust R40 Meter Cal, (labeled MCAL), until Ratemeter matches displayed accumulated count (approximately 50,000 CPM).

☐ Decade the Multiplier range on the Signal Generator to correspond to each decade on Rate Multiplier to confirm range switch operation.

☐ Connect Voltmeter to recorder output and confirm R41 RCDR CAL, (labeled RCAL), will adjust from 0 to approximately 3.7 Vdc, with full scale CPM on display and ratemeter. Then set for 1 Vdc to equal full scale meter deflection.

☐ Connect Oscilloscope to pin 9 of U10 (ICM7556) and decade Sweep Generator down to the 1k range.

☐ Switch the Audio Divide switch between the 1, 10, and 100 positions to confirm Audio frequency divides or multiplies by 10, between each position.

☐ Connect Headset or unimorph and confirm volume control operation.

☐ With full scale meter deflection (500), check F/S response time (90% full scale) for 4.5 ±0.5 seconds and 22 ±2 seconds respectively.

☐ Check Count, Hold, and Zero pushbutton functions.

☐ Switch Scaler/Dig. Rate switch to the Scaler position and check the 0.1, 0.2 and 2 minute time multipliers for correct time operation.

☐ With +5 volts supply input, battery current should be less than approximately 15 mA, with full scale meter deflection.

9.3 Functional/Chassis Checkout

☐ This procedure requires a checked-out Amp/P.S. board and Processor board.

☐ Connect one lead of an ohmmeter to chassis ground.

☐ Connect other lead of ohmmeter to the Processor board cinch connector pins below to check count time switch operation. Boards are not plugged in yet.
1 = open
0 = shorted

COUNT TIME POSITION	PROCESSOR BOARD CINCH CONNECTOR PIN 8	30	31
0.1	0	0	0
0.2	0	0	1
0.5	1	0	0
1	1	0	1
2	0	1	0
5	0	1	1
10	1	1	0
CONT	1	1	1

Connect external power supply and set input voltage for approximately +5 Vdc.

☐ Turn Lamp switch to the OFF position. THR and O.L. controls to maximum clockwise position and HV to maximum counterclockwise position.

☐ Plug in Processor and Amp/P.S. boards and related cable connections.

☐ Turn instrument ON. Current draw should be less than 45 mA.

☐ Confirm display reads 8.8:8.8:8.8 for approximately 2 seconds, then 261010 indicating the program version.

☐ Connect positive voltmeter lead to pin 7 of U3 (TLC27M7IP) on the Amp./P.S. board. Connect negative lead to ground near U3.

☐ With the THR control full clockwise, press the THR test pushbutton and adjust R171 Volt Cal (labeled "V"), so that the front panel display reading corresponds to the voltmeter reading at pin 7 of U3.

☐ Connect HV meter (2500 Megohm input impedance or greater) to the junction of R32 (4.7 Meg) and R33 (1 Meg) on P.S. board.

☐ While pressing the HV Test pushbutton, adjust HV control until the display reads 1500. R176 Current Cal may have to be adjusted counterclockwise to defeat the Overrange function.

☐ Adjust R175 HV Cal on Amp/P.S. board for 1500 ±5 on external HV meter.

☐ Confirm HV will adjust from 50 to 2400-2500 volts. Insure HV displayed reading tracks within 2% of HV output.

☐ Adjust HV for approximately 1000 volts.

☐ Adjust R176 Current Cal (labeled "0") for approximately 0.1 volt at pin 1 of U3 (TLC27M7IP) on Amp/P.S. board.

☐ Connect Overrange Simulator (1000 megohm) to the detector input.

☐ Adjust the O.L. control counterclockwise until hyphens start flashing across display every other count interval. Disconnect Overrange Simulator and confirm overrange function is defeated. Then adjust to fully clockwise position.

☐ Set THR control to 100 and Window IN/OUT switch to the OUT position.

☐ Connect pulser and adjust count rate for 40,000 CPM.

☐ Switch Ratemeter Multiplier switch to the X100 position and the Response switch to "F."

☐ Adjust pulse amplitude above threshold until a steady count rate is observed on ratemeter.

☐ Adjust R40 Meter Cal (labeled MCAL) on Processor board, for 400 CPM on meter.

☐ Adjust pulser for 10,000 CPM and check meter for ±10% linearity of reading. Adjust pulser and rate Multiplier switch to confirm linear readings on all ranges.

☐ Switch SCALER/DIG. RATE switch to the SCALER position.

☐ Confirm count time switch operation by taking a 0.1 minute and 0.5 minute count. Colons should be observed during count cycle.

☐ Check HOLD and ZERO pushbutton functions.

☐ Switch SCALER/DIG. RATE switch to the DIG. RATE position and confirm update count display operation approximately every 2 seconds.

☐ Connect unimorph and headset to the audio outputs and confirm audio divide and volume control functions. NOTE: Unimorph should shut off when headset is connected.

☐ With the THR control adjusted for 100, adjust R174 Gain (labeled G) for 1.5 millivolt input sensitivity. Insure instrument functions at low input sensitivity without "noise".

☐ Instrument may have to be placed in can to permit "noise free" operation.

☐ Set pulser pulse amplitude to 10mV.

☐ With THR still set at 100, fine adjust R174 Gain control until ratemeter reads 30,000 CPM with 40,000 CPM from pulser.

☐ Adjust THR control for readings of 200, 300, 400, and 500 to insure the pulser input is 20, 30, 40 and 50mV respectively. Use the 3/4 CPM input setting to discriminate turn on points as in procedure above.

☐ Adjust THR control back to 100.

☐ Switch Window IN/OUT switch to the IN position. Adjust WIN control for 100, 200, 300, 400 and 500 to confirm 20, 30, 40 and 50mV window cut off points.

☐ Set WIN back to 100 and OUT position for instrument shipment.

☐ Input a full-scale ratemeter count rate (500 CPM) and connect voltmeter to the recorder output. Adjust R41 (labeled RCAL) on Processor board for 1 volt.

☐ Check F/S ratemeter response time for 4.5 ±0.5 and 22 ±2 seconds at 90% of full scale.

☐ Decrease input supply voltage until periods are observed at bottom of display. Press BAT Test pushbutton and confirm low BAT Test is 4.4 ± 0.1 Vdc. Adjust supply voltage back to 5 volts and confirm BAT test and actual supply input is 5 ±0.05 Vdc.

☐ Switch SCALER/DIG. RATE switch to the SCALER position. Count Time Multiplier to CONT. Press count pushbutton and start with low enough count rate to observe each digit number count sequence from Least significant digit to MSD. Decade pulser count rate to speed up digit segment display check.

☐ Increase count rate enough to overflow counter. An "H" should be observed in the MSD flashing every count interval.

☐ Turn Lamp switch to the ON position and confirm 2 lamps in the display and 2 lamps below the meter are illuminated.

☐ Current draw with lamps on should be 210 ±20 mA.

☐ Turn lamp OFF and current should be approximately 40 ±5 mA.

PARTS LIST

Ref. No.	Description	Part No.
	Model 2221 Portable Scaler Ratemeter	
UNIT	Completely Assembled Model 2221 Portable Scaler Ratemeter	48-2065
	Amplifier/Power Supply Board, Drawing 261 X 56	
BOARD	Assembled Board	5261-072
•	**CAPACITORS**	
C107	1μF, 35V, DT	04-5575
C108	2.2μF, 25V, DT	04-5559
C109	4.7μF, 10V, DT	04-5578
C110	4.7μF, 10V, DT	04-5578
C111	100μF, 10V, DT	04-5576
C112	4.7μF, 10V, DT	04-5578
C114	10pF, 100V, C	04-5573
C115	0.1μF, 100V, C	04-5521
C116	0.1μF, 100V, C	04-5521
C117	0.1μF, 100V, C	04-5521
C118	0.1μF, 100V, C	04-5521
C120	0.0022μF, 100V, P	04-5580
C121	0.001μF, 100V, C	04-5519
C122	0.1μF, 100V, C	04-5521
C123	100pF, 100V, C	04-5527
C124	0.1μF, 100V, C	04-5521
C125	0.01μF, 100V, C	04-5523
C126	47pF, 100V, C	04-5533
C127	0.1μF, 100V, C	04-5521
C128	47pF, 100V, C	04-5533
C129	100pF, 100V, C	04-5527
C130	10pF, 100V, C	04-5573
C131	0.1μF, 100V, C	04-5521
C132	10pF, 100V, C	04-5573
C133	0.0015μF, 3kV, C	04-5518
C135	0.0015μF, 3kV, C	04-5518
C136	0.0015μF, 3kV, C	04-5518
C137	100pF, 3kV, C	04-5532
C138	100pF, 3kV, C	04-5532
C139	0.0056μF, 3kV, C	04-5522
C140	0.0056μF, 3kV, C	04-5522
C141	0.0056μF, 3kV, C	04-5522
C145	1μF, 35V, DT	04-5575
C146	100μF, 10V, DT	04-5576
C147	100μF, 10V, DT	04-5576
C148	10μF, 20V, DT	04-5592
C154	0.0015μF, 3kV, C	04-5518
C164	0.1μF, 100V, C	04-5521
C165	0.1μF, 100V, C	04-5521
•	**TRANSISTORS**	
Q142	2N3904	05-5755
Q143	MPSU51	05-5765
•	**INTEGRATED CIRCUITS**	
U1	TLC27M7	06-6248
U2	LM358	06-6024
U3	TLC27M7	06-6248
U4	TLC27M7	06-6248
U5	LM331	06-6156
U6	LM2578	06-6223
U7	CA3290AE	06-6140
U8	CA3096	06-6023
U9	CA3096	06-6023
U105	CD4098	06-6066
U106	CA3096	06-6023
U144	CD4052	06-6141
•	**DIODES**	
CR10	IN5819	07-6306
CR12	MR-250-2	07-6266
CR13	MR-250-2	07-6266
CR14	MR-250-2	07-6266
CR15	MR-250-2	07-6266
CR16	1N4148	07-6272
CR17	1N4148	07-6272
CR18	1N4148	07-6272
CR19	1N4148	07-6272
CR20	1N4148	07-6272
CR21	1N4148	07-6272
CR22	1N4148	07-6272
CR24	1N5819	07-6306
CR25	1N5819	07-6306
CR151	MR-250-2	07-6266
CR177	1N5252	07-6265
•	**RESISTORS**	
R32	4.7M	10-7030
R33	1M	10-7028
R34	1M	10-7028
R35	1G	12-7686
R36	1G	12-7686
R37	0.1 OHM, 1%	12-7647

Ref. No.	Description	Part No.
R38	10k	12-7748
R39	1M, 1%	12-7763
R40	10k	12-7748
R41	10k	12-7748
R42	10k	12-7748
R43	10k	12-7748
R44	47k	12-7758
R45	4.7k	12-7755
R46	10k	12-7748
R47	10k	12-7748
R48	10k	12-7748
R49	1k	12-7750
R50	220 OHM	12-7753
R51	220 OHM	12-7753
R52	470k	12-7757
R53	47k	12-7758
R54	1k	12-7750
R55	10k	12-7748
R56	4.7k	12-7755
R57	10k	12-7748
R58	10k	12-7748
R59	10k	12-7748
R60	1k	12-7750
R61	178k, 1%	12-7769
R62	4.7k	12-7755
R63	100k	12-7747
R64	10k	12-7748
R65	10k, 1%	12-7764
R66	220 OHM	12-7753
R68	10k	12-7748
R69	1.5k	12-7773
R70	100k, 1%	12-7765
R71	200k	12-7752
R72	200k	12-7752
R73	100k	12-7747
R74	100k	12-7747
R78	22k	12-7754
R79	10k	12-7748
R80	10k	12-7748
R81	100k	12-7557
R82	200k	12-7752
R83	22k	12-7754
R84	10k	12-7748
R85	1M	12-7763
R86	4.42k	12-7760
R87	47 OHM	12-7756
R88	100k, 1%	12-7765
R89	17.8k	12-7759
R90	10k,1%	12-7764
R91	1M, 1%	12-7763
R92	1M, 1%	12-7763
R93	40.2k, 1%	12-7761
R94	100 OHM	12-7746
R95	10k	12-7748
R96	1M, 1%	12-7763
R97	10M	12-7749
R98	1M	12-7751
R99	470k	12-7757
R100	470k	12-7757
R101	100k	12-7747
R102	1M, 1%	12-7763
R171	10k TRIMMER	09-6822
R172	100k TRIMMER	09-6823
R173	100k TRIMMER	09-6823
R174	10k TRIMMER	09-6822
R175	1M TRIMMER	09-6828
R176	1M TRIMMER	09-6828

- **TRANSFORMERS**

T103	M2300 HVPS	4275-037
T104	M2221 LVPS	4275-094

- **MISCELLANEOUS**

9 EA.	CLOVERLEAF RECEPTACLES	
	011-6809-00	18-8771
3 EA.	SPACERS	18-8933
*	TRANSISTOR SPACER	18-8992
*	AMPLIFIER SHIELD	7261-100

Processor Board, Drawing 261 X 91

BOARD	Assembled Board	5261-136

- **CAPACITORS**

C1	47pF, 100V, C	04-5533
C2	0.047µF, 100V, C	04-5565
C3	0.001µF, 100V, C	04-5519
C4	27pF, 100V, C	04-5614
C5	27pF, 100V, C	04-5614
C6	22µF, 15V, DT	04-5579
C7	10µF, 20V, DT	04-5592
C8	100µF, 10V, DT	04-5576
C9	100µF, 10V, DT	04-5576

- **TRANSISTOR**

Q36	2N3904	05-5755

- **INTEGRATED CIRCUITS**

U10	ICM7556	06-6244
U11	CD74HCO8	06-6222
U13	CD4054	06-6245
U14	CD4056	06-6095
U15	CD4056	06-6095
U16	CD4056	06-6095

Ref. No.	Description	Part No.
U17	CD4056	06-6095
U18	CD4056	06-6095
U19	CD4056	06-6095
U20	CD74HC573	06-6093
U21	87C257	06-6278
U22	80C51FA	06-6236
U25	RDD104	06-6060
U26	LM358	06-6024
U43	CD74HC238	06-6246
• **DIODE**		
CR45	1N4148	07-6272
• **RESISTORS**		
R27	3.3k	10-7013
R28	220k	10-7066
R29	130k	10-7067
R30	470k	10-7026
R31	220k	10-7066
R32	1.2k	10-7058
R33	5.6k	10-7042
R40	1M TRIMMER	09-6828
R41	1M TRIMMER	09-6828
• **RESISTOR NETWORKS**		
R34-R35	NETWORK-22k SIP 10 PIN	12-7566
• **TRANSFORMER**		
T37	M300-9	4275-074
• **CRYSTAL**		
Y39	6.000 MHZ	01-5209
• **CONNECTOR**		
P3/1-50	RIBBON-1-102159-0	13-7834
• **MISCELLANEOUS**		
*	28P SOCKET	06-6096
7 EA.	SPACER-816-045 16P	18-8990
*	SPACER-470-015	18-8991
2 EA.	RIBBON-102312-2 LATCH	13-7805

Ref. No.	Description	Part No.
Calibration Board, Drawing 261 X 59		
BOARD	Assembled Board	5261-075
• **VOLTAGE REFERENCES**		
U1	LM385Z-1.2	05-5808
U2	LM385Z-1.2	05-5808
U3	LM385Z-1.2	05-5808
• **RESISTORS**		
R4	22k	12-7754
R10	22k	12-7754
R11	100k TRIMMER	09-6813
R12	100k TRIMMER	09-6813
R13	100k TRIMMER	09-6813
R14	100k TRIMMER	09-6813
• **CONNECTOR**		
P6/1-7	640457-7 MTA100	13-8183
LCD Display Board, Drawing 261 X 58		
BOARD	Assembled Board	5261-074
• **INTEGRATED CIRCUIT**		
U7	3918	07-6252
• **RESISTORS**		
R4	22 OHM	10-7072
R14	22 OHM	10-7072
• **CONNECTORS**		
P4	RIBBON-RD67 50BRN EDGE 50P	13-7816
P5	640456-2 MTA100	13-8073
• **MISCELLANEOUS**		
DS10-DS13	BULB-#6833	22-9613

Backplane Board, Drawing 261 X 60

Ref. No.	Description	Part No.
BOARD	Assembled Backplane Board	5261-076
• **DIODE**		
CR6	1N5819	07-6306
• **CONNECTORS**		
J1-J2	EZA22DRSN	13-8181
P7	640456-7 MTA100	13-8115
P8	1-640456-4 MTA100	13-8141
P9	640456-5 MTA100	13-8057
P10	640456-2 MTA100	13-8073
P11	1-640456-4 MTA100	13-8141

Chassis Wiring Diagram, Drawing 261 X 61

Ref. No.	Description	Part No.
• **AUDIO**		
DS1	UNIMORPH 60690	21-9251
• **CONNECTORS**		
J1	CONN-640456-2 MTA100	13-8073
J2	UG706/U SERIES C	13-7751
J5	PHONE JACK TINI #42A	21-9333
J6-J7	(ON CAL HARNESS)	8261-088
J8	(ON MAIN HARNESS)	8261-087
J9	(ON BATTERY HARNESS)	8261-089
J10	NOT USED	
J11	(ON MAIN HARNESS)	8261-087
• **SWITCHES**		
S1-S7	30-1-PB GRAYHILL	08-6517
S8-S12	7101-SYZ-QE TOGGLE	08-6511
SW1	513381	08-6656
SW2	513381	08-6656
SW3	MTA-206PA	08-6657
• **BATTERY**		
B1-B4	1.5 VOLT "D" DURACELL	21-9313
• **RESISTORS**		
R1	10k NON-LOCKING	09-6753
• **MISCELLANEOUS**		
M1	M2221 METER ASSY.	4261-091

DRAWINGS AND DIAGRAMS

Amplifier/Power Supply Board Schematic, Drawing 261 x 56
Amplifier/Power Supply Board Component Layout, Drawing BS261072

Processor Board Schematic, Drawing 261 x 91
Processor Board Component Layout, Drawing 261 x 103

Calibration Board Schematic, Drawing 261 x 59
Calibration Board Component Layout, Drawing BS261075

LED Display Board Schematic, Drawing 261 x 58
LED Display Board Component Layout, Drawing BS261074

Backplane Board Schematic, Drawing 261 x 60
Backplane Board Component Layout, Drawing BS261076

RS-232 Board Schematic, Drawing 261 x 179
RS-232 Board Component Layout, Drawing 261 x 180

Wiring Diagram, Drawing 261 x 61

Model 2221 RS-232 Port Addition (LMI Part Number 4261-148)

The Model 2221 RS-232 port addition allows the M2221 data to be read as output to a computer or serial printer, by dumping either the ratemeter or scaler reading, as desired. The desired reading is selected with a toggle switch located in the digital control section of the front panel, labeled with two positions: "SCALER" and "DIG. RATE." The port addition kit (LMI Part Number 4261-148) includes the internal board, a cable that will connect directly to a 9-pin PC port and software routines to log the readings.

The scaler reading dumps when the scaler has completed a count. The ratemeter is dumped every 2 seconds in one of three formats, depending on the firmware installed. The three available formats are (1) counts per 2 seconds, (2) counts per 60 seconds (cpm), or (3) counts per second (cps). Data output is always in a 6-digit format with a letter prefix, corresponding to the following:

Ratemeter: "R"

Scaler: According to the table below

Letter Prefix	Time of Count (min)	Time of Count (sec)
	Format 1 or 2	Format 3 (cps version)
A	0.1	1
B	0.2	2
C	0.5	5
D	1.0	10
E	2.0	30
F	5.0	60
G	10.0	120

A carriage return and then a linefeed character follow the 6th digit.

The communication protocol is 9600 baud, no parity, 1 stop bit, and 8 data bits. The RS-232 port is an output only with no handshaking available. The M2221 will dump the data, no matter what, even if the attached computer or printer is not ready. The cable provided is a coaxial cable, providing TXD and GND to a 9-pin D-connector, ready to plug into a standard PC serial port.

The Model 2221 Processor Board (Part Number 5261-136) utilizes an 87C257 EPROM with one of the following firmware numbers, depending on the desired rate:

Rate Dump as counts per 2 seconds -- #261-06-N03.
Rate Dump as counts per 60 seconds -- #261-07-N02.
Rate Dump as counts per second with meterface 202-930 -- #261-02-N02

Ref. No.	Description	Part No.
	RS-232 Board, Drawing 261 X 179	
BOARD	Assembled RS-232 Board	5261-179

- **CAPACITORS**

C1	4.7µF, 20V, SMT	04-5653
C2	10µF, 20V, SMT	04-5655
C3	4.7µF, 20V, SMT	04-5653
C4	10µF, 20V, SMT	04-5655
C5-C6	68µF, 10V, SMT	04-5654

- **INTEGRATED CIRCUITS**

U001	IC-MAX220CSE, SMT	06-6329

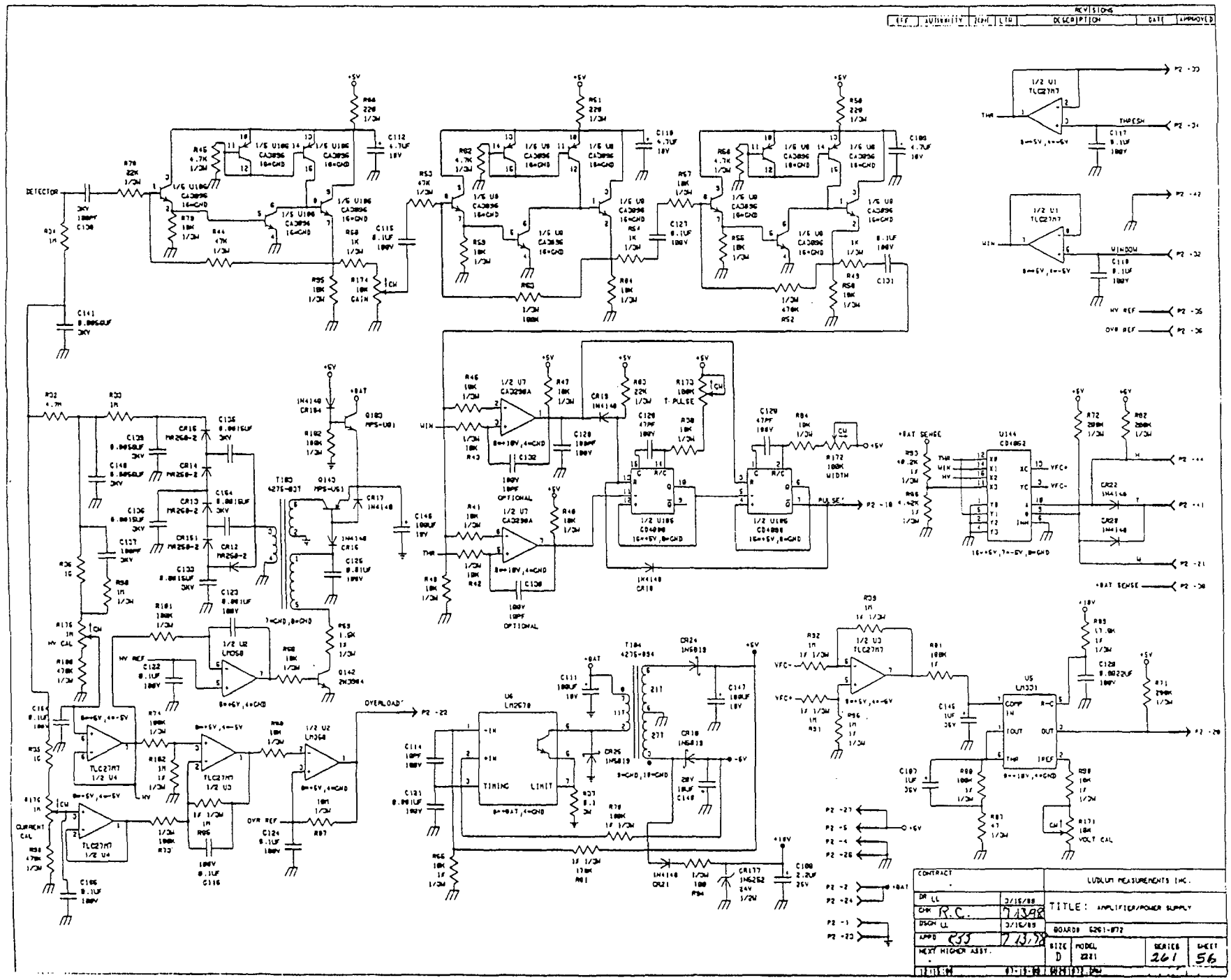
REVISIONS
DESCRIPTION
DATE
APPROVED
DETECTOR
THRESH
WINDOW
HV REF
OVR REF
+BAT SENSE
PULSE
OVERLOAD
VFC+
VFC-
VOLT CAL
CURRENT CAL
HV CAL
GAIN
WIDTH
T-PULSE
OPTIONAL
TIMING
LIMIT
CONTRACT
LUDLUM MEASUREMENTS INC.
TITLE: AMPLIFIER/POWER SUPPLY
BOARD# 6261-872
SIZE D
MODEL 2221
SERIES 261
SHEET 56

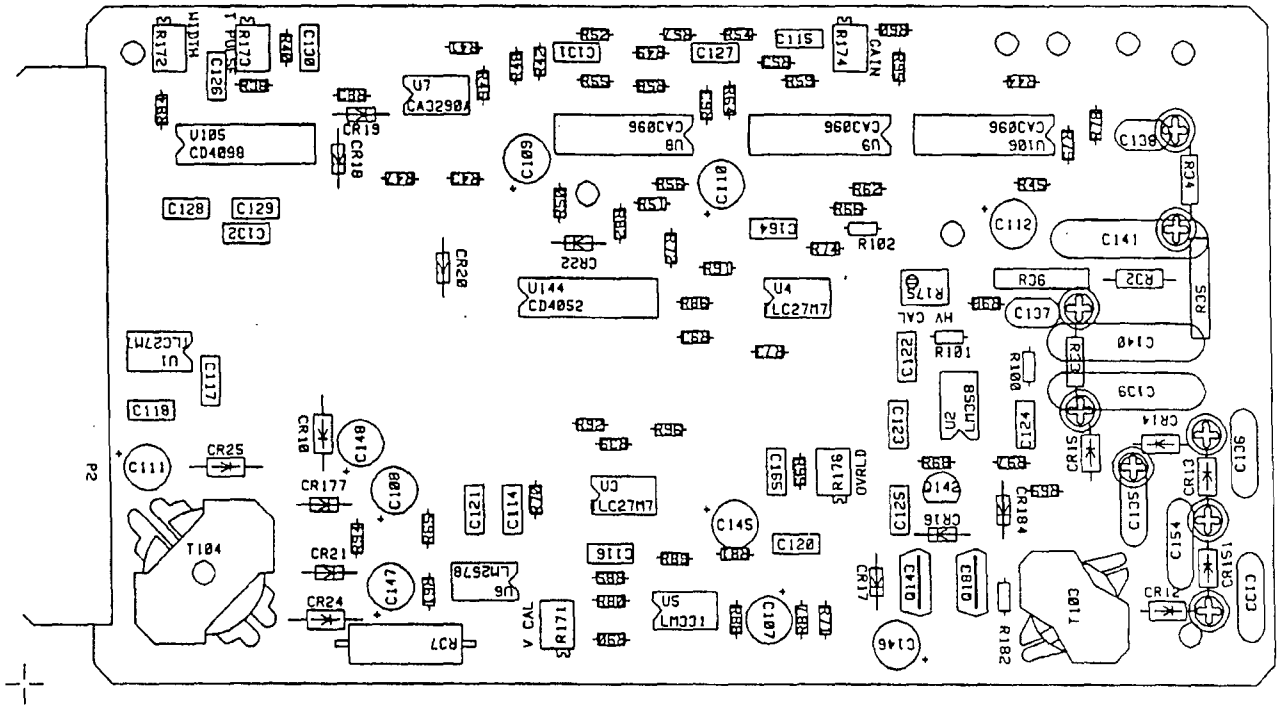

BOARD# 5261-072	
TITLE AMPLIFIER/POWER SUPPLY	
MODEL 2221	
COMPONENT OUTLINES	
DR RDS	4/7/89
CHK R.C.	7/13/98
DSGN LL	3/15/89
APPD BS	7/13/98
B:BS261072.DRW	
07-19-89	15:32:24

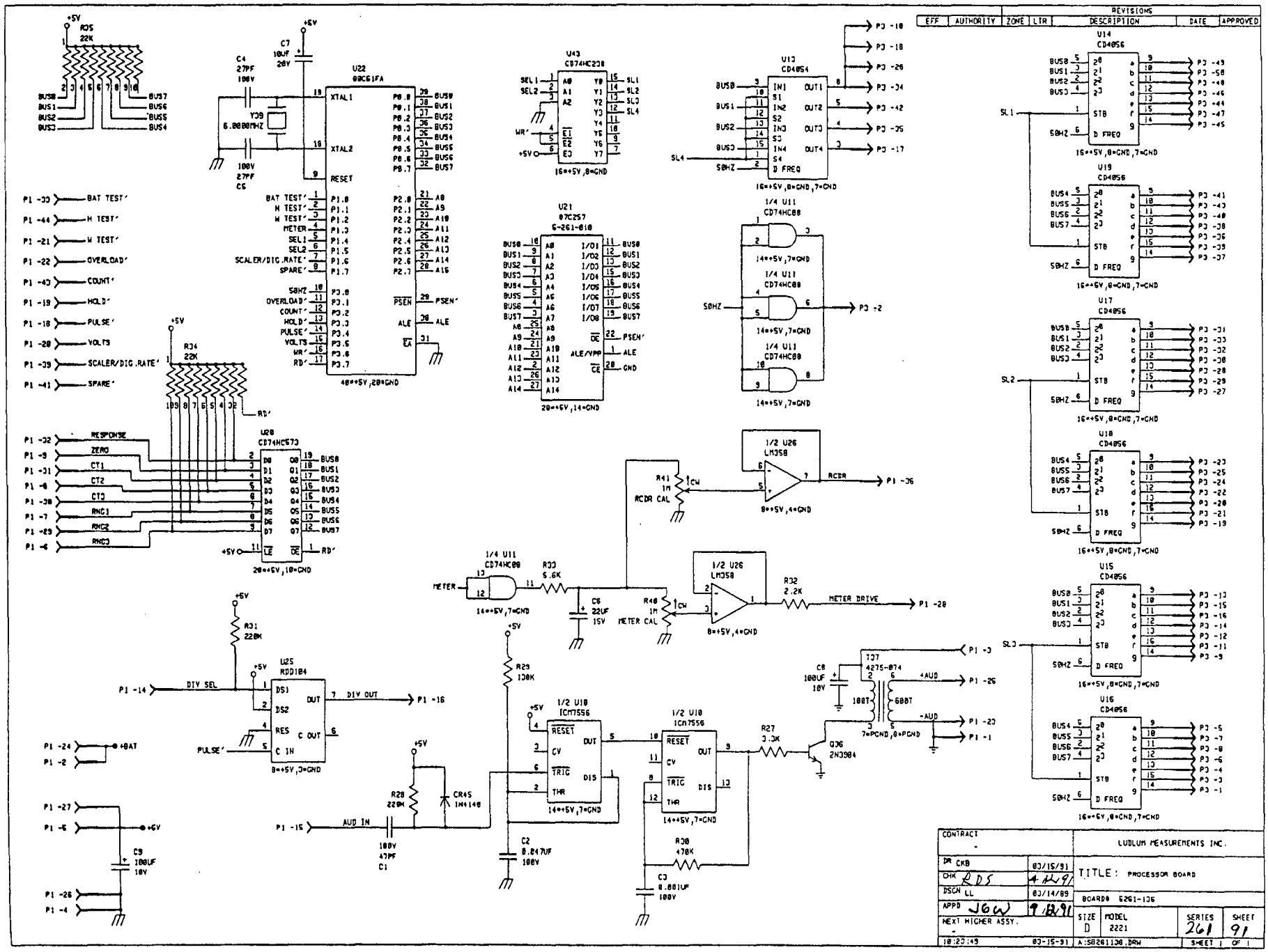
REVISIONS
EFF | AUTHORITY | ZONE | LTR | DESCRIPTION | DATE | APPROVED
U22 80C51FA
U21 87C257 5-261-010
U43 CD74HC238
U13 CD4054
U14 CD4056
U19 CD4056
U17 CD4056
U18 CD4056
U15 CD4056
U16 CD4056
U11 CD74HC08
U26 LM358
U28 CD74HC573
U25 RDD184
U10 ICM7556
T37 4275-074
Q36 2N3904
CONTRACT
LUDLUM MEASUREMENTS INC.
TITLE: PROCESSOR BOARD
BOARD# 5261-136
SIZE D
MODEL 2221
SERIES 261
SHEET 91
NEXT HIGHER ASSY.
A:5B261136.DRW

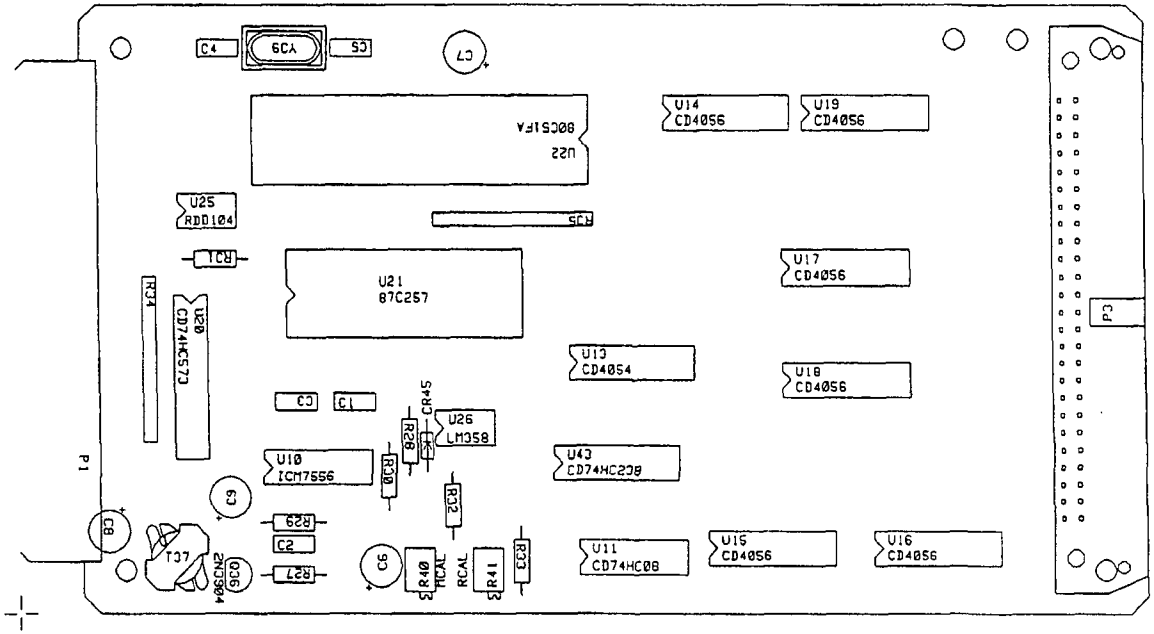

LUDLUM MEASUREMENTS INC. SWEETWATER, TX.				
DR CKB	03/15/91	TITLE: PROCESSOR BOARD		
CHK R.C.	4/13/98	BOARD# 5261-106	BS261106	
DSGN LL	03/14/91	MODEL 2221	SERIES 261	SHEET 100
APP BSS	7-13-98	COMP ARTWORK ☐	SLDR ARTWORK ☐	
09:19:04	29-Mar-94	COMP OUTLINE ☒	SLDR OUTLINE ☐	
COMP PASTE ☐	COMP MASK ☐	SLDR PASTE ☐	SLDR MASK ☐	

REVISIONS						
EFF	AUTHORITY	ZONE	LTR	DESCRIPTION	DATE	APPROVED

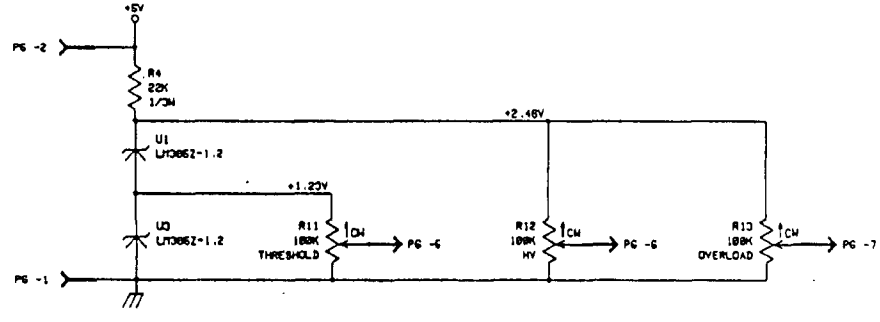

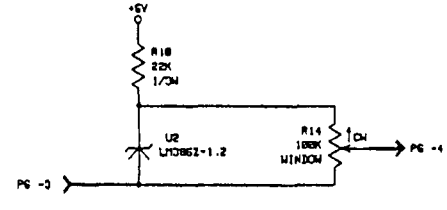

CONTRACT -		LUDLUM MEASUREMENTS INC	
DR LL	3/16/89	TITLE: CALIBRATION BOARD	
CHK R.C.	4/13/98		
DSGN LL	3/16/89	BOARD# 6261-875	
APPD BS	3/16/89	SIZE D / MODEL 2221	SERIES 261 / SHEET 59
NEXT HIGHER ASSY. -			
15:59:36	07-19-89	0:\6261875.DRW	SHEET 1 OF 1

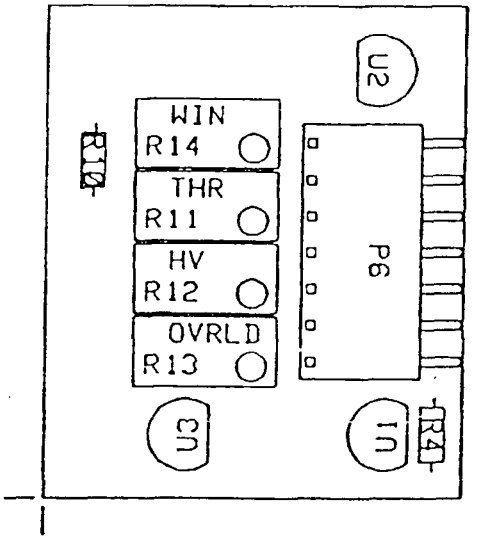

BOARD# 5261-075	
TITLE CAL BOARD	
MODEL 2221	
COMPONENT OUTLINES	
DR RDS	3/28/89
CHK R.C.	7/13/98
DSGN LL	3/16/89
APPD RSS	7/13/98
BS261075.DRW	
05-20-89	07:38:12

REVISIONS						
EFF	AUTHORITY	ZONE	LTR	DESCRIPTION	DATE	APPROVED

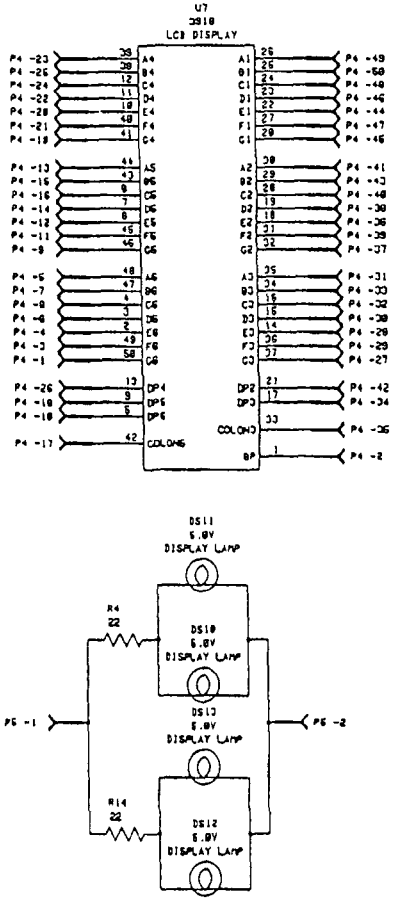

CONTRACT		LUDLUM MEASUREMENTS INC.
DR LL	3/16/88	TITLE: LCD DISPLAY
CHK R.C.	7/13/88	
DSGN LL	3/16/88	BOARD# 5261-874
APPD	7/13/88	
NEXT HIGHER ASSY.		SIZE D · MODEL 8881 · SERIES 261 · SHEET 58

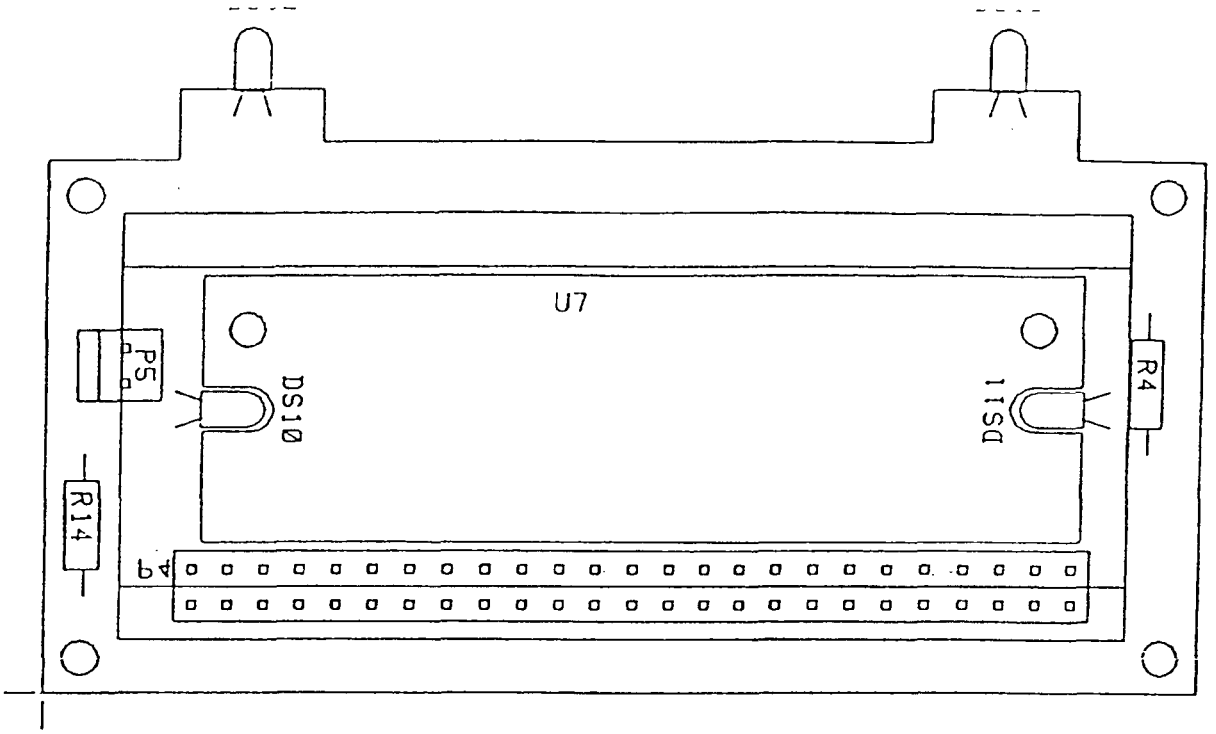

BOARD# 5261-Ø74	
TITLE DISPLAY BOARD	
MODEL 2221	
COMPONENT OUTLINES	
DR –	3/27/89
CHK R.C.	7/13/98
DSGN LL	3/16/89
APP.D RSS	7/13/98
BS261Ø74.DRW	
Ø5-24-89	15:44:2Ø

REVISIONS						
EFF	AUTHORITY	ZONE	LTR	DESCRIPTION	DATE	APPROVED

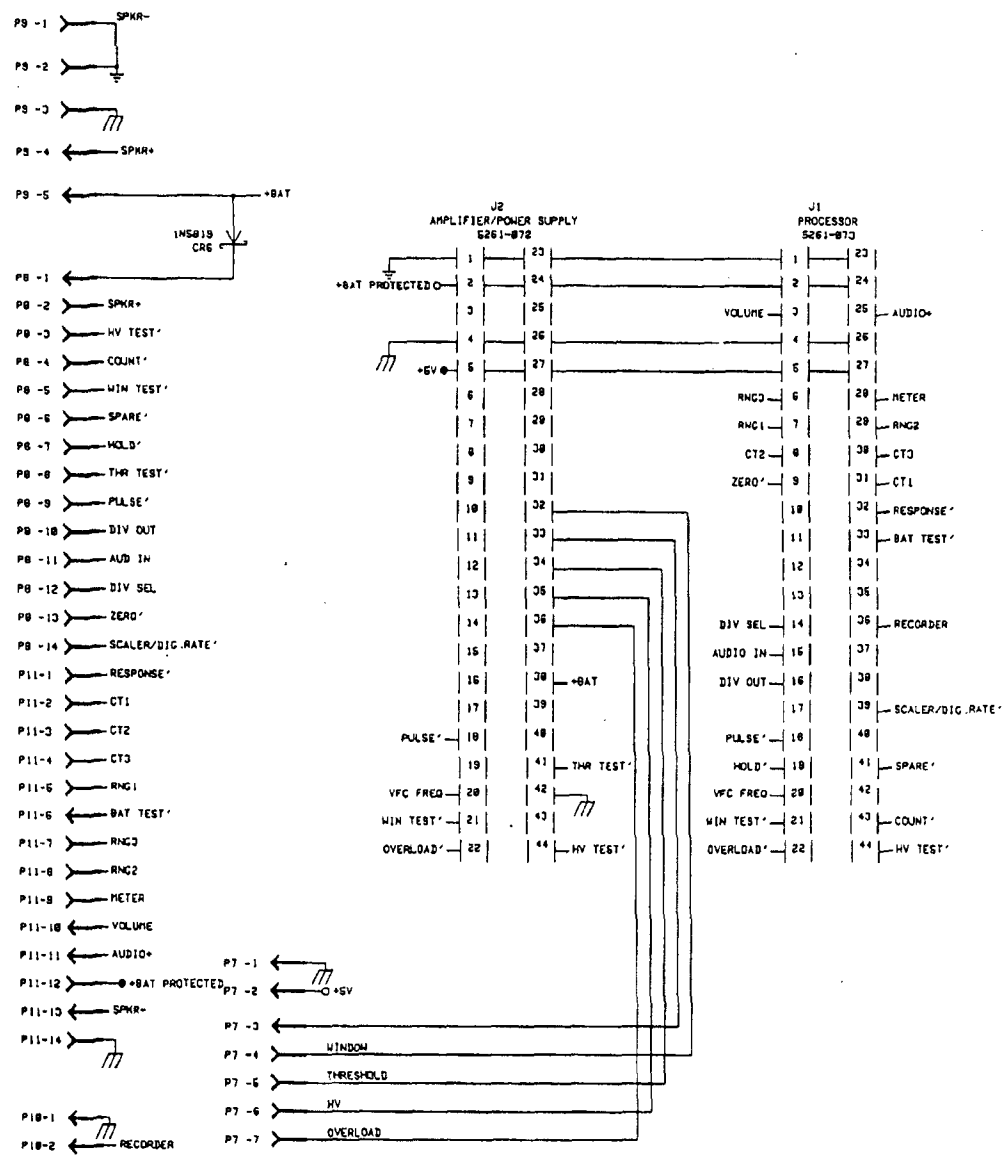

CONTRACT		LUDLUM MEASUREMENTS INC.	
DR LL	3/16/89	TITLE: BACKPLANE	
CHK R.C.	7/13/98		
DSGN LL	3/16/89	BOARD# 5261-076	
APPD	7/13/98	SIZE D / MODEL 2221	SERIES 261 / SHEET 60
NEXT HIGHER ASSY. -			
07:46:14	06-24-89	5261076.DRW	SHEET 1

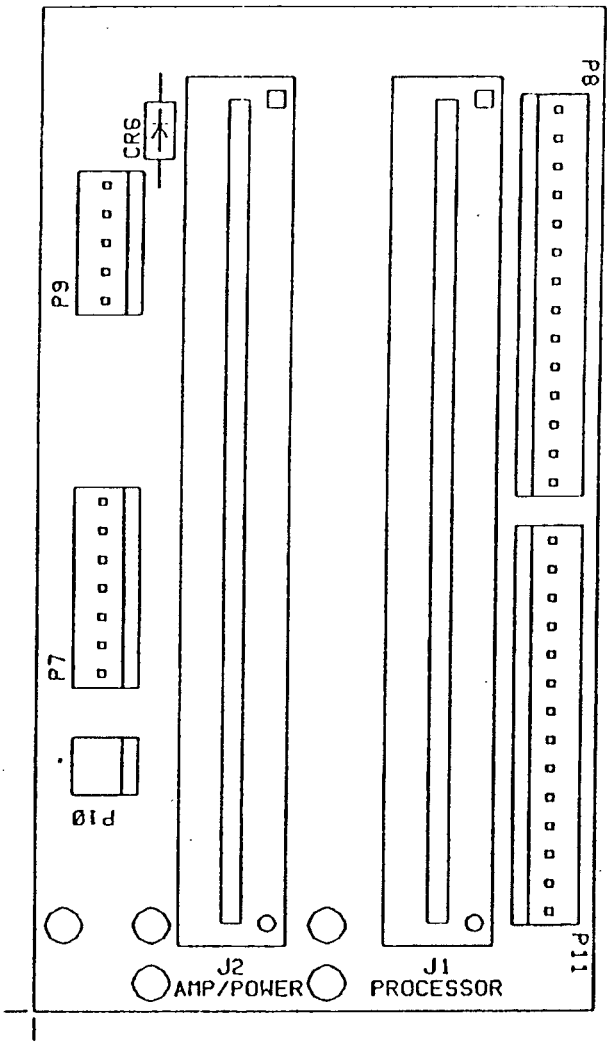

BOARD# 5261-Ø76	
TITLE BACKPLANE	
MODEL 2221	
COMPONENT OUTLINES	
DR RDS	3/28/89
CHK R.C.	7 /13 /98
DSGN LL	3/16/89
APPD RSS	7 /13 / 98
BS261Ø76.DRW	
Ø5-24-89	15:15:37

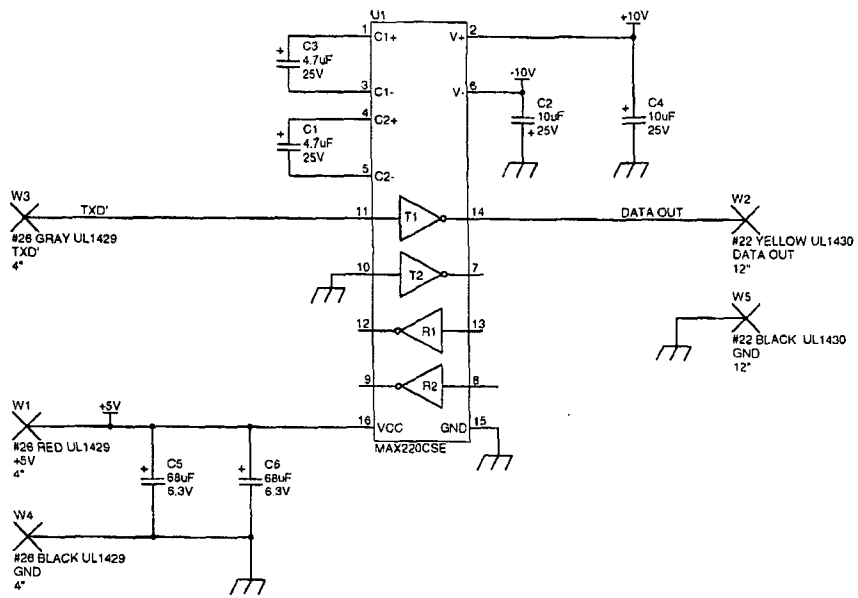

LUDLUM MEASUREMENTS, INC.		PO Box 810 501 Oak Street Sweetwater, Texas 79556 U.S.A. 1-800-622-0828	
Drawn: CKB	21-MAR-01	Title: RS-232 BOARD	
Design: RDS	11-NOV-99	Model: 2221	
Check: RC	Feb 4 02	Board#: 5261-179	
Approved: RDS	4-Feb-02	Sheet: 1 of 1	Series 261 / Sheet 179
14:13:37	4-Feb-2002	Rev: 1.0	
X:\Projects\LMI\M\2221\M2221 DCS - Documents\5261-179.rev1 0\261x179 Sch			

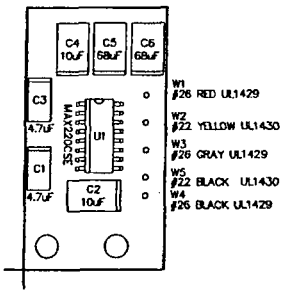

Drawn: CKB	21-MAR-01	Title: RS-232 BOARD	
Design: RDS	11-NOV-99		
Check: R.C.	Feb 4, 2002	Model: 2221	
Approve: RDS	4 Feb 02	Board#: 5261-179	
Layer: Mech.1 Mech.2 Mech.3 Mech.4	Top Overlay	Rev: 1.0	Series 261 / Sheet 180
	MID:	SCALE: 1.00	
	14:02:28 4-Feb-2002		

REVISIONS						
EFF	AUTHORITY	ZONE	LTR	DESCRIPTION	DATE	APPROVED

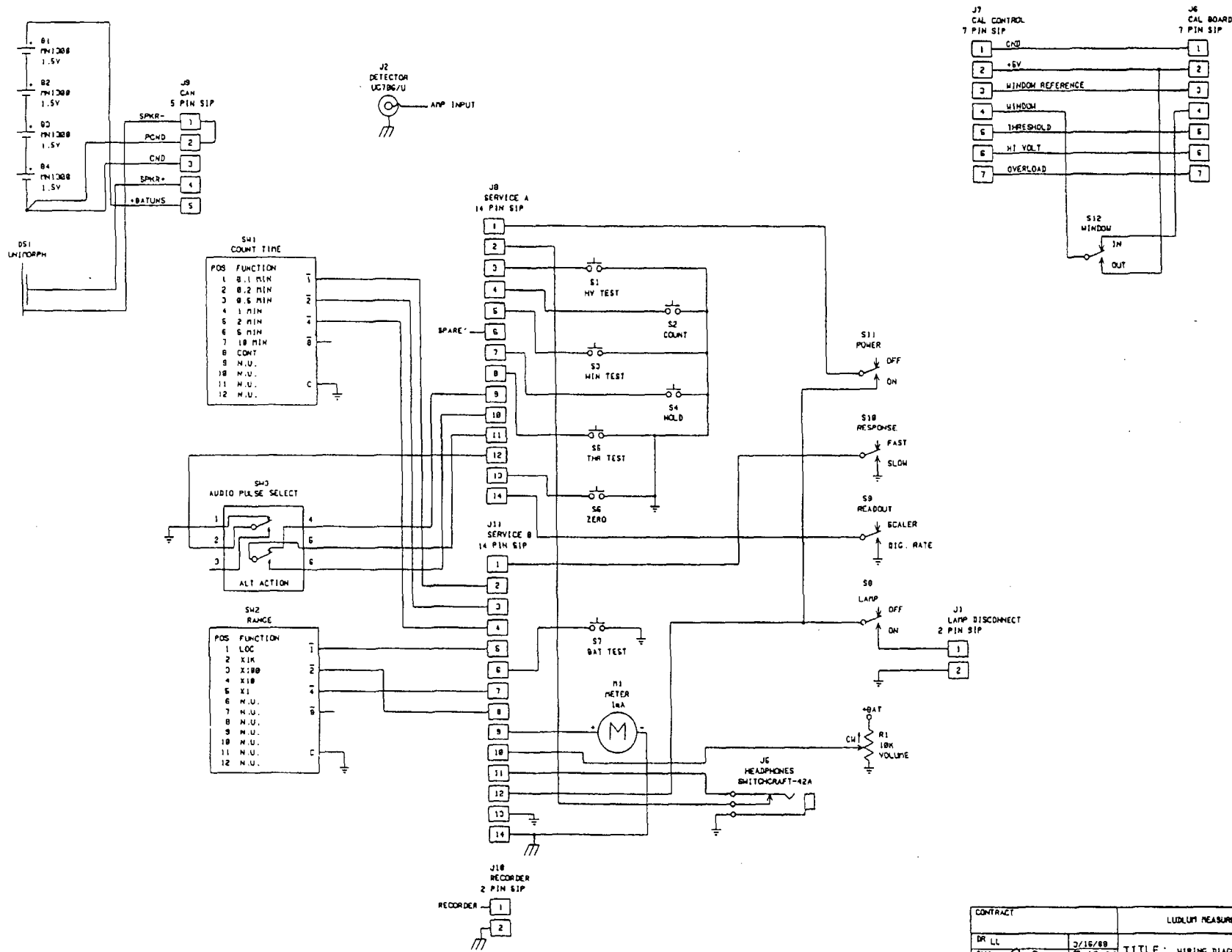

CONTRACT		LUDLUM MEASUREMENTS INC.
DR LL	7/16/89	TITLE: WIRING DIAGRAM
CHK R.C.	7/13/89	
DSGN LL	7/16/89	BOARD# 261-077
APPD	7/13/89	SIZE D · MODEL 2221 · SERIES 261 · SHEET 61
NEXT HIGHER ASSY. -		
10:41:05	05-20-93	5926107.DWG · SHEET 1 OF 1

LUDLUM MODEL 2224

SCALER/RATEMETER

March 2002
Serial No. 183080 and Succeeding
Serial Numbers

Measuring Range: 0-500,000 counts per minute
Power Requirement: two standard "D" cell batteries

LUDLUM MEASUREMENTS, INC.
501 OAK ST., P.O. BOX 810
SWEETWATER, TX 79556
915/235-5494 FAX: 915/235-4672

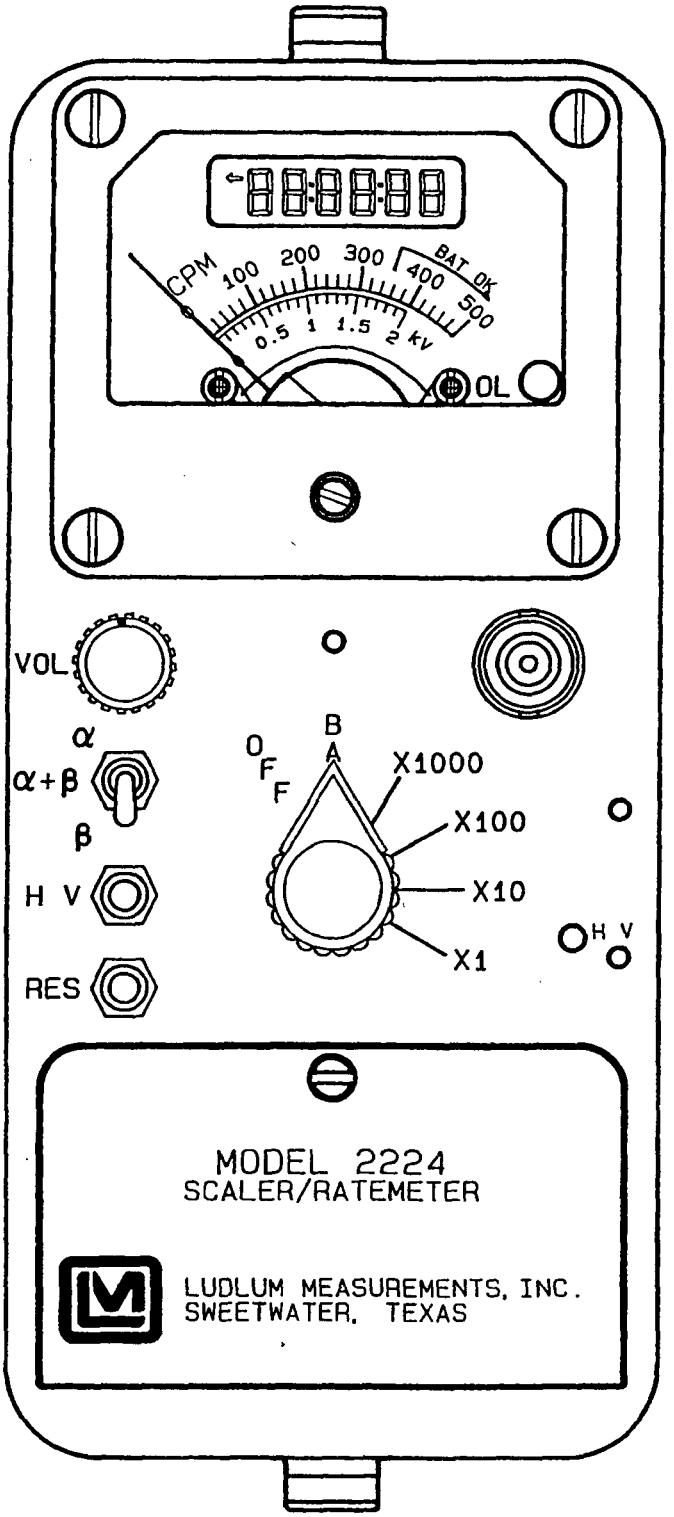

CHG	NO.			DWN	CHK	APP
DWN BG	DATE 9-17-93	CHK	DATE	APP	DATE	
TOL: SHOP STD ☐ OTHER		SCALE: FULL ☐ OTHER				
TITLE MODEL 2224 SCALER/RATEMETER						
LUDLUM MEASUREMENTS, INC. 501 OAK STREET SWEETWATER, TEXAS 79556			SERIES 390		SHEET 85	

M2224 Scaler/Ratemeter
March 2002

TABLE OF CONTENTS

1. GENERAL 1

2. SPECIFICATIONS 1

3. PRINCIPLE OF OPERATION 2

4. PRELIMINARY INSTRUCTIONS 2
   4.1 Unpacking and Repacking 2

5. OPERATING INSTRUCTIONS 2
   5.1 Safety Measures 2
   5.2 Descriptions of Controls and Functions 2
      5.2.1 Operator Controls 2
      5.2.2 Internal Controls 3
   5.3 Operating Procedures 4
   5.4 Calibration 5
      5.4.1 Meter Calibration 5
      5.4.2 Detector Overload Calibration 5

6. THEORY OF OPERATION 6
   6.1 Amplifier/Power Supply board # 5390-066 6
      6.1.1 Detector Input/Amplifier 6
      6.1.2 Alpha/Beta Discriminator 6
      6.1.3 Alpha/Beta Disc. Logic Circuit 6
      6.1.4 Low Voltage Supply 6
      6.1.5 High Voltage Supply 6
      6.1.6 Detector Overload 6
      6.1.7 Meter Drive 6
   6.2 Processor Bd.# 5390-095 7
      6.2.1 Power supply 7
      6.2.2 Microproccessor 7
      6.2.3 LCD Drive 7
      6.2.4 Audio 7

7. MAINTENANCE 8

PARTS LIST 9
   Model 2224 Scaler/Ratemeter 9
      Amp/Power Supply, Drawing 390 X 63 9
      Processor Board, Drawing 390 x 97 10
      Calibration Board, Drawing 390 x 100 10
      Display Board, Drawing 390 x 127 11
      Interconnect Board, Drawing 390 x 124 11
      Chassis Wiring Diagram, Drawing 390 X 103 11

DRAWINGS AND DIAGRAMS 12

M2224 Scaler/Ratemeter
March 2002

1. GENERAL

The Model 2224 is a portable microprocessor based radiation survey instrument used to measure and discriminate low level alpha/beta radiation when used with an alpha/beta scintillation or proportional detector.

The data is displayed by an analog ratemeter and a six-digit liquid crystal display (LCD) counter. The ratemeter dial indicates 0-500 CPM with four linear range multipliers of X1-X1000 producing an overall range of 0-500 k CPM. The LCD is used to display the counts accumulated during the preset count time. There are four count times available via internal switches. These count times are 6 seconds, 30 seconds, 60 seconds, and 120 seconds. The counter is reset and started by pressing the Count button located in the end of the carrying handle.

The ratemeter and LCD can display alpha only, beta only, or alpha and beta by selecting the corresponding toggle switch selection. Audible click per event tones can also be selected to discriminate beta (low pitch tone) from alpha (high pitch tone) via the side mounted speaker. Beta threshold, window, and alpha threshold are adjustable to optimize alpha/beta efficiency and count separation.

A regulated high voltage power supply adjustable from 200 to 2000 volts with detector overload detection is utilized to operate a wide range of scintillation detectors. Other operating features of the instrument include programmable audio divide by (beta channel only), a two-position switch (internal) for selecting the audio discrimination mode, an adjustable volume, pushbutton battery test switch, pushbutton high voltage test switch and meter reset.

The unit body is made of cast aluminum with a drawn aluminum can. The unit is operated with two "D" cell flashlight batteries for operation from -10°C to approximately 50°C. For temperature operation to -10°C, either very fresh alkaline or rechargeable NiCd batteries may be used.

2. SPECIFICATIONS

- **POWER:** two standard "D" size batteries.

- **RANGES:** four linear range multiples of X1, X10, X100, and X1000; used in combination with the 0-500 CPM meter dial, 0-500k CPM is achieved with the range multiplier

- **SENSITIVITY:** beta Threshold (BT) is adjustable from 2 - 15 millivolts (mV), beta Window (BW) is adjustable from the beta Threshold up to the alpha Threshold setting; alpha Threshold (AT) is adjustable from 40 - 700 mV

- **AUDIO:** Dual or single tone click per event through a built-in speaker with an adjustable volume control and internally switchable divide by of 1, 10, 100, and 1000 counts per click (beta only).

- **HIGH VOLTAGE:** externally adjustable from 200 - 2000 volts

- **LINEARITY:** within ± 5% of full scale for the analog ratemeter; ± 2% for the LCD

- **RESPONSE TIME:** X1 range multplier = 10 seconds, X10 = 7 sec., X100 = 2 sec., X1000 = 1.5 sec.; all response times measured from 10-90% of full scale

- **BATTERY DEPENDENCE:** Instrument calibration change less than 3% to battery endpoint

- **METER:** 1 mA, 250 degree, 8.3 cm scale, with pivot-and-jewel suspension

- **LCD:** 6 digit Liquid Crystal Display with 6.4 mm characters and a counter overflow arrow, colons indicate count in process

- **CONNECTOR:** Series "C"

- **SIZE:** 10.67 cm (4.2") H x 8.9 cm (3.5") W x 21.6 cm (8.5") L, exclusive of handle

- **WEIGHT:** 1.36kg (3 lbs.) less detector and batteries

- **FINISH:** drawn-and-cast aluminum, with computer-beige polyurethane enamel and silk-screened nomenclature

- **BATTERY LIFE:** Exceeds 350 hours with a fresh set of alkaline "D" cell batteries

- **TEMPERATURE RANGE:** -10°C to 50°C (-14°F to 122°F)

- **CROSSTALK:** No more than 10% of gross alpha counts in beta channel and no more than 1% of gross beta counts in alpha channel.

3. PRINCIPLE OF OPERATION

The Model 2224 is to be used in combination with alpha/beta scintillation or proportional detectors. The M2224 uses pulse heights discrimination to distinguish between alpha and beta pulses from the radiation detector.

The detected alpha count is displayed by selecting the α position on the three position α, α + β, and β toggle switch. The sum of the alpha and beta counts are displayed in the α + β position and beta counts are displayed in the β position. Multiply the cpm reading on the analog ratemeter by the range multiplier position. When using the LCD and preset count time interval, the counts are accumulated in each of the three channels during the count cycle. The alpha, alpha + beta, and beta counts can be displayed by selecting the appropriate α, α + β, β channel. The count cycle is started by depressing the pushbutton switch located in the end of the carrying handle.

The RESET pushbutton switch resets the meter pointer to zero. The detector operating voltage is displayed on the meter dial, 0-2 kV (kilovolts), by depressing the HV switch. The OL (overload) lamp, located it the lower right-hand corner of the meter dial, is to indicate that the detector is saturated either by a puncture in the detector face on a scintillation detector or an exposure to a radiation field above the counting capability of the M2224. The analog meter will deflect full scale when the OL lamp is illuminated.

4. PRELIMINARY INSTRUCTIONS

4.1 Unpacking and Repacking

- Remove calibration certificate and place in secure location. Remove instrument and accessories (batteries, cable, etc.) and ensure that all of the items listed on the packing list are in the carton. If more than one instrument (M2224 and detector) is in carton refer to the calibration certificate for serial number match.

- To return instrument for repair or calibration provide sufficient packing material to prevent damage during shipment. Provide appropriate warning labels to ensure careful handling. Include detector(s) and related cable(s) for calibration. Include brief information as to the reason for return and return shipping instructions (address, P.O.#, etc.).

5. OPERATING INSTRUCTIONS

5.1 Safety Measures

CAUTION

The high voltage (HV) constant current output is limited by the internal circuitry to approximately. 50 microamps, but a mild electric shock may occur if you make contact with the input connector. Switch the M2224 to the OFF position before connecting or disconnecting the cable or detector.

5.2 Descriptions of Controls and Functions

5.2.1 Operator Controls

- **OFF/BAT/X1000/X100/X10/X1 Switch:** A six position rotary switch to select the analog meter range multipliers and check the battery status. When switched to the BAT position the meter pointer should deflect above the left vertical mark on the BAT OK line. Moving the range selector switch to one of the range multiplier positions (X1, X10, X100, X1000) provides the operator with and overall range of 0-500 k cpm. Multiply the scale reading by the multplier for determining the actual reading.

During the initial turn ON, the meter will be driven full scale for about 2 seconds and then return to zero. The LCD will show "888888", display the processor program version, and then 0.

- **Liquid Crystal Display (LCD)**: 6 digit display that displays the scaler count for the selected channel. The display also indicates when a count is in progress by turning on two colons. The colons are turned off when the count is completed. If the counter exceeds 999999, an arrow in the upper left corner of the display turns on to indicate the overflow and the counter rolls over to zero and continues counting.

- **VOL**: The volume control for the speaker. Turning this control clockwise will increase the speaker volume and counterclockwise will decrease the volume.

✓NOTE: The volume should be turned down when not required to reduce battery drain.

- **α/α+β/β Switch**: A three-position toggle switch used to select the sum of both alpha and beta count channels (α+β), alpha count only (α), or beta count only (β), for display. This switch affects both the ratemeter and the counter. The separate ratemeter and counter channels are active regardless of the switch position and will continue to function when the channel is not selected for display. This allows the operator to view each channel separately or together by simply selecting the appropriate switch position.

- **HV**: When depressed, provides a readout of the detector high voltage on the meter. Use the 0-2 kV meter scale.

- **RESET:** When depressed, provides a rapid means to drive the analog ratemeter to zero.

- **Count Pusthbutton Switch (located in carrying handle):** When depressed, resets the counter to zero and starts the timer. The colons on the display will turn on and stay on until the count time has expired.

■ Remove the CAL cover to access the following control.

- **HV Adjustment**: Provides a means to vary the high voltage from 200 to 2000 volts.

5.2.2 Internal Controls

■ Remove the instrument cover (can) to access the following controls.

- **AUDIO Divide Select Switch:** A two-pole DIP switch (1 & 2) used to select the audio divide ratios of 1, 10, 100, 1000.

✓ NOTE: The AUDIO divide function only effects the lower frequency beta tones. The higher frequency alpha clicks per events will be unaffected by the divide by selection.

The ratio is selected from the following table. O is open and C is closed.

SWITCH 1	SWITCH 2	DIVIDE BY RATIO
C	C	1
O	C	10
C	O	100
O	O	1000

- **COUNT TIME Select Switch:** A two-pole DIP switch (3 & 4) used to select the count times of 6, 30, 60, and 120 seconds.

The count time is selected from the following table. O is open and C is closed.

SWITCH 3	SWITCH 4	COUNT TIME
C	C	6 seconds
O	C	30 seconds
C	O	60 seconds
O	O	120 seconds

- **TONE**: A one-pole DIP switch (5) used to select tone discrimination between alpha and beta count channels. When in the DUAL mode, alpha and beta pulse tones will be audible in all selector switch positions (i.e. if in the α only position and β is detected, the β tones will be heard in addition to the α tones and visa versa).

When the SNGL tone position is selected, both alpha and beta pulse tones can be heard in the α+β selection, but alpha pulses cannot be heard in the beta only channel selection and beta pulse tones will not be heard in the alpha only channel selection.

SWITCH 5	TONE MODE
C	DUAL
O	SINGLE

✓ NOTE: The following controls are utilized during calibration only and should only be performed by a qualified calibrator.

- **MTR**: A multi-turn potentiometer used to calibrate the meter to the cpm reading.

- **AT**: A multi-turn potentiometer used to vary the alpha pulse threshold from ≈ 40 to 700 mV.

- **BW**: A multi-turn potentiometer used to vary the beta pulse upper window limit from the beta threshold to the alpha threshold setting and anywhere in between those two paramenters. The beta window can be disabled by adjusting the BW control to the maximum clockwise position allowing the upper beta threshold limit to equal the alpha threshold.

- **BT**: A multi-turn potentiometer used to vary the beta pulse threshold from ≈ 2 to 15 millivolts.

- **OL**: A multi-turn potentiometer which provides a means to vary the detector current overload set point.

- **LIM**: A multi-turn potentiometer used to set the maximum HV limit to 2000 VDC.

• **HV**: A multi-turn potentiometer used to adjust the high voltage test reading to correspond with the actual high voltage output. The HV switch must be depressed during adjustment.

• **LB**: A multi-turn potentiometer used to adjust the minimum battery voltage level corresponding to the low battery indication on the meter dial. The BAT switch must be depressed during adjustment.

5.3 Operating Procedures

o Release the can latches and remove the can from the 2224 taking care not to damage the speaker wires. Using a ball point pen, set the switches for the AUDIO divide by, TONE, and COUNT TIME to the desired selection. Then replace the can and fasten the latches.

✓ NOTE: To open the Battery Lid, twist the lid button counterclockwise 1/4 turn. To close, twist clockwise 1/4 turn.

o Open the Battery Lid and install two "D" size batteries. Note (+) (-) marks on the inside of the lid. Match the battery polarity to these marks.

✓ NOTE: Center post of flashlight battery is positive. Close the battery box lid.

o Connect a detector to the M2224.

o Switch the OFF/BAT/X1000-X1 switch to the BAT position. The meter pointer should deflect above the left vertical mark on the BAT OK line. If the meter does not respond correctly, recheck that the batteries have proper polarity and are good. The LCD should show all eights, display the program version number, and then display 0.

• The detector operating parameters are established by adjusting the detector operating voltage (HV), alpha threshold, and beta window to find an optimum efficiency for the alpha/beta scintillator or proportional detector.

The threshold and window parameters can be adjusted to optimize alpha/beta count discrimination, count efficiency, and minimize "cross talk" between channels. Refer to the specific detector Operation Manual or calibration certificate for the suggested threshold and window settings. Once the thresholds and window settings are established, an operating voltage versus count rate plot should be performed for both alpha and beta count channels with alpha and beta particle emission sources.

The following procedure is example of determining the operating voltage for an alpha/beta scintillation or proportional detector:

o Connect a Ludlum Model 500 Pulser or equivalent to the Model 2224.

o Switch the 2224 to the β position. Adjust the beta threshold (BT) for 3.5 mV and the window (BW) for 30 mV. The pulser counts should be detected on the 2224 ratemeter above 3.5 ±1 mV and should shut off above 30mV.

o Switch the channel selector switch to the α position. Adjust the pulser for a 120mV pulse output and vary the AT control until counts are detected on the ratemeter.

o Depress the HV switch and adjust the HV potentiometer for 0.4 to 0.5 kV on the 0-2.0 kV scale. Connect the scintillator and switch to the β only position. Place an alpha source on the detector face.

o Slowly increase the HV potentiometer to observe an increase, then decrease, and increase again in count as the HV is increased. Decrease the HV until the ratemeter is in the "dip" of the observed count rate versus HV plot just performed. Depress the HV switch and note the HV setting.

o Plot a HV versus count rate plateau in 25 volt increments, 50 volts each side of the HV reading found in the above step (ie, HV setting for count "dip" in the above step = 675 volts, start the plot at 625 volts and increase in 25 volts steps until 725 volts is reached). Plot alpha source, beta source, and background counts for both the α and β channel positions.

o Find the optimum operating voltage from the plot which gives the greatest alpha and beta source efficiency while maintaining no greater than the maximum acceptable level of "cross talk" between channels.

o Select the desired count channel display, and proceed to use instrument.

5.4 Calibration

5.4.1 Meter Calibration

• A Ludlum Model 500 Pulser or equivalent is required. If the Pulser does not have a high voltage readout, use a high impedance voltmeter with at least 1000 Megohm input resistance to measure the detector voltage.

o Ensure that the meter movement has proper mechanical zero. The adjustment is on the front of the meter bezel. It must be adjusted to "zero" with the ON/OFF selector switch in the OFF position.

o Connect the Model 500 Pulser to the Model 2224 with the appropriate cable. Rotate the M2224 range multplier switch to the X100 position. Select the $\alpha+\beta$ channel position.

o Adjust the Pulser for 40,000 cpm and adjust the pulse amplitude to twice the beta threshold level (ie; beta threshold = 3.5mV, adjust pulser to 7-10mV).

o Remove the instrument cover and adjust the MTR potentiometer until the meter reads 400 cpm. Adjust the Pulser to 10,000 cpm and ensure ratemeter reads 100 ± 10%. Decade the Pulser and M2224 range multiplier switch to check meter linearity on the X1000, X10, X1 positions. Linearity should be within ± 10% of each reading.

o Set the LCD count time for 60 seconds. Adjust Pulser count rate to 40k cpm. Depress the count button and when count cycle is complete confirm that LCD reads within ± 2% of the incoming count rate.

o Adjust the BT, BW, and AT controls for the appropriate set points as described in section 5.3.

o Connect high impedance high voltage meter (may use the Model 500 Pulser if equipped with a HV meter) and adjust the HV control for a reading of 1000 VDC on the voltmeter.

o Depress the HV pushbutton switch and adjust the HV potentiometer located on the circuit board for a reading of 1.0 kV on the meter dial. Adjust the HV output from 500 to 1500 Vdc and confirm that the 2224 HV meter corresponds to the external voltmeter within ±10% of each reading.

o Remove batteries from the battery compartment and connect a DC power supply to the two screw terminals located at the rear of the battery compartment. The positive power supply lead should connect to the terminal with the red wire and the negative lead to the terminal with the black wire.

o Adjust the power supply for 2.2 Vdc and switch the M2224 to the $\alpha+\beta$ position. Depress the BAT pushbutton switch and adjust the LB potentiometer to align the meter needle with the low battery mark on the meter dial (vertical line to the left of BAT OK).

o Replace M2224 cover and proceed with use.

5.4.2 Detector Overload Calibration

✓ NOTE: The detector operating voltage (HV) must be determined and set before the OL (overload) adjustment is performed. If the detector operating voltage is re-adjusted, the overload adjustment must be re-adjusted.

o Adjust the OL control to the maximum counterclockwise position.

✓ NOTE: Detector saturation is when the meter response no longer increases with increasing radiation field intensity.

o For alpha/beta scintillators, expose the detector photomultiplier tube (PMT) to a small light leak by loosening the detector window. Some scintillation detectors incorporate a screw in the detector body which when removed will simulate a detector face puncture or light leak. The meter should start to decrease toward zero as light saturates the scintillation material.

o Expose just enough light to where the meter starts to decrease. Adjust the OL control until the overload LED just begins to flicker on the meter dial. The ratemeter should deflect above full meter scale at this point.

o Re-seal the detector window and expose the detector to a radiation source that will drive the meter near full scale. Confirm that the LED does not turn on and the meter remains on scale.

6. THEORY OF OPERATION

6.1 Amplifier/Power Supply board # 5390-066

Refer to schematic 390 x 63 for the following:

6.1.1 Detector Input/Amplifier

Negative going detector pulses are coupled from the detector through C021 to Amplifier U021. R023 and CR021 protects the input of U021 from inadvertent shorts. Self-biased amplifier U021 provides gain in proportion to R021 divided by R022. Transistor pins 4, 5, and 6 of U021, provides amplification. Pins 12 and 15 of U021 are coupled as a constant current source to pin 6 of U021. The output self-bias to 2V be (approximately 1.4 volts) at pin 7 of U021. This provides just enough bias current through pin 6 of U021 to conduct all of the current for the constant current source. Positive pulses from pin 7 of U021 are coupled to the discriminators through R011 and C011.

6.1.2 Alpha/Beta Discriminator

Positive pulses from amplifier U021 are coupled to comparator U012, pin 6, for alpha discrimination and pins 6 and 2 of U011 for beta discrimination. R103, Alpha Threshold, provides the reference voltage for alpha comparator U012. R106, Beta Threshold (defined as the lower threshold limit of the beta counting window) provides the reference voltage for beta threshold comparator pins 1, 2, and 3 of U011. R102, Beta Window (defined as the upper threshold limit of the beta counting window) provides the reference voltage for the beta window comparator pins 5, 6, and 7 of U011.

6.1.3 Alpha/Beta Disc. Logic Circuit

Alpha pulses from U012 are coupled to univibrator U111. Pulses at pin 6 of U111 are inverted by Q111 for connection to reset (R) pins 3 and 13 of U101. Pin 9 of U111 provides the pulses to be counted the microprocessor (μP). Pulses from pin 9 of U111 are connected to pin 3 of Ulll to provide a time delay for the μP clock cycle to complete before the next alpha pulse can be recognized by the μP.

Beta pulses from pin 1 of U011 are coupled to univibrator U101. Pulses are coupled to the μP from pin 7 of U101 as long as pins 3 and 13 of U011 remain high (+5V). When an alpha and/or a beta window pulse is present, the reset (pins 3 and 13 of U101) function is enabled and 7 of U101 remains high. Pin 7 of Up is connected to pin 13 of U101 to provide a time delay for the μP clock cycle to complete before the next beta pulse can be recognized by the μP.

6.1.4 Low Voltage Supply

Battery Voltage is coupled to switching regulator U201 and associated components to provide +5V to power op-amps and logic circuitry. The charge pump (cp) output, C202, CR211, CR212, and C201 form a voltage doubler circuit to provide +9V for U201 amplifier supply. U001 and related components provide +2.5V reference HV SET and Alpha/Beta discriminator controls. R201, LO BAT, is adjusted so that the meter pointer is aligned with the left vertical mark on the BAT OK line with 2.2 volt battery input.

6.1.5 High Voltage Supply

High Voltage is developed blocking oscillator Q421, T321, C412, and rectified by voltage multiplier CR221-CR224, C221-C223, C211, and C114. High voltage increases as current through Q421 increases, with maximum output voltage with Q421 saturated.

High voltage is coupled back through R123 to op-amp pin 2 of U311. Resistor network R211-214 completes the HV division circuit to ground. R214 provides HV limit at 2.0 kV when the HV SET control on the calibration board is at maximum. The regulated HV output is controlled by HV potentiometer located under the CAL cover on the front panel. This control provides the reference for comparator pin 3, U311. During stable operation, the voltage at pin 2 of U311 will equal the voltage at pin 3 of U311. Pin 1 of U311 will cause conduction of Q312 to increase or decrease until the HV finds a level of stability. R115, HV TEST, calibrates the analog meter to the HV output when the HV test pushbutton switch is depressed.

6.1.6 Detector Overload

A voltage drop is developed across R121 and sensed by comparator U012 as detector current increases. When the voltage at pin 3 of U012 goes below pin 2, pin 1 goes low illuminating the OL LED and driving the meter to full scale. R211, Overload, provides adjustment for the overload set point.

6.1.7 Meter Drive

Pulses are coupled from the μP board (refer to μP theory of operation) to the gate of Q302. Q302 inverts the pulses, R403 and C401 provides inergration. Integrated meter drive voltage is coupled from P1-13 via

the battery (BAT) and HV test switch to pin 5 of U311. The meter is driven by the emitter of Q111, coupled as a voltage follower in conjunction with pin 6 and 7 of U311. R104, Meter Cal, is adjusted to calibrate the ratemeter reading corresponding to the incoming count rate. R405 and R406 provide temperature compensation for changes in the meter resistance due to temperature variations.

6.2 Processor Bd.# 5390-095

Refer to schematic 390 x 97 for the following:

6.2.1 Power supply

Battery voltage is coupled to switching regulator U201 and associated components to provide +5V to power the µP and display drivers U211, 212. R101, C101, Q101, and Q201 form a delay switch which allow the U321 to stabilize before the load current is connected to the +5V supply.

6.2.2 Microproccessor (µP)

U311, Intel N87C51FA, controls all of the data, control inputs, and display information. The clock frequency is crystal controlled by Y211 and related components at 6.144 MHz. The µP incorporates internal memory (ROM) storing the program information. C311 resets the µP at power-up to initiate the start of the program routine. During the program loop the µP looks at all of the input switches for initiation or status changes and responds accordingly.

The µP uses Pulse-width Modulation to control the analog ratemeter. The analog output, RATE (P3-4), is divided into 255 increments in a 166 µs period. At full meter deflection the low pulse period, leading edge to leading edge, will be 166 µs, 500 cpm = 130 µs, 400 cpm = 104 µs, 200 cpm = 52 µs, 100 cpm = 26 µs, and 0 = no pulse or +5V. The pulses are inverted by Q302 on the Amplifier/Power Supply board and then integrated by R403, C401.

6.2.3 LCD Drive

U211 and U212 make up the liquid crystal display drive circuitry. The display information is sent from the µP to U211 and 212 via BUS0-3 and ADD0-1 data lines. When the SELECT' line is brought low by the µP, the data is transferred and latched into the drivers until the SELECT' line is brought low again. The corresponding digits and segments are illuminated corresponding to the stored count information from the µP.

6.2.4 Audio

Alpha and/or beta audio pulse frequency is generated by the µP and coupled to Q204. Q204 then inverts the pulses and drives the negative side of the speaker. Bias voltage is provided by the volume control via Q202 and 203 and related circuitry.

7. MAINTENANCE

Instrument maintenance consists of keeping the instrument clean and periodically checking the batteries and the calibration.

An instrument operational check should be performed prior to each use by exposing the detector to a known source and confirming the proper reading on each scale.

Re-calibration should be accomplished after any maintenance or adjustment of any kind has been performed on the instrument. Battery replacements are not considered to be maintenance and do not normally require the instrument to be recalibrated.

Ludlum Measurements recommends recalibration at intervals no greater than one year. Check the appropriate regulatory agencies regulations to determine required recalibration intervals.

The batteries should be removed and the battery contacts cleaned of any corrosion at least every three months. If the instrument has been exposed to a very dusty or corrosive atmosphere, more frequent battery servicing should be used.

Use a spanner wrench to unscrew the battery contact insulators, exposing the internal contacts and battery springs. Removing the handle will facilitate access to these contacts.

NOTE

NEVER STORE THE INSTRUMENT OVER 30 DAYS WITHOUT REMOVING BATTERIES. ALTHOUGH THIS INSTRUMENT WILL OPERATE AT VERY HIGH AMBIENT TEMPERATURES, BATTERY SEAL FAILURE CAN OCCUR AT TEMPERATURES AS LOW AS 100° FAHRENHEIT.

PARTS LIST

Ref. No.	Description	Part No.
Model 2224 Scaler/Ratemeter		
UNIT	Completely Assembled Model 2224 Scaler/Ratemeter	48-2494
Amp/Power Supply, Drawing 390 X 63		
BOARD	Completely Assembled Amp/PS Board	5390-066
• **CAPACITORS**		
C001	100pF, 100V	04-5661
C002	47pF, 100V	04-5560
C011	0.1µF, 50V	04-5663
C012-C014	0.001µF, 100V	04-5659
C015	0.1µF, 50V	04-5663
C016	0.01µF, 50V	04-5664
C017	10µF, 20V	04-5655
C021	100pF, 3Kv	04-5532
C022	10pF, 100V	04-5673
C101-C102	47pF, 100V	04-5560
C111-C113	47pF, 100V	04-5560
C114	0.0047µF, 3kV	04-5547
C121-C122	0.0047µF, 3kV	04-5547
C201-C202	10µF, 20V	04-5655
C203	330pF, 100V	04-5657
C211	0.0047µF, 3kV	04-5547
C212	68µF, 6.3V	04-5654
C213	1µF, 35V	04-5656
C214	0.01µF, 50V	04-5664
C221-C223	0.0047µF, 3kV	04-5547
C301	68µF, 6.3V	04-5654
C311	0.1µF, 50V	04-5664
C401	0.1µF, 50V	04-5663
C411	0.1µF, 50V	04-5663
C412	1µF, 35V	04-5656
C421	68µF, 6.3V	04-5654
• **TRANSISTORS**		
Q111	2N7002L	05-5840
Q301	MMBT4403LT	05-5842
Q302	2N7002L	05-5840
Q311-C312	MMBT3904T	05-5841
Q421	MJD210	05-5843
• **INTEGRATED CIRCUITS**		
U001	LM285M-2.5	06-6291
U011-U012	TLC372ID	06-6290
U021	CA3096M	06-6288
U101	CD74HC4538M	06-6297
U111	CD74HC4538M	06-6297
U201	MAX631AESA	06-6285
U311	TLC27M7ID	06-6292
• **DIODES**		
CR021	MMBD7000LT1	07-6355
CR111-112	MMBD914L	07-6353
CR211-CR212	BAT54	07-6354
CR221-CR225	GI250-2	07-6266
CR411	MMBD914L	07-6353
• **RESISTORS**		
R001	22.1k, 1%	12-7843
R002	249k, 1%	12-7862
R003	22.1k, 1%	12-7843
R004	1.5k, 1%	12-7878
R011	100 OHM, 1%	12-7840
R013	22.1k, 1%	12-7843
R014	33.2k, 1%	12-7842
R015	10k, 1%	12-7839
R016	22.1k, 1%	12-7843
R017	10k, 1%	12-7839
R021	392k, 1%	12-7841
R022-R023	10k, 1%	12-7839
R024	33.2k, 1%	12-7842
R025	22.1k, 1%	12-7843
R026	1 MEG	10-7028
R101	100k, 1%	12-7834
R102-R103	1 MEG TRIMMER	09-6906
R104	22.1k, 1%	12-7843
R105	100k, 1%	12-7834
R106	10k TRIMMER	09-6921
R111	100 OHM 1%	12-7840
R112	1G	12-7686
R113-R114	100k, 1%	12-7834
R115	1 MEG TRIMMER	09-6906
R116	249k, 1%	12-7862
R121	4.7 MEG	10-7030
R122	1 MEG	10-7028
R123	1G	12-7686
R201	200k TRIMMER	09-6908
R211	1 MEG TRIMMER	09-6906
R212-R213	1 MEG, 1%	12-7844
R214	1 MEG TRIMMER	09-6906
R215	1 MEG, 1%	12-7844
R301	2.21k, 1%	12-7835
R302	200 OHM, 1%	12-7846
R311	10k, 1%	12-7839

R312	22.1k, 1%	12-7843
R313	2.21k, 1%	12-7835
R314	10k, 1%	12-7839
R401	221k, 1%	12-7845
R402	7.5k, 1%	12-7847
R403	1M, 1%	12-7844
R404	5k TRIMMER	09-6907
R406	301 OHM, 1%	12-7863
R407	1k, 1%	12-7832
R411	200 OHM, 1%	12-7846
R412	10k, 1%	12-7839

- **THERMISTORS**

R405	03006-165.9-55G100	07-6366

- **INDUCTORS**

L301	220µH	21-9678

- **TRANSFORMERS**

T321	L8050	40-0902

- **MISCELLANEOUS**

P1	CONN-1-640456-5 MTA100	13-8355
P2	CONN-640456-3 MTA100	13-8081
*	M2222 BD. SHIELD	7390-044
*	RECEPTACLE (8 ea) Cloverleaf 011-6809	18-8771

Processor Board, Drawing 390 x 97

BOARD	Assembled Processor	5390-095

- **CAPACITORS**

C101	0.15µF, 50V	04-5665
C110	47µF, 10V	04-5666
C211-C212	27pF, 100V	04-5658
C221	68µF, 6.3V	04-5654
C311-312	10µF, 20V	04-5655
C321	330pF, 100V	04-5657
C322	68µF, 6.3V	04-5654

- **TRANSISTORS**

Q101	2N7002L	05-5840
Q201	MMBT4403L	05-5842
Q204	2N7002L	05-5840
Q311	MMBT4403L	05-5842

- **INTEGRATED CIRCUITS**

U211-U212	ICM7211AMIQH	06-6294
U311	N87C51FA	06-6286
U321	MAX631AESA	06-6285

- **RESISTORS**

R101	1M, 1%	12-7844
R102	10k, 1%	12-7839
R211	2.21k, 1%	12-7835
R221	150k, 1%	12-7833
R222	100k, 1%	12-7834
R301-R306	22.1k, 1%	12-7843

- **RESISTOR NETWORK**

RN401	220k	12-7831

- **CRYSTALS**

Y211	6.144 MHZ	01-5262

- **SWITCHES**

S301	90HBW06S	08-6710

- **INDUCTOR**

L311	150µH	21-9677

- **MISCELLANEOUS**

P3	CONN-1-640456-6 MTA100	13-8134
P4	CONN-640456-2 MTA100	13-8073
*	SOCKET-44P	06-6293

Calibration Board, Drawing 390 x 100

BOARD	Completely Assembled Calibration Board	5390-096

- **LEDS**

DS1	HLMP4700	07-6356
	LED-SPACER 456-500	07-6349

- **RESISTORS**

R3	250k TRIMMER	09-6819

- **MISCELLANEOUS**

P7	CONN-640456-5 MTA100	13-8057

Display Board, Drawing 390 x 127

BOARD	Completely Assembled Display Board	5390-118

- **CONNECTORS**

DSPI	LCD 7728-365-481	07-6351
J6	CONN-52 POS CP50	13-8410

Interconnect Board, Drawing 390 x 124

BOARD	Completely Assembled Interconnect Board	5390-117

- **CONNECTORS**

J5	CONN-52 POS CP50	13-8410

Chassis Wiring Diagram, Drawing 390 X 103

- **AUDIO**

DS1	UNIMORPH	21-9251

- **CONNECTOR**

J1	CONN-1-640442-5 MTA100	13-8383
J2	CONN-640442-3 MTA100	13-8135
J3	CONN-1-640442-6 MTA100	13-8187
J4	CONN-640442-2 MTA100	13-8178
J7	CONN-640442-5 MTA100	13-8140
J8	Series "C" UG706/U	13-7751

- **SWITCHES**

S1	PA-600-210	08-6501
S2	#923 SWTCHCRFT	08-6518
S4	30-1-PB GRAYHILL	08-6517
S5	7103SYZQE TOGGLE	08-6720

- **BATTERY**

B1-B2	"D" Duracell Battery	21-9313

- **MISCELLANEOUS**

J10	JACK-09-9011-1-0419	18-9080
M1	METER ASSY	4390-136
*	HANDLE ASSY	4408-075

DRAWINGS AND DIAGRAMS

Amp/Power Board, Drawing 390 x 63
Amp/Power Supply Board Component Layout, Drawing 390 x 64

Processor Board, Drawing 390 x 97
Processor Board Component Layout, Drawing 390 x 98

Calibration Board, Drawing 390 x 100
Calibration Board Component Layout, Drawing 390 x 101

Display Board, Drawing 390 x 127
Display Board Component Layout, 2 sheets, Drawing 390 x 128

Interconnect Board, Drawing 390 x 124
Interconnect Board Component Layout, Drawing 390 x 125

Wiring Diagram, Drawing 390 x 103

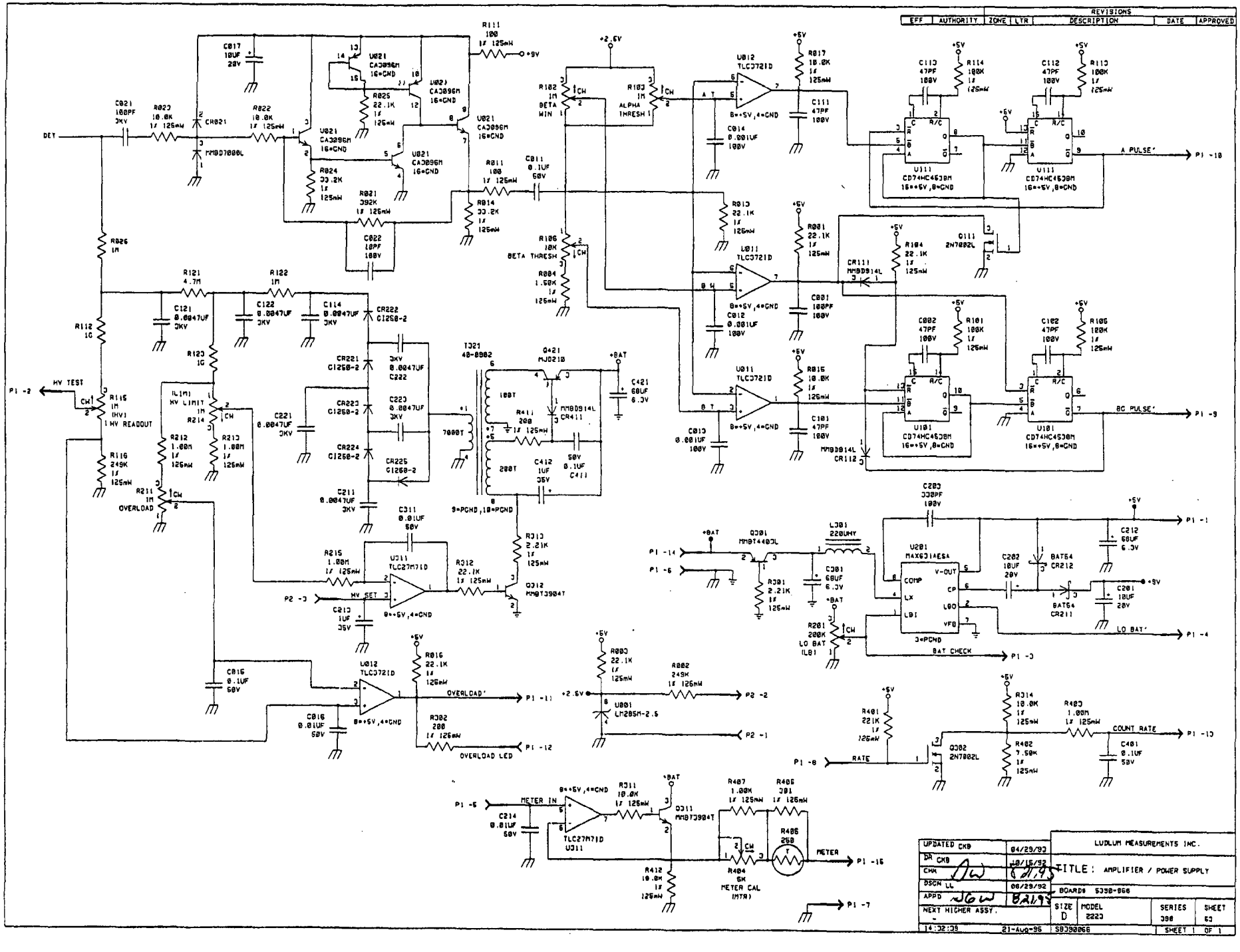
REVISIONS
EFF | AUTHORITY | ZONE | LTR | DESCRIPTION | DATE | APPROVED
DET
HV TEST
P1 -2
HV READOUT
OVERLOAD
HV SET
P2 -3
OVERLOAD'
P1 -11
OVERLOAD LED
P1 -12
METER IN
P1 -5
METER
P1 -16
P1 -7
A PULSE'
P1 -10
BC PULSE'
P1 -9
P1 -14
P1 -6
P1 -1
LO BAT'
P1 -4
BAT CHECK
P1 -3
P2 -2
P2 -1
RATE
P1 -8
COUNT RATE
P1 -13
BETA WIN
ALPHA THRESH
BETA THRESH
LO BAT ILB1
METER CAL (MTR)
UPDATED CKD
DR CKD
CHK
DSGN LL
APPD
NEXT HIGHER ASSY.
LUDLUM MEASUREMENTS INC.
TITLE: AMPLIFIER / POWER SUPPLY
BOARD# 5390-066
SIZE D
MODEL 2223
SERIES 390
SHEET 63
SHEET 1 OF 1
14:32:39
21-Aug-96
S0390066

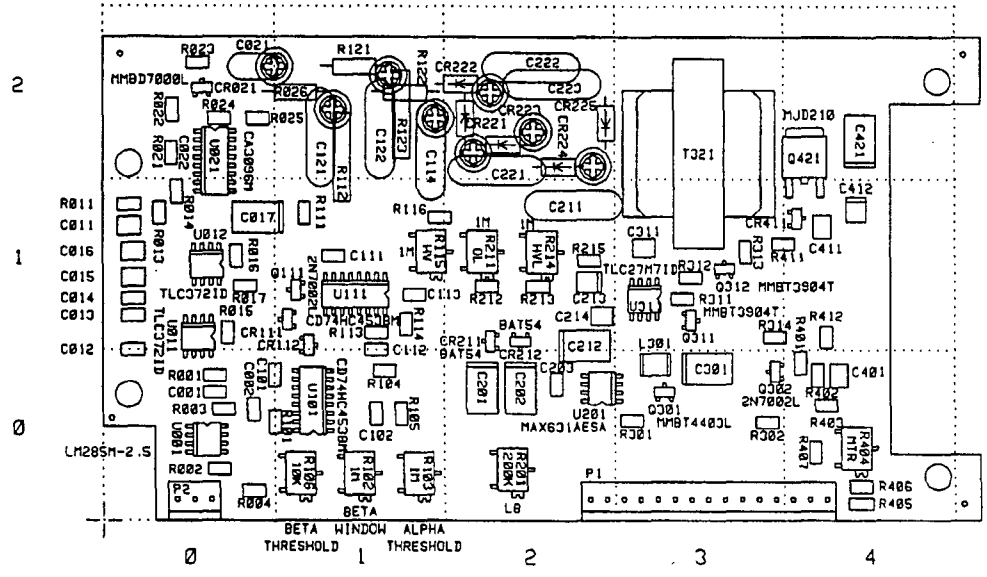

LUDLUM MEASUREMENTS INC. SHEETWATER, TX.

DR	CKB 04/29/93	TITLE: AMPLIFIER / POWER SUPPLY	
CHK DW	8/21/95	BOARD# 5390-066	85390066
DSGN LL	06/29/92	MODEL 2223 / SERIES 390	SHEET 64
APP JGW	8/21/95		
14:33:04	21-Aug-95	COMP SIDE ☐ SLDR SIDE ☐ OUTLINE ☒	
COMP PASTE ☐	COMP MASK ☐	SLDR PASTE ☐ SLDR MASK ☐	

REVISIONS						
EFF	AUTHORITY	ZONE	LTR	DESCRIPTION	DATE	APPROVED

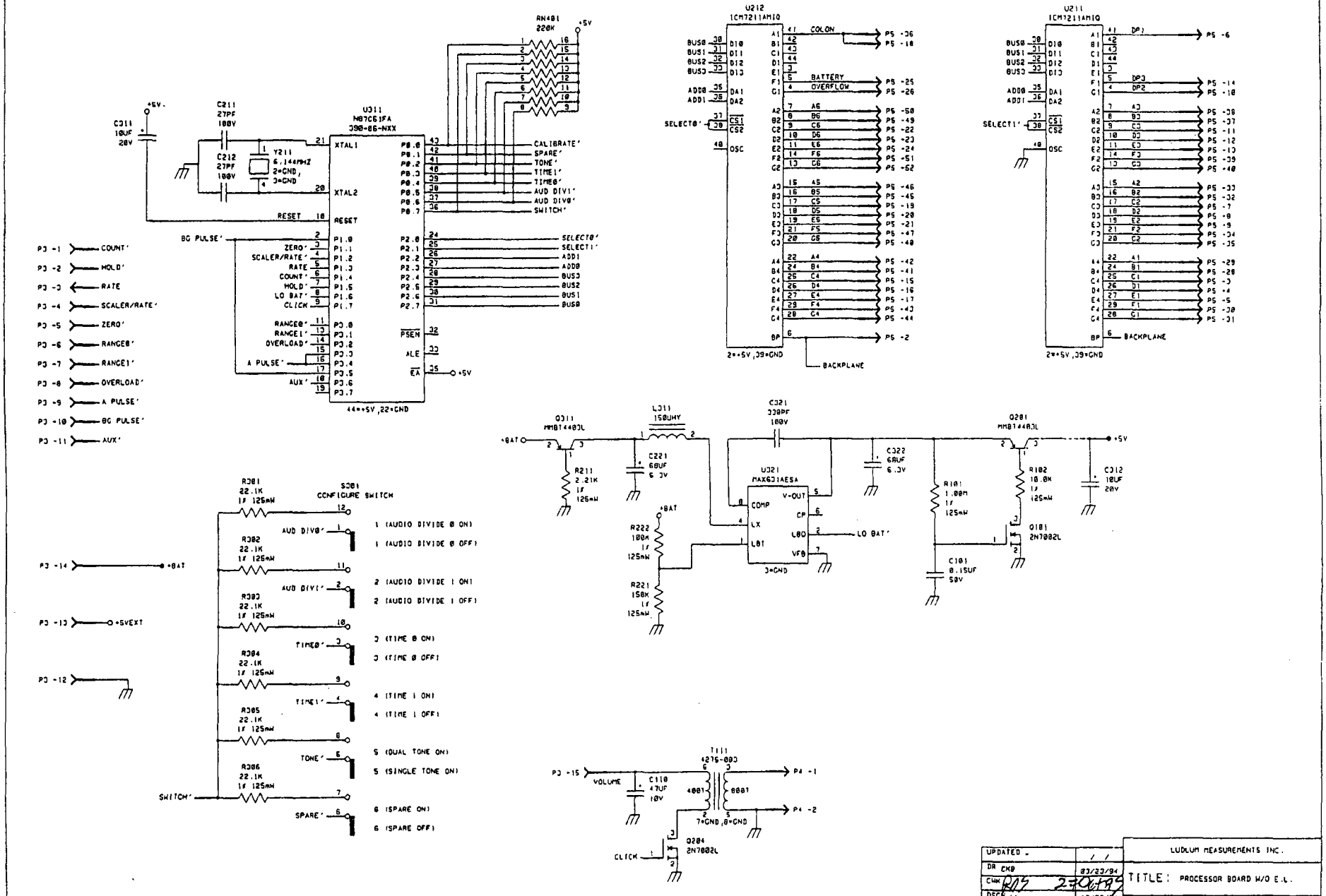

UPDATED	/ /	LUDLUM MEASUREMENTS INC.
DR EKB	03/23/94	TITLE: PROCESSOR BOARD W/O E.L.
CHK RAS	2-10-95	
DSGN LL	12/29/91	BOARD# 5390-095
APPD JGW	10-27-95	SIZE D · MODEL 2224 · SERIES 390 · SHEET 97
NEXT HIGHER ASSY.		
18:58:23	27-Oct-95	5B390095 · SHEET 1 OF 1

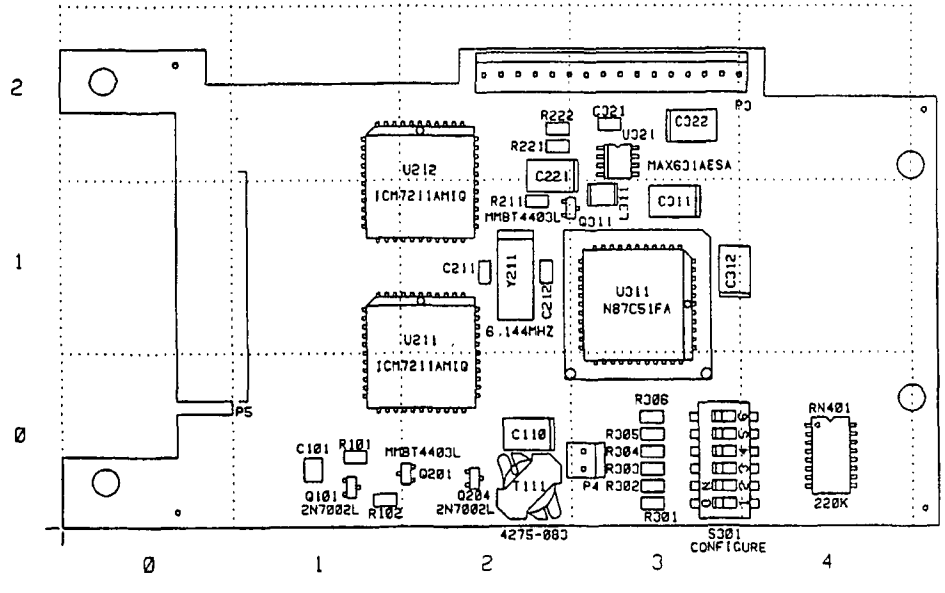

LUDLUM MEASUREMENTS INC. SWEETWATER, TX.

DR	CKB 03/23/94	TITLE: PROCESSOR BOARD W/O E.L.	
CHK RDS	27-Oct-95		
DSCN LL	8/12/91	BOARD# 6390-095	BS390095
APP JGW	10/27/95	MODEL 2224 / SERIES 390	SHEET 98
10:58:46 27-Oct-95		COMP SIDE ☐ SLDR SIDE ☐ OUTLINE ☒	
COMP PASTE ☐	COMP MASK ☐	SLDR PASTE ☐	SLDR MASK ☐

REVISIONS						
EFF	AUTHORITY	ZONE	LTR	DESCRIPTION	DATE	APPROVED

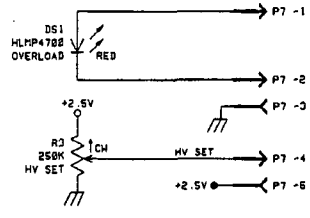

UPDATED -	/ /	LUDLUM MEASUREMENTS INC.	
DR CKB	04/01/94	TITLE: CALIBRATION BOARD	
CHK RDS	27-OCT-95		
DSGN LL	06/12/91	BOARD# 5390-096	
APPD JGW	10/27/95		
NEXT HIGHER ASSY. -		SIZE D / MODEL 2224 / SERIES 390 / SHEET 100.	
10:59:00	27-Oct-95	58390096	SHEET 1 OF 1

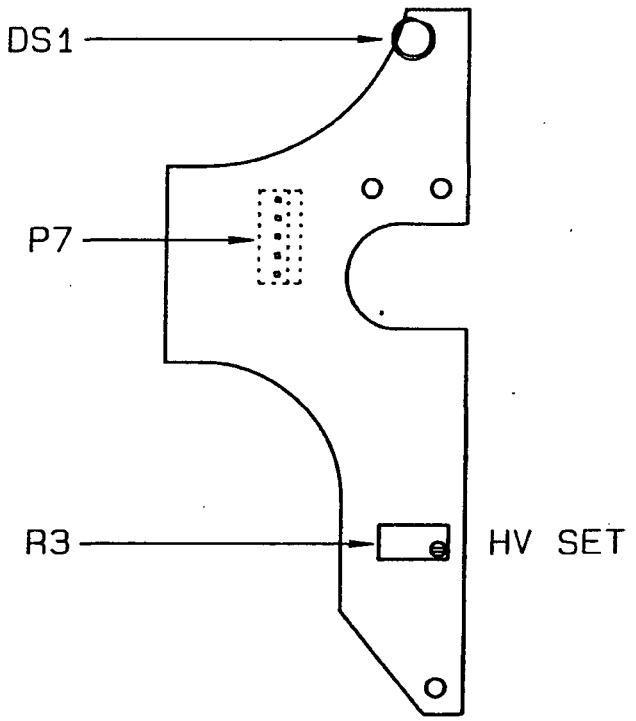

DESC: CALIBRATION BOARD	
MODEL: 2224	
PART #: 5390-096	
DWN: CKB	DATE: 04/01/94
DSGN:	DATE:

CHG NO.				DWN	CHK	APP
DWN CKB	DATE 04/01/94	CHK	DATE 27Oct95	APP	DATE 10/30/95	EST
TOL:			SCALE:		
TITLE MODEL 2224 CALIBRATION BOARD					
LUDLUM			390	101	

REVISIONS						
EFF	AUTHORITY	ZONE	LTR	DESCRIPTION	DATE	APPROVED

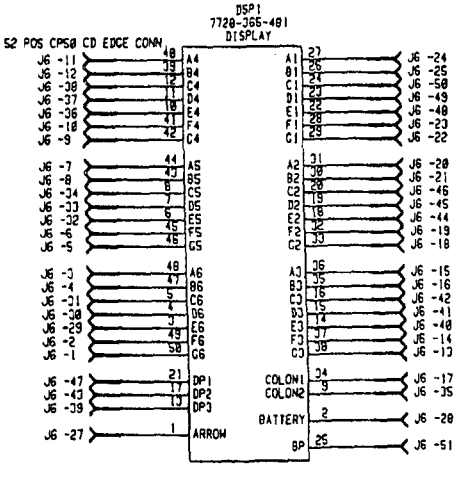

UPDATED	-		LUDLUM MEASUREMENTS INC.
DR	ACF	02-JUN-99	TITLE: DISPLAY BOARD
CHK	PLW	6-2-99	
DSGN	JCW	17-JUL-95	BOARD# 5390-118
APPD	RS	6-2-99	SIZE C / MODEL 2224/2224-1 / SERIES 390 / SHEET 127
NEXT HIGHER ASSY. -			
18:17:35		2-Jun-99	5B390118 / SHEET / OF 1

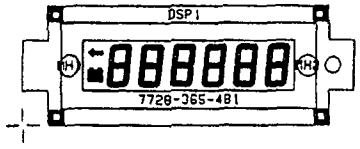

LUDLUM MEASUREMENTS INC. SWEETWATER, TX.			
DR ACF	02-JUN-99	TITLE: DISPLAY BOARD	
CHK A.W.	6-2-99	BOARD: 5390-118	
DSGN JGW	17-JUL-95	MODEL: 2224	
APP BS	6-2-99	FILENAME: BS390118	
COMPONENT	SOLDER	10:21:06	2-Jun-99
		REVISION	SERIES / SHEET
OUTLINE	OUTLINE	1.0	390 / 128

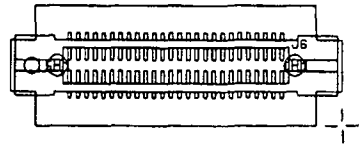

LUDLUM MEASUREMENTS INC. SWEETWATER, TX.				
DR ACF	02-JUN-99	TITLE: DISPLAY BOARD		
CHK PW	6-2-99	BOARD# 5390-118		
DSGN JGW	17-JUL-95	MODEL 2224	SERIES 390	SHEET 128
APP BSS	6-2-99	COMP ARTWORK ☐	SLDR ARTWORK ☐	
		COMP OUTLINE ☐	SLDR OUTLINE ☒	
COMP PASTE ☐	COMP MASK ☐	SLDR PASTE ☐	SLDR MASK ☐	

EFF	AUTHORITY	ZONE	LTR	REVISIONS DESCRIPTION	DATE	APPROVED

5390-118
DISPLAY BOARD

M 2224 PROCESSOR BOARD 5390-095
M 2224-1 PROCESSOR BOARD 5390-100
52 POS. CP50 CD EDGE CONN.

P6 -1	G6	J5 -52
P6 -2	F6	J5 -51
P6 -3	A6	J5 -50
P6 -4	B6	J5 -49
P6 -5	G5	J5 -48
P6 -6	F5	J5 -47
P6 -7	A5	J5 -46
P6 -8	B5	J5 -45
P6 -9	G4	J5 -44
P6 -10	F4	J5 -43
P6 -11	A4	J5 -42
P6 -12	B4	J5 -41
P6 -13	G3	J5 -40
P6 -14	F3	J5 -39
P6 -15	A3	J5 -38
P6 -16	B3	J5 -37
P6 -17	COLON1	J5 -36
P6 -18	G2	J5 -35
P6 -19	F2	J5 -34
P6 -20	A2	J5 -33
P6 -21	B2	J5 -32
P6 -22	G1	J5 -31
P6 -23	F1	J5 -30
P6 -24	A1	J5 -29
P6 -25	B1	J5 -28
P6 -26	EL BACKLIGHT 1	J5 -27
P6 -27	OVERFLOW	J5 -26
P6 -28	BATTERY	J5 -25
P6 -29	E6	J5 -24
P6 -30	D6	J5 -23
P6 -31	C6	J5 -22
P6 -32	E5	J5 -21
P6 -33	D5	J5 -20
P6 -34	C5	J5 -19
P6 -35	COLON2	J5 -18
P6 -36	E4	J5 -17
P6 -37	D4	J5 -16
P6 -38	C4	J5 -15
P6 -39	DP3	J5 -14
P6 -40	E3	J5 -13
P6 -41	D3	J5 -12
P6 -42	C3	J5 -11
P6 -43	DP2	J5 -10
P6 -44	E2	J5 -9
P6 -45	D2	J5 -8
P6 -46	C2	J5 -7
P6 -47	DP1	J5 -6
P6 -48	E1	J5 -5
P6 -49	D1	J5 -4
P6 -50	C1	J5 -3
P6 -51	BP	J5 -2
P6 -52	EL BACKLIGHT 2	J5 -1

UPDATED	-	LUDLUM MEASUREMENTS INC.
DR CKB	07/17/95	TITLE: DISPLAY INTERCONNECT BOARD
CHK T.W.	6-16-99	
DSGN JGW	07/17/95	BOARD# 5390-117
APPD ROS	16JUN99	SIZE C · MODEL 2224/2224-1 · SERIES 390 · SHEET 124
NEXT HIGHER ASSY.		
09:23:52	16-Jun-99	5B390117 · SHEET OF

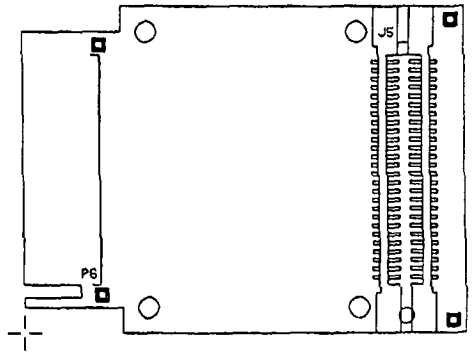

LUDLUM MEASUREMENTS INC. SWEETWATER, TX.

DR CKB	07/17/95	TITLE: DISPLAY INTERCONNECT BRD.	
CHK	6-2-99	BOARD: 5390-117	
DSGN JCW	07/17/95	MODEL: 2224	
APP	6-2-99	FILENAME: BS390117	
COMPONENT	SOLDER	13:34:28	1-Jun-99
		REVISION	SERIES / SHEET
OUTLINE	OUTLINE	1.0	390 / 125

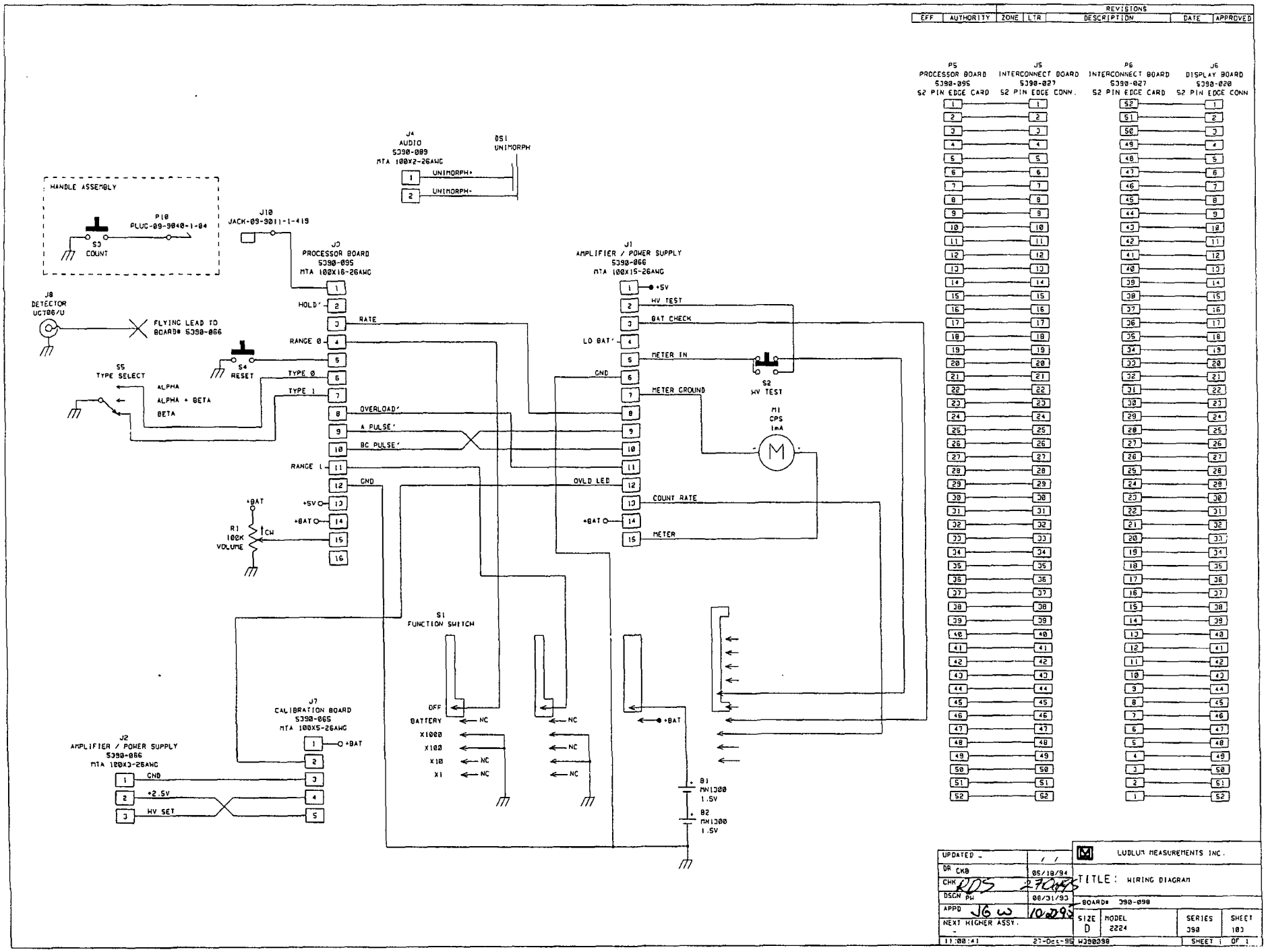
REVISIONS
EFF
AUTHORITY
ZONE
LTR
DESCRIPTION
DATE
APPROVED
HANDLE ASSEMBLY
P10
PLUC-09-9040-1-04
S3
COUNT
J10
JACK-09-3011-1-419
J4
AUDIO
5390-089
MTA 100X2-26AWG
UNIMORPH+
UNIMORPH-
DS1
UNIMORPH
J8
DETECTOR
UC786/U
FLYING LEAD TO
BOARD# 5390-066
S4
RESET
S5
TYPE SELECT
ALPHA
ALPHA + BETA
BETA
J3
PROCESSOR BOARD
5390-095
MTA 100X16-26AWG
HOLD'
RATE
RANGE 0
TYPE 0
TYPE 1
OVERLOAD'
A PULSE'
BC PULSE'
RANGE 1
GND
+5V
+BAT
R1
100K
VOLUME
CW
J1
AMPLIFIER / POWER SUPPLY
5390-066
MTA 100X15-26AWG
+5V
HV TEST
BAT CHECK
LO BAT'
METER IN
GND
METER GROUND
OVLD LED
COUNT RATE
+BAT
METER
S2
HV TEST
M1
CPS
1mA
S1
FUNCTION SWITCH
OFF
BATTERY
X1000
X100
X10
X1
NC
J7
CALIBRATION BOARD
5390-065
MTA 100X5-26AWG
J2
AMPLIFIER / POWER SUPPLY
5390-066
MTA 100X3-26AWG
GND
+2.5V
HV SET
B1
MN1300
1.5V
B2
MN1300
1.5V
P5
PROCESSOR BOARD
5390-095
52 PIN EDGE CARD
J5
INTERCONNECT BOARD
5390-027
52 PIN EDGE CONN.
P6
INTERCONNECT BOARD
5390-027
52 PIN EDGE CARD
J6
DISPLAY BOARD
5390-020
52 PIN EDGE CONN
UPDATED
DR CKB
CHK
DSGN PW
APPD
NEXT HIGHER ASSY.
05/10/94
06/31/93
LUDLUM MEASUREMENTS INC.
TITLE: WIRING DIAGRAM
BOARD# 390-098
SIZE D
MODEL 2224
SERIES 390
SHEET 103
SHEET 1 OF 1
11:08:41
27-Oct-95
W390098

LUDLUM MODEL 2350-1
DATA LOGGER

Calibration Routines,
Parts List, and Schematics
August 1999

LUDLUM MEASUREMENTS, INC.
501 OAK ST., P.O. BOX 810
SWEETWATER, TX 79556
915/235-5494; FAX: 915/235-4672

TABLE OF CONTENTS

1. INITIAL INSTRUMENT CALIBRATION 4
   1.1 Equipment Required 4
   1.2 Instrument Preparation 4
   1.3 Threshold and Window Calibration 4
   1.4 High Voltage Calibration 5
   1.5 Overload Calibration 5
   1.6 Alarm Setpoints 6

2. CALIBRATION ROUTINES 7
   Source Parameters and Typical Values for Dead Time and Calibration Constants . 7
   2.1 High Voltage Ramp Routine 8
   2.2 Calibration Constant and Dead Time Calibration with background subtract 10
   2.3 Calibration Constant Using a Single Point with Background Subtract 12
   2.4 Dead Time Calibration Using 2 Source Method with Background Subtract 14

3. THEORY OF OPERATION 16
   3.1 Amplifier/Power Supply Board 16
   3.2 Central Processor Board 18
   3.3 I/O Interface Board 19
   3.4 64k Memory Expander Board 20

4. PARTS LIST, COMPONENT LAYOUT, AND SCHEMATICS 21
   4.1 Amplifier / Power Supply Board Component Layout 23
   4.2 Amplifier / Power Supply Board Schematic 23
   4.3 Central Processor Board Component Layout 25
   4.4 Central Processor Board Schematic 25
   4.5 64k Memory Expander Board Component Layout 26
   4.6 64k Memory Expander Board Schematic 26
   4.7 I/O Interface Board Component Layout 27
   4.8 I/O Interface Board Schematic 27
   4.9 Backplane Board Component Layout 27
   4.10 Backplane Board Schematic 28
   4.11 Chassis Wireing Diagram 28

1. INITIAL INSTRUMENT CALIBRATION

1.1 Equipment Required

All instruments used in calibrating the Model 2350-1 must be calibrated by standards traceable to the National Institute of Standards and Technology and must have a current calibration label attached.

1. Ludlum Model 500 Pulser.
2. High Impedance voltmeter with at least 1000 megohms meter resistance and an accuracy of 0.5%.
3. Overload simulator (1000 megohm resistor).

1.2 Instrument Calibration

The following procedures will calibrate the electronics only. To program the instrument please refer to section 6. OPERATING INSTRUCTIONS of the Model 2350-1 Data Logger Manual.

WARNING:

The following procedures require that the instrument be re-initialized. This will clear all logged data and return all programmable settings to their default values. **DETECTOR SETUPS AND LOGGED DATA WILL BE PERMANENTLY LOST.**

1. Turn the Model 2350-1 ON. The display will temporarily go black and then the following two displays will appear for a few seconds each. Then the display that was active when the instrument was turned off will appear.

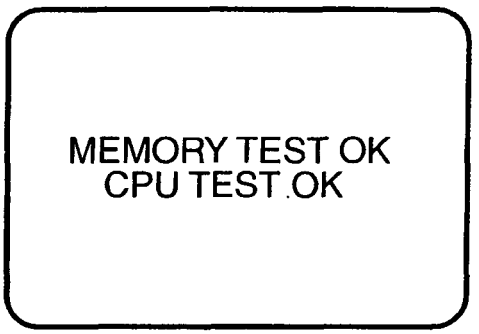

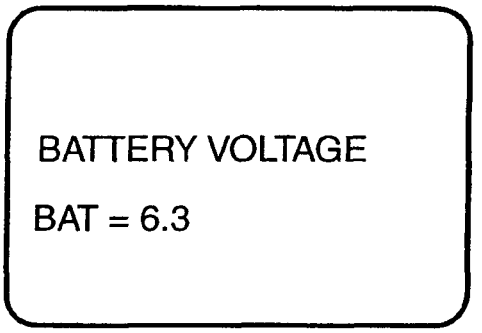

2. Re-initialize the instrument by entering the cold initialize command (**SSR**).
3. Check the battery voltage on the parameters display (**SVD1**). If it reads below 5.5 volts replace the batteries with fresh alkaline batteries and proceed.

Threshold and Window Calibration

4. Change the display time base to minutes (**SB1**) display units to counts (**SU7**), and the threshold to 100 (**T100**).
5. Turn the Model 500 Pulser polarity switch to the negative position.
6. Set the pulse amplitude range selector to the 50 mV position, and the LO-HI control to the maximum clockwise position.
7. Set the pulse frequency multiplier to the 1k position and adjust the pulse frequency so that the output is 400k cpm.
8. Connect the Model 2350-1 to the Pulser and verify that the ratemeter reads between 392-408kC/m.
9. Adjust the pulser amplitude control until the meter reads approximately 10 mV. The ratemeter display should read approximately 75% of the count input (**300 kC/m**).

1. INITIAL INSTRUMENT CALIBRATION

10. If the instrument does not read approximately 300 kC/m adjust the gain pot (R10) on the main board until it reads properly.

NOTE: The instrument threshold is now set at 100 = 10 mV

11. Turn the window ON (**WON**), and set it to 100 (**W100**).
12. Adjust the pulse amplitude control until it reads approximately 20 mV. The ratemeter reading should again indicate approximately 75% of the counts (**300 kC/m**).
13. Adjust the threshold setting to 200 (**T200**), 300 (**T300**), and 400 (**T400**) repeating the above procedure each time to verify that the threshold and window settings are linear.
14. Turn the window off (**WOFF**) and reset the threshold to 100 (**T100**).

High Voltage Calibration

15. Disconnect the instrument from the pulser and connect it to a high impedance voltmeter.
16. Set the high voltage to 1500 volts (**H1500**).
17. If the voltmeter does not read from 1498 - 1502 volts adjust the HV pot (**R52**) on the main board until it reads within tolerance.
18. Adjust the high voltage to 500 volts (**H500**). The voltmeter should read between 490 - 510 volts.
19. Adjust the high voltage to 2000 volts (**H2000**). The voltmeter should read between 1940 - 2060 volts.

Overload Calibration

21. Disconnect the instrument from the voltmeter, and connect it to the overload simulator resistor box.
22. Change to the Alarm Display (**SVD3**).
23. Turn the overload on (**OON**), and set it to 15.0 μA (**O150**).
24. Change to the Parameter Display (**SVD1**).
25. Set the high voltage to 1500 volts (**H1500**).
26. Change to the Main Display (**SVD0**). The ratemeter display at the top of the screen should be alternating between the ratemeter display and the word OVERLOAD at approximately 1 second intervals.
27. If this is not occuring adjust the OVERLOAD pot (**R7**) on the main board until the display alternates properly.
28. Adjust the high voltage to 1000 volts (**H1000**). The overload indicator should stop appearing.
29. Adjust the overlaod to 10.0 μA (**O100**). The OVERLAOD indicator should again begin to alternate with the ratemeter indicator.
30. Repeat steps 28 and 29 again with a voltage setting of 500 (**H500**) volts and an overload setting of 5 μA (**O50**).
31. When properly completed turn the overload alarm off (**OOFF**).

1. INITIAL INSTRUMENT CALIBRATION

1.2 Instrument Calibration (cont.)

Alarm Checkout

1. Connect the Model 2350-1 to the pulser.
2. Set the pulse frequency to 600k cpm.
3. Select the Alarm Display (**SVD3**).
4. Set the integrated dose alarm to 100k cpm (**P1E5**).

NOTE: If an alarm is indicated press the ACK/SCRL button to silence the audio.

5. Select the Main Display (**SVD0**) and zero the integrated dose (**SIZ**). The Integrated dose counter should start counting immediately and an alarm should be indicated when it reaches 100k cpm. After the alarm press the ACK/SCRL button to silence the audio.
6. Select the Alarm Display(**SVD3**) and set the scaler alarm to 60,000 counts (**K60000**).
7. Return to the Main Display (**SVD0**), set the scaler count time to 6 seconds (**F6**), and take a scaler count (**C**). When the scaler reaches 60,000 counts an alarm should again be indicated. Press the ACK/SCRL button again to silence the audio.
8. Adjust the pulse frequency of the pulser to less than 600k cpm.
9. Select the Alarm Display (**SVD3**) and set the ratemeter alarm to 600k cpm (**J6E5**).
10. Select the Main Display (**SVD0**) and readjust the pulse frequency to a setting of 600k cpm. The ratemeter alarm should be triggered. Press the ACK/SCRL button to silence the audio.
11. Verify that the ratemeter (**RAT**), scaler (**SCL**), and integrated dose (**DOS**) indicators are all alternating with the alarm (**ALM**) indicators at 1 second intervals.
12. Select the alarm display (**SVD3**)
13. Set all of the alarms to their default high settings (ratemeter, **J1E9**; scaler, **K1000000**; integrated dose, **P1E9**)
14. Select the Main Display (**SVD0**) and reset all of the alarm indicators (**X**).
15. Disconnect the instrument from the pulser and place it into the instrument can.

The electronics have now been calibrated and functionally checked. All remaining calibration procedures involve setting the programmable parameters of the instrument and are covered in the Model 2350-1 Data Logger Instruction Manual.

2. CALIBRATION ROUTINES

SOURCE PARAMETERS AND TYPICAL VALUES FOR MODEL 2350-1 CALIBRATIONS

To insure that the proper sized sources are used in calculating the calibration constant, and dead time of the Model 2350-1 and detectors the following calculation should be performed.

% Dead Time Loss = No. of source counts in 1 second X Dead Time (in seconds)

The following list provides some typical LO and HI cal points and dead times for various detectors:

TYPICAL DEAD TIME CALIBRATION, AND OVERLOAD POINTS

DETECTOR	LOW POINT	HIGH POINT	OVERLOAD POINT
44-2	500 µR/hr	15 mR/hr	100 mR/hr
44-6	20 mR/hr	400 mR/hr	1 R/hr
44-7	5 mR/hr	100 mR/hr	N/A
44-9	6 mR/hr	200 mR/hr	1 R/hr
44-38	20 mR/hr	400 mR/hr	1 R/hr
44-116	6 mR/hr	60 mR/hr	N/A

TYPICAL DEAD TIME AND CALIBRATION CONSTANT SETTINGS

DETECTOR	DEAD TIME	CALIBRATION CONSTANT
44-2	15 - 25 µsec.	$1.0e^{10}$ - $0.3e^{10}$
44-6	65 - 135 µsec.	$7.09e^{7}$ - $0.65e^{7}$
44-7	250 - 270 µsec.	$1.39e^{8}$ - $0.1e^{8}$
44-9	50 - 120 µsec.	$2.0e^{8}$ - $0.3e^{8}$
44-38	65 - 135 µsec.	$7.09e^{7}$ - $0.65e^{7}$
43-68 Alpha	15 - 25 µsec.	1
43-68 Beta	18 - 26 µsec.	1
43-37 Alpha	18 - 20 µsec.	1
43-37 Beta	19 - 25 µsec.	1

2. CALIBRATION ROUTINES

2.1 High Voltage Ramp Routine

The high voltage ramp routine is useful when a user needs to plateau a detector to determine the proper operating voltage of the detector. The following display will appear when performing the routine.

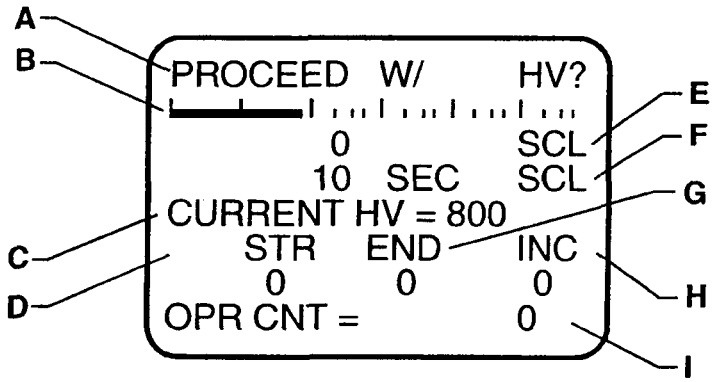

HIGH VOLTAGE RAMP ROUTINE DISPLAY

A. INFORMATION PROMPT: Prompts the user for the parameters required for the ramping routine. When the routine is first started the prompt will ask if the user wants to proceed with the current parameters. If answered YES the instrument will then prompt the user to begin the routine by executing the scaler count command. If answered NO then the following information prompts will appear immediately after the one before is answered.

Starting HV ?
Ending HV?
HV Increment?

The message DUMPING HEADER will then appear momentarily followed by the command "Ent C to start".

B. RATEMETER BARGRAPH DISPLAY: A logarithmic display of the ratemeter reading in cps.

C. HV IDENTIFIER: Identifies the current HV setting.

D. STR: Identifies the starting voltage of the HV ramping routine.

E. SCALER COUNT: Shows the scaler reading in progress.

F. SCALERTIMER: Shows the count time for the scaler. When a count is in progress the timer will show the time remaining in the count.

G. END: Identifies the ending HV setting for the ramping routine.

H. INC: Identifies the increment the voltage will be increased by in each step of the routine.

I. OPR CNT: Identifies the count at the beginning knee of the plateau or the recommended operating voltage.

2. CALIBRATION ROUTINES

The following example demonstrates how to run a plateau on a Model 44-2 Gamma Scintillator.

KEYSTROKES	RESPONSE
Note: Before performing the SHR(x) command, certain parameters must be set. The parameters that need to be set include the threshold, window position, and count time.	
SHR(x) ENTER Where (x) = the number 0 or 1. 0 = Disables data dump to the serial port. 1 = Enables data dump to the serial port.	The Model 2350 display will show the detector display with the current set of detector parameters. There will be no prompt but you will need to select a set of parameters to use in the routine. If the current parameters are correct press "Y ENTER", otherwise select the set of detector parameters that you want to use and then press "Y ENTER". The instrument will proceed with the routine by displaying the screen shown on the opposite page.
N ENTER	This answers the prompt "PROCEED W/ HV" allowing the user to change the parameters of the routine.
500 ENTER	This set the beginning high voltage at 500 volts.
1000 ENTER	This sets the ending high voltage at 1000 volts.
25 ENTER	This sets the HV increment to 25 volts. (This increment is the amount that the high voltage setting will change between each step of the ramping routine.)
C ENTER	This activates the routine by starting the scaler counting.

"SHR0" will run the plateau routine, determine the operating votage, but will not dump data to the RS-232 port. "SHR1" will run the plateau routine, determine the operating voltage, and will dump the voltage setting and scaler count at each increment of the plateau routine.

When the routine is complete the following prompt will appear:
"SAVE? HV = XXX"

"Y ENTER" will save the voltage as the operating voltage of the detector and the instrument will return to the screen that was active prior to the exucution of the routine. "N ENTER" will return to the screen that was active prior to the exucution of the routine without saving the voltage.

2. CALIBRATION ROUTINES

2.2 Calibration Constant and Dead Time Calibration with Background Subtract

This routine will use a two point (low-hi) method to calculate the calibration constant and dead time of the detector. The following display will appear when performing the routine.

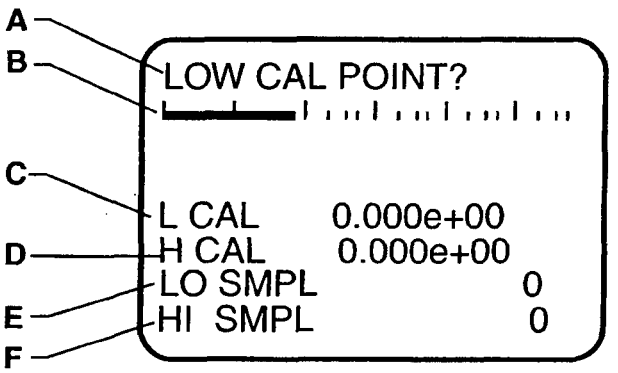

CALIBRATION CONSTANT/DEAD TIME ROUTINE DISPLAY

A. INFORMATION PROMPT: Prompts the user for the parameters required for the routine. When the routine is first started the prompt will prompt the user low calibration point. Once entered it will prompt for the following parameters in order.

HI CAL POINT
TAKE BACKGROUND
TAKE LOW SAMPLE
TAKE HI SAMPLE
SAVE NUMBERS?

B. RATEMETER BARGRAPH DISPLAY: A logarithmic display of the ratemeter reading in cps.

C. L CAL: Identifies the low calibration point that will be used in the routine.

D. H CAL: Identifies the high calibration point that will be used in the routine.

E. LO SMPL: Shows the reading obtained from the low sample source.

F. HI SMPL: Shows the reading obtained from the high sample source.

NOTE: Line 1 will indicate the ratemeter reading when a sample is being taken, and lines 3 and 4 will show the scaler taking a count. When the routine is complete Line 3 will display the calculated calibration constant, and line 4 will show the calculated dead time constant. These numbers will be saved into the active detector setup if the user answers yes to the prompt to save the numbers.

2. CALIBRATION ROUTINES

The following example will calculate the cal constant and dead time of a Model 44-2 Gamma Scintillator in R/hr.

KEYSTROKES	RESPONSE
SKB ENTER	The Model 2350-1 will show the calibration constant/dead time routine with background subtract control display with a prompt to set the low cal point.
5e-4 ENTER	This will set the lower calibration point at 500 μR/hr, then a prompt will appear for the hi cal point.
15e-3 ENTER	This will set the high calibration point at 15 mR/hr, then a prompt will appear to take a background sample.
C ENTER	This will initiate the scaler to take a background reading, then a prompt will appear to take the low sample count. Place a 1 μCi ^{137}Cs check source on the end of the detector.
C ENTER	This will initiate the scaler to take a count with the low sample source, then a prompt will appear for the hi sample count. Place a 5 μCi ^{137}Cs check source on the end of the detector.
C ENTER	This will initiate the scaler to take the hi sample reading.

NOTE: The SSK command initiates the same routine as stated above except that the background count is not taken or considered when determining the calibration constant and dead time of the system.

ADDITIONAL PARAMETERS

1. The background count should be less than 2% of the low sample count.
2. The low sample count should have at least 15,000 counts.
3. The high sample should be at least 100 times the low sample and produce between 30 - 60% dead time loss.

2. CALIBRATION ROUTINES

2.3 Single Point Calibration Constant Routine with Background Subtract

This routine will use a single point method to calculate the calibration constant of the detector. The following display will appear when performing the routine.

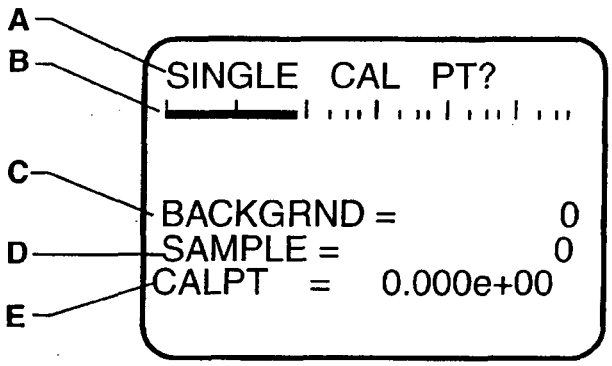

CALIBRATION CONSTANT/DEAD TIME ROUTINE DISPLAY

A. INFORMATION PROMPT: Prompts the user for the parameters required for the routine. When the routine is first started the prompt will prompt the user single calibration point. Once entered it will prompt for the following parameters in order.

TAKE BACKGROUND
TAKE SAMPLE
SAVE CAL CNST?

B. RATEMETER BARGRAPH DISPLAY: A logarithmic display of the ratemeter reading in cps.

C. BACKGRND: Identifies the background reading obtained during the routine.

D. SAMPLE: Identifies the sample count taken during the routine.

E. CALPT: Identifies the reference calibration point set for the routine.

NOTE: Line 1 will indicate the ratemeter reading when a sample is being taken, and lines 3 and 4 will show the scaler taking a count. When the routine is complete Line 8 will display the calculated calibration constant. This number will be saved into the active detector setup if the user answers YES to the prompt to save the number.

2. CALIBRATION ROUTINES

The following example will calculate the cal constant of a Model 44-2 Gamma Scintillator in R/hr.

KEYSTROKES	RESPONSE
SSB ENTER	The Model 2350-1 will show the single point calibration constant routine with background subtract control display with a prompt to set the single cal point.
5e-4 ENTER	This will set the single calibration point at 500 μR/hr, then a prompt will appear to take a background reading.
C ENTER	This will initiate the scaler to take a background count, then a prompt will appear for the sample count. Place the detector in a 500 μR/hr field.
C ENTER	This will initiate the scaler to take the single sample reading.

NOTE: The SSS command initiates the same routine as stated above except that the background count is not taken or considered when determining the calibration constant.

2. CALIBRATION ROUTINES

2.4 Two Source Dead Time Calibration Routine with Background Subtract

This routine will use a single point method to calculate the calibration constant of the detector. The following display will appear when performing the routine.

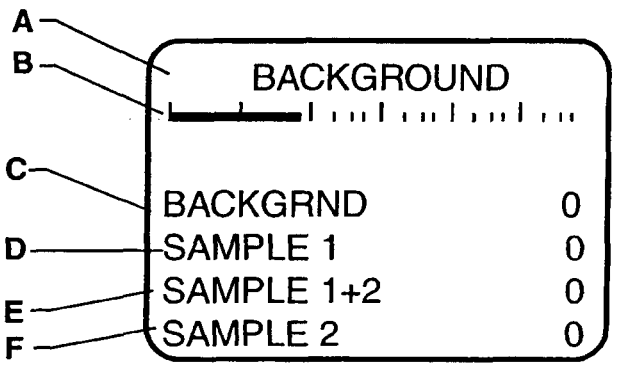

CALIBRATION CONSTANT/DEAD TIME ROUTINE DISPLAY

A. INFORMATION PROMPT: Prompts the user for the parameters required for the routine. When the routine is first started the prompt will appear for the background count. Once entered it will prompt for the following parameters in order.

SAMPLE 1
SAMPLE 1+2
SAMPLE 2
SAVE DEAD TIME?

B. RATEMETER BARGRAPH DISPLAY: A logarithmic display of the ratemeter reading in cps.

C. BACKGRND: Identifies the background count taken during the routine.

D. SAMPLE 1: Identifies the sample count taken with source 1 during the routine.

E. SAMPLE 1 +2: Identifies the sample count taken with sources 1 & 2 during the routine.

F. SAMPLE 2: Identifies the sample count taken with source 2 during the routine.

NOTE: Lines 3 will show a timer and line 4 will show the word COUNTING when a count is in progress. When the routine is complete Line 3 will display the calculated dead time for the detector. This number will be saved into the active detector setup if the user answers YES to the prompt to save the number.

2. CALIBRATION ROUTINES

The following example will calculate the dead time of a Model 44-2 Gamma Scintillator in R/hr.

KEYSTROKES	RESPONSE
SSD ENTER	The Model 2350-1 will show the dead time calibration routine with background subtract control display with a prompt to take a background reading.
C ENTER	This will initiate a count to get a background sample, then a prompt will appear to take a reading from sample 1.
C ENTER	This will initiate count for sample 1, then a prompt will appear for a count with samples 1 & 2.
C ENTER	This will initiate a count of samples 1 & 2 together, then a prompt will appear for a count with sample 2 only.
C ENTER	This will initiate a count of sample 2 only.

ADDITIONAL PARAMETERS

1. The sources used for this test should be approximately the same size and each should provide a minimum of 25,000 cpm.
2. When combined the sources must provide a between 25 - 60% dead time loss.

3. THEORY OF OPERATION

3.1 AMPLIFIER/POWER SUPPLY BOARD #5371-002

3.1.1 INPUT

Negative going pulses are coupled from the detector through C9 to emitter follower Q1. CR6 is a voltage reference which provides a bias voltage of approximately +3.3 Vdc to Q1 via R45. R9 protects Q1 from input inadvertent shorts/ transients. R40 couples the detector to the high voltage supply (HV).

3.1.2 AMPLIFIER

U3 is a self-biased amplifier which provides gain in proportion to R12 divided by the series combination of R11 and R10. R10 is adjusted to provide a pulse height in proportion to a given threshold setting at comparator U4 (typically adjusted to trigger with a detector input pulse of 10 millivolts at a threshold setting of 100). Transistor (pins 4, 5, and 6 of U3) provide amplification and pulse polarity inversion. Transistor pins 10 through 15 are coupled as a constant current source to pin 6 of U3. The output self-biases to 2 Vbe — approximately 1.4 Vdc at pin 7 of U3. This provides just enough bias current through pin 6 to conduct all of the current from the constant current source. Positive pulses from pin 7 are coupled to the Window and Threshold comparators, U4.

3.1.3 WINDOW/THRESHOLD

Threshold (THR) comparator, pins 5, 6, and 7 of U4, provides the lower pulse height discrimination. Pulses are AC coupled from amplifier U3 via C23 to pin 6 of U4. THR reference voltage data from the microprocessor board (µP) is processed by digital to analog convertor (DAC) U6 and coupled to pin 5 of U4 via opamp U5. R54 and C13 provide additional filtering of the reference voltage. THR reference Vdc is approx. +122 millivolts (mV) with the THR set at 100 on display — 1.222 Vdc at a THR setting of 1000. As the pulse height at pin 6 of U4 increases above the reference voltage at pin 5, pin 7 — normally high (approx. +5 Vdc) goes low for the pulse duration.

Window (WIN) comparator, pins 1, 2, and 3 of U4 provide the upper pulse height discrimination. Pulses are coupled from amplifier U3 to pin 2 of U4. WIN reference voltage data from the µP is processed by DAC U6 and coupled to pin 3 of U4. Q2 applies approx. +5 Vdc to the WIN reference to disable the WIN comparator when the WIN OFF signal is applied to the base of Q2. The WIN reference voltage rides on top of the THR reference — i.e., with a THR and WIN setting of 100, the WIN reference at pin 3 of U4 will equal approx. +122 mV referenced above the THR at pin 5 or approx. +244 mV referenced to chassis ground. If the THR is increased to 200 and the WIN still remains at 100 the WIN reference will still equal approx. +122 mV referenced to the threshold but will increase to approx. +366 mV when referenced to ground (THR = 244 mV + 122 mV WIN = 366 mV). As the pulse amplitude increases above the WIN reference voltage, pin 1 of U4 goes low for the pulse duration.

3.1.4 WINDOW/THRESHOLD LOGIC CIRCUIT

Negative pulses from the THR comparator are coupled to univibrator U9. Negative, pulses (approx. 5 volt) are present at univibrator output pin 7 of U9 (PULSE') as long as pins 13 and 3 remain high. When a WIN pulse is present at pins 13 and 3 the Reset function is enabled which disables the PULSE' output locking pin 7 high. Pulses are connected from pin 7 to the µP on the Central Processor Board for count processing. Pin 7 is tied back to pin 13 via CR1 to provide a time delay (approx. 8 to 10 µs) for the µP clock cycle to complete before the next pulse can be recognized by the micro-processor.

3.1.5 DIGITAL TO ANALOG CONVERTORS

U6 and U7 are digital to analog convertors (DAC) which convert the digital data from the µP to analog signals to control the THR, WIN, High Voltage Reference (HV REF), and Overload Reference (OVR REF) variables. Data via BUS0-BUS3 and A0-A2 is loaded into the DAC latches for U6 and U7 by strobing CE3' and CE4' (Chip Select). CE5' (Up Date) is then strobed to transfer the data stored in the latches to the DAC outputs.

3.1.6 HIGH VOLTAGE SUPPLY AND DETECTOR OVERLOAD

Detector High Voltage (HV) is developed by blocking oscillator Q3, T1, C29 and rectified by voltage multiplier CR3-CR5, CR14, CR15, C5, C32, C37, and C38. Q4, CR13, and R41 provide a regulated voltage of approx. 4.4 Vdc (battery voltage must be +4.4 Vdc) to the emitter of Q3. HV increases as current through Q5 increases with maximum output voltage with Q5 saturated.

HV is coupled back through R5, through voltage follower U1, to pin 6 of U2 to complete the regulation loop. Resistors R52 and R6 complete the HV divider network to ground. HV regulation is produced by opamp comparator pins 5, 6, and 7 of U2. During stable operation the voltage at pin 6 will equal pin 5. If HV REF is increased, pin 7 of U2 will increase increasing conduction of Q5 until the voltage at pin 6 equals pin 5 of U2 via HV divider network, R5, R52, and R6. R52 is adjusted to calibrate the HV output to the HV REF signal supplied to pin 5 of U5 by the DAC — HV REF is set at approx. 1500 mV by entering the "H1500" command into the Model 2350-1, the HV CAL is adjusted for 1500 Vdc at the detector connector. C1-C3, C8-C7, C19, and C27 provide additional filtering of the HV output.

Detector Overload is achieved by measuring the voltage differential across R4. As current is increased into the detector, a voltage drop is produced across R4. The HV on either side of R4 is converted to a low voltage by resistor divider networks R5, R52, R6, and R44, R7, and R43. The voltage differential is coupled to differential opamp, pins 12-14 of U1, via opamp buffers. The differential output is coupled to opamp comparator, pins 8- 10 of U1. OVR REF is provided by the µP via the DAC — OVERLOAD' is coupled back to the µP. R7, CURRENT CAL, calibrates the detector current drain to the OVR REF input — i.e., a 10µA load is connected to the detector output; the overload is set to "100" by entering the "O100" command (approx. 610mV at OVR REF), R7, CURRENT CAL, is then adjusted until pin 8 or U1 just starts to trigger low.

3.1.7 LOW VOLTAGE SUPPLY

Supply voltages of +5 and -10 Vdc are supplied by U8, T2, and supporting components. U8 is a switching regulator with an on-board comparator providing regulation. An internal voltage reference of 1.0 Vdc maintains the inverting and non-inverting comparators at 1.0V via the feedback loop. Oscillator frequency, set by C36, is approx. 100 kHz at pin 5 of U5. CR11 and C26 provide rectification and filtering for the +5V output. CR12 and C25 provide rectification and filtering for the -10V output.

U11 is a -2.5 Vdc voltage reference for the DAC's — U6 and U7. C8 located on the Backplane board maintains the battery voltage charge during inadvertent battery disconnection (mechanical shock).

3.1.8 LCD VIEWING ANGLE SUPPLY

U2 is configured as a differential opamp which controls the backplane voltage to adjust the viewing angle for the LCD graphics display. Output voltage, pin 1 of U2 is adjustable from 0 to -10 Vdc by varying R50 (VIEWING ANGLE). LCD backplane variance due to temperature is compensated by CR10.

3. THEORY OF OPERATION

3.2 CENTRAL PROCESSOR BOARD #5371-068

3.2.1 MICROPROCESSOR (µP)

U124, Intel 80C51FA, is the Model 2350-1 central processor. The µP clock frequency is crystal controlled by Y159 and related components at 6.144 MHZ. C172 resets the µP at power-up to initiate the start of the program routine. The main program routine is stored in EPROM, U122. User parameters and logged data is stored in the 8k X 8 RAM, U123. (replaced with 64k X 8 RAM located on the Memory Expander board)

Address and data information are multiplexed by latch U121 from the µP to the two memory chips. The low address bits A0-A7 are multiplexed with the data bus, BUS0-BUS7, out of the µP. U121 latches the address data AO-A7 on lines BUS0-BUS7 during the first part of the external memory cycle when the ALE input is strobed.

The HD175 ACCESS shunt configures the µP parameter access mode and password. When pins 1 and 2 are shunted (default) the access parameters is determined by the settings preset in the EPROM and the password entered in RAM. If shunt is placed between pins 2 and 3 the password is set to "0" and the access level is set to "3".

The ACKNOWLEDGE' input is pulled low when the front panel ACKNLDGE pushbutton switch is depressed silencing the audible alarm(s). The OVERLOAD' signal from the AMP/PS board instructs the µP to initiate an OVERLOAD condition. WIN OFF' is an output signal from the µP to the AMP/PS board which disables the Window feature.

The TONE' input comes from the I/O processor which toggles the TONE'/ALARM line low when the external bar code wand registers bar code information. The TONE' and ALARM' (µP output signal from pin 5 of U124) signals initiate an independent audible tone by changing the CV (control voltage) input on the ICM7556 timer, U118.

The READY, CLEAR SEND, RECEIVE, and XMIT data lines communicate the RS-232 and bar code reader wand information from/to the I/O processor to/from the central processor. The RESET output at pin 13 of U124 is coupled to the I/O board to reset the I/O processor. Q174 inverts the RESET signal (RESET') providing a reset line for the LCD graphics display. The PULSE' input supplies the pulses from the AMP/PS board to be counted and converted into data by the µP.

3.2.2 BATTERY VOLTAGE VFC

Un-switched (connected directly to batteries) battery voltage — +BATUNS — is divided by resistor divider network R148 and R149 and connected to voltage to frequency convertor (VFC), U125. VFC OUT is connected to a counter inside the µP which counts the frequency for a preset time converting to a number displayed on the LCD representing the battery voltage. R130, BAT CAL, adjusts the VFC frequency output to calibrate the LCD BAT reading to the actual battery voltage.

NOTE: Disregard sections 3.2.3 and 3.2.4 for the Model 2350-1

3.2.3 RECORDER DRIVE CIRCUIT

The RCDR output from the µP is coupled to MOSFET transistor Q126. The µP uses pulse-width modulation for the recorder signal. The pulse-modulated signal is integrated by R144 and C100. Pins 5, 6, and 7 of U126 "buffers" the integrated voltage from R131. R131 provides calibration of the recorder output voltage. Pins 1, 2, and 3 of U126 are configured as an opamp voltage follower providing recorder drive.

3.2.4 ADDRESS DECODER/VOLTAGE BACKUP

U120 is address decoder which generates the chip enable signals — CEO-CE7 — by monitoring address lines A13-A15. U120 also provides battery backup, +5VBACK, to the Clock chip U119 and the RAM U123. This enables the user to change the instrument batteries without losing RAM memory. +BATUNSR supplies battery voltage to CR112 voltage reference to limit the voltage at 5.1 Vdc. The 5.1 Vdc is coupled to a 0.1

farad capacitor through CR113. CR113 prevents C129 from discharging through the +BATUNSR line when the batteries are removed.

3.2.5 CLOCK CHIP

U119 provides the time and date information used in conjunction with the logged data. U119 is crystal controlled by Y158 and supporting components C102 and C103 at 32.786 kHz. The 10 Hz output at pin 13 of U119, provides the timing frequency to the µP.

3.2.6 AUDIO CIRCUIT

Pulses are coupled from the AMP/PS board to U128 — RDD 104 decade divider chip. AUDIO DIVIDE (front panel) by "1" switch position jumpers the PULSE' input directly to the CLICK' input to the timers. Divide by "10" and "100" switch positions connect the DIV OUT of U128 to the CLICK' input using U128 for pulse division. U118, a dual package 7555 timer, provides audio oscillation. Pulses (CLICK') are coupled to the first timer, pins 1-6 of U118, via C97. This timer is configured as a monostable multivibrator (one-shot) producing a fixed pulse-width for each input pulse at pin 6 of U118. Pulse-width is set by R161 and C95. CR114 limits pulse input to pin 6 of U118 to 5.6 volts; R134 is a pull-up resistor for the AC coupled pulse. The second half of U118 is configured as a astable (free-running) multivibrator which produces the audible tone — frequency is set by R133 and C96.

T157 provides amplification of the audio signal driving the unimorph speaker. Audio volume is varied by adjusting the voltage on top of the primary winding of T157 via the front panel volume control. When an ALARM' is initiated maximum voltage applied by saturating Q154.

3.3 I/O INTERFACE BOARD #5371-063

3.3.1 MICROPROCESSOR (µP)

U15, Intel 80C51FA, communicates and processes information bi-directionally from/to the RS-232 interface (U13) to/from the central processor via the serial interface lines XMIT, READY, RECEIVE, and CLEAR SEND. U15 also decodes information from the bar code reader (WAND) and sends information to central processor. The µP clock frequency is crystal controlled by Y159 and related components at 6.144 MHZ.

U14, EPROM, stores the program for the I/O µP. U14 incorporates on-board latches to separate the multiplexed address and data buss lines.

CR26-CR28 provide "clipping" of transients which may be produced at the SERIAL I/O port.

3.3.2 RS-232 INTERFACE

U13, MAX232, is a +5 Vdc powered RS-232 driver/ receiver used to interface the Model 2350-1 to a computer or keypad terminal. U13 incorporates on-board voltage multipliers which generate the +10 and -10 volts required for RS-232 communication.

3.3.3 BACKLIGHT DRIVE

The LCD backlight is illuminated by appling power to +EL POWER when front panel BACKLIGHT switch is ON. With battery voltage applied to +EL POWER, blocking oscillator — Q23, T1 and supporting components begin oscillating. The signal is amplified by T1 to provide a 70VAC signal to drive the LCD backlight. R30, a 10 ohm resistor, limits the power-up surge to the oscillator circuit.

3. THEORY OF OPERATION

3.4 64k MEMORY EXPANDER BOARD #5371-054

NOTE: When the MEMORY EXPANSION board is added, U120 (DS1211) and U123 (CDM6264) on the CENTRAL PROCESSOR board must be removed. The red entries in the CENTRAL PROCESSOR theory of operation should be removed/or inserted for the M2350-1.

U119 is a 128k RAM (only 64k is used) used to store user parameters and logged data. U119 is selected by the central µP by applying a logic "high" to the RAM input, Pin 30 of U119. The Recorder circuit is disabled on the Central Processor board and the RCDR output on the central µP is used to enable the Memory Expansion board RAM.

U117 is address decoder which generates the chip enable signals — CE1-CE7, E1 — for the DAC's on the AMP/PS board and the Clock chip on the Central µP board by monitoring address lines A12-A14 from the central µP.

U115 provides battery backup, +5VBACK, to the Clock chip (U119) on the Central µP board and the RAM. This enables the user to change the instrument batteries without losing the RAM memory. U115 also provides a RESET signal which goes low when the +5V supply to pin 2 of U115 drops below a preset threshold (4.5-4.75 volts). This opens U116 analog switches disabling the RAM and CLOCK' signals from the data bus to save the parameter and logging memory.

4. PARTS LIST, COMPONENT LAYOUTS, AND SCHEMATICS

AMPLIFIER / POWER SUPPLY BOARD

Ref. No.	Description	Part No.
CAPACITORS		
C1-C3	0.0056μF, 3kV	04-5522
C4	0.1 μF	04-5521
C5	0.0015 μF, 3kV	04-5518
C6-C8	0.0056 μF, 3kV	04-5522
C9	100 pF, 3kV	04-5532
C10	10 μF	04-5592
C11-C12	100 pF	04-5527
C13	0.01 μF	04-5523
C14	47 pF	04-5533
C15	100 μF	04-5576
C16	220 pF	04-5530
C17	100 pF	04-5527
C18-C19	0.0056 μF, 3kV	04-5522
C20-C21	33 pF	04-5616
C22	0.01 μF	04-5523
C23	0.1 μF	04-5521
C24	0.0056 μF, 3kV	04-5522
C25	22 μF	04-5579
C26	220 μF	04-5639
C27	0.0056 μF, 3kV	04-5522
C28	100 pF, 3kV	04-5532
C29	0.01 μF	04-5523
C30	100 μF	04-5576
C31	100 pF	04-5527
C32	0.0015 μF, 3kV	04-5518
C33	33 pF	04-5616
C34	1 μF	04-5575
C35-C36	0.001 μF	04-5519
C37-C38	0.0015 μF, 3Kv	04-5518
C39	10 μF	04-5592
C40	0.1 μF	04-5521
C41	33 pF	04-5616
C42	0.01 μF	04-5523
DIODES		
CR1-CR2	1N4148	07-6272
CR3-CR5	MR250-2	07-6266
CR6	1N5226	07-6260
CR7	1N5819	07-6306
CR8-CR10	1N4148	07-6272
CR11-CR12	1N5819	07-6306
CR13	1N4148	07-6272

4. PARTS LIST, COMPONENT LAYOUTS, AND SCHEMATICS

Ref. No.	Description	Part No.
DIODES		
CR14-CR15	MR250-2	07-6266
CR16-CR18	1N4148	07-6272
TRANSISTORS		
Q1	2N3904	05-5755
Q2	MPS6534	05-5763
Q3	MPS-U51	05-5765
Q4	MPS-U01	05-5778
Q5	2N3904	05-5755
RESISTORS		
R1	10kohm, 333MW	12-7748
R2	47 ohm, 333MW	12-7756
R3	56 kohm, 333MW	12-7789
R4	4.7 Mohm	10-7030
R5	1 Gohm	12-7686
R6	470 kohm, 333MW	12-7757
R7	1 Mohm, pot	09-6828
R8	100 kohm, 333MW	12-7747
R9	10 kohm, 333MW	12-7748
R10	100 kohm, pot	09-6823
R11	1 kohm, 333MW	12-7750
R12	470 kohm, 333MW	12-7757
R13-R14	10 kohm, 333MW	12-7748
R15	1 kohm, 333MW	12-7750
R16	4.7 kohm, 333MW	12-7755
R17-R19	10 kohm, 333MW	12-7748
R21	0.1 ohm, 3W	12-7647
R22	80.6 kohm, 333MW	12-7762
R23	1 Mohm, 333MW	12-7763
R24	10 Mohm, 333MW	12-7749
R25	10 kohm, 333MW	12-7748
R26	80.6 kohm, 333MW	12-7762
R27	62 kohm, 333MW	12-7790
R28	1 Mohm, 333MW	12-7763
R29	33.2 kohm, 333MW	12-7793
R30	47 kohm, 333MW	12-7758
R31	100 ohm, 333MW	12-7746
R32	221 kohm, 333MW	12-7792
R33-R36	10 kohm, 333MW	12-7748
R37	820 ohm, 333MW	12-7791
R38	10 kohm, 333MW	12-7764

4. PARTS LIST, COMPONENT LAYOUTS, AND SCHEMATICS

Ref. No.	Description	Part No.
RESISTORS		
R39-R40	1 Mohm	10-7028
R41	100 kohm, 333MW	12-7747
R42	3 kohm, 333MW	12-7768
R43	470 kohm, 333MW	12-7757
R44	1 Gohm	12-7686
R45	100 kohm, 333MW	12-7747
R46	10 kohm, 333MW	12-7748
R47	33.2 kohm, 333MW	12-7793
R48	1 Mohm, 333MW	12-7763
R49	12 kohm, 333MW	12-7787
R50	1 kohm, pot	09-6831
R51	330 ohm, 333MW	12-7788
R52	1 Mohm, pot	09-6828
R53	22 kohm, 333MW	12-7754
R54	10 kohm, 333MW	12-7748
R55	1 kohm, 333MW	12-7750
R56	1 Mohm, 333MW	12-7763
R57	80.6 kohm, 333MW	12-7762
R58	1 Mohm, 333MW	12-7751
R59	10 kohm, 333MW	12-7748
RESISTOR NETWORK		
RN1	5.6 kohm	12-7696
RN20	220 kohm	12-7578
TRANSFORMERS		
T1	M2350-1 HVPS	4275-037
T2	M2350-1 LVPS	4275-089
INTEGRATED CIRCUITS		
U1	LT1079	06-6252
U2	LT1078	06-6251
U3	CA3096	06-6023
U4	TLC372	06-6265
U5	LT1078	06-6251
U6-U7	AD7549	06-6253
U8	LM2578	06-6223
U9	CD4098	06-6066
U10	LT1078	06-6251
U11	LM385Z	05-5791

4. PARTS LIST, COMPONENT LAYOUTS, AND SCHEMATICS

CENTRAL PROCESSOR BOARD

Ref. No.	Description	Part No.
CAPACITORS		
C95	0.047 μF	04-5565
C96	0.001 μF	14-5519
C97	47 pF	04-5533
C98	0.01 μF	04-5523
C99-C100	0.1 μF	04-5521
C101	27 pF	04-5614
C102-C103	22 pF	04-5552
C104	27 pF	04-5614
C109	10 μF	04-5592
C110	100 μF	04-5576
C111	1 μF	04-5575
C129	0.1 F	04-5633
C172	10 μF	04-5592
C177	0.1 μF 100V	04-5521
DIODES		
CR112	1N5231	07-6261
CR113-CR115	1N4148	07-6272
CR162	1N4148	07-6272
HEADER		
HD175	3 PIN SIP	n/a
TRANSISTORS		
Q153	2N3904	05-5755
Q154	MPS6534	05-5763
Q155	2N3904	05-5755
Q168,Q174	2N7000	05-5820
RESISTORS		
R130	10 kohm, pot	09-6822
R131	100 kohm, pot	09-6823
R132	2.2 kohm	10-7012
R133	470 kohm	10-7026
R134	220 kohm	10-7066
R135	5.6 kohm	10-7042
R137-R138	10 kohm	10-7016
R139	33 kohm	10-7019
R140	10 kohm	12-7540
R141-R142	100 kohm	12-7557
R143	7.15 kohm	12-7620

4. PARTS LIST, COMPONENT LAYOUTS, AND SCHEMATICS

Ref. No.	Description	Part No.
RESISTORS		
R144	1 Mohm	10-7028
R148	35.7 kohm	12-7640
R149	8.66 kohm	12-7623
R160	220 kohm	10-7066
R161	150 kohm	10-7024
R164	1 Mohm	10-7028
R166-R167	10 kohm	12-7540
R170	1 Mohm	10-7028
R176	220 kohm	10-7066
RESISTOR NETWORKS		
RN151	22 kohm	12-7566
TRANSFORMERS		
T157	M2221, 300-9	4275-074
INTEGRATED CIRCUITS		
U118	ICM7556	06-6244
U119	MM58274	06-6254
U120	CPL-200-T2-T	06-6441
U121	CD74HC573	06-6093
U122	27C512	06-6264
U123	CPL-140-T2-T	06-6439
U124	80C51FA	06-6236
U125	LM331	06-6156
U126	TLC27M71P	06-6248
U128	RDD104	06-6060
CRYSTALS		
Y158	32 kHz XTAL	01-5219
Y159	6.144 MHz XTAL	01-5212

4. PARTS LIST, COMPONENT LAYOUTS, AND SCHEMATICS

64k MEMORY EXPANDER BOARD

Ref. No.	Description	Part No.
RESISTORS		
R001	22.1 kohm	12-7843
R114	221 kohm	12-7845
INTEGRATED CIRCUITS		
U115	MAX703ESA	06-6381
U116	CD74HC4066M	06-6323
U117	CD74HC138M	06-6339
U119	CXK581000M	06-6385

4. PARTS LIST, COMPONENT LAYOUTS, AND SCHEMATICS

I/O INTERFACE BOARD

Ref. No.	Description	Part No.
CAPACITORS		
C3-C4	27 pF	04-5614
C5	0.047 µF	04-5565
C6	100 µF	04-5576
C8-C11	10 µF	04-5592
C12	4.7 µF	04-5578
C37-C39	220 µF	04-5639
RESISTORS		
R16	33 ohm	10-7001
R19	8.2 kohm	10-7015
R20-R21	3.3 kohm	10-7013
R30	10 ohm	10-7046
R40	4.7 ohm	10-7095
RESISTOR NETWORKS		
RN33	10 kohm	12-7777
DIODES		
CR26-CR28	1N5231	07-6261
TRANSISTORS		
Q23	2N3904	05-5755
TRANSFORMERS		
T1	M2350-1 EL	4275-090
INTEGRATED CIRCUITS		
U13	MAX232	06-6188
U36	87C51FA	06-6405
CRYSTALS		
Y25	6.144 MHz MICRO XTAL	01-5212

4. PARTS LIST, COMPONENT LAYOUTS, AND SCHEMATICS

BACKPLANE BOARD

Ref. No.	Description	Part No.
RESISTORS		
R6	1 kohm	10-7009
DIODES		
CR5	1N4148	07-6272
CR7	1N5819	07-6306
CONNECTORS		
J1-J2	125X44-CBNEARS EZA22DRSN	13-8181

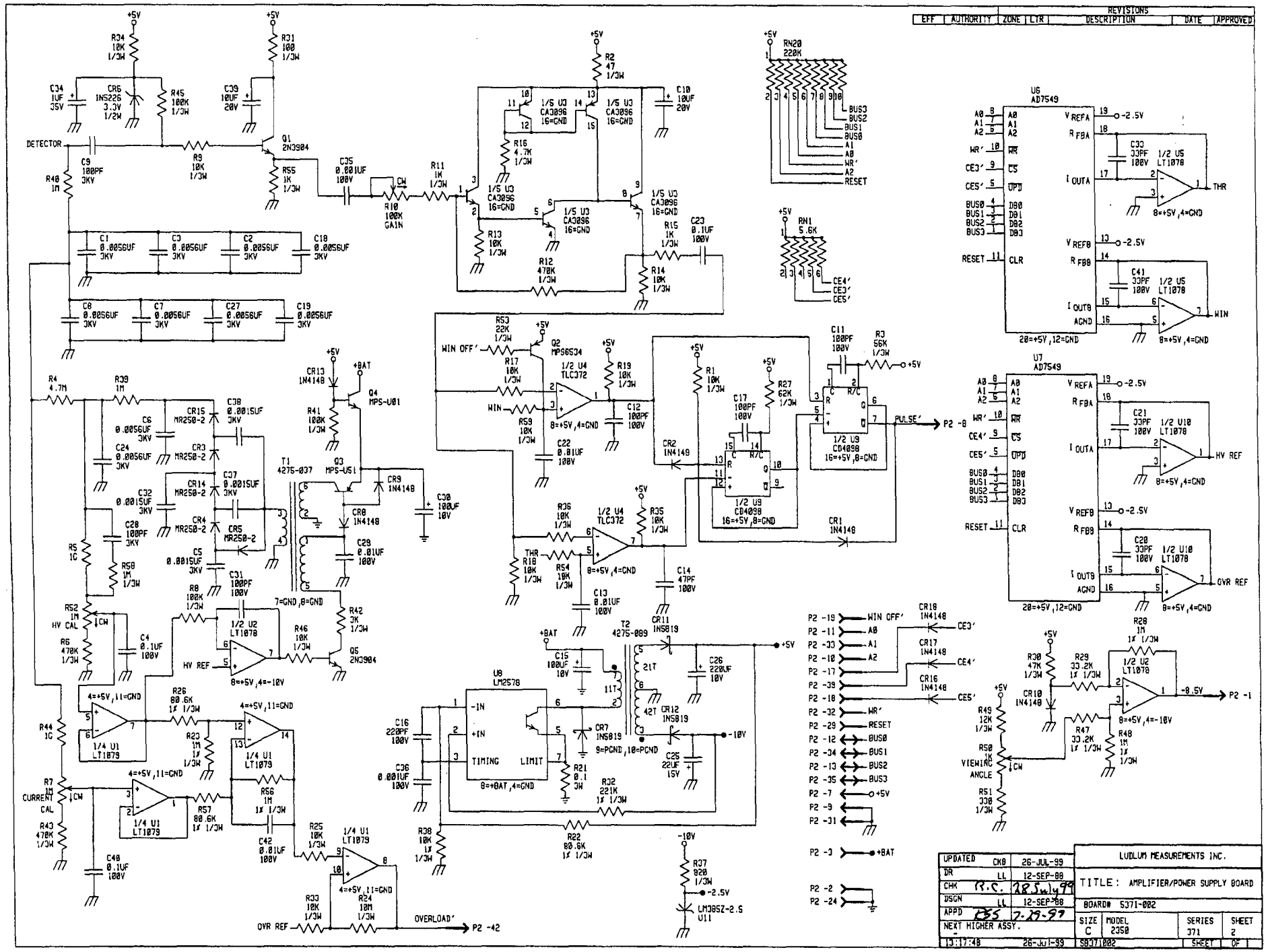
REVISIONS
EFF | AUTHORITY | ZONE | LTR | DESCRIPTION | DATE | APPROVED
DETECTOR
U6 AD7549
U7 AD7549
U8 LM2578
Q1 2N3904
Q2 MPS6534
Q3 MPS-U51
Q4 MPS-U01
Q5 2N3904
T1 4275-037
T2 4275-089
PULSE'
WIN OFF'
WIN
THR
HV REF
OVR REF
OVERLOAD'
VIEWING ANGLE
CURRENT CAL
HV CAL
GAIN
LUDLUM MEASUREMENTS INC.
TITLE: AMPLIFIER/POWER SUPPLY BOARD
BOARD# 5371-002
UPDATED CKD 26-JUL-99
DR LL 12-SEP-88
CHK R.C. 28 Jul 99
DSGN LL 12-SEP-88
APPD BS 7-29-99
NEXT HIGHER ASSY.
13:17:48 26-JUL-99
SIZE C
MODEL 2350
SERIES 371
SHEET 2
5371002
SHEET 1 OF 1

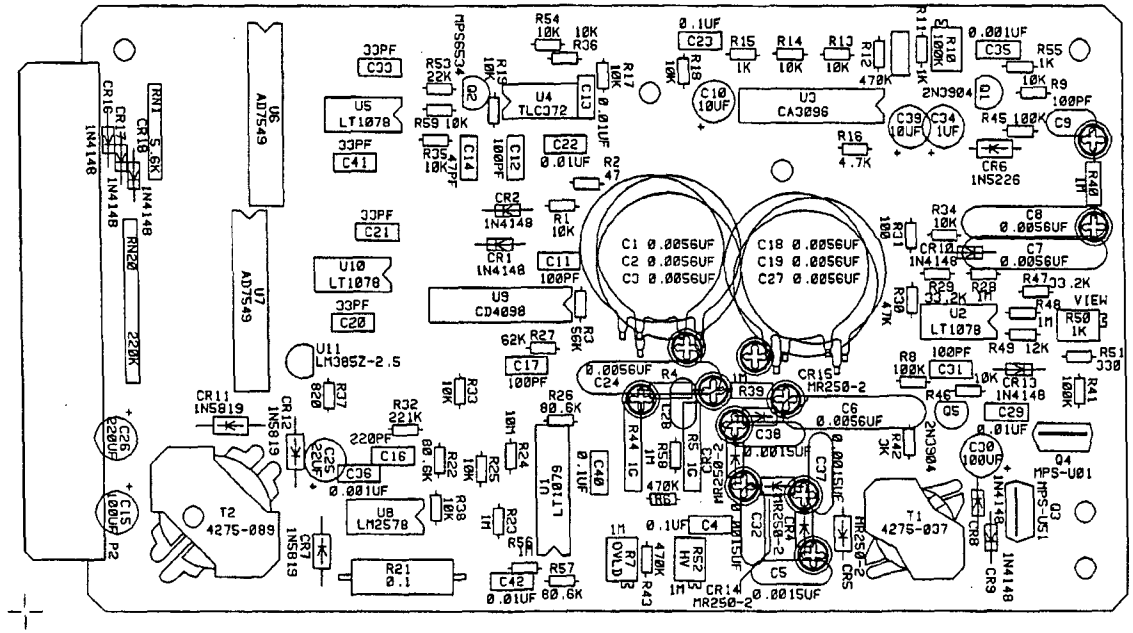

LUDLUM MEASUREMENTS INC. SWEETWATER, TX.					
DR	CKB 26-JUL-99	TITLE: AMPLIFIER/POWER SUPPLY BOARD			
CHK R.C.	28/7/99				
DSGN LL	11-OCT-88	BOARD# 5371-002			B5371002
APP	7/28/99	MODEL 2350		SERIES 371	SHEET 24
13:11:40	26-JUL-99	COMP SIDE ☐	SLDR SIDE ☐	OUTLINE ☒	
COMP PASTE ☐	COMP MASK ☐	SLDR PASTE ☐	SLDR MASK ☐		

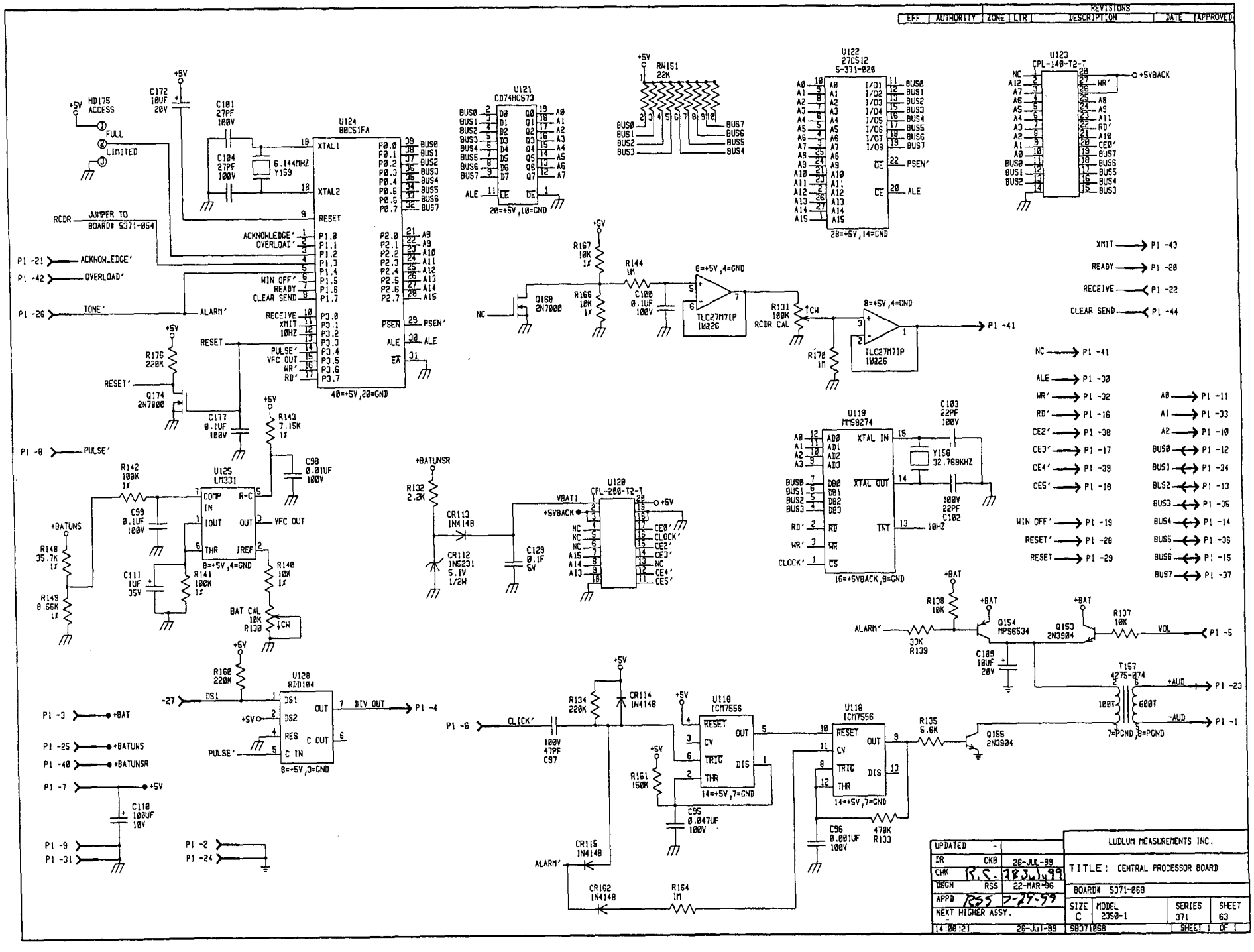
REVISIONS
EFF | AUTHORITY | ZONE | LTR | DESCRIPTION | DATE | APPROVED
HD175 ACCESS
FULL
LIMITED
RCDR
JUMPER TO BOARD# 5371-054
P1 -21 ACKNOWLEDGE'
P1 -42 OVERLOAD'
P1 -26 TONE'
ALARM'
P1 -8 PULSE'
RESET
RESET'
U124 80C51FA
XTAL1
XTAL2
RESET
ACKNOWLEDGE'
OVERLOAD'
WIN OFF'
READY
CLEAR SEND
RECEIVE
XMIT
10HZ
PULSE'
VFC OUT
WR'
RD'
PSEN
ALE
EA
40=+5V,20=GND
U121 CD74HC573
20=+5V,10=GND
U122 27C512 5-371-020
28=+5V,14=GND
U123 CPL-140-T2-T
+5VBACK
RN151 22K
XMIT → P1 -43
READY → P1 -20
RECEIVE ← P1 -22
CLEAR SEND ← P1 -44
NC → P1 -41
ALE → P1 -30
WR' → P1 -32
RD' → P1 -16
CE2' → P1 -38
CE3' → P1 -17
CE4' → P1 -39
CE5' → P1 -18
WIN OFF' → P1 -19
RESET' → P1 -28
RESET → P1 -29
A0 ↔ P1 -11
A1 ↔ P1 -33
A2 ↔ P1 -10
BUS0 ↔ P1 -12
BUS1 ↔ P1 -34
BUS2 ↔ P1 -13
BUS3 ↔ P1 -35
BUS4 ↔ P1 -14
BUS5 ↔ P1 -36
BUS6 ↔ P1 -15
BUS7 ↔ P1 -37
U119 MM58274
16=+5VBACK,8=GND
U125 LM331
8=+5V,4=GND
U120 CPL-200-T2-T
U128 RDD104
8=+5V,3=GND
U118 ICM7556
14=+5V,7=GND
TLC27M71P 10226
P1 -41
P1 -3 +BAT
P1 -25 +BATUNS
P1 -40 +BATUNSR
P1 -7 +5V
P1 -9
P1 -31
P1 -2
P1 -24
P1 -4
P1 -6
P1 -5
P1 -23
P1 -1
7=PGND,8=PGND
UPDATED
DR CKD 26-JUL-99
CHK R.C. 28 Jul 99
DSGN RSS 22-MAR-96
APPD 7-29-99
NEXT HIGHER ASSY.
14:00:21 26-JUL-99
LUDLUM MEASUREMENTS INC.
TITLE: CENTRAL PROCESSOR BOARD
BOARD# 5371-068
SIZE C | MODEL 2350-1 | SERIES 371 | SHEET 63
5371068 | SHEET 1 OF 1

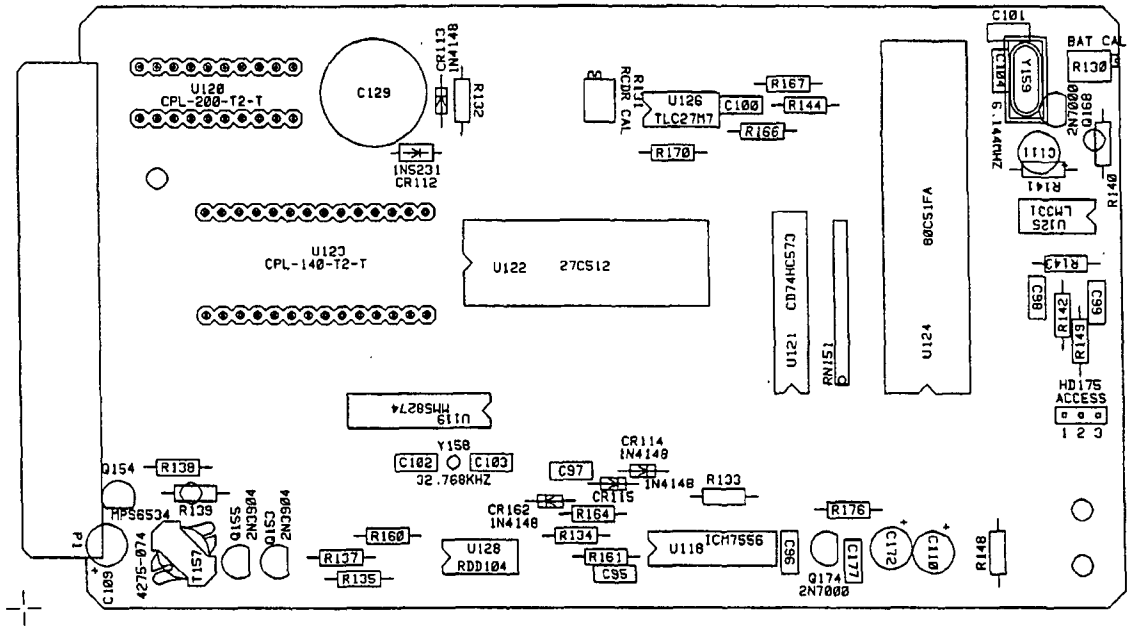

LUDLUM MEASUREMENTS INC. SWEETWATER, TX.			
DR CKB	09/17/96	TITLE: CENTRAL PROCESSOR BOARD	
CHK P.C.	July 28 99	BOARD: 5371-068	
DSGN RSS	09/17/96	MODEL: 2350-1	
APP BSS	7-29-99	FILENAME: BS371068	
COMPONENT	SOLDER	16:31:18	28-JUL-99
		REVISION	SERIES / SHEET
OUTLINE	OUTLINE	1.0	371 / 64

REVISIONS						
EFF	AUTHORITY	ZONE	LTR	DESCRIPTION	DATE	APPROVED

P1 -1	NC	P1 -28	NC
P1 -2	A12	P1 -27	WR
P1 -3	A7	P1 -26	NC
P1 -4	A6	P1 -25	A8
P1 -5	A5	P1 -24	A9
P1 -6	A4	P1 -23	A11
P1 -7	A3	P1 -22	RD'
P1 -8	A2	P1 -21	A10
P1 -9	A1	P1 -20	NC
P1 -10	A0	P1 -19	BUS7
P1 -11	BUS0	P1 -18	BUS6
P1 -12	BUS1	P1 -17	BUS5
P1 -13	BUS2	P1 -16	BUS4
P1 -14	NC	P1 -15	BUS3

P2 -1	VBAT1	P2 -20	+5V
P2 -2	+5VBACK	P2 -19	NC
P2 -3	NC	P2 -18	NC
P2 -4	NC	P2 -17	CE0'
P2 -5	NC	P2 -16	CLOCK'
P2 -6	NC	P2 -15	CE2'
P2 -7	A15	P2 -14	CE3'
P2 -8	A14	P2 -13	NC
P2 -9	A13	P2 -12	CE4'
P2 -10	GND	P2 -11	CE5'

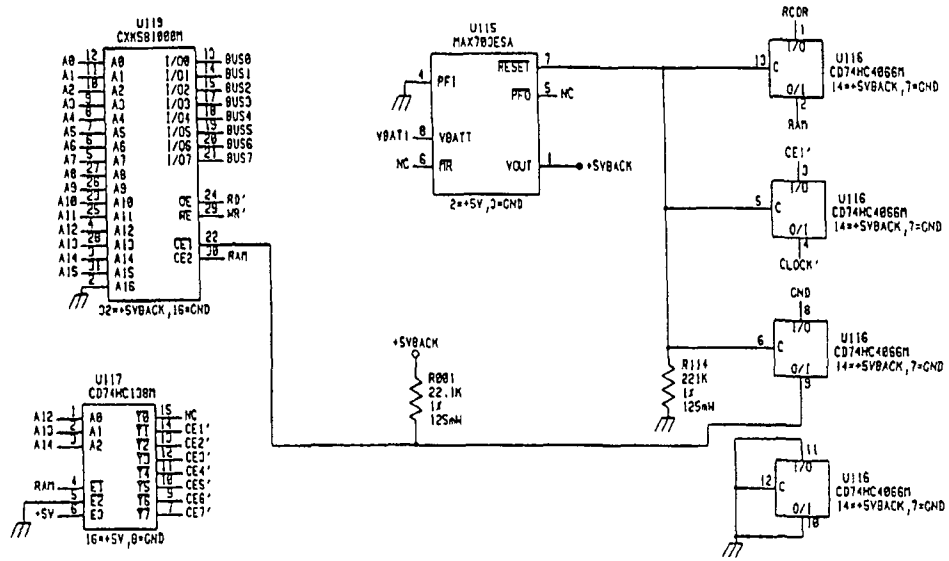

UPDATED -	/ /	LUDLUM MEASUREMENTS INC
DR CKB	08/14/95	TITLE: 64K MEMORY EXPANDER BOARD
CHK R.C.	3/4/96	
DSGN LL	05/12/95	BOARD# 5371-054
APPD JGW	3/4/96	SIZE D · MODEL 2350-1 · SERIES 371 · SHEET 50
NEXT HIGHER ASSY. -		
14:06:59	26-Feb-96	59J71054 · SHEET OF

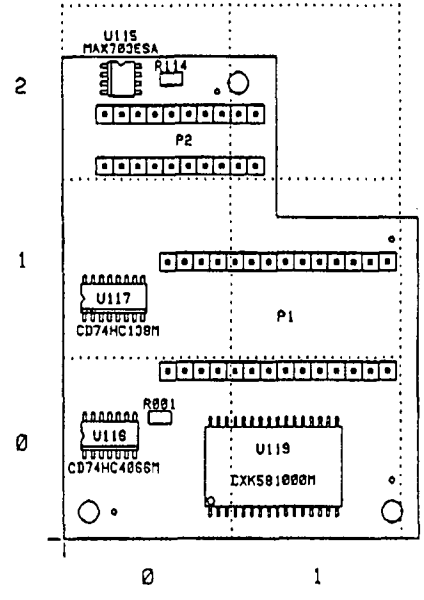

LUDLUM MEASUREMENTS INC. SWEETWATER, TX.				
DR CKB	08/14/95	TITLE: 128K MEMORY EXPANDER BRD.		
CHK R.C.	3/4/96	BOARD# 5371-054	85371054	
DSGN LL	05/12/95	MODEL 2350-1	SERIES 371	SHEET S1
APP JGW	3/4/96	COMP ARTWORK ☐	SLDR ARTWORK ☐	
08:38:42	21-Feb-96	COMP OUTLINE ☒	SLDR OUTLINE ☐	
COMP PASTE ☐	COMP MASK ☐	SLDR PASTE ☐	SLDR MASK ☐	

REVISIONS						
EFF	AUTHORITY	ZONE	LTR	DESCRIPTION	DATE	APPROVED

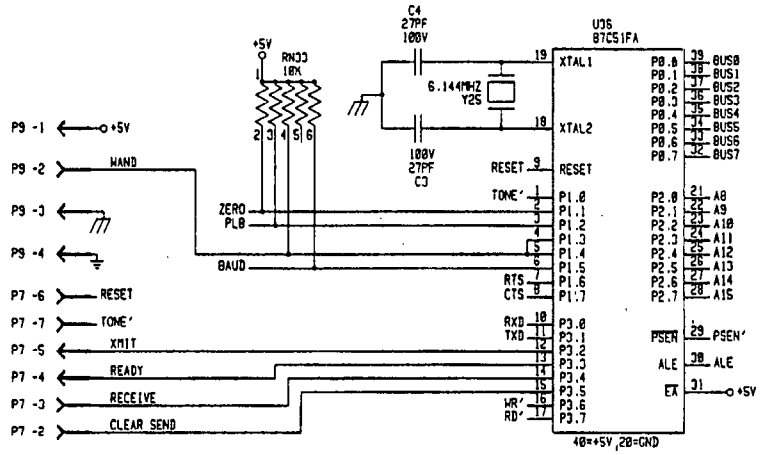

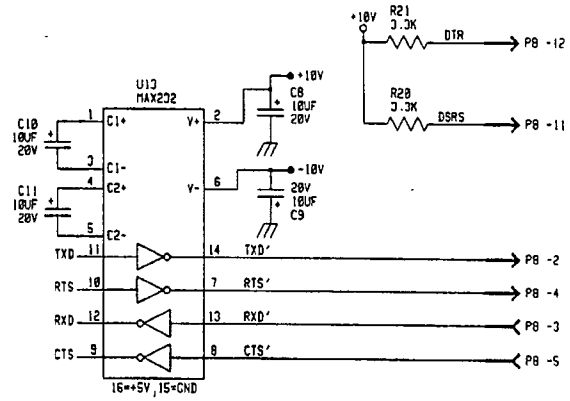

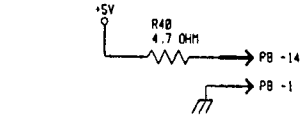

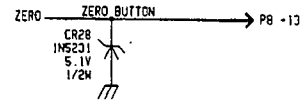

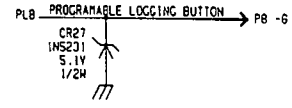

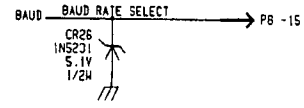

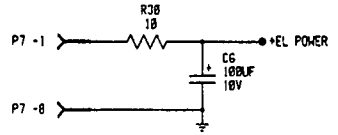

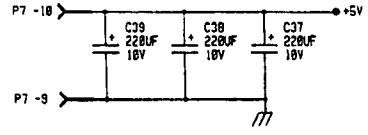

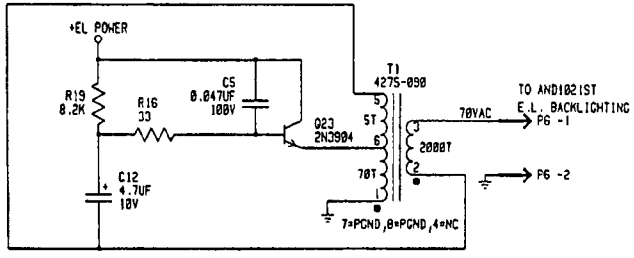

UPDATED -	/ /	LUDLUM MEASUREMENTS INC.	
DR CKD	11/20/95	TITLE: I/O INTERFACE	
CHK R.C.	3/4/96		
DSGN RSS	11/20/95	BOARD# 5371-063	
APPD JGW	3/4/96	SIZE D / MODEL 2350-1 / SERIES 371 / SHEET 58	
NEXT HIGHER ASSY. -			
16:29:49	29-Feb-96	5B371063	SHEET 1 OF 1

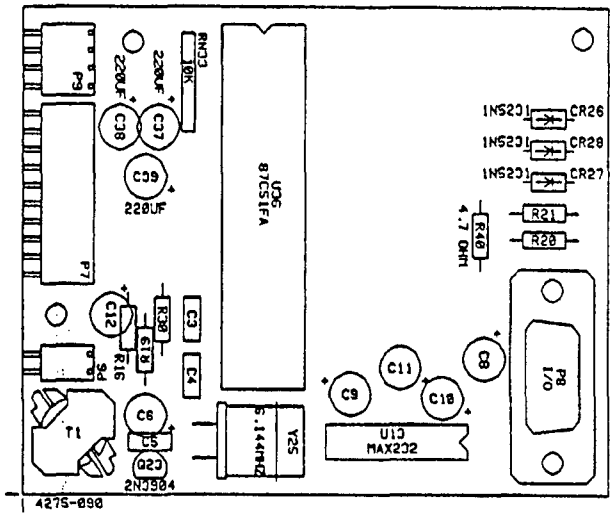

LUDLUM MEASUREMENTS INC. SWEETWATER, TX.					
DR	CKB	11/20/95	TITLE: I/O INTERFACE BOARD		
CHK	R.C.	3/4/96	BOARD# 5371-060	85371060	
DSGN	RSS	11/20/95	MODEL 2350-1	SERIES 371	SHEET 59
APP	JGW	3/7/96	COMP ARTWORK ☐	SLDR ARTWORK ☐	
16:30:15		29-Feb-96	COMP OUTLINE ☒	SLDR OUTLINE ☐	
COMP PASTE ☐		COMP MASK ☐	SLDR PASTE ☐	SLDR MASK ☐	

REVISIONS						
EFF	AUTHORITY	ZONE	LTR	DESCRIPTION	DATE	APPROVED

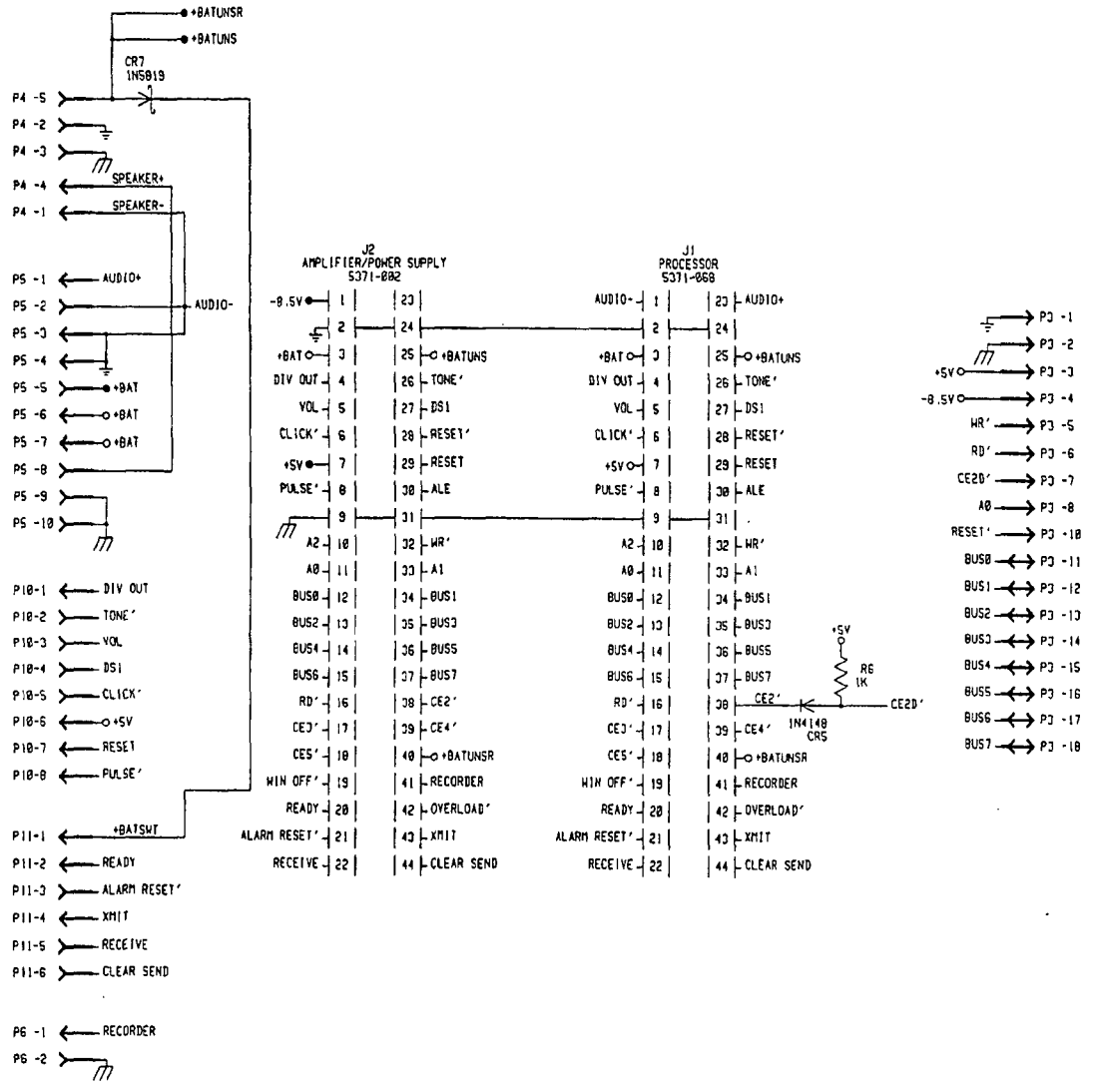

UPDATED -	/ /	LUDLUM MEASUREMENTS INC.
DR LL	9/27/88	TITLE: BACKPLANE
CHK	9/27/88	
DSGN LL	9/27/88	BOARD# 5371-003
APPD JBW	9/27/88	SIZE D · MODEL 2350-1 · SERIES 371 · SHEET 3
NEXT HIGHER ASSY. -		
08:55:18	17-Sep-98	5B371003 · SHEET 1 OF 1

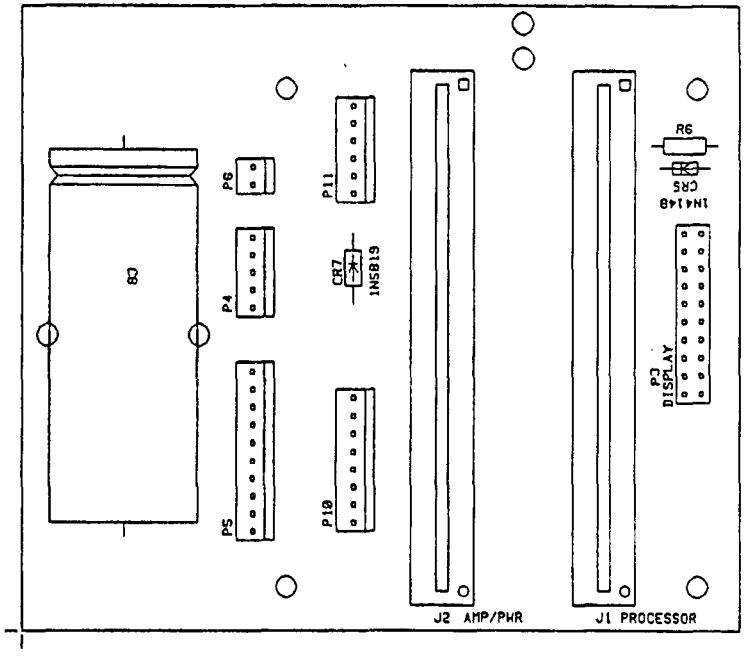

LUDLUM MEASUREMENTS INC. SWEETWATER, TX.					
DR LL	12/17/90	TITLE: BACKPLANE			
CHK R.C.	3/4/96	BOARD# 5371-003		8537100J	
DSGN LL	10/20/88	MODEL 2050		SERIES 371	SHEET 29
APP JGW	3/4/96	COMP ARTWORK ☐		SLDR ARTWORK ☐	
08:55:02	21-Feb-96	COMP OUTLINE ☒		SLDR OUTLINE ☐	
COMP PASTE ☐		COMP MASK ☐	SLDR PASTE ☐	SLDR MASK ☐	

REVISIONS						
EFF	AUTHORITY	ZONE	LTR	DESCRIPTION	DATE	APPROVED

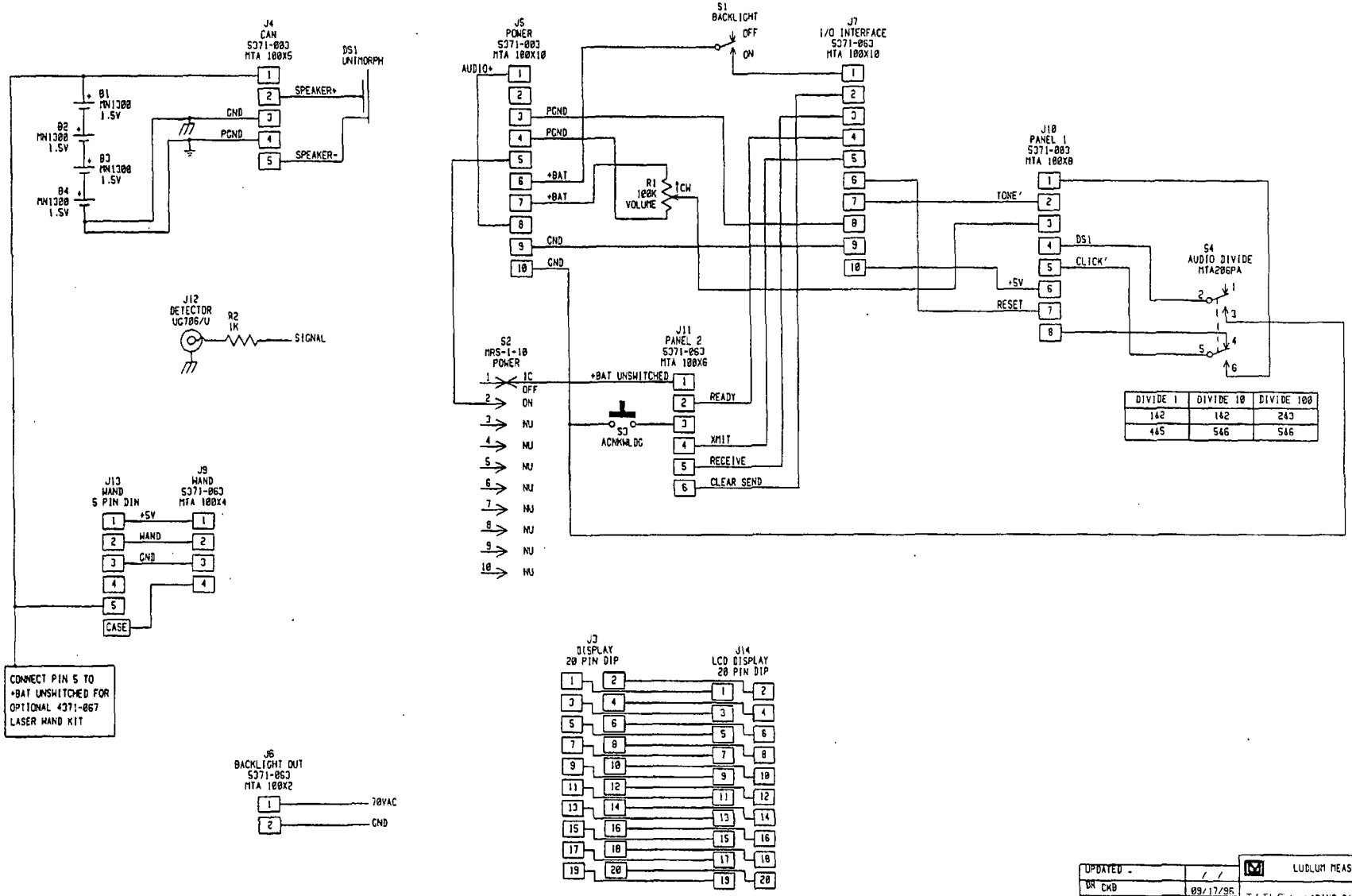

DIVIDE 1	DIVIDE 10	DIVIDE 100
142	142	243
465	546	546

UPDATED	/ /	LUDLUM MEASUREMENTS INC.
DR CKD	09/17/96	
CHK	9.17.96	TITLE: WIRING DIAGRAM
DSGN RSS	09/17/96	
APPD	9.17.96	5371-071
NEXT HIGHER ASSY.		SERIES 371 / SHEET 72
09:53:10	17-SEP-96	SHEET OF

LUDLUM MODEL 3
SURVEY METER

June 2007

Serial Number 239543 and Succeeding

Serial Numbers

LUDLUM MODEL 3
SURVEY METER

June 2007

Serial Number 239543 and Succeeding

Serial Numbers

LUDLUM MEASUREMENTS, INC.
501 OAK STREET, P.O. BOX 810
SWEETWATER, TEXAS 79556
325-235-5494, FAX: 325-235-4672

REV #	ALTERATIONS	DATE	BY
1	VALID	12/21/05	DDW
2	REDESIGNED BATTERY LID ARTWORK	8/11/06	CMC

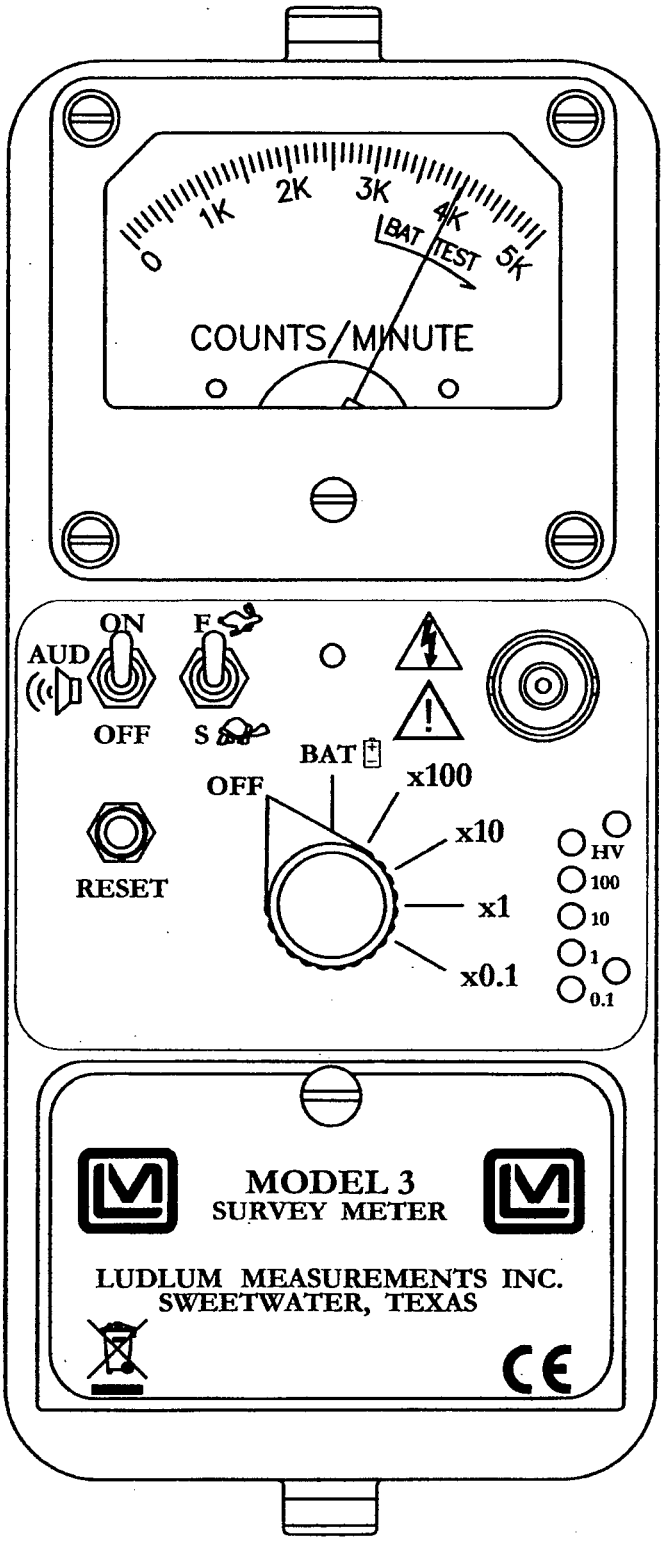

DWN	DATE	CHK	DATE	APP	DATE
CMC	8-11-06			JBW	8-14-06

DWG NUM: 4464-041 SCALE: FULL ☒ OTHER

TITLE: M 3 FRONT PANEL

LUDLUM MEASUREMENTS, INC. 501 OAK STREET SWEETWATER, TEXAS 79556

SERIES: 464 SHEET: 41A

Table of Contents

Introduction **1**

Getting Started **2**

Unpacking and Repacking **2-1**

Battery Installation **2-1**

Connecting a Detector to the Instrument **2-2**

Battery Test **2-2**

Instrument Test **2-2**

Reading the Meter Face Dial **2-3**

Operational Check **2-6**

Specifications **3**

Identification of Controls and Functions **4**

Safety Considerations **5**

Environmental Conditions for Normal Use **5-1**

Warning Markings and Symbols **5-1**

Cleaning and Maintenance Precautions **5-2**

Calibration and Maintenance **6**

Calibration **6-1**

Exposure Rate Calibration **6-1**

CPM Calibration **6-2**

Establishing an Operating Point **6-3**

Maintenance **6-4**

Recalibration **6-4**

Batteries **6-5**

Troubleshooting **7**

Troubleshooting Electronics which utilize a G-M Detector or Scintillator **7-1**

Troubleshooting G-M Detectors **7-3**

Troubleshooting Scintillators **7-4**

Technical Theory of Operation ***8***

Low Voltage Supply **8-1**

High Voltage Supply **8-1**

Detector Input **8-1**

Amplifier **8-1**

Discriminator **8-2**

Audio **8-2**

Scale Ranging **8-2**

Meter Drive **8-2**

Meter Reset **8-2**

Fast/Slow Time Constant **8-2**

Recycling **9**

Parts List ***10***

Model 3 Survey Meter **10-1**

Main Board, Drawing 464 × 204 **10-1**

Wiring Diagram, Drawing 464 × 212 **10-3**

Drawings and Diagrams ***11***

Section 1

Introduction

The Model 3 is a portable radiation survey instrument with four linear ranges used with exposure rate or cpm (counts per minute) meter dials or a combination of both, exposure rate and count rate (referred to as "combo") meter face dials. The instrument features a regulated high-voltage power supply, unimorph speaker with audio ON-OFF capability, fast-slow meter response, meter reset button and a six-position switch for selecting battery check or scale multiples of ×0.1, ×1, ×10 and ×100. Each range multiplier has its own calibration potentiometer. The unit body and meter housing are made of cast aluminum and the can is 0.090" thick aluminum.

The audio provides a brief "click" for every radiation event detected. It also provides a steady tone to warn the user of a low battery condition. This low battery warning overrides the position of the AUD ON-OFF switch.

Any Geiger-Mueller (G-M) detector offered by Ludlum Measurements will operate with this unit as well as any scintillation type detector. The instrument is typically set at 900 volts for G-M tube operation. For special requirements of G-M or scintillation detectors, the instrument high voltage may be adjusted from 200 to 1500 volts.

The unit is operated with two "D" cell batteries for operation from –4°F (–20°C) to 122°F (50°C). For instrument operation below 32°F (0°C) either very fresh alkaline or rechargeable NiCd batteries should be used.

Section 2

Getting Started

Unpacking and Repacking

Remove the calibration certificate and place it in a secure location. Remove the instrument and accessories (batteries, cable, etc.) and ensure that all of the items listed on the packing list are in the carton. Check individual item serial numbers and ensure calibration certificates match. The Model 3 serial number is located on the front panel below the battery compartment. Most Ludlum Measurements, Inc. detectors have a label on the base or body of the detector for model and serial number identification.

Important!

If multiple shipments are received, ensure that the detectors and instruments are not interchanged. Each instrument is calibrated to specific detector(s), and therefore not interchangeable.

To return an instrument for repair or calibration, provide sufficient packing material to prevent damage during shipment. Also provide appropriate warning labels to ensure careful handling. Include detector(s) and related cable(s) for calibration. Include brief information as to the reason for return, as well as return shipping instructions:

- **Return shipping address**
- **Customer name or contact**
- **Telephone number**
- **Description of service requested and all other necessary information**

Battery Installation

Ensure the Model 3 range selector switch is in the OFF position. Open the battery lid by pushing down and turning the quarter-turn thumbscrew

counterclockwise ¼ turn. Install two "D" size batteries in the compartment.

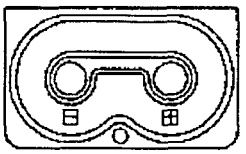

Note the (+) and (-) marks inside the battery door. Match the battery polarity to these marks. Close the battery box lid, push down and turn the quarter-turn thumb screw clockwise ¼ turn.

Note:

The center post of a "D" size battery is positive.

Connecting a Detector to the Instrument

Caution!

The detector operating voltage (HV) is supplied to the detector via the detector input connector. A mild electric shock may occur if you make contact with the center pin of the input connector. Switch the Model 3 range selector switch to the OFF position before connecting or disconnecting the cable or detector.

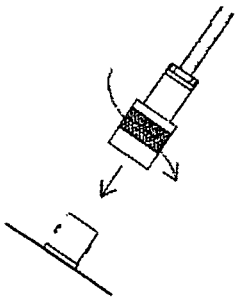

Connect one end of a detector cable to the detector by firmly pushing the connectors together while twisting clockwise ¼ turn. Repeat the process in the same manner with the other end of the cable and the instrument.

Battery Test

Check the batteries daily or prior to use, whichever is less frequent, to assure proper operation of the instrument. Move the range multiplier switch to the BAT position. Ensure that the meter needle deflects to the battery check portion on the meter scale. If the meter does not respond, check to see if the batteries have been correctly installed. Replace the batteries if necessary.

Instrument Test

After checking the batteries, turn the instrument range switch to the X100 position. Place the AUD ON-OFF switch in the ON position. Expose the detector to a check source. The instrument speaker should emit "clicks" relative to the rate of counts detected. The "AUD ON/OFF" switch will silence the audible clicks if in the OFF position. It is recommended that the

"AUD ON/OFF" switch be kept in the OFF position when not needed in order to preserve battery life.

The detector cable can be a source of problems. Test the detector cable by bending or flexing either end of the cable and checking for an increase of counts detected. Replace the cable if increases in the rate of counts are detected.

Check the meter reset function by depressing the "RES" pushbutton switch and ensuring the meter needle drops to "0".

Once this procedure has been completed, the instrument is ready for use.

Reading the Meter Face Dial

Reading the meter face is very important for consistent measurements. There are, in general, three types of meter faces: 1) count rate (typically cpm – counts per minute) 2) exposure rate (typically mR/hr) and 3) "combo" (typically cpm and mR/hr.) The following examples are intended to help the user interpret the correct reading.

The normal procedure is to turn the range selector switch to the highest range and if no readings are seen on the meter, turn the selector switch down to the lower scales until a reading is seen. The ranges on the instrument selector switch are multipliers for the meter reading. A typical single scale (one arc) meter face with a cpm (counts per minute) dial is shown below.

The count rate scale reads 0-5K COUNTS/MINUTE (kcpm or 1000's of counts per minute) and has BAT TEST on the dial.

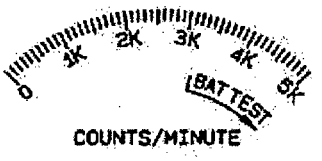

If the needle is pointing as indicated below and the instrument range selection switch is on the ×0.1 scale multiple, then the reading is 3.5 kcpm (multiplied by) ×0.1 = 350cpm.

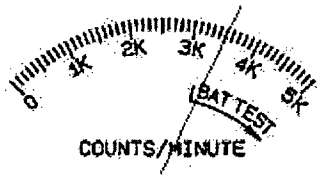

The same needle indications on successive ranges would be:

×1 = 3.5 kcpm (or 3,500 cpm)

×10 = 35 kcpm (or 35,000 cpm)

×100 = 350 kcpm (or 350,000 cpm)

A typical dual scale (two arcs) meter face is shown below. The top scale reads 0-2 mR/hr. The bottom scale also reads 0-2 mR/hr and is for ×100 only scale. The ×100 ONLY scale will work correctly when the multiplier switch is in the ×100 range. The meter face also has a BAT TEST position on the dial.

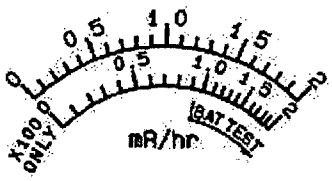

If the needle is pointing as indicated below and the range selection switch is on the ×0.1 scale, then the reading is 0.1 mR/hr.

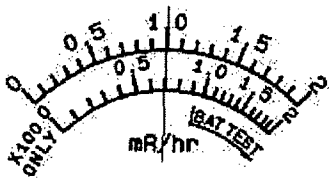

The same needle indications on successive ranges would be:

×1 = 1.0 mR/hr (or 1,000 μR/hr)

×10 = 10 mR/hr (or 10,000 μR/hr)

×100 = 70 mR/hr (or 70,000 μR/hr)

The dial shown below has three arcs: a counts per minute scale (cpm), a linear mR/hr scale, and a non-linear mR/hr scale for the ×100 range only. The meter face also has a BAT TEST position.

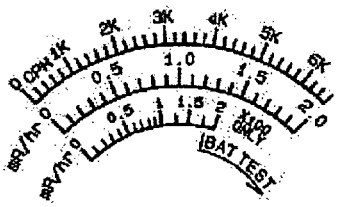

The top cpm scale is valid for the ×0.1, ×1, ×10 and the ×100 ranges. The linear (middle) mR/hr scale is valid for the ×0.1, ×1 and×10 ranges. The non-linear mR/hr scale is valid for the ×100 range only. This meter face is commonly referred to as a "combo" meter face, since it has both, count rate (cpm) and exposure rate (mR/hr) arcs. Simpler meter faces may only have a count rate or an exposure rate arc(s) like the previous meter faces shown.

A "combo" meter face is specifically designed for a particular detector. In the example above, the 1.0 mR/hr mark on the middle arc lines up with 3.3kcpm on the upper arc. The meter face in this example works with a detector that receives 3.3kcpm per mR/hr (the Ludlum Model 44-9 pancake detector.)

In the following picture, the needle is on the first tick mark past the 4kcpm mark. Therefore, if the instrument selector switch is on the ×0.1 range, the reading is 4.2kcpm (multiplied by) ×0.1 = 420cpm.

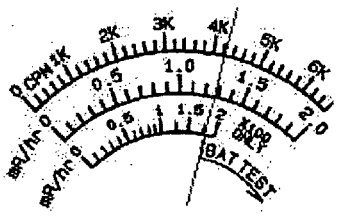

The same needle indications on successive ranges would be:

×1 = 4.2kcpm (or 4,200 cpm)

×10 = 42kcpm (or 42,000 cpm)

×100 = 420kcpm (or 420,000 cpm)

If you use the mR/hr scales, then the readings would be:

×0.1 = 0.13 mR/hr

×1 = 1.3 mR/hr

×10 = 13 mR/hr

×100 = 180 mR/hr*

Note:

*This reading is using the bottom (non-linear) scale.

Many different dials are available, but each can be used as described above.

Operational Check

To assure proper operation of the instrument and detectors(s) between calibrations, an instrument operational check including battery test and instrument test (as described on pages 2-2 and 2-3) should be performed at least daily or prior to use, whichever is less frequent. A reference reading (or readings) with a check source should be obtained with the detector(s) in a constant and reproducible manner at the time of calibration or at the time the instrument is received in the field.

If at any time the instrument fails to read within 20% of the reference reading when using the same check source, it should be sent to a calibration facility for recalibration and/or repair. If desired, multiple readings may be taken at different distances and/or with different sources so that other ranges or scales are checked.

Section 3

Specifications

Power: two "D" cell batteries housed in a sealed externally accessible compartment.

Battery Life: typically greater than 2000 hours with alkaline batteries and with the AUD ON-OFF switch in the OFF position.

End-of-Battery Life Warning: At 2.1 Vdc the meter needle will drop to the edge of the BAT TEST or BAT OK area when the meter selector switch is moved to the BAT position. At 2.0 Vdc a steady audible tone will be emitted to warn the user of the low battery condition.

High Voltage: adjustable from 400 to 1500 volts.

Threshold: fixed at 40 mV ± 10 mV.

Meter: 2.5" (6.4 cm) arc, 1 mA analog type.

Meter Dial: 0-2 mR/hr, or 0-5k cpm, BAT TEST (others available).

Multipliers: ×0.1, ×1, ×10, ×100.

Range: typically 0-200 mR/hr, or 0-500,000 counts/minute (cpm).

Linearity: reading within 10% of true value with detector connected.

Battery Dependence: less than 3% change in readings to battery failure indication.

Calibration Controls: individual potentiometers for each range; accessible from front of instrument (protective cover provided).

Audio: built-in unimorph speaker with ON-OFF switch (greater than 60 dB at 2 feet).

Response: toggle switch for fast (4 seconds) or slow (22 seconds) from 10% to 90% of final reading.

Reset: pushbutton to zero the meter.

Connector: series "C" (other available).

Size: 6.5" (16.5 cm) H × 3.5" (8.9 cm) W × 8.5" (21.6 cm) L.

Weight: 3.5 lbs. (1.6 kg) including batteries.

Construction: cast and drawn aluminum with beige powder-coat

Cable: 39-inch with "C" connector (others available).

Section 4

Identification of Controls and Functions

See the Model 3 FRONT PANEL drawing at the beginning of this manual to reference the following controls:

Meter: 2.5" (6.4cm) arc, 1 mA analog type with pivot-and-jewel suspension. Typical meter dials are 0-2 mR/hr, 0-20 μSv/h, 0-5k cpm or combination of exposure rates (0-2 mR/hr or 0-20 μSv/h) and cpm and BAT TEST.

Connector: Used to connect the detector to the instrument. Typically series "C" but can be "BNC", "MHV", "UHF", or others.

Range Selector Switch: A six-position switch marked OFF, BAT, ×100, ×10, ×1, ×0.1. Turning the range selector switch from OFF to BAT provides the operator with a battery check of the instrument. A BAT check scale on the meter provides a visual means of checking the battery-charge status. Moving the range selector switch to one of the range multiplier positions (×100, ×10, ×1, ×0.1) provides the operator with an overall range of 0 to 500,000 cpm. Multiply the scale reading by the multiplier to determine the actual scale reading.

Calibration Controls: Recessed potentiometers which are used to calibrate the individual range selections and allow for high voltage adjustment from 400 to 1500 volts. A protective cover is provided to prevent tampering.

Battery Compartment: Sealed compartment to house two "D" cell batteries.

RESET Button: When depressed, this switch provides a rapid means to drive the meter to zero.

AUD ON-OFF Switch: In the ON position, operates the unimorph speaker, located on the left side of the instrument. The frequency of the clicks is relative to the rate of the incoming pulses. The higher the rate,

the higher the audio frequency. The audio should be turned OFF when not required to reduce battery drain.

Note:

A low battery condition results in a steady audio tone regardless of the position of the AUD ON-OFF switch.

F-S Toggle Switch: Provides meter response. Selecting the fast, "F" position of the toggle switch provides 90% of full scale meter deflection in four seconds. In the slow, "S" position, 90% of full scale meter deflection takes 22 seconds. In "F" position there is fast response and large meter deviation. The "S" position should be used for slow response and damped, meter deviation.

Note:

The slow response position is normally used when the instrument is displaying low numbers that require a more stable meter movement. The fast response position is used at high rate levels.

Section 5

Safety Considerations

Environmental Conditions for Normal Use

Indoor or outdoor use

No maximum altitude

Temperature range of –20°C to 50°C (–4°F to 122°F). May be certified for operation from –40°C to 65°C (–40°F to 150°F).

Maximum relative humidity of less then 95% (non-condensing)

Pollution Degree 1 (as defined by IEC 664).

Warning Markings and Symbols

Caution!

The operator or responsible body is cautioned that the protection provided by the equipment may be impaired if the equipment is used in a manner not specified by Ludlum Measurements, Inc.

The Model 3 Survey Meter is marked with the following symbols:

CAUTION, RISK OF ELECTRIC SHOCK (per ISO 3864, No. B.3.6) – designates a terminal (connector) that allows connection to a voltage exceeding 1 kV. Contact with the subject connector while the instrument is on or shortly after turning off may result in electric shock. This symbol appears on the front panel.

CAUTION (per ISO 3864, No. B.3.1) – designates hazardous live voltage and risk of electric shock. During normal use, internal components are hazardous live. This instrument must be isolated or disconnected from the hazardous live voltage before accessing the internal components. This symbol appears on the front panel. **Note the following precautions:**

Warning!

The operator is strongly cautioned to take the following precautions to avoid contact with internal hazardous live parts that are accessible using a tool:

1. Turn the instrument power OFF and remove the batteries.
2. Allow the instrument to sit for 1 minute before accessing internal components.

The "**crossed-out wheelie bin**" symbol notifies the consumer that the product is not to be mixed with unsorted municipal waste when discarding; each material must be separated. The symbol is placed on the battery compartment lid. See section 9, "Recycling" for further information.

Cleaning and Maintenance Precautions

The Model 3 may be cleaned externally with a damp cloth, using only water as the wetting agent. Do not immerse the instrument in any liquid. Observe the following precautions when cleaning or performing maintenance on the instrument:

1. Turn the instrument OFF and remove the batteries.
2. Allow the instrument to sit for 1 minute before cleaning the exterior or accessing any internal components for maintenance.

Section 6

Calibration and Maintenance

Calibration

Calibration controls are located on the front of the instrument under the calibration cover. The controls may be adjusted with a 1/8-inch blade screwdriver.

Note:

Local procedures may supersede the following

The instrument may be calibrated using Exposure Rate Calibration or CPM Calibration. Both methods are described below. Unless otherwise specified, the instrument is calibrated to Exposure Rate at the factory.

Note:

Measure High Voltage with a Model 500 Pulser or a High Impedance voltmeter with a high meg probe. If one of these instruments is not available use a voltmeter with a minimum of 1000 megohm input resistance.

Exposure Rate Calibration

Connect the input of the instrument to a negative pulse generator, such as a Ludlum Model 500 Pulser.

Caution!

The instrument input operates at a high potential. Connect the pulse generator through a 0.01μF, 3,000-volt capacitor, unless the pulse generator is already protected.

Adjust the HV control for the proper operation voltage of the detector to be used. Disconnect the Pulser and connect the detector to the instrument.

Turn the range selector switch to the ×100 position. Expose the detector to a calibrated gamma field which corresponds to approximately 80% of full-scale meter deflection. Adjust the ×100 calibration control for the proper reading.

Reposition the detector so the field corresponds to approximately 20% of full-scale meter deflection. Confirm that the meter reading is within ± 10% of the field.

Repeat this process for the ×10, ×1 and ×0.1 ranges.

If your gamma exposure range cannot calibrate two positions on each scale, the Pulser may be used to "electronically calibrate" the remaining points. Reconnect the Pulser to the instrument and determine the count rate conversion at a previous range calibration point. Then use that conversion rate to calibrate other points or scales.

If for example, you can exposure rate calibrate the 400 μR/hr point, first use the Pulser to get the count rate equivalent to the calibrated 400 μR/hr point. Then switch the Pulser "multiplier" switch to the next lower setting, and adjust the appropriate calibration control on the Model 3 for the meter to read 40 μR/hr.

CPM Calibration

Connect the input of the instrument to a negative pulse generator, such as a Ludlum Model 500 Pulser.

Caution!

The instrument input operates at a high potential. Connect the pulse generator through a 0.01μF, 3,000-volt capacitor, unless the pulse generator is already protected

Adjust the HV control for the proper operating voltage of the detector to be used. Adjust the Pulser negative pulse frequency to provide a meter

deflection of approximately 80% of full-scale on the ×100 range. Adjust the ×100 calibration control for the proper reading.

Check the 20% scale indication of the Model 3 by reducing the Pulser count rate by a factor of 4. The Model 3 should read within 10% of the actual pulse rate. Decrease the pulse rate of the Model 500 by one decade and turn the Model 3 range selector to the next lower range. Repeat the above procedure for the remaining lower ranges.

Note:

In the event that any reading is not within 10% of the true value on any scale after any of the above calibration methods is performed, a reading within 20% of true value shall be acceptable- if a calibration graph or chart is provided with the instrument. Instruments that cannot meet these criteria are defective and require repair.

Establishing an Operating Point

The operating point for the instrument and detector is established by setting the instrument high voltage (HV). The proper selection of this point is the key to instrument performance. Efficiency, background sensitivity and noise are fixed by the physical makeup of the given detector and rarely vary from unit to unit. However, the selection of the operating point makes a marked difference in the apparent contribution of these three sources of count.

In setting the operating point, the final result of the adjustment is to establish the system gain so that the desirable signal pulses (including background) are above the discrimination level and the unwanted pulses from noise are below the discrimination level and are therefore not counted. The system gain is controlled by adjusting the high voltage.

Note:

Measure the high voltage with a Ludlum Model 500 Pulser. If the Pulser does not have a high voltage readout, use a high impedance voltmeter with at least 1000 megohm input resistance to measure the high voltage.

G-M Detectors: In the special case of G-M detectors, a minimum voltage must be applied to establish the Geiger-Mueller characteristic. The output pulse height of the G-M Detector is not proportional to the energy of the detected radiation. Most G-M detectors operate at 900 volts, although some miniature detectors operate at 400-500 volts. Refer to the detector operating manual for specific recommendations. If a recommended setting is unavailable, plot a HV versus count rate curve to produce a plateau graph similar to the one displayed below. Adjust the HV for 25-50 volts above the knee or start of the plateau. For mixed detector use, the high voltage may be tailed for both, as long as the G-M detector is operated within the recommended voltage range.

Scintillators: Scintillation type detectors have a wide gain spectrum, typically 1000:1 at a single operating point. An operating voltage versus count rate curve (plateau) must be established to determine the proper operating voltage. The operating voltage is typically set above the knee of the plateau. Plot the HV versus background and source count to produce a plateau graph similar to the one in the figure below. Adjust the HV to 25-50 volts above the knee or start of the plateau. This provides the most stable operating point for the detector.

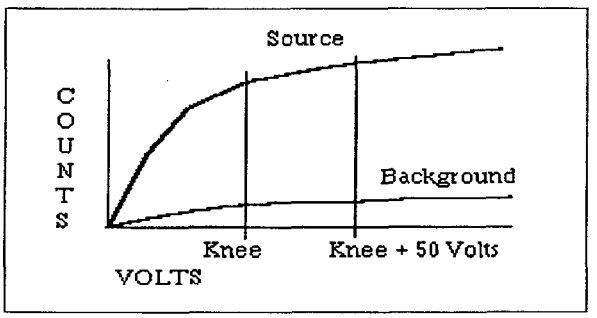

Note:

If more than one detector is to be used with the instrument and the operating voltages are different, the HV will have to be readjusted for each detector substitution.

Maintenance

Instrument maintenance consists of keeping the instrument clean and periodically checking the batteries and the calibration. The Model 3 instrument may be cleaned with a damp cloth (using only water as the

wetting agent). Do not immerse instrument in any liquid. Observe the following precautions when cleaning:

1. Turn the instrument OFF and remove the batteries.
2. Allow the instrument to sit for 1 minute before accessing internal components.

Recalibration

Recalibration should be accomplished after maintenance or adjustments have been performed on the instrument. Recalibration is not normally required following instrument cleaning, battery replacement, or detector cable replacement.

Note:

Ludlum Measurements, Inc. recommends recalibration at intervals no greater than one year. Check the appropriate regulations to determine required recalibration intervals.

Ludlum Measurements offers a full service repair and calibration department. We not only repair and calibrate our own instruments but most other manufacturer's instruments. Calibration procedures are available upon request for customers who choose to calibrate their own instruments.

Batteries

The batteries should be removed any time the instrument is placed into storage. Battery leakage may cause corrosion on the battery contacts, which must be scraped off and/or washed using a paste solution made from baking soda and water. Use a spanner wrench to unscrew the battery contact insulators, exposing the internal contacts and battery springs. Removal of the handle will facilitate access to these contacts.

Note:

Never store the instrument over 30 days without removing the batteries. Although this instrument will operate at very high ambient temperatures, battery seal failure may occur at temperatures as low as 100°F.

Section 7

Troubleshooting

Occasionally, you may encounter problems with your LMI instrument or detector that may be repaired or resolved in the field, saving turnaround time and expense in returning the instrument to us for repair. Toward that end, LMI electronics technicians offer the following tips for troubleshooting the most common problems. Where several steps are given, perform them in order until the problem is corrected. Keep in mind that with this instrument, the most common problems encountered are: (1) detector cables, (2) sticky meters, (3) battery contacts.

Note that the first troubleshooting tip is for determining whether the problem is with the electronics or with the detector. A Ludlum Model 500 Pulser is invaluable at this point, because of its ability to simultaneously check high voltage, input sensitivity or threshold, and the electronics for proper counting.

We hope these tips will prove to be helpful. As always, please call if you encounter difficulty in resolving a problem or if you have any questions.

Troubleshooting Electronics which utilize a G-M Detector or Scintillator

SYMPTOM	POSSIBLE SOLUTION
no power (or meter does not reach BAT TEST or BAT OK mark)	1. Check batteries and replace if weak. 2. Check polarity (See marks inside batter lid). Are the batteries installed backwards?

SYMPTOM	POSSIBLE SOLUTION
no power (or meter does not reach BAT TEST or BAT OK mark) (continued)	3. Check battery contacts. Clean them with rough sandpaper or use an engraver to clean the tips. 4. Remove the can and check for loose or broken wires.
nonlinear Readings	1. Check the high voltage (HV) using a Ludlum Model 500 Pulser (or equivalent). If a Multimeter is used to check the HV, ensure that one with high impedance is used, as a standard Multimeter could be damaged in this process. 2. Check for noise in the detector cable by disconnecting the detector, placing the instrument on the lowest range setting, and wiggling the cable while observing the meter face for significant changes in readings. 3. Check for "sticky" meter movement. Does the reading change when you tap the meter? Does the meter needle "stick" at any spot? 4. Check the "meter zero." Turn the power OFF. The meter should come to rest on "0".
meter goes full-scale or "pegs out"	1. Replace the detector cable to determine whether or not the cable has failed- causing excessive noise. 2. Check the HV and, if possible, the input threshold for proper setting.

SYMPTOM	POSSIBLE SOLUTION
meter goes full-scale or "pegs out" (continued)	3. Remove the can and check for loose or broken wires.
	4. Ensure that the instrument's "can" is properly attached. When attached properly, the speaker will be located on the left side of the instrument. If the can is on backwards, interference between the speaker and the input preamplifier may cause noise.
no response to radiation	1. Substitute a "known good" detector and/or cable.
	2. Has the correct operating voltage been set? Refer to the calibration certificate or detector instruction manual for correct operating voltage. If the instrument uses multiple detectors, confirm that the high voltage is matched to the current detector being used.
no audio	1. Ensure that the AUD ON-OFF switch is in the ON position.
	2. Remove the instrument housing and check the connection between the circuit board and the speaker. Plug in the 2-pin connector if necessary.

Troubleshooting G-M Detectors

1. If the tube has a thin mica window, check for window breakage. If damage is evident, the tube must be replaced.

2. Check the HV. For most G-M tubes, the voltage is normally 900 Vdc, or 460-550 Vdc for "peanut" tubes (Ludlum Model 133 series).

3. If the input sensitivity is too low, the user could see some double-pulsing.

4. Wires to the tube may be broken or the crimped connector could have a loose wire.

Troubleshooting Scintillators

1. Alpha or alpha/beta scintillators are prone to light leaks. They can be tested for this problem in a dark room or with a bright light. If a light leak is determined, changing the Mylar window assembly will usually fix the problem.

Note:

When replacing the window, make sure to use a window made with the same thickness Mylar and the same number of layers as the original window.

2. Verify that the HV and input sensitivity are correct. Alpha and gamma scintillators typically operate from 10-35 mV. High voltage varies with the photomultiplier tubes (PMT) from as low as 600 Vdc, to as high as 1400 Vdc.

3. On a gamma scintillator, visually inspect the crystal for breakage or humidity leakage. Water inside the crystal will turn it yellow and gradually degrade performance.

4. Check the PMT to see if the photocathode still exists. If the end of the PMT is clear (not brownish), this indicates a loss of vacuum which will render the PMT useless.

Section 8

Technical Theory of Operation

Low Voltage Supply

Battery voltage is coupled to U11 and associated components (a switching regulator) to provide 5 volts at pin 8 to power all logic circuits. A voltage divider (R27 and R32) located at pin 1 of U11 sets the end-of-battery–life squeal at 2.0 Vdc. Components R12 and C30 provide filtering to create +5 VA used by the amplifier and discriminator circuits.

High Voltage Supply

High voltage is developed by pulses from the switching regulator U13 to transformer T1. High voltage is multiplied by the ladder network of diodes CR3 through CR7 and capacitors C18 through C27. High voltage is coupled back through R39 to pin 8 of U13. High voltage output is set by front panel potentiometer R42, which sets the voltage feedback of 1.31 Vdc to pin 8 of U13. R38 and C28 provide filtering.

Detector Input

Detector pulses are coupled from the detector through C6 to amplifier input pin 2 of U4. CR1 protects U4 from input shorts. R37 couples the detector to the high voltage supply.

Amplifier

A self-biased amplifier provides gain in proportion to R15 divided by R14, with some gain loss due to feedback capacitor C4. A transistor (pin 3 of U4) provides amplification. U6 is configures as a constant current source to pin 3 of U4. The output self-biases to 2 Vbe (approximately 1.4 volts) at the emitter of Q1. This provides just enough bias current through pin 3 of U4 to conduct all of the current from the current source. Positive pulses from the emitter of Q1 are coupled to the discriminator.

Discriminator

Comparator U8 provides discrimination. The discriminator is set by a voltage divider (R21 and R23), coupled to pin 3 of U8. As the amplified pulses at pin 4 of U8 increase above the discriminator voltage, 5 volt negative pulses are produced at pin 1 of U8. These pulses are coupled to pin 5 of U9 for meter drive and pin 12 of U9 for audio.

Audio

Discriminator pulses are coupled to univibrator pin 12 of U9. The front panel audio ON-OFF selector controls the reset at pin 13 of U9. When ON, pulses from pin 10 of U9 turn on oscillator U12, which drives the housing-mounted unimorph speaker. Speaker tone is set by R31 and C14. Tone duration is controlled by R22 and C7.

Scale Ranging

Detector pulses from the discriminator are coupled to univibrator pin 5 of U9. For each scale, the pulse width of pin 6 of U9 is changed by a factor of 10 with the actual pulse width being controlled by the front panel switch, the analog switches U1 and U2, and the related potentiometers. This arrangement allows the same current to be delivered to C9 by 1 count on the ×0.1 range as 1000 counts on the ×100 range.

Meter Drive

Pulses from pin 6 of U9 charge capacitor C9. A constant current driver (opamp U10 and transistor Q2) delivers proportional current to the meter. For battery test (BAT TEST), the meter is directly coupled by the analog switch U3 to the batteries through resistor R8.

Meter Reset

Ratemeter reset is initiated by changing the voltage differential at C9 to zero when the RESET button is depressed.

Fast/Slow Time Constant

For the slow time constant, C17 is switched from the output of the meter drive to parallel C9.

Section 9

Recycling

Ludlum Measurements, Inc. supports the recycling of the electronics products it produces for the purpose of protecting the environment and to comply with all regional, national and international agencies that promote economically and environmentally sustainable recycling systems. To this end, Ludlum Measurements, Inc. strives to supply the consumer of its goods with information regarding reuse and recycling of the many different types of materials used in its products. With many different agencies, public and private, involved in this pursuit it becomes evident that a myriad of methods can be used in the process of recycling. Therefore, Ludlum Measurements, Inc. does not suggest one particular method over another, but simply desires to inform its consumers of the range of recyclable materials present in its products, so that the user will have flexibility in following all local and federal laws.

The following types of recyclable materials are present in Ludlum Measurements, Inc. electronics products, and should be recycled separately. The list is not all-inclusive, nor does it suggest that all materials are present in each piece of equipment:

Batteries	Glass	Aluminum and Stainless Steel
Circuit Boards	Plastics	Liquid Crystal Display (LCD)

Ludlum Measurements, Inc. products which have been placed on the market after August 13, 2005 have been labeled with a symbol recognized internationally as the "crossed-out wheelie bin" which notifies the consumer that the product is not to be mixed with unsorted municipal waste when discarding; each material must be separated. The symbol will be placed near the AC receptacle, except for portable equipment where it will be placed on the battery lid.

The symbol appears as such:

Section 10

Parts List

	Reference	Description	Part Number
Model 3 Survey Meter	UNIT	Completely Assembled Model 3 Survey Meter	48-1605
Main Board, Drawing 464 × 204	BOARD	Completely Assembled Main Circuit Board	5464-204
CAPACITORS	C1	47pF, 100V	04-5660
	C2	0.1µF, 35V	04-5755
	C3	0.0047µF, 100V	04-5669
	C4	10pF, 100V	04-5673
	C5	0.01µF, 50V	04-5664
	C6	100pF, 3KV	04-5735
	C7	0.022µF, 50V	04-5667
	C8	1µF, 16V	04-5701
	C9	10µF, 25V	04-5655
	C10	100pF, 100V	04-5661
	C11	68µF, 10V	04-5654
	C12	10µF, 25V	04-5728
	C14	470pF, 100V	04-5668
	C15	220pF, 100V	04-5674
	C16	68µF, 10V	04-5654
	C17	47µF, 10V	04-5666
	C18-C27	0.01µF, 500V	04-5696
	C28	0.001µF, 2KV	04-5703
		or 100pF, 3KV	04-5735
	C29	10µF, 25V	04-5655
	C30-C31	1µF, 16V	04-5701
	C32	470pF, 100V	04-5668

	Reference	Description	Part Number
TRANSISTORS	Q1	MMBT3904LT1	05-5841
	Q2	MMBT4403LT1	05-5842
INTEGRATED CIRCUITS	U1-U3	MAX4542ESA	06-6453
	U4-U5	CMXT3904	05-5888
	U6	CMXT3906	05-5890
	U7	MAX4541ESA	06-6452
	U8	MAX985EUK-T	06-6459
	U9	CD74HC4538M	06-6297
	U10	LMC7111BIM5X	06-6410
	U11	LT1304CS8-5	06-6434
	U12	MIC1557BM5	06-6457
	U13	LT1304CS8	06-6394
DIODES			
	CR1	CMPD2005S	07-6468
	CR2	RECTIFIER CMSH1-40M	07-6411
	CR3-CR7	CMPD2005S	07-6468
	CR9	RECTIFIER CMSH1-40M	07-6411
SWITCHES			
	SW1	D5G0206S-9802	08-6761
	SW2	TP11LTCQE	08-6770
	SW3-SW4	7101SDCQE	08-6781
POTENTIOMETERS / TRIMMERS			
	R33	250K, 64W254, ×100	09-6819
	R34	250K, 64W254, ×10	09-6819
	R35	500K, 64W504, ×1	09-6850
	R36	250K, 64W254, ×0.1	09-6819
	R42	1.2M, 3296W, HV	09-6814
RESISTORS			
	R1-R5	200K, 1/8W, 1%	12-7992
	R6	8.25K, 1/8W, 1%	12-7838
	R7	10K, 1/8W, 1%	12-7839
	R8	2.37K, 1/8W, 1%	12-7861
	R9-R11	10K, 1/8W, 1%	12-7839
	R12	200 Ohm, 1/8W, 1%	12-7846
	R13	10K, 1/8W, 1%	12-7839
	R14	4.75K, 1/8W, 1%	12-7858

	Reference	Description	Part Number
	R15	200K, 1/8W, 1%	12-7992
	R16	10K, 1/8W, 1%	12-7839
	R17	1K, 1/8W, 1%	12-7832
	R18	4.75K, 1/8W, 1%	12-7858
	R19	2K, 1/8W, 1%	12-7926
	R20-R21	100K, 1/8W, 1%	12-7834
	R22	1M, 1/8W, 1%	12-7844
	R23	2.49K, 1/8W, 1%	12-7999
	R24	14.7K, 1/8W, 1%	12-7068
	R25	200K, 1/4W, 1%	12-7992
	R26	100K, 1/4W, 1%	12-7834
	R27	68.1K, 1/8W, 1%	12-7881
	R28	100K, 1/8W, 1%	12-7834
	R29	1K, 1/8W, 1%	12-7832
	R30	100K, 1/8W, 1%	12-7834
	R31	475K, 1/8W, 1%	12-7859
	R32	100K, 1/8W, 1%	12-7834
	R37	100K, 1/8W, 1%	12-7834
	R38	2.2M, 1/8W, 1%	12-7986
	R39	500M, 3KV, 2%	12-7031
	R40	402K, 1/8W, 1%	12-7888
	R44	1K, 1/4W, 1%	12-7832
CONNECTORS			
	P1	640456-5 - MTA100	13-8057
	P2	640456-6 - MTA100 (installed as required)	13-8095
	P3	640456-2 - MTA100	13-8073
INDUCTOR	L1	22 μH	21-9808
TRANSFORMER	T1	31032R	21-9925

Wiring Diagram, Drawing 464 × 212

CONNECTORS	J1	MTA100×5, MAIN BOARD 5464-204	13-8140
	J2	OPTIONAL (M3 overload) MTA100×6, 5464-204	13-8171
	J3	MTA100×2, MAIN BOARD 5464-204	13-8178

	Reference	Description	Part Number
AUDIO			
	DS1	UNIMORPH TEC3526-PU	21-9251
BATTERIES			
	B1-B2	"D" DURACELL BATTERY	21-9313
MISCELLANEOUS			
	*	PORTABLE BATTERY CONTACT ASSEMBLY	2001-042
	*	MODEL 3 CASTING	7464-219
	*	MODEL 3 MAIN HOUSING	8464-035
	*	PORTABLE CAN ASSEMBLY (MTA)	4363-441
	*	PORTABLE KNOB	08-6613
	M1	METER ASSEMBLY METER BEZEL W/GLASS W/O SCREWS	4364-188
	*	METER MOVEMENT (1mA)	15-8030
	*	PORTABLE METER FACE	7363-136
	*	HARNESS-PORT CAN WIRES	8363-462
	*	BATTERY LID W/O LATCH KIT MODEL 3	2363-191
	*	PORTABLE LATCH KIT W/O BATTERY LID	4363-349
	*	PORTABLE HANDLE(GRIP) W/SCREWS	4363-139
	*	PORTHANDLE FOR CLIP W/SCREWS	4363-203
	*	REPLACEMENT CABLE (STD 39")	40-1004
	*	CLIP (44-3 TYPE) W/SCREWS	4002-026-01
	*	CLIP (44-6 TYPE) W/SCREWS	4010-007-01
	*	LABEL-M3 CALIBRATION	2310602
	*	LABEL-M3 BATTERY LID	2310601
	*	LABEL-M3 FACEPLATE	2310603

Section 11

Drawings and Diagrams

MAIN CIRCUIT BOARD, Drawing 464 × 204 (3 sheets)

MAIN CIRCUIT BOARD LAYOUT, Drawing 464 × 205 (2 sheets)

CHASSIS WIRING DIAGRAM, Drawing 464 × 212

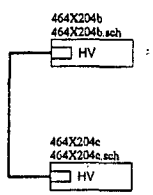

LUDLUM MEASUREMENTS, INC.
PO Box 810
501 Oak Street
Sweetwater, Texas 79556
U.S.A. 1-800-622-0828

Drawn: SA	02/08/07	Title: MAIN BOARD			
Design: DL	02/08/07	Model: M3			
Check:		Board#: 5464-204			
Approve:		Sheet: 1 of 3		Series	Sheet
14:47:19	8-Feb-2007	Rev: 2		464	204
464x204a.sch					

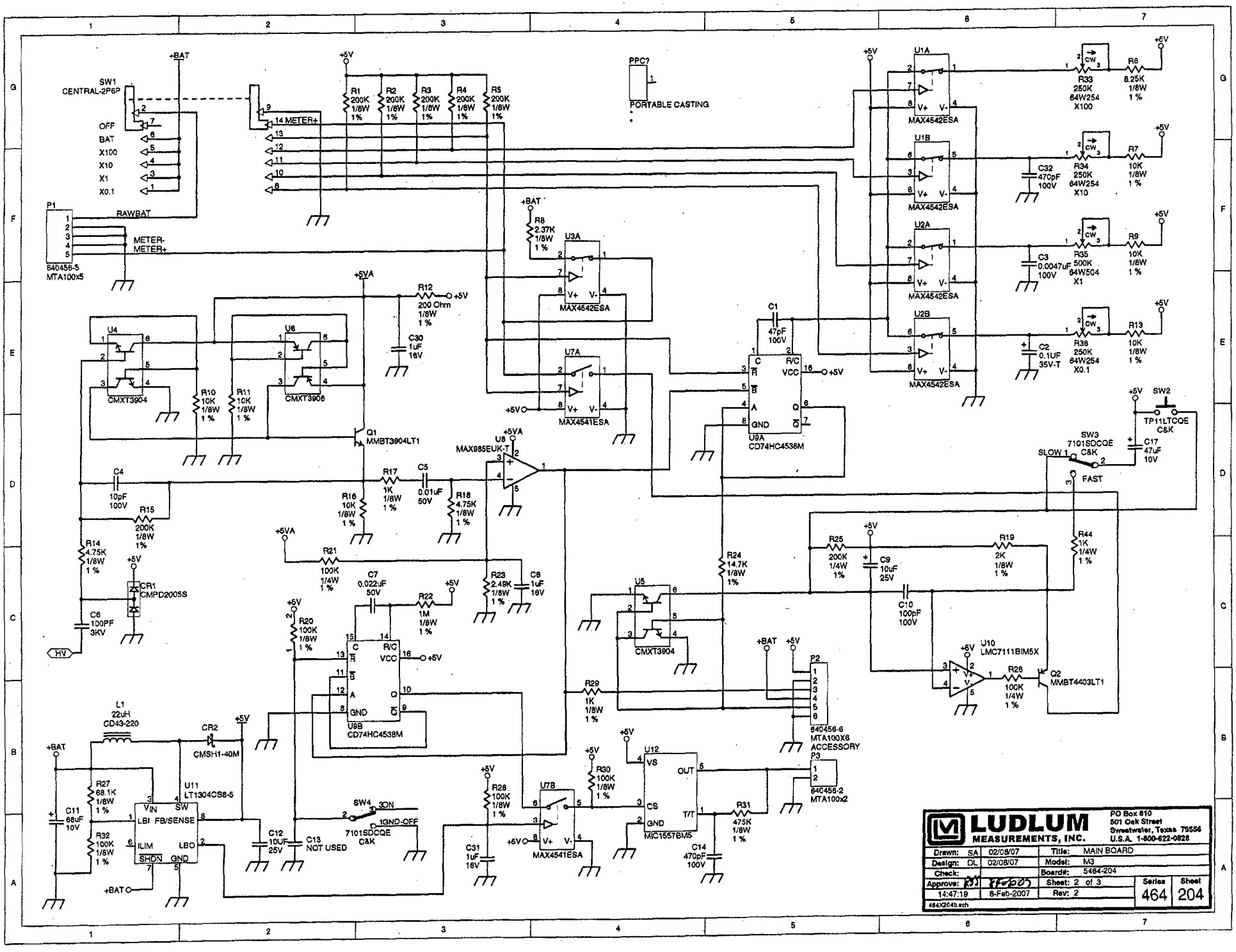
SW1
CENTRAL-2P6P
OFF
BAT
X100
X10
X1
X0.1
+BAT
+5V
14 METER+
R1 200K 1/8W 1%
R2 200K 1/8W 1%
R3 200K 1/8W 1%
R4 200K 1/8W 1%
R5 200K 1/8W 1%
PPC?
PORTABLE CASTING
P1
RAWBAT
METER-
METER+
640456-5
MTA100x5
U1A
U1B
U2A
U2B
MAX4542ESA
R33 250K 64W254 X100
R34 250K 64W254 X10
R35 500K 64W504 X1
R36 250K 64W254 X0.1
R6 8.25K 1/8W 1%
R7 10K 1/8W 1%
R9 10K 1/8W 1%
R13 10K 1/8W 1%
C32 470pF 100V
C3 0.0047uF 100V
C2 0.1UF 35V-T
R8 2.37K 1/8W 1%
U3A
U7A
MAX4541ESA
+5VA
R12 200 Ohm 1/8W 1%
C30 1uF 16V
U4
U6
CMXT3904
CMXT3906
R10 10K 1/8W 1%
R11 10K 1/8W 1%
Q1 MMBT3904LT1
C1 47pF 100V
U9A CD74HC4538M
U8 MAX985EUK-T
C4 10pF 100V
R15 200K 1/8W 1%
R14 4.75K 1/8W 1%
CR1 CMPD2005S
C6 100PF 3KV
HV
R16 10K 1/8W 1%
R17 1K 1/8W 1%
C5 0.01uF 50V
R18 4.75K 1/8W 1%
R21 100K 1/4W 1%
C7 0.022uF 50V
R22 1M 1/8W 1%
R20 100K 1/8W 1%
R23 2.49K 1/8W 1%
C8 1uF 16V
U9B CD74HC4538M
L1 22uH CD43-220
CR2 CMSH1-40M
U11 LT1304CS8-5
R27 68.1K 1/8W 1%
R32 100K 1/8W 1%
C11 68uF 10V
C12 10UF 25V
C13 NOT USED
SW4 3ON 1GND-OFF
7101SDCQE C&K
R28 100K 1/8W 1%
C31 1uF 16V
U7B
MAX4541ESA
R30 100K 1/8W 1%
U12 MIC1557BM5
R31 475K 1/8W 1%
C14 470pF 100V
R24 14.7K 1/8W 1%
U5
CMXT3904
R29 1K 1/8W 1%
P2
640456-6
MTA100X6
ACCESSORY
P3
640456-2
MTA100x2
R25 200K 1/4W 1%
C9 10uF 25V
R19 2K 1/8W 1%
R44 1K 1/4W 1%
C10 100pF 100V
U10 LMC7111BIM5X
R26 100K 1/4W 1%
Q2 MMBT4403LT1
SW2 TP11LTCQE C&K
C17 47uF 10V
SW3 7101SDCQE C&K
SLOW
FAST
LUDLUM MEASUREMENTS, INC.
PO Box 810
501 Oak Street
Sweetwater, Texas 79556
U.S.A. 1-800-622-0828
Drawn: SA 02/08/07
Design: DL 02/08/07
Check:
Approve:
14:47:19 8-Feb-2007
Title: MAIN BOARD
Model: M3
Board#: 5464-204
Sheet: 2 of 3
Rev: 2
Series 464
Sheet 204
464X204b.sch

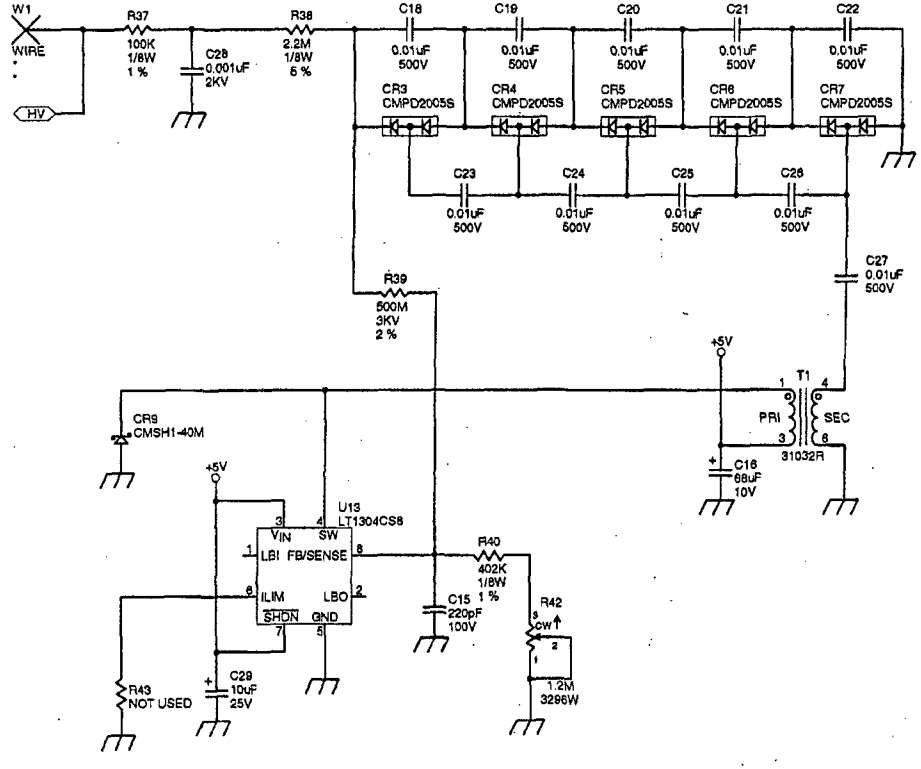

LUDLUM MEASUREMENTS, INC.			PO Box 510 501 Oak Street Sweetwater, Texas 79556 U.S.A. 1-800-622-0828	
Drawn: SA	02/08/07	Title: MAIN BOARD		
Design: DL	02/08/07	Model: M3		
Check:		Board#: 5484-204		
Approve: RW	8 Feb 07	Sheet: 3 of 3	Series 464	Sheet 204
14:47:19	8-Feb-2007	Rev: 2		
464X204c.sch				

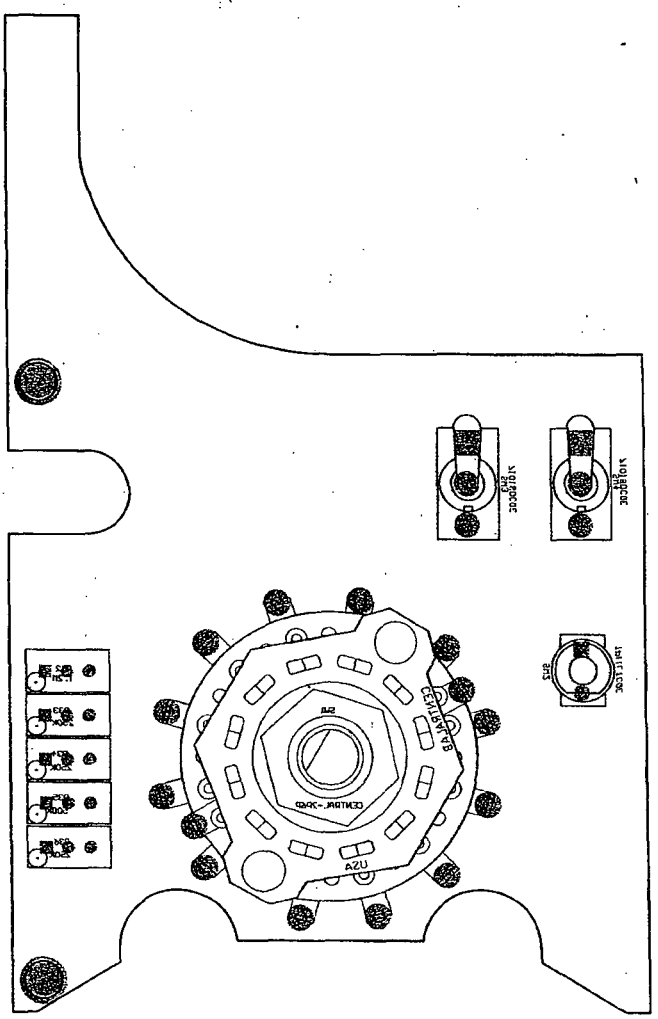

Drawn: SA	02/08/07	Title: MAIN BOARD			
Design: DL	02/08/07				
Check:		Model: M3			
Approve: RJS	8Feb07	Board#: 5464–204			
Layer:		Rev: 2	Series	Sheet	
	14:47:02 8–Feb–2007	SCALE: 1.21	464	205	

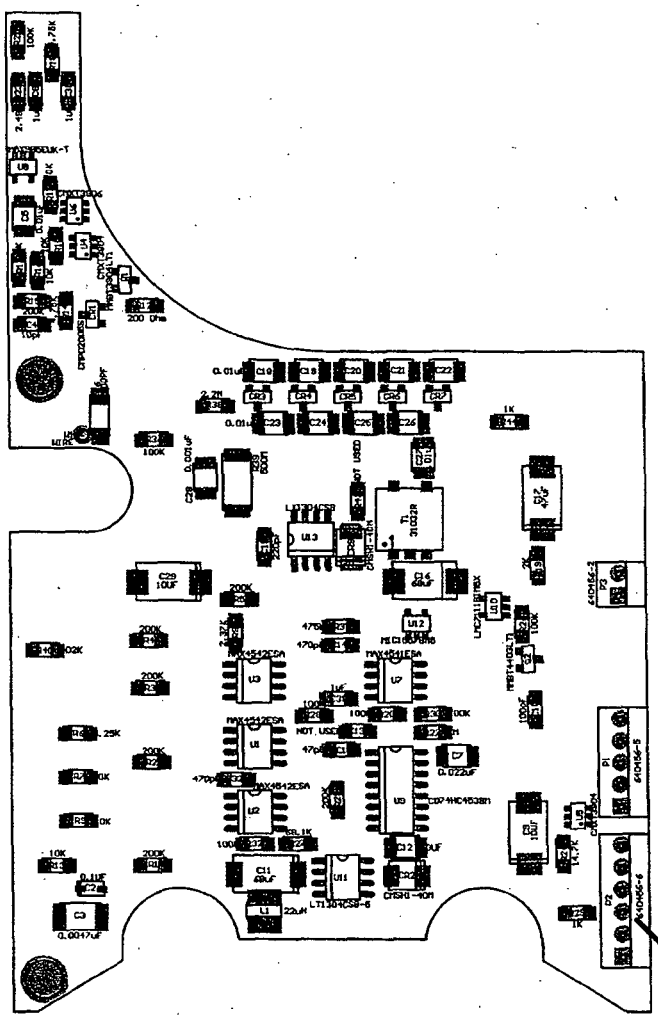

INSTALL AS REQUIRED

Drawn: SA	02/08/07	Title: MAIN BOARD			
Design: DL	02/08/07				
Check:		Model: M3			
Approve: RSS	8Feb07	Board#: 5464-204			
Layer:		Rev: 2	Series	Sheet	
	14:47:01 8-Feb-2007	SCALE: 1.21	464	205	

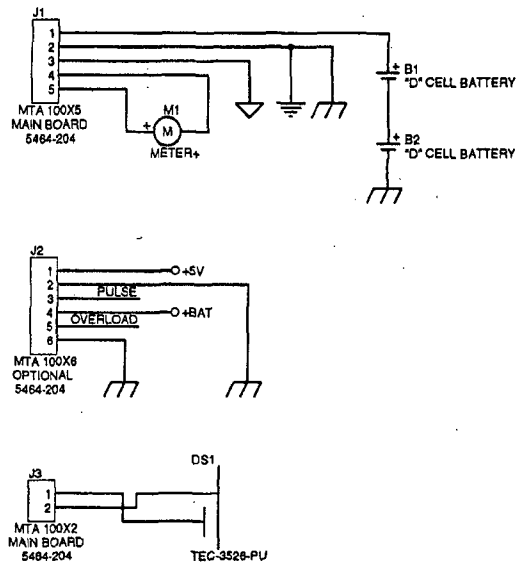

LUDLUM MEASUREMENTS, INC.		PO Box 810 501 Oak Street Sweetwater, Texas 79556 U.S.A. 1-800-622-0828	
Drawn: JK	01-JUN-094	Title: WIRING DIAGRAM	
Design: RSS	01-JUN-04	Model: M3	
		Board#: 5464-204	
Approve: JWS	01-Jun-04	Sheet: 1 of 1	Series 464 / Sheet 212
08:36:52	1-Jun-2004	Rev:	
464X212.wd			

LUDLUM MODEL 177
ALARM RATEMETER

November 2005

Serial Number 121166 and Succeeding

Serial Numbers

LUDLUM MEASUREMENTS, INC.
501 OAK STREET, P.O. BOX 810
SWEETWATER, TEXAS 79556
325-235-5494, FAX: 325-235-4672

REV #	ALTERATIONS	DATE	BY
1	VALID	8/8/91	BK
2	ADDED SYMBOLS	12/7/05	CMC

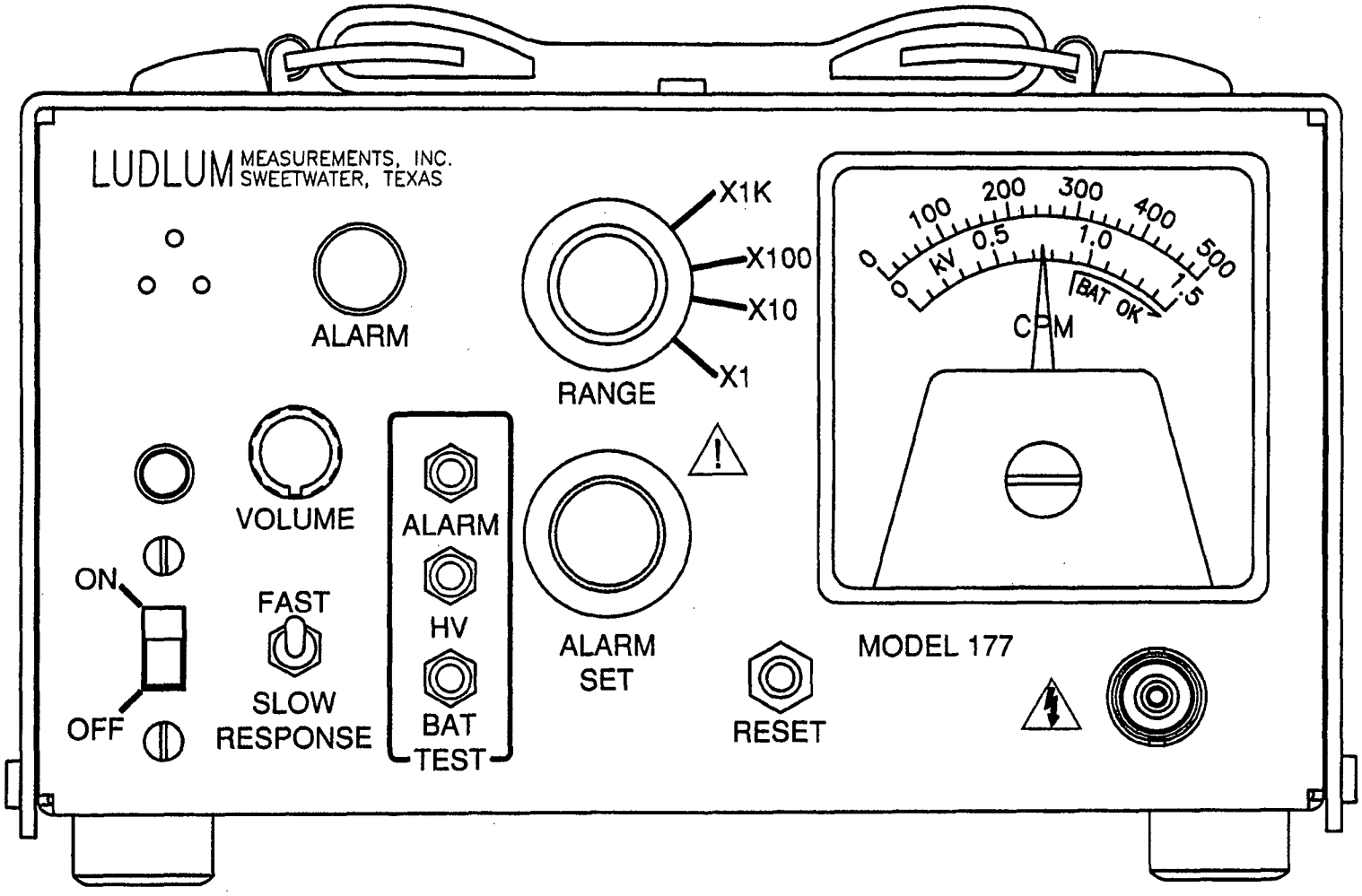

DWN	DATE	CHK	DATE	APP	DATE
CMC	12-7-05				5 Dec 05

DWG NUM: 4347-186 SCALE: FULL ☒ OTHER

TITLE: M 177 ALARM RATEMETER

LUDLUM MEASUREMENTS, INC.
501 OAK STREET
SWEETWATER, TEXAS 79556

SERIES: 347 SHEET: 26

REV #	ALTERATIONS	DATE	BY
1	VALID	8/8/91	BK
2	ADDED SYMBOLS	12/7/05	CMC

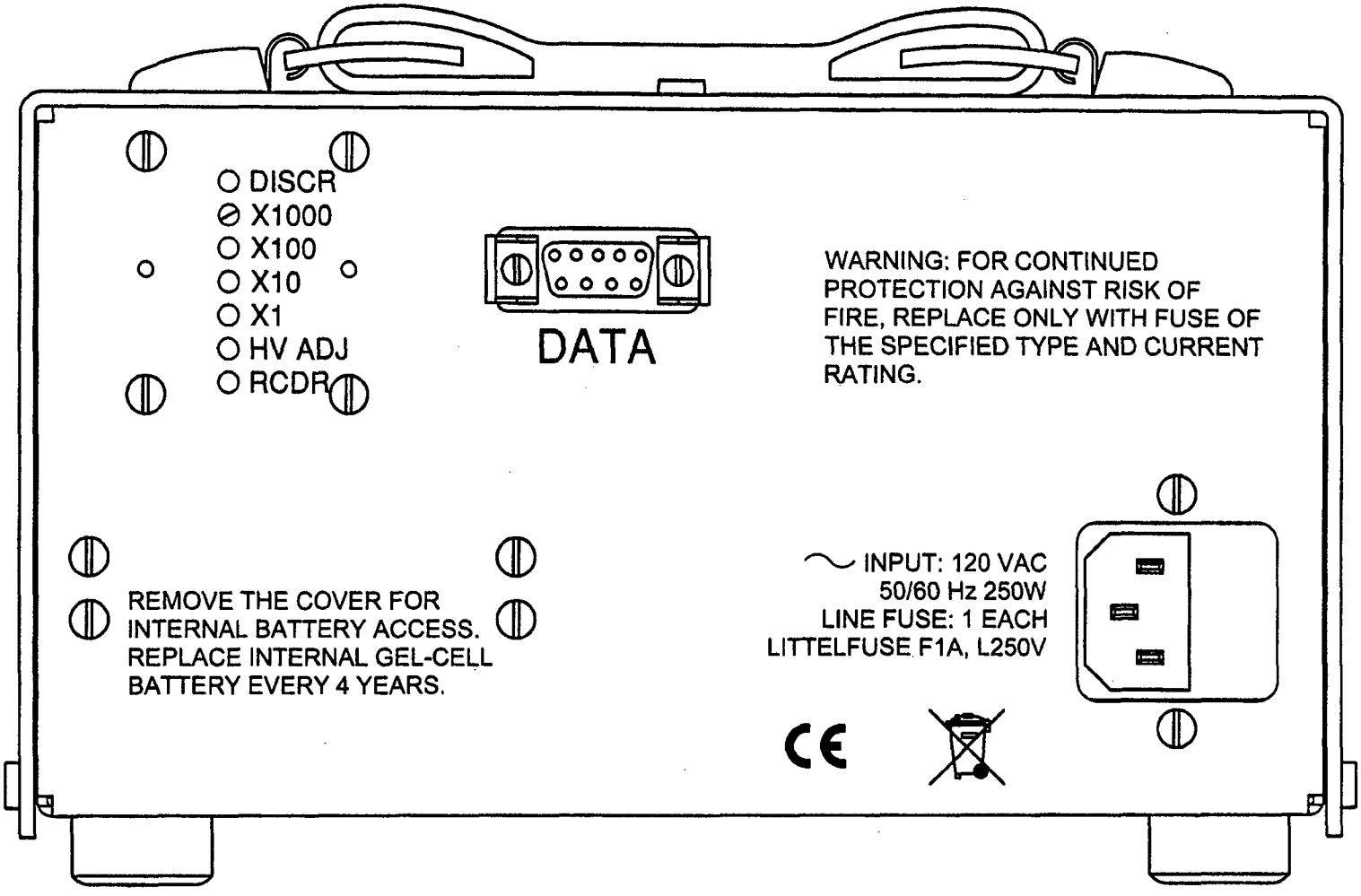

DWN	DATE	CHK	DATE	APP	DATE
CMC	12/7/05			RSF	8 Dec 05

DWG NUM: 4347-186 SCALE: FULL OTHER ☒

TITLE M 177 ALARM RATEMETER

LUDLUM MEASUREMENTS, INC. 501 OAK STREET SWEETWATER, TEXAS 79556

SERIES 347 SHEET 26A

Table of Contents

Introduction **1**

Getting Started **2**

Preparing the Instrument for Use **2-1**

Operating the Instrument **2-1**

Specifications **3**

Description of Controls and Functions **4**

Front Panel **4-1**

Back Panel **4-2**

CAL Control **4-3**

Internal Controls (Overhaul Only) **4-4**

Safety Considerations **5**

Environmental Conditions for Normal Use **5-1**

Cleaning Instructions and Precautions **5-1**

Warning Markings and Symbols **5-2**

Replacement of Main Fuse **5-3**

Calibration and Maintenance **6**

Calibration **6-1**

Establishing an Operating Point **6-2**

Maintenance **6-3**

Troubleshooting **7**

Troubleshooting Electronics that utilize a G-M, or Scintillation Detector **7-1**

Troubleshooting G-M Detectors **7-2**

Troubleshooting Scintillators **7-3**

Technical Theory of Operation **8**

Amplifier **8-1**

Discriminator **8-1**

Digital Analog Conversion **8-1**

Time Constant **8-2**

Alarm 8-2
Reset 8-2
Audio 8-2
High Voltage (HV) 8-3
Low Voltage 8-3
Battery Charge 8-3
High Voltage Test 8-3
Alarm Set Voltage 8-3
Battery Test Voltage 8-4

Recycling **9**

Parts List ***10***
Model 177 Alarm Ratemeter 10-1
Main Board, Drawing 347 × 227 10-1
Calibration Board, Drawing 347 × 132 10-4
Wiring Diagram, Drawing 347 × 230 10-5

Drawings and Diagrams ***11***

Section 1

Introduction

The Ludlum Model 177 Alarm Ratemeter may be used with G-M (Geiger-Mueller) or scintillation detectors for contamination monitoring, surveying and area monitoring. The unit provides four ranges (in decades) of the analog meter, enabling measurement from 0 to 500,000 counts per minute (CPM) on the standard meter dial; others are available. Detector high voltage is adjustable from 200 to 1500 volts.

The unit incorporates an adjustable alarm set point. The alarm setting may be checked by depressing the front panel TEST switch. Audible and visual enunciators are triggered when the meter reading rises above the alarm set point. Accessory outputs include: Unbuffered Output, Supply Voltage, Negative Pulse Output, Recorder and Alarm Sink for Remote Relay. The unit may be operated from an internal rechargeable battery or by line AC power.

Section 2

Getting Started

The Ludlum Model 177 Alarm Ratemeter is designed for use with G-M (Geiger Mueller) or scintillation detectors which operate from 200 to 1500 volts. Typical applications include contamination monitoring, surveying and area monitoring.

Preparing the Instrument for Use

Turn the power switch to the ON position. Depress the BAT TEST button. Check that the meter reads above the BAT TEST indication. If the battery does not check, the instrument will operate on AC line power only. The battery may be trickle-charged from line power or fast-charged from an external source. Connect the instrument to line power if necessary.

Select the operating voltage. This voltage is set by the manufacturer for the detector shipped with the instrument and recorded on the Certificate of Calibration. For other detector/instrument setups, consult the detector manual or manufacturer. Then adjust the HV potentiometer accordingly.

Note:

Most G-M detectors will operate at 900 volts. However, some smaller G-M tubes operate at lower voltages.

Operating the Instrument

Connect a detector to the instrument. Obtain a meter reading from a check source or calibrated source, if available. Remove the source.

Set the instrument to the appropriate range with the RANGE selector switch.

If the alarm point is not already set, press the ALARM TEST switch and adjust ALARM SET for the desired alarm point.

Note:

The meter displays the alarm set point when the ALARM TEST switch is depressed. Recheck the set point after locking the ALARM SET control.

Increase the meter count to exceed the alarm threshold. Both the alarm lamp and audible alarm signal should activate.

Depress the RESET button. The meter needle should drive to zero and the alarm circuit should de-energize, shutting off both the visual and audible alarms.

Depress the HV TEST button and ensure that the high voltage is properly set.

Proceed with use.

Section 3

Specifications

Power: 120 VAC 50/60 Hz 250W line power and 6 volt Gell-Cell (sealed lead-acid) battery. Typical battery life of approximately 50 hours in a non-alarming condition with fully charged battery.

Fuse: 1 amp, LITTLEFUSE F1A L250V.

Response Time: Two positions: fast 2.2 seconds; slow 22 seconds for 90% of full scale reading.

Linearity: Within plus or minus 5% of full scale. Typically plus or minus 2% of full scale reading when measured with an electronic pulse generator.

Battery Dependence: Meter readings vary less than 3% within battery check limits.

High Voltage: Variable from 200 to 1500 volts.

Input Sensitivity: Adjustable from 10 through 100 millivolts.

Connector: Series "C".

Audio: Unimorph speaker with volume control located on the front panel.

Meter: 1 mA, size: 2.5" × 2.5," DC movement.

Meter Scale: 0-500 CPM; 0-1.5 kV; BAT TEST.

Ranges: Four ranges of X1 through X1K.

Recorder Output: Adjustable from 0 to 1.25 volts at 1 mA.

Alarm Output: Current sink to 200 mA DC. Open circuit voltage not to exceed 50 Vdc.

Unbuffered Output: May be used to externally add to or subtract from the meter reading.

Alarm Range: Adjustable from 0 through 150% of full scale.

Alarm Output: Visual indicator (lamp), audible tone and remote current sink.

Alarm Control: Factory set to latching. Non-latching alarm available through the removal of main board resistor R116.

Finish: Computer-beige, polyurethane enamel.

Size: 6" (15.24 cm) Depth × 8" (20.32 cm) W × 5"(12.7 cm) H, excluding handle.

Weight: 4.2 lbs. (1.9 kg) with battery.

Section 4

Description of Controls and Functions

Front Panel

Power ON-OFF Switch: Provides line power of 120 VAC 50/60 Hz to the instrument and trickle-charges the standby battery. In case of line power failure, the battery automatically comes on-line to power the instrument. The battery will provide up to 50 hours of operation.

> **Note:**
>
> To recharge the battery, the ON-OFF switch must be in the ON position.

Power-on Lamp: A red lamp that comes on when power is supplied to the instrument.

VOLUME Control: Varies the volume of the audio output through the unimorph speaker. This control has minimal effect on the audio when the alarm is activated.

Audio Speaker: A unimorph speaker, located behind the front panel.

ALARM Lamp: A red lamp that comes on when the alarm threshold has been exceeded. The lamp will remain on (unless the alarm is configured to "non-latching") until the reset button is depressed, driving the meter needle below the alarm threshold.

RANGE Selector Switch: A four-position switch providing range multipliers of X1K, X100, X10, and X1. With a scale (meter face) of 0-500 CPM, the full range of the instrument is 0 to 500,000 CPM .

Ratemeter: A four-decade linear meter with ranges of 0-500, 0-5000, 0-50,000, 0-500,000 CPM. Other meter faces are available depending on the application. Readout is on a 2.5-inch scale panel meter. A separate scale is provided for battery check and high voltage readout.

Connector: Series "C" connector. (Series BNC and MHV connectors are also available). The connector is provided on the front of the instrument for connection to a detector.

RESET Button: This button, when depressed, provides a rapid means of driving the meter needle to zero.

FAST-SLOW RESPONSE Toggle Switch: When in the FAST position, this switch provides 90% of full-scale meter deflection in 2.2 seconds. With this switch in the SLOW position, 90% of full-scale meter deflection takes 22 seconds. If quick needle response and maximum deviation are desired, the FAST position should be used. For slow response and damped meter movement, the SLOW position should be used.

BAT TEST Button: When this button is depressed, the meter displays the battery status. A sufficiently charged battery is indicated when the meter needle is on or within the BAT TEST range.

HV TEST Button: When this button is depressed, the meter displays the detector high voltage.

ALARM TEST Button: When this button is depressed, the meter displays the alarm calibration set point.

ALARM SET: Used to adjust the alarm calibration set point. Note the locking knob below the control.

Back Panel

120V AC plug: Provides power to the instrument from a 120 volts AC, 50/60 Hz, 250W line.

LINE FUSE: Provides line protection with a 1 amp fuse- LITTLEFUSE F1A L250V.

Data: A 9-pin type "D" data plug with connections as follows:

> **PIN 1:** Battery terminal. This is a direct connection and does not go through the front panel ON-OFF switch. Use to parallel battery or use external charger.
>
> **PIN 2:** Unregulated supply from approximately 6 volts, battery only to 9.5 volts with AC power on. Limit current drain to 50 milliamperes.

PIN 3: Instrument common (Ground).

PIN 4: Alarm sink. The open collector of a 2N7002L. Limits sink current to 200 milliamperes with open circuit voltage limited to a range of 0 to +50 volts. Unit conducts when in alarm.

PIN 5: Pulse Out. A negative pulse connected to the discriminator output through a 0.001 uF capacitor. Typically. -4.0 volts.

PIN 6: Unbuffered output ties directly to the meter drive circuit. (R124/C122). Approximately 1.3 volts at full scale. Using an external constant current sink will allow background subtract. At full-scale, draws out approximately 3.3 microamperes to zero the meter.

PIN 7: Recorder output, adjustable from 0 to 1.0 volts at 1 milliamperes.

PIN 8 and PIN 9: Spares

CAL Control

Remove the calibration (cal) cover plate to access the following calibration potentiometers:

DISCR: Discrimination Control. For pancake-type G-M detectors (ie. Model 44-9), adjust DISCR for 80 ± 10 millivolts. All other G-M detectors and scintillators should be set to 35 ± 10 millivolts. If a lower operating voltage for a scintillator is desired, adjust the discriminator to 10 ± 2 millivolts. This control has an adjustable range of 10 to 100 millivolts. A Ludlum Model 500 Pulser may be used to determine the discrimination level.

Calibration Controls: X1K through X1 calibration controls used to calibrate ranges.

HV ADJ: Used to set detector operating voltage.

RCDR: Used to calibrate the recorder output.

Internal Controls (Overhaul Only)

The following controls are located internally, on the main circuit board:

BAT C: Used to adjust charge voltage to 6.825 volts.

BAT T: Used to adjust meter test voltage reading to 5.97 volts at the BAT OK line.

HV T: Used to adjust the high voltage test reading to correspond with the actual high voltage output.

Section 5

Safety Considerations

Environmental Conditions for Normal Use

Indoor use only

No maximum altitude

Temperature range of –20°C to 50°C (–4°F to 122°F)

Maximum relative humidity of less then 95% (non-condensing)

Mains supply voltage range of 95-135 VAC (178-240 VAC available), 50/60Hz single phase (less than 100mA)

Maximum transient voltage of 1500 VAC

Installation Category II (Overvoltage Category as defined by IEC 1010-1)

Pollution Degree 1 (as defined by IEC 664).

Cleaning Instructions and Precautions

The Model 177 Alarm Ratemeter may be cleaned externally with a damp cloth, using only water as the wetting agent. Do not immerse the instrument in any liquid. Observe the following precautions when cleaning:

1. Turn the instrument OFF and disconnect the instrument power cord.

2. Allow the instrument to sit for 1 minute before cleaning.

Warning Markings and Symbols

Caution!

The operator or responsible body is cautioned that the protection provided by the equipment may be impaired if the equipment is used in a manner not specified by Ludlum Measurements, Inc.

The Model 177 Alarm Ratemeter is marked with the following symbols:

ALTERNATING CURRENT (AC) (IEC 417, No. 5032) - designates an input receptacle that accommodates a power cord intended for connection to AC voltages. This symbol appears on the back panel.

PROTECTIVE CONDUCTOR TERMINAL (per IEC 417, No. 5019) – designates the central grounding point for the safety ground. This symbol is visible inside the chassis.

CAUTION (per ISO 3864, No. B.3.1) – designates hazardous live voltage and risk of electric shock. During normal use, internal components are hazardous live. This instrument must be isolated or disconnected from the hazardous live voltage before accessing the internal components. This symbol appears on the front panel. **Note the following precautions:**

Warning!

The operator is strongly cautioned to take the following precautions to avoid contact with internal hazardous live parts that are accessible using a tool:

1. Turn the instrument power OFF and disconnect the power cord.
2. Allow the instrument to sit for 1 minute before accessing internal components.

CAUTION, RISK OF ELECTRIC SHOCK (per ISO 3864, No. B.3.6) – designates a terminal (connector) that allows connection to a voltage exceeding 1 kV. Contact with the subject connector while the instrument is on or shortly after turning off may result in electric shock. This symbol appears on the front panel.

The "**crossed-out wheelie bin**" symbol notifies the consumer that the product is not to be mixed with unsorted municipal waste when discarding; each material must be separated. The symbol is placed near the AC receptacle. See section 9, "Recycling" for further information.

Replacement of Main Fuse (Back Panel)

Warning!

For continued protection against risk of fire, replace only with fuse of the specified type and current rating!

Section 6

Calibration and Maintenance

Calibration

Note:

Local procedures may supersede the following.

Connect the instrument to a Ludlum Model 500 Pulser (Pulse Generator) or equivalent.

The ratemeter may be calibrated by adjusting the calibration controls labeled 1, 10, 100 and 1K. Starting with the 1000 range, apply 400,000 CPM from Pulser. Adjust the 1K calibration control for a meter reading of 400. Drop the Pulser pulse rate to 100,000 CPM and ensure a meter reading of 100 ± 10.

Repeat this procedure for the lower scales with scaled pulse rates.

For pancake-type G-M detectors (ie. Model 44-9), adjust DISCR for 80 ± 10 millivolts. All other G-M detectors and scintillators should be set to 35 ± 10 millivolts. To lower the scintillation detector operating voltage, decrease the input sensitivity to 10 ± 2 millivolts. Adjustment is made by setting the pulse generator amplitude to the desired pulse height. Adjust DISCR until the meter reaches 75% of the generated incoming count rate.

Connect the Model 177 to an external voltmeter. Adjust the rear panel HV control for a reading of 1000 Vdc on the voltmeter. Depress HV TEST. On the main board, adjust HV for a meter reading of 1.0 kV. Using the rear panel HV control, vary the high voltage output from 500 to 1500 Vdc and ensure that the high voltage meter reads within 10% of the Model 177 meter reading.

Adjust RCDR (recorder output) for 1 volt output (equivalent to full scale).

Adjust ALARM SET to the desired set point.

Establishing an Operating Point

The operating point for the instrument and detectors is established by setting the detector voltage and instrument sensitivity (HV and DIS). The proper selection of this point is the key to instrument performance.

Efficiency, background sensitivity and noise are fixed by the physical makeup of the given detector and rarely vary from unit to unit. However, the selection of the operating point makes a significant difference in the contribution of these three sources of count.

The purpose of setting the operating point is to establish the system gain so that the desirable signal pulses (including background) are above the discrimination level, and the unwanted pulses from noise are below the discrimination level. The pulses above the discrimination level are counted by the instrument, while those below are not.

The total system gain is controlled by adjusting the instrument gain or the high voltage. Voltage affects the output of the detector. Amplifier gain is controlled by the DIS (discriminator) control.

In special cases of G-M detectors, a minimum voltage must be applied to establish the Geiger-Mueller characteristic. Further changes in gain will not affect this type of detector.

The operating point for each detector is set at a compromise point between sensitivity, stability and background contribution. These operating points are best for general monitoring. In application, these arbitrarily selected points may not be a better operating point. The following guidelines are presented:

G-M Detectors: The output pulse height of the G-M detector is not proportional to the energy of the detected radiation. Adjusting DIS will have minimal effect on the observed count rate unless the setting is so low that the instrument double pulses.

For most G-M detectors, set DIS for 30-40 millivolts and adjust HV to the G-M tube recommended high voltage. Most G-M detectors operate at 900 volts, however, some miniature detectors operate at 400-600 volts. If a recommended setting is unavailable, run a plateau of HV setting vs. count rate. Then set the high voltage on the low side of "center."

Scintillators: Set DIS for 10 millivolts. Carefully increase HV until the instrument plateaus on the background count. This provides the most stable operating point for the detector.

Maintenance

Instrument maintenance consists of keeping the instrument clean and periodically checking the battery and calibration.

An instrument operational check should be performed prior to each use by exposing the detector to a known source and confirming the proper reading on each scale.

Recalibration should be accomplished after any maintenance or adjustment has been performed on the instrument. Ludlum Measurements recommends recalibration at intervals no greater than one year. Local regulations may have precedence over this recommendation.

To maintain the life of the battery, it is recommended that the instrument be constantly connected to line power with the power switch in the ON position, even when the instrument is not in use. This will keep the internal battery fully charged.

When the instrument is used without line power, adequate charge time must be allowed for the internal battery to recharge. If possible, leave the instrument on with line power applied overnight and weekends. At a minimum, allow one hour of charge time for each hour of use. If the battery is inadvertently allowed to fully discharge, and is left in that state, constant charging for 500 hours (3 weeks) may be required for battery recovery.

Note:

The ON-OFF switch must be in the ON position to charge the batteries. If the unit is out of service for extended periods of time, charge the battery every 6 months.

It is recommended that the internal GEL-CELL battery be replaced every 4 years.

Section 7

Troubleshooting

Occasionally, you may encounter problems with your LMI instrument or detector that may be repaired or resolved in the field, saving turnaround time and expense in returning the instrument to us for repair. Toward that end, LMI electronics technicians offer the following tips for troubleshooting the most common problems. Where several steps are given, perform them in order until the problem is corrected. Keep in mind that with this instrument, the most common problems encountered are: 1. detector cables; 2: sticky meters.

Note that the first troubleshooting tip is for determining whether the problem is with the electronics or with the detector. A Ludlum Model 500 Pulser is invaluable at this point, because of its ability to simultaneously check high voltage, input sensitivity or threshold, and the electronics for proper counting.

We hope these tips will prove to be helpful. As always, please call if you encounter difficulty in resolving a problem or if you have any questions.

Troubleshooting Electronics that utilize a G-M, or Scintillation Detector

SYMPTOM	POSSIBLE SOLUTION
No power (or meter does not reach BAT TEST or BAT OK mark)	1. Check battery and charge if necessary. 2. Check for loose or broken wires, especially between the main board and the calibration board.

SYMPTOM	POSSIBLE SOLUTION
Nonlinear Readings	1. Check the high voltage (HV) by pressing the HV TEST button. If a Multimeter is used to check the HV, ensure that one with high impedance is used; as a standard Multimeter could be damaged in this process. 2. Check for noise in the detector cable by disconnecting the detector and placing the instrument on the lowest range setting. Wiggle the cable and observe the reading for significant changes. 3. Check for "sticky" meter movement. Does the reading change when you tap the meter? Does the meter needle "stick" at any spot? 4. Check the "meter zero." Turn the power OFF. The meter should come to rest on "0".
Meter goes full-scale or "Pegs Out"	1. Replace the detector cable to see if it has failed, causing excess noise. 2. Check the HV and, if possible, the input threshold for proper setting. 3. Check for loose wires, especially between the main board and the calibration board.

Troubleshooting G-M Detectors

1. If the tube has a thin mica window, check for window breakage. If damage is evident, the tube must be replaced.

2. Check the HV. For most G-M tubes, the voltage is normally 900 Vdc, or 460-550 Vdc for "peanut" tubes (Ludlum Model 133 series).

3. If the input sensitivity is too low, the user could see some double-pulsing. See Page 4-3, "**DISCR**" for further information on sensitivity/discrimination control.

4. Wires to the tube may be broken or the crimped connector could have a loose wire.

Troubleshooting Scintillators

1. Alpha or Alpha/Beta scintillators are prone to light leaks. They can be tested for this problem in a dark room or with a bright light. If a light leak is determined, changing the Mylar window assembly will usually fix the problem.

Note:

When replacing the window, make sure to use a window made with the same thickness Mylar and the same number of layers as the original window.

2. Verify that the HV and input sensitivity are correct. Alpha and gamma scintillators typically operate from 10-35 mV. High voltage varies with photomultiplier tubes (PMT), from as low as 600 Vdc, to as high as 1400 Vdc.

3. On a gamma scintillator, visually inspect the crystal for breakage or humidity leakage. Water inside the crystal will turn it yellow and gradually degrade performance.

4. Check the PMT to see if the photocathode still exists. If the end of the PMT is clear (not brownish), this indicates a loss of vacuum which will render the PMT useless.

Section 8

Technical Theory of Operation

Amplifier

Negative detector pulses are coupled through C124 to emitter follower Pin U121. R127 protects the input from inadvertent H.V. shorts. R129 couples the detector to the high voltage supply.

Negative pulses from emitter, Pin 2 of U121, are coupled through C121 to amplifier Pin 5 through Pin 7 of U121. This amplifier is self-biased and provides gain in proportion to R029 divided by R0210. Transistor (pins 4-5-6, U121) provides amplification. Pins 12 and 15 of U121 are coupled as a current mirror to provide a load for Pin 6 of U121. The output self-bias to 2 Vbe (approximately 1.4 volts) at Pin 7 of U121. This provides just enough bias current through Pin 6 of U121 to conduct all of the current from the current mirror.

Positive pulses from Pin 7 of U121 are coupled to the discriminator.

Discriminator

Comparator U021 provides discrimination. The discriminator is set by the DIS (Discriminator) control located on the rear panel, coupled to Pin 5 of U021. Negative pulses (approx. 5 volts) at Pin 7 of U021 are coupled to Pin 5 of U011 for meter drive and Pin 11 of U011 for audio.

Digital Analog Conversion

Pin 7 of U021 is connected to the dual univibrator, U011. For each low pulse for Pin 7 of U021, Pin 6 of U011 goes high. The pulse of Pin 6 of U011 is typically 5.0 volts for 6 milliseconds on X1 to 6 microseconds on X1k. This pulse is connected to the constant current drive U012. The pulse width control (R3-C2 on calibration board) is utilized for calibration adjustment. Controls R4 through R6 allow calibration on other scales.

For each positive pulse connected to Pin 8 of U012, a constant current pulse is sourced at Pin 15 of U012. This current pulse charges C122, which is

discharged by R124. The average voltage on C122 is coupled through HV, BAT, and ALARM TEST switch to voltage-follower Pin 5 of U311. Pin 7 of U311 drives the meter and recorder output.

Time Constant

The meter time constant is determined by R124 and C122. For a slower time constant, C122 is paralleled by C101. When C101 is not used, it is connected to Pin 7 of U311 (voltage follower), maintaining the same voltage level as C122. This allows C101 to be switched in or out of the circuit without transients.

Alarm

An alarm is provided by U021, Pins 1, 2, and 3. The alarm set control biases the op-amp U021 for a low output. When the meter signal at Pin 3 exceeds the bias of Pin 2, the output at Pin 1 goes high. Q102 and Q103 saturate, allowing supply voltage to be coupled to:

Lamp voltage through R004.

Audio Oscillator U16 through CR112.

R116 couples back to Base of Q102, locking up the Alarm On.

Through CR113 to Audio Transformer T211, allowing full voltage for full volume.

Through R111 to saturating current sink Q101 for external use.

Reset

Reset is provided by coupling a voltage to the base of transistors U012 pins 1, 2, 3, and 4, 5, 6. Both transistors saturate. One discharges C122 causing the meter to zero. Pin 3 U012 turns Q102 off, allowing the alarm to reset.

Audio

A high on Pin 4 U111 turns the oscillator on saturating Q111 with each positive swing of the oscillator. T211 couples the pulses to the unimorph. Audio volume is controlled by voltage, applied to Pin 2 of T211. This is either 4.3 volts from the alarm circuit or 0 to 4.3 volts from external volume control through emitter follower Q104.

For counting, audio pulse width is set by R113/C111 of U011 with one pulse per count. For an alarm condition, Pin 4 U111 is held high through CR112 until alarm is reset. Alarm audio tone is controlled by R117 and C112.

High Voltage (HV)

The high voltage power supply is a blocking oscillator utilizing Q401-T411 and quadrupler CR123, CR421, CR422 and through CR423. The HV output is controlled by conduction to ground through Q302. With Q302 saturated, the HV output is maximum.

The op amp, U311 Pins 1, 2, 3, is used as a comparator to compare the voltage reference at Pin 3 to the feedback voltage at Pin 2 through R322 for voltage control and regulation. High voltage is adjusted by HV control R311 changing bias on Pin 2 U311. With the HV control wiper at ground, H.V output is maximum.

Low Voltage

Low voltage is supplied by internal battery B1 (wiring diagram, 347 × 126) or line power T1. Unregulated power at C125 is coupled to voltage regulator VR211 and battery charger U201-Q301.

Regulated low voltage is supplied to the balance of the circuit through VR131 at 5.0 volts and U301 at 1.2 volts.

Battery Charge

Battery charge is provided by voltage regulator U201 and power transistor Q301. R402 limits charge current for discharged battery. A negative voltage coefficient of 0-0063 volts per degree F is provided by ratio of R013/R201. R013 set output voltage to 6.825 volts.

High Voltage Test

High voltage test is supplied by R001 through HV TEST switch, BAT TEST switch, ALARM TEST, Pin 5 of U311, then the meter. The HV readout is calibrated by R001.

Alarm Set Voltage

Alarm set voltage is coupled from ALARM SET control through the ALARM TEST switch, voltage follower Pin 5 of U311, and to the meter.

Battery Test Voltage

Battery test voltage is controlled by R002 through BAT TEST switch, ALARM TEST switch, voltage follower Pin 5 of U311 to the meter.

Section 9

Recycling

Ludlum Measurements, Inc. supports the recycling of the electronics products it produces for the purpose of protecting the environment and to comply with all regional, national and international agencies that promote economically and environmentally sustainable recycling systems. To this end, Ludlum Measurements, Inc. strives to supply the consumer of its goods with information regarding reuse and recycling of the many different types of materials used in its products. With many different agencies, public and private, involved in this pursuit it becomes evident that a myriad of methods can be used in the process of recycling. Therefore, Ludlum Measurements, Inc. does not suggest one particular method over another, but simply desires to inform its consumers of the range of recyclable materials present in its products, so that the user will have flexibility in following all local and federal laws.

The following types of recyclable materials are present in Ludlum Measurements, Inc. electronics products, and should be recycled separately. The list is not all-inclusive, nor does it suggest that all materials are present in each piece of equipment:

Batteries	Glass	Aluminum and Stainless Steel
Circuit Boards	Plastics	Liquid Crystal Display (LCD)

Ludlum Measurements, Inc. products which have been placed on the market after August 13, 2005 have been labeled with a symbol recognized internationally as the "crossed-out wheelie bin" which notifies the consumer that the product is not to be mixed with unsorted municipal waste when discarding; each material must be separated. The symbol will be placed near the AC receptacle, except for portable equipment where it will be placed on the battery lid.

The symbol appears as such:

Section 10

Parts List

	Reference	Description	Part Number
Model 177 Alarm Ratemeter	UNIT	Completely Assembled Model 177 Alarm Ratemeter	48-1632
Main Board, Drawing 347 × 227	BOARD	Completely Assembled Circuit Board	5347-293
CAPACITORS	C001	10UF, 20V,	04-5655
	C011	47PF, 100V	04-5660
	C012	68UF, 6.3V	04-5654
	C021	0.1UF, 50V	04-5663
	C022	0.001UF, 100V	04-5659
	C023-C024	0.1UF, 50V	04-5663
	C025	10PF, 100V	04-5673
	C101	22UF, 10V	04-5672
	C111	0.022UF, 50V	04-5667
	C112	470PF, 100V	04-5668
	C121	0.001UF, 100V	04-5659
	C122	2.2UF, 20V	04-5671
	C123	1UF, 35V	04-5656
	C124	100PF, 3KV	04-5532
	C125	3300UF, 35V	04-5675
	C211	47UF, 10V	04-5666
	C221	0.0056UF, 3KV	04-5522
	C301-C302	47UF, 10V	04-5666
	C311-C312	0.01UF, 50V	04-5664
	C321	100PF, 3KV	04-5532
	C322	0.0056UF, 3KV	04-5522
	C323	0.0047UF, 3KV	04-5547

	Reference	Description	Part Number
	C401-C402	1UF, 35V	04-5656
	C403	0.1UF, 50V	04-5663
	C411	47UF, 10V	04-5666
	C421-C423	0.0047UF, 3KV	04-5547
TRANSISTORS	Q101	2N7002L	05-5840
	Q102	MMBT3904T	05-5841
	Q103	MJD210	05-5843
	Q104	MMBT3904T	05-5841
	Q111	MMBT3904T	05-5841
	Q301	MJD200	05-5844
	Q302	MMBT3904T	05-5841
	Q401	MJD210	05-5843
VOLTAGE REGULATOR	VR211	LM2931AT 5.0	05-5813
INTEGRATED CIRCUITS	U011	CD74HC4538M	06-6297
	U012	CA3096M	06-6288
	U021	TLC372ID	06-6290
	U111	ICM7555CBA	06-6300
	U121	CA3096M	06-6288
	U201	ICL7663SCBA	06-6302
	U301	LM285M-1.2	05-5845
	U311	TLC27M7ID	06-6292
DIODES			
	CR111-CR114	MMBD914L	07-6353
	CR201-CR202	CXSH-4	07-6358
	CR321	1N4007	07-6274
	CR401	MMBD914L	07-6353
	CR421-CR423	1N4007	07-6274
THERMISTOR			
	R314	250	07-6366
POTENTIOMETERS / TRIMMERS			
	R001	1M, HV TEST	09-6906
	R002	50K, BAT T	09-6920
	R013	50K, BAT C	09-6920

	Reference	Description	Part Number
RESISTORS			
	R003	475K, 1%, 125mW	12-7859
	R004	10.0, 1%, 125mW	12 7836
	R011	4.75K, 1%, 125mW	12-7858
	R012	82.5K, 1%, 125mW	12-7849
	R014-R015	100K, 1%, 125mW	12 7834
	R016	100, 1%, 125mW	12-7840
	R021-R022	10.0K, 1%, 125mW	12-7839
	R023	100K, 1%, 125mW	12-7834
	R024	1.00K, 1%, 125mW	12-7832
	R025	10.0K, 1%, 125mW	12-7839
	R026-R027	100K, 1%, 125mW	12-7834
	R028	10.0K, 1%, 125mW	12-7839
	R029	221K, 1%, 125mW	12-7845
	R0210	5.62K, 1%, 125mW	12-7871
	R101	1.00K, 1%, 125mW	12-7832
	R102	10.0K, 1%, 125mW	12-7839
	R103	100, 1%, 125mW	12-7840
	R111	1.00K, 1%, 125mW	12-7832
	R112	100K, 1%, 125mW	12-7834
	R113	1.00M, 1%, 125mW	12-7844
	R114	SAT, TYPICALLY 35.7K, 1%, 125mW	12-7911
	R115	100 OHM, 1%	12-7840
	R116	56.2K, 1%, 125mW	12-7873
	R117	1.00M, 1%, 125mW	12-7844
	R118	3.32K, 1%, 125mW	12-7870
	R121	3.92K, 1%, 125mW	12-7875
	R122	10.0K, 1%, 125mW	12-7839
	R123	100, 1%, 125mW	12-7840
	R124	392K, 1%, 125mW	12-7841
	R125	47.5K, 1%, 125mW	12-7872
	R126	100K, 1%, 125mW	12-7834
	R127	10.0K, 1%, 125mW	12-7839
	R128	221K, 1%, 125mW	12-7845
	R129	1M	10-7028
	R201	165K, 1%, 125mW	12-7877
	R202	1.00K, 1%, 125mW	12-7832
	R203	2.2, 5%, 125mW	12-7932
	R221	1M	10-7028
	R301	10.0K, 1%, 125mW	12-7839

	Reference	Description	Part Number
	R302	1.00K, 1%, 125mW	12-7832
	R303	2.21K, 1%, 125mW	12-7835
	R311	750K, 1%, 125mW	12-7882
	R312	301, 1%, 125mW	12-7863
	R313	475 ohm, 1%, 125mW	12-7851
	R315	22.1K, 1%, 125mW	12-7843
	R316	1.00M, 1%, 125mW	12-7844
	R321-R322	1G	12-7686
	R323	1M	10-7028
	R401	200, 1%, 125mW	12-7846
	R402	15, 1W	12-7738
TRANSFORMERS	T211	4275-083	4275-083
	T411	40-0902, 9=GND, 10=GND	40-0902
MISCELLANEOUS	P1	CONN-640445-3	
		MTA156	13-8125
	P2	CONN-1-640456-2	
		MTA100	13-8061
	P3	CONN-1-640456-0	
		MTA100	13-8066
	10 EA.	CLOVERLEAF RECEPT.	
		011-6809-000-599	18-8771
Calibration Board, Drawing 347 × 132	BOARD	Completely Assembled Calibration Board	5347-189
CAPACITORS			
	C1	0.0047UF, 100V	04-5570
	C2	0.047UF, 100V	04-5565
POTENTIOMETERS			
	R1	10K, RECORDER	09-6787
	R2	100K, HV	09-6813
	R3	1M, X1	09-6814
	R4	1M, X10	09-6814
	R5	2M, X100	09-6834
	R6	250K, X1000	09-6819
	R7	10K, DISCRIMIINATOR	09-6787

	Reference	Description	Part Number
RESISTOR			
	R9	680, 1/3W	12-7885
RESISTOR NETWORK			
	RN1	10K	12-7720
MISCELLANEOUS			
	P6	CONN 1-640457-1 MTA100	13 8397
Wiring Diagram, Drawing 347 × 230			
	S1	46206-LR SLIDE	08-6523
SWITCHES	S2	PA-1002	08-6543
	S3	7101-SYZ-QE	08-6511
	S4	HV (#923 SWITCHCRAFT)	08-6518
	S5	BAT (#923 SWITCHCRAFT)	08-6518
	S6	ALARM (#923 SWITCHCRAFT)	08-6518
	S7	RESET (30 1 PB GRAYHILL)	08-6517
POTENTIOMETERS			
	R1	10K, VOLUME	09-6753
	R2	100K, ALARM SET	09-6795
CONNECTORS			
	J1	MAIN BOARD 5347-293, 3 PIN SIP (CONN 640428-3 MTA 156)	13-8124
	J2	MAIN BOARD 5347-293, 12 PIN SIP (CONN 1-640441-2)	13-8431
	J3	MAIN BOARD 5347-293, 10 PIN SIP (CONN 1-640441-0MTA 100)	13-8197
	J4	ACRECEP (RECPT-AC W/FUSE)	13-8427
	J5	"D" CONN, 9 PIN (RECPT-RD9F000V3 9P)	13-8003
	J6	CALIBRATION BOARD 5347-189, 11 PIN SIP (CONN 1-640441-1 MTA 100)	13-8161
	J7	FLYING LEAD TO MAIN BOARD 5347-293 (RECPT-UG706)	13-7751

	Reference	Description	Part Number
AUDIO			
	DS2	UNIMORPH (TEC3526PU)	21-9251
BATTERY			
	B1	6V (PS610 GELL CELL)	21-9385
TRANSFORMER			
	T1	P6465	22-9908
MISCELLANEOUS			
	F1	1 AMP (FUSE #312001 AGC-1)	21-9277
	DS1	PILOT (LAMP-RED)	21-9296
	DS3	ALARM (BULB #338)	21-9307
	*	LAMP HOLDER	
		101-8430-09-201	21-9410
	M1	M177 METER	4173-166
	*	KNOB PKG-50B	08-6601
	*	KNOB-407D2KI	08-6604
	*	KNOB-LOCK KL 701	08-6607
	*	KNOB-70-1-2G	08-6637

Section 11

Drawings

MAIN BOARD FOR HOYT 1mA/1K MOVEMENT, Drawing 347 × 227

MAIN BOARD (HOYT 1mA/1K) Component Layout, Drawing 347 × 228

CALIBRATION BOARD, Drawing 347 × 132

CALIBRATION BOARD Component Layout, Drawing 347 × 133

WIRING DIAGRAM FOR HOYT 1mA/1K MOVEMENT, Drawing 347 × 230

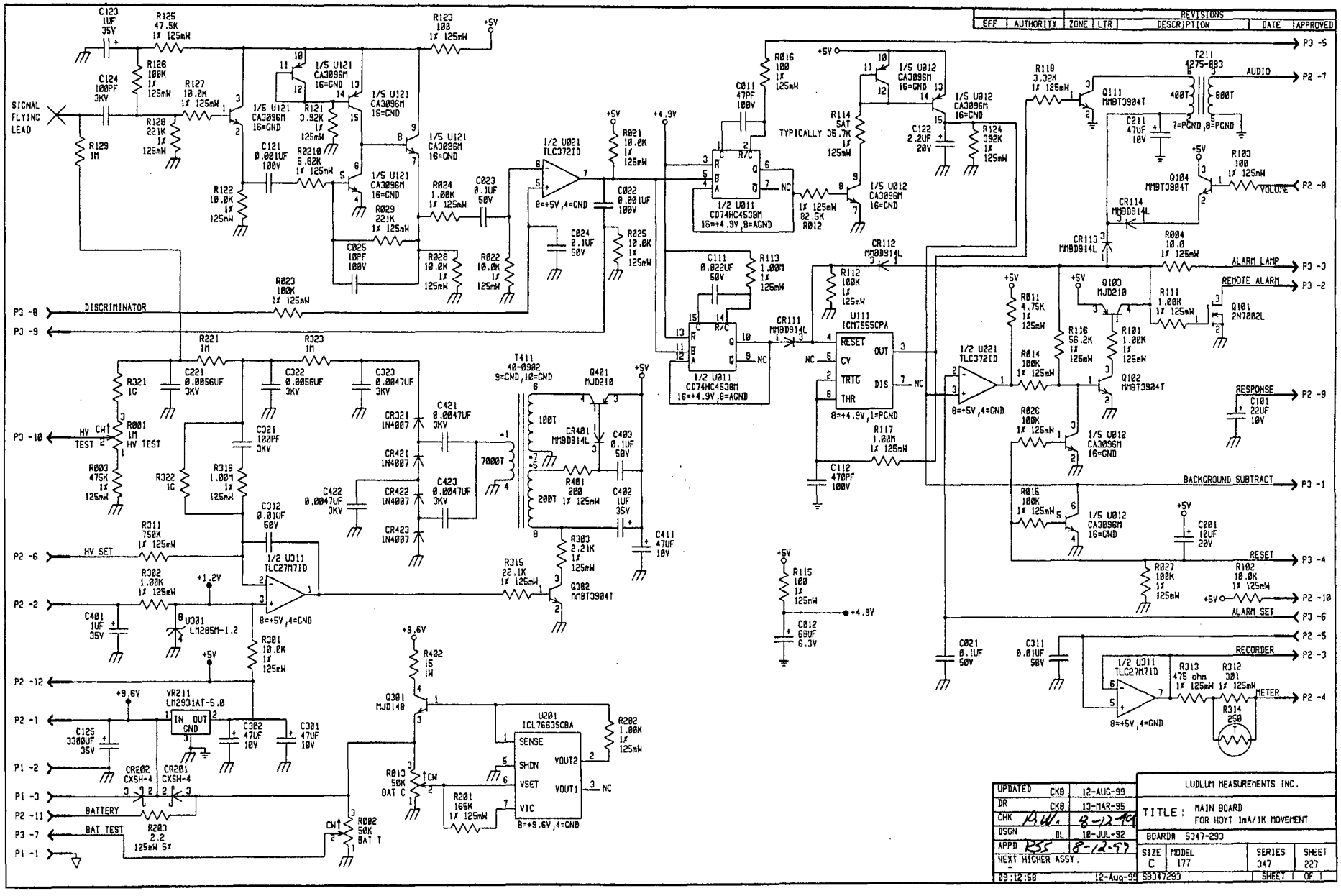
REVISIONS
EFF | AUTHORITY | ZONE | LTR | DESCRIPTION | DATE | APPROVED
SIGNAL FLYING LEAD
DISCRIMINATOR
HV CW TEST
HV SET
BATTERY
BAT TEST
AUDIO
VOLUME
ALARM LAMP
REMOTE ALARM
RESPONSE
BACKGROUND SUBTRACT
RESET
ALARM SET
RECORDER
METER
LUDLUM MEASUREMENTS INC.
TITLE: MAIN BOARD FOR HOYT 1mA/1K MOVEMENT
BOARD# 5347-293
UPDATED CKB 12-AUG-99
DR CKB 10-MAR-95
DSGN DL 10-JUL-92
APPD 8-12-99
NEXT HIGHER ASSY.
SIZE C
MODEL 177
SERIES 347
SHEET 227
SB347293
SHEET 1 OF 1
09:12:58 12-Aug-99

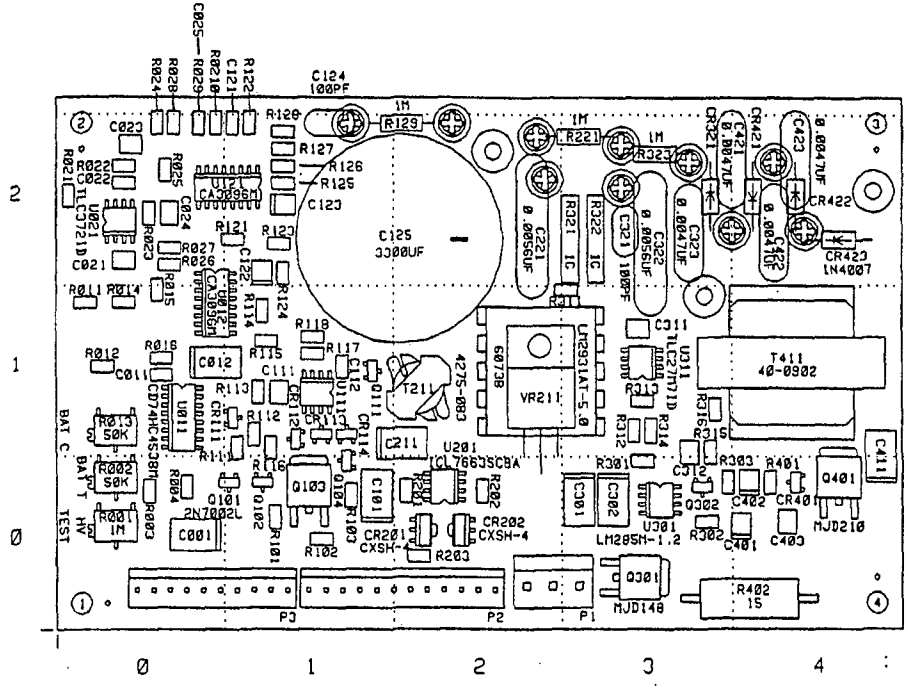

LUDLUM MEASUREMENTS INC. SHEETWATER, TX.				
DR CKB	03/13/95	TITLE: MAIN BOARD (HOYT 1mA/1K)		
CHK P.W.	2/12/97	BOARD# 5347-293	85347293	
DSGN DL	07/10/92	MODEL 177	SERIES 347	SHEET 228
APP JGW	2/13/97	COMP ARTWORK ☐	SLDR ARTWORK ☐	
11:40:25	17-Mar-95	COMP OUTLINE ☒	SLDR OUTLINE ☐	
COMP PASTE ☐	COMP MASK ☐	SLDR PASTE ☐	SLDR MASK ☐	

REVISIONS						
EFF	AUTHORITY	ZONE	LTR	DESCRIPTION	DATE	APPROVED

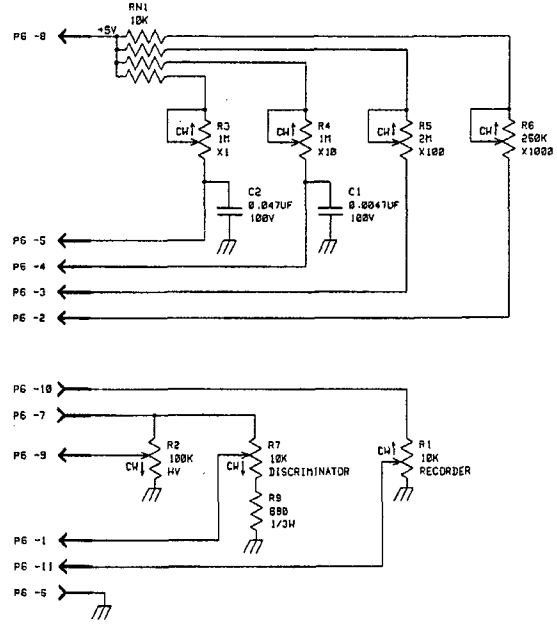

UPDATED -	/ /	LUDLUM MEASUREMENTS INC.
DR CKB	10/20/92	TITLE: CALIBRATION BOARD
CHK DW	6/10/92	
DSGN -	/ /	BOARD# 5347-189
APPD JGW	6/10/93	SIZE D · MODEL 177 · SERIES 347 · SHEET 132
NEXT HIGHER ASSY. -		
14:18:53	10-Jun-93	5B347189 · SHEET 1 OF 1

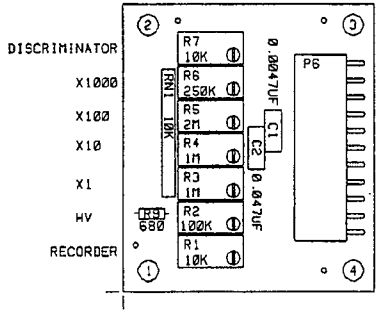

LUDLUM MEASUREMENTS INC. SWEETWATER, TX.					
DR CKB	10/20/92	TITLE : CALIBRATION BOARD			
CHK DW	6/1/93	BOARD# 5347-189			8S347189
DSGN -	/ /	MODEL 177	SERIES 347	SHEET 133	
APP JGW	6-10-93				
14:19:19	10-Jun-93	COMP SIDE ☐	SLDR SIDE ☐	OUTLINE ☒	
COMP PASTE ☐	COMP MASK ☐	SLDR PASTE ☐	SLDR MASK ☐		

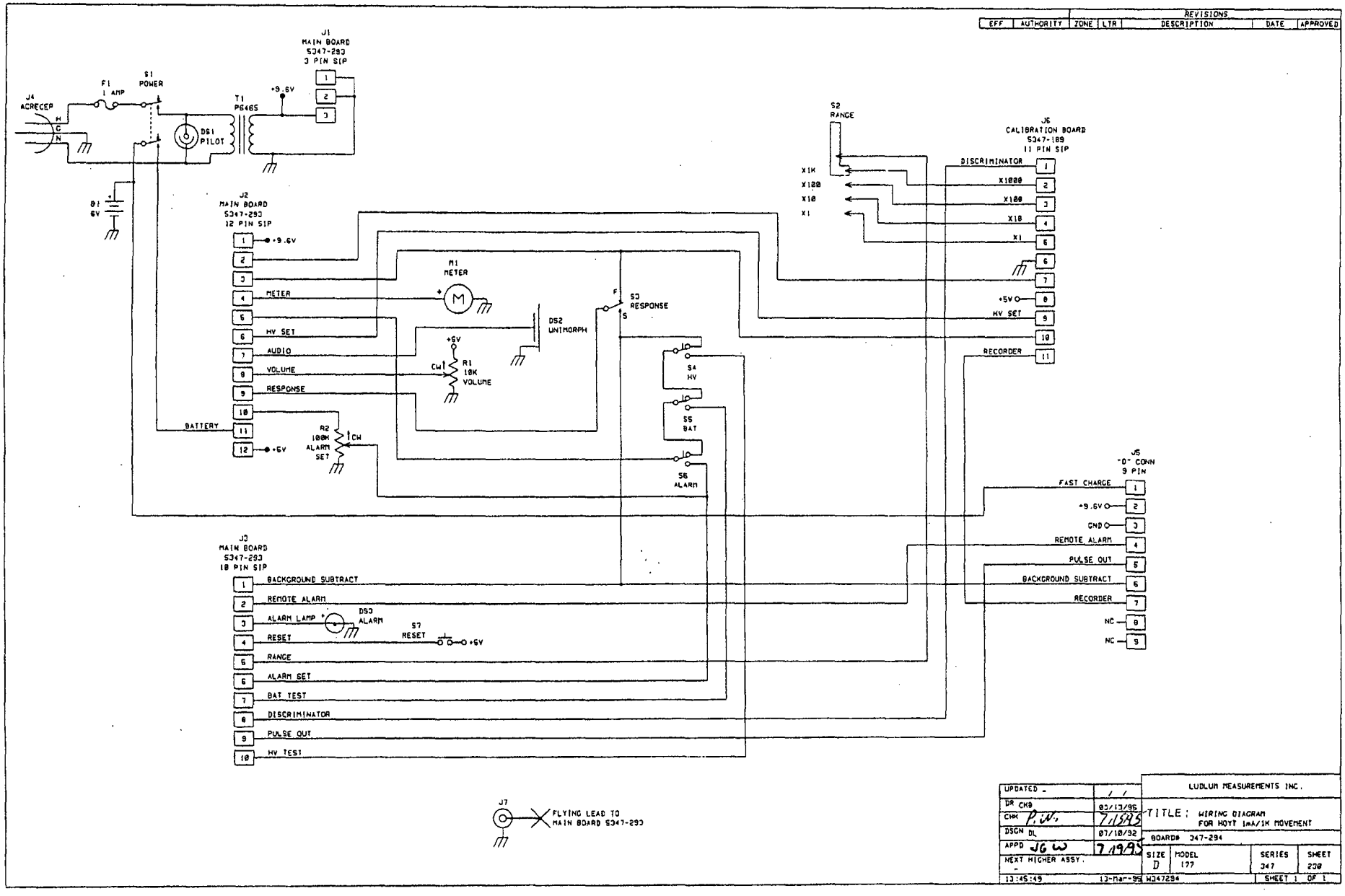
REVISIONS
EFF | AUTHORITY | ZONE | LTR | DESCRIPTION | DATE | APPROVED
J4 ACRECEP
H
C
N
F1 1 AMP
S1 POWER
DS1 PILOT
T1 P6465
+9.6V
J1 MAIN BOARD 5347-293 3 PIN SIP
1
2
3
B1 6V
J2 MAIN BOARD 5347-293 12 PIN SIP
+9.6V
METER
HV SET
AUDIO
VOLUME
RESPONSE
BATTERY
+6V
M1 METER
DS2 UNIMORPH
+5V
R1 10K VOLUME
CW
R2 100K ALARM SET
S3 RESPONSE
F
S
S4 HV
S5 BAT
S6 ALARM
S2 RANGE
X1K
X100
X10
X1
J6 CALIBRATION BOARD 5347-189 11 PIN SIP
DISCRIMINATOR
X1000
X100
X10
X1
+5V
HV SET
RECORDER
J5 "D" CONN 9 PIN
FAST CHARGE
+9.6V
GND
REMOTE ALARM
PULSE OUT
BACKGROUND SUBTRACT
RECORDER
NC
NC
J3 MAIN BOARD 5347-293 10 PIN SIP
BACKGROUND SUBTRACT
REMOTE ALARM
ALARM LAMP
DS3 ALARM
RESET
S7 RESET
+6V
RANGE
ALARM SET
BAT TEST
DISCRIMINATOR
PULSE OUT
HV TEST
J7
FLYING LEAD TO MAIN BOARD 5347-293
UPDATED -
DR CKD
CHK P.W.
DSGN DL
APPD JGW
NEXT HIGHER ASSY.
03/13/95
7/19/95
07/10/92
7/19/95
13:45:49
13-Mar-95
LUDLUM MEASUREMENTS INC.
TITLE: WIRING DIAGRAM FOR HOYT 1mA/1K MOVEMENT
BOARD# 347-294
SIZE D
MODEL 177
SERIES 347
SHEET 290
W347294
SHEET 1 OF 1

LUDLUM MODEL 19
MICRO R METER

November 2005

Serial Number 207422 and Succeeding

Serial Numbers

LUDLUM MEASUREMENTS, INC.
501 OAK STREET, P.O. BOX 810
SWEETWATER, TEXAS 79556
325-235-5494, FAX: 325-235-4672

REV#	ALTERATIONS	DATE	BY
1	VALID	3-16-04	DDW

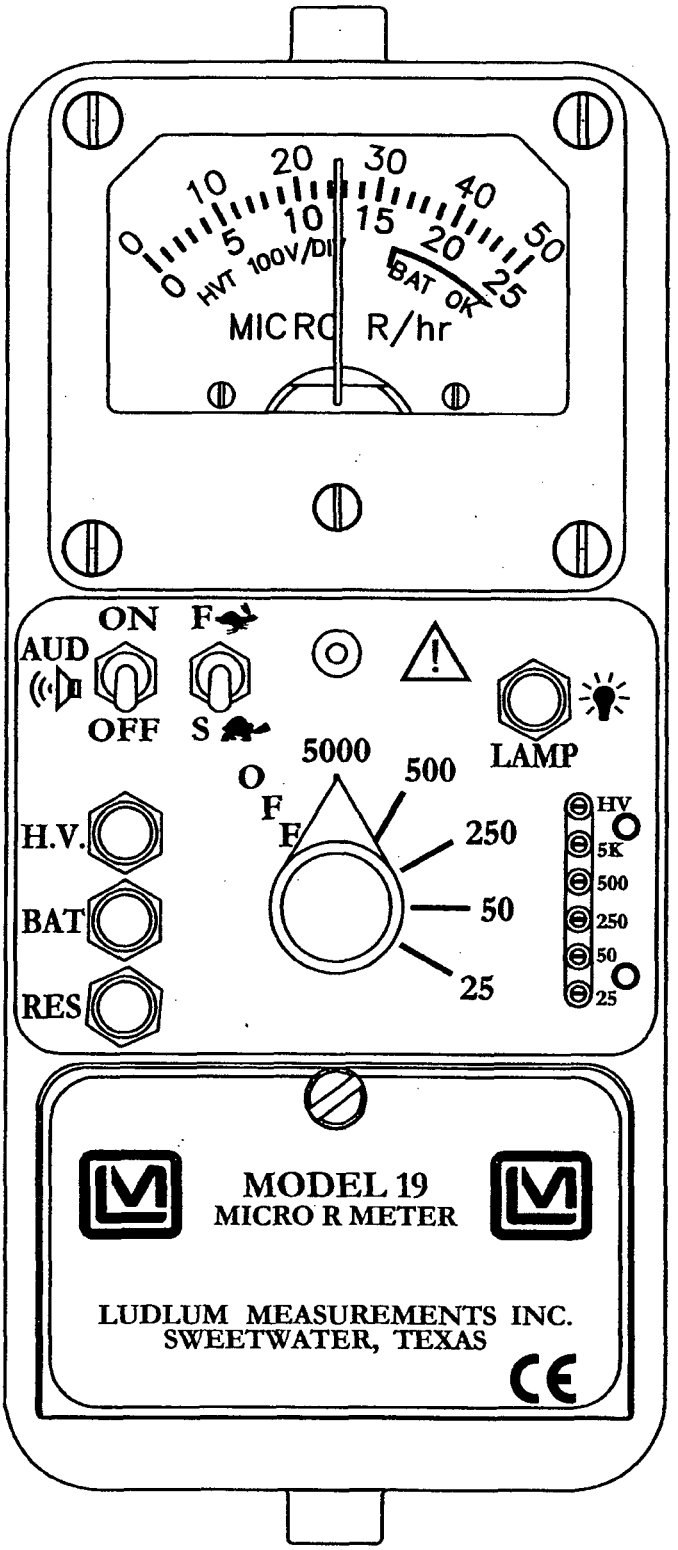

DWN	DATE	CHK	DATE	APP	DATE
DDW	3-16-04		3-18-04		3-18-04

DWG NUM: 4367-169.IAM

SCALE: FULL ☒ OTHER

TITLE: M 19 FRONT PANEL

LUDLUM MEASUREMENTS, INC.
501 OAK STREET
SWEETWATER, TEXAS 79556

SERIES	SHEET
367	169

Table of Contents

Introduction **1**

Getting Started **2**

Unpacking and Repacking **2-1**

Battery Installation **2-1**

Operational Check **2-2**

Maintenance **2-3**

Recalibration **2-3**

Batteries **2-3**

Specifications **3**

Identification of Controls and Functions **4**

Safety Considerations **5**

Environmental Conditions for Normal Use **5-1**

Warning Markings and Symbols **5-1**

Cleaning and Maintenance Precautions **5-2**

Troubleshooting **6**

Troubleshooting Electronics which utilize a Scintillation Detector **6-1**

Technical Theory of Operation **7**

Detector **7-1**

Input **7-1**

Amplifier **7-1**

Discriminator **7-1**

Audio **7-2**

Scale Ranging **7-2**

Digital Analog Converter **7-2**

Meter Drive **7-2**

Fast/Slow Time Constant **7-2**

Low Voltage Supply **7-2**

High Voltage Test **7-2**

High Voltage Supply **7-3**

Recycling ***8***

Parts List ***9***

Model 19 Micro R Meter **9-1**

Main Board, Drawing 367 × 166 **9-1**

Wiring Diagram, Drawing 367 × 174 **9-4**

Drawings and Diagrams ***10***

Section 1

Introduction

The Ludlum Model 19 Micro R Meter utilizes an internally-mounted 1" × 1" NaI(T1) scintillator for optimum performance in locating and measuring low-level (near "background") gamma radiation.

The unit features a pushbutton lighted meter and was designed to be moisture and dust resistant. The meter is housed in a rugged aluminum bezel with waterproof seals. All controls, including a calibration potentiometer for each range, are located on the front panel. Front panel switches are rubber-booted to seal out moisture and dust. A high voltage (HV) test control is provided to allow rapid plateau testing of the detector.

Five range divisions are provided in the 0-5000 micro R/hr spectrum. The meter face is made up of two scales, 0-50 and 0-25, plus battery test. The 0-50 scale corresponds to the 50, 500 and 5000 positions on the range selector switch. The 0-25 scale corresponds to the 25 and 250 positions on the range selector switch.

The instrument is capable of using either standard "D" cell flashlight batteries or nickel-cadmium rechargeable batteries. However, the Model 19 does not include circuitry for recharging the batteries. The two "D" cell batteries are located in an isolated compartment, easily accessible from the front panel.

The Model 19 NaI scintillator is energy sensitive. An energy response curve is included in section 10 of this manual for further reference.

Section 2

Getting Started

Unpacking and Repacking

Remove the calibration certificate and place it in a secure location. Remove the instrument and accessories (batteries, cable, etc.) and ensure that all of the items listed on the packing list are in the carton. Check individual item serial numbers and ensure calibration certificates match. The Model 19 serial number is located on the front panel below the battery compartment. Most Ludlum Measurements, Inc. detectors have a label on the base or body of the detector for model and serial number identification.

Important!

If multiple shipments are received, ensure that the detectors and instruments are not interchanged. Each instrument is calibrated to specific detectors, and therefore not interchangeable.

To return an instrument for repair or calibration, provide sufficient packing material to prevent damage during shipment. Also provide appropriate warning labels to ensure careful handling. Include detector(s) and related cable(s) for calibration. Include brief information as to the reason for return, as well as return shipping instructions:

- **Return shipping address**
- **Customer name or contact**
- **Telephone number**
- **Description of service requested and all other necessary information**

Battery Installation

Ensure the Model 19 power switch is in the "OFF" position. Open the battery lid by pushing down and turning the quarter-turn thumbscrew counterclockwise ¼ turn. Install two "D" size batteries in the compartment.

Note the (+) and (-) marks inside the battery door. Match the battery polarity to these marks. Close the battery box lid, push down and turn the quarter-turn thumb screw clockwise ¼ turn.

Note:

Center post of a flashlight battery is positive. The batteries are placed in the battery compartment in opposite directions.

Operational Check

Turn the Range Selector switch to the "25" position. Depress the "BAT" pushbutton switch and ensure that the meter needle falls within the "BAT OK" marks. Check for a proper background reading. A typical reading would be: 5-15 uR/hr

Turn the Range Selector switch to the "5000" position. Expose the instrument to a "check source" and verify that the instrument indicates within 20% of the check source reading obtained during the last calibration.

Switch the "AUD ON/OFF" switch to the "ON" position and confirm that the external unimorph speaker produces an audible click for each event detected. The "AUD ON/OFF" switch will silence the audible clicks if in the "OFF" position. It is recommended that the "AUD ON/OFF" switch be kept in the "OFF" position when not needed in order to preserve battery life.

Turn the Range Selector switch to the "250" position and increase the source activity for a meter reading of 10-100 uR/hr. While observing the meter fluctuations, select between the fast and slow response time ("F/S") positions to observe variations in the display. The "S" position should respond approximately 5 times slower than the "F" position.

Note:

The slow response position is normally used when the instrument is displaying low numbers which require a more stable meter movement. The fast response position is used at high rate levels.

Check the meter reset function by depressing the "reset" pushbutton switch and ensuring the meter needle drops to "0".

Depress the "LAMP" pushbutton switch. Ensure that the meter face illuminates when the switch is depressed. Proceed to use the instrument.

Maintenance

Instrument maintenance consists of keeping the instrument clean and periodically checking the batteries and the calibration. The Model 19 instrument may be cleaned with a damp cloth (using only water as the wetting agent). Do not immerse instrument in any liquid. Observe the following precautions when cleaning:

1. Turn the instrument off and remove the batteries.
2. Allow the instrument to sit for 1 minute before accessing internal components.

Recalibration

Recalibration should be accomplished after any maintenance or adjustment of any kind has been performed on the instrument. Battery replacements are not considered maintenance and do not normally require instrument recalibrated.

Note:

Ludlum Measurements, Inc. recommends recalibration at intervals no greater than one year. Check the appropriate regulations to determine required recalibration intervals.

Ludlum Measurements offers a full service repair and calibration department. We not only repair and calibrate our own instruments but most other manufacturer's instruments. Calibration procedures are available upon request for customers who choose to calibrate their own instruments.

Batteries

The batteries should be removed any time the instrument is placed into storage. Battery leakage may cause corrosion on the battery contacts, which must be scraped off and/or washed using a paste solution made from baking soda and water. Use a spanner wrench to unscrew the battery contact insulators,

exposing the internal contacts and battery springs. Removal of the handle will facilitate access to these contacts.

Note:

Never store the instrument over 30 days without removing the batteries. Although this instrument will operate at very high ambient temperatures, battery seal failure may occur at temperatures as low as 100°F.

Section 3

Specifications

Linearity: Reading within ± 10% of true value.

High Voltage: Variable from 400 to 1500 Vdc; electronically regulated to within ± 1%.

Battery Dependence: Instrument calibration change less than 3% within the meter battery check limits.

Power: Two standard alkaline "D" cell batteries, secured in an isolated compartment.

Battery Life: Expected lifetime of approximately 2000 hours with the "AUD ON/OFF" switch in the off position.

Audio Output: Built-in unimorph speaker and "ON/OFF" switch provided on the front panel.

Counting Ranges: Two-scale meter face presenting 0-50 micro R/hr with full scale range positions of 5000, 500 and 50; and 0-25 micro R/hr with full scale range positions of 250 and 25.

Meter: 1 mA, 2 ½ -inch scale, pivot-and-jewel suspension.

Detector: Photomultiplier coupled to a 1" × 1" NaI(Tl) crystal, mounted inside the instrument housing.

Construction: Cast and drawn aluminum with computer-beige powdercoating finish and printed membrane front panel.

Size: 15.75 cm (6.2") H × 8.9 cm (3.5") W × 21.6 cm (8.5") L, not including instrument handle.

Weight: 1.36 kg (3 lbs.), less detector and batteries.

Section 4

Identification of Controls and Functions

Range Selector Switch: A six-position switch marked OFF, 5000, 500, 250, 50 and 25. Moving the range selector switch to one of the range positions (5000, 500, 250, 50, 25) provides the operator with an overall range of 0-5000 micro R/hr. Note that the range positions 5000, 500 and 50 are screened in black and correspond to the meter scale screened in black. The range positions 250 and 25 are screened in red and correspond to the meter scale screened in red.

AUD ON-OFF Toggle Switch: In the ON position, operates the unimorph speaker, located on the left side of the instrument. The frequency of the clicks is relative to the rate of the incoming pulses. The higher the rate is, the higher the audio frequency. The audio should be turned OFF when not required, to reduce battery drain.

F-S Toggle Switch: Provides meter response. Selecting the fast, "F", position of the toggle switch provides 90% of full scale meter deflection in four seconds. In the slow, "S", position, 90% of full scale meter deflection takes 22 seconds. In "F" position, there is fast response and large meter deviation. The "S" position should be used for slow response and damped, meter deviation.

BAT Pushbutton Switch: When depressed, this switch indicates the battery charge status on the meter. The range selector switch must be out of the OFF position.

RES Pushbutton Switch: When depressed, this switch provides a rapid means to drive the meter to zero.

LAMP Pushbutton Switch: When depressed, this switch lights the meter face.

HV Pushbutton Switch: When depressed, the meter reads the detector high voltage. Each meter division is equivalent to 100 volts.

HV Adjustment: Provides a means to vary the high voltage from 400 to 1500 volts.

Range Calibration Adjustments: Recessed potentiometers located under the calibration cover, on the right side of the front panel. These adjustment controls allow individual calibration for each range multiplier.

Section 5

Safety Considerations

Environmental Conditions for Normal Use

Indoor or outdoor use

No maximum altitude

Temperature range of –20°C to 50°C (–4°F to 122°F)

Maximum relative humidity of less then 95% (non-condensing)

Pollution Degree 1 (as defined by IEC 664).

Warning Markings and Symbols

Caution!

The operator or responsible body is cautioned that the protection provided by the equipment may be impaired if the equipment is used in a manner not specified by Ludlum Measurements, Inc.

The Model 19 Micro R Meter is marked with the following symbols:

⚠ **CAUTION** (per ISO 3864, No. B.3.1) – designates hazardous live voltage and risk of electric shock. During normal use, internal components are hazardous live. This instrument must be isolated or disconnected from the hazardous live voltage before accessing the internal components. This symbol appears on the front panel. **Note the following precautions:**

Warning!

The operator is strongly cautioned to take the following precautions to avoid contact with internal hazardous live parts that are accessible using a tool:

1. Turn the instrument power OFF and remove the batteries.
2. Allow the instrument to sit for 1 minute before accessing internal components.

The "**crossed-out wheelie bin**" symbol notifies the consumer that the product is not to be mixed with unsorted municipal waste when discarding; each material must be separated. The symbol is placed on the battery compartment lid. See section 8, "Recycling" for further information.

Cleaning and Maintenance Precautions

The Model 19 may be cleaned externally with a damp cloth, using only water as the wetting agent. Do not immerse the instrument in any liquid. Observe the following precautions when cleaning or performing maintenance on the instrument:

1. Turn the instrument OFF and remove the batteries.

2. Allow the instrument to sit for 1 minute before cleaning the exterior or accessing any internal components for maintenance.

Section 6

Troubleshooting

Occasionally, you may encounter problems with your LMI instrument or detector that may be repaired or resolved in the field, saving turnaround time and expense in returning the instrument to us for repair. Toward that end, LMI electronics technicians offer the following tips for troubleshooting the most common problems. Where several steps are given, perform them in order until the problem is corrected. Keep in mind that with this instrument, the most common problems encountered are: (1) sticky meters (2) battery contacts.

Note that the first troubleshooting tip is for determining whether the problem is with the electronics or with the detector. A Ludlum Model 500 Pulser is invaluable at this point, because of its ability to simultaneously check high voltage, input sensitivity or threshold, and the electronics for proper counting.

We hope these tips will prove to be helpful. As always, please call if you encounter difficulty in resolving a problem or if you have any questions.

Troubleshooting Electronics which utilize a Scintillation Detector

SYMPTOM	POSSIBLE SOLUTION
No power (or meter does not reach BAT TEST or BAT OK mark)	1. Check batteries and replace if weak. 2. Check polarity (See marks inside batter lid). Are the batteries installed backwards?

SYMPTOM	POSSIBLE SOLUTION
No power (or meter does not reach BAT TEST or BAT OK mark) (continued)	3. Check battery contacts. Clean them with rough sandpaper or use an engraver to clean the tips. 4. Check for loose or broken wires, especially between the main board and the calibration board.
Nonlinear Readings	1. Check the high voltage (HV) by pressing the HV TEST button. If a Multimeter is used to check the HV, ensure that one with high impedance is used, as a standard Multimeter could be damaged in this process. 2. Check for "sticky" meter movement. Does the reading change when you tap the meter? Does the meter needle "stick" at any spot? 3. Check the "meter zero." Turn the power OFF. The meter should come to rest on "0".
Meter goes full-scale or "Pegs Out"	1. Check the HV and, if possible, the input threshold for proper setting. 2. Check for loose wires, especially between the main board and the calibration board.

Section 7

Technical Theory of Operation

Detector

The detector consists of a crystal of sodium iodide with Thallium activation (NaI Tl) that gives off light pulses when penetrated by radiation photons.

The light pulses are converted to electrical pulses by the photo cathode of the photomultiplier tube. The photomultiplier includes a 9 stage electron amplifier. This amplifier utilizes an electrostatic field for each stage, adding up to a required 500 to 1500 volt supply.

Input

Detector pulses are coupled from the detector through C6 to the amplifier. CR1 protects the amplifier from input shorts. R37 couples the detector to the high voltage supply.

Amplifier

A self-biased amplifier provides gain in proportion to R15 and C4 divided by R14. Transistor (pin 3 of U4) provides amplification. U6 is configured as a current mirror to provide a load for pin 3 of U4. The output self-biases to 2 Vbe (approximately 1.4 volts) at emitter of Q1. This provides just enough bias current through pin 3 of U4 to conduct all of the current from the current mirror.

Positive pulses at R16 are coupled to the discriminator through C5.

Discriminator

Comparator U8 provides discrimination. The discriminator is set by the voltage divider, R21 and R23, coupled to pin 3 of U8. U8 output pulses are coupled to pin 5 of U9A for meter drive and pin 12 of U9B for audio.

Audio

Discriminator pulses are coupled to univibrator pin 12 of U9B. Front panel audio ON-OFF selector controls the reset at pin 13 of U9B. When ON, pulses from pin 10 of U9B turn on oscillator U12, which drives the can-mounted unimorph. Speaker tone is set by R31, C14; duration by R22, C7.

Scale Ranging

Detector pulses from the discriminator are coupled to univibrator pin 5 of U9A. For each scale, the pulse width of pin 6 of U9A is controlled by the front panel calibration controls and their related capacitors. This arrangement allows the same current to be delivered to C9 in proportion to the meter reading.

Digital Analog Converter

U5 is configured as a current mirror. For each pulse of current through R24, an equal current is delivered to C9. This charge is drained off by R25. The voltage across C9 is proportional to the incoming count rate.

Meter Drive

The meter is driven by the collector of Q2 coupled as a voltage follower in conjunction with pin 1 of U10.

For Battery Test, the voltage follower is bypassed and the meter movement is directly coupled to the battery through R8.

Fast/Slow Time Constant

For slow time constant, C17 is switched from the output of the meter drive to parallel C9.

Low Voltage Supply

Battery voltage is coupled to U11 and associated components (a switching regulator) to provide 5 volts at pin 8 to power all circuits.

High Voltage Test

A constant current is developed by collector of Q3 in proportion to HV signal at pin 1 of U17. U16 provides a current mirror to drive the meter

through analog switch logic circuit U15, U14, and U3.

High Voltage Supply

High voltage is developed by switching regulator U13 and T1. Voltage multiplier CR3 thru CR7, and associated components, develop the detector voltage. Voltage feedback is provided by R39 thru U17 to feed back pin 8 of U13 for voltage regulation. Pin 1 of U17 is proportional to the high voltage, and its output is also utilized to measure the high voltage. High voltage is adjusted by varying the feedback current with R42.

Section 8

Recycling

Ludlum Measurements, Inc. supports the recycling of the electronics products it produces for the purpose of protecting the environment and to comply with all regional, national and international agencies that promote economically and environmentally sustainable recycling systems. To this end, Ludlum Measurements, Inc. strives to supply the consumer of its goods with information regarding reuse and recycling of the many different types of materials used in its products. With many different agencies, public and private, involved in this pursuit it becomes evident that a myriad of methods can be used in the process of recycling. Therefore, Ludlum Measurements, Inc. does not suggest one particular method over another, but simply desires to inform its consumers of the range of recyclable materials present in its products, so that the user will have flexibility in following all local and federal laws.

The following types of recyclable materials are present in Ludlum Measurements, Inc. electronics products, and should be recycled separately. The list is not all-inclusive, nor does it suggest that all materials are present in each piece of equipment:

Batteries	Glass	Aluminum and Stainless Steel
Circuit Boards	Plastics	Liquid Crystal Display (LCD)

Ludlum Measurements, Inc. products which have been placed on the market after August 13, 2005 have been labeled with a symbol recognized internationally as the "crossed-out wheelie bin" which notifies the consumer that the product is not to be mixed with unsorted municipal waste when discarding; each material must be separated. The symbol will be placed near the AC receptacle, except for portable equipment where it will be placed on the battery lid.

The symbol appears as such:

Section 9

Parts List

	Reference	Description	Part Number
Model 19 Micro R Meter	UNIT	Completely Assembled Model 19 Micro R Meter	48-1615
Main Board, Drawing 367 × 166	BOARD	Completely Assembled Circuit Board	5367-166
CAPACITORS	C1	47pF, 100V	04-5660
	C2	0.0022µF, 50V	04-5676
	C3	0.001µF, 100V	04-5659
	C4	10pF, 100V	04-5673
	C5	0.01µF, 50V	04-5664
	C6	100pF, 3KV	04-5735
	C7	0.022µF, 50V	04-5667
	C8	1µF, 16V	04-5701
	C9	10µF, 25V	04-5655
	C10	100pF, 100V	04-5661
	C11	68µF, 10V	04-5654
	C12	10µF, 25V	04-5728
	C14	470pF, 100V	04-5668
	C17	47µF, 10V	04-5666
	C18-C27	0.01µF, 500V	04-5696
	C28	0.001µF, 2KV	04-5703
	C29	68µF, 10V	04-5654
	C30-C31	1µF, 16V	04-5701
	C32	270pF, 100V	04-5679
	C33	0.01µF, 50V	04-5664

	Reference	Description	Part Number
TRANSISTORS	Q1	MMBT3904LT1	05-5841
	Q2	MMBT4403LT1	05-5842
	Q3	MMBT3904LT1	05-5841
VOLTAGE REGULATOR	VR1	LT1460KCS3-2.5TR	05-5867
INTEGRATED CIRCUITS	U1-U3	MAX4542ESA	06-6453
	U4-U5	CMXT3904	05-5888
	U6	CMXT3906	05-5890
	U7	MAX4541ESA	06-6452
	U8	MAX985EUK-T	06-6459
	U9	CD74HC4538M	06-6297
	U10	LMC7111BIM5X	06-6410
	U11	LT1304CS8-5	06-6434
	U12	MIC1557BM5	06-6457
	U13	LT1304CS8	06-6394
	U14-U15	MAX4542ESA	06-6453
	U16	CMXT3906	05-5890
	U17-C18	LMC7111BIM5X	06-6410
DIODES	CR1	CMPD2005S	07-6468
	CR2	CMSH1-40M	07-6411
	CR3-CR7	CMPD2005S	07-6468
	CR9	CMSH1-40M	07-6411
SWITCHES	SW1	RANGE SELECTOR	08-6761
	SW2	H.V. PUSHBUTTON	08-6770
	SW3	F-S TOGGLE	08-6781
	SW4	AUD ON-OFF TOGGLE	08-6781
	SW5	RES PUSHBUTTON	08-6770
	SW6	LAMP PUSHBUTTON	08-6770
	SW7	BAT PUSHBUTTON	08-6770
POTENTIOMETERS / TRIMMERS	R33	1M, 64W105 NAME	09-6814
	R34	1M, 64W105 X10	09-6814
	R35	1M, 64W105 X1	09-6814
	R36	1M, 64W105 X0.1	09-6814
	R41	100K, 64W104 X100	09-6813

	Reference	Description	Part Number
	R42	100K, 64W104 HV ADJ	09-6813
	R52	10K, 3266X1-103 NAME	09-6822
RESISTORS			
	R1-R5	200K, 1/8W, 1%	12-7992
	R6	8.25K, 1/8W, 1%	12-7838
	R7	10K, 1/8W, 1%	12-7839
	R8	2.37K, 1/8W, 1%	12-7861
	R9-R11	10K, 1/8W, 1%	12-7839
	R12	200 Ohm, 1/8W, 1%	12-7846
	R13	10K, 1/8W, 1%	12-7839
	R14	4.75K, 1/8W, 1%	12-7858
	R15	200K, 1/8W, 1%	12-7992
	R16	10K, 1/8W, 1%	12-7839
	R17	1K, 1/8W, 1%	12-7832
	R18	4.75K, 1/8W, 1%	12-7858
	R19	2K, 1/8W, 1%	12-7926
	R20-R21	100K, 1/4W, 1%	12-7834
	R22	1M, 1/8W, 1%	12-7844
	R23	2.49K, 1/8W, 1%	12-7999
	R24	14.7K, 1/8W, 1%	12-7068
	R25	200K, 1/4W, 1%	12-7992
	R26	100K, 1/4W, 1%	12-7834
	R27	68.1K, 1/8W, 1%	12-7881
	R28	100K, 1/8W, 1%	12-7834
	R29	1K, 1/8W, 1%	12-7832
	R30	100K, 1/8W, 1%	12-7834
	R31	475K, 1/8W, 1%	12-7859
	R32	100K, 1/8W, 1%	12-7834
	R37	100K, 1/8W, 1%	12-7834
	R38	4.75M, 1/8W, 1%	12-7995
	R39	500M, 3KV, 2%	12-7031
	R40	1M, 1/4W, 1%	12-7844
	R44	1K, 1/4W, 1%	12-7832
	R45	8.25K, 1/8W, 1%	12-7838
	R46-R48	200K, 1/4W, 1%	12-7992
	R49	825K, 1/8W, 1%	12-7005
	R50	953K, 1/8W, 1%	12-7950
	R53	1K, 1/4W, 1%	12-7832
CONNECTORS			
	P1	CONN-640456-4	
		MTA100x4 NAME	13-8088

	Reference	Description	Part Number
	P2	CONN-640456-3 MTA100x3 NAME	13-8081
	P3	CONN-640456-2 MTA100x2 NAME	13-8073
	P4	CONTACT #1434 NAME	18-9124
INDUCTOR			
	L1	22µH, CD43-220	21-9808
TRANSFORMER			
	T1	31032R	21-9925
Wiring Diagram, Drawing 367 × 174			
AUDIO	DS1	M19 LAMP BOARD 5367-113	5367-113
	DS2	UNIMORPH TEC-3526-PU	21-9251
CONNECTOR			
	P1	MTA100x4 MAIN BOARD 5367-166	13-8170
	P2	MTA 100x3 MAIN BOARD 5367-166	13-8135
	P3	MTA 100x2 MAIN BOARD 5367-166	13-8178
BATTERY			
	B1-B2	DURACELL "D"	21-9313
MISCELLANEOUS			
	*	M19 INTERNAL DETECTOR	47-3426
	*	TUBE/XTAL ASSY	2004-061
	M1	MODEL 19 METER ASSY 987010-001 1mA	4367-024
	*	M19 METERFACE (202-016)	7367-023
	*	METER BEZEL W/ GLASS W/ SCREWS	4363-352-00
	*	METER MOVEMENT (1mA)	15-8030
	*	M19 BATTERY BOX LID W/CNTCT	2363-191
	*	DEEP PORTABLE CAN ASSY	4363-615
	*	M19 CASTING	7367-171
	*	M19 MAIN HARNESS	8367-170

Reference	Description	Part Number
*	PORTABLE KNOB	08-6613
*	SWITCH SEAL (P/B)	08-6611
*	UNIMORPH W/WIRES, O'RING	40-0034
*	CAL COVER W/SCREWS	4363-200
*	HANDLE- PORTABLE (GRIP)	7363-139

Section 10

Drawings

Model Board Circuit, Drawing 367 × 166 (4 sheets)

Model Board Component Layouts, Drawings 367 × 167 (2 sheets)

Wiring Diagram, Drawing 367 × 174

Energy Response for Ludlum Model 19

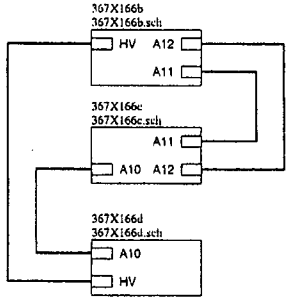

LUDLUM MEASUREMENTS, INC.
PO Box 810
501 Oak Street
Sweetwater, Texas 79556
U.S.A. 1-800-622-0828

Drawn: JK	04-MAR-04	Title: MAIN BOARD	
Design: DL	04-MAR-04	Model: M19	
Check:		Board#: 5367-166	
Approve:	31 Mar 04	Sheet: 1 of 4	Series 367 / Sheet 166
11:08:49	31-Mar-2004	Rev: 4.0	

367x166a.sch

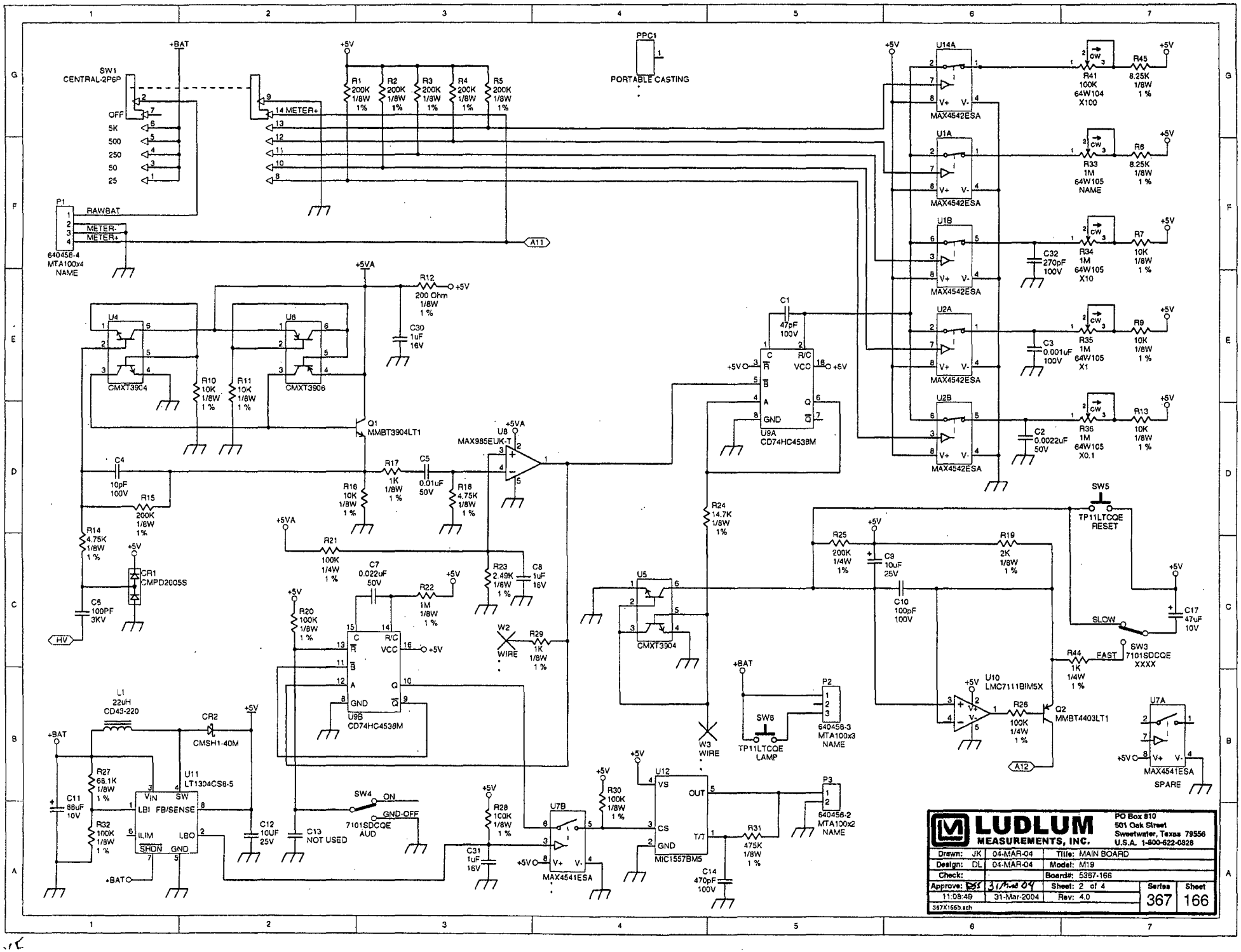
SW1
CENTRAL-2P6P
OFF
5K
500
250
50
25
+BAT
+5V
14 METER+
R1 200K 1/8W 1%
R2 200K 1/8W 1%
R3 200K 1/8W 1%
R4 200K 1/8W 1%
R5 200K 1/8W 1%
PPC1
PORTABLE CASTING
P1
RAWBAT
METER-
METER+
640456-4
MTA100x4
NAME
A11
U14A
U1A
U1B
U2A
U2B
MAX4542ESA
R41 100K 64W104 X100
R33 1M 64W105 NAME
R34 1M 64W105 X10
R35 1M 64W105 X1
R36 1M 64W105 X0.1
R45 8.25K 1/8W 1%
R6 8.25K 1/8W 1%
R7 10K 1/8W 1%
R9 10K 1/8W 1%
R13 10K 1/8W 1%
C32 270pF 100V
C3 0.001uF 100V
C2 0.0022uF 50V
+5VA
R12 200 Ohm 1/8W 1%
C30 1uF 16V
U4
U6
CMXT3904
CMXT3906
R10 10K 1/8W 1%
R11 10K 1/8W 1%
Q1 MMBT3904LT1
C1 47pF 100V
U9A
CD74HC4538M
U8
MAX985EUK-T
C4 10pF 100V
R15 200K 1/8W 1%
R14 4.75K 1/8W 1%
CR1 CMPD2005S
C6 100PF 3KV
HV
R17 1K 1/8W 1%
C5 0.01uF 50V
R16 10K 1/8W 1%
R18 4.75K 1/8W 1%
R21 100K 1/4W 1%
C7 0.022uF 50V
R22 1M 1/8W 1%
R20 100K 1/8W 1%
U9B
CD74HC4538M
R23 2.49K 1/8W 1%
C8 1uF 16V
W2 WIRE
R29 1K 1/8W 1%
R24 14.7K 1/8W 1%
W3 WIRE
U5
CMXT3904
SW5
TP11LTCQE
RESET
R25 200K 1/4W 1%
C9 10uF 25V
R19 2K 1/8W 1%
C10 100pF 100V
C17 47uF 10V
SLOW
SW3
7101SDCQE
XXXX
R44 1K 1/4W 1%
FAST
U10
LMC7111BIM5X
R26 100K 1/4W 1%
Q2 MMBT4403LT1
A12
U7A
MAX4541ESA
SPARE
P2
640456-3
MTA100x3
NAME
SW6
TP11LTCQE
LAMP
L1 22uH CD43-220
CR2 CMSH1-40M
U11 LT1304CS8-5
VIN SW LBI FB/SENSE ILIM LBO SHDN GND
R27 68.1K 1/8W 1%
R32 100K 1/8W 1%
C11 88uF 10V
C12 10UF 25V
C13 NOT USED
SW4
ON
GND-OFF
7101SDCQE
AUD
R28 100K 1/8W 1%
C31 1uF 16V
U7B
MAX4541ESA
R30 100K 1/8W 1%
U12
MIC1557BM5
VS OUT CS GND T/T
R31 475K 1/8W 1%
C14 470pF 100V
P3
640456-2
MTA100x2
NAME
LUDLUM MEASUREMENTS, INC.
PO Box 810
501 Oak Street
Sweetwater, Texas 79556
U.S.A. 1-800-622-0828
Drawn: JK 04-MAR-04
Title: MAIN BOARD
Design: DL 04-MAR-04
Model: M19
Check:
Board#: 5367-166
Approve:
Sheet: 2 of 4
11:08:49 31-Mar-2004
Rev: 4.0
Series 367
Sheet 166
367X166b.sch

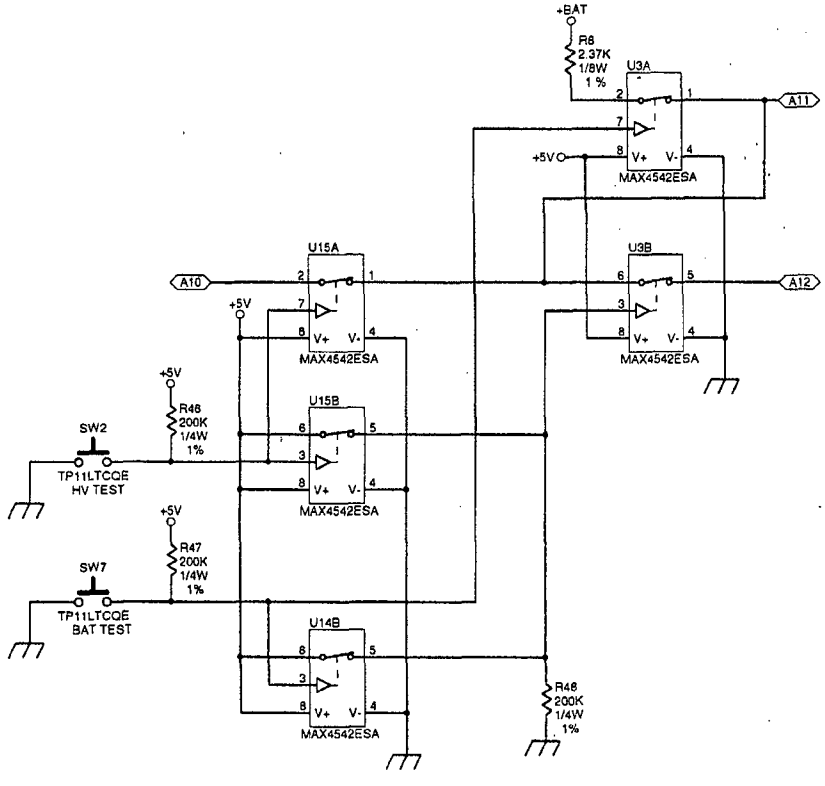

LUDLUM MEASUREMENTS, INC.			PO Box 810 501 Oak Street Sweetwater, Texas 79556 U.S.A. 1-800-622-0828		
Drawn: JK	04-MAR-04	Title: MAIN BOARD			
Design: DL	04-MAR-04	Model: M19			
Check:		Board#: 5367-166			
Approve:		Sheet: 3 of 4		Series	Sheet
11:08:50	31-Mar-2004	Rev: 4.0		367	166
367X166c.sch					

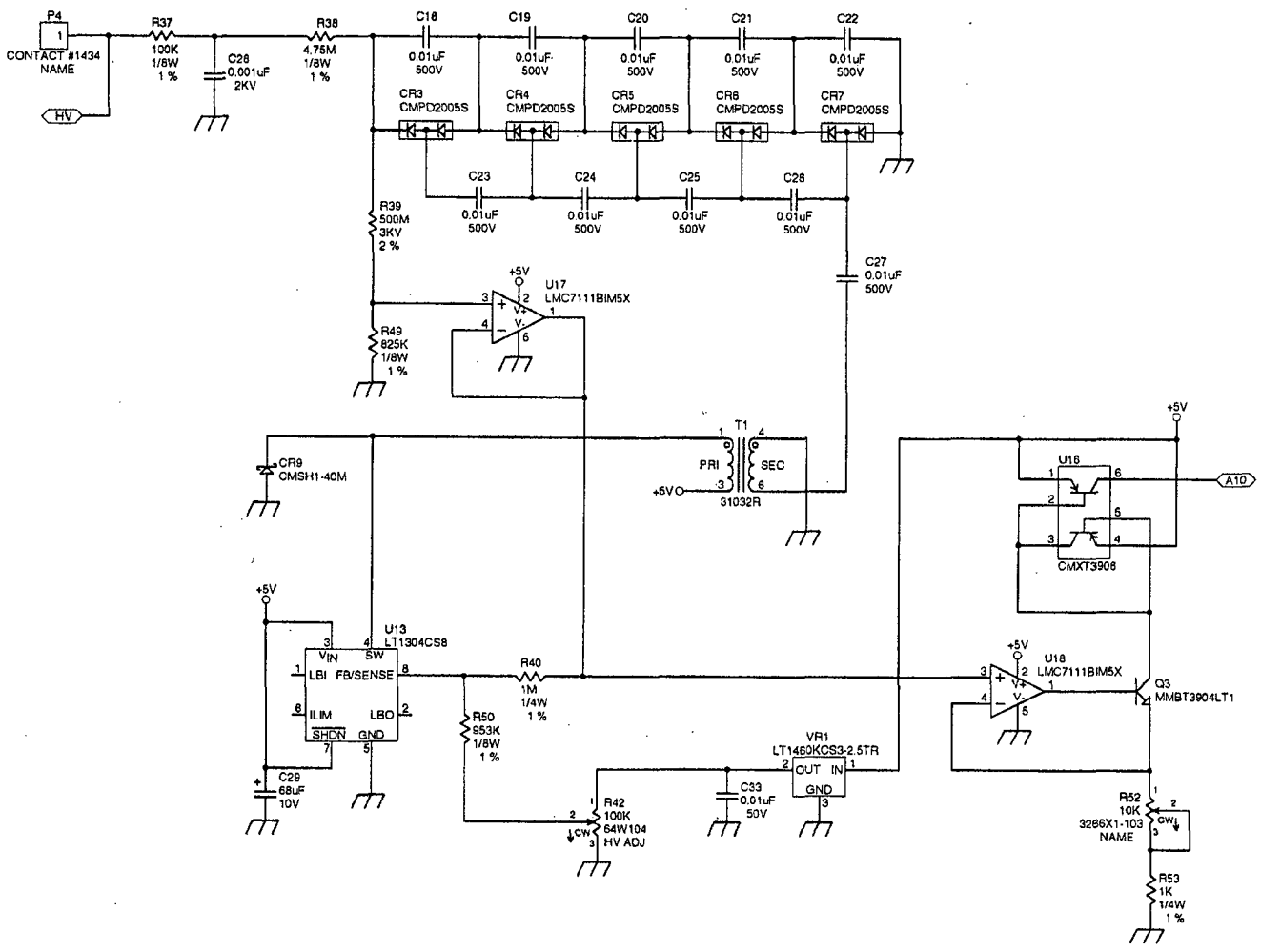

LUDLUM MEASUREMENTS, INC.

PO Box 810
501 Oak Street
Sweetwater, Texas 79556
U.S.A. 1-800-622-0828

Drawn: JK	04-MAR-04	Title: MAIN BOARD			
Design: DL	04-MAR-04	Model: M19			
Check:		Board#: 5397-155			
Approve: BJ	31Mar04	Sheet: 4 of 4		Series	Sheet
11:08:51	31-Mar-2004	Rev: 4.0		367	166
367X166d.sch					

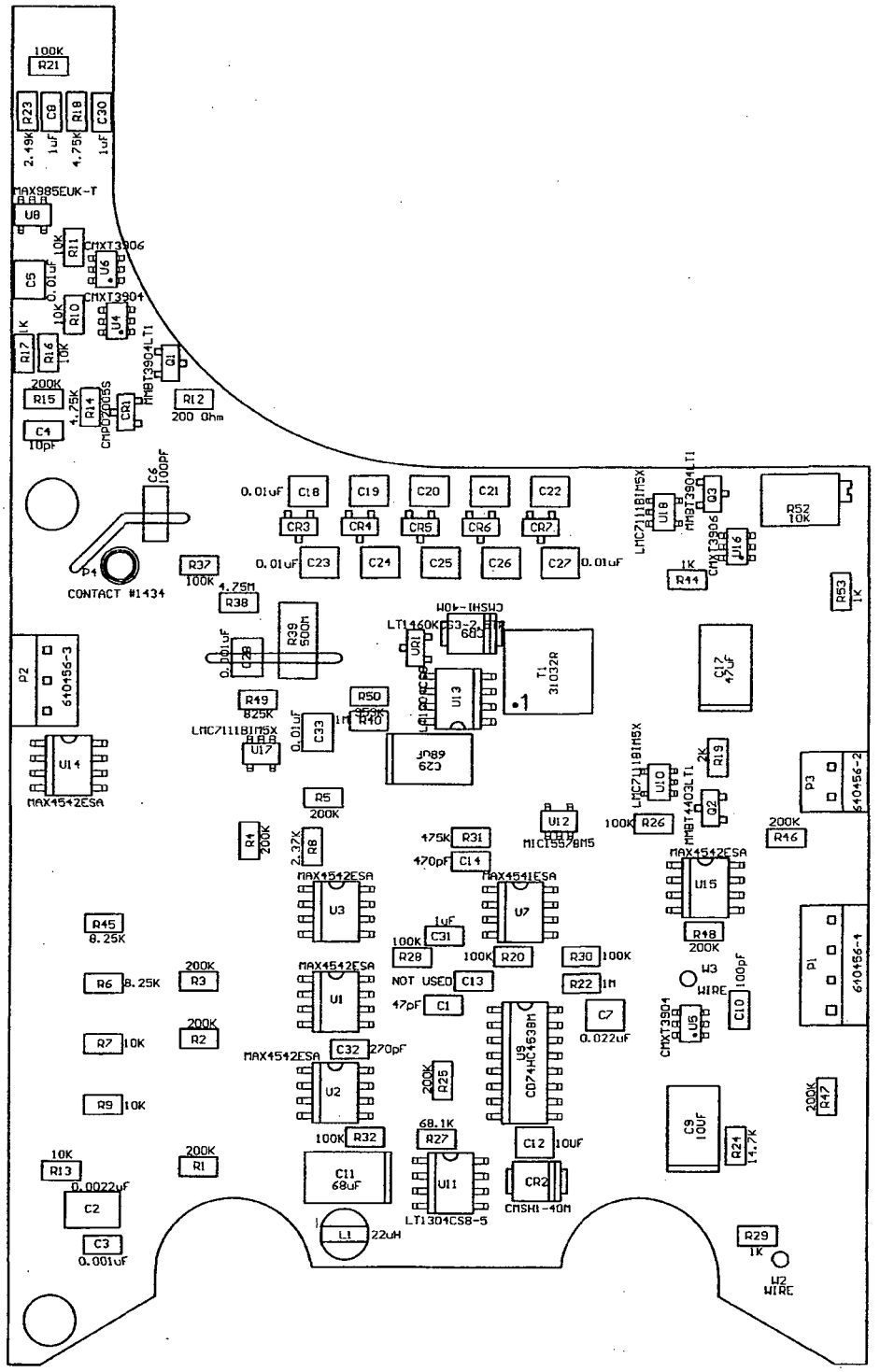

Drawn: JK	04-MAR-04	Title: MAIN BOARD			
Design: DL	04-MAR-04				
Check: DL	06-MAR-04	Model: M19			
Approve:		Board#: 5367-166			
Layer:		Rev: 4.0	Series	Sheet	
	14:46:39 6-Apr-2004	SCALE: 1.75	367	167	

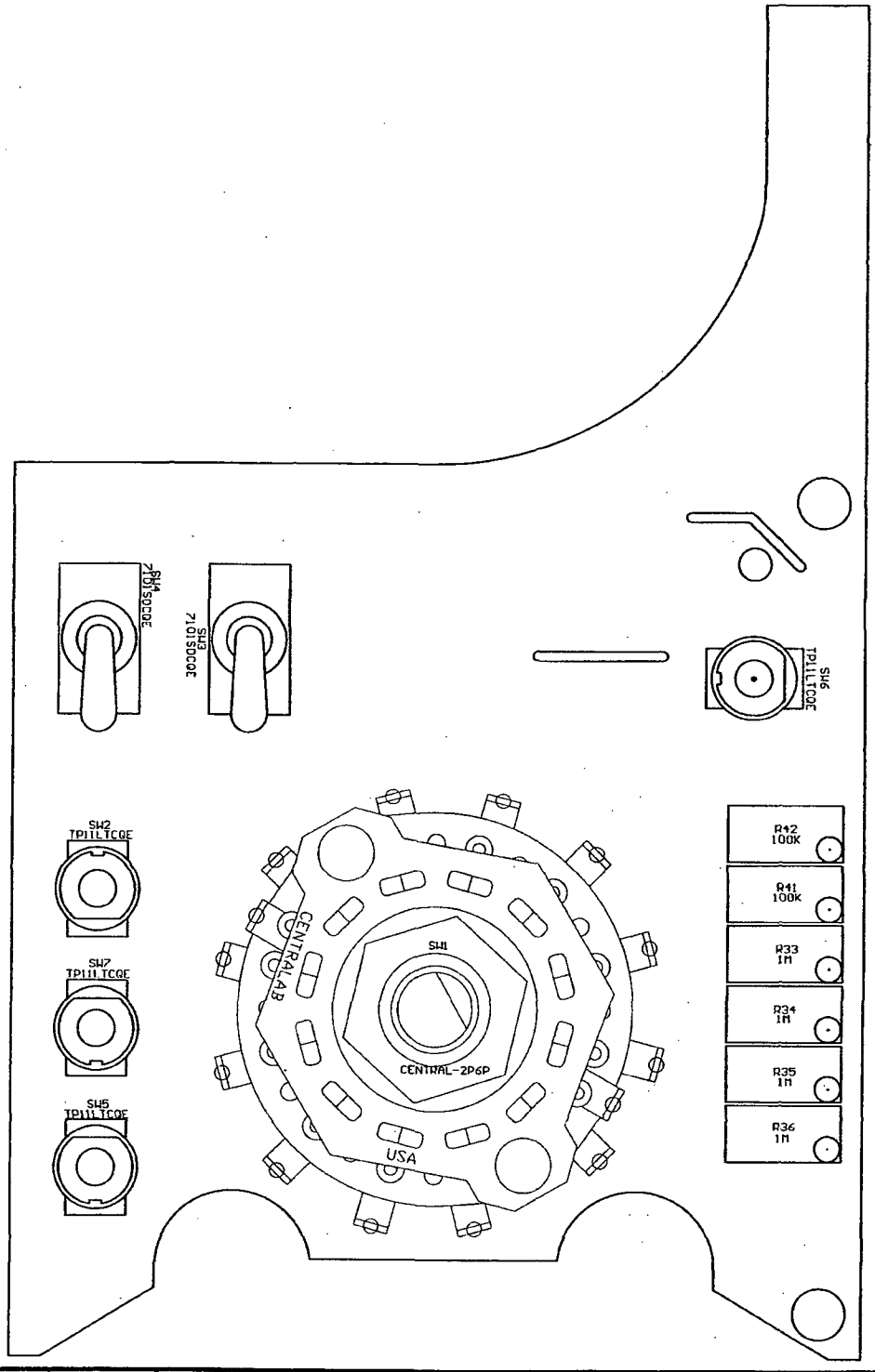

Drawn: JK	04–MAR–04	Title: MAIN BOARD			
Design: DL	04–MAR–04				
Check: DL	06-MAR-04	Model: M19			
Approve:		Board#: 5367–166			
Layer:		Rev: 4.0	Series	Sheet	
	14:46:40 6–Apr–2004	SCALE: 1.75	367	167	

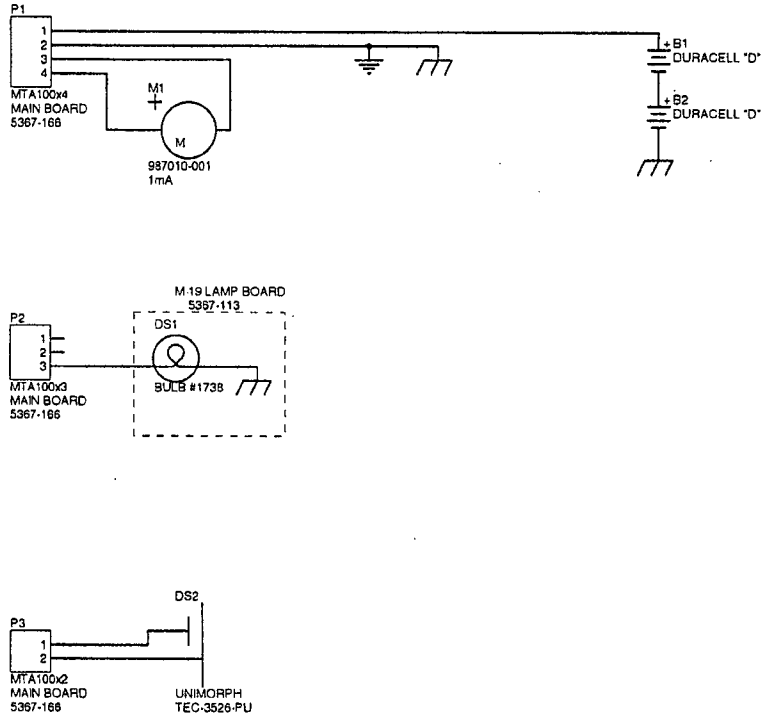

LUDLUM MEASUREMENTS, INC.

PO Box 810
501 Oak Street
Sweetwater, Texas 79556
U.S.A. 1-800-622-0828

Drawn: MEB	02-APR-04	Title: WIRING DIAGRAM	
Design: DL	02-APR-04	Model: 19	
		Board#: 367-174	
Approve: RJS	12 APR 04	Sheet: 1 of 1	Series 367 / Sheet 174
10:25:34	7-Apr-2004	Rev:	
367x174			

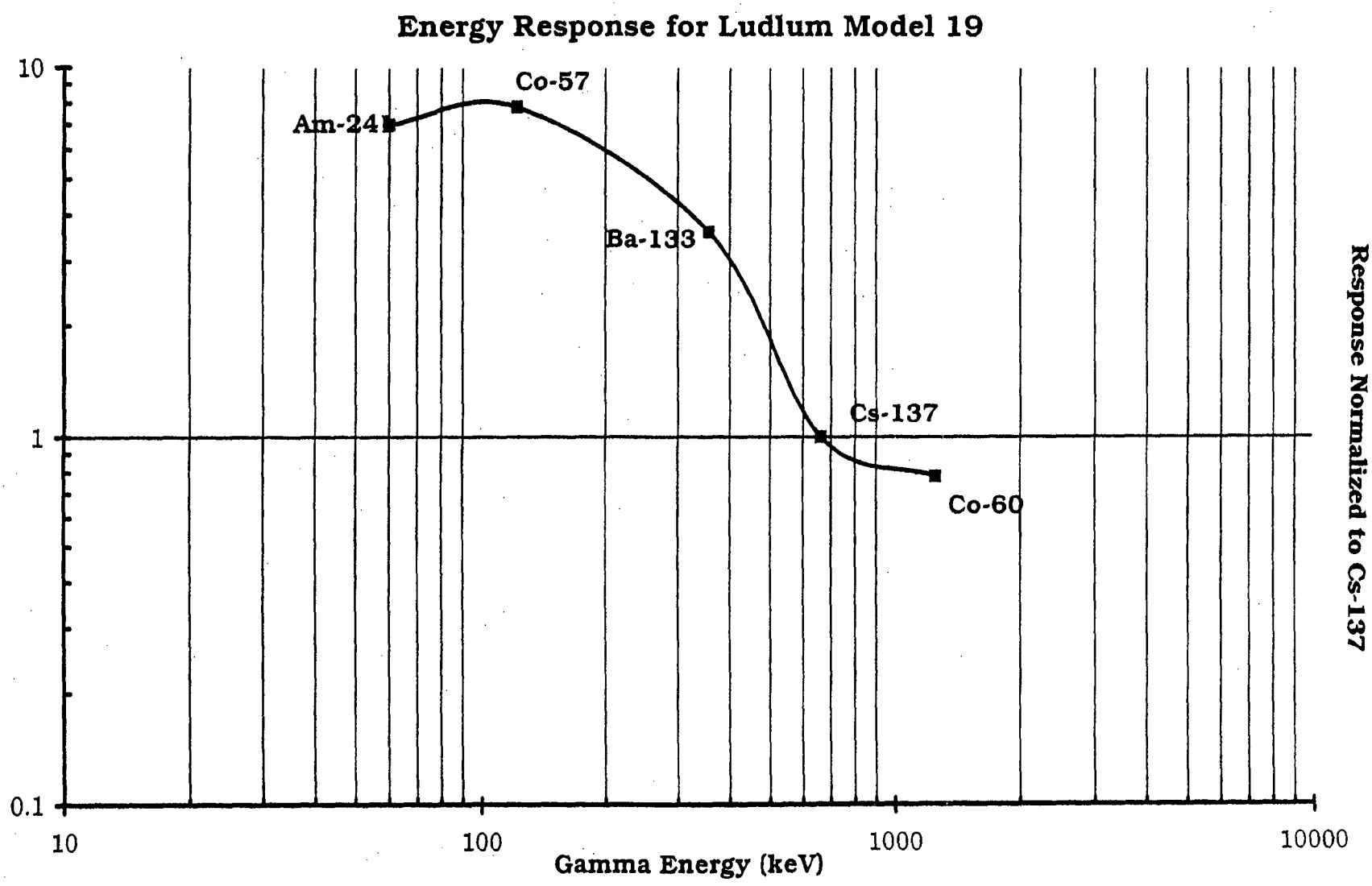
Energy Response for Ludlum Model 19
10
1
0.1
Am-241
Co-57
Ba-133
Cs-137
Co-60
10
100
1000
10000
Gamma Energy (keV)
Response Normalized to Cs-137

LUDLUM MODEL 2221
PORTABLE SCALER RATEMETER

Revised January 2002

Serial Number 161568 and
Succeeding Serial Numbers

LUDLUM MEASUREMENTS, INC.
501 OAK ST., P.O. BOX 810
SWEETWATER, TX 79556
915/235-5494 FAX: 915/235-4672

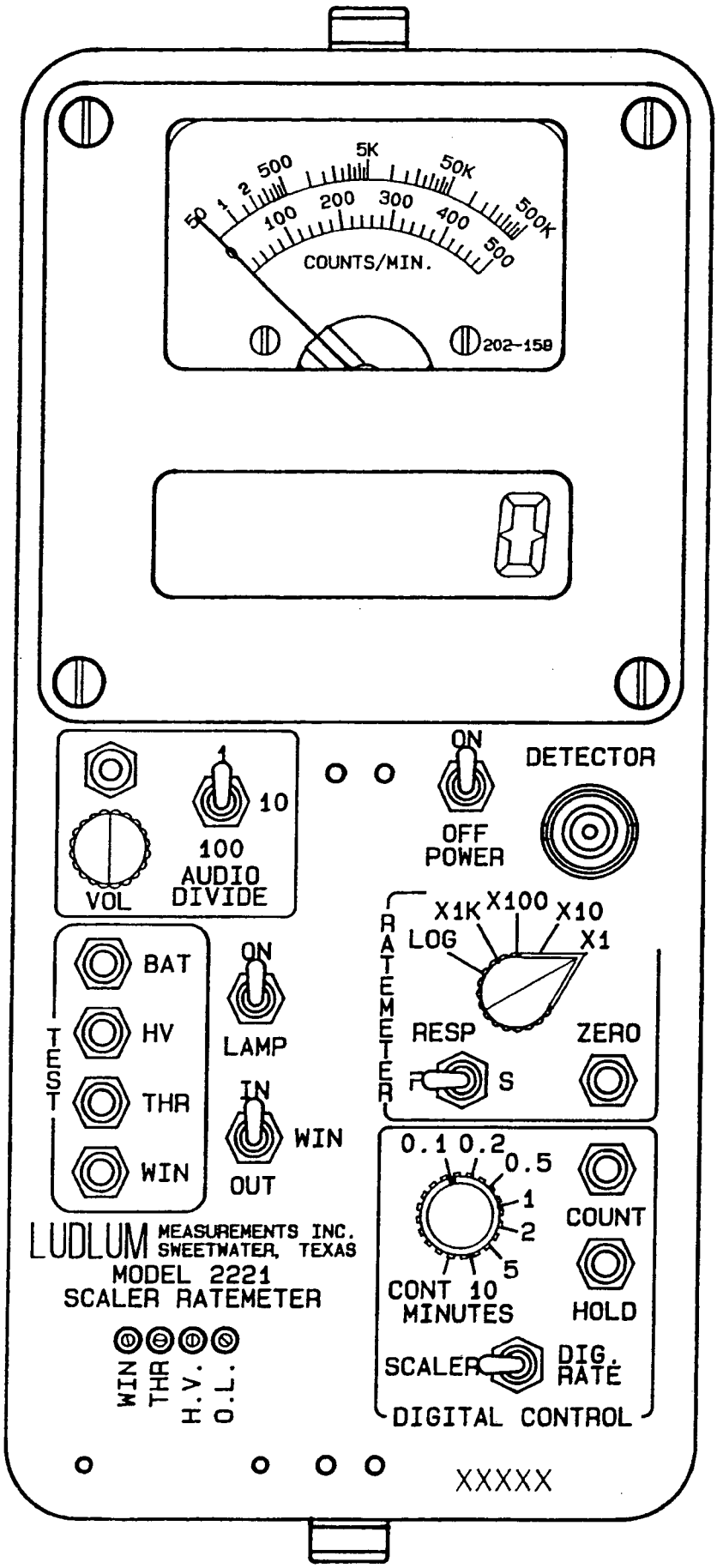

CHG	NO.				DWN	CHK	APP
DWN PW	DATE 5/31/88	CHK	DATE		APP	DATE	
TOL: SHOP STD ☐ OTHER				SCALE: FULL ☐ OTHER			
TITLE MODEL 2221 PORTABLE SCALER							
LUDLUM MEASUREMENTS, INC. 501 OAK STREET SWEETWATER, TEXAS 79556				SERIES 281		SHEET 74	

M2221 Portable Scaler Ratemeter
January 2002

TABLE OF CONTENTS

1. GENERAL 1

2. SPECIFICATIONS 1

3. DESCRIPTION OF CONTROLS AND FUNCTIONS 2
4. OPERATING PROCEDURES 4

   4.1 Initial Preparation 4
   4.2 Operating Point 4
   4.3 Limitation of Controls 4

5. DETERMINING INSTRUMENT PLATEAU AND SELECTING OPERATING POINT 5

6. WINDOW OPERATION AND ENERGY CALIBRATION PROCEDURES 5

7. OVERLOAD DETECTION CALIBRATION 6

8. CALIBRATION 6
   8.1 Ratemeter Calibration 6
   8.2 TEST Pushbutton/Display Calibration 7
   8.3 High Voltage Calibration 7
   8.4 Threshold/Gain Calibration 7

9. OVERHAUL PROCEDURE 8
   9.1 Amplifier/Power Supply Board 8
   9.2 Processor Board Checkout 9
   9.3 Functional/Chassis Checkout 11

PARTS LIST 13

   Amplifier/Power Supply Board, Drawing 261 X 56 13
   Processor Board, Drawing 261 X 91 15
   Calibration Board, Drawing 261 X 59 15
   LCD Display Board, Drawing 261 X 58 16
   Backplane Board, Drawing 261 X 60 16
   Chassis Wiring Diagram, Drawing 261 X 61 16

DRAWINGS AND DIAGRAMS 17

RS-232 PORT ADDITION ADDENDUM 18
   RS-232 Board, Drawing 261 X 179 19

1. GENERAL

The Ludlum Model 2221 Portable Scaler Ratemeter is a self-contained counting instrument designed for operation with scintillation, proportional or G-M detectors. Power is derived from four flashlight batteries.

The unit is complete with a voltage-sensitive preamplifier, linear amplifier, electronic timer, detector high-voltage power supply and detector overload detection circuitry.

A single channel analyzer is also featured in this unit for use in gamma spectrum analysis. The analyzer may be switched on or off, allowing gross or window counting.

The unit has a combination four-decade linear and log ratemeter and a six-digit LCD readout for the scaler and digital ratemeter. Potentiometers are supplied for threshold, window and high-voltage controls.

2. SPECIFICATIONS

- **HIGH VOLTAGE**: 200 to 2400 volts with digital readout

- **BATTERY COMPLEMENT**: four each "D" cell flashlight batteries

- **BATTERY LIFE**: approximately 250 hours with size D, alkaline batteries

- **CALIBRATION STABILITY**: less than 3% variance to battery endpoint

- **SENSITIVITY**: voltage-sensitive and adjustable from 1.5 mV to 100 mV; typically factory-calibrated to 10 mV = 100 on the THR display

- **INPUT IMPEDANCE**: 22k

- **READOUT**: 6 digit liquid crystal display, 0.5" (1.3cm) characters with backlight selection

- **METER**: 2 1/2-inch scale, 1 mA, pivot and jewel suspension

- **SCALES/RANGE**: four decade log ratemeter ranging from 50 to 500k CPM; four decade linear ratemeter - 0-500 CPM meter dial with range multipliers of X1K, X100, X10, X1 producing an overall range of 0-500k CPM

- **OPERATING TEMPERATURE**: 5-122°F (-15 to 50°C)

- **LINEARITY**: ±10% of the true value for the analog and digital ratemeter; ±2% of the true value for the digital Scaler, HV, THR, and WIN digital voltmeter readings; ±4% of the true value for the BAT voltmeter reading

- **RESPONSE**: 2 positions - Fast response = 4 ±1 second, Slow response = 22 ± 2 second; all response times are measured from 10-90% of final reading

- **CALIBRATION CONTROLS**: recessed screwdriver adjustments with calibration cover

- **AUDIO**: built-in unimorph speaker with click-per-event and switch selectable divide by 1, 10, and 100.

- **CONNECTOR**: Series "C"

- **SIZE**: 4.25" (10.8 cm)W X 10" (25.4cm) L X 9" (22.9cm) H including handle

3. DESCRIPTION OF CONTROLS AND FUNCTIONS

- **POWER**: Two-position switch to turn power to instrument on or off

- **DETECTOR**: series "C" connector for detector

  Input Impedance: 22k

  Ballast Resistor: 1M

- **RATEMETER**:

  - **F-S RESP Switch**: Two-position switch for selecting ratemeter response: F position 4 ±1 second; S position 22 ±2 seconds.

  - **ZERO**: when pressed, resets the ratemeter

  - **RANGE SELECTOR**: Five-position switch labeled LOG, X1K, X100, X10, X1 used to select the analog ratemeter range. The LOG position selects the upper meter scale to provide a four decade logarithmic reading from 50-500k CPM. The X1, X10, X100, and X1K range multipliers used with the lower 0-500 CPM meter scale providing and overall measuring range from 0-500k CPM. Multiply the meter reading by the respective range position.

- **DIGITAL CONTROL**:

  - **COUNT Pushbutton**: When pressed, resets and starts the counter. While the counter is counting, two colons on the display are turned on.
  - **HOLD Pushbutton**: When pressed, stops the counter and leaves the count in the display.

  - **SCALER/DIG RATE Toggle Switch**: Two-position toggle switch for selecting scaler or digital ratemeter

    SCALER Position: The display shows the counter contents.

    DIG. RATE Position: The display shows the ratemeter count rate.

    ✓ Note: The scaler and digital ratemeter are active even when not selected. This allows the user to start a timed count, switch to the Digital Ratemeter and then switch back to Scaler without having to restart the counter.

  - **MINUTES Selector Switch**: Eight-position switch used for selecting the count times for the Scaler:

POSITION	COUNT TIME IN MINUTES
0.1	0.1
0.2	0.2
0.5	0.5
1	1
2	2
5	5
10	10
CONT	

COUNTER COUNTS UNTIL HOLD IS PRESSED

- **CALIBRATION CONTROLS**:

  - **WIN**: 20-turn potentiometer used to adjust window width when the window toggle switch, WIN, is in the "IN" position

  - **THR**: 20-turn potentiometer used to adjust the Threshold

- **HV**: 20-turn potentiometer used to adjust detector voltage

- **O.L.**: 20-turn potentiometer used to adjust detector overload current

- TEST:

- **BAT Pushbutton Switch**: When pressed, displays the battery voltage in the digital display.

- **HV Pushbutton Switch**: When pressed, displays the detector high voltage in the digital display.

- **THR Pushbutton Switch**: When pressed, displays the Threshold setting in the digital display.

- **WIN Pushbutton Switch**: When pressed, displays the window setting in the digital display.

- **LAMP Toggle Switch**: Two-position switch to turn on the display lights.

- **WIN Toggle Switch**: Two- position switch for switching the window IN or OUT

IN position: The SCA is set up as a window counter.
OUT position: The SCA is set up as a gross counter.

- AUDIO:

- **VOL Control**: One-turn potentiometer used to adjust the volume of the speaker or headset.

- **AUDIO DIVIDE**:

"1" Position: provides 1 click per event
"10" Position: provides 1 click per 10 events
"100" Position: provides 1 click per 100 events

- **1/8" PHONE JACK**: Used for headset. When headset is plugged in, the unimorph on the can is disabled.

- **LIQUID CRYSTAL DISPLAY**: Six-1/2" high digits, displaying counter contents or digital count rate

- STATUS INDICATORS:

Counter Overflow: When in SCALER mode, the left digit alternates between the correct digit and an "H".

Detector Overload: The display flashes all dashes.

Battery: When the battery voltage is 4.4 volts or less, all decimal points are turned on.

Scaler Counting: The two colons are turned on when MINUTES selector switch is in CONT position.

4. OPERATING PROCEDURES

4.1 Initial Preparation

- Unscrew battery door latch.

- Install for "D" size batteries in the battery holder. The correct position of the batteries is indicated on the bottom of the battery door.

- Switch the POWER ON/OFF switch to the ON position. A random number will first be observed in the display, then 8.8:8.8:8.8. The third displayed number will be the program version. (At the time of this printing, program version is #261010.)

- Press COUNT pushbutton. The display should zero. Two colons should appear on the display.

- Press HOLD pushbutton. The colons should disappear.

- Switch LAMP toggle switch to the ON position. LCD display backlighting and two lamps at the bottom of the analog meter should be illuminated.

✓ NOTE: If the Lamp switch is left in the ON position for extended periods of time, battery life will decrease rapidly.

- Check TEST pushbutton functions for proper operation.

4.2 Operating Point

Instrument and detector operating point is established by setting the probe voltage (HV) and instrument sensitivity (THR). For a given detector system, efficiency, background and noise are fixed by the physical makeup of the detector and rarely vary from unit to unit. However, the selection of the operating point makes a marked difference in the apparent contribution of these three sources of count.

In the singular case of the G-M detector, a minimum operating voltage is required to establish the G-M operating region. (At lower voltages, the detector operates as a very insensitive proportional counter.) This detector is not capable of energy discrimination (pulse-height discrimination). The Threshold (THR) is typically adjusted to 550, with a THR reading of 100 = 10 mV input pulse, for G-M detectors.

For gain sensitive detectors (proportional or scintillation), the most straightforward method of selecting the operating point is to develop a graph, relating count rate to system gain. This relationship is commonly referred to as a plateau or instrument plateau curve. System gain may be changed by adjusting detector high voltage or THR control. The threshold is typically adjusted for 100 = 10 mV for scintillation detectors and 50 (5mV equivalent) on the THR readout for proportional detectors.

4.3 Limitation of Controls

HV Control provides a linear adjustment of the detector voltage supply. The range is approximately 0 to 2400 volts. Changing the detector voltage will cause the detector gain to change. It should be remembered that a linear change in voltage will cause an exponential change in detector gain. THR Control sets the basic pulse discrimination point of the scaler.

WIN Control is calibrated with the THR control so that the reading of the WIN control is equivalent to the reading of the THR control. As an example, 100 on the THR is equal to 100 on the WIN.

5. DETERMINING INSTRUMENT PLATEAU AND SELECTING OPERATING POINT

□ Set WIN ON/OFF to OFF.

□ Set MINUTES switch to 0.1 minutes.

□ Set THR control at 100.

□ With detector shielded from source, turn up high voltage control and take a plot of HV versus background count rate until the detector maximum voltage rating is reached. (Maximum voltage on most scintillation detectors is 1500-1600 Vdc; maximum voltage on proportional detectors is reached at the continuous discharge point. Return HV control to minimum.

□ Expose the detector to a source and again make a plot of voltage versus count.

□ Plot both sets of data and select the operating point to correspond with maximum source count and minimum background count. Avoid areas of very fast count rate changes with small changes in detector voltage. The optimum operating point for low background detectors is just above the inflection point (or break-over point) of the plateau curve. If background count is irrelevant, shift operating point to the plateau center for greater stability.

6. WINDOW OPERATION AND ENERGY CALIBRATION PROCEDURES

■ The following procedure calibrates threshold directly in keV.

□ Place RATEMETER multiplier switch to LOG position.

□ Unscrew and remove CAL cover.

□ Press HV pushbutton. The HV should read out on the display directly in volts. While depressing the HV pushbutton, turn HV potentiometer maximum counterclockwise. The HV should be less than 50 volts.

□ Depress the THR pushbutton. Turn the THR potentiometer clockwise until 652 displays.

□ With WIN IN/OUT switch IN, depress the WIN pushbutton. Turn the WIN potentiometer until 20 appears on the display.

□ Switch WIN IN/OUT to OUT.

□ Connect the probe and expose to Cs137 source.

□ Increase HV (if HV potentiometer is at minimum, it will take approximately 3 turns before any change is indicated). While increasing the HV, observe the log scale of the ratemeter. Increase HV until ratemeter indication occurs.

□ Switch WIN IN/OUT switch to IN.

□ Turn the HV control until maximum reading occurs on the log scale. Increase HV until reading starts to drop off, then decrease the HV for maximum reading.

□ Turn RATEMETER selector switch to the X1K position.

□ Press ZERO pushbutton and release. If meter does not read, switch to a lower range until a reading occurs.

□ Carefully adjust HV potentiometer until maximum reading is achieved on the range scale. The instrument is now peaked for Cs137 on both the LOG and Linear scales.

✓ NOTE: When the THR control is adjusted, the effective window width remains constant. As an example, if the THR is set at 612, the WIN at 100, a 662 keV peak 612 + (100 divided by 2) will be centered in the window. Then the threshold point is equivalent to 612 keV with a 100 keV window and calibrated for 100 keV per turn. Now if the threshold is reduced to 250, the threshold is equivalent to 250 keV, but the window (100) is still equal to 100 keV. Proportionally, this represents a broader window.

7. OVERLOAD DETECTION CALIBRATION

■ Detector Count Saturation is detected in this instrument and is indicated by the LCD display flashing all dashes and the analog ratemeter deflecting full scale. The count saturation or "overload" point is calibrated by the O.L. front panel control.

□ Adjust the O.L. control to fully clockwise position.

□ Connect detector and set HV for correct detector operating voltage.

□ Expose detector to radiation field and while observing ratemeter, increase field intensity until a decrease in count rate is noticed. For alpha scintillators, the detector photomultiplier tube (PMT) should be exposed to a small light leak through the probe face to establish the detector saturation point.

□ With the detector in the count saturation field, adjust the O.L. control counterclockwise until the overload alarm point is reached (flashing dashes in LCD display).

□ Position detector in a lower field intensity just below the saturation point and confirm overload is defeated.

Example: Ludlum Model 44-9 GM pancake detector saturates at approximately 500 mR/hr (5mS/h).

□ Full scale instrument analog meter reading=200 mR/hr (2 mS/h). Set the Model 2221 to overload at 500 mR/hr (5 mS/h) field, then position detector in a 300 mR/hr (3 mS/h) field and confirm that overload alarm is defeated. The O.L. control will have to be "fine adjusted" to perform the above procedure.

8. CALIBRATION

■ Refer to schematic and component layout for the following calibration.

8.1 Ratemeter Calibration

□ Connect Frequency counter to pin 18 of U22 (80C51FA) on Processor board, #5261-073. Confirm crystal frequency is 6 MHz ±0.1% (6,006 khz-5,994 kHz).

□ Set THR control to 100 and Window IN/OUT switch to the OUT position.

☐ Connect Ludlum Model 500 Pulser or equivalent and adjust count rate for 40,000 CPM.

☐ Switch Ratemeter Multiplier switch to the X100 position and the Response switch to "F."

☐ Adjust pulse amplitude above threshold until a steady count rate is observed on ratemeter.

☐ Adjust R40 Meter Cal (labeled MCAL) on Processor board, for 40,000 CPM on meter.

☐ Switch SCALER/DIG RATE switch to the SCALER position.

☐ Confirm counter time operation by taking 0.1 minute count. Colons should be observed during count cycle.

8.2 TEST Pushbutton/Display Calibration

☐ Adjust THR control to fully clockwise position.

☐ Connect positive voltmeter lead to pin 7 of U3 (TLC27M7IP) on the Amp./P.S. board. Connect negative lead to ground near U3.

☐ Press the THR test pushbutton and adjust R171 Volt Cal (labeled "V"), so that the front panel display reading corresponds to the voltmeter reading at pin 7 of U3.

8.3 High Voltage Calibration

☐ Connect HV meter (2500 Megohm input impedance or greater) to the junction of R32 (4.7 Meg) and R33 (1 Meg) on Amp/P.S. board.

☐ While pressing the HV Test pushbutton, adjust the HV front panel control until the display reads 1500.

☐ Adjust R175 HV Cal on Amp/P.S. board for 1500 ±5 volts on external HV meter.

☐ Confirm HV will adjust from 50 to 2400-2500 volts. Insure HV displayed reading tracks within 2% of HV output.

8.4 Threshold/Gain Calibration

☐ Set pulser pulse amplitude to 10mV.

☐ With THR set at 100, on display, fine adjust R174 Gain control (on P.S. board) until ratemeter reads 30,000 CPM with 40,000 CPM from pulser.

☐ Adjust THR control for readings of 200, 300, 400, and 500 to insure the pulser input is 20, 30, 40 and 50mV respectively. Use the 3/4 CPM input setting to discriminate turn on points as in procedure above.

☐ Adjust THR control back to 100.

☐ Switch Window IN/OUT switch to the IN position. Adjust WIN control for 100, 200, 300, 400 and 500 to confirm 20, 30, 40 and 50mV window cut off points.

☐ Set WIN back to 100 and OUT position.

☐ Check the rest of the front panel functions for proper operation.

9. OVERHAUL PROCEDURE

■ The checkout below can be performed with boards in instrument. An extender board (part no. 5261-098) is available if better access to board components is necessary.

9.1 Amplifier/Power Supply Board

□ Connect L.V. power supply to Model 2221 and plug in Amp/P.S. board. (component side to back of instrument).

□ Adjust the WIN, THR and O.L. front panel controls to maximum clockwise position. Turn HV control to maximum counterclockwise position. Switch the lamp switch to the OFF position. Window IN/ OUT switch to the OUT position.

□ Adjust input voltage for approximately +4 Vdc and turn instrument to the ON position. Battery current should be approximately 30 mA or less.

□ Confirm pin 8 of U7 (CA3290A) is equal to or greater than +6.4 Vdc.

□ Increase supply voltage to approximately +5 Vdc and pin 8 of U7 should increase to +9 ±1 Vdc.

□ Check for +5 ±0.15 Vdc at pin 8 of any of the TLC27M7IP's.

□ Check for -6.5 ±0.5 Vdc at pin 4 of any of the same TLC27M7IP's.

□ Connect subminax wire from detector input to Amp/P.S. board.

□ Connect HV meter to detector input and adjust front panel HV control to fully clockwise position.

□ Adjust the HV front panel control to the fully clockwise position. Then adjust R175 HV CAL for approximately 2400-2450 Vdc. Decrease front panel HV control to the fully counterclockwise position and confirm that HV output is 50 volts or less. Then set HV for approximately 1000 Vdc.

□ Connect voltmeter to pin 1 of U3 (TLC27M7IP).

□ With HV output set at approximately 1000 volts adjust R176 Current Cal (labeled "O") for approximately 0.1 Vdc at pin 1 of U3.

□ Connect Overrange Simulator (needs to have a 1000 meg resistor) to detector input and confirm pin 1 of U3 increases to approximately 0.15 ±0.01 Vdc.

□ Connect voltmeter to pin 1 of U2 (LM358) and with Overrange Simulator connected, adjust O.L. control on the front panel counterclockwise until the voltmeter reads approx +0.5 Vdc. Disconnect Simulator and confirm pin 1 of U2 goes above +3 volts.

□ Turn O.L. control to its maximum clockwise position.

□ Connect positive voltmeter lead to pin 7 of U3 (TLC27M7IP) and connect negative lead to ground close to U3.

□ Press the WIN test pushbutton and confirm pin 7 of U3 is approximately 2.7 to 3.8 volts.

□ Press THR test and confirm pin 7 is 1.23 ±0.02 Vdc.

□ Press BAT test pushbutton and confirm pin 7 is approximately 0.5 with supply voltage at +5 Vdc.

□ With the HV still set at 1000 Vdc, pin 7 of U3 should be approximately 1 ±0.1 Vdc while pressing the HV test pushbutton.

□ Connect oscilloscope to pin 3 of U5 (LM331) and adjust R171 Volt Cal (labeled "V") for approximately 2 khz (0.5 millisecond period) with the HV pushbutton pressed.

□ Connect voltmeter to pin 7 of U3 and while pressing the THR test pushbutton, adjust THR control for approximately +0.1 Vdc.

□ Switch the Window IN/OUT switch to the IN position. While pressing the WIN test pushbutton, adjust the WIN control for approximately +0.1 Vdc at pin 7 of U3 also. Then switch the Window to the OUT position.

□ Connect oscilloscope to pin 2 of U8 (CA3096).

□ Connect pulser and set pulse amplitude for approximately 10 millivolts. Set CPM to 40,000.

□ Adjust R174 Gain (labeled "G") to maximum clockwise position and confirm positive pulses at pin 2 of U8 are approximately 1 ± 0.1 volt in amplitude.

□ Connect oscilloscope to pin 10 of U105 (CD4098).

□ Adjust R174 Gain until pulses just start to appear at pin 10 of U105. Then adjust pulser amplitude until pulses are clearly visible.

□ Adjust R173 T Pulse (labeled "T") for a 2.5 microsecond positive pulse width at pin 10 of U105.

□ Connect oscilloscope to pin 7 of U105 and adjust R172 Width (labeled "W") for a 3 microsecond negative pulse width.

□ Switch the Window IN/OUT switch to the IN position and verify that the pulses are present at pin 7 of U105 from 10 to 20 mV input pulse amplitude and off above approximately above 20 mV.

□ Switch Window IN/OUT switch to the OUT position and verify the pulses appear above the window limit as in the above step.

□ Battery current should be less than 30 mA with +5 Vdc supply input.

9.2 Processor Board Checkout

■ The procedure below is to be used without the Amp/P.S. board. If the Amp/P.S. board is used, delete the steps containing the signal generator use. Use the pulser for the standard count rate inputs. Window, Threshold, HV and Bat test will display the control setting.

□ Plug in Amp/P.S. Simulator board and connect Signal Generator to jumper wires (black= probe ground).

□ Plug in Processor board, component side toward back of instrument. Connect display ribbon cable.

□ c. Set Signal Generator to square wave function.

Range= 10k and all other switches to the OUT position.

□ Adjust the Freq. Symmetry, Amplitude and D.C. Offset controls to achieve a 5 volt negative pulse with a pulse width of approximately 50 microseconds and a period of approximately 1.2 milliseconds.

□ With supply voltage set at +5 ±0.15 Vdc, turn instrument ON and observe display= 8.8:8.8:8.8 for approximately 2

seconds, then 261010 indicating the program number.

☐ Connect Frequency Counter to pin 18 of U22 (80C51FA) and confirm crystal frequency is 6 Mhz ±0.1% (6,006 khz-5,994 khz).

☐ Switch the Scaler/Dig. Rate Switch to the Dig Rate position.

☐ Counts should start accumulating every 2 seconds until approximately 50,000 CPM is observed. (The symmetry control can be fine adjusted until 50,000 CPM is achieved). At this displayed count rate, the low BAT Test indication should be observed, indicated by 5 decimal points across the bottom of the display.

☐ Press BAT Test and display should be 4.1 ±0.2.

☐ Press HV and WINDOW= 410 ±20. Threshold pushbutton has no effect without Amp/P.S. plugged in.

☐ Switch Ratemeter Response time to F.

☐ Switch Ratemeter multiply to X100.

☐ Adjust R40 Meter Cal, (labeled MCAL), until Ratemeter matches displayed accumulated count (approximately 50,000 CPM).

☐ Decade the Multiplier range on the Signal Generator to correspond to each decade on Rate Multiplier to confirm range switch operation.

☐ Connect Voltmeter to recorder output and confirm R41 RCDR CAL, (labeled RCAL), will adjust from 0 to approximately 3.7 Vdc, with full scale CPM on display and ratemeter. Then set for 1 Vdc to equal full scale meter deflection.

☐ Connect Oscilloscope to pin 9 of U10 (ICM7556) and decade Sweep Generator down to the 1k range.

☐ Switch the Audio Divide switch between the 1, 10, and 100 positions to confirm Audio frequency divides or multiplies by 10, between each position.

☐ Connect Headset or unimorph and confirm volume control operation.

☐ With full scale meter deflection (500), check F/S response time (90% full scale) for 4.5 ±0.5 seconds and 22 ±2 seconds respectively.

☐ Check Count, Hold, and Zero pushbutton functions.

☐ Switch Scaler/Dig. Rate switch to the Scaler position and check the 0.1, 0.2 and 2 minute time multipliers for correct time operation.

☐ With +5 volts supply input, battery current should be less than approximately 15 mA, with full scale meter deflection.

9.3 Functional/Chassis Checkout

☐ This procedure requires a checked-out Amp/P.S. board and Processor board.

☐ Connect one lead of an ohmmeter to chassis ground.

☐ Connect other lead of ohmmeter to the Processor board cinch connector pins below to check count time switch operation. Boards are not plugged in yet.
1 = open
0 = shorted

COUNT TIME POSITION	PROCESSOR BOARD CINCH CONNECTOR PIN 8	30	31
0.1	0	0	0
0.2	0	0	1
0.5	1	0	0
1	1	0	1
2	0	1	0
5	0	1	1
10	1	1	0
CONT	1	1	1

Connect external power supply and set input voltage for approximately +5 Vdc.

☐ Turn Lamp switch to the OFF position. THR and O.L. controls to maximum clockwise position and HV to maximum counterclockwise position.

☐ Plug in Processor and Amp/P.S. boards and related cable connections.

☐ Turn instrument ON. Current draw should be less than 45 mA.

☐ Confirm display reads 8.8:8.8:8.8 for approximately 2 seconds, then 261010 indicating the program version.

☐ Connect positive voltmeter lead to pin 7 of U3 (TLC27M7IP) on the Amp./P.S. board. Connect negative lead to ground near U3.

☐ With the THR control full clockwise, press the THR test pushbutton and adjust R171 Volt Cal (labeled "V"), so that the front panel display reading corresponds to the voltmeter reading at pin 7 of U3.

☐ Connect HV meter (2500 Megohm input impedance or greater) to the junction of R32 (4.7 Meg) and R33 (1 Meg) on P.S. board.

☐ While pressing the HV Test pushbutton, adjust HV control until the display reads 1500. R176 Current Cal may have to be adjusted counterclockwise to defeat the Overrange function.

☐ Adjust R175 HV Cal on Amp/P.S. board for 1500 ±5 on external HV meter.

☐ Confirm HV will adjust from 50 to 2400-2500 volts. Insure HV displayed reading tracks within 2% of HV output.

☐ Adjust HV for approximately 1000 volts.

☐ Adjust R176 Current Cal (labeled "0") for approximately 0.1 volt at pin 1 of U3 (TLC27M7IP) on Amp/P.S. board.

☐ Connect Overrange Simulator (1000 megohm) to the detector input.

☐ Adjust the O.L. control counterclockwise until hyphens start flashing across display every other count interval. Disconnect Overrange Simulator and confirm overrange function is defeated. Then adjust to fully clockwise position.

☐ Set THR control to 100 and Window IN/OUT switch to the OUT position.

☐ Connect pulser and adjust count rate for 40,000 CPM.

☐ Switch Ratemeter Multiplier switch to the X100 position and the Response switch to "F."

☐ Adjust pulse amplitude above threshold until a steady count rate is observed on ratemeter.

☐ Adjust R40 Meter Cal (labeled MCAL) on Processor board, for 400 CPM on meter.

☐ Adjust pulser for 10,000 CPM and check meter for ±10% linearity of reading. Adjust pulser and rate Multiplier switch to confirm linear readings on all ranges.

☐ Switch SCALER/DIG. RATE switch to the SCALER position.

☐ Confirm count time switch operation by taking a 0.1 minute and 0.5 minute count. Colons should be observed during count cycle.

☐ Check HOLD and ZERO pushbutton functions.

☐ Switch SCALER/DIG. RATE switch to the DIG. RATE position and confirm update count display operation approximately every 2 seconds.

☐ Connect unimorph and headset to the audio outputs and confirm audio divide and volume control functions. NOTE: Unimorph should shut off when headset is connected.

☐ With the THR control adjusted for 100, adjust R174 Gain (labeled G) for 1.5 millivolt input sensitivity. Insure instrument functions at low input sensitivity without "noise".

☐ Instrument may have to be placed in can to permit "noise free" operation.

☐ Set pulser pulse amplitude to 10mV.

☐ With THR still set at 100, fine adjust R174 Gain control until ratemeter reads 30,000 CPM with 40,000 CPM from pulser.

☐ Adjust THR control for readings of 200, 300, 400, and 500 to insure the pulser input is 20, 30, 40 and 50mV respectively. Use the 3/4 CPM input setting to discriminate turn on points as in procedure above.

☐ Adjust THR control back to 100.

☐ Switch Window IN/OUT switch to the IN position. Adjust WIN control for 100, 200, 300, 400 and 500 to confirm 20, 30, 40 and 50mV window cut off points.

☐ Set WIN back to 100 and OUT position for instrument shipment.

☐ Input a full-scale ratemeter count rate (500 CPM) and connect voltmeter to the recorder output. Adjust R41 (labeled RCAL) on Processor board for 1 volt.

☐ Check F/S ratemeter response time for 4.5 ±0.5 and 22 ±2 seconds at 90% of full scale.

☐ Decrease input supply voltage until periods are observed at bottom of display. Press BAT Test pushbutton and confirm low BAT Test is 4.4 ± 0.1 Vdc. Adjust supply voltage back to 5 volts and confirm BAT test and actual supply input is 5 ±0.05 Vdc.

☐ Switch SCALER/DIG. RATE switch to the SCALER position. Count Time Multiplier to CONT. Press count pushbutton and start with low enough count rate to observe each digit number count sequence from Least significant digit to MSD. Decade pulser count rate to speed up digit segment display check.

☐ Increase count rate enough to overflow counter. An "H" should be observed in the MSD flashing every count interval.

☐ Turn Lamp switch to the ON position and confirm 2 lamps in the display and 2 lamps below the meter are illuminated.

☐ Current draw with lamps on should be 210 ±20 mA.

☐ Turn lamp OFF and current should be approximately 40 ±5 mA.

PARTS LIST

Ref. No.	Description	Part No.
	Model 2221 Portable Scaler Ratemeter	
UNIT	Completely Assembled Model 2221 Portable Scaler Ratemeter	48-2065
	Amplifier/Power Supply Board, Drawing 261 X 56	
BOARD	Assembled Board	5261-072
•	**CAPACITORS**	
C107	1µF, 35V, DT	04-5575
C108	2.2µF, 25V, DT	04-5559
C109	4.7µF, 10V, DT	04-5578
C110	4.7µF, 10V, DT	04-5578
C111	100µF, 10V, DT	04-5576
C112	4.7µF, 10V, DT	04-5578
C114	10pF, 100V, C	04-5573
C115	0.1µF, 100V, C	04-5521
C116	0.1µF, 100V, C	04-5521
C117	0.1µF, 100V, C	04-5521
C118	0.1µF, 100V, C	04-5521
C120	0.0022µF, 100V, P	04-5580
C121	0.001µF, 100V, C	04-5519
C122	0.1µF, 100V, C	04-5521
C123	100pF, 100V, C	04-5527
C124	0.1µF, 100V, C	04-5521
C125	0.01µF, 100V, C	04-5523
C126	47pF, 100V, C	04-5533
C127	0.1µF, 100V, C	04-5521
C128	47pF, 100V, C	04-5533
C129	100pF, 100V, C	04-5527
C130	10pF, 100V, C	04-5573
C131	0.1µF, 100V, C	04-5521
C132	10pF, 100V, C	04-5573
C133	0.0015µF, 3kV, C	04-5518
C135	0.0015µF, 3kV, C	04-5518
C136	0.0015µF, 3kV, C	04-5518
C137	100pF, 3kV, C	04-5532
C138	100pF, 3kV, C	04-5532
C139	0.0056µF, 3kV, C	04-5522
C140	0.0056µF, 3kV, C	04-5522
C141	0.0056µF, 3kV, C	04-5522
C145	1µF, 35V, DT	04-5575
C146	100µF, 10V, DT	04-5576
C147	100µF, 10V, DT	04-5576
C148	10µF, 20V, DT	04-5592
C154	0.0015µF, 3kV, C	04-5518
C164	0.1µF, 100V, C	04-5521
C165	0.1µF, 100V, C	04-5521
•	**TRANSISTORS**	
Q142	2N3904	05-5755
Q143	MPSU51	05-5765
•	**INTEGRATED CIRCUITS**	
U1	TLC27M7	06-6248
U2	LM358	06-6024
U3	TLC27M7	06-6248
U4	TLC27M7	06-6248
U5	LM331	06-6156
U6	LM2578	06-6223
U7	CA3290AE	06-6140
U8	CA3096	06-6023
U9	CA3096	06-6023
U105	CD4098	06-6066
U106	CA3096	06-6023
U144	CD4052	06-6141
•	**DIODES**	
CR10	IN5819	07-6306
CR12	MR-250-2	07-6266
CR13	MR-250-2	07-6266
CR14	MR-250-2	07-6266
CR15	MR-250-2	07-6266
CR16	1N4148	07-6272
CR17	1N4148	07-6272
CR18	1N4148	07-6272
CR19	1N4148	07-6272
CR20	1N4148	07-6272
CR21	1N4148	07-6272
CR22	1N4148	07-6272
CR24	1N5819	07-6306
CR25	1N5819	07-6306
CR151	MR-250-2	07-6266
CR177	1N5252	07-6265
•	**RESISTORS**	
R32	4.7M	10-7030
R33	1M	10-7028
R34	1M	10-7028
R35	1G	12-7686
R36	1G	12-7686
R37	0.1 OHM, 1%	12-7647

Ref. No.	Description	Part No.
R38	10k	12-7748
R39	1M, 1%	12-7763
R40	10k	12-7748
R41	10k	12-7748
R42	10k	12-7748
R43	10k	12-7748
R44	47k	12-7758
R45	4.7k	12-7755
R46	10k	12-7748
R47	10k	12-7748
R48	10k	12-7748
R49	1k	12-7750
R50	220 OHM	12-7753
R51	220 OHM	12-7753
R52	470k	12-7757
R53	47k	12-7758
R54	1k	12-7750
R55	10k	12-7748
R56	4.7k	12-7755
R57	10k	12-7748
R58	10k	12-7748
R59	10k	12-7748
R60	1k	12-7750
R61	178k, 1%	12-7769
R62	4.7k	12-7755
R63	100k	12-7747
R64	10k	12-7748
R65	10k, 1%	12-7764
R66	220 OHM	12-7753
R68	10k	12-7748
R69	1.5k	12-7773
R70	100k, 1%	12-7765
R71	200k	12-7752
R72	200k	12-7752
R73	100k	12-7747
R74	100k	12-7747
R78	22k	12-7754
R79	10k	12-7748
R80	10k	12-7748
R81	100k	12-7557
R82	200k	12-7752
R83	22k	12-7754
R84	10k	12-7748
R85	1M	12-7763
R86	4.42k	12-7760
R87	47 OHM	12-7756
R88	100k, 1%	12-7765
R89	17.8k	12-7759
R90	10k,1%	12-7764
R91	1M, 1%	12-7763
R92	1M, 1%	12-7763
R93	40.2k, 1%	12-7761
R94	100 OHM	12-7746
R95	10k	12-7748
R96	1M, 1%	12-7763
R97	10M	12-7749
R98	1M	12-7751
R99	470k	12-7757
R100	470k	12-7757
R101	100k	12-7747
R102	1M, 1%	12-7763
R171	10k TRIMMER	09-6822
R172	100k TRIMMER	09-6823
R173	100k TRIMMER	09-6823
R174	10k TRIMMER	09-6822
R175	1M TRIMMER	09-6828
R176	1M TRIMMER	09-6828

- **TRANSFORMERS**

T103	M2300 HVPS	4275-037
T104	M2221 LVPS	4275-094

- **MISCELLANEOUS**

9 EA.	CLOVERLEAF RECEPTACLES	
	011-6809-00	18-8771
3 EA.	SPACERS	18-8933
*	TRANSISTOR SPACER	18-8992
*	AMPLIFIER SHIELD	7261-100

Processor Board, Drawing 261 X 91

BOARD	Assembled Board	5261-136

- **CAPACITORS**

C1	47pF, 100V, C	04-5533
C2	0.047µF, 100V, C	04-5565
C3	0.001µF, 100V, C	04-5519
C4	27pF, 100V, C	04-5614
C5	27pF, 100V, C	04-5614
C6	22µF, 15V, DT	04-5579
C7	10µF, 20V, DT	04-5592
C8	100µF, 10V, DT	04-5576
C9	100µF, 10V, DT	04-5576

- **TRANSISTOR**

Q36	2N3904	05-5755

- **INTEGRATED CIRCUITS**

U10	ICM7556	06-6244
U11	CD74HCO8	06-6222
U13	CD4054	06-6245
U14	CD4056	06-6095
U15	CD4056	06-6095
U16	CD4056	06-6095

Ref. No.	Description	Part No.
U17	CD4056	06-6095
U18	CD4056	06-6095
U19	CD4056	06-6095
U20	CD74HC573	06-6093
U21	87C257	06-6278
U22	80C51FA	06-6236
U25	RDD104	06-6060
U26	LM358	06-6024
U43	CD74HC238	06-6246
• **DIODE**		
CR45	1N4148	07-6272
• **RESISTORS**		
R27	3.3k	10-7013
R28	220k	10-7066
R29	130k	10-7067
R30	470k	10-7026
R31	220k	10-7066
R32	1.2k	10-7058
R33	5.6k	10-7042
R40	1M TRIMMER	09-6828
R41	1M TRIMMER	09-6828
• **RESISTOR NETWORKS**		
R34-R35	NETWORK-22k SIP 10 PIN	12-7566
• **TRANSFORMER**		
T37	M300-9	4275-074
• **CRYSTAL**		
Y39	6.000 MHZ	01-5209
• **CONNECTOR**		
P3/1-50	RIBBON-1-102159-0	13-7834
• **MISCELLANEOUS**		
*	28P SOCKET	06-6096
7 EA.	SPACER-816-045 16P	18-8990
*	SPACER-470-015	18-8991
2 EA.	RIBBON-102312-2 LATCH	13-7805

Ref. No.	Description	Part No.
Calibration Board, Drawing 261 X 59		
BOARD	Assembled Board	5261-075
• **VOLTAGE REFERENCES**		
U1	LM385Z-1.2	05-5808
U2	LM385Z-1.2	05-5808
U3	LM385Z-1.2	05-5808
• **RESISTORS**		
R4	22k	12-7754
R10	22k	12-7754
R11	100k TRIMMER	09-6813
R12	100k TRIMMER	09-6813
R13	100k TRIMMER	09-6813
R14	100k TRIMMER	09-6813
• **CONNECTOR**		
P6/1-7	640457-7 MTA100	13-8183
LCD Display Board, Drawing 261 X 58		
BOARD	Assembled Board	5261-074
• **INTEGRATED CIRCUIT**		
U7	3918	07-6252
• **RESISTORS**		
R4	22 OHM	10-7072
R14	22 OHM	10-7072
• **CONNECTORS**		
P4	RIBBON-RD67 50BRN EDGE 50P	13-7816
P5	640456-2 MTA100	13-8073
• **MISCELLANEOUS**		
DS10-DS13	BULB-#6833	22-9613

Backplane Board, Drawing 261 X 60

Ref. No.	Description	Part No.
BOARD	Assembled Backplane Board	5261-076
• **DIODE**		
CR6	1N5819	07-6306
• **CONNECTORS**		
J1-J2	EZA22DRSN	13-8181
P7	640456-7 MTA100	13-8115
P8	1-640456-4 MTA100	13-8141
P9	640456-5 MTA100	13-8057
P10	640456-2 MTA100	13-8073
P11	1-640456-4 MTA100	13-8141

Chassis Wiring Diagram, Drawing 261 X 61

Ref. No.	Description	Part No.
• **AUDIO**		
DS1	UNIMORPH 60690	21-9251
• **CONNECTORS**		
J1	CONN-640456-2 MTA100	13-8073
J2	UG706/U SERIES C	13-7751
J5	PHONE JACK TINI #42A	21-9333
J6-J7	(ON CAL HARNESS)	8261-088
J8	(ON MAIN HARNESS)	8261-087
J9	(ON BATTERY HARNESS)	8261-089
J10	NOT USED	
J11	(ON MAIN HARNESS)	8261-087
• **SWITCHES**		
S1-S7	30-1-PB GRAYHILL	08-6517
S8-S12	7101-SYZ-QE TOGGLE	08-6511
SW1	513381	08-6656
SW2	513381	08-6656
SW3	MTA-206PA	08-6657
• **BATTERY**		
B1-B4	1.5 VOLT "D" DURACELL	21-9313
• **RESISTORS**		
R1	10k NON-LOCKING	09-6753
• **MISCELLANEOUS**		
M1	M2221 METER ASSY.	4261-091

DRAWINGS AND DIAGRAMS

Amplifier/Power Supply Board Schematic, Drawing 261 x 56
Amplifier/Power Supply Board Component Layout, Drawing BS261072

Processor Board Schematic, Drawing 261 x 91
Processor Board Component Layout, Drawing 261 x 103

Calibration Board Schematic, Drawing 261 x 59
Calibration Board Component Layout, Drawing BS261075

LED Display Board Schematic, Drawing 261 x 58
LED Display Board Component Layout, Drawing BS261074

Backplane Board Schematic, Drawing 261 x 60
Backplane Board Component Layout, Drawing BS261076

RS-232 Board Schematic, Drawing 261 x 179
RS-232 Board Component Layout, Drawing 261 x 180

Wiring Diagram, Drawing 261 x 61

Model 2221 RS-232 Port Addition (LMI Part Number 4261-148)

The Model 2221 RS-232 port addition allows the M2221 data to be read as output to a computer or serial printer, by dumping either the ratemeter or scaler reading, as desired. The desired reading is selected with a toggle switch located in the digital control section of the front panel, labeled with two positions: "SCALER" and "DIG. RATE." The port addition kit (LMI Part Number 4261-148) includes the internal board, a cable that will connect directly to a 9-pin PC port and software routines to log the readings.

The scaler reading dumps when the scaler has completed a count. The ratemeter is dumped every 2 seconds in one of three formats, depending on the firmware installed. The three available formats are (1) counts per 2 seconds, (2) counts per 60 seconds (cpm), or (3) counts per second (cps). Data output is always in a 6-digit format with a letter prefix, corresponding to the following:

Ratemeter: "R"

Scaler: According to the table below

Letter Prefix	Time of Count (min)	Time of Count (sec)
	Format 1 or 2	Format 3 (cps version)
A	0.1	1
B	0.2	2
C	0.5	5
D	1.0	10
E	2.0	30
F	5.0	60
G	10.0	120

A carriage return and then a linefeed character follow the 6th digit.

The communication protocol is 9600 baud, no parity, 1 stop bit, and 8 data bits. The RS-232 port is an output only with no handshaking available. The M2221 will dump the data, no matter what, even if the attached computer or printer is not ready. The cable provided is a coaxial cable, providing TXD and GND to a 9-pin D-connector, ready to plug into a standard PC serial port.

The Model 2221 Processor Board (Part Number 5261-136) utilizes an 87C257 EPROM with one of the following firmware numbers, depending on the desired rate:

Rate Dump as counts per 2 seconds -- #261-06-N03.
Rate Dump as counts per 60 seconds -- #261-07-N02.
Rate Dump as counts per second with meterface 202-930 -- #261-02-N02

Ref. No.	Description	Part No.
	RS-232 Board, Drawing 261 X 179	
BOARD	Assembled RS-232 Board	5261-179

- **CAPACITORS**

C1	4.7μF, 20V, SMT	04-5653
C2	10μF, 20V, SMT	04-5655
C3	4.7μF, 20V, SMT	04-5653
C4	10μF, 20V, SMT	04-5655
C5-C6	68μF, 10V, SMT	04-5654

- **INTEGRATED CIRCUITS**

U001	IC-MAX220CSE, SMT	06-6329

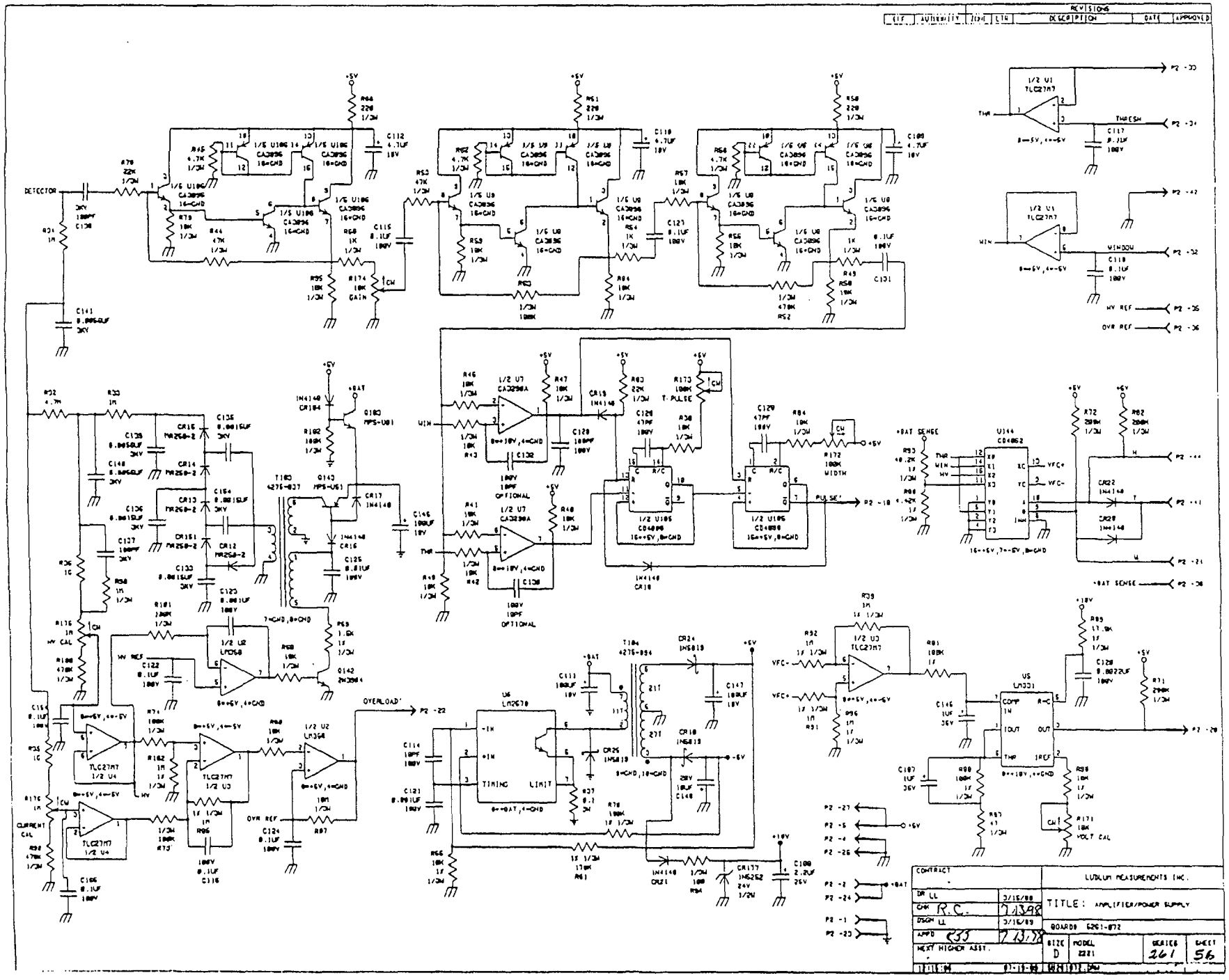
REVISIONS
DETECTOR
GAIN
THRESH
WINDOW
HV REF
OVR REF
T. PULSE
WIDTH
PULSE'
+BAT SENSE
OVERLOAD'
TIMING
LIMIT
CURRENT CAL
HV CAL
VOLT CAL
CONTRACT
LUDLUM MEASUREMENTS INC.
TITLE: AMPLIFIER/POWER SUPPLY
BOARD# 5261-072
SIZE D
MODEL 2221
SERIES 261
SHEET 56

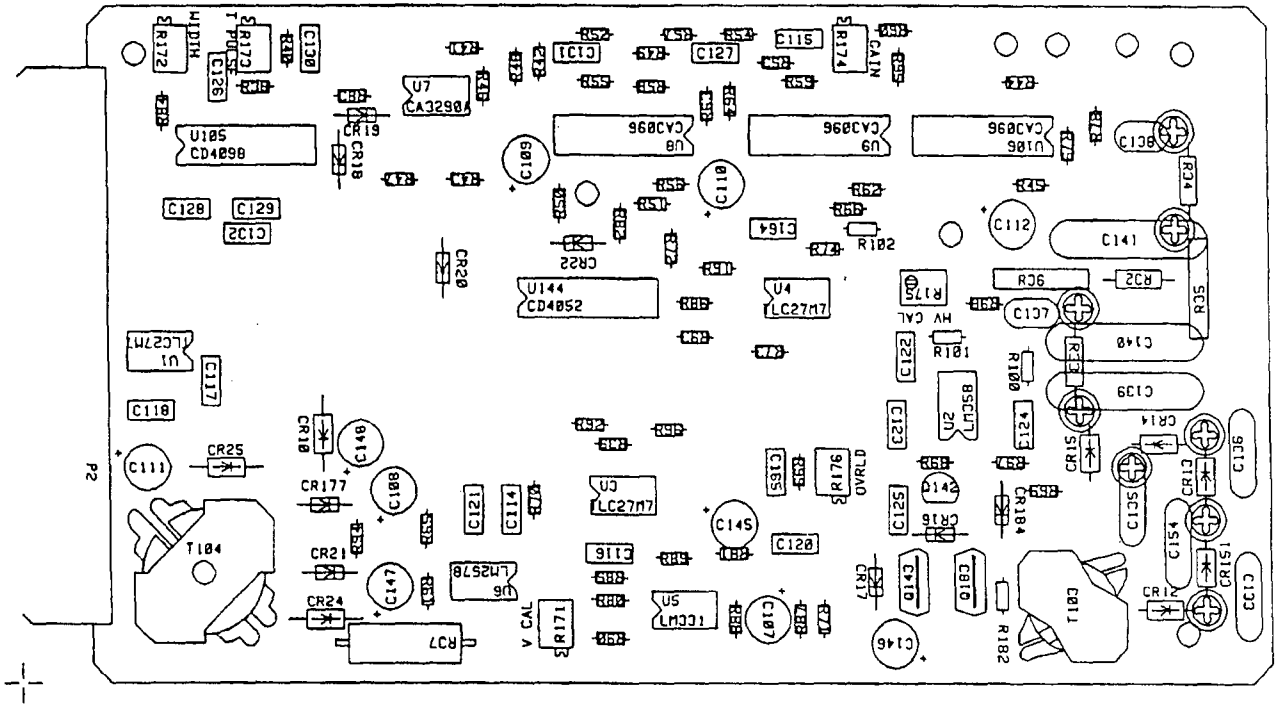

BOARD# 5261-072	
TITLE AMPLIFIER/POWER SUPPLY	
MODEL 2221	
COMPONENT OUTLINES	
DR RDS	4/7/89
CHK R.C.	7/13/98
DSGN LL	3/15/89
APPD BS	7/13/98
B:BS261072.DRW	
07-19-89	15:32:24

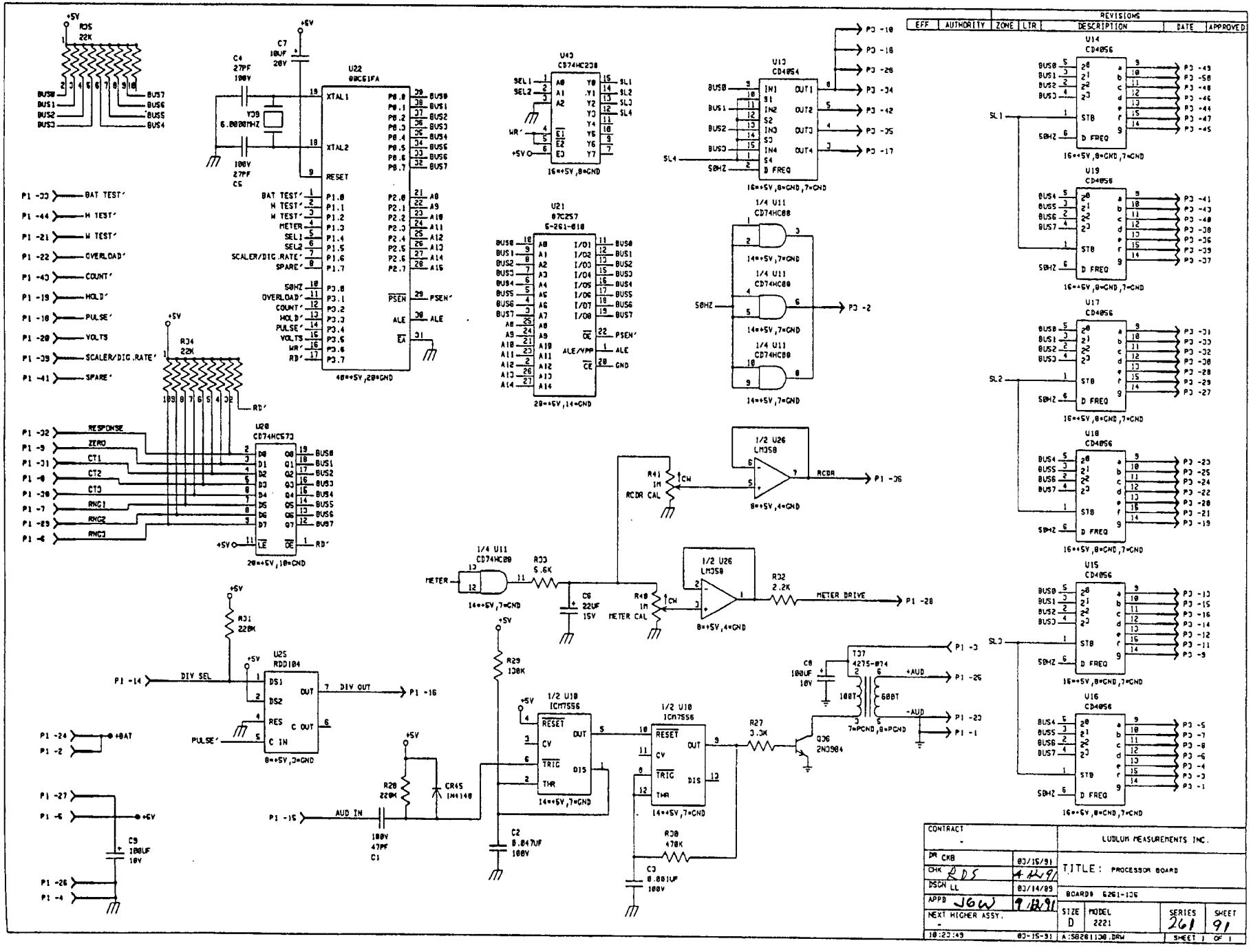
REVISIONS
EFF | AUTHORITY | ZONE | LTR | DESCRIPTION | DATE | APPROVED
U22 80C51FA
U20 CD74HC573
U21 62C1-010
U13 CD4054
U14 CD4056
U15 CD4056
U16 CD4056
U17 CD4056
U18 CD4056
U19 CD4056
U25 RDD104
U26 LM358
U10 ICM7556
Q36 2N3904
T37 4275-074
CONTRACT
LUDLUM MEASUREMENTS INC.
TITLE: PROCESSOR BOARD
BOARD# 62C1-106
SIZE D
MODEL 2221
SERIES 261
SHEET 91
A:5828106B.DRW
SHEET 1 OF 1

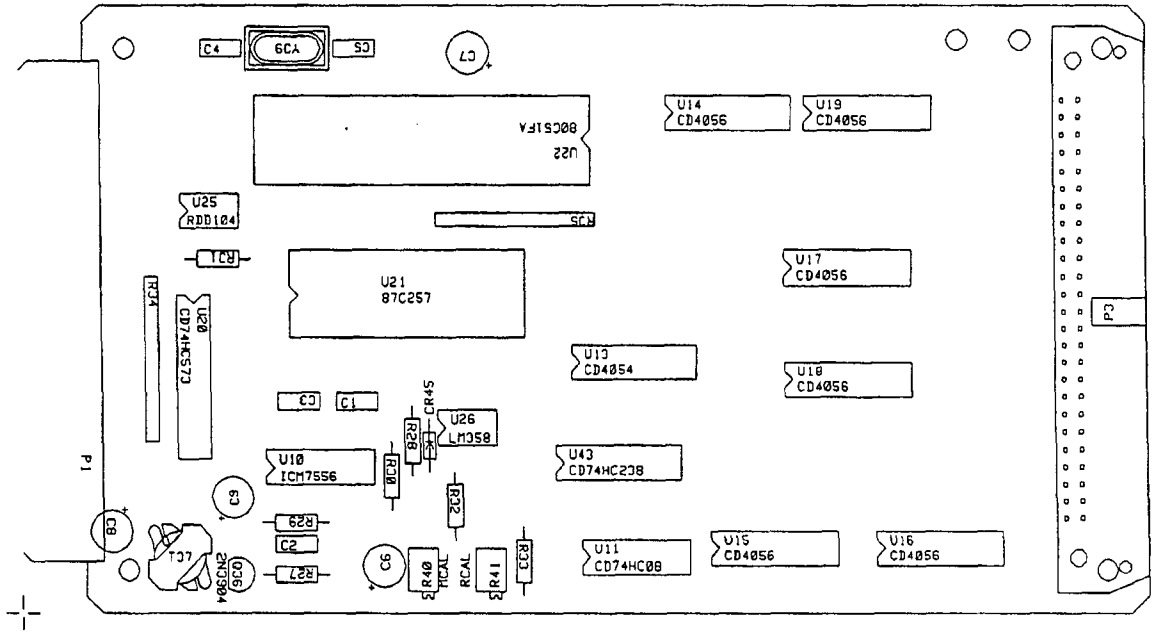

LUDLUM MEASUREMENTS INC. SWEETWATER, TX.					
DR CKB	03/15/91	TITLE: PROCESSOR BOARD			
CHK R.C.	41398	BOARD# 5261-136		BS261136	
DSGN LL	03/14/91	MODEL 2221	SERIES 261	SHEET 100	
APP BJS	7-13-78	COMP ARTWORK ☐		SLDR ARTWORK ☐	
09:19:04 29-Mar-94		COMP OUTLINE ☒		SLDR OUTLINE ☐	
COMP PASTE ☐	COMP MASK ☐	SLDR PASTE ☐		SLDR MASK ☐	

EFF	AUTHORITY	ZONE	LTR	REVISIONS DESCRIPTION	DATE	APPROVED

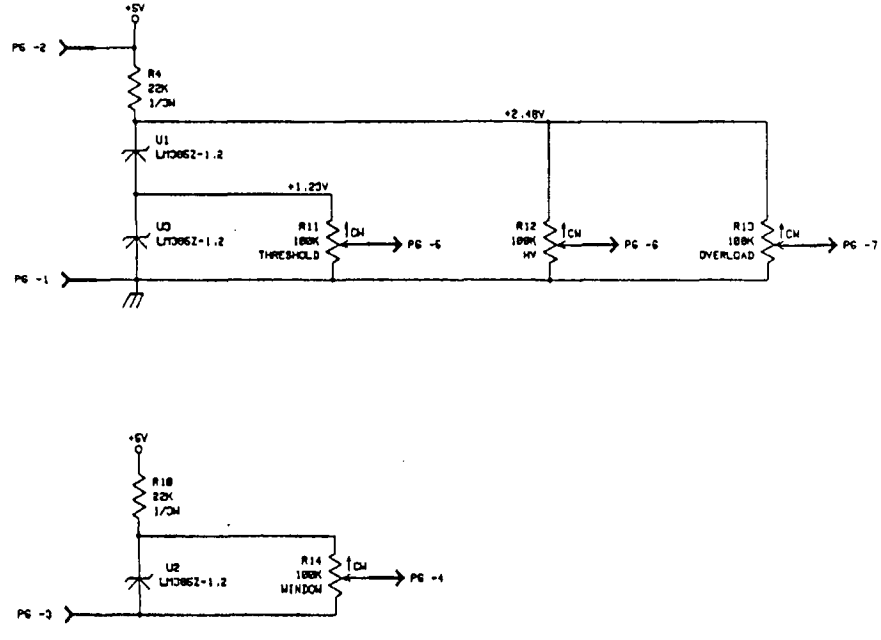

CONTRACT -		LUDLUM MEASUREMENTS INC	
DR LL	3/16/89	TITLE: CALIBRATION BOARD	
CHK R.C.	4/13/98		
DSGN LL	3/16/89	BOARD# 6261-075	
APPD BS	3/16/89	SIZE D / MODEL 2221	SERIES 261 / SHEET 59
NEXT HIGHER ASSY. -			
15:59:36	07-19-89	8:\6261075.DRW	SHEET 1 OF 1

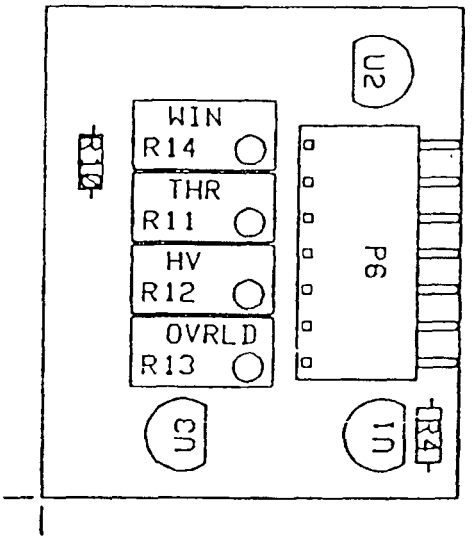

BOARD# 5261-075	
TITLE CAL BOARD	
MODEL 2221	
COMPONENT OUTLINES	
DR RDS	3/28/89
CHK R.C.	7/13/98
DSGN LL	3/16/89
APPD RSS	7/13/98
BS261075.DRW	
05-20-89	07:38:12

REVISIONS						
EFF	AUTHORITY	ZONE	LTR	DESCRIPTION	DATE	APPROVED

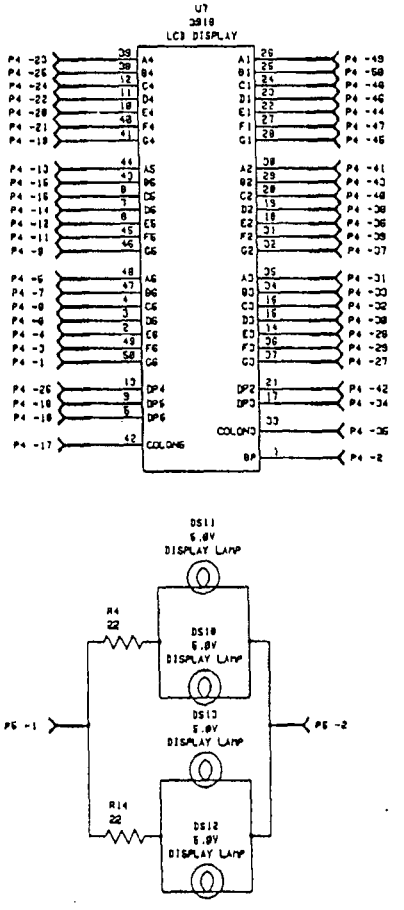

CONTRACT		LUDLUM MEASUREMENTS INC.	
DR LL	3/16/88	TITLE: LCD DISPLAY	
CHK R.C.	7/13/88		
DSGN LL	3/16/88	BOARD# 5281-074	
APPD	7/13/88	SIZE D	MODEL 5281	SERIES 261	SHEET 58
NEXT HIGHER ASSY.					

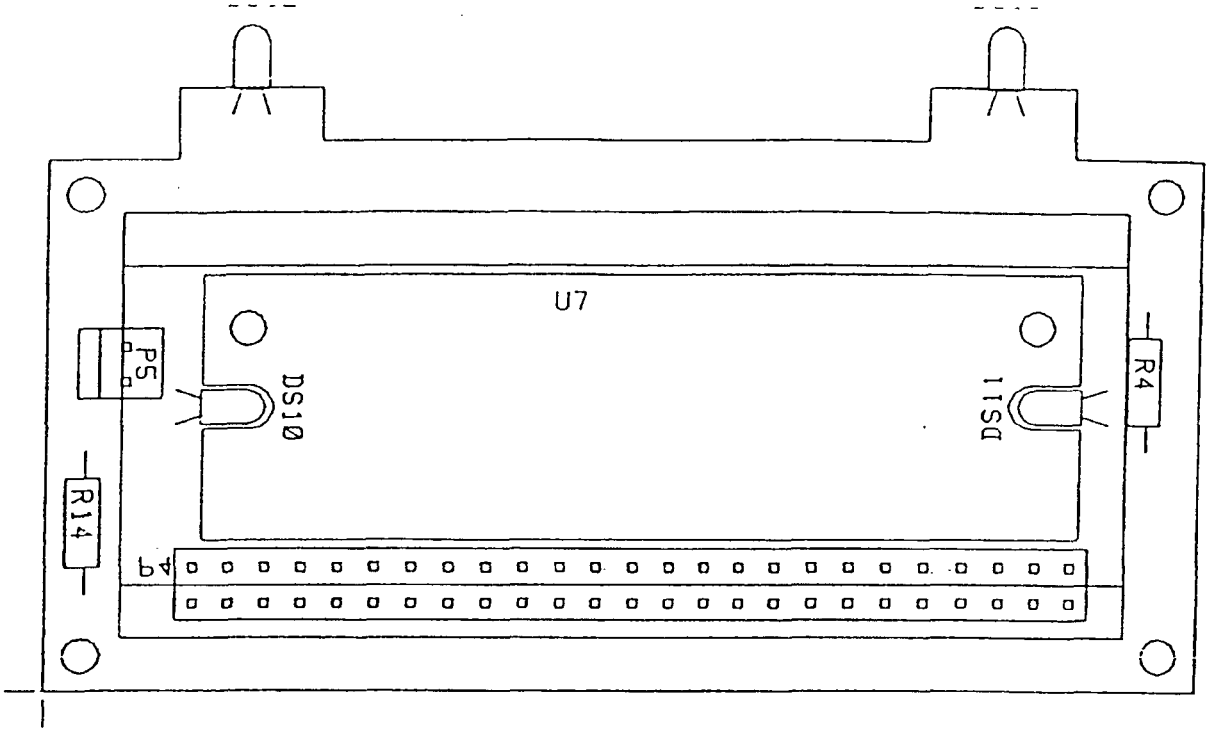

BOARD# 5261-074	
TITLE DISPLAY BOARD	
MODEL 2221	
COMPONENT OUTLINES	
DR -	3/27/89
CHK R.C.	7/13/98
DSGN LL	3/16/89
APP.D RSS	7/13/98
BS261074.DRW	
05-24-89	15:44:20

REVISIONS						
EFF	AUTHORITY	ZONE	LTR	DESCRIPTION	DATE	APPROVED

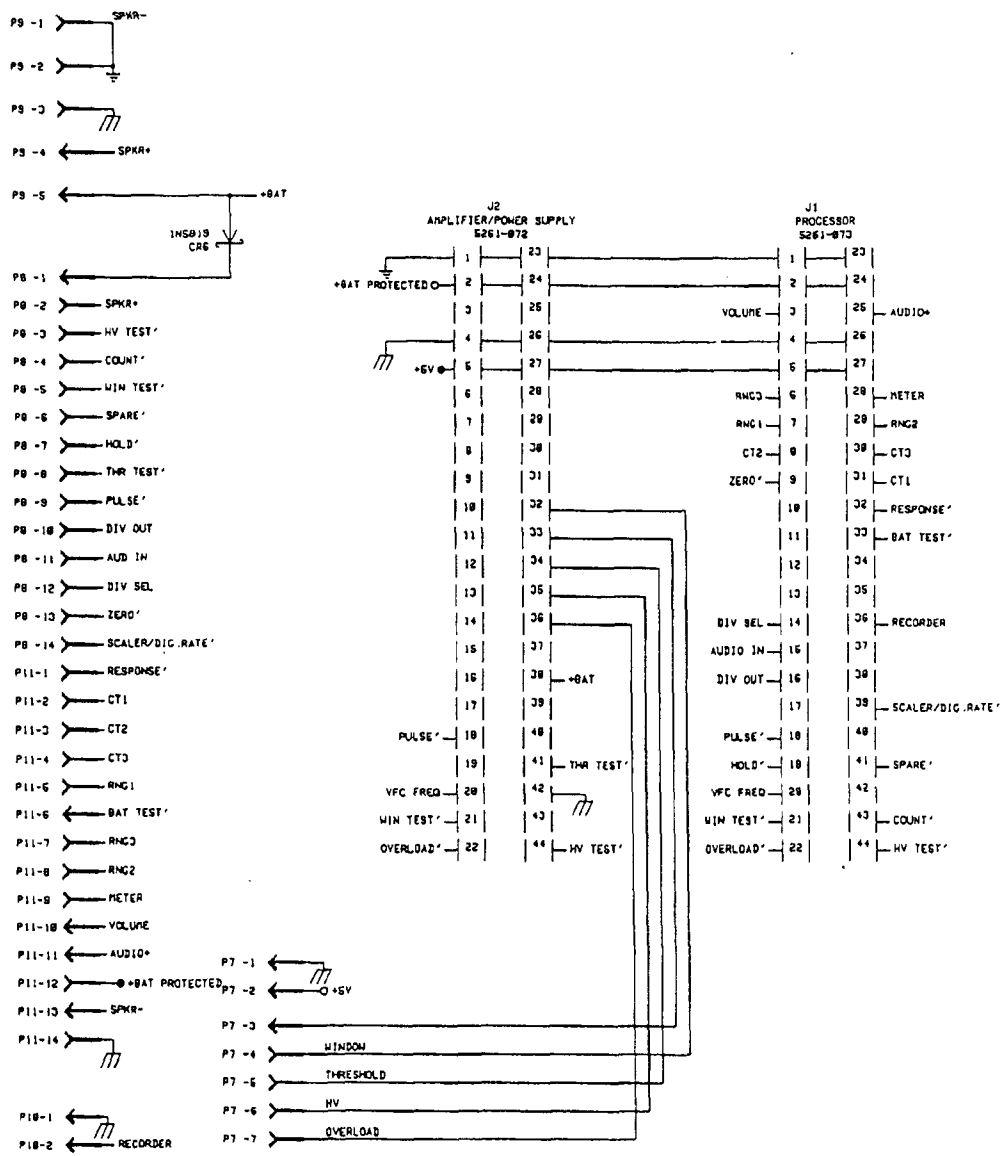

CONTRACT		LUDLUM MEASUREMENTS INC.	
DR LL	3/16/89	TITLE: BACKPLANE	
CHK R.C.	7/13/98		
DSGN LL	3/16/89	BOARD# 5261-076	
APPD BS	7/13/98	SIZE D / MODEL 2221	SERIES 261 / SHEET 60
NEXT HIGHER ASSY. -			
07:46:14	05-24-89	5261076.DRW	SHEET 1

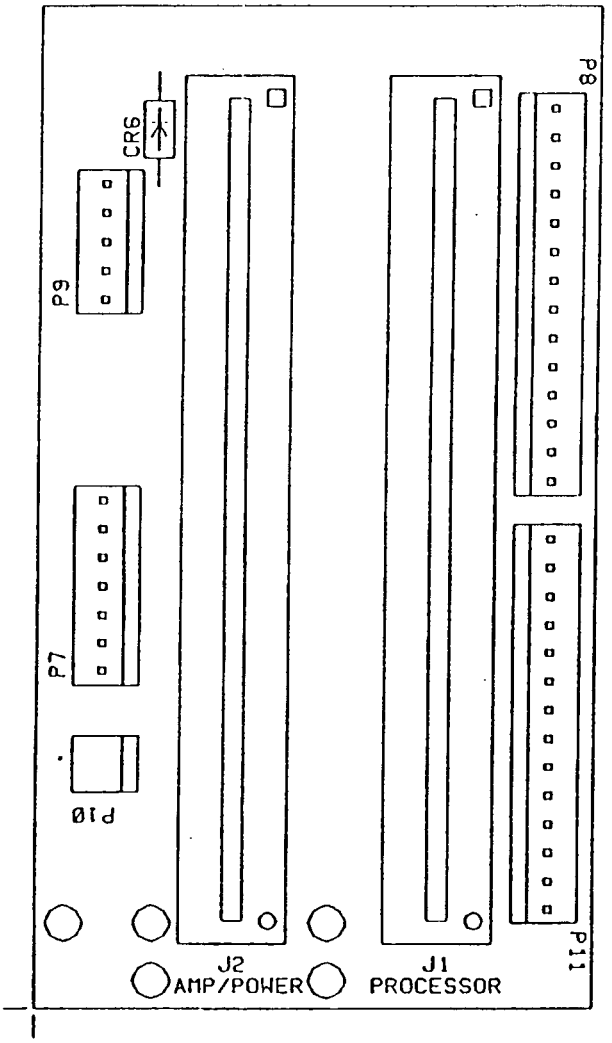

BOARD# 5261-Ø76	
TITLE BACKPLANE	
MODEL 2221	
COMPONENT OUTLINES	
DR RDS	3/28/89
CHK R.C.	7 /13 /98
DSGN LL	3/16/89
APPD RSS	7 /13 / 98
BS261Ø76.DRW	
Ø5-24-89	15:15:37

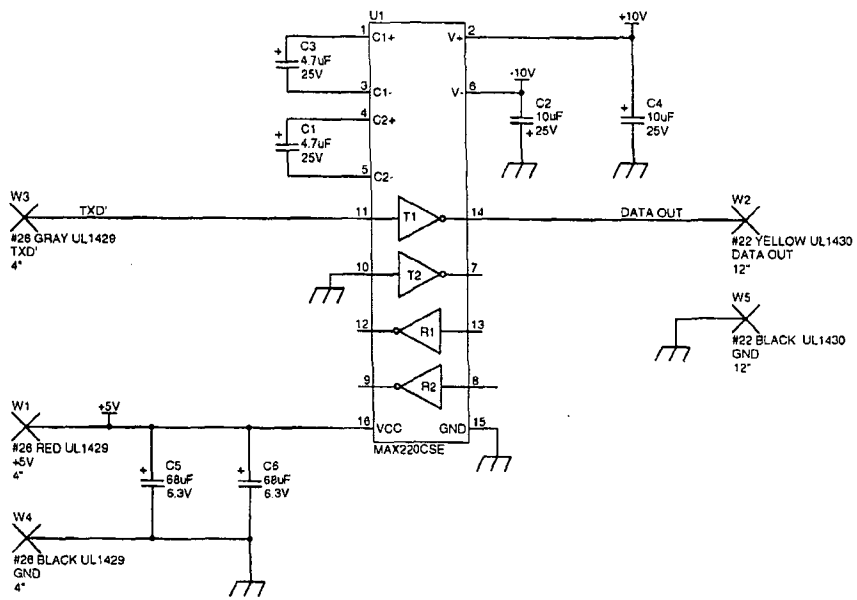

LUDLUM MEASUREMENTS, INC.		PO Box 810 501 Oak Street Sweetwater, Texas 79556 U.S.A. 1-800-622-0828	
Drawn: CKB	21-MAR-01	Title: RS-232 BOARD	
Design: RDS	11-NOV-99	Model: 2221	
Check: RC	Feb 4 02	Board#: 5261-179	
Approve: RDS	4 Feb 02	Sheet: 1 of 1	Series 261 / Sheet 179
14:13:37	4-Feb-2002	Rev: 1.0	
X:\Projects\LMW\2221\M2221 Dcb - Documents\5261-179.rev1 0261-179 Sch			

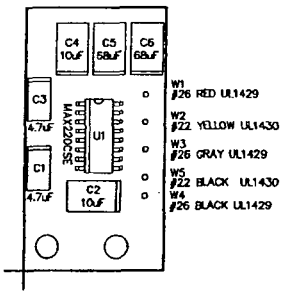

Drawn: CKB	21-MAR-01	Title: RS-232 BOARD			
Design: RDS	11-NOV-99				
Check: R.C.	Feb 4, 2002	Model: 2221			
Approve: RDS	4 Feb 02	Board#: 5261-179			
Layer: Top Overlay		Rev: 1.0	Series	Sheet	
Mech.1 Mech.2 Mech.3 Mech.4	MID:	SCALE: 1.00	261	180	
	14:02:28 4-Feb-2002				

REVISIONS						
EFF	AUTHORITY	ZONE	LTR	DESCRIPTION	DATE	APPROVED

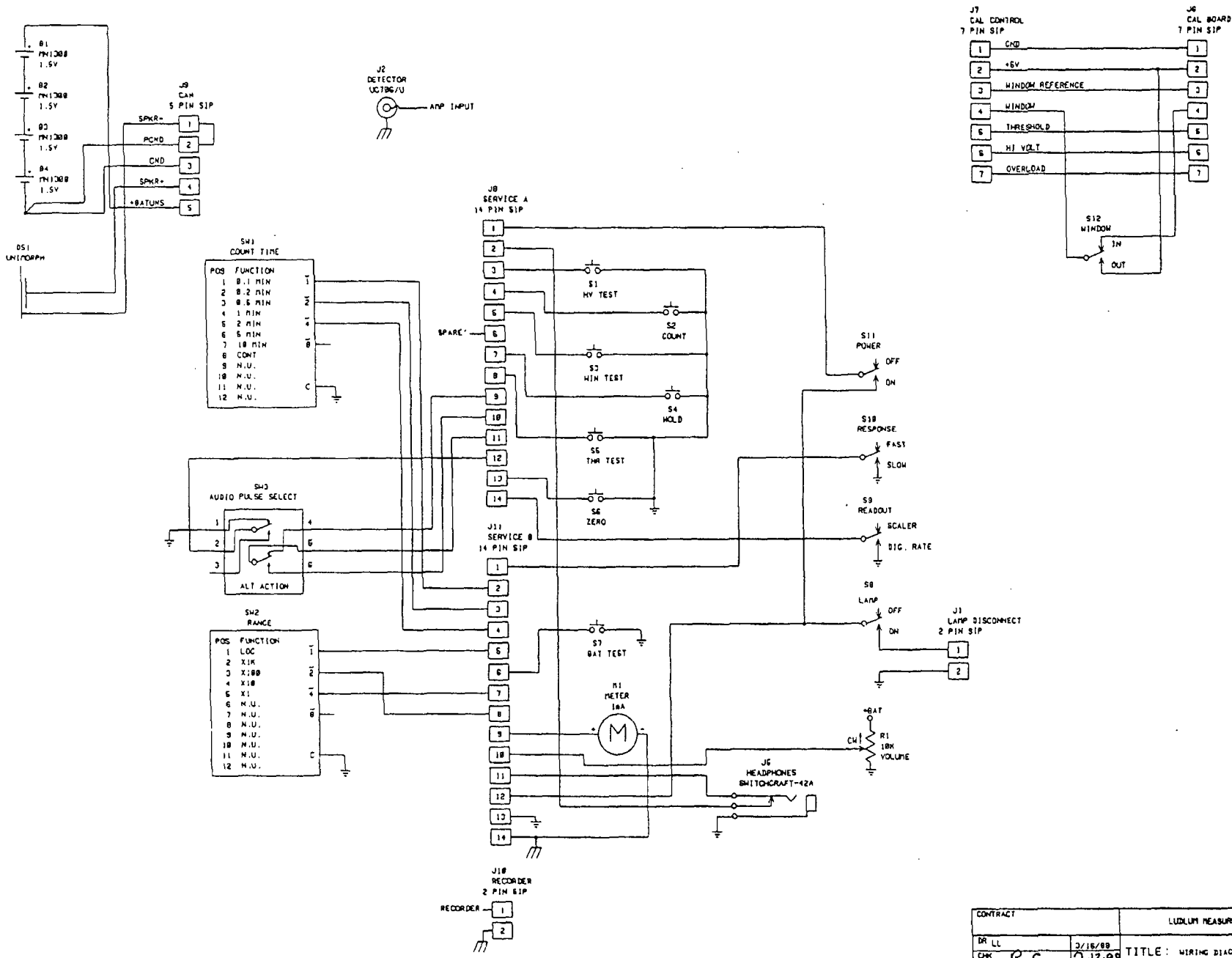

CONTRACT		LUDLUM MEASUREMENTS INC.	
DR LL	3/16/89	TITLE: WIRING DIAGRAM	
CHK R.C.	7/13/98		
DSGN LL	3/16/89	BOARD# 261-077	
APPD	7/13/98	SIZE D / MODEL 2221	SERIES 261 / SHEET 61
NEXT HIGHER ASSY. -			
10:41:05	06-29-89	5926\077.DWG	SHEET 1 OF 1

LUDLUM MODEL 2224

SCALER/RATEMETER

March 2002
Serial No. 183080 and Succeeding
Serial Numbers

Measuring Range: 0-500,000 counts per minute
Power Requirement: two standard "D" cell batteries

LUDLUM MEASUREMENTS, INC.
501 OAK ST., P.O. BOX 810
SWEETWATER, TX 79556
915/235-5494 FAX: 915/235-4672

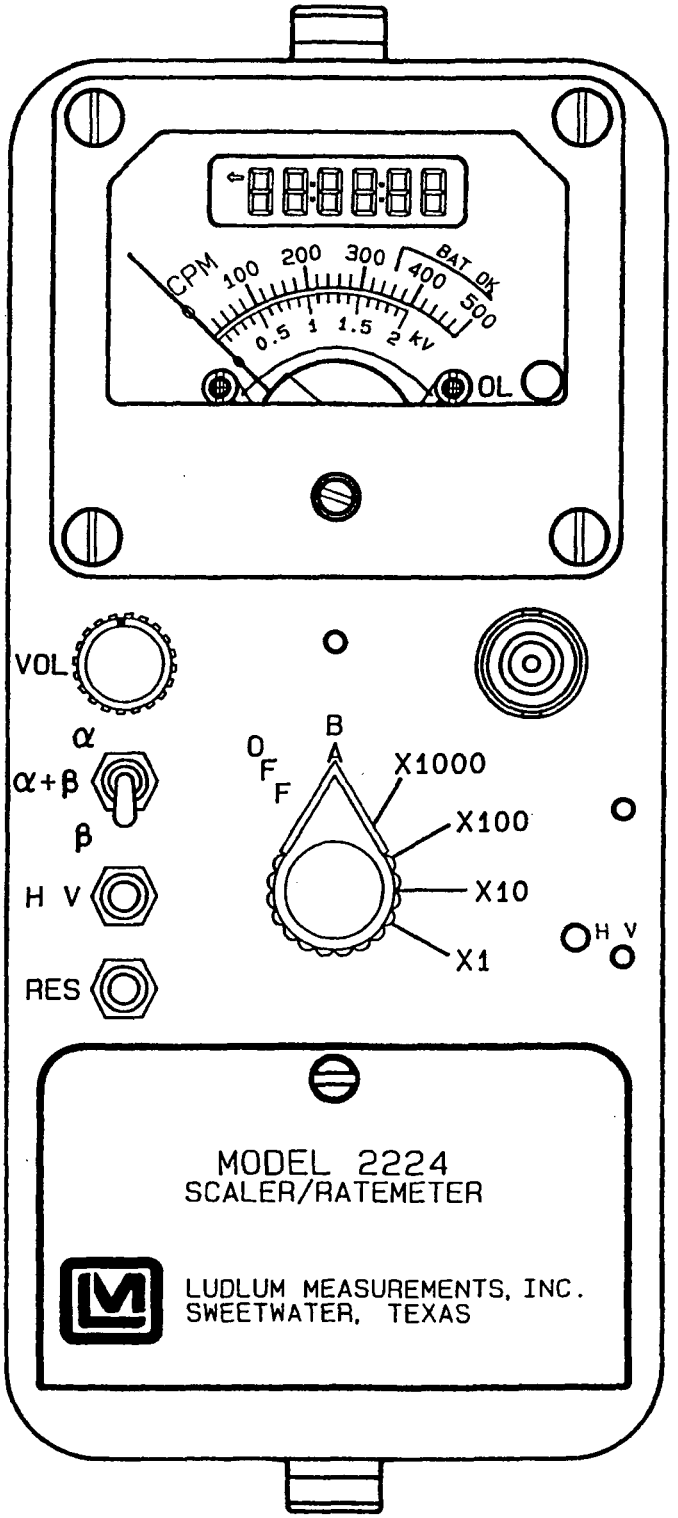

CHG	NO.					DWN	CHK	APP
DWN BG	DATE 9-17-93	CHK	DATE		APP	DATE	
TOL: SHOP STD ☐ OTHER				SCALE: FULL ☐ OTHER			
TITLE MODEL 2224 SCALER/RATEMETER							
LUDLUM MEASUREMENTS, INC. 601 OAK STREET SWEETWATER, TEXAS 79556				SERIES 390		SHEET 85	

M2224 Scaler/Ratemeter
March 2002

TABLE OF CONTENTS

1. GENERAL 1

2. SPECIFICATIONS 1

3. PRINCIPLE OF OPERATION 2

4. PRELIMINARY INSTRUCTIONS 2
   4.1 Unpacking and Repacking 2

5. OPERATING INSTRUCTIONS 2
   5.1 Safety Measures 2
   5.2 Descriptions of Controls and Functions 2
      5.2.1 Operator Controls 2
      5.2.2 Internal Controls 3
   5.3 Operating Procedures 4
   5.4 Calibration 5
      5.4.1 Meter Calibration 5
      5.4.2 Detector Overload Calibration 5

6. THEORY OF OPERATION 6
   6.1 Amplifier/Power Supply board # 5390-066 6
      6.1.1 Detector Input/Amplifier 6
      6.1.2 Alpha/Beta Discriminator 6
      6.1.3 Alpha/Beta Disc. Logic Circuit 6
      6.1.4 Low Voltage Supply 6
      6.1.5 High Voltage Supply 6
      6.1.6 Detector Overload 6
      6.1.7 Meter Drive 6
   6.2 Processor Bd.# 5390-095 7
      6.2.1 Power supply 7
      6.2.2 Microproccessor 7
      6.2.3 LCD Drive 7
      6.2.4 Audio 7

7. MAINTENANCE 8

PARTS LIST 9
   Model 2224 Scaler/Ratemeter 9
      Amp/Power Supply, Drawing 390 X 63 9
      Processor Board, Drawing 390 x 97 10
      Calibration Board, Drawing 390 x 100 10
      Display Board, Drawing 390 x 127 11
      Interconnect Board, Drawing 390 x 124 11
      Chassis Wiring Diagram, Drawing 390 X 103 11

DRAWINGS AND DIAGRAMS 12

1. GENERAL

The Model 2224 is a portable microprocessor based radiation survey instrument used to measure and discriminate low level alpha/beta radiation when used with an alpha/beta scintillation or proportional detector.

The data is displayed by an analog ratemeter and a six-digit liquid crystal display (LCD) counter. The ratemeter dial indicates 0-500 CPM with four linear range multipliers of X1-X1000 producing an overall range of 0-500 k CPM. The LCD is used to display the counts accumulated during the preset count time. There are four count times available via internal switches. These count times are 6 seconds, 30 seconds, 60 seconds, and 120 seconds. The counter is reset and started by pressing the Count button located in the end of the carrying handle.

The ratemeter and LCD can display alpha only, beta only, or alpha and beta by selecting the corresponding toggle switch selection. Audible click per event tones can also be selected to discriminate beta (low pitch tone) from alpha (high pitch tone) via the side mounted speaker. Beta threshold, window, and alpha threshold are adjustable to optimize alpha/beta efficiency and count separation.

A regulated high voltage power supply adjustable from 200 to 2000 volts with detector overload detection is utilized to operate a wide range of scintillation detectors. Other operating features of the instrument include programmable audio divide by (beta channel only), a two-position switch (internal) for selecting the audio discrimination mode, an adjustable volume, pushbutton battery test switch, pushbutton high voltage test switch and meter reset.

The unit body is made of cast aluminum with a drawn aluminum can. The unit is operated with two "D" cell flashlight batteries for operation from -10°C to approximately 50°C. For temperature operation to -10°C, either very fresh alkaline or rechargeable NiCd batteries may be used.

2. SPECIFICATIONS

- **POWER:** two standard "D" size batteries.

- **RANGES:** four linear range multiples of X1, X10, X100, and X1000; used in combination with the 0-500 CPM meter dial, 0-500k CPM is achieved with the range multiplier

- **SENSITIVITY:** beta Threshold (BT) is adjustable from 2 - 15 millivolts (mV), beta Window (BW) is adjustable from the beta Threshold up to the alpha Threshold setting; alpha Threshold (AT) is adjustable from 40 - 700 mV

- **AUDIO:** Dual or single tone click per event through a built-in speaker with an adjustable volume control and internally switchable divide by of 1, 10, 100, and 1000 counts per click (beta only).

- **HIGH VOLTAGE:** externally adjustable from 200 - 2000 volts

- **LINEARITY:** within ± 5% of full scale for the analog ratemeter; ± 2% for the LCD

- **RESPONSE TIME:** X1 range multplier = 10 seconds, X10 = 7 sec., X100 = 2 sec., X1000 = 1.5 sec.; all response times measured from 10-90% of full scale

- **BATTERY DEPENDENCE:** Instrument calibration change less than 3% to battery endpoint

- **METER:** 1 mA, 250 degree, 8.3 cm scale, with pivot-and-jewel suspension

- **LCD:** 6 digit Liquid Crystal Display with 6.4 mm characters and a counter overflow arrow, colons indicate count in process

- **CONNECTOR:** Series "C"

- **SIZE:** 10.67 cm (4.2") H x 8.9 cm (3.5") W x 21.6 cm (8.5") L, exclusive of handle

- **WEIGHT:** 1.36kg (3 lbs.) less detector and batteries

- **FINISH:** drawn-and-cast aluminum, with computer-beige polyurethane enamel and silk-screened nomenclature

- **BATTERY LIFE:** Exceeds 350 hours with a fresh set of alkaline "D" cell batteries

- **TEMPERATURE RANGE:** -10°C to 50°C (-14°F to 122°F)

- **CROSSTALK:** No more than 10% of gross alpha counts in beta channel and no more than 1% of gross beta counts in alpha channel.

3. PRINCIPLE OF OPERATION

The Model 2224 is to be used in combination with alpha/beta scintillation or proportional detectors. The M2224 uses pulse heights discrimination to distinguish between alpha and beta pulses from the radiation detector.

The detected alpha count is displayed by selecting the α position on the three position α, α + β, and β toggle switch. The sum of the alpha and beta counts are displayed in the α + β position and beta counts are displayed in the β position. Multiply the cpm reading on the analog ratemeter by the range multiplier position. When using the LCD and preset count time interval, the counts are accumulated in each of the three channels during the count cycle. The alpha, alpha + beta, and beta counts can be displayed by selecting the appropriate α, α + β, β channel. The count cycle is started by depressing the pushbutton switch located in the end of the carrying handle.

The RESET pushbutton switch resets the meter pointer to zero. The detector operating voltage is displayed on the meter dial, 0-2 kV (kilovolts), by depressing the HV switch. The OL (overload) lamp, located it the lower right-hand corner of the meter dial, is to indicate that the detector is saturated either by a puncture in the detector face on a scintillation detector or an exposure to a radiation field above the counting capability of the M2224. The analog meter will deflect full scale when the OL lamp is illuminated.

4. PRELIMINARY INSTRUCTIONS

4.1 Unpacking and Repacking

- Remove calibration certificate and place in secure location. Remove instrument and accessories (batteries, cable, etc.) and ensure that all of the items listed on the packing list are in the carton. If more than one instrument (M2224 and detector) is in carton refer to the calibration certificate for serial number match.

- To return instrument for repair or calibration provide sufficient packing material to prevent damage during shipment. Provide appropriate warning labels to ensure careful handling. Include detector(s) and related cable(s) for calibration. Include brief information as to the reason for return and return shipping instructions (address, P.O.#, etc.).

5. OPERATING INSTRUCTIONS

5.1 Safety Measures

CAUTION

The high voltage (HV) constant current output is limited by the internal circuitry to approximately. 50 microamps, but a mild electric shock may occur if you make contact with the input connector. Switch the M2224 to the OFF position before connecting or disconnecting the cable or detector.

5.2 Descriptions of Controls and Functions

5.2.1 Operator Controls

- **OFF/BAT/X1000/X100/X10/X1 Switch:** A six position rotary switch to select the analog meter range multipliers and check the battery status. When switched to the BAT position the meter pointer should deflect above the left vertical mark on the BAT OK line. Moving the range selector switch to one of the range multiplier positions (X1, X10, X100, X1000) provides the operator with and overall range of 0-500 k cpm. Multiply the scale reading by the multplier for determining the actual reading.

During the initial turn ON, the meter will be driven full scale for about 2 seconds and then return to zero. The LCD will show "888888", display the processor program version, and then 0.

- **Liquid Crystal Display (LCD)**: 6 digit display that displays the scaler count for the selected channel. The display also indicates when a count is in progress by turning on two colons. The colons are turned off when the count is completed. If the counter exceeds 999999, an arrow in the upper left corner of the display turns on to indicate the overflow and the counter rolls over to zero and continues counting.

- **VOL**: The volume control for the speaker. Turning this control clockwise will increase the speaker volume and counterclockwise will decrease the volume.

✓NOTE: The volume should be turned down when not required to reduce battery drain.

- **α/α+β/β Switch**: A three-position toggle switch used to select the sum of both alpha and beta count channels (α+β), alpha count only (α), or beta count only (β), for display. This switch affects both the ratemeter and the counter. The separate ratemeter and counter channels are active regardless of the switch position and will continue to function when the channel is not selected for display. This allows the operator to view each channel separately or together by simply selecting the appropriate switch position.

- **HV**: When depressed, provides a readout of the detector high voltage on the meter. Use the 0-2 kV meter scale.

- **RESET:** When depressed, provides a rapid means to drive the analog ratemeter to zero.

- **Count Pusthbutton Switch (located in carrying handle):** When depressed, resets the counter to zero and starts the timer. The colons on the display will turn on and stay on until the count time has expired.

■ Remove the CAL cover to access the following control.

- **HV Adjustment**: Provides a means to vary the high voltage from 200 to 2000 volts.

5.2.2 Internal Controls

■ Remove the instrument cover (can) to access the following controls.

- **AUDIO Divide Select Switch:** A two-pole DIP switch (1 & 2) used to select the audio divide ratios of 1, 10, 100, 1000.

✓ NOTE: The AUDIO divide function only effects the lower frequency beta tones. The higher frequency alpha clicks per events will be unaffected by the divide by selection.

The ratio is selected from the following table. O is open and C is closed.

SWITCH 1	SWITCH 2	DIVIDE BY RATIO
C	C	1
O	C	10
C	O	100
O	O	1000

- **COUNT TIME Select Switch:** A two-pole DIP switch (3 & 4) used to select the count times of 6, 30, 60, and 120 seconds.

The count time is selected from the following table. O is open and C is closed.

SWITCH 3	SWITCH 4	COUNT TIME
C	C	6 seconds
O	C	30 seconds
C	O	60 seconds
O	O	120 seconds

- **TONE**: A one-pole DIP switch (5) used to select tone discrimination between alpha and beta count channels. When in the DUAL mode, alpha and beta pulse tones will be audible in all selector switch positions (i.e. if in the α only position and β is detected, the β tones will be heard in addition to the α tones and visa versa).

When the SNGL tone position is selected, both alpha and beta pulse tones can be heard in the α+β selection, but alpha pulses cannot be heard in the beta only channel selection and beta pulse tones will not be heard in the alpha only channel selection.

SWITCH 5	TONE MODE
C	DUAL
O	SINGLE

✓ NOTE: The following controls are utilized during calibration only and should only be performed by a qualified calibrator.

- **MTR**: A multi-turn potentiometer used to calibrate the meter to the cpm reading.

- **AT**: A multi-turn potentiometer used to vary the alpha pulse threshold from ≈ 40 to 700 mV.

- **BW**: A multi-turn potentiometer used to vary the beta pulse upper window limit from the beta threshold to the alpha threshold setting and anywhere in between those two paramenters. The beta window can be disabled by adjusting the BW control to the maximum clockwise position allowing the upper beta threshold limit to equal the alpha threshold.

- **BT**: A multi-turn potentiometer used to vary the beta pulse threshold from ≈ 2 to 15 millivolts.

- **OL**: A multi-turn potentiometer which provides a means to vary the detector current overload set point.

- **LIM**: A multi-turn potentiometer used to set the maximum HV limit to 2000 VDC.

- **HV**: A multi-turn potentiometer used to adjust the high voltage test reading to correspond with the actual high voltage output. The HV switch must be depressed during adjustment.

- **LB**: A multi-turn potentiometer used to adjust the minimum battery voltage level corresponding to the low battery indication on the meter dial. The BAT switch must be depressed during adjustment.

5.3 Operating Procedures

o Release the can latches and remove the can from the 2224 taking care not to damage the speaker wires. Using a ball point pen, set the switches for the AUDIO divide by, TONE, and COUNT TIME to the desired selection. Then replace the can and fasten the latches.

✓ NOTE: To open the Battery Lid, twist the lid button counterclockwise 1/4 turn. To close, twist clockwise 1/4 turn.

o Open the Battery Lid and install two "D" size batteries. Note (+) (-) marks on the inside of the lid. Match the battery polarity to these marks.

✓ NOTE: Center post of flashlight battery is positive. Close the battery box lid.

o Connect a detector to the M2224.

o Switch the OFF/BAT/X1000-X1 switch to the BAT position. The meter pointer should deflect above the left vertical mark on the BAT OK line. If the meter does not respond correctly, recheck that the batteries have proper polarity and are good. The LCD should show all eights, display the program version number, and then display 0.

- The detector operating parameters are established by adjusting the detector operating voltage (HV), alpha threshold, and beta window to find an optimum efficiency for the alpha/beta scintillator or proportional detector.

The threshold and window parameters can be adjusted to optimize alpha/beta count discrimination, count efficiency, and minimize "cross talk" between channels. Refer to the specific detector Operation Manual or calibration certificate for the suggested threshold and window settings. Once the thresholds and window settings are established, an operating voltage versus count rate plot should be performed for both alpha and beta count channels with alpha and beta particle emission sources.

The following procedure is example of determining the operating voltage for an alpha/beta scintillation or proportional detector:

o Connect a Ludlum Model 500 Pulser or equivalent to the Model 2224.

o Switch the 2224 to the β position. Adjust the beta threshold (BT) for 3.5 mV and the window (BW) for 30 mV. The pulser counts should be detected on the 2224 ratemeter above 3.5 ±1 mV and should shut off above 30mV.

o Switch the channel selector switch to the α position. Adjust the pulser for a 120mV pulse output and vary the AT control until counts are detected on the ratemeter.

o Depress the HV switch and adjust the HV potentiometer for 0.4 to 0.5 kV on the 0-2.0 kV scale. Connect the scintillator and switch to the β only position. Place an alpha source on the detector face.

o Slowly increase the HV potentiometer to observe an increase, then decrease, and increase again in count as the HV is increased. Decrease the HV until the ratemeter is in the "dip" of the observed count rate versus HV plot just performed. Depress the HV switch and note the HV setting.

o Plot a HV versus count rate plateau in 25 volt increments, 50 volts each side of the HV reading found in the above step (ie, HV setting for count "dip" in the above step = 675 volts, start the plot at 625 volts and increase in 25 volts steps until 725 volts is reached). Plot alpha source, beta source, and background counts for both the α and β channel positions.

o Find the optimum operating voltage from the plot which gives the greatest alpha and beta source efficiency while maintaining no greater than the maximum acceptable level of "cross talk" between channels.

o Select the desired count channel display, and proceed to use instrument.

5.4 Calibration

5.4.1 Meter Calibration

• A Ludlum Model 500 Pulser or equivalent is required. If the Pulser does not have a high voltage readout, use a high impedance voltmeter with at least 1000 Megohm input resistance to measure the detector voltage.

o Ensure that the meter movement has proper mechanical zero. The adjustment is on the front of the meter bezel. It must be adjusted to "zero" with the ON/OFF selector switch in the OFF position.

o Connect the Model 500 Pulser to the Model 2224 with the appropriate cable. Rotate the M2224 range multplier switch to the X100 position. Select the $\alpha+\beta$ channel position.

o Adjust the Pulser for 40,000 cpm and adjust the pulse amplitude to twice the beta threshold level (ie; beta threshold = 3.5mV, adjust pulser to 7-10mV).

o Remove the instrument cover and adjust the MTR potentiometer until the meter reads 400 cpm. Adjust the Pulser to 10,000 cpm and ensure ratemeter reads 100 ± 10%. Decade the Pulser and M2224 range multiplier switch to check meter linearity on the X1000, X10, X1 positions. Linearity should be within ± 10% of each reading.

o Set the LCD count time for 60 seconds. Adjust Pulser count rate to 40k cpm. Depress the count button and when count cycle is complete confirm that LCD reads within ± 2% of the incoming count rate.

o Adjust the BT, BW, and AT controls for the appropriate set points as described in section 5.3.

o Connect high impedance high voltage meter (may use the Model 500 Pulser if equipped with a HV meter) and adjust the HV control for a reading of 1000 VDC on the voltmeter.

o Depress the HV pushbutton switch and adjust the HV potentiometer located on the circuit board for a reading of 1.0 kV on the meter dial. Adjust the HV output from 500 to 1500 Vdc and confirm that the 2224 HV meter corresponds to the external voltmeter within ±10% of each reading.

o Remove batteries from the battery compartment and connect a DC power supply to the two screw terminals located at the rear of the battery compartment. The positive power supply lead should connect to the terminal with the red wire and the negative lead to the terminal with the black wire.

o Adjust the power supply for 2.2 Vdc and switch the M2224 to the $\alpha+\beta$ position. Depress the BAT pushbutton switch and adjust the LB potentiometer to align the meter needle with the low battery mark on the meter dial (vertical line to the left of BAT OK).

o Replace M2224 cover and proceed with use.

5.4.2 Detector Overload Calibration

✓ NOTE: The detector operating voltage (HV) must be determined and set before the OL (overload) adjustment is performed. If the detector operating voltage is re-adjusted, the overload adjustment must be re-adjusted.

o Adjust the OL control to the maximum counterclockwise position.

✓ NOTE: Detector saturation is when the meter response no longer increases with increasing radiation field intensity.

o For alpha/beta scintillators, expose the detector photomultiplier tube (PMT) to a small light leak by loosening the detector window. Some scintillation detectors incorporate a screw in the detector body which when removed will simulate a detector face puncture or light leak. The meter should start to decrease toward zero as light saturates the scintillation material.

o Expose just enough light to where the meter starts to decrease. Adjust the OL control until the overload LED just begins to flicker on the meter dial. The ratemeter should deflect above full meter scale at this point.

o Re-seal the detector window and expose the detector to a radiation source that will drive the meter near full scale. Confirm that the LED does not turn on and the meter remains on scale.

6. THEORY OF OPERATION

6.1 Amplifier/Power Supply board # 5390-066

Refer to schematic 390 x 63 for the following:

6.1.1 Detector Input/Amplifier

Negative going detector pulses are coupled from the detector through C021 to Amplifier U021. R023 and CR021 protects the input of U021 from inadvertent shorts. Self-biased amplifier U021 provides gain in proportion to R021 divided by R022. Transistor pins 4, 5, and 6 of U021, provides amplification. Pins 12 and 15 of U021 are coupled as a constant current source to pin 6 of U021. The output self-bias to 2V be (approximately 1.4 volts) at pin 7 of U021. This provides just enough bias current through pin 6 of U021 to conduct all of the current for the constant current source. Positive pulses from pin 7 of U021 are coupled to the discriminators through R011 and C011.

6.1.2 Alpha/Beta Discriminator

Positive pulses from amplifier U021 are coupled to comparator U012, pin 6, for alpha discrimination and pins 6 and 2 of U011 for beta discrimination. R103, Alpha Threshold, provides the reference voltage for alpha comparator U012. R106, Beta Threshold (defined as the lower threshold limit of the beta counting window) provides the reference voltage for beta threshold comparator pins 1, 2, and 3 of U011. R102, Beta Window (defined as the upper threshold limit of the beta counting window) provides the reference voltage for the beta window comparator pins 5, 6, and 7 of U011.

6.1.3 Alpha/Beta Disc. Logic Circuit

Alpha pulses from U012 are coupled to univibrator U111. Pulses at pin 6 of U111 are inverted by Q111 for connection to reset (R) pins 3 and 13 of U101. Pin 9 of U111 provides the pulses to be counted the microprocessor (μP). Pulses from pin 9 of U111 are connected to pin 3 of Ulll to provide a time delay for the μP clock cycle to complete before the next alpha pulse can be recognized by the μP.

Beta pulses from pin 1 of U011 are coupled to univibrator U101. Pulses are coupled to the μP from pin 7 of U101 as long as pins 3 and 13 of U011 remain high (+5V). When an alpha and/or a beta window pulse is present, the reset (pins 3 and 13 of U101) function is enabled and 7 of U101 remains high. Pin 7 of Up is connected to pin 13 of U101 to provide a time delay for the μP clock cycle to complete before the next beta pulse can be recognized by the μP.

6.1.4 Low Voltage Supply

Battery Voltage is coupled to switching regulator U201 and associated components to provide +5V to power op-amps and logic circuitry. The charge pump (cp) output, C202, CR211, CR212, and C201 form a voltage doubler circuit to provide +9V for U201 amplifier supply. U001 and related components provide +2.5V reference HV SET and Alpha/Beta discriminator controls. R201, LO BAT, is adjusted so that the meter pointer is aligned with the left vertical mark on the BAT OK line with 2.2 volt battery input.

6.1.5 High Voltage Supply

High Voltage is developed blocking oscillator Q421, T321, C412, and rectified by voltage multiplier CR221-CR224, C221-C223, C211, and C114. High voltage increases as current through Q421 increases, with maximum output voltage with Q421 saturated.

High voltage is coupled back through R123 to op-amp pin 2 of U311. Resistor network R211-214 completes the HV division circuit to ground. R214 provides HV limit at 2.0 kV when the HV SET control on the calibration board is at maximum. The regulated HV output is controlled by HV potentiometer located under the CAL cover on the front panel. This control provides the reference for comparator pin 3, U311. During stable operation, the voltage at pin 2 of U311 will equal the voltage at pin 3 of U311. Pin 1 of U311 will cause conduction of Q312 to increase or decrease until the HV finds a level of stability. R115, HV TEST, calibrates the analog meter to the HV output when the HV test pushbutton switch is depressed.

6.1.6 Detector Overload

A voltage drop is developed across R121 and sensed by comparator U012 as detector current increases. When the voltage at pin 3 of U012 goes below pin 2, pin 1 goes low illuminating the OL LED and driving the meter to full scale. R211, Overload, provides adjustment for the overload set point.

6.1.7 Meter Drive

Pulses are coupled from the μP board (refer to μP theory of operation) to the gate of Q302. Q302 inverts the pulses, R403 and C401 provides inergration. Integrated meter drive voltage is coupled from P1-13 via

the battery (BAT) and HV test switch to pin 5 of U311. The meter is driven by the emitter of Q111, coupled as a voltage follower in conjunction with pin 6 and 7 of U311. R104, Meter Cal, is adjusted to calibrate the ratemeter reading corresponding to the incoming count rate. R405 and R406 provide temperature compensation for changes in the meter resistance due to temperature variations.

6.2 Processor Bd.# 5390-095

Refer to schematic 390 x 97 for the following:

6.2.1 Power supply

Battery voltage is coupled to switching regulator U201 and associated components to provide +5V to power the µP and display drivers U211, 212. R101, C101, Q101, and Q201 form a delay switch which allow the U321 to stabilize before the load current is connected to the +5V supply.

6.2.2 Microproccessor (µP)

U311, Intel N87C51FA, controls all of the data, control inputs, and display information. The clock frequency is crystal controlled by Y211 and related components at 6.144 MHz. The µP incorporates internal memory (ROM) storing the program information. C311 resets the µP at power-up to initiate the start of the program routine. During the program loop the µP looks at all of the input switches for initiation or status changes and responds accordingly.

The µP uses Pulse-width Modulation to control the analog ratemeter. The analog output, RATE (P3-4), is divided into 255 increments in a 166 µs period. At full meter deflection the low pulse period, leading edge to leading edge, will be 166 µs, 500 cpm = 130 µs, 400 cpm = 104 µs, 200 cpm = 52 µs, 100 cpm = 26 µs, and 0 = no pulse or +5V. The pulses are inverted by Q302 on the Amplifier/Power Supply board and then integrated by R403, C401.

6.2.3 LCD Drive

U211 and U212 make up the liquid crystal display drive circuitry. The display information is sent from the µP to U211 and 212 via BUS0-3 and ADD0-1 data lines. When the SELECT' line is brought low by the µP, the data is transferred and latched into the drivers until the SELECT' line is brought low again. The corresponding digits and segments are illuminated corresponding to the stored count information from the µP.

6.2.4 Audio

Alpha and/or beta audio pulse frequency is generated by the µP and coupled to Q204. Q204 then inverts the pulses and drives the negative side of the speaker. Bias voltage is provided by the volume control via Q202 and 203 and related circuitry.

7. MAINTENANCE

Instrument maintenance consists of keeping the instrument clean and periodically checking the batteries and the calibration.

An instrument operational check should be performed prior to each use by exposing the detector to a known source and confirming the proper reading on each scale.

Re-calibration should be accomplished after any maintenance or adjustment of any kind has been performed on the instrument. Battery replacements are not considered to be maintenance and do not normally require the instrument to be recalibrated.

Ludlum Measurements recommends recalibration at intervals no greater than one year. Check the appropriate regulatory agencies regulations to determine required recalibration intervals.

The batteries should be removed and the battery contacts cleaned of any corrosion at least every three months. If the instrument has been exposed to a very dusty or corrosive atmosphere, more frequent battery servicing should be used.

Use a spanner wrench to unscrew the battery contact insulators, exposing the internal contacts and battery springs. Removing the handle will facilitate access to these contacts.

NOTE

NEVER STORE THE INSTRUMENT OVER 30 DAYS WITHOUT REMOVING BATTERIES. ALTHOUGH THIS INSTRUMENT WILL OPERATE AT VERY HIGH AMBIENT TEMPERATURES, BATTERY SEAL FAILURE CAN OCCUR AT TEMPERATURES AS LOW AS 100° FAHRENHEIT.

PARTS LIST

Ref. No.	Description	Part No.
Model 2224 Scaler/Ratemeter		
UNIT	Completely Assembled Model 2224 Scaler/Ratemeter	48-2494
Amp/Power Supply, Drawing 390 X 63		
BOARD	Completely Assembled Amp/PS Board	5390-066
• **CAPACITORS**		
C001	100pF, 100V	04-5661
C002	47pF, 100V	04-5560
C011	0.1µF, 50V	04-5663
C012-C014	0.001µF, 100V	04-5659
C015	0.1µF, 50V	04-5663
C016	0.01µF, 50V	04-5664
C017	10µF, 20V	04-5655
C021	100pF, 3Kv	04-5532
C022	10pF, 100V	04-5673
C101-C102	47pF, 100V	04-5560
C111-C113	47pF, 100V	04-5560
C114	0.0047µF, 3kV	04-5547
C121-C122	0.0047µF, 3kV	04-5547
C201-C202	10µF, 20V	04-5655
C203	330pF, 100V	04-5657
C211	0.0047µF, 3kV	04-5547
C212	68µF, 6.3V	04-5654
C213	1µF, 35V	04-5656
C214	0.01µF, 50V	04-5664
C221-C223	0.0047µF, 3kV	04-5547
C301	68µF, 6.3V	04-5654
C311	0.1µF, 50V	04-5664
C401	0.1µF, 50V	04-5663
C411	0.1µF, 50V	04-5663
C412	1µF, 35V	04-5656
C421	68µF, 6.3V	04-5654
• **TRANSISTORS**		
Q111	2N7002L	05-5840
Q301	MMBT4403LT	05-5842
Q302	2N7002L	05-5840
Q311-C312	MMBT3904T	05-5841
Q421	MJD210	05-5843
• **INTEGRATED CIRCUITS**		
U001	LM285M-2.5	06-6291
U011-U012	TLC372ID	06-6290
U021	CA3096M	06-6288
U101	CD74HC4538M	06-6297
U111	CD74HC4538M	06-6297
U201	MAX631AESA	06-6285
U311	TLC27M7ID	06-6292
• **DIODES**		
CR021	MMBD7000LT1	07-6355
CR111-112	MMBD914L	07-6353
CR211-CR212	BAT54	07-6354
CR221-CR225	GI250-2	07-6266
CR411	MMBD914L	07-6353
• **RESISTORS**		
R001	22.1k, 1%	12-7843
R002	249k, 1%	12-7862
R003	22.1k, 1%	12-7843
R004	1.5k, 1%	12-7878
R011	100 OHM, 1%	12-7840
R013	22.1k, 1%	12-7843
R014	33.2k, 1%	12-7842
R015	10k, 1%	12-7839
R016	22.1k, 1%	12-7843
R017	10k, 1%	12-7839
R021	392k, 1%	12-7841
R022-R023	10k, 1%	12-7839
R024	33.2k, 1%	12-7842
R025	22.1k, 1%	12-7843
R026	1 MEG	10-7028
R101	100k, 1%	12-7834
R102-R103	1 MEG TRIMMER	09-6906
R104	22.1k, 1%	12-7843
R105	100k, 1%	12-7834
R106	10k TRIMMER	09-6921
R111	100 OHM 1%	12-7840
R112	1G	12-7686
R113-R114	100k, 1%	12-7834
R115	1 MEG TRIMMER	09-6906
R116	249k, 1%	12-7862
R121	4.7 MEG	10-7030
R122	1 MEG	10-7028
R123	1G	12-7686
R201	200k TRIMMER	09-6908
R211	1 MEG TRIMMER	09-6906
R212-R213	1 MEG, 1%	12-7844
R214	1 MEG TRIMMER	09-6906
R215	1 MEG, 1%	12-7844
R301	2.21k, 1%	12-7835
R302	200 OHM, 1%	12-7846
R311	10k, 1%	12-7839

R312	22.1k, 1%	12-7843
R313	2.21k, 1%	12-7835
R314	10k, 1%	12-7839
R401	221k, 1%	12-7845
R402	7.5k, 1%	12-7847
R403	1M, 1%	12-7844
R404	5k TRIMMER	09-6907
R406	301 OHM, 1%	12-7863
R407	1k, 1%	12-7832
R411	200 OHM, 1%	12-7846
R412	10k, 1%	12-7839

- **THERMISTORS**

R405	03006-165.9-55G100	07-6366

- **INDUCTORS**

L301	220µH	21-9678

- **TRANSFORMERS**

T321	L8050	40-0902

- **MISCELLANEOUS**

P1	CONN-1-640456-5 MTA100	13-8355
P2	CONN-640456-3 MTA100	13-8081
*	M2222 BD. SHIELD	7390-044
*	RECEPTACLE (8 ea) Cloverleaf 011-6809	18-8771

Processor Board, Drawing 390 x 97

BOARD	Assembled Processor	5390-095

- **CAPACITORS**

C101	0.15µF, 50V	04-5665
C110	47µF, 10V	04-5666
C211-C212	27pF, 100V	04-5658
C221	68µF, 6.3V	04-5654
C311-312	10µF, 20V	04-5655
C321	330pF, 100V	04-5657
C322	68µF, 6.3V	04-5654

- **TRANSISTORS**

Q101	2N7002L	05-5840
Q201	MMBT4403L	05-5842
Q204	2N7002L	05-5840
Q311	MMBT4403L	05-5842

- **INTEGRATED CIRCUITS**

U211-U212	ICM7211AMIQH	06-6294
U311	N87C51FA	06-6286
U321	MAX631AESA	06-6285

- **RESISTORS**

R101	1M, 1%	12-7844
R102	10k, 1%	12-7839
R211	2.21k, 1%	12-7835
R221	150k, 1%	12-7833
R222	100k, 1%	12-7834
R301-R306	22.1k, 1%	12-7843

- **RESISTOR NETWORK**

RN401	220k	12-7831

- **CRYSTALS**

Y211	6.144 MHZ	01-5262

- **SWITCHES**

S301	90HBW06S	08-6710

- **INDUCTOR**

L311	150µH	21-9677

- **MISCELLANEOUS**

P3	CONN-1-640456-6 MTA100	13-8134
P4	CONN-640456-2 MTA100	13-8073
*	SOCKET-44P	06-6293

Calibration Board, Drawing 390 x 100

BOARD	Completely Assembled Calibration Board	5390-096

- **LEDS**

DS1	HLMP4700	07-6356
	LED-SPACER 456-500	07-6349

- **RESISTORS**

R3	250k TRIMMER	09-6819

- **MISCELLANEOUS**

P7	CONN-640456-5 MTA100	13-8057

Display Board, Drawing 390 x 127

BOARD	Completely Assembled Display Board	5390-118

- **CONNECTORS**

DSPI	LCD 7728-365-481	07-6351
J6	CONN-52 POS CP50	13-8410

Interconnect Board, Drawing 390 x 124

BOARD	Completely Assembled Interconnect Board	5390-117

- **CONNECTORS**

J5	CONN-52 POS CP50	13-8410

Chassis Wiring Diagram, Drawing 390 X 103

- **AUDIO**

DS1	UNIMORPH	21-9251

- **CONNECTOR**

J1	CONN-1-640442-5 MTA100	13-8383
J2	CONN-640442-3 MTA100	13-8135
J3	CONN-1-640442-6 MTA100	13-8187
J4	CONN-640442-2 MTA100	13-8178
J7	CONN-640442-5 MTA100	13-8140
J8	Series "C" UG706/U	13-7751

- **SWITCHES**

S1	PA-600-210	08-6501
S2	#923 SWTCHCRFT	08-6518
S4	30-1-PB GRAYHILL	08-6517
S5	7103SYZQE TOGGLE	08-6720

- **BATTERY**

B1-B2	"D" Duracell Battery	21-9313

- **MISCELLANEOUS**

J10	JACK-09-9011-1-0419	18-9080
M1	METER ASSY	4390-136
*	HANDLE ASSY	4408-075

DRAWINGS AND DIAGRAMS

Amp/Power Board, Drawing 390 x 63
Amp/Power Supply Board Component Layout, Drawing 390 x 64

Processor Board, Drawing 390 x 97
Processor Board Component Layout, Drawing 390 x 98

Calibration Board, Drawing 390 x 100
Calibration Board Component Layout, Drawing 390 x 101

Display Board, Drawing 390 x 127
Display Board Component Layout, 2 sheets, Drawing 390 x 128

Interconnect Board, Drawing 390 x 124
Interconnect Board Component Layout, Drawing 390 x 125

Wiring Diagram, Drawing 390 x 103

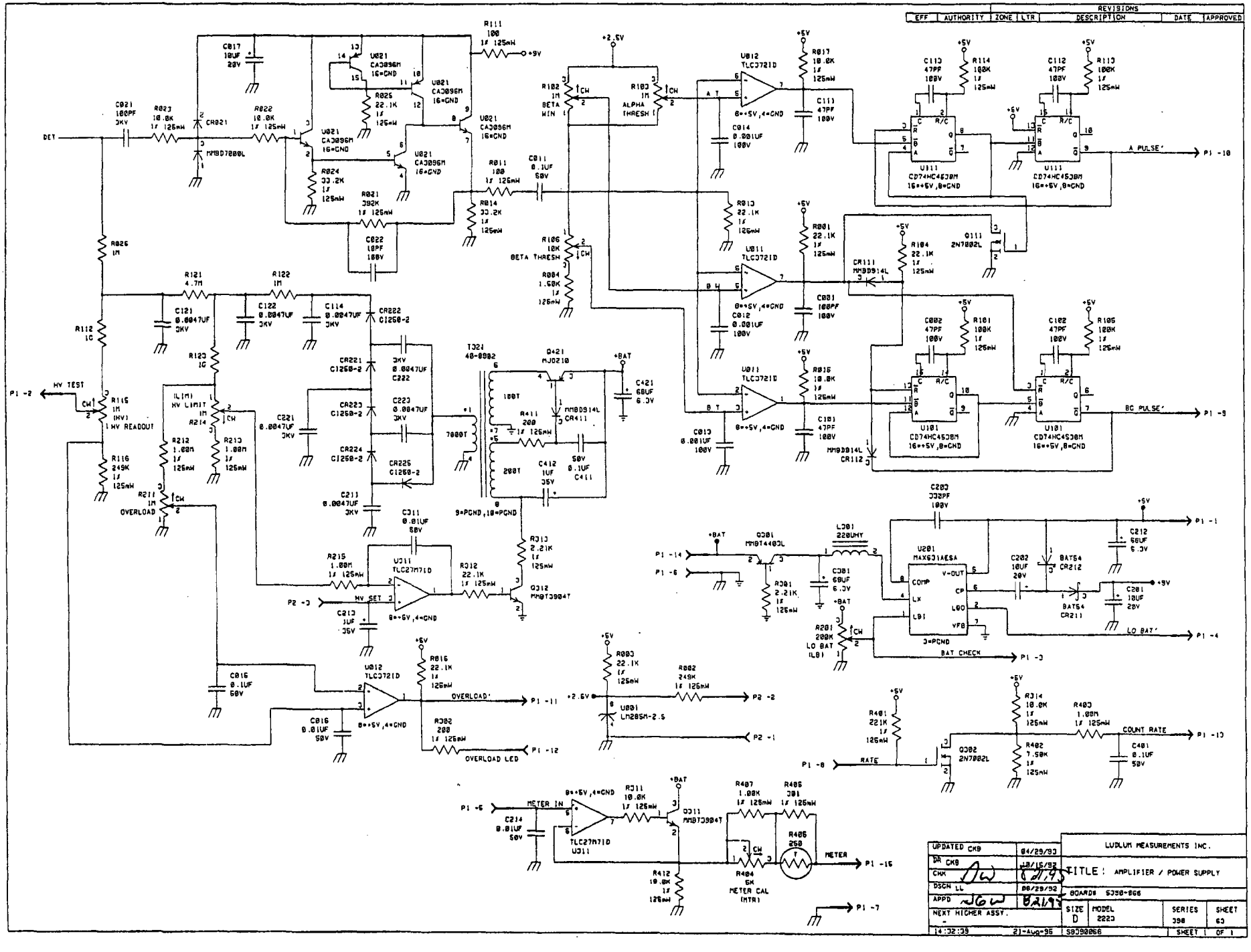
REVISIONS
EFF | AUTHORITY | ZONE | LTR | DESCRIPTION | DATE | APPROVED
DET
HV TEST
P1 -2
HV READOUT
HV LIMIT
OVERLOAD
T321
40-8982
Q421
MJ0210
+BAT
HV SET
P2 -3
OVERLOAD'
P1 -11
OVERLOAD LED
P1 -12
P1 -6
METER IN
TLC27M71D
U311
METER
P1 -16
P1 -7
ALPHA THRESH
BETA WIN
BETA THRESH
A PULSE'
P1 -10
BC PULSE'
P1 -9
U111
CD74HC4538M
16=+5V,8=GND
U101
U011
TLC3721D
8=+5V,4=GND
U021
CA3096M
16=GND
U201
MAX631AESA
COMP
LX
LBI
V-OUT
CP
LBO
VFB
9=PGND
P1 -1
P1 -4
LO BAT'
BAT CHECK
P1 -3
P1 -14
P1 -8
RATE
COUNT RATE
P1 -13
P2 -2
P2 -1
LO BAT
(LBI)
UPDATED CKD
DR CKD
CHK
DSGN LL
APPD
NEXT HIGHER ASSY.
LUDLUM MEASUREMENTS INC.
TITLE: AMPLIFIER / POWER SUPPLY
BOARD# 5350-866
SIZE D
MODEL 2223
SERIES 398
SHEET 63
SHEET 1 OF 1
14:32:39
21-Aug-95
S0390066

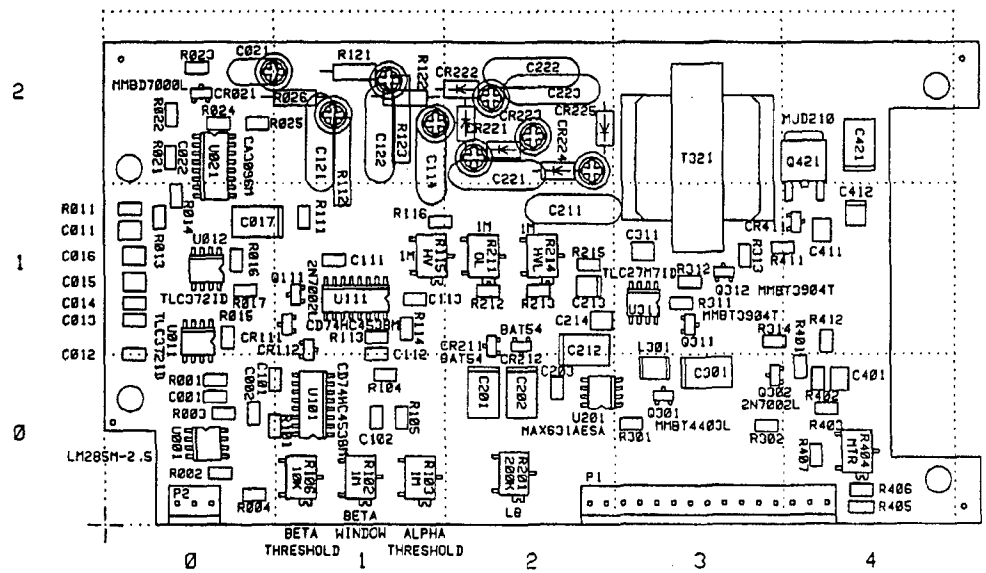

LUDLUM MEASUREMENTS INC. SWEETWATER, TX.					
DR	CKB	04/29/93	TITLE: AMPLIFIER / POWER SUPPLY		
CHK	DW	8/21/93			
DSGN	LL	06/29/92	BOARD# 5390-066		85390066
APP	JGW	8/21/93	MODEL 2223	SERIES 390	SHEET 64
14:33:04 21-AUG-95			COMP SIDE ☐	SLDR SIDE ☐	OUTLINE ☒
COMP PASTE ☐		COMP MASK ☐	SLDR PASTE ☐	SLDR MASK ☐	

REVISIONS						
EFF	AUTHORITY	ZONE	LTR	DESCRIPTION	DATE	APPROVED

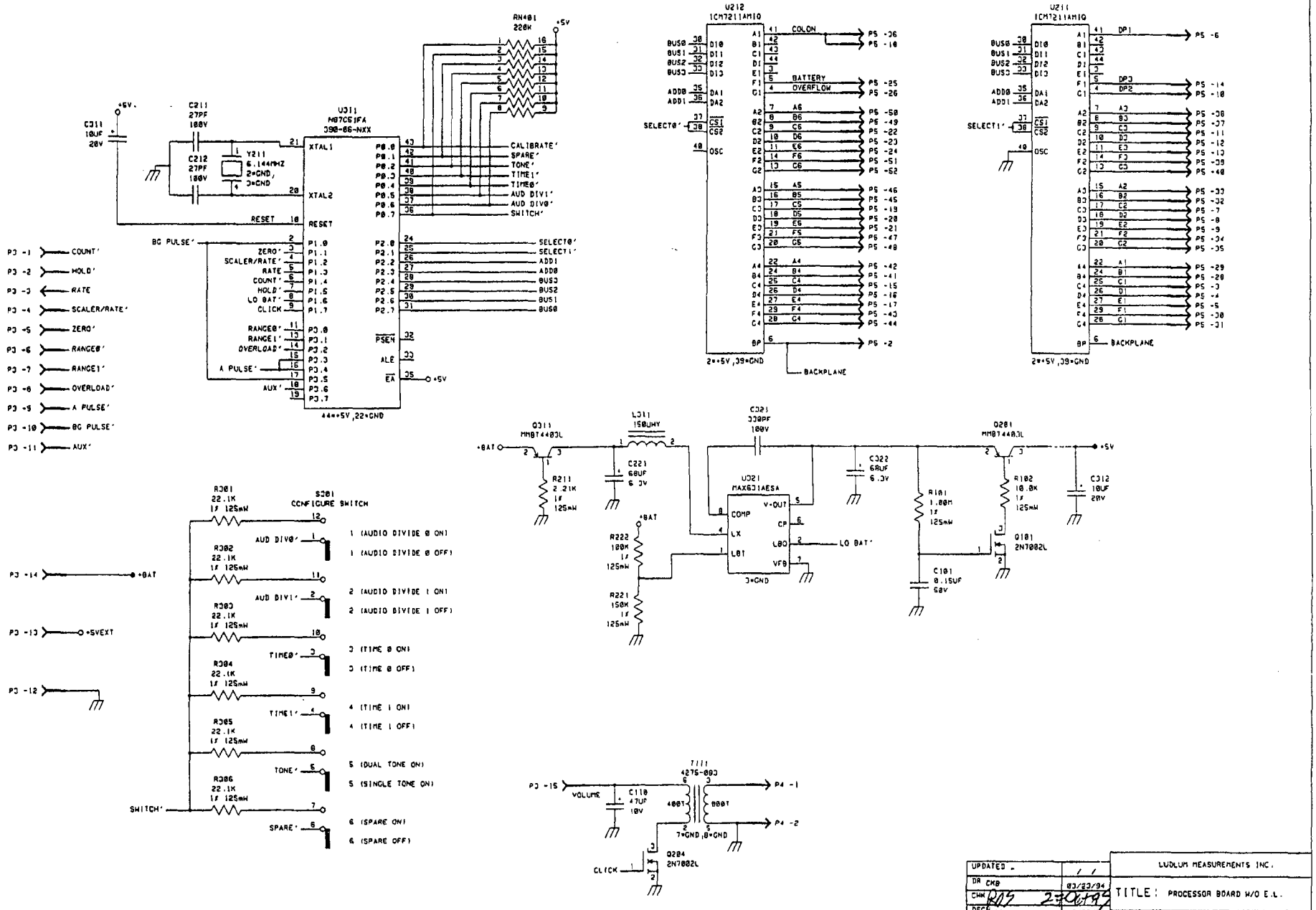

UPDATED -	/ /	LUDLUM MEASUREMENTS INC.
DR CKB	03/23/94	TITLE: PROCESSOR BOARD W/O E.L.
CHK RAS	27 Oct 95	
DSGN LL	12/29/91	BOARD# 5390-095
APPD JGW	10/27/95	SIZE D · MODEL 2224 · SERIES 390 · SHEET 97
NEXT HIGHER ASSY. -		
18:58:29	27-Oct-95	58390095 · SHEET 1 OF 1

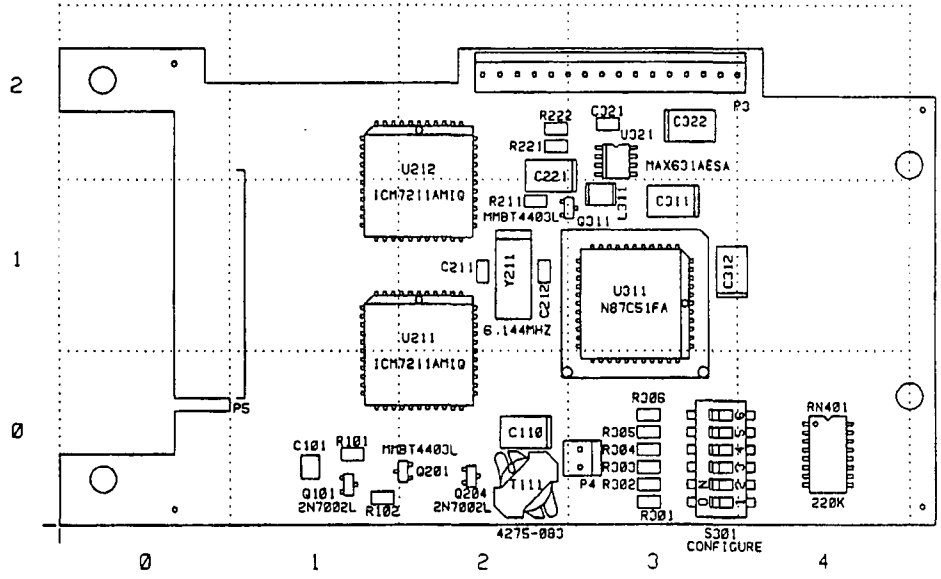

LUDLUM MEASUREMENTS INC. SWEETWATER, TX.					
DR CKB 03/23/94	TITLE: PROCESSOR BOARD W/O E.L.				
CHK RDS 2/24/95					
DSCN LL 8/12/91	BOARD# 5390-095				BS390095
APP JGW 10/27/95	MODEL 2224		SERIES 390		SHEET 98
10:58:46 27-Oct-95	COMP SIDE ☐	SLDR SIDE ☐	OUTLINE ☒		
COMP PASTE ☐	COMP MASK ☐	SLDR PASTE ☐	SLDR MASK ☐		

REVISIONS						
EFF	AUTHORITY	ZONE	LTR	DESCRIPTION	DATE	APPROVED

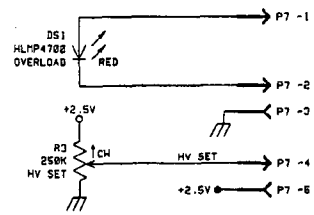

UPDATED -	/ /	LUDLUM MEASUREMENTS INC.	
DR CKB	04/01/94	TITLE: CALIBRATION BOARD	
CHK RDS	27-OCT-95		
DSGN LL	06/12/91	BOARD# 5390-096	
APPD JGW	10/27/95	SIZE D / MODEL 2224	SERIES 390 / SHEET 100.
NEXT HIGHER ASSY. -			
10:59:00	27-Oct-95	58390096	SHEET 1 OF 1

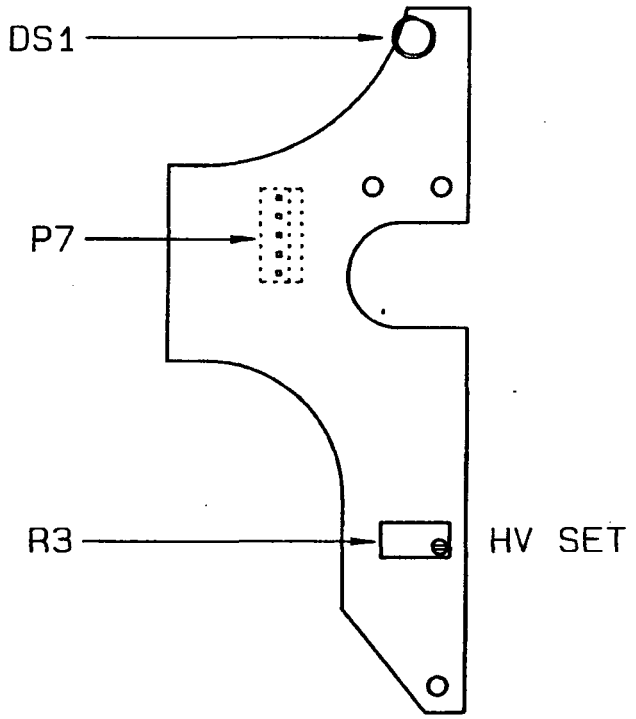

DESC: CALIBRATION BOARD	
MODEL: 2224	
PART #: 5390-096	
DWN: CKB	DATE: 04/01/94
DSGN:	DATE:

DWN CKB	DATE 04/01/94	CHK	DATE 27 Oct 95	APP	DATE 10/31/95
TOL:			SCALE:		
TITLE MODEL 2224 CALIBRATION BOARD					
LUDLUM			390		101

EFF	AUTHORITY	ZONE	LTR	REVISIONS DESCRIPTION	DATE	APPROVED

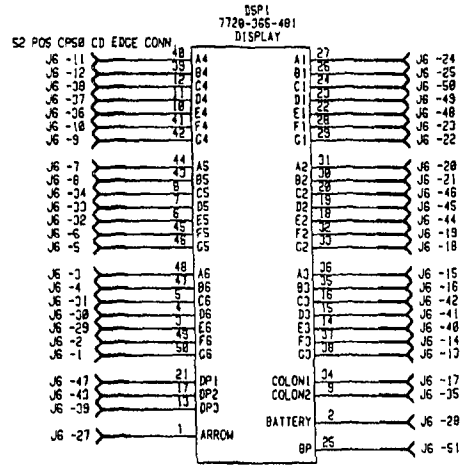

UPDATED -		LUDLUM MEASUREMENTS INC.
DR ACF	02-JUN-99	TITLE: DISPLAY BOARD
CHK PLW	6-2-99	
DSGN JCW	17-JUL-95	BOARD# 5390-118
APPD BS	6-2-99	SIZE C / MODEL 2224/2224-1 / SERIES 390 / SHEET 127
NEXT HIGHER ASSY. -		
18:17:35	2-Jun-99	58390118 / SHEET / OF

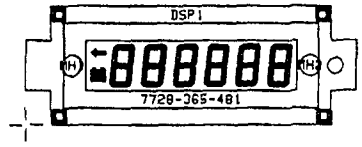

LUDLUM MEASUREMENTS INC. SHEETWATER, TX.			
DR ACF	02-JUN-99	TITLE: DISPLAY BOARD	
CHK		BOARD: 5390-118	
DSGN JGW	17-JUL-95	MODEL: 2224	
APP	6-2-99	FILENAME: BS390118	
COMPONENT	SOLDER	10:21:06	2-Jun-99
OUTLINE	OUTLINE	REVISION 1.0	SERIES 390 / SHEET 128

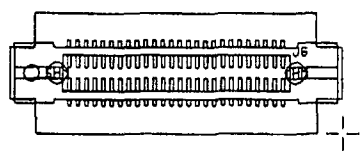

LUDLUM MEASUREMENTS INC. SWEETWATER, TX.					
DR ACF	02-JUN-93	TITLE: DISPLAY BOARD			
CHK PWJ	6-2-93	BOARD# 5390-118			
DSGN JGW	17-JUL-95	MODEL 2224	SERIES 390	SHEET 128	
APP BSS	6-2-93	COMP ARTWORK ☐	SLDR ARTWORK ☐		
		COMP OUTLINE ☐	SLDR OUTLINE ☒		
COMP PASTE ☐	COMP MASK ☐	SLDR PASTE ☐	SLDR MASK ☐		

REVISIONS						
EFF	AUTHORITY	ZONE	LTR	DESCRIPTION	DATE	APPROVED

5390-118
DISPLAY BOARD

M 2224 PROCESSOR BOARD 5390-095
M 2224-1 PROCESSOR BOARD 5390-100
52 POS. CPS0 CD EDGE CONN.

P6 -1	G6	J5 -52
P6 -2	F6	J5 -51
P6 -3	A6	J5 -50
P6 -4	B6	J5 -49
P6 -5	G5	J5 -48
P6 -6	F5	J5 -47
P6 -7	A5	J5 -46
P6 -8	B5	J5 -45
P6 -9	G4	J5 -44
P6 -10	F4	J5 -43
P6 -11	A4	J5 -42
P6 -12	B4	J5 -41
P6 -13	G3	J5 -40
P6 -14	F3	J5 -39
P6 -15	A3	J5 -38
P6 -16	B3	J5 -37
P6 -17	COLON1	J5 -36
P6 -18	G2	J5 -35
P6 -19	F2	J5 -34
P6 -20	A2	J5 -33
P6 -21	B2	J5 -32
P6 -22	G1	J5 -31
P6 -23	F1	J5 -30
P6 -24	A1	J5 -29
P6 -25	B1	J5 -28
P6 -26	EL BACKLIGHT 1	J5 -27
P6 -27	OVERFLOW	J5 -26
P6 -28	BATTERY	J5 -25
P6 -29	E6	J5 -24
P6 -30	D6	J5 -23
P6 -31	C6	J5 -22
P6 -32	E5	J5 -21
P6 -33	D5	J5 -20
P6 -34	C5	J5 -19
P6 -35	COLON2	J5 -18
P6 -36	E4	J5 -17
P6 -37	D4	J5 -16
P6 -38	C4	J5 -15
P6 -39	DP3	J5 -14
P6 -40	E3	J5 -13
P6 -41	D3	J5 -12
P6 -42	C3	J5 -11
P6 -43	DP2	J5 -10
P6 -44	E2	J5 -9
P6 -45	D2	J5 -8
P6 -46	C2	J5 -7
P6 -47	DP1	J5 -6
P6 -48	E1	J5 -5
P6 -49	D1	J5 -4
P6 -50	C1	J5 -3
P6 -51	BP	J5 -2
P6 -52	EL BACKLIGHT 2	J5 -1

UPDATED	-	
DR CKB		07/17/95
CHK	T.W.	6-16-99
DSGN JGW		07/17/95
APPD	ROS	16JUN99
NEXT HIGHER ASSY.		
09:23:52		16-Jun-99

LUDLUM MEASUREMENTS INC.

TITLE: DISPLAY INTERCONNECT BOARD

BOARD# 5390-117

SIZE	MODEL	SERIES	SHEET
C	2224/2224-1	390	124
	S0390117	SHEET 1	OF 1

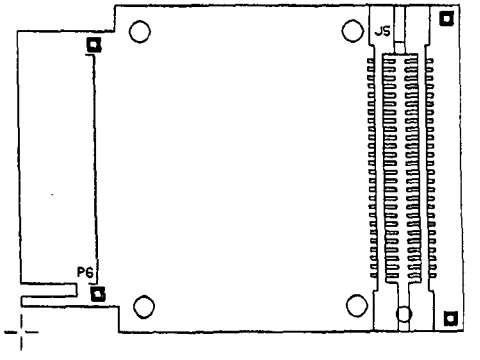

LUDLUM MEASUREMENTS INC. SWEETWATER, TX.			
DR CKB	07/17/95	TITLE: DISPLAY INTERCONNECT BRD.	
CHK Phil	6-2-99	BOARD: 5390-117	
DSGN JGW	07/17/95	MODEL: 2224	
APP RJS	6-2-99	FILENAME: BSJ90117	
COMPONENT	SOLDER	13:34:28	1-Jun-99
		REVISION	SERIES	SHEET
OUTLINE	OUTLINE	1.0	390	125

REVISIONS						
EFF	AUTHORITY	ZONE	LTR	DESCRIPTION	DATE	APPROVED

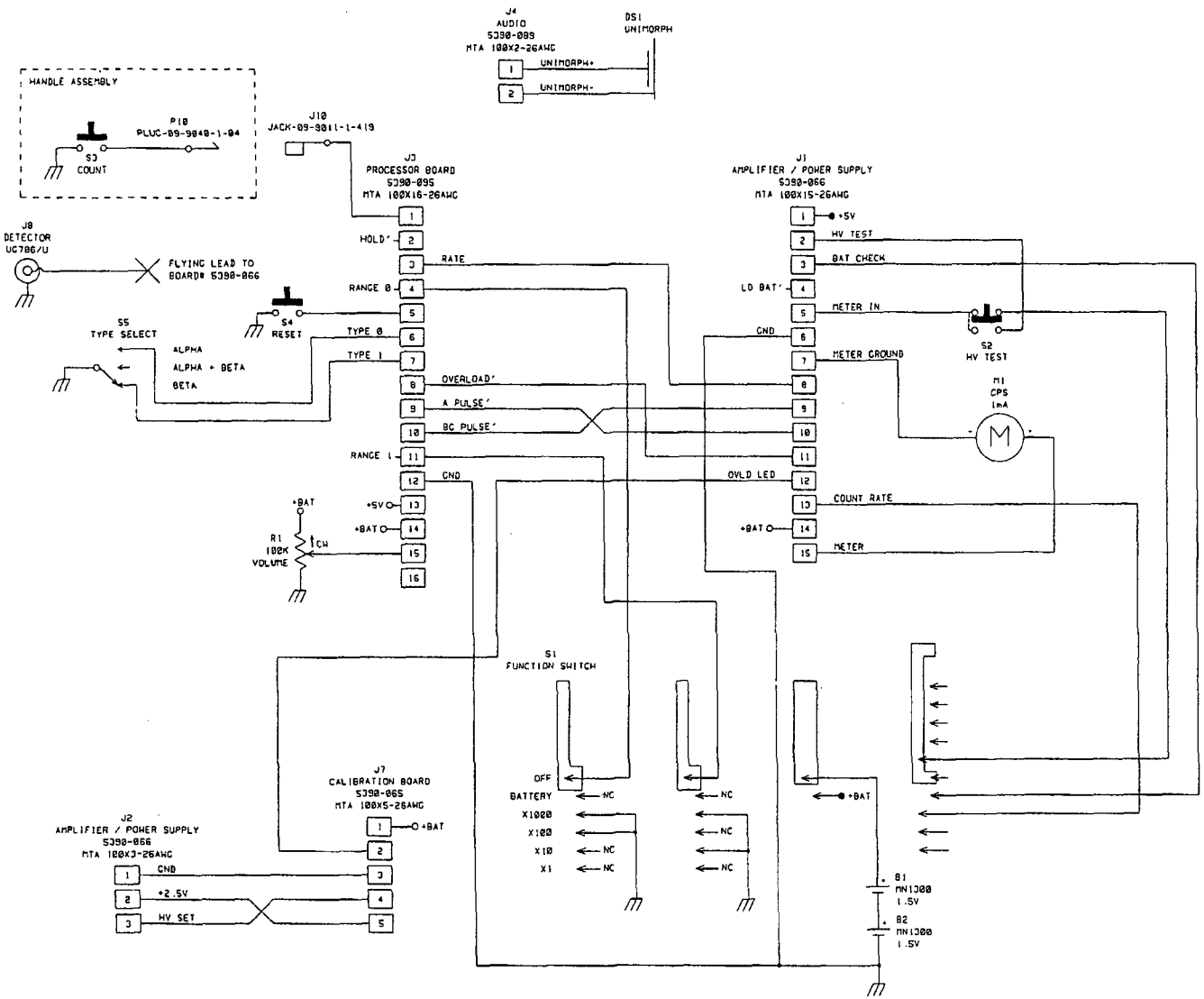

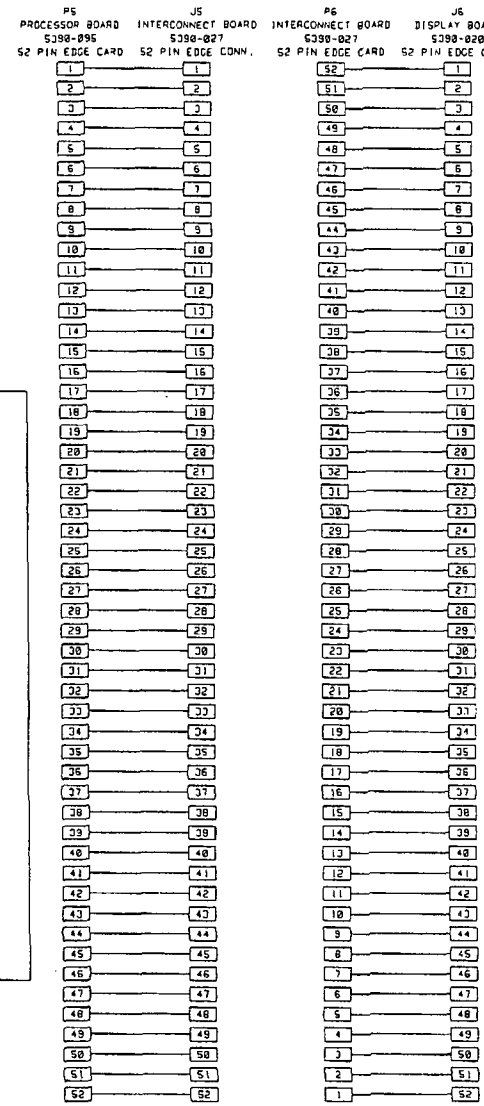

UPDATED	/ /	LUDLUM MEASUREMENTS INC.	
DR CKD	05/18/94	TITLE: WIRING DIAGRAM	
CHK RDS	2-10-95		
DSGN PH	08/31/93	BOARD# 390-038	
APPD JG W	10-2-95	SIZE D / MODEL 2224 / SERIES 390 / SHEET 103	
NEXT HIGHER ASSY. -			
11:00:41	27-Oct-95	M390038	SHEET 1 OF 1

LUDLUM MODEL 2350-1
DATA LOGGER

Calibration Routines,
Parts List, and Schematics
August 1999

LUDLUM MEASUREMENTS, INC.
501 OAK ST., P.O. BOX 810
SWEETWATER, TX 79556
915/235-5494; FAX: 915/235-4672

TABLE OF CONTENTS

1. INITIAL INSTRUMENT CALIBRATION 4
   1.1 Equipment Required 4
   1.2 Instrument Preparation 4
   1.3 Threshold and Window Calibration 4
   1.4 High Voltage Calibration 5
   1.5 Overload Calibration 5
   1.6 Alarm Setpoints 6

2. CALIBRATION ROUTINES 7
   Source Parameters and Typical Values for Dead Time and Calibration Constants . 7
   2.1 High Voltage Ramp Routine 8
   2.2 Calibration Constant and Dead Time Calibration with background subtract 10
   2.3 Calibration Constant Using a Single Point with Background Subtract 12
   2.4 Dead Time Calibration Using 2 Source Method with Background Subtract 14

3. THEORY OF OPERATION 16
   3.1 Amplifier/Power Supply Board 16
   3.2 Central Processor Board 18
   3.3 I/O Interface Board 19
   3.4 64k Memory Expander Board 20

4. PARTS LIST, COMPONENT LAYOUT, AND SCHEMATICS 21
   4.1 Amplifier / Power Supply Board Component Layout 23
   4.2 Amplifier / Power Supply Board Schematic 23
   4.3 Central Processor Board Component Layout 25
   4.4 Central Processor Board Schematic 25
   4.5 64k Memory Expander Board Component Layout 26
   4.6 64k Memory Expander Board Schematic 26
   4.7 I/O Interface Board Component Layout 27
   4.8 I/O Interface Board Schematic 27
   4.9 Backplane Board Component Layout 27
   4.10 Backplane Board Schematic 28
   4.11 Chassis Wireing Diagram 28

1. INITIAL INSTRUMENT CALIBRATION

1.1 Equipment Required

All instruments used in calibrating the Model 2350-1 must be calibrated by standards traceable to the National Institute of Standards and Technology and must have a current calibration label attached.

1. Ludlum Model 500 Pulser.
2. High Impedance voltmeter with at least 1000 megohms meter resistance and an accuracy of 0.5%.
3. Overload simulator (1000 megohm resistor).

1.2 Instrument Calibration

The following procedures will calibrate the electronics only. To program the instrument please refer to section 6. OPERATING INSTRUCTIONS of the Model 2350-1 Data Logger Manual.

WARNING:

The following procedures require that the instrument be re-initialized. This will clear all logged data and return all programmable settings to their default values. **DETECTOR SETUPS AND LOGGED DATA WILL BE PERMANENTLY LOST.**

1. Turn the Model 2350-1 ON. The display will temporarily go black and then the following two displays will appear for a few seconds each. Then the display that was active when the instrument was turned off will appear.

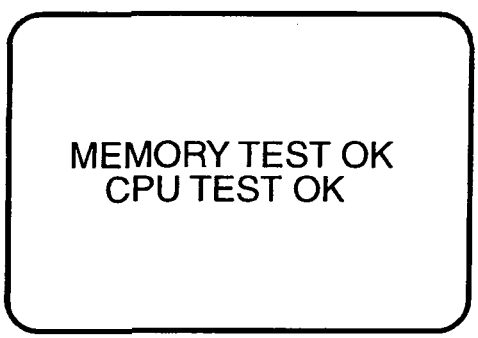

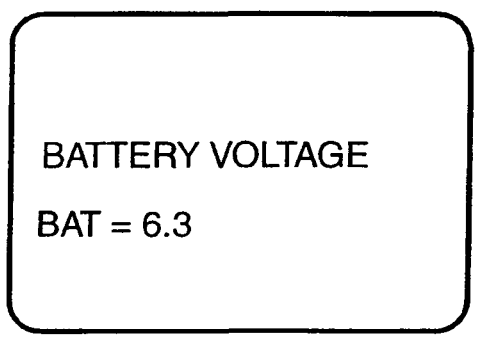

2. Re-initialize the instrument by entering the cold initialize command (**SSR**).
3. Check the battery voltage on the parameters display (**SVD1**). If it reads below 5.5 volts replace the batteries with fresh alkaline batteries and proceed.

Threshold and Window Calibration

4. Change the display time base to minutes (**SB1**) display units to counts (**SU7**), and the threshold to 100 (**T100**).
5. Turn the Model 500 Pulser polarity switch to the negative position.
6. Set the pulse amplitude range selector to the 50 mV position, and the LO-HI control to the maximum clockwise position.
7. Set the pulse frequency multiplier to the 1k position and adjust the pulse frequency so that the output is 400k cpm.
8. Connect the Model 2350-1 to the Pulser and verify that the ratemeter reads between 392-408kC/m.
9. Adjust the pulser amplitude control until the meter reads approximately 10 mV. The ratemeter display should read approximately 75% of the count input (**300 kC/m**).

1. INITIAL INSTRUMENT CALIBRATION

10. If the instrument does not read approximately 300 kC/m adjust the gain pot (R10) on the main board until it reads properly.

NOTE: The instrument threshold is now set at 100 = 10 mV

11. Turn the window ON (**WON**), and set it to 100 (**W100**).
12. Adjust the pulse amplitude control until it reads approximately 20 mV. The ratemeter reading should again indicate approximately 75% of the counts (**300 kC/m**).
13. Adjust the threshold setting to 200 (**T200**), 300 (**T300**), and 400 (**T400**) repeating the above procedure each time to verify that the threshold and window settings are linear.
14. Turn the window off (**WOFF**) and reset the threshold to 100 (**T100**).

High Voltage Calibration

15. Disconnect the instrument from the pulser and connect it to a high impedance voltmeter.
16. Set the high voltage to 1500 volts (**H1500**).
17. If the voltmeter does not read from 1498 - 1502 volts adjust the HV pot (**R52**) on the main board until it reads within tolerance.
18. Adjust the high voltage to 500 volts (**H500**). The voltmeter should read between 490 - 510 volts.
19. Adjust the high voltage to 2000 volts (**H2000**). The voltmeter should read between 1940 - 2060 volts.

Overload Calibration

21. Disconnect the instrument from the voltmeter, and connect it to the overload simulator resistor box.
22. Change to the Alarm Display (**SVD3**).
23. Turn the overload on (**OON**), and set it to 15.0 μA (**O150**).
24. Change to the Parameter Display (**SVD1**).
25. Set the high voltage to 1500 volts (**H1500**).
26. Change to the Main Display (**SVD0**). The ratemeter display at the top of the screen should be alternating between the ratemeter display and the word OVERLOAD at approximately 1 second intervals.
27. If this is not occuring adjust the OVERLOAD pot (**R7**) on the main board until the display alternates properly.
28. Adjust the high voltage to 1000 volts (**H1000**). The overload indicator should stop appearing.
29. Adjust the overlaod to 10.0 μA (**O100**). The OVERLAOD indicator should again begin to alternate with the ratemeter indicator.
30. Repeat steps 28 and 29 again with a voltage setting of 500 (**H500**) volts and an overload setting of 5 μA (**O50**).
31. When properly completed turn the overload alarm off (**OOFF**).

1. INITIAL INSTRUMENT CALIBRATION

1.2 Instrument Calibration (cont.)

Alarm Checkout

1. Connect the Model 2350-1 to the pulser.
2. Set the pulse frequency to 600k cpm.
3. Select the Alarm Display (**SVD3**).
4. Set the integrated dose alarm to 100k cpm (**P1E5**).

NOTE: If an alarm is indicated press the ACK/SCRL button to silence the audio.

5. Select the Main Display (**SVD0**) and zero the integrated dose (**SIZ**). The Integrated dose counter should start counting immediately and an alarm should be indicated when it reaches 100k cpm. After the alarm press the ACK/SCRL button to silence the audio.
6. Select the Alarm Display(**SVD3**) and set the scaler alarm to 60,000 counts (**K60000**).
7. Return to the Main Display (**SVD0**), set the scaler count time to 6 seconds (**F6**), and take a scaler count (**C**). When the scaler reaches 60,000 counts an alarm should again be indicated. Press the ACK/SCRL button again to silence the audio.
8. Adjust the pulse frequency of the pulser to less than 600k cpm.
9. Select the Alarm Display (**SVD3**) and set the ratemeter alarm to 600k cpm (**J6E5**).
10. Select the Main Display (**SVD0**) and readjust the pulse frequency to a setting of 600k cpm. The ratemeter alarm should be triggered. Press the ACK/SCRL button to silence the audio.
11. Verify that the ratemeter (**RAT**), scaler (**SCL**), and integrated dose (**DOS**) indicators are all alternating with the alarm (**ALM**) indicators at 1 second intervals.
12. Select the alarm display (**SVD3**)
13. Set all of the alarms to their default high settings (ratemeter, **J1E9**; scaler, **K1000000**; integrated dose, **P1E9**)
14. Select the Main Display (**SVD0**) and reset all of the alarm indicators (**X**).
15. Disconnect the instrument from the pulser and place it into the instrument can.

The electronics have now been calibrated and functionally checked. All remaining calibration procedures involve setting the programmable parameters of the instrument and are covered in the Model 2350-1 Data Logger Instruction Manual.

2. CALIBRATION ROUTINES

SOURCE PARAMETERS AND TYPICAL VALUES FOR MODEL 2350-1 CALIBRATIONS

To insure that the proper sized sources are used in calculating the calibration constant, and dead time of the Model 2350-1 and detectors the following calculation should be performed.

% Dead Time Loss = No. of source counts in 1 second X Dead Time (in seconds)

The following list provides some typical LO and HI cal points and dead times for various detectors:

TYPICAL DEAD TIME CALIBRATION, AND OVERLOAD POINTS

DETECTOR	LOW POINT	HIGH POINT	OVERLOAD POINT
44-2	500 µR/hr	15 mR/hr	100 mR/hr
44-6	20 mR/hr	400 mR/hr	1 R/hr
44-7	5 mR/hr	100 mR/hr	N/A
44-9	6 mR/hr	200 mR/hr	1 R/hr
44-38	20 mR/hr	400 mR/hr	1 R/hr
44-116	6 mR/hr	60 mR/hr	N/A

TYPICAL DEAD TIME AND CALIBRATION CONSTANT SETTINGS

DETECTOR	DEAD TIME	CALIBRATION CONSTANT
44-2	15 - 25 µsec.	$1.0e^{10}$ - $0.3e^{10}$
44-6	65 - 135 µsec.	$7.09e^{7}$ - $0.65e^{7}$
44-7	250 - 270 µsec.	$1.39e^{8}$ - $0.1e^{8}$
44-9	50 - 120 µsec.	$2.0e^{8}$ - $0.3e^{8}$
44-38	65 - 135 µsec.	$7.09e^{7}$ - $0.65e^{7}$
43-68 Alpha	15 - 25 µsec.	1
43-68 Beta	18 - 26 µsec.	1
43-37 Alpha	18 - 20 µsec.	1
43-37 Beta	19 - 25 µsec.	1

2. CALIBRATION ROUTINES

2.1 High Voltage Ramp Routine

The high voltage ramp routine is useful when a user needs to plateau a detector to determine the proper operating voltage of the detector. The following display will appear when performing the routine.

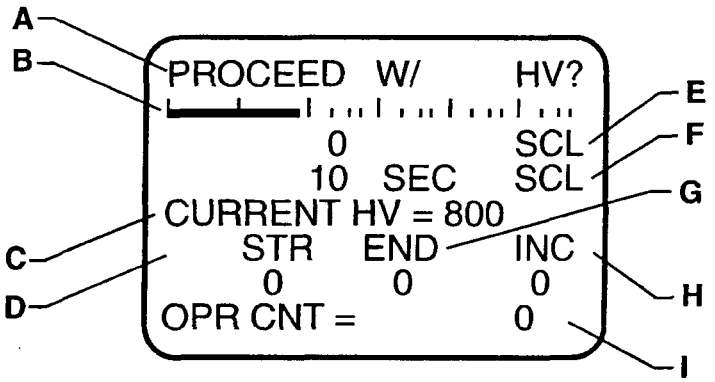

HIGH VOLTAGE RAMP ROUTINE DISPLAY

A. INFORMATION PROMPT: Prompts the user for the parameters required for the ramping routine. When the routine is first started the prompt will ask if the user wants to proceed with the current parameters. If answered YES the instrument will then prompt the user to begin the routine by executing the scaler count command. If answered NO then the following information prompts will appear immediately after the one before is answered.

Starting HV ?
Ending HV?
HV Increment?

The message DUMPING HEADER will then appear momentarily followed by the command "Ent C to start".

B. RATEMETER BARGRAPH DISPLAY: A logarithmic display of the ratemeter reading in cps.

C. HV IDENTIFIER: Identifies the current HV setting.

D. STR: Identifies the starting voltage of the HV ramping routine.

E. SCALER COUNT: Shows the scaler reading in progress.

F. SCALER TIMER: Shows the count time for the scaler. When a count is in progress the timer will show the time remaining in the count.

G. END: Identifies the ending HV setting for the ramping routine.

H. INC: Identifies the increment the voltage will be increased by in each step of the routine.

I. OPR CNT: Identifies the count at the beginning knee of the plateau or the recommended operating voltage.

2. CALIBRATION ROUTINES

The following example demonstrates how to run a plateau on a Model 44-2 Gamma Scintillator.

KEYSTROKES	RESPONSE
Note: Before performing the SHR(x) command, certain parameters must be set. The parameters that need to be set include the threshold, window position, and count time.	
SHR(x) ENTER Where (x) = the number 0 or 1. 0 = Disables data dump to the serial port. 1 = Enables data dump to the serial port.	The Model 2350 display will show the detector display with the current set of detector parameters. There will be no prompt but you will need to select a set of parameters to use in the routine. If the current parameters are correct press "Y ENTER", otherwise select the set of detector parameters that you want to use and then press "Y ENTER". The instrument will proceed with the routine by displaying the screen shown on the opposite page.
N ENTER	This answers the prompt "PROCEED W/ HV" allowing the user to change the parameters of the routine.
500 ENTER	This set the beginning high voltage at 500 volts.
1000 ENTER	This sets the ending high voltage at 1000 volts.
25 ENTER	This sets the HV increment to 25 volts. (This increment is the amount that the high voltage setting will change between each step of the ramping routine.)
C ENTER	This activates the routine by starting the scaler counting.

"SHR0" will run the plateau routine, determine the operating votage, but will not dump data to the RS-232 port. "SHR1" will run the plateau routine, determine the operating voltage, and will dump the voltage setting and scaler count at each increment of the plateau routine.

When the routine is complete the following prompt will appear:
"SAVE? HV = XXX"

"Y ENTER" will save the voltage as the operating voltage of the detector and the instrument will return to the screen that was active prior to the exucution of the routine. "N ENTER" will return to the screen that was active prior to the exucution of the routine without saving the voltage.

2. CALIBRATION ROUTINES

2.2 Calibration Constant and Dead Time Calibration with Background Subtract

This routine will use a two point (low-hi) method to calculate the calibration constant and dead time of the detector. The following display will appear when performing the routine.

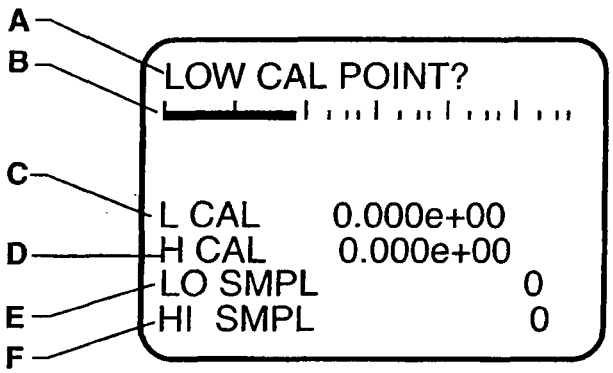

CALIBRATION CONSTANT/DEAD TIME ROUTINE DISPLAY

A. INFORMATION PROMPT: Prompts the user for the parameters required for the routine. When the routine is first started the prompt will prompt the user low calibration point. Once entered it will prompt for the following parameters in order.

HI CAL POINT
TAKE BACKGROUND
TAKE LOW SAMPLE
TAKE HI SAMPLE
SAVE NUMBERS?

B. RATEMETER BARGRAPH DISPLAY: A logarithmic display of the ratemeter reading in cps.

C. L CAL: Identifies the low calibration point that will be used in the routine.

D. H CAL: Identifies the high calibration point that will be used in the routine.

E. LO SMPL: Shows the reading obtained from the low sample source.

F. HI SMPL: Shows the reading obtained from the high sample source.

NOTE: Line 1 will indicate the ratemeter reading when a sample is being taken, and lines 3 and 4 will show the scaler taking a count. When the routine is complete Line 3 will display the calculated calibration constant, and line 4 will show the calculated dead time constant. These numbers will be saved into the active detector setup if the user answers yes to the prompt to save the numbers.

2. CALIBRATION ROUTINES

The following example will calculate the cal constant and dead time of a Model 44-2 Gamma Scintillator in R/hr.

KEYSTROKES	RESPONSE
SKB ENTER	The Model 2350-1 will show the calibration constant/dead time routine with background subtract control display with a prompt to set the low cal point.
5e-4 ENTER	This will set the lower calibration point at 500 μR/hr, then a prompt will appear for the hi cal point.
15e-3 ENTER	This will set the high calibration point at 15 mR/hr, then a prompt will appear to take a background sample.
C ENTER	This will initiate the scaler to take a background reading, then a prompt will appear to take the low sample count. Place a 1 μCi ^{137}Cs check source on the end of the detector.
C ENTER	This will initiate the scaler to take a count with the low sample source, then a prompt will appear for the hi sample count. Place a 5 μCi ^{137}Cs check source on the end of the detector.
C ENTER	This will initiate the scaler to take the hi sample reading.

NOTE: The SSK command initiates the same routine as stated above except that the background count is not taken or considered when determining the calibration constant and dead time of the system.

ADDITIONAL PARAMETERS

1. The background count should be less than 2% of the low sample count.
2. The low sample count should have at least 15,000 counts.
3. The high sample should be at least 100 times the low sample and produce between 30 - 60% dead time loss.

2. CALIBRATION ROUTINES

2.3 Single Point Calibration Constant Routine with Background Subtract

This routine will use a single point method to calculate the calibration constant of the detector. The following display will appear when performing the routine.

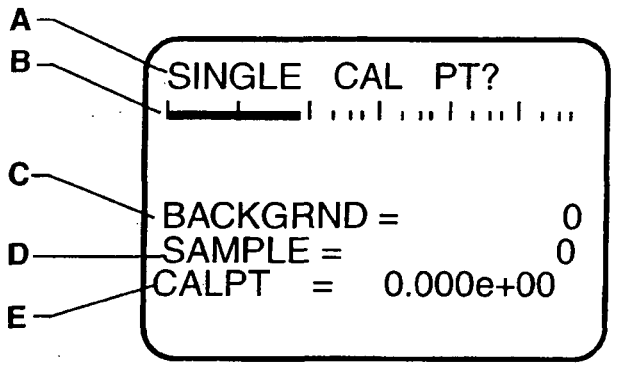

CALIBRATION CONSTANT/DEAD TIME ROUTINE DISPLAY

A. INFORMATION PROMPT: Prompts the user for the parameters required for the routine. When the routine is first started the prompt will prompt the user single calibration point. Once entered it will prompt for the following parameters in order.

TAKE BACKGROUND
TAKE SAMPLE
SAVE CAL CNST?

B. RATEMETER BARGRAPH DISPLAY: A logarithmic display of the ratemeter reading in cps.

C. BACKGRND: Identifies the background reading obtained during the routine.

D. SAMPLE: Identifies the sample count taken during the routine.

E. CALPT: Identifies the reference calibration point set for the routine.

NOTE: Line 1 will indicate the ratemeter reading when a sample is being taken, and lines 3 and 4 will show the scaler taking a count. When the routine is complete Line 8 will display the calculated calibration constant. This number will be saved into the active detector setup if the user answers YES to the prompt to save the number.

2. CALIBRATION ROUTINES

The following example will calculate the cal constant of a Model 44-2 Gamma Scintillator in R/hr.

KEYSTROKES	RESPONSE
SSB ENTER	The Model 2350-1 will show the single point calibration constant routine with background subtract control display with a prompt to set the single cal point.
5e-4 ENTER	This will set the single calibration point at 500 μR/hr, then a prompt will appear to take a background reading.
C ENTER	This will initiate the scaler to take a background count, then a prompt will appear for the sample count. Place the detector in a 500 μR/hr field.
C ENTER	This will initiate the scaler to take the single sample reading.

NOTE: The SSS command initiates the same routine as stated above except that the background count is not taken or considered when determining the calibration constant.

2. CALIBRATION ROUTINES

2.4 Two Source Dead Time Calibration Routine with Background Subtract

This routine will use a single point method to calculate the calibration constant of the detector. The following display will appear when performing the routine.

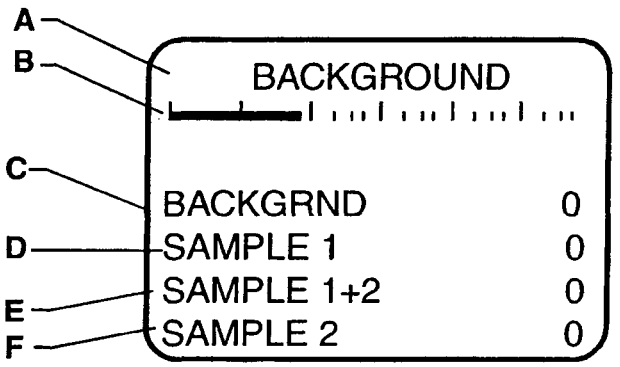

CALIBRATION CONSTANT/DEAD TIME ROUTINE DISPLAY

A. INFORMATION PROMPT: Prompts the user for the parameters required for the routine. When the routine is first started the prompt will appear for the background count. Once entered it will prompt for the following parameters in order.

SAMPLE 1
SAMPLE 1+2
SAMPLE 2
SAVE DEAD TIME?

B. RATEMETER BARGRAPH DISPLAY: A logarithmic display of the ratemeter reading in cps.

C. BACKGRND: Identifies the background count taken during the routine.

D. SAMPLE 1: Identifies the sample count taken with source 1 during the routine.

E. SAMPLE 1 +2: Identifies the sample count taken with sources 1 & 2 during the routine.

F. SAMPLE 2: Identifies the sample count taken with source 2 during the routine.

NOTE: Lines 3 will show a timer and line 4 will show the word COUNTING when a count is in progress. When the routine is complete Line 3 will display the calculated dead time for the detector. This number will be saved into the active detector setup if the user answers YES to the prompt to save the number.

2. CALIBRATION ROUTINES

The following example will calculate the dead time of a Model 44-2 Gamma Scintillator in R/hr.

KEYSTROKES	RESPONSE
SSD ENTER	The Model 2350-1 will show the dead time calibration routine with background subtract control display with a prompt to take a background reading.
C ENTER	This will initiate a count to get a background sample, then a prompt will appear to take a reading from sample 1.
C ENTER	This will initiate count for sample 1, then a prompt will appear for a count with samples 1 & 2.
C ENTER	This will initiate a count of samples 1 & 2 together, then a prompt will appear for a count with sample 2 only.
C ENTER	This will initiate a count of sample 2 only.

ADDITIONAL PARAMETERS

1. The sources used for this test should be approximately the same size and each should provide a minimum of 25,000 cpm.
2. When combined the sources must provide a between 25 - 60% dead time loss.

3. THEORY OF OPERATION

3.1 AMPLIFIER/POWER SUPPLY BOARD #5371-002

3.1.1 INPUT

Negative going pulses are coupled from the detector through C9 to emitter follower Q1. CR6 is a voltage reference which provides a bias voltage of approximately +3.3 Vdc to Q1 via R45. R9 protects Q1 from input inadvertent shorts/ transients. R40 couples the detector to the high voltage supply (HV).

3.1.2 AMPLIFIER

U3 is a self-biased amplifier which provides gain in proportion to R12 divided by the series combination of R11 and R10. R10 is adjusted to provide a pulse height in proportion to a given threshold setting at comparator U4 (typically adjusted to trigger with a detector input pulse of 10 millivolts at a threshold setting of 100). Transistor (pins 4, 5, and 6 of U3) provide amplification and pulse polarity inversion. Transistor pins 10 through 15 are coupled as a constant current source to pin 6 of U3. The output self-biases to 2 Vbe — approximately 1.4 Vdc at pin 7 of U3. This provides just enough bias current through pin 6 to conduct all of the current from the constant current source. Positive pulses from pin 7 are coupled to the Window and Threshold comparators, U4.

3.1.3 WINDOW/THRESHOLD

Threshold (THR) comparator, pins 5, 6, and 7 of U4, provides the lower pulse height discrimination. Pulses are AC coupled from amplifier U3 via C23 to pin 6 of U4. THR reference voltage data from the microprocessor board (µP) is processed by digital to analog convertor (DAC) U6 and coupled to pin 5 of U4 via opamp U5. R54 and C13 provide additional filtering of the reference voltage. THR reference Vdc is approx. +122 millivolts (mV) with the THR set at 100 on display — 1.222 Vdc at a THR setting of 1000. As the pulse height at pin 6 of U4 increases above the reference voltage at pin 5, pin 7 — normally high (approx. +5 Vdc) goes low for the pulse duration.

Window (WIN) comparator, pins 1, 2, and 3 of U4 provide the upper pulse height discrimination. Pulses are coupled from amplifier U3 to pin 2 of U4. WIN reference voltage data from the µP is processed by DAC U6 and coupled to pin 3 of U4. Q2 applies approx. +5 Vdc to the WIN reference to disable the WIN comparator when the WIN OFF signal is applied to the base of Q2. The WIN reference voltage rides on top of the THR reference — i.e., with a THR and WIN setting of 100, the WIN reference at pin 3 of U4 will equal approx. +122 mV referenced above the THR at pin 5 or approx. +244 mV referenced to chassis ground. If the THR is increased to 200 and the WIN still remains at 100 the WIN reference will still equal approx. +122 mV referenced to the threshold but will increase to approx. +366 mV when referenced to ground (THR = 244 mV + 122 mV WIN = 366 mV). As the pulse amplitude increases above the WIN reference voltage, pin 1 of U4 goes low for the pulse duration.

3.1.4 WINDOW/THRESHOLD LOGIC CIRCUIT

Negative pulses from the THR comparator are coupled to univibrator U9. Negative, pulses (approx. 5 volt) are present at univibrator output pin 7 of U9 (PULSE') as long as pins 13 and 3 remain high. When a WIN pulse is present at pins 13 and 3 the Reset function is enabled which disables the PULSE' output locking pin 7 high. Pulses are connected from pin 7 to the µP on the Central Processor Board for count processing. Pin 7 is tied back to pin 13 via CR1 to provide a time delay (approx. 8 to 10 µs) for the µP clock cycle to complete before the next pulse can be recognized by the micro-processor.

3.1.5 DIGITAL TO ANALOG CONVERTORS

U6 and U7 are digital to analog convertors (DAC) which convert the digital data from the µP to analog signals to control the THR, WIN, High Voltage Reference (HV REF), and Overload Reference (OVR REF) variables. Data via BUS0-BUS3 and A0-A2 is loaded into the DAC latches for U6 and U7 by strobing CE3' and CE4' (Chip Select). CE5' (Up Date) is then strobed to transfer the data stored in the latches to the DAC outputs.

3.1.6 HIGH VOLTAGE SUPPLY AND DETECTOR OVERLOAD

Detector High Voltage (HV) is developed by blocking oscillator Q3, T1, C29 and rectified by voltage multiplier CR3-CR5, CR14, CR15, C5, C32, C37, and C38. Q4, CR13, and R41 provide a regulated voltage of approx. 4.4 Vdc (battery voltage must be +4.4 Vdc) to the emitter of Q3. HV increases as current through Q5 increases with maximum output voltage with Q5 saturated.

HV is coupled back through R5, through voltage follower U1, to pin 6 of U2 to complete the regulation loop. Resistors R52 and R6 complete the HV divider network to ground. HV regulation is produced by opamp comparator pins 5, 6, and 7 of U2. During stable operation the voltage at pin 6 will equal pin 5. If HV REF is increased, pin 7 of U2 will increase increasing conduction of Q5 until the voltage at pin 6 equals pin 5 of U2 via HV divider network, R5, R52, and R6. R52 is adjusted to calibrate the HV output to the HV REF signal supplied to pin 5 of U5 by the DAC — HV REF is set at approx. 1500 mV by entering the "H1500" command into the Model 2350-1, the HV CAL is adjusted for 1500 Vdc at the detector connector. C1-C3, C8-C7, C19, and C27 provide additional filtering of the HV output.

Detector Overload is achieved by measuring the voltage differential across R4. As current is increased into the detector, a voltage drop is produced across R4. The HV on either side of R4 is converted to a low voltage by resistor divider networks R5, R52, R6, and R44, R7, and R43. The voltage differential is coupled to differential opamp, pins 12-14 of U1, via opamp buffers. The differential output is coupled to opamp comparator, pins 8- 10 of U1. OVR REF is provided by the µP via the DAC — OVERLOAD' is coupled back to the µP. R7, CURRENT CAL, calibrates the detector current drain to the OVR REF input — i.e., a 10µA load is connected to the detector output; the overload is set to "100" by entering the "O100" command (approx. 610mV at OVR REF), R7, CURRENT CAL, is then adjusted until pin 8 or U1 just starts to trigger low.

3.1.7 LOW VOLTAGE SUPPLY

Supply voltages of +5 and -10 Vdc are supplied by U8, T2, and supporting components. U8 is a switching regulator with an on-board comparator providing regulation. An internal voltage reference of 1.0 Vdc maintains the inverting and non-inverting comparators at 1.0V via the feedback loop. Oscillator frequency, set by C36, is approx. 100 kHz at pin 5 of U5. CR11 and C26 provide rectification and filtering for the +5V output. CR12 and C25 provide rectification and filtering for the -10V output.

U11 is a -2.5 Vdc voltage reference for the DAC's — U6 and U7. C8 located on the Backplane board maintains the battery voltage charge during inadvertent battery disconnection (mechanical shock).

3.1.8 LCD VIEWING ANGLE SUPPLY

U2 is configured as a differential opamp which controls the backplane voltage to adjust the viewing angle for the LCD graphics display. Output voltage, pin 1 of U2 is adjustable from 0 to -10 Vdc by varying R50 (VIEWING ANGLE). LCD backplane variance due to temperature is compensated by CR10.

3. THEORY OF OPERATION

3.2 CENTRAL PROCESSOR BOARD #5371-068

3.2.1 MICROPROCESSOR (µP)

U124, Intel 80C51FA, is the Model 2350-1 central processor. The µP clock frequency is crystal controlled by Y159 and related components at 6.144 MHZ. C172 resets the µP at power-up to initiate the start of the program routine. The main program routine is stored in EPROM, U122. User parameters and logged data is stored in the 8k X 8 RAM, U123. (replaced with 64k X 8 RAM located on the Memory Expander board)

Address and data information are multiplexed by latch U121 from the µP to the two memory chips. The low address bits A0-A7 are multiplexed with the data bus, BUS0-BUS7, out of the µP. U121 latches the address data AO-A7 on lines BUS0-BUS7 during the first part of the external memory cycle when the ALE input is strobed.

The HD175 ACCESS shunt configures the µP parameter access mode and password. When pins 1 and 2 are shunted (default) the access parameters is determined by the settings preset in the EPROM and the password entered in RAM. If shunt is placed between pins 2 and 3 the password is set to "0" and the access level is set to "3".

The ACKNOWLEDGE' input is pulled low when the front panel ACKNLDGE pushbutton switch is depressed silencing the audible alarm(s). The OVERLOAD' signal from the AMP/PS board instructs the µP to initiate an OVERLOAD condition. WIN OFF' is an output signal from the µP to the AMP/PS board which disables the Window feature.

The TONE' input comes from the I/O processor which toggles the TONE'/ALARM line low when the external bar code wand registers bar code information. The TONE' and ALARM' (µP output signal from pin 5 of U124) signals initiate an independent audible tone by changing the CV (control voltage) input on the ICM7556 timer, U118.

The READY, CLEAR SEND, RECEIVE, and XMIT data lines communicate the RS-232 and bar code reader wand information from/to the I/O processor to/from the central processor. The RESET output at pin 13 of U124 is coupled to the I/O board to reset the I/O processor. Q174 inverts the RESET signal (RESET') providing a reset line for the LCD graphics display. The PULSE' input supplies the pulses from the AMP/PS board to be counted and converted into data by the µP.

3.2.2 BATTERY VOLTAGE VFC

Un-switched (connected directly to batteries) battery voltage — +BATUNS — is divided by resistor divider network R148 and R149 and connected to voltage to frequency convertor (VFC), U125. VFC OUT is connected to a counter inside the µP which counts the frequency for a preset time converting to a number displayed on the LCD representing the battery voltage. R130, BAT CAL, adjusts the VFC frequency output to calibrate the LCD BAT reading to the actual battery voltage.

NOTE: Disregard sections 3.2.3 and 3.2.4 for the Model 2350-1

3.2.3 RECORDER DRIVE CIRCUIT

The RCDR output from the µP is coupled to MOSFET transistor Q126. The µP uses pulse-width modulation for the recorder signal. The pulse-modulated signal is integrated by R144 and C100. Pins 5, 6, and 7 of U126 "buffers" the integrated voltage from R131. R131 provides calibration of the recorder output voltage. Pins 1, 2, and 3 of U126 are configured as an opamp voltage follower providing recorder drive.

3.2.4 ADDRESS DECODER/VOLTAGE BACKUP

U120 is address decoder which generates the chip enable signals — CEO-CE7 — by monitoring address lines A13-A15. U120 also provides battery backup, +5VBACK, to the Clock chip U119 and the RAM U123. This enables the user to change the instrument batteries without losing RAM memory. +BATUNSR supplies battery voltage to CR112 voltage reference to limit the voltage at 5.1 Vdc. The 5.1 Vdc is coupled to a 0.1

farad capacitor through CR113. CR113 prevents C129 from discharging through the +BATUNSR line when the batteries are removed.

3.2.5 CLOCK CHIP

U119 provides the time and date information used in conjunction with the logged data. U119 is crystal controlled by Y158 and supporting components C102 and C103 at 32.786 kHz. The 10 Hz output at pin 13 of U119, provides the timing frequency to the µP.

3.2.6 AUDIO CIRCUIT

Pulses are coupled from the AMP/PS board to U128 — RDD 104 decade divider chip. AUDIO DIVIDE (front panel) by "1" switch position jumpers the PULSE' input directly to the CLICK' input to the timers. Divide by "10" and "100" switch positions connect the DIV OUT of U128 to the CLICK' input using U128 for pulse division. U118, a dual package 7555 timer, provides audio oscillation. Pulses (CLICK') are coupled to the first timer, pins 1-6 of U118, via C97. This timer is configured as a monostable multivibrator (one-shot) producing a fixed pulse-width for each input pulse at pin 6 of U118. Pulse-width is set by R161 and C95. CR114 limits pulse input to pin 6 of U118 to 5.6 volts; R134 is a pull-up resistor for the AC coupled pulse. The second half of U118 is configured as a astable (free-running) multivibrator which produces the audible tone — frequency is set by R133 and C96.

T157 provides amplification of the audio signal driving the unimorph speaker. Audio volume is varied by adjusting the voltage on top of the primary winding of T157 via the front panel volume control. When an ALARM' is initiated maximum voltage applied by saturating Q154.

3.3 I/O INTERFACE BOARD #5371-063

3.3.1 MICROPROCESSOR (µP)

U15, Intel 80C51FA, communicates and processes information bi-directionally from/to the RS-232 interface (U13) to/from the central processor via the serial interface lines XMIT, READY, RECEIVE, and CLEAR SEND. U15 also decodes information from the bar code reader (WAND) and sends information to central processor. The µP clock frequency is crystal controlled by Y159 and related components at 6.144 MHZ.

U14, EPROM, stores the program for the I/O µP. U14 incorporates on-board latches to separate the multiplexed address and data buss lines.

CR26-CR28 provide "clipping" of transients which may be produced at the SERIAL I/O port.

3.3.2 RS-232 INTERFACE

U13, MAX232, is a +5 Vdc powered RS-232 driver/ receiver used to interface the Model 2350-1 to a computer or keypad terminal. U13 incorporates on-board voltage multipliers which generate the +10 and -10 volts required for RS-232 communication.

3.3.3 BACKLIGHT DRIVE

The LCD backlight is illuminated by appling power to +EL POWER when front panel BACKLIGHT switch is ON. With battery voltage applied to +EL POWER, blocking oscillator — Q23, T1 and supporting components begin oscillating. The signal is amplified by T1 to provide a 70VAC signal to drive the LCD backlight. R30, a 10 ohm resistor, limits the power-up surge to the oscillator circuit.

3. THEORY OF OPERATION

3.4 64k MEMORY EXPANDER BOARD #5371-054

NOTE: When the MEMORY EXPANSION board is added, U120 (DS1211) and U123 (CDM6264) on the CENTRAL PROCESSOR board must be removed. The red entries in the CENTRAL PROCESSOR theory of operation should be removed/or inserted for the M2350-1.

U119 is a 128k RAM (only 64k is used) used to store user parameters and logged data. U119 is selected by the central µP by applying a logic "high" to the RAM input, Pin 30 of U119. The Recorder circuit is disabled on the Central Processor board and the RCDR output on the central µP is used to enable the Memory Expansion board RAM.

U117 is address decoder which generates the chip enable signals — CE1-CE7, E1 — for the DAC's on the AMP/PS board and the Clock chip on the Central µP board by monitoring address lines A12-A14 from the central µP.

U115 provides battery backup, +5VBACK, to the Clock chip (U119) on the Central µP board and the RAM. This enables the user to change the instrument batteries without losing the RAM memory. U115 also provides a RESET signal which goes low when the +5V supply to pin 2 of U115 drops below a preset threshold (4.5-4.75 volts). This opens U116 analog switches disabling the RAM and CLOCK' signals from the data bus to save the parameter and logging memory.

4. PARTS LIST, COMPONENT LAYOUTS, AND SCHEMATICS

AMPLIFIER / POWER SUPPLY BOARD

Ref. No.	Description	Part No.
CAPACITORS		
C1-C3	0.0056μF, 3kV	04-5522
C4	0.1 μF	04-5521
C5	0.0015 μF, 3kV	04-5518
C6-C8	0.0056 μF, 3kV	04-5522
C9	100 pF, 3kV	04-5532
C10	10 μF	04-5592
C11-C12	100 pF	04-5527
C13	0.01 μF	04-5523
C14	47 pF	04-5533
C15	100 μF	04-5576
C16	220 pF	04-5530
C17	100 pF	04-5527
C18-C19	0.0056 μF, 3kV	04-5522
C20-C21	33 pF	04-5616
C22	0.01 μF	04-5523
C23	0.1 μF	04-5521
C24	0.0056 μF, 3kV	04-5522
C25	22 μF	04-5579
C26	220 μF	04-5639
C27	0.0056 μF, 3kV	04-5522
C28	100 pF, 3kV	04-5532
C29	0.01 μF	04-5523
C30	100 μF	04-5576
C31	100 pF	04-5527
C32	0.0015 μF, 3kV	04-5518
C33	33 pF	04-5616
C34	1 μF	04-5575
C35-C36	0.001 μF	04-5519
C37-C38	0.0015 μF, 3Kv	04-5518
C39	10 μF	04-5592
C40	0.1 μF	04-5521
C41	33 pF	04-5616
C42	0.01 μF	04-5523
DIODES		
CR1-CR2	1N4148	07-6272
CR3-CR5	MR250-2	07-6266
CR6	1N5226	07-6260
CR7	1N5819	07-6306
CR8-CR10	1N4148	07-6272
CR11-CR12	1N5819	07-6306
CR13	1N4148	07-6272

4. PARTS LIST, COMPONENT LAYOUTS, AND SCHEMATICS

Ref. No.	Description	Part No.
DIODES		
CR14-CR15	MR250-2	07-6266
CR16-CR18	1N4148	07-6272
TRANSISTORS		
Q1	2N3904	05-5755
Q2	MPS6534	05-5763
Q3	MPS-U51	05-5765
Q4	MPS-U01	05-5778
Q5	2N3904	05-5755
RESISTORS		
R1	10kohm, 333MW	12-7748
R2	47 ohm, 333MW	12-7756
R3	56 kohm, 333MW	12-7789
R4	4.7 Mohm	10-7030
R5	1 Gohm	12-7686
R6	470 kohm, 333MW	12-7757
R7	1 Mohm, pot	09-6828
R8	100 kohm, 333MW	12-7747
R9	10 kohm, 333MW	12-7748
R10	100 kohm, pot	09-6823
R11	1 kohm, 333MW	12-7750
R12	470 kohm, 333MW	12-7757
R13-R14	10 kohm, 333MW	12-7748
R15	1 kohm, 333MW	12-7750
R16	4.7 kohm, 333MW	12-7755
R17-R19	10 kohm, 333MW	12-7748
R21	0.1 ohm, 3W	12-7647
R22	80.6 kohm, 333MW	12-7762
R23	1 Mohm, 333MW	12-7763
R24	10 Mohm, 333MW	12-7749
R25	10 kohm, 333MW	12-7748
R26	80.6 kohm, 333MW	12-7762
R27	62 kohm, 333MW	12-7790
R28	1 Mohm, 333MW	12-7763
R29	33.2 kohm, 333MW	12-7793
R30	47 kohm, 333MW	12-7758
R31	100 ohm, 333MW	12-7746
R32	221 kohm, 333MW	12-7792
R33-R36	10 kohm, 333MW	12-7748
R37	820 ohm, 333MW	12-7791
R38	10 kohm, 333MW	12-7764

4. PARTS LIST, COMPONENT LAYOUTS, AND SCHEMATICS

Ref. No.	Description	Part No.
RESISTORS		
R39-R40	1 Mohm	10-7028
R41	100 kohm, 333MW	12-7747
R42	3 kohm, 333MW	12-7768
R43	470 kohm, 333MW	12-7757
R44	1 Gohm	12-7686
R45	100 kohm, 333MW	12-7747
R46	10 kohm, 333MW	12-7748
R47	33.2 kohm, 333MW	12-7793
R48	1 Mohm, 333MW	12-7763
R49	12 kohm, 333MW	12-7787
R50	1 kohm, pot	09-6831
R51	330 ohm, 333MW	12-7788
R52	1 Mohm, pot	09-6828
R53	22 kohm, 333MW	12-7754
R54	10 kohm, 333MW	12-7748
R55	1 kohm, 333MW	12-7750
R56	1 Mohm, 333MW	12-7763
R57	80.6 kohm, 333MW	12-7762
R58	1 Mohm, 333MW	12-7751
R59	10 kohm, 333MW	12-7748
RESISTOR NETWORK		
RN1	5.6 kohm	12-7696
RN20	220 kohm	12-7578
TRANSFORMERS		
T1	M2350-1 HVPS	4275-037
T2	M2350-1 LVPS	4275-089
INTEGRATED CIRCUITS		
U1	LT1079	06-6252
U2	LT1078	06-6251
U3	CA3096	06-6023
U4	TLC372	06-6265
U5	LT1078	06-6251
U6-U7	AD7549	06-6253
U8	LM2578	06-6223
U9	CD4098	06-6066
U10	LT1078	06-6251
U11	LM385Z	05-5791

4. PARTS LIST, COMPONENT LAYOUTS, AND SCHEMATICS

CENTRAL PROCESSOR BOARD

Ref. No.	Description	Part No.
CAPACITORS		
C95	0.047 μF	04-5565
C96	0.001 μF	14-5519
C97	47 pF	04-5533
C98	0.01 μF	04-5523
C99-C100	0.1 μF	04-5521
C101	27 pF	04-5614
C102-C103	22 pF	04-5552
C104	27 pF	04-5614
C109	10 μF	04-5592
C110	100 μF	04-5576
C111	1 μF	04-5575
C129	0.1 F	04-5633
C172	10 μF	04-5592
C177	0.1 μF 100V	04-5521
DIODES		
CR112	1N5231	07-6261
CR113-CR115	1N4148	07-6272
CR162	1N4148	07-6272
HEADER		
HD175	3 PIN SIP	n/a
TRANSISTORS		
Q153	2N3904	05-5755
Q154	MPS6534	05-5763
Q155	2N3904	05-5755
Q168,Q174	2N7000	05-5820
RESISTORS		
R130	10 kohm, pot	09-6822
R131	100 kohm, pot	09-6823
R132	2.2 kohm	10-7012
R133	470 kohm	10-7026
R134	220 kohm	10-7066
R135	5.6 kohm	10-7042
R137-R138	10 kohm	10-7016
R139	33 kohm	10-7019
R140	10 kohm	12-7540
R141-R142	100 kohm	12-7557
R143	7.15 kohm	12-7620

4. PARTS LIST, COMPONENT LAYOUTS, AND SCHEMATICS

Ref. No.	Description	Part No.
RESISTORS		
R144	1 Mohm	10-7028
R148	35.7 kohm	12-7640
R149	8.66 kohm	12-7623
R160	220 kohm	10-7066
R161	150 kohm	10-7024
R164	1 Mohm	10-7028
R166-R167	10 kohm	12-7540
R170	1 Mohm	10-7028
R176	220 kohm	10-7066
RESISTOR NETWORKS		
RN151	22 kohm	12-7566
TRANSFORMERS		
T157	M2221, 300-9	4275-074
INTEGRATED CIRCUITS		
U118	ICM7556	06-6244
U119	MM58274	06-6254
U120	CPL-200-T2-T	06-6441
U121	CD74HC573	06-6093
U122	27C512	06-6264
U123	CPL-140-T2-T	06-6439
U124	80C51FA	06-6236
U125	LM331	06-6156
U126	TLC27M71P	06-6248
U128	RDD104	06-6060
CRYSTALS		
Y158	32 kHz XTAL	01-5219
Y159	6.144 MHz XTAL	01-5212

4. PARTS LIST, COMPONENT LAYOUTS, AND SCHEMATICS

64k MEMORY EXPANDER BOARD

Ref. No.	Description	Part No.
RESISTORS		
R001	22.1 kohm	12-7843
R114	221 kohm	12-7845
INTEGRATED CIRCUITS		
U115	MAX703ESA	06-6381
U116	CD74HC4066M	06-6323
U117	CD74HC138M	06-6339
U119	CXK581000M	06-6385

4. PARTS LIST, COMPONENT LAYOUTS, AND SCHEMATICS

I/O INTERFACE BOARD

Ref. No.	Description	Part No.
CAPACITORS		
C3-C4	27 pF	04-5614
C5	0.047 µF	04-5565
C6	100 µF	04-5576
C8-C11	10 µF	04-5592
C12	4.7 µF	04-5578
C37-C39	220 µF	04-5639
RESISTORS		
R16	33 ohm	10-7001
R19	8.2 kohm	10-7015
R20-R21	3.3 kohm	10-7013
R30	10 ohm	10-7046
R40	4.7 ohm	10-7095
RESISTOR NETWORKS		
RN33	10 kohm	12-7777
DIODES		
CR26-CR28	1N5231	07-6261
TRANSISTORS		
Q23	2N3904	05-5755
TRANSFORMERS		
T1	M2350-1 EL	4275-090
INTEGRATED CIRCUITS		
U13	MAX232	06-6188
U36	87C51FA	06-6405
CRYSTALS		
Y25	6.144 MHz MICRO XTAL	01-5212

4. PARTS LIST, COMPONENT LAYOUTS, AND SCHEMATICS

BACKPLANE BOARD

Ref. No.	Description	Part No.
RESISTORS		
R6	1 kohm	10-7009
DIODES		
CR5	1N4148	07-6272
CR7	1N5819	07-6306
CONNECTORS		
J1-J2	125X44-CBNEARS EZA22DRSN	13-8181

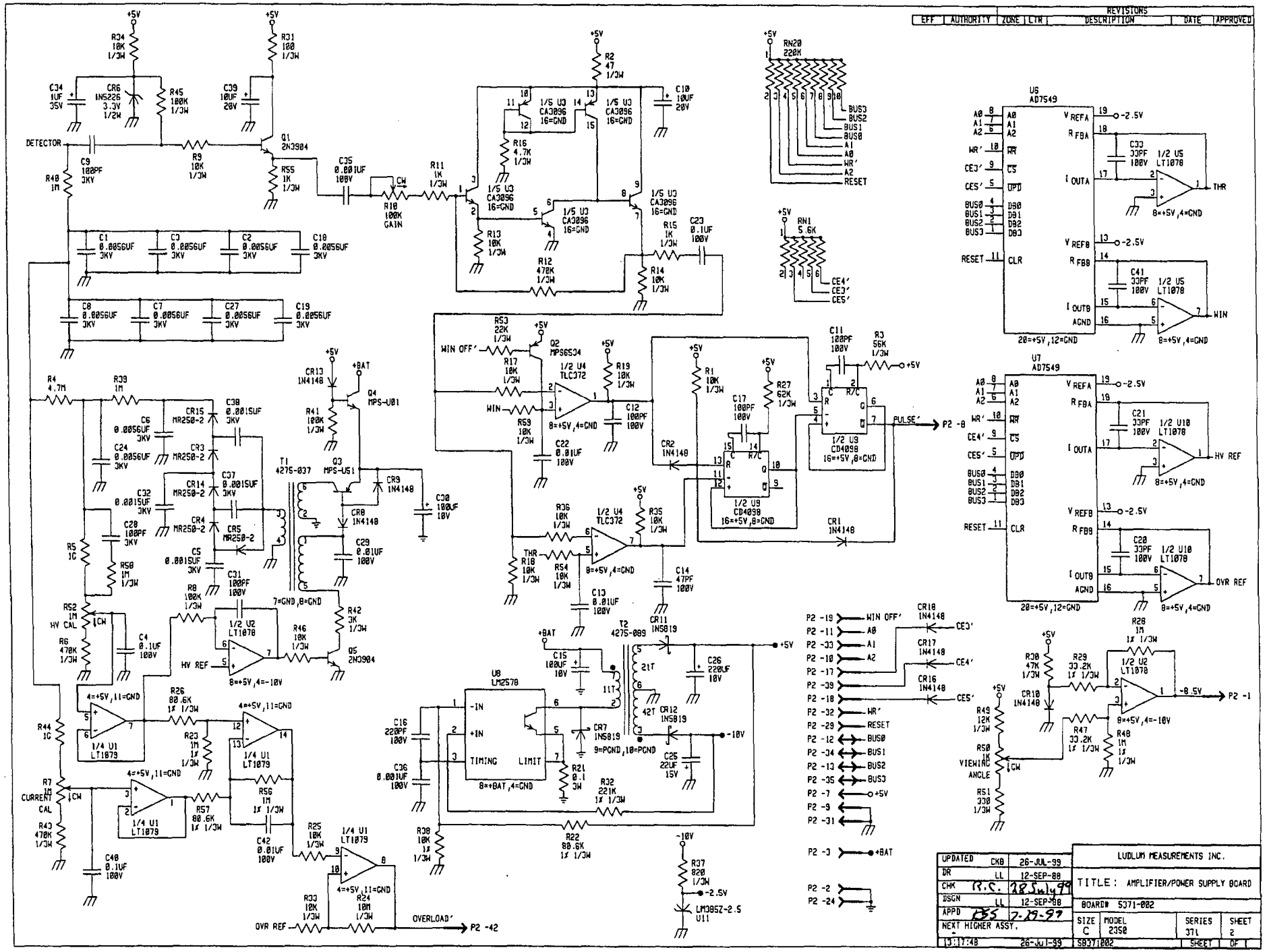
REVISIONS
EFF | AUTHORITY | ZONE | LTR | DESCRIPTION | DATE | APPROVED
DETECTOR
Q1 2N3904
U5 AD7549
U7 AD7549
U8 LM2578
T1 4275-037
T2 4275-089
Q2 MPS6534
Q3 MPS-U51
Q4 MPS-U01
Q5 2N3904
1/2 U2 LT1078
1/4 U1 LT1079
1/2 U4 TLC372
1/2 U9 CD4098
1/2 U5 LT1078
1/2 U10 LT1078
1/5 U3 CA3096
RN20 220K
RN1 5.6K
LM385Z-2.5 U11
WIN OFF'
PULSE'
THR
WIN
HV REF
OVR REF
OVERLOAD'
HV CAL
CURRENT CAL
VIEWING ANGLE
P2 -8
P2 -1
P2 -42
P2 -19
P2 -11
P2 -33
P2 -10
P2 -17
P2 -39
P2 -18
P2 -32
P2 -29
P2 -12
P2 -34
P2 -13
P2 -35
P2 -7
P2 -9
P2 -31
P2 -3
P2 -2
P2 -24
UPDATED CKB 26-JUL-99
DR LL 12-SEP-88
CHK R.C. 28 Jul 99
DSGN LL 12-SEP-88
APPD DSS 7-29-99
NEXT HIGHER ASSY.
13:17:48 26-JUL-99
LUDLUM MEASUREMENTS INC.
TITLE: AMPLIFIER/POWER SUPPLY BOARD
BOARD# 5371-002
SIZE C | MODEL 2350 | SERIES 371 | SHEET 2
5371002 | SHEET | OF

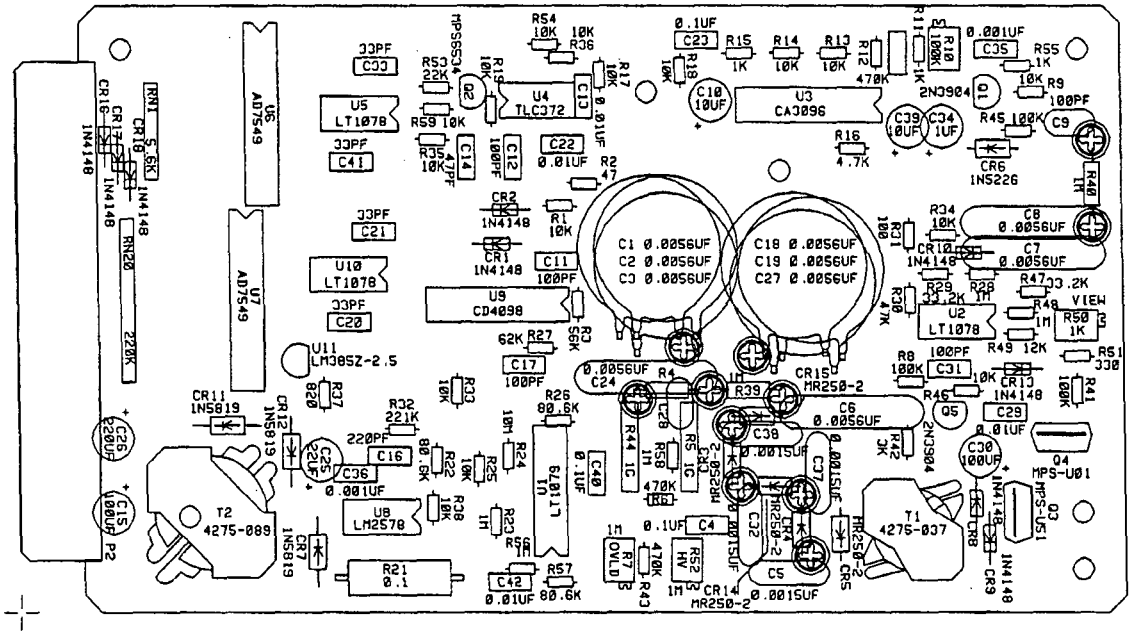

LUDLUM MEASUREMENTS INC. SWEETWATER, TX.					
DR	CKB 26-JUL-99	TITLE: AMPLIFIER/POWER SUPPLY BOARD			
CHK R.C.	28/7/99	BOARD# 5371-002			85371002
DSGN LL	11-OCT-88	MODEL 2350	SERIES 371	SHEET 24	
APP RSS	7/28/99				
13:11:40	26-JUL-99	COMP SIDE ☐	SLDR SIDE ☐	OUTLINE ☒	
COMP PASTE ☐	COMP MASK ☐	SLDR PASTE ☐	SLDR MASK ☐		

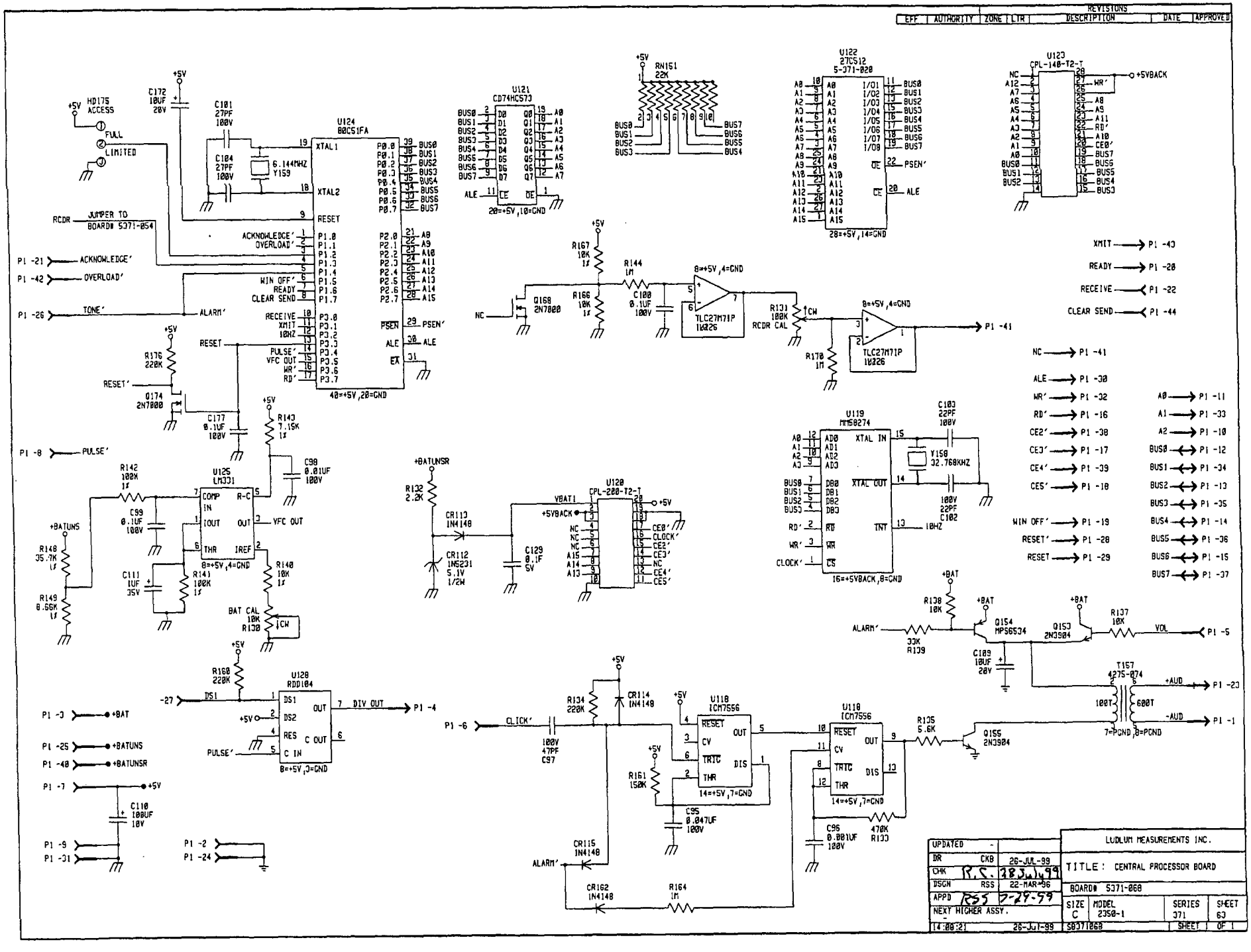
REVISIONS
EFF | AUTHORITY | ZONE | LTR | DESCRIPTION | DATE | APPROVED
HD175 ACCESS
FULL
LIMITED
JUMPER TO BOARD# 5371-054
RCDR
U124 80C51FA
XTAL1
XTAL2
RESET
ACKNOWLEDGE'
OVERLOAD'
WIN OFF'
READY
CLEAR SEND
RECEIVE
XMIT
10HZ
PULSE'
VFC OUT
WR'
RD'
PSEN'
ALE
EA
40=+5V,20=GND
6.144MHZ Y159
U121 CD74HC573
20=+5V,10=GND
RN151 22K
U122 27C512 5-371-020
28=+5V,14=GND
U123 CPL-140-T2-T
+5VBACK
U125 LM331
COMP IN
IOUT
THR
R-C
OUT
IREF
8=+5V,4=GND
U120 CPL-200-T2-T
VBAT1
+5VBACK
CE0'
CLOCK'
CE2'
CE3'
CE4'
CE5'
U119 MM58274
XTAL IN
XTAL OUT
INT
16=+5VBACK,8=GND
Y158 32.768KHZ
U128 RDD104
DS1
DS2
RES
C IN
C OUT
8=+5V,0=GND
DIV OUT
U118 ICM7556
RESET
CV
TRIG
THR
OUT
DIS
14=+5V,7=GND
TLC27M71P 10226
Q168 2N7000
Q174 2N7000
Q154 MPS6534
Q153 2N3904
Q155 2N3904
T157 4275-074
100T
600T
7=PGND,8=PGND
+AUD
-AUD
XMIT → P1 -40
READY → P1 -20
RECEIVE ← P1 -22
CLEAR SEND ← P1 -44
NC → P1 -41
ALE → P1 -30
WR' → P1 -32
RD' → P1 -16
CE2' → P1 -38
CE3' → P1 -17
CE4' → P1 -39
CE5' → P1 -18
WIN OFF' → P1 -19
RESET' → P1 -28
RESET → P1 -29
A0 → P1 -11
A1 → P1 -33
A2 → P1 -10
BUS0 ↔ P1 -12
BUS1 ↔ P1 -34
BUS2 ↔ P1 -13
BUS3 ↔ P1 -35
BUS4 ↔ P1 -14
BUS5 ↔ P1 -36
BUS6 ↔ P1 -15
BUS7 ↔ P1 -37
P1 -21 ACKNOWLEDGE'
P1 -42 OVERLOAD'
P1 -26 TONE'
P1 -8 PULSE'
P1 -41
P1 -5 VOL
P1 -23 +AUD
P1 -1 -AUD
P1 -4 DIV OUT
P1 -6 CLICK'
P1 -3 +BAT
P1 -25 +BATUNS
P1 -40 +BATUNSR
P1 -7 +5V
P1 -9
P1 -31
P1 -2
P1 -24
UPDATED
DR CKB 26-JUL-99
CHK R.S. 28JUL99
DSGN RSS 22-MAR-96
APPD RSS 7-29-99
NEXT HIGHER ASSY.
14:00:21 26-JUL-99
LUDLUM MEASUREMENTS INC.
TITLE: CENTRAL PROCESSOR BOARD
BOARD# 5371-068
SIZE C
MODEL 2350-1
SERIES 371
SHEET 63
S0371068
SHEET 1 OF 1

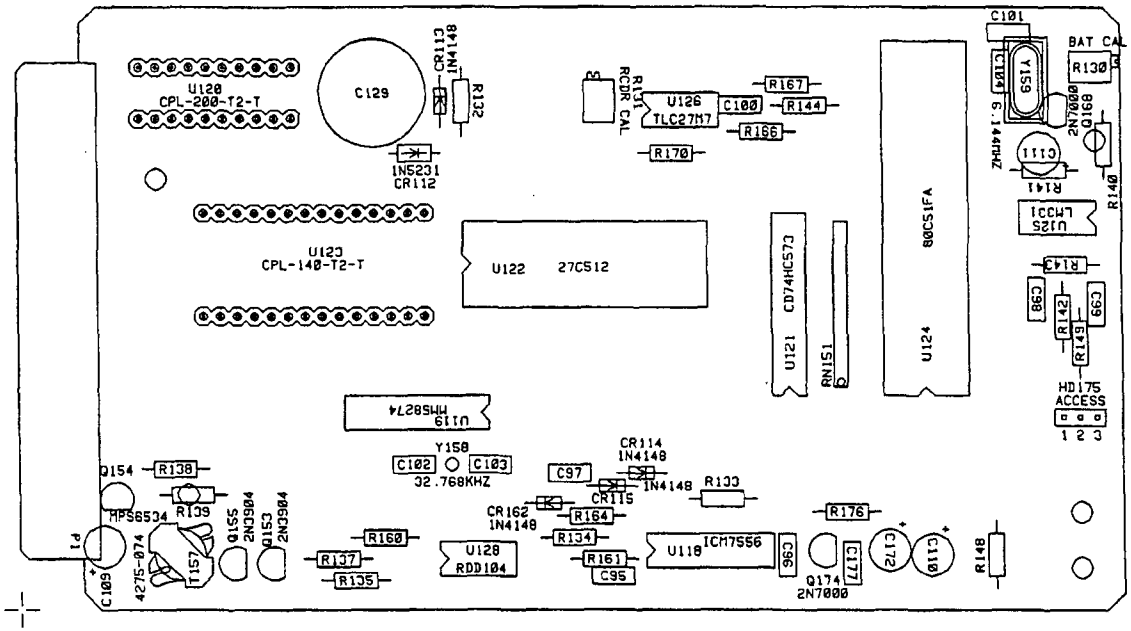

LUDLUM MEASUREMENTS INC. SWEETWATER, TX.			
DR CKB	09/17/96	TITLE: CENTRAL PROCESSOR BOARD	
CHK P.C. July 28 99		BOARD: 5371-068	
DSGN RSS	09/17/96	MODEL: 2350-1	
APP RSS	7-29-99	FILENAME: BS371068	
COMPONENT	SOLDER	16:31:18	28-JUL-99
		REVISION	SERIES / SHEET
OUTLINE	OUTLINE	1.0	371 / 64

REVISIONS						
EFF	AUTHORITY	ZONE	LTR	DESCRIPTION	DATE	APPROVED

P1 -1 ← NC	P1 -28 ← NC
P1 -2 ← A12	P1 -27 ← WR
P1 -3 ← A7	P1 -26 ← NC
P1 -4 ← A6	P1 -25 ← A8
P1 -5 ← A5	P1 -24 ← A9
P1 -6 ← A4	P1 -23 ← A11
P1 -7 ← A3	P1 -22 ← RD'
P1 -8 ← A2	P1 -21 ← A10
P1 -9 ← A1	P1 -20 ← NC
P1 -10 ← A0	P1 -19 ← BUS7
P1 -11 ← BUS0	P1 -18 ← BUS6
P1 -12 ← BUS1	P1 -17 ← BUS5
P1 -13 ← BUS2	P1 -16 ← BUS4
P1 -14 ← NC	P1 -15 ← BUS3

P2 -1 ← VBAT1	P2 -20 ← +5V
P2 -2 ← +5VBACK	P2 -19 ← NC
P2 -3 ← NC	P2 -18 ← NC
P2 -4 ← NC	P2 -17 ← CE0'
P2 -5 ← NC	P2 -16 ← CLOCK'
P2 -6 ← NC	P2 -15 ← CE2'
P2 -7 ← A15	P2 -14 ← CE3'
P2 -8 ← A14	P2 -13 ← NC
P2 -9 ← A13	P2 -12 ← CE4'
P2 -10 ← GND	P2 -11 ← CE5'

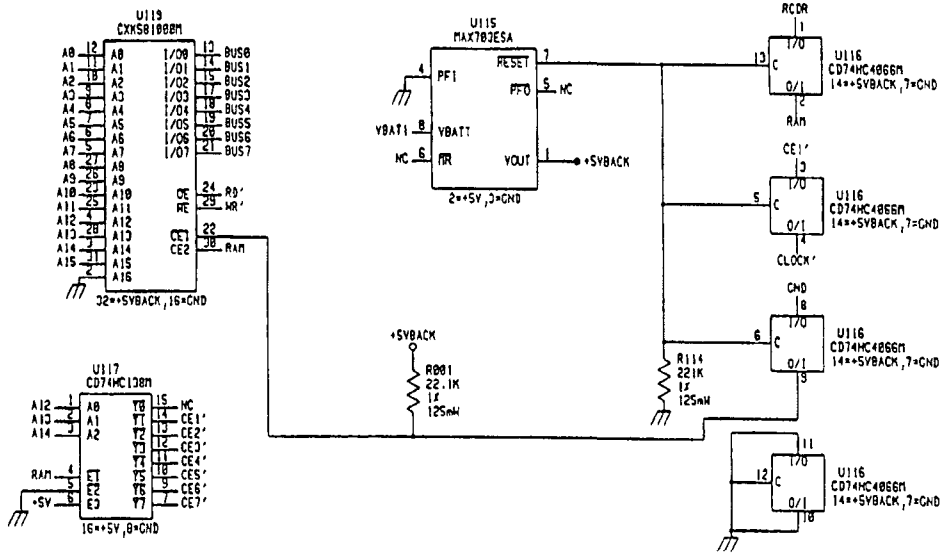

UPDATED -	/ /	LUDLUM MEASUREMENTS INC	
DR CKB	08/14/95	TITLE: 64K MEMORY EXPANDER BOARD	
CHK R.C.	3/4/96		
DSGN LL	05/12/95	BOARD# 5371-054	
APPD JGW	3/4/96	SIZE D / MODEL 2350-1	SERIES 371 / SHEET 50
NEXT HIGHER ASSY. -			
14:06:58	26-Feb-96	5D371054	SHEET 1 OF 1

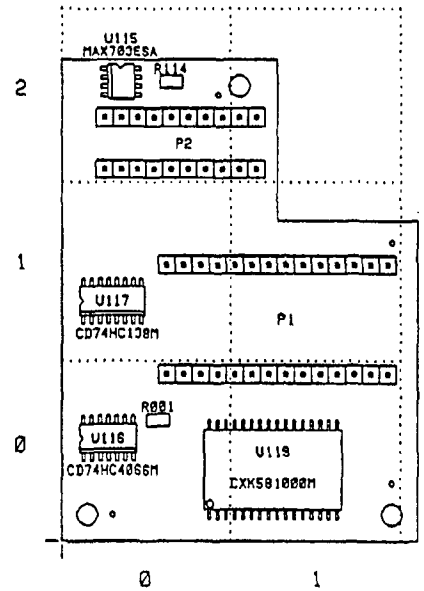

LUDLUM MEASUREMENTS INC. SWEETWATER, TX.					
DR CKB	08/14/95	TITLE: 128K MEMORY EXPANDER BRD			
CHK R.C.	3/4/96	BOARD# 5371-054		BS371054	
DSGN LL	05/12/95	MODEL 2350-1	SERIES 371	SHEET 51	
APP JGW	3/4/96	COMP ARTWORK ☐		SLDR ARTWORK ☐	
08:38:42	21-Feb-96	COMP OUTLINE ☒		SLDR OUTLINE ☐	
COMP PASTE ☐	COMP MASK ☐	SLDR PASTE ☐		SLDR MASK ☐	

REVISIONS						
ECP	AUTHORITY	ZONE	LTR	DESCRIPTION	DATE	APPROVED

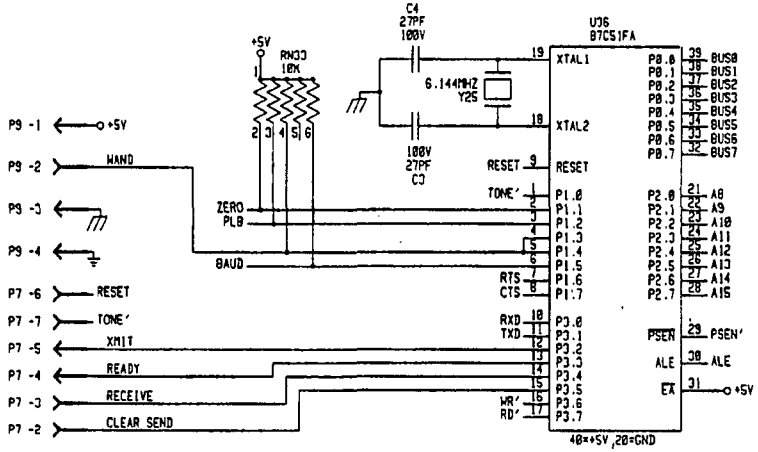

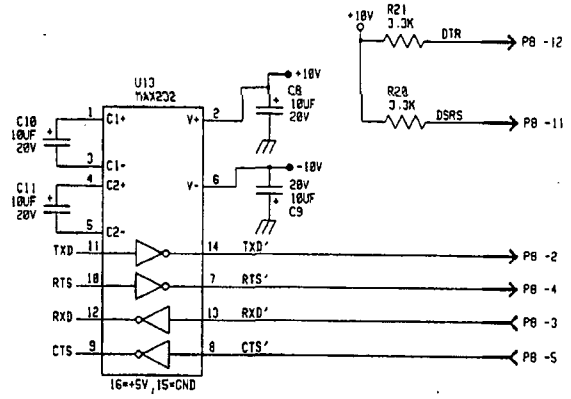

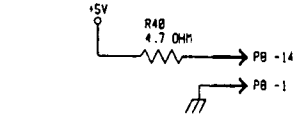

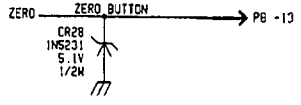

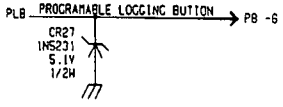

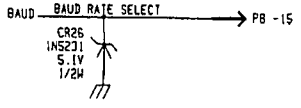

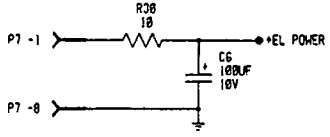

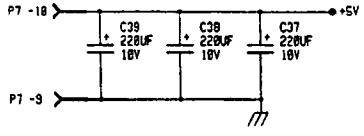

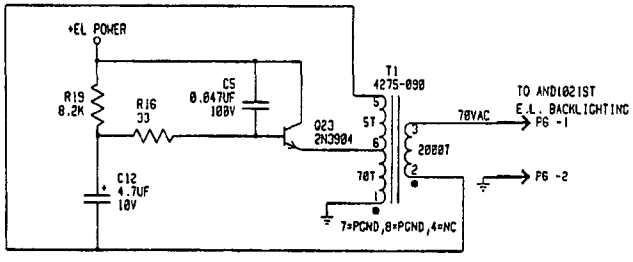

UPDATED -	/ /	LUDLUM MEASUREMENTS INC.	
DR CKB	11/20/95	TITLE: I/O INTERFACE	
CHK R.C.	3/4/96		
DSGN RSS	11/20/95	BOARD# 5371-063	
APPD JGW	3/4/96		
NEXT HIGHER ASSY. -		SIZE D / MODEL 2350-1	SERIES 371 / SHEET 08
16:29:49	29-Feb-96	5BJ71063	SHEET 1 OF 1

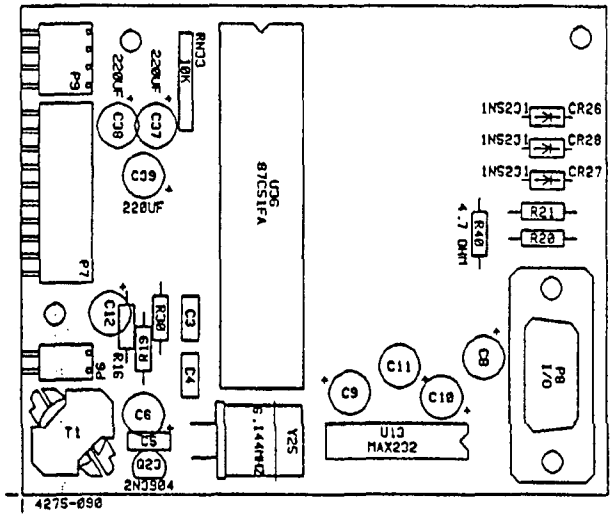

LUDLUM MEASUREMENTS INC. SWEETWATER, TX.				
DR CKB	11/20/95	TITLE: I/O INTERFACE BOARD		
CHK R.C.	3/4/96	BOARD# 5371-063	85371063	
DSGN RSS	11/20/95	MODEL 2350-1	SERIES 371	SHEET 59
APP JGW	3/4/96	COMP ARTWORK ☐	SLDR ARTWORK ☐	
16:38:15	29-Feb-96	COMP OUTLINE ☒	SLDR OUTLINE ☐	
COMP PASTE ☐	COMP MASK ☐	SLDR PASTE ☐	SLDR MASK ☐	

REVISIONS						
EFF	AUTHORITY	ZONE	LTR	DESCRIPTION	DATE	APPROVED

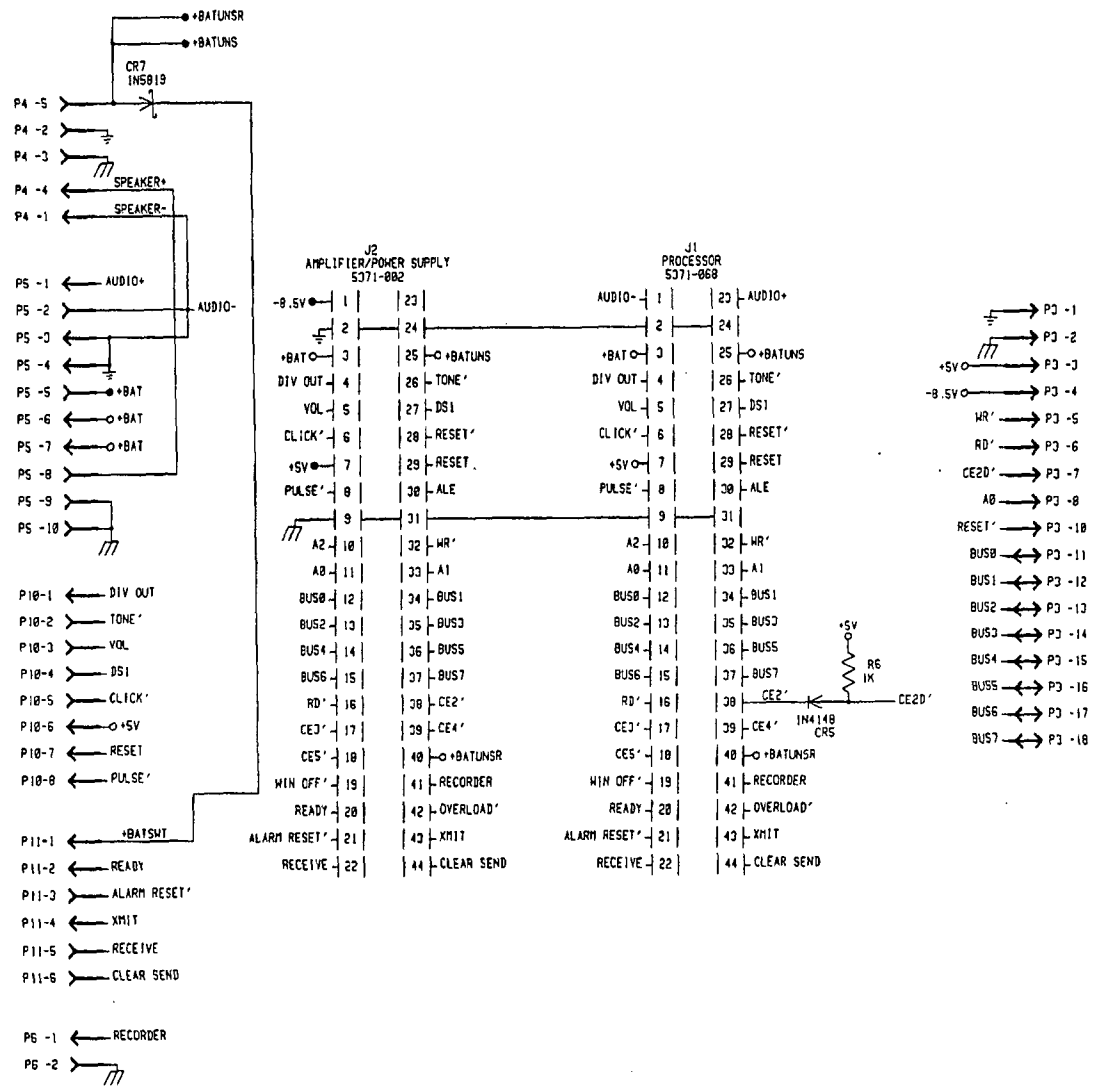

UPDATED -	/ /	
DR LL	9/27/88	LUDLUM MEASUREMENTS INC.
CHK	9/27/88	TITLE: BACKPLANE
DSGN LL	9/27/88	BOARD# 5371-003
APPD JGW	9/27/88	SIZE D · MODEL 2350-1 · SERIES 371 · SHEET 3
NEXT HIGHER ASSY. -		
08:55:18	17-Sep-96	5037100J · SHEET 1 OF 1

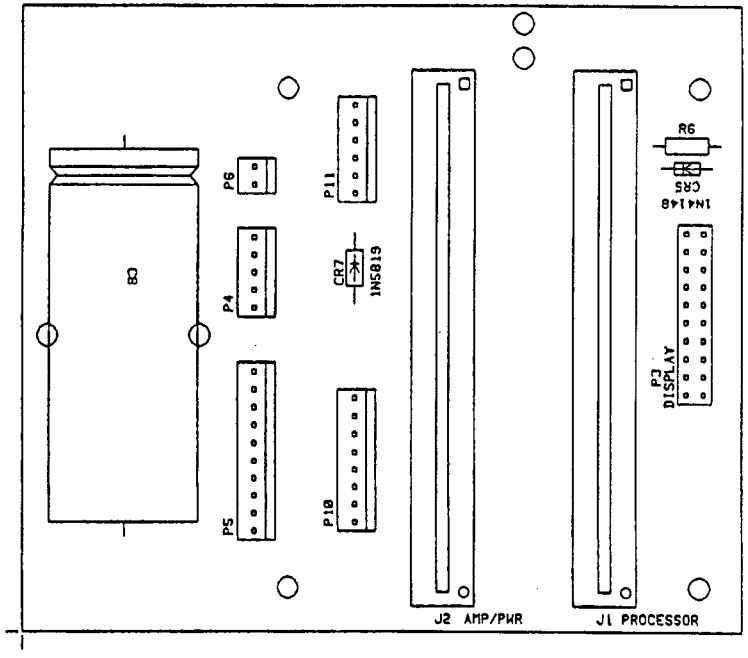

LUDLUM MEASUREMENTS INC. SWEETWATER, TX.					
DR LL	12/17/90	TITLE: BACKPLANE			
CHK R.C.	3/4/96	BOARD# 5371-003	05371003		
DSGN LL	10/20/88	MODEL 2350	SERIES 371	SHEET 29	
APP JGW	3/4/96	COMP ARTWORK ☐	SLDR ARTWORK ☐		
08:55:02 21-Feb-96		COMP OUTLINE ☒	SLDR OUTLINE ☐		
COMP PASTE ☐	COMP MASK ☐	SLDR PASTE ☐	SLDR MASK ☐		

REVISIONS						
EFF	AUTHORITY	ZONE	LTR	DESCRIPTION	DATE	APPROVED

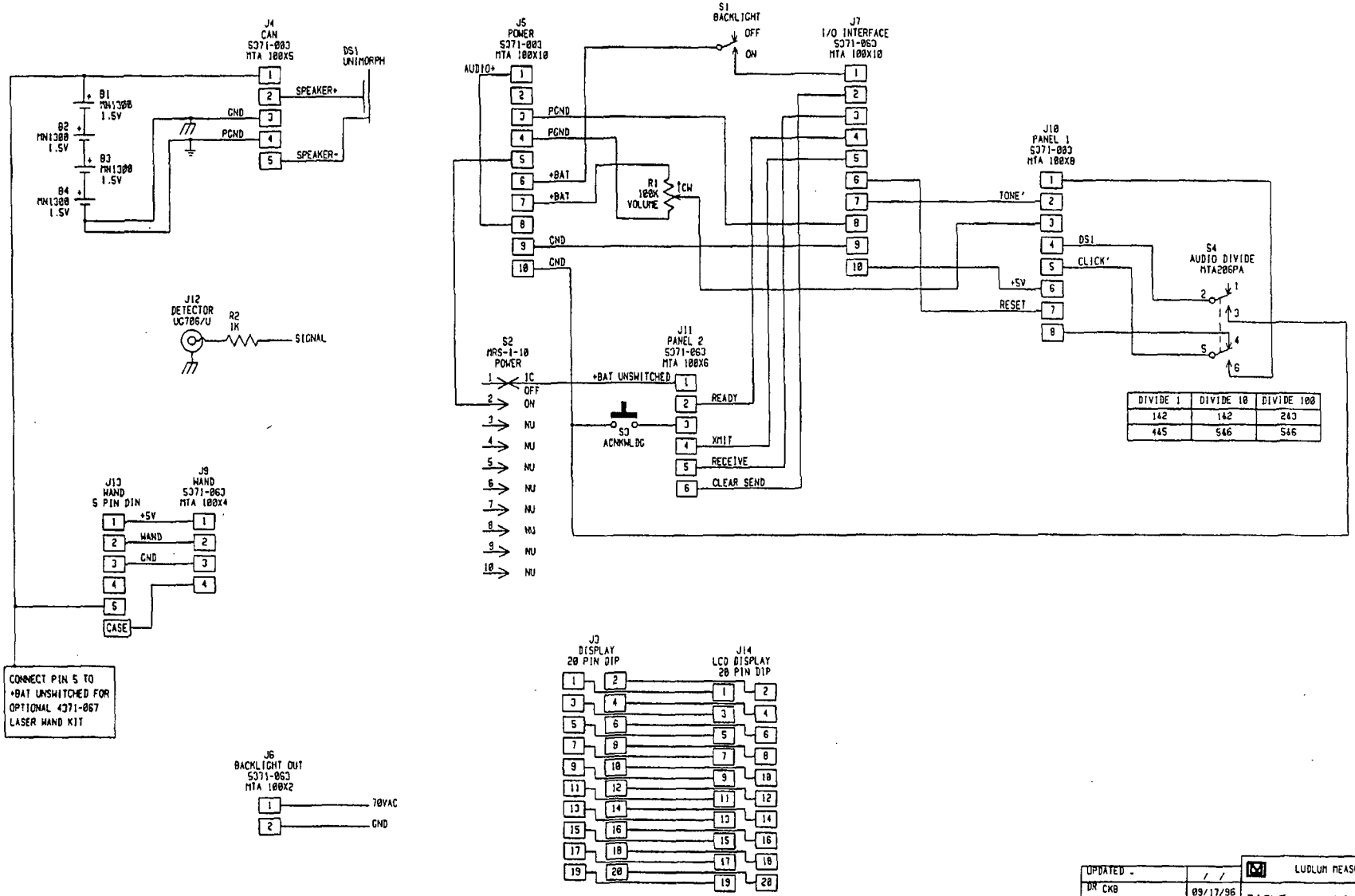

DIVIDE 1	DIVIDE 10	DIVIDE 100
142	142	243
445	546	546

UPDATED -	/ /	LUDLUM MEASUREMENTS INC.
DR CKB	09/17/96	TITLE: WIRING DIAGRAM
CHK	9.17.96	
DSCN RSS	09/17/96	BOARD# 371-071
APPD	9 17 96	
NEXT HIGHER ASSY.		SIZE D · MODEL 2350-1 · SERIES 371 · SHEET 72
08:53:18	17-Sep-96	W371071 · SHEET 1 OF 1

LUDLUM MODEL 3
SURVEY METER

June 2007

Serial Number 239543 and Succeeding

Serial Numbers

LUDLUM MODEL 3
SURVEY METER

June 2007

Serial Number 239543 and Succeeding

Serial Numbers

LUDLUM MEASUREMENTS, INC.
501 OAK STREET, P.O. BOX 810
SWEETWATER, TEXAS 79556
325-235-5494, FAX: 325-235-4672

REV #	ALTERATIONS	DATE	BY
1	VALID	12/21/05	DDW
2	REDESIGNED BATTERY LID ARTWORK	8/11/06	CMC

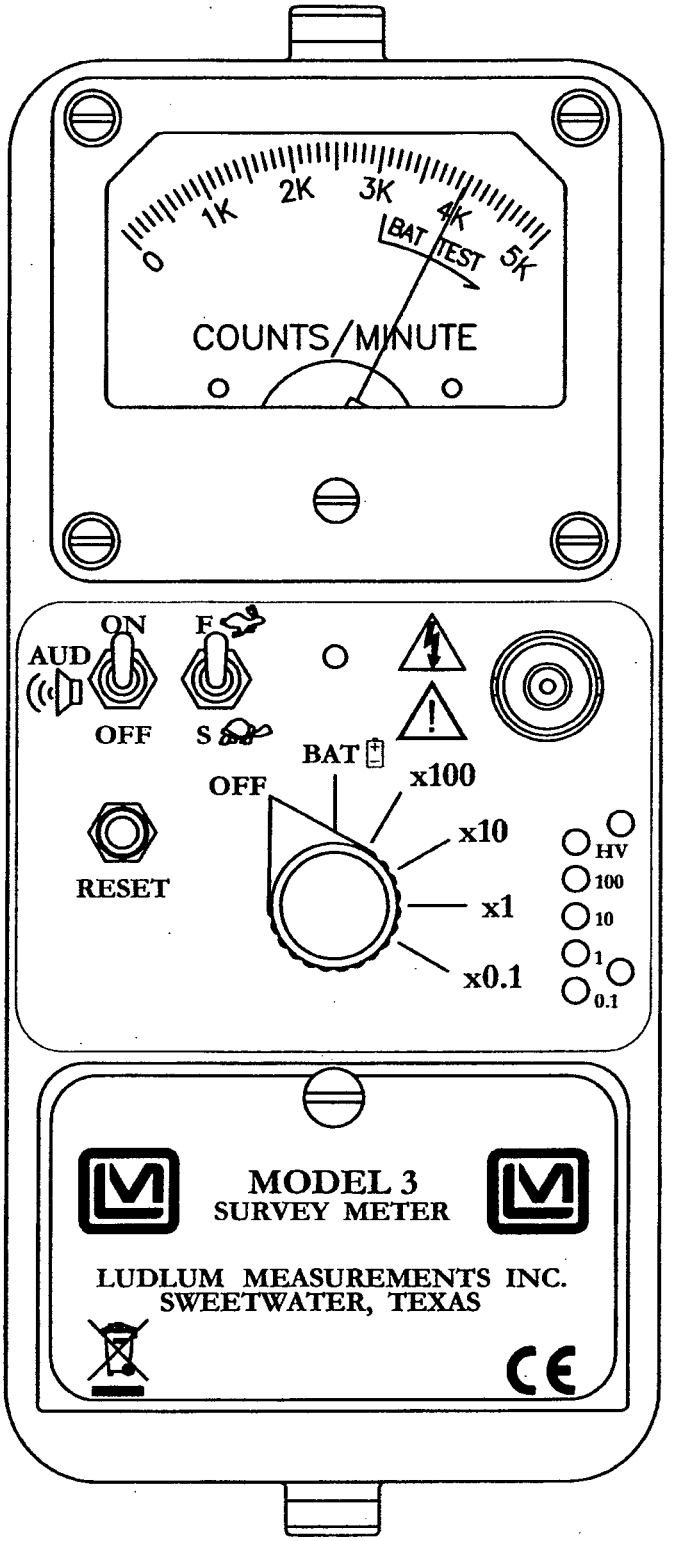

DWN	DATE	CHK	DATE	APP	DATE
CMC	8-11-06			NGW	8-14-06

DWG NUM: 4464-041 SCALE: FULL ☒ OTHER

TITLE M 3 FRONT PANEL

LUDLUM MEASUREMENTS, INC.
501 OAK STREET
SWEETWATER, TEXAS 79556

SERIES 464 SHEET 41A

Table of Contents

Introduction **1**

Getting Started **2**

Unpacking and Repacking **2-1**

Battery Installation **2-1**

Connecting a Detector to the Instrument **2-2**

Battery Test **2-2**

Instrument Test **2-2**

Reading the Meter Face Dial **2-3**

Operational Check **2-6**

Specifications **3**

Identification of Controls and Functions **4**

Safety Considerations **5**

Environmental Conditions for Normal Use **5-1**

Warning Markings and Symbols **5-1**

Cleaning and Maintenance Precautions **5-2**

Calibration and Maintenance **6**

Calibration **6-1**

Exposure Rate Calibration **6-1**

CPM Calibration **6-2**

Establishing an Operating Point **6-3**

Maintenance **6-4**

Recalibration **6-4**

Batteries **6-5**

Troubleshooting **7**

Troubleshooting Electronics which utilize a G-M Detector or Scintillator **7-1**

Troubleshooting G-M Detectors **7-3**

Troubleshooting Scintillators **7-4**

Technical Theory of Operation ***8***

Low Voltage Supply **8-1**

High Voltage Supply **8-1**

Detector Input **8-1**

Amplifier **8-1**

Discriminator **8-2**

Audio **8-2**

Scale Ranging **8-2**

Meter Drive **8-2**

Meter Reset **8-2**

Fast/Slow Time Constant **8-2**

Recycling ***9***

Parts List ***10***

Model 3 Survey Meter **10-1**

Main Board, Drawing 464 × 204 **10-1**

Wiring Diagram, Drawing 464 × 212 **10-3**

Drawings and Diagrams ***11***

Section 1

Introduction

The Model 3 is a portable radiation survey instrument with four linear ranges used with exposure rate or cpm (counts per minute) meter dials or a combination of both, exposure rate and count rate (referred to as "combo") meter face dials. The instrument features a regulated high-voltage power supply, unimorph speaker with audio ON-OFF capability, fast-slow meter response, meter reset button and a six-position switch for selecting battery check or scale multiples of ×0.1, ×1, ×10 and ×100. Each range multiplier has its own calibration potentiometer. The unit body and meter housing are made of cast aluminum and the can is 0.090" thick aluminum.

The audio provides a brief "click" for every radiation event detected. It also provides a steady tone to warn the user of a low battery condition. This low battery warning overrides the position of the AUD ON-OFF switch.

Any Geiger-Mueller (G-M) detector offered by Ludlum Measurements will operate with this unit as well as any scintillation type detector. The instrument is typically set at 900 volts for G-M tube operation. For special requirements of G-M or scintillation detectors, the instrument high voltage may be adjusted from 200 to 1500 volts.

The unit is operated with two "D" cell batteries for operation from –4°F (–20°C) to 122°F (50°C). For instrument operation below 32°F (0°C) either very fresh alkaline or rechargeable NiCd batteries should be used.

Section 2

Getting Started

Unpacking and Repacking

Remove the calibration certificate and place it in a secure location. Remove the instrument and accessories (batteries, cable, etc.) and ensure that all of the items listed on the packing list are in the carton. Check individual item serial numbers and ensure calibration certificates match. The Model 3 serial number is located on the front panel below the battery compartment. Most Ludlum Measurements, Inc. detectors have a label on the base or body of the detector for model and serial number identification.

Important!

If multiple shipments are received, ensure that the detectors and instruments are not interchanged. Each instrument is calibrated to specific detector(s), and therefore not interchangeable.

To return an instrument for repair or calibration, provide sufficient packing material to prevent damage during shipment. Also provide appropriate warning labels to ensure careful handling. Include detector(s) and related cable(s) for calibration. Include brief information as to the reason for return, as well as return shipping instructions:

- **Return shipping address**
- **Customer name or contact**
- **Telephone number**
- **Description of service requested and all other necessary information**

Battery Installation

Ensure the Model 3 range selector switch is in the OFF position. Open the battery lid by pushing down and turning the quarter-turn thumbscrew

counterclockwise ¼ turn. Install two "D" size batteries in the compartment.

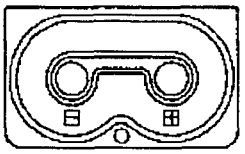

Note the (+) and (-) marks inside the battery door. Match the battery polarity to these marks. Close the battery box lid, push down and turn the quarter-turn thumb screw clockwise ¼ turn.

Note:

The center post of a "D" size battery is positive.

Connecting a Detector to the Instrument

Caution!

The detector operating voltage (HV) is supplied to the detector via the detector input connector. A mild electric shock may occur if you make contact with the center pin of the input connector. Switch the Model 3 range selector switch to the OFF position before connecting or disconnecting the cable or detector.

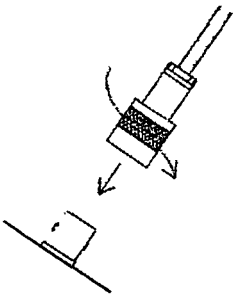

Connect one end of a detector cable to the detector by firmly pushing the connectors together while twisting clockwise ¼ turn. Repeat the process in the same manner with the other end of the cable and the instrument.

Battery Test

Check the batteries daily or prior to use, whichever is less frequent, to assure proper operation of the instrument. Move the range multiplier switch to the BAT position. Ensure that the meter needle deflects to the battery check portion on the meter scale. If the meter does not respond, check to see if the batteries have been correctly installed. Replace the batteries if necessary.

Instrument Test

After checking the batteries, turn the instrument range switch to the X100 position. Place the AUD ON-OFF switch in the ON position. Expose the detector to a check source. The instrument speaker should emit "clicks" relative to the rate of counts detected. The "AUD ON/OFF" switch will silence the audible clicks if in the OFF position. It is recommended that the

"AUD ON/OFF" switch be kept in the OFF position when not needed in order to preserve battery life.

The detector cable can be a source of problems. Test the detector cable by bending or flexing either end of the cable and checking for an increase of counts detected. Replace the cable if increases in the rate of counts are detected.

Check the meter reset function by depressing the "RES" pushbutton switch and ensuring the meter needle drops to "0".

Once this procedure has been completed, the instrument is ready for use.

Reading the Meter Face Dial

Reading the meter face is very important for consistent measurements. There are, in general, three types of meter faces: 1) count rate (typically cpm – counts per minute) 2) exposure rate (typically mR/hr) and 3) "combo" (typically cpm and mR/hr.) The following examples are intended to help the user interpret the correct reading.

The normal procedure is to turn the range selector switch to the highest range and if no readings are seen on the meter, turn the selector switch down to the lower scales until a reading is seen. The ranges on the instrument selector switch are multipliers for the meter reading. A typical single scale (one arc) meter face with a cpm (counts per minute) dial is shown below.

The count rate scale reads 0-5K COUNTS/MINUTE (kcpm or 1000's of counts per minute) and has BAT TEST on the dial.

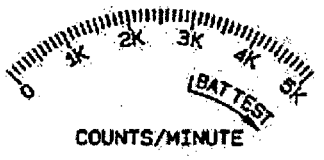

If the needle is pointing as indicated below and the instrument range selection switch is on the ×0.1 scale multiple, then the reading is 3.5 kcpm (multiplied by) ×0.1 = 350cpm.

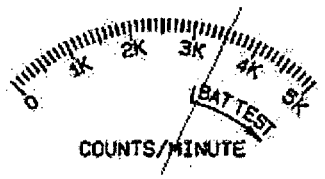

The same needle indications on successive ranges would be:

×1 = 3.5 kcpm (or 3,500 cpm)

×10 = 35 kcpm (or 35,000 cpm)

×100 = 350 kcpm (or 350,000 cpm)

A typical dual scale (two arcs) meter face is shown below. The top scale reads 0-2 mR/hr. The bottom scale also reads 0-2 mR/hr and is for ×100 only scale. The ×100 ONLY scale will work correctly when the multiplier switch is in the ×100 range. The meter face also has a BAT TEST position on the dial.

If the needle is pointing as indicated below and the range selection switch is on the ×0.1 scale, then the reading is 0.1 mR/hr.

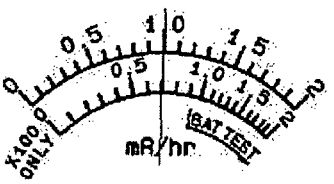

The same needle indications on successive ranges would be:

×1 = 1.0 mR/hr (or 1,000 μR/hr)

×10 = 10 mR/hr (or 10,000 μR/hr)

×100 = 70 mR/hr (or 70,000 μR/hr)

The dial shown below has three arcs: a counts per minute scale (cpm), a linear mR/hr scale, and a non-linear mR/hr scale for the ×100 range only. The meter face also has a BAT TEST position.

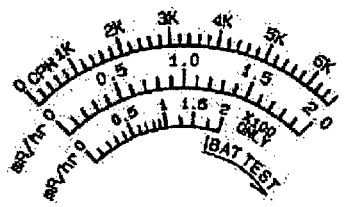

The top cpm scale is valid for the ×0.1, ×1, ×10 and the ×100 ranges. The linear (middle) mR/hr scale is valid for the ×0.1, ×1 and×10 ranges. The non-linear mR/hr scale is valid for the ×100 range only. This meter face is commonly referred to as a "combo" meter face, since it has both, count rate (cpm) and exposure rate (mR/hr) arcs. Simpler meter faces may only have a count rate or an exposure rate arc(s) like the previous meter faces shown.

A "combo" meter face is specifically designed for a particular detector. In the example above, the 1.0 mR/hr mark on the middle arc lines up with 3.3kcpm on the upper arc. The meter face in this example works with a detector that receives 3.3kcpm per mR/hr (the Ludlum Model 44-9 pancake detector.)

In the following picture, the needle is on the first tick mark past the 4kcpm mark. Therefore, if the instrument selector switch is on the ×0.1 range, the reading is 4.2kcpm (multiplied by) ×0.1 = 420cpm.

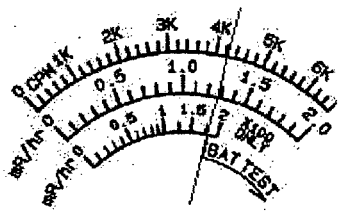

The same needle indications on successive ranges would be:

×1 = 4.2kcpm (or 4,200 cpm)

×10 = 42kcpm (or 42,000 cpm)

×100 = 420kcpm (or 420,000 cpm)

If you use the mR/hr scales, then the readings would be:

×0.1 = 0.13 mR/hr

×1 = 1.3 mR/hr

×10 = 13 mR/hr

×100 = 180 mR/hr*

Note:

*This reading is using the bottom (non-linear) scale.

Many different dials are available, but each can be used as described above.

Operational Check

To assure proper operation of the instrument and detectors(s) between calibrations, an instrument operational check including battery test and instrument test (as described on pages 2-2 and 2-3) should be performed at least daily or prior to use, whichever is less frequent. A reference reading (or readings) with a check source should be obtained with the detector(s) in a constant and reproducible manner at the time of calibration or at the time the instrument is received in the field.

If at any time the instrument fails to read within 20% of the reference reading when using the same check source, it should be sent to a calibration facility for recalibration and/or repair. If desired, multiple readings may be taken at different distances and/or with different sources so that other ranges or scales are checked.

Section 3

Specifications

Power: two "D" cell batteries housed in a sealed externally accessible compartment.

Battery Life: typically greater than 2000 hours with alkaline batteries and with the AUD ON-OFF switch in the OFF position.

End-of-Battery Life Warning: At 2.1 Vdc the meter needle will drop to the edge of the BAT TEST or BAT OK area when the meter selector switch is moved to the BAT position. At 2.0 Vdc a steady audible tone will be emitted to warn the user of the low battery condition.

High Voltage: adjustable from 400 to 1500 volts.

Threshold: fixed at 40 mV ± 10 mV.

Meter: 2.5" (6.4 cm) arc, 1 mA analog type.

Meter Dial: 0-2 mR/hr, or 0-5k cpm, BAT TEST (others available).

Multipliers: ×0.1, ×1, ×10, ×100.

Range: typically 0-200 mR/hr, or 0-500,000 counts/minute (cpm).

Linearity: reading within 10% of true value with detector connected.

Battery Dependence: less than 3% change in readings to battery failure indication.

Calibration Controls: individual potentiometers for each range; accessible from front of instrument (protective cover provided).

Audio: built-in unimorph speaker with ON-OFF switch (greater than 60 dB at 2 feet).

Response: toggle switch for fast (4 seconds) or slow (22 seconds) from 10% to 90% of final reading.

Reset: pushbutton to zero the meter.

Connector: series "C" (other available).

Size: 6.5" (16.5 cm) H × 3.5" (8.9 cm) W × 8.5" (21.6 cm) L.

Weight: 3.5 lbs. (1.6 kg) including batteries.

Construction: cast and drawn aluminum with beige powder-coat

Cable: 39-inch with "C" connector (others available).

Section 4

Identification of Controls and Functions

See the Model 3 FRONT PANEL drawing at the beginning of this manual to reference the following controls:

Meter: 2.5" (6.4cm) arc, 1 mA analog type with pivot-and-jewel suspension. Typical meter dials are 0-2 mR/hr, 0-20 μSv/h, 0-5k cpm or combination of exposure rates (0-2 mR/hr or 0-20 μSv/h) and cpm and BAT TEST.

Connector: Used to connect the detector to the instrument. Typically series "C" but can be "BNC", "MHV", "UHF", or others.

Range Selector Switch: A six-position switch marked OFF, BAT, ×100, ×10, ×1, ×0.1. Turning the range selector switch from OFF to BAT provides the operator with a battery check of the instrument. A BAT check scale on the meter provides a visual means of checking the battery-charge status. Moving the range selector switch to one of the range multiplier positions (×100, ×10, ×1, ×0.1) provides the operator with an overall range of 0 to 500,000 cpm. Multiply the scale reading by the multiplier to determine the actual scale reading.

Calibration Controls: Recessed potentiometers which are used to calibrate the individual range selections and allow for high voltage adjustment from 400 to 1500 volts. A protective cover is provided to prevent tampering.

Battery Compartment: Sealed compartment to house two "D" cell batteries.

RESET Button: When depressed, this switch provides a rapid means to drive the meter to zero.

AUD ON-OFF Switch: In the ON position, operates the unimorph speaker, located on the left side of the instrument. The frequency of the clicks is relative to the rate of the incoming pulses. The higher the rate,

the higher the audio frequency. The audio should be turned OFF when not required to reduce battery drain.

Note:

A low battery condition results in a steady audio tone regardless of the position of the AUD ON-OFF switch.

F-S Toggle Switch: Provides meter response. Selecting the fast, "F" position of the toggle switch provides 90% of full scale meter deflection in four seconds. In the slow, "S" position, 90% of full scale meter deflection takes 22 seconds. In "F" position there is fast response and large meter deviation. The "S" position should be used for slow response and damped, meter deviation.

Note:

The slow response position is normally used when the instrument is displaying low numbers that require a more stable meter movement. The fast response position is used at high rate levels.

Section 5

Safety Considerations

Environmental Conditions for Normal Use

Indoor or outdoor use

No maximum altitude

Temperature range of –20°C to 50°C (–4°F to 122°F). May be certified for operation from –40°C to 65°C (–40°F to 150°F).

Maximum relative humidity of less then 95% (non-condensing)

Pollution Degree 1 (as defined by IEC 664).

Warning Markings and Symbols

Caution!

The operator or responsible body is cautioned that the protection provided by the equipment may be impaired if the equipment is used in a manner not specified by Ludlum Measurements, Inc.

The Model 3 Survey Meter is marked with the following symbols:

CAUTION, RISK OF ELECTRIC SHOCK (per ISO 3864, No. B.3.6) – designates a terminal (connector) that allows connection to a voltage exceeding 1 kV. Contact with the subject connector while the instrument is on or shortly after turning off may result in electric shock. This symbol appears on the front panel.

CAUTION (per ISO 3864, No. B.3.1) – designates hazardous live voltage and risk of electric shock. During normal use, internal components are hazardous live. This instrument must be isolated or disconnected from the hazardous live voltage before accessing the internal components. This symbol appears on the front panel. **Note the following precautions:**

Warning!

The operator is strongly cautioned to take the following precautions to avoid contact with internal hazardous live parts that are accessible using a tool:

1. Turn the instrument power OFF and remove the batteries.
2. Allow the instrument to sit for 1 minute before accessing internal components.

The "**crossed-out wheelie bin**" symbol notifies the consumer that the product is not to be mixed with unsorted municipal waste when discarding; each material must be separated. The symbol is placed on the battery compartment lid. See section 9, "Recycling" for further information.

Cleaning and Maintenance Precautions

The Model 3 may be cleaned externally with a damp cloth, using only water as the wetting agent. Do not immerse the instrument in any liquid. Observe the following precautions when cleaning or performing maintenance on the instrument:

1. Turn the instrument OFF and remove the batteries.
2. Allow the instrument to sit for 1 minute before cleaning the exterior or accessing any internal components for maintenance.

Section 6

Calibration and Maintenance

Calibration

Calibration controls are located on the front of the instrument under the calibration cover. The controls may be adjusted with a 1/8-inch blade screwdriver.

Note:

Local procedures may supersede the following

The instrument may be calibrated using Exposure Rate Calibration or CPM Calibration. Both methods are described below. Unless otherwise specified, the instrument is calibrated to Exposure Rate at the factory.

Note:

Measure High Voltage with a Model 500 Pulser or a High Impedance voltmeter with a high meg probe. If one of these instruments is not available use a voltmeter with a minimum of 1000 megohm input resistance.

Exposure Rate Calibration

Connect the input of the instrument to a negative pulse generator, such as a Ludlum Model 500 Pulser.

Caution!

The instrument input operates at a high potential. Connect the pulse generator through a 0.01μF, 3,000-volt capacitor, unless the pulse generator is already protected.

Adjust the HV control for the proper operation voltage of the detector to be used. Disconnect the Pulser and connect the detector to the instrument.

Turn the range selector switch to the ×100 position. Expose the detector to a calibrated gamma field which corresponds to approximately 80% of full-scale meter deflection. Adjust the ×100 calibration control for the proper reading.

Reposition the detector so the field corresponds to approximately 20% of full-scale meter deflection. Confirm that the meter reading is within ± 10% of the field.

Repeat this process for the ×10, ×1 and ×0.1 ranges.

If your gamma exposure range cannot calibrate two positions on each scale, the Pulser may be used to "electronically calibrate" the remaining points. Reconnect the Pulser to the instrument and determine the count rate conversion at a previous range calibration point. Then use that conversion rate to calibrate other points or scales.

If for example, you can exposure rate calibrate the 400 μR/hr point, first use the Pulser to get the count rate equivalent to the calibrated 400 μR/hr point. Then switch the Pulser "multiplier" switch to the next lower setting, and adjust the appropriate calibration control on the Model 3 for the meter to read 40 μR/hr.

CPM Calibration

Connect the input of the instrument to a negative pulse generator, such as a Ludlum Model 500 Pulser.

Caution!

The instrument input operates at a high potential. Connect the pulse generator through a 0.01μF, 3,000-volt capacitor, unless the pulse generator is already protected

Adjust the HV control for the proper operating voltage of the detector to be used. Adjust the Pulser negative pulse frequency to provide a meter

deflection of approximately 80% of full-scale on the ×100 range. Adjust the ×100 calibration control for the proper reading.

Check the 20% scale indication of the Model 3 by reducing the Pulser count rate by a factor of 4. The Model 3 should read within 10% of the actual pulse rate. Decrease the pulse rate of the Model 500 by one decade and turn the Model 3 range selector to the next lower range. Repeat the above procedure for the remaining lower ranges.

Note:

In the event that any reading is not within 10% of the true value on any scale after any of the above calibration methods is performed, a reading within 20% of true value shall be acceptable- if a calibration graph or chart is provided with the instrument. Instruments that cannot meet these criteria are defective and require repair.

Establishing an Operating Point

The operating point for the instrument and detector is established by setting the instrument high voltage (HV). The proper selection of this point is the key to instrument performance. Efficiency, background sensitivity and noise are fixed by the physical makeup of the given detector and rarely vary from unit to unit. However, the selection of the operating point makes a marked difference in the apparent contribution of these three sources of count.

In setting the operating point, the final result of the adjustment is to establish the system gain so that the desirable signal pulses (including background) are above the discrimination level and the unwanted pulses from noise are below the discrimination level and are therefore not counted. The system gain is controlled by adjusting the high voltage.

Note:

Measure the high voltage with a Ludlum Model 500 Pulser. If the Pulser does not have a high voltage readout, use a high impedance voltmeter with at least 1000 megohm input resistance to measure the high voltage.

G-M Detectors: In the special case of G-M detectors, a minimum voltage must be applied to establish the Geiger-Mueller characteristic. The output pulse height of the G-M Detector is not proportional to the energy of the detected radiation. Most G-M detectors operate at 900 volts, although some miniature detectors operate at 400-500 volts. Refer to the detector operating manual for specific recommendations. If a recommended setting is unavailable, plot a HV versus count rate curve to produce a plateau graph similar to the one displayed below. Adjust the HV for 25-50 volts above the knee or start of the plateau. For mixed detector use, the high voltage may be tailed for both, as long as the G-M detector is operated within the recommended voltage range.

Scintillators: Scintillation type detectors have a wide gain spectrum, typically 1000:1 at a single operating point. An operating voltage versus count rate curve (plateau) must be established to determine the proper operating voltage. The operating voltage is typically set above the knee of the plateau. Plot the HV versus background and source count to produce a plateau graph similar to the one in the figure below. Adjust the HV to 25-50 volts above the knee or start of the plateau. This provides the most stable operating point for the detector.

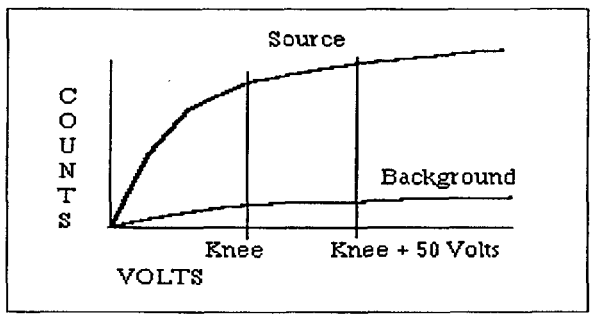

Note:

If more than one detector is to be used with the instrument and the operating voltages are different, the HV will have to be readjusted for each detector substitution.

Maintenance

Instrument maintenance consists of keeping the instrument clean and periodically checking the batteries and the calibration. The Model 3 instrument may be cleaned with a damp cloth (using only water as the

wetting agent). Do not immerse instrument in any liquid. Observe the following precautions when cleaning:

1. Turn the instrument OFF and remove the batteries.
2. Allow the instrument to sit for 1 minute before accessing internal components.

Recalibration

Recalibration should be accomplished after maintenance or adjustments have been performed on the instrument. Recalibration is not normally required following instrument cleaning, battery replacement, or detector cable replacement.

Note:

Ludlum Measurements, Inc. recommends recalibration at intervals no greater than one year. Check the appropriate regulations to determine required recalibration intervals.

Ludlum Measurements offers a full service repair and calibration department. We not only repair and calibrate our own instruments but most other manufacturer's instruments. Calibration procedures are available upon request for customers who choose to calibrate their own instruments.

Batteries

The batteries should be removed any time the instrument is placed into storage. Battery leakage may cause corrosion on the battery contacts, which must be scraped off and/or washed using a paste solution made from baking soda and water. Use a spanner wrench to unscrew the battery contact insulators, exposing the internal contacts and battery springs. Removal of the handle will facilitate access to these contacts.

Note:

Never store the instrument over 30 days without removing the batteries. Although this instrument will operate at very high ambient temperatures, battery seal failure may occur at temperatures as low as 100°F.

Section 7

Troubleshooting

Occasionally, you may encounter problems with your LMI instrument or detector that may be repaired or resolved in the field, saving turnaround time and expense in returning the instrument to us for repair. Toward that end, LMI electronics technicians offer the following tips for troubleshooting the most common problems. Where several steps are given, perform them in order until the problem is corrected. Keep in mind that with this instrument, the most common problems encountered are: (1) detector cables, (2) sticky meters, (3) battery contacts.

Note that the first troubleshooting tip is for determining whether the problem is with the electronics or with the detector. A Ludlum Model 500 Pulser is invaluable at this point, because of its ability to simultaneously check high voltage, input sensitivity or threshold, and the electronics for proper counting.

We hope these tips will prove to be helpful. As always, please call if you encounter difficulty in resolving a problem or if you have any questions.

Troubleshooting Electronics which utilize a G-M Detector or Scintillator

SYMPTOM	POSSIBLE SOLUTION
no power (or meter does not reach BAT TEST or BAT OK mark)	1. Check batteries and replace if weak. 2. Check polarity (See marks inside batter lid). Are the batteries installed backwards?

SYMPTOM	POSSIBLE SOLUTION
no power (or meter does not reach BAT TEST or BAT OK mark) (continued)	3. Check battery contacts. Clean them with rough sandpaper or use an engraver to clean the tips. 4. Remove the can and check for loose or broken wires.
nonlinear Readings	1. Check the high voltage (HV) using a Ludlum Model 500 Pulser (or equivalent). If a Multimeter is used to check the HV, ensure that one with high impedance is used, as a standard Multimeter could be damaged in this process. 2. Check for noise in the detector cable by disconnecting the detector, placing the instrument on the lowest range setting, and wiggling the cable while observing the meter face for significant changes in readings. 3. Check for "sticky" meter movement. Does the reading change when you tap the meter? Does the meter needle "stick" at any spot? 4. Check the "meter zero." Turn the power OFF. The meter should come to rest on "0".
meter goes full-scale or "pegs out"	1. Replace the detector cable to determine whether or not the cable has failed- causing excessive noise. 2. Check the HV and, if possible, the input threshold for proper setting.

SYMPTOM	POSSIBLE SOLUTION
meter goes full-scale or "pegs out" (continued)	3. Remove the can and check for loose or broken wires.
	4. Ensure that the instrument's "can" is properly attached. When attached properly, the speaker will be located on the left side of the instrument. If the can is on backwards, interference between the speaker and the input preamplifier may cause noise.
no response to radiation	1. Substitute a "known good" detector and/or cable.
	2. Has the correct operating voltage been set? Refer to the calibration certificate or detector instruction manual for correct operating voltage. If the instrument uses multiple detectors, confirm that the high voltage is matched to the current detector being used.
no audio	1. Ensure that the AUD ON-OFF switch is in the ON position.
	2. Remove the instrument housing and check the connection between the circuit board and the speaker. Plug in the 2-pin connector if necessary.

Troubleshooting G-M Detectors

1. If the tube has a thin mica window, check for window breakage. If damage is evident, the tube must be replaced.

2. Check the HV. For most G-M tubes, the voltage is normally 900 Vdc, or 460-550 Vdc for "peanut" tubes (Ludlum Model 133 series).

3. If the input sensitivity is too low, the user could see some double-pulsing.

4. Wires to the tube may be broken or the crimped connector could have a loose wire.

Troubleshooting Scintillators

1. Alpha or alpha/beta scintillators are prone to light leaks. They can be tested for this problem in a dark room or with a bright light. If a light leak is determined, changing the Mylar window assembly will usually fix the problem.

Note:

When replacing the window, make sure to use a window made with the same thickness Mylar and the same number of layers as the original window.

2. Verify that the HV and input sensitivity are correct. Alpha and gamma scintillators typically operate from 10-35 mV. High voltage varies with the photomultiplier tubes (PMT) from as low as 600 Vdc, to as high as 1400 Vdc.

3. On a gamma scintillator, visually inspect the crystal for breakage or humidity leakage. Water inside the crystal will turn it yellow and gradually degrade performance.

4. Check the PMT to see if the photocathode still exists. If the end of the PMT is clear (not brownish), this indicates a loss of vacuum which will render the PMT useless.

Section 8

Technical Theory of Operation

Low Voltage Supply

Battery voltage is coupled to U11 and associated components (a switching regulator) to provide 5 volts at pin 8 to power all logic circuits. A voltage divider (R27 and R32) located at pin 1 of U11 sets the end-of-battery–life squeal at 2.0 Vdc. Components R12 and C30 provide filtering to create +5 VA used by the amplifier and discriminator circuits.

High Voltage Supply

High voltage is developed by pulses from the switching regulator U13 to transformer T1. High voltage is multiplied by the ladder network of diodes CR3 through CR7 and capacitors C18 through C27. High voltage is coupled back through R39 to pin 8 of U13. High voltage output is set by front panel potentiometer R42, which sets the voltage feedback of 1.31 Vdc to pin 8 of U13. R38 and C28 provide filtering.

Detector Input

Detector pulses are coupled from the detector through C6 to amplifier input pin 2 of U4. CR1 protects U4 from input shorts. R37 couples the detector to the high voltage supply.

Amplifier

A self-biased amplifier provides gain in proportion to R15 divided by R14, with some gain loss due to feedback capacitor C4. A transistor (pin 3 of U4) provides amplification. U6 is configures as a constant current source to pin 3 of U4. The output self-biases to 2 Vbe (approximately 1.4 volts) at the emitter of Q1. This provides just enough bias current through pin 3 of U4 to conduct all of the current from the current source. Positive pulses from the emitter of Q1 are coupled to the discriminator.

Discriminator

Comparator U8 provides discrimination. The discriminator is set by a voltage divider (R21 and R23), coupled to pin 3 of U8. As the amplified pulses at pin 4 of U8 increase above the discriminator voltage, 5 volt negative pulses are produced at pin 1 of U8. These pulses are coupled to pin 5 of U9 for meter drive and pin 12 of U9 for audio.

Audio

Discriminator pulses are coupled to univibrator pin 12 of U9. The front panel audio ON-OFF selector controls the reset at pin 13 of U9. When ON, pulses from pin 10 of U9 turn on oscillator U12, which drives the housing-mounted unimorph speaker. Speaker tone is set by R31 and C14. Tone duration is controlled by R22 and C7.

Scale Ranging

Detector pulses from the discriminator are coupled to univibrator pin 5 of U9. For each scale, the pulse width of pin 6 of U9 is changed by a factor of 10 with the actual pulse width being controlled by the front panel switch, the analog switches U1 and U2, and the related potentiometers. This arrangement allows the same current to be delivered to C9 by 1 count on the ×0.1 range as 1000 counts on the ×100 range.

Meter Drive

Pulses from pin 6 of U9 charge capacitor C9. A constant current driver (opamp U10 and transistor Q2) delivers proportional current to the meter. For battery test (BAT TEST), the meter is directly coupled by the analog switch U3 to the batteries through resistor R8.

Meter Reset

Ratemeter reset is initiated by changing the voltage differential at C9 to zero when the RESET button is depressed.

Fast/Slow Time Constant

For the slow time constant, C17 is switched from the output of the meter drive to parallel C9.

Section 9

Recycling

Ludlum Measurements, Inc. supports the recycling of the electronics products it produces for the purpose of protecting the environment and to comply with all regional, national and international agencies that promote economically and environmentally sustainable recycling systems. To this end, Ludlum Measurements, Inc. strives to supply the consumer of its goods with information regarding reuse and recycling of the many different types of materials used in its products. With many different agencies, public and private, involved in this pursuit it becomes evident that a myriad of methods can be used in the process of recycling. Therefore, Ludlum Measurements, Inc. does not suggest one particular method over another, but simply desires to inform its consumers of the range of recyclable materials present in its products, so that the user will have flexibility in following all local and federal laws.

The following types of recyclable materials are present in Ludlum Measurements, Inc. electronics products, and should be recycled separately. The list is not all-inclusive, nor does it suggest that all materials are present in each piece of equipment:

Batteries	Glass	Aluminum and Stainless Steel
Circuit Boards	Plastics	Liquid Crystal Display (LCD)

Ludlum Measurements, Inc. products which have been placed on the market after August 13, 2005 have been labeled with a symbol recognized internationally as the "crossed-out wheelie bin" which notifies the consumer that the product is not to be mixed with unsorted municipal waste when discarding; each material must be separated. The symbol will be placed near the AC receptacle, except for portable equipment where it will be placed on the battery lid.

The symbol appears as such:

Section 10

Parts List

	Reference	Description	Part Number
Model 3 Survey Meter	UNIT	Completely Assembled Model 3 Survey Meter	48-1605
Main Board, Drawing 464 × 204	BOARD	Completely Assembled Main Circuit Board	5464-204
CAPACITORS	C1	47pF, 100V	04-5660
	C2	0.1µF, 35V	04-5755
	C3	0.0047µF, 100V	04-5669
	C4	10pF, 100V	04-5673
	C5	0.01µF, 50V	04-5664
	C6	100pF, 3KV	04-5735
	C7	0.022µF, 50V	04-5667
	C8	1µF, 16V	04-5701
	C9	10µF, 25V	04-5655
	C10	100pF, 100V	04-5661
	C11	68µF, 10V	04-5654
	C12	10µF, 25V	04-5728
	C14	470pF, 100V	04-5668
	C15	220pF, 100V	04-5674
	C16	68µF, 10V	04-5654
	C17	47µF, 10V	04-5666
	C18-C27	0.01µF, 500V	04-5696
	C28	0.001µF, 2KV	04-5703
		or 100pF, 3KV	04-5735
	C29	10µF, 25V	04-5655
	C30-C31	1µF, 16V	04-5701
	C32	470pF, 100V	04-5668

	Reference	Description	Part Number
TRANSISTORS	Q1	MMBT3904LT1	05-5841
	Q2	MMBT4403LT1	05-5842
INTEGRATED CIRCUITS	U1-U3	MAX4542ESA	06-6453
	U4-U5	CMXT3904	05-5888
	U6	CMXT3906	05-5890
	U7	MAX4541ESA	06-6452
	U8	MAX985EUK-T	06-6459
	U9	CD74HC4538M	06-6297
	U10	LMC7111BIM5X	06-6410
	U11	LT1304CS8-5	06-6434
	U12	MIC1557BM5	06-6457
	U13	LT1304CS8	06-6394
DIODES	CR1	CMPD2005S	07-6468
	CR2	RECTIFIER CMSH1-40M	07-6411
	CR3-CR7	CMPD2005S	07-6468
	CR9	RECTIFIER CMSH1-40M	07-6411
SWITCHES	SW1	D5G0206S-9802	08-6761
	SW2	TP11LTCQE	08-6770
	SW3-SW4	7101SDCQE	08-6781
POTENTIOMETERS / TRIMMERS	R33	250K, 64W254, ×100	09-6819
	R34	250K, 64W254, ×10	09-6819
	R35	500K, 64W504, ×1	09-6850
	R36	250K, 64W254, ×0.1	09-6819
	R42	1.2M, 3296W, HV	09-6814
RESISTORS	R1-R5	200K, 1/8W, 1%	12-7992
	R6	8.25K, 1/8W, 1%	12-7838
	R7	10K, 1/8W, 1%	12-7839
	R8	2.37K, 1/8W, 1%	12-7861
	R9-R11	10K, 1/8W, 1%	12-7839
	R12	200 Ohm, 1/8W, 1%	12-7846
	R13	10K, 1/8W, 1%	12-7839
	R14	4.75K, 1/8W, 1%	12-7858

	Reference	Description	Part Number
	R15	200K, 1/8W, 1%	12-7992
	R16	10K, 1/8W, 1%	12-7839
	R17	1K, 1/8W, 1%	12-7832
	R18	4.75K, 1/8W, 1%	12-7858
	R19	2K, 1/8W, 1%	12-7926
	R20-R21	100K, 1/8W, 1%	12-7834
	R22	1M, 1/8W, 1%	12-7844
	R23	2.49K, 1/8W, 1%	12-7999
	R24	14.7K, 1/8W, 1%	12-7068
	R25	200K, 1/4W, 1%	12-7992
	R26	100K, 1/4W, 1%	12-7834
	R27	68.1K, 1/8W, 1%	12-7881
	R28	100K, 1/8W, 1%	12-7834
	R29	1K, 1/8W, 1%	12-7832
	R30	100K, 1/8W, 1%	12-7834
	R31	475K, 1/8W, 1%	12-7859
	R32	100K, 1/8W, 1%	12-7834
	R37	100K, 1/8W, 1%	12-7834
	R38	2.2M, 1/8W, 1%	12-7986
	R39	500M, 3KV, 2%	12-7031
	R40	402K, 1/8W, 1%	12-7888
	R44	1K, 1/4W, 1%	12-7832
CONNECTORS			
	P1	640456-5 - MTA100	13-8057
	P2	640456-6 - MTA100 (installed as required)	13-8095
	P3	640456-2 - MTA100	13-8073
INDUCTOR	L1	22 μH	21-9808
TRANSFORMER	T1	31032R	21-9925

Wiring Diagram, Drawing 464 × 212

CONNECTORS	J1	MTA100×5, MAIN BOARD 5464-204	13-8140
	J2	OPTIONAL (M3 overload) MTA100×6, 5464-204	13-8171
	J3	MTA100×2, MAIN BOARD 5464-204	13-8178

	Reference	Description	Part Number
AUDIO			
	DS1	UNIMORPH TEC3526-PU	21-9251
BATTERIES			
	B1-B2	"D" DURACELL BATTERY	21-9313
MISCELLANEOUS			
	*	PORTABLE BATTERY CONTACT ASSEMBLY	2001-042
	*	MODEL 3 CASTING	7464-219
	*	MODEL 3 MAIN HOUSING	8464-035
	*	PORTABLE CAN ASSEMBLY (MTA)	4363-441
	*	PORTABLE KNOB	08-6613
	M1	METER ASSEMBLY METER BEZEL W/GLASS W/O SCREWS	4364-188
	*	METER MOVEMENT (1mA)	15-8030
	*	PORTABLE METER FACE	7363-136
	*	HARNESS-PORT CAN WIRES	8363-462
	*	BATTERY LID W/O LATCH KIT MODEL 3	2363-191
	*	PORTABLE LATCH KIT W/O BATTERY LID	4363-349
	*	PORTABLE HANDLE(GRIP) W/SCREWS	4363-139
	*	PORTHANDLE FOR CLIP W/SCREWS	4363-203
	*	REPLACEMENT CABLE (STD 39")	40-1004
	*	CLIP (44-3 TYPE) W/SCREWS	4002-026-01
	*	CLIP (44-6 TYPE) W/SCREWS	4010-007-01
	*	LABEL-M3 CALIBRATION	2310602
	*	LABEL-M3 BATTERY LID	2310601
	*	LABEL-M3 FACEPLATE	2310603

Section 11

Drawings and Diagrams

MAIN CIRCUIT BOARD, Drawing 464 × 204 (3 sheets)

MAIN CIRCUIT BOARD LAYOUT, Drawing 464 × 205 (2 sheets)

CHASSIS WIRING DIAGRAM, Drawing 464 × 212

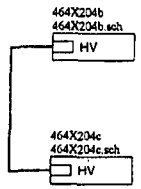

LUDLUM MEASUREMENTS, INC.			PO Box 810 501 Oak Street Sweetwater, Texas 79556 U.S.A. 1-800-622-0828		
Drawn: SA	02/08/07	Title: MAIN BOARD			
Design: DL	02/08/07	Model: M3			
Check:		Board#: 5464-204			
Approve:		Sheet: 1 of 3		Series	Sheet
14:47:19	8-Feb-2007	Rev: 2		464	204
464x204a.sch					

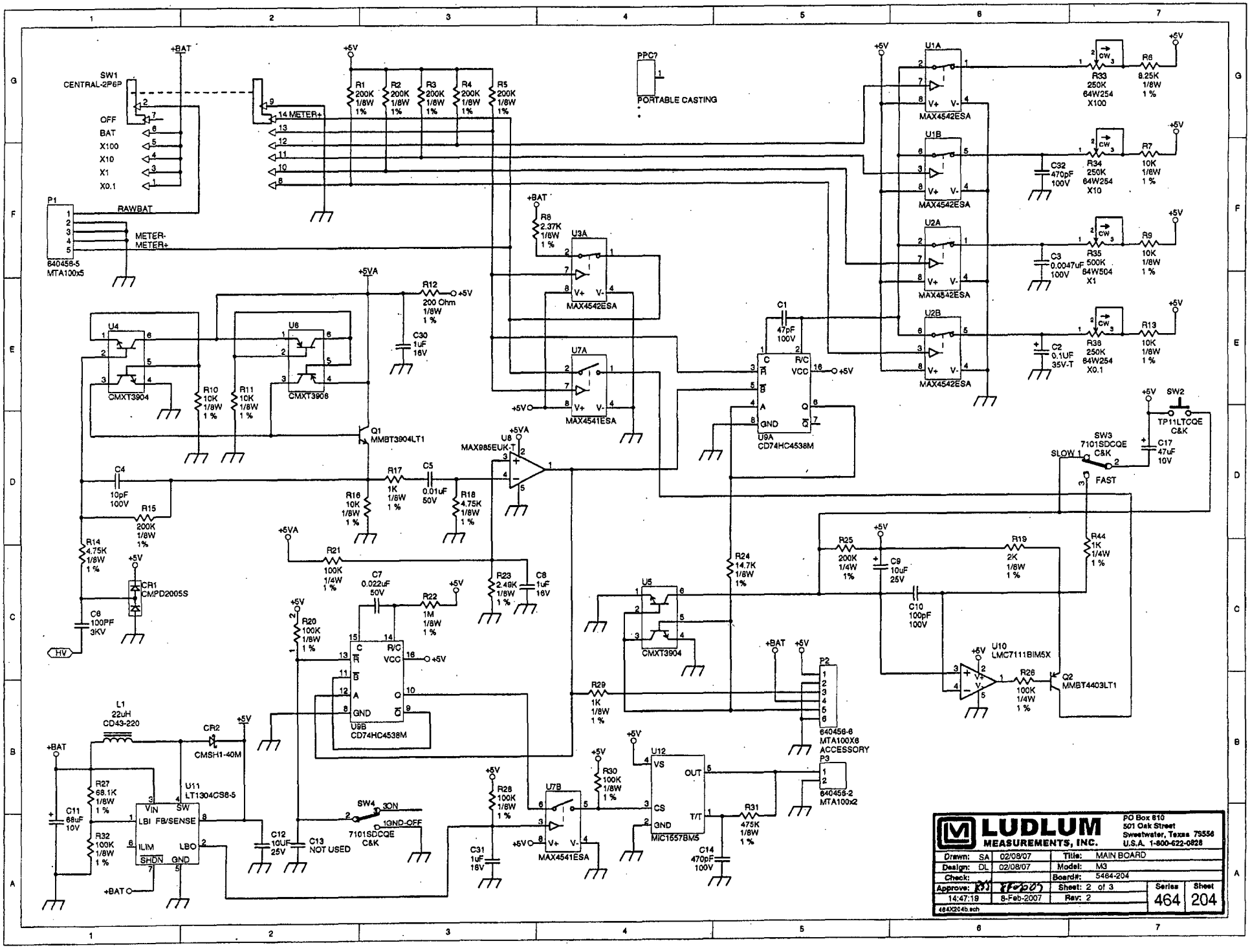
SW1
CENTRAL-2P6P
OFF
BAT
X100
X10
X1
X0.1
P1
640456-5
MTA100x5
RAWBAT
METER-
METER+
14 METER+
R1 200K 1/8W 1%
R2 200K 1/8W 1%
R3 200K 1/8W 1%
R4 200K 1/8W 1%
R5 200K 1/8W 1%
PPC?
PORTABLE CASTING
U1A
U1B
U2A
U2B
MAX4542ESA
R33 250K 64W254 X100
R34 250K 64W254 X10
R35 500K 64W504 X1
R36 250K 64W254 X0.1
R6 8.25K 1/8W 1%
R7 10K 1/8W 1%
R9 10K 1/8W 1%
R13 10K 1/8W 1%
C32 470pF 100V
C3 0.0047uF 100V
C2 0.1UF 35V-T
R8 2.37K 1/8W 1%
U3A
U7A
MAX4541ESA
R12 200 Ohm 1/8W 1%
C30 1uF 16V
U4
U6
CMXT3904
CMXT3906
R10 10K 1/8W 1%
R11 10K 1/8W 1%
Q1 MMBT3904LT1
C1 47pF 100V
U9A
CD74HC4538M
U8
MAX985EUK-T
C4 10pF 100V
R15 200K 1/8W 1%
R14 4.75K 1/8W 1%
CR1 CMPD2005S
C6 100PF 3KV
HV
R17 1K 1/8W 1%
C5 0.01uF 50V
R16 10K 1/8W 1%
R18 4.75K 1/8W 1%
R21 100K 1/4W 1%
C7 0.022uF 50V
R22 1M 1/8W 1%
R23 2.49K 1/8W 1%
C8 1uF 16V
R20 100K 1/8W 1%
U9B
CD74HC4538M
R24 14.7K 1/8W 1%
U5
CMXT3904
R29 1K 1/8W 1%
R25 200K 1/4W 1%
C9 10uF 25V
R19 2K 1/8W 1%
C10 100pF 100V
R44 1K 1/4W 1%
U10
LMC7111BIM5X
R26 100K 1/4W 1%
Q2 MMBT4403LT1
SW2
TP11LTCQE
C&K
SW3
7101SDCQE
C&K
SLOW
FAST
C17 47uF 10V
P2
640456-6
MTA100X6
ACCESSORY
P3
640456-2
MTA100x2
L1 22uH CD43-220
CR2 CMSH1-40M
C11 68uF 10V
R27 68.1K 1/8W 1%
R32 100K 1/8W 1%
U11
LT1304CS8-5
VIN
SW
LBI
FB/SENSE
ILIM
LBO
SHDN
GND
C12 10UF 25V
C13 NOT USED
SW4
3ON
1GND-OFF
7101SDCQE
C&K
R28 100K 1/8W 1%
C31 1uF 16V
U7B
MAX4541ESA
R30 100K 1/8W 1%
U12
MIC1557BM5
VS
OUT
CS
GND
T/T
R31 475K 1/8W 1%
C14 470pF 100V
LUDLUM MEASUREMENTS, INC.
PO Box 810
501 Oak Street
Sweetwater, Texas 79556
U.S.A. 1-800-622-0828
Drawn: SA 02/08/07
Design: DL 02/08/07
Check:
Approve: 8-Feb-07
14:47:19 8-Feb-2007
Title: MAIN BOARD
Model: M3
Board#: 5464-204
Sheet: 2 of 3
Rev: 2
Series 464
Sheet 204
464X204b.sch

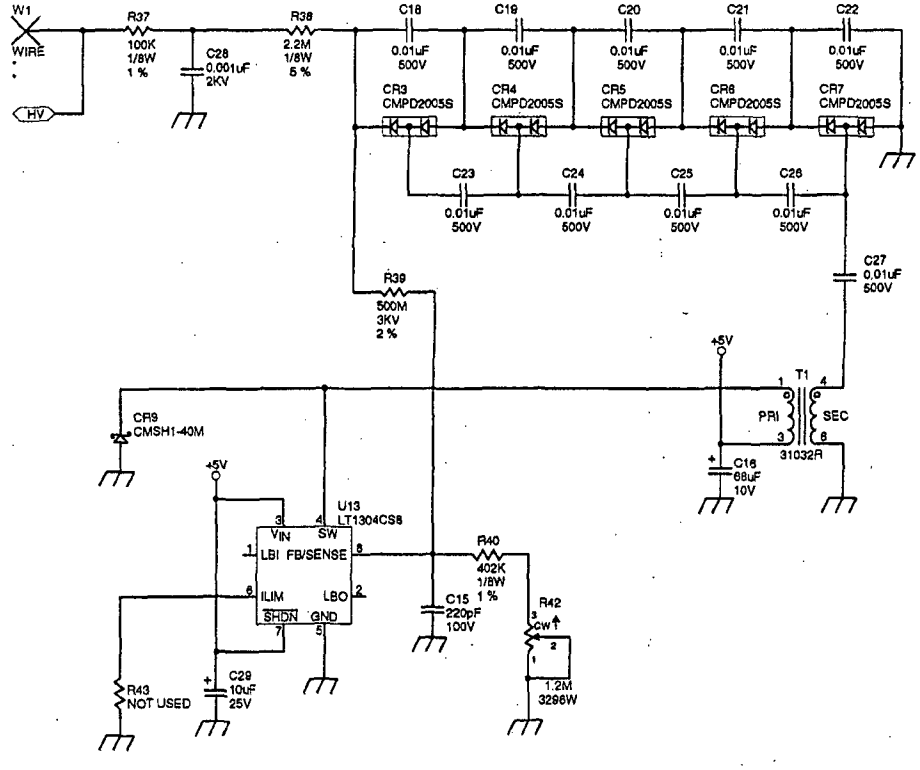

LUDLUM MEASUREMENTS, INC.			PO Box 810 501 Oak Street Sweetwater, Texas 79556 U.S.A. 1-800-622-0828		
Drawn: SA	02/08/07	Title:	MAIN BOARD		
Design: DL	02/08/07	Model:	M3		
Check:		Board#:	5464-204		
Approve: RJ	8 Feb 07	Sheet: 3 of 3		Series	Sheet
14:47:18	8-Feb-2007	Rev: 2		464	204
464X204c.sch					

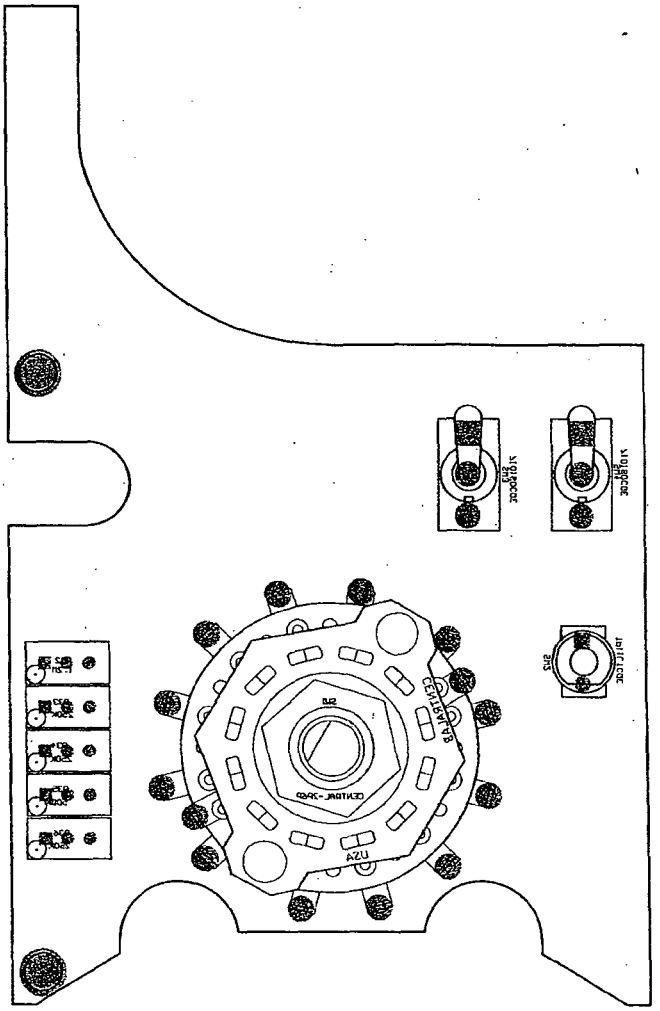

Drawn: SA	02/08/07	Title: MAIN BOARD			
Design: DL	02/08/07				
Check:		Model: M3			
Approve: RJS	8Feb07	Board#: 5464–204			
Layer:		Rev: 2	Series	Sheet	
	14:47:02 8–Feb–2007	SCALE: 1.21	464	205	

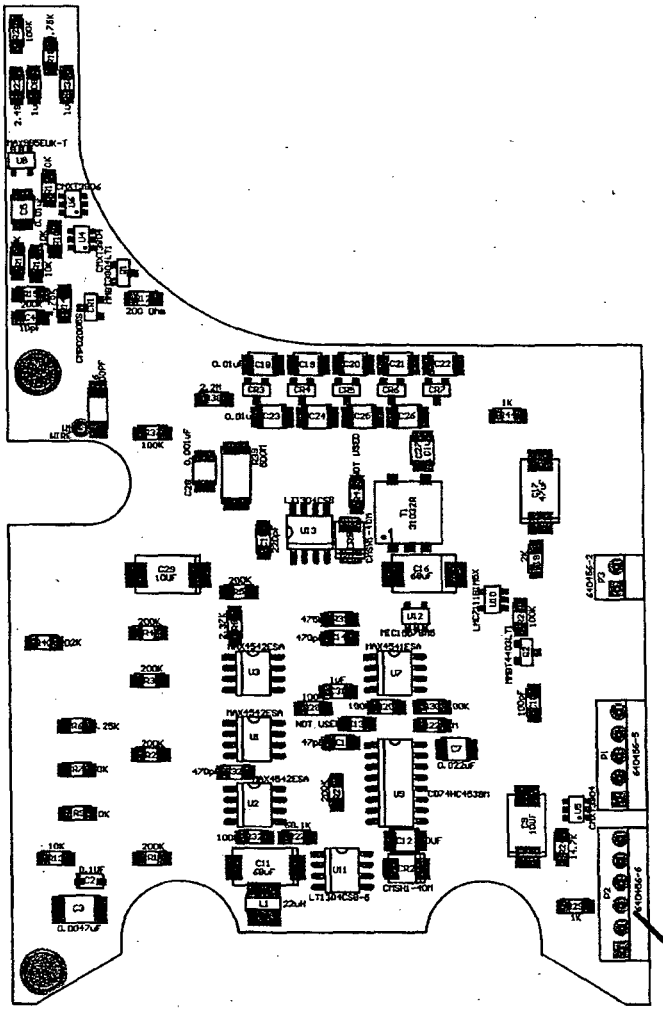

INSTALL AS REQUIRED

Drawn: SA	02/08/07	Title: MAIN BOARD			
Design: DL	02/08/07				
Check:		Model: M3			
Approve: RSS	8Feb07	Board#: 5464-204			
Layer:		Rev: 2	Series	Sheet	
	14:47:01 8-Feb-2007	SCALE: 1.21	464	205	

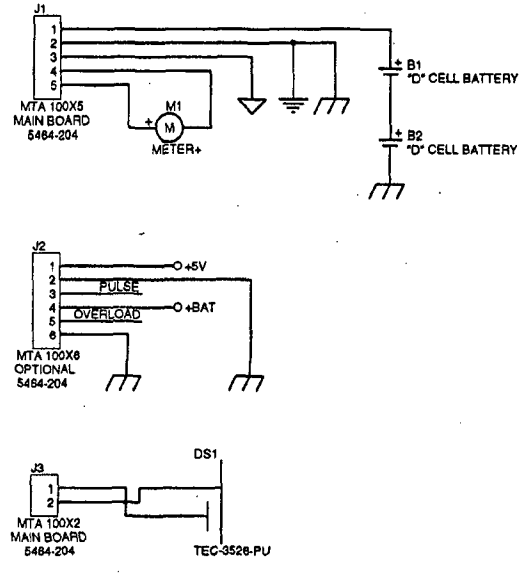

LUDLUM MEASUREMENTS, INC.	PO Box 810 501 Oak Street Sweetwater, Texas 79556 U.S.A. 1-800-622-0828		
Drawn: JK	01-JUN-004	Title: WIRING DIAGRAM	
Design: RSS	01-JUN-04	Model: M3	
		Board#: 5464-204	
Approve: JWS	01-Jun-04	Sheet: 1 of 1	Series 464 / Sheet 212
08:36:52	1-Jun-2004	Rev:	
464X212.wd			

Escort Elf® Pump

instruction manual

⚠ WARNING

THIS MANUAL MUST BE CAREFULLY READ BY ALL INDIVIDUALS WHO HAVE OR WILL HAVE THE RESPONSIBILITY FOR USING OR SERVICING THE PRODUCT. Like any piece of complex equipment, this product will perform as designed only if it is used and serviced in accordance with the manufacturer's instructions. OTHERWISE, IT COULD FAIL TO PERFORM AS DESIGNED AND PERSONS WHO RELY ON THIS PRODUCT FOR THEIR SAFETY COULD SUSTAIN SEVERE PERSONAL INJURY OR DEATH.

The warranties made by Mine Safety Appliances Company with respect to the product are voided if the product is not used and serviced in accordance with the instructions in this manual. Please protect yourself and others by following them. We encourage our customers to write or call regarding this equipment prior to use or for any additional information relative to use or repairs.

In the U.S., to contact your nearest stocking location, dial toll-free 1-800-MSA-2222.
To contact MSA International, dial 1-800-672-7777.

© Mine Safety Appliances Company 1997 - All Rights Reserved

Manufactured by
MINE SAFETY APPLIANCES COMPANY
P.O. Box 427, Pittsburgh, Pennsylvania 15230

(L) Rev 4 813549

⚠ WARNINGS

1. Do not charge the battery pack in areas that may contain a flammable mixture of combustible gases, vapors, or dust and air; otherwise, an explosion may occur because a source of ignition exists during charging.
2. Do not operate the pump in oxygen-enriched atmospheres (more than 21% oxygen) containing combustible gases, vapors, or other materials. Fire or explosion can result from operating in these atmospheres.
3. Operate the pump with MSA p/n 497702 battery pack only. Do not use other batteries or power sources.
4. When using the pump in a hazardous area (with respect to fire or explosion) as specified in the National Electric Code (NEC) Article 500 - Hazardous (Classified) Locations, the pump must be labeled stating that it meets the design criteria of the specific Class, Division and Group. Users must operate the pump in accordance with the instructions for that Class, Division, and Group. A copy of the NEC Code can be obtained from the National Fire Protection Association, Batterymarch Park, Quincy, MA 02269.
5. Use only genuine MSA replacement parts when performing maintenance procedures described in this manual; failure to do so may seriously impair the ESCORT ELF Pump performance. Repair or alteration beyond the scope of these maintenance instructions or by anyone other than authorized MSA service personnel could cause the product to fail to perform as designed, and persons who rely on this product for their safety could sustain severe personal injury or death.

FAILURE TO COMPLY WITH THE ABOVE WARNINGS CAN RESULT IN SERIOUS PERSONAL INJURY OR DEATH

⚠ CAUTIONS

1. Do not use the pump with organic fluids in an impinger without an absorber trap; otherwise, the pump will be damaged.
2. Use only an MSA Omega (Ω) Charger to charge the pump.
3. If, after thoroughly reading this manual, you are uncertain of the installation, operation, or maintenance procedures, call 1-800-MSA-2222 for assistance.

Table of Contents

Section 1
General Information **1-1**

Introduction 1-1
Operating Specifications 1-2

Section 2
Theory of Operation **2-1**

Introduction 2-1
Functional Description of Operation 2-1
Figure 2-1. Flow-Feedback Control System 2-2
LED Indicator Operation 2-3

Section 3
Operation **3-1**

Charging the Battery Pack 3-1
⚠ WARNING 3-1
⚠ CAUTION 3-1
Operating Time 3-1
Personal/Area Sampling 3-2
Figure 3-1. Typical Operating Time Graph 3-2
Operating the Pump 3-3

Section 4
Routine Maintenance **4-1**

Periodic Maintenance 4-1
Checking the Inlet Filter 4-1
Figure 4-1. Checking the Inlet Filter 4-1
Filter Replacement 4-2
Frit Replacement 4-2
Battery Pack Replacement 4-2
Figure 4-2. Replacing the Battery Pack 4-3

Section 5
ELF Sensor Calibration **5-1**

Section 6
ELF Sensor Calibration for Pumps used in the U.S. Government Mine Safety and Health Administration (MSHA) Coal Mine Dust Sampling Program **6-1**

Section 7
Repairs and Replacement Parts **7-1**

Troubleshooting 7-1
⚠ WARNING 7-1
Corrective Maintenance 7-1
Table 7-1. Troubleshooting Guidelines 7-2
Unplugging the Electrical Connectors 7-3
Reattaching the Electrical Connectors 7-3
Pump & Drive Assembly, Outlet Dampener, or Pressure Sensor Replacement 7-4
Printed Circuit Control Board Replacement 7-4
Obtaining Replacement Parts 7-5
Figure 7-1. Replacement Parts 7-6
Table 7-2. Replacement Parts List 7-7
Figure 7-2. Replacement Parts (cont.) 7-8

Section 1
General Information

Introduction

The ESCORT ELF Pump introduces a totally new, patented concept of flow control and flow readout (U.S. Patent 5,295,790). The heart of this new system is the electronic laminar flow sensor. The ELF sensor combines a laminar flow element and a differential pressure sensor to measure sample volume flow rate. This measure of flow rate is not affected by changes in sample loading or the other factors that affect rotameter-type indicators used in other pumps. The ELF sensor provides an electronic signal which is linearly related to flow rate. This signal is used in the pump control circuit to maintain the chosen flow rate constant to within ±2.5% and is used in the readout circuit to allow the digital display of the actual flow rate to within ±0.1 liters per minute (LPM).

The ESCORT ELF sensor and control circuitry are very stable both in storage and use. Together they form a secondary standard to maintain the calibration accuracy for at least 200 hours of pump usage. A built-in operating time totalizer helps remind the user of the total operating hours since the last calibration check was performed against a primary flow standard. This totalizer automatically resets to 0 when a calibration is performed. If the pump is used in the coal mine dust sampling program, these calibration checks should be done after each 200 hours of use. If the pump is used for OSHA compliance sampling, the recalibration should be performed monthly.

Operating Specifications	
ELECTRICAL CHARACTERISTICS	
POWER SUPPLY	4.8-volt battery pack of four nickel-cadmium cells
BATTERY PACK CAPACITY	1.8 ampere hour
BATTERY PACK RECHARGE TIME	14-16 hours (overnight) with recommended chargers
CHARGING TEMPERATURE	10° to 30°C (50° to 86°F)
TYPICAL BATTERY PACK LIFE	300 or more charging cycles
OPERATING AND PHYSICAL CHARACTERISTICS	
FLOW CONTROL	Volumetric flow rate is controlled at the set-point with automatic compensation for battery voltage, altitude, temperature, and sample load changes
OPERATING RANGE	0.5 TO 3.0 LPM
	5 to 30 inches water load up to 1.0 LPM; up to 30 inches of water load up to 2.0 LPM; up to 20 inches of water load up to 2.5 LPM; and up to 10 inches of water load up to 3.0 LPM
FLOW BLOCKAGE DETECTION	When flow is blocked the FLOW FAULT LED indicator lights and stays lighted until the cause of flow blockage is removed. If blocked for longer than 1.5 minutes, the pump shuts down. Pumps that are ordered for coal mine dust sampling are factory-programmed to *not* shut down
FLOW READOUT	Liquid crystal digital display with 0.01 LPM resolution from 0.5 to 3.0 LPM
	Accuracy ±2.5% from 1.0 to 3.0 LPM, 0° to 45°C ±5% from 1.0 to 3.0 LPM, -20° to 0°C and 45° to 65°C ±5% from 0.5 to 0.9 LPM, 0° to 45°C.

Operating Specifications	
ELAPSED TIME READOUT	Quartz controlled timer reads out to 999 minutes in 1-minute steps. Holds last reading after either flow fault or low battery shut-down, and when pump is OFF or in HOLD mode; resets to zero automatically when pump is turned ON. Timer does not count time when FLOW FAULT LED is lighted.
SCHEDULED CALIBRATION	The pump has an operating hours totalizer to help remind user of the need for periodic calibration checks.
OPERATING TIME	Varies with flow rate, sampling device loading and temperature. Minimum eight-hour operation at 2.5 LPM with 20-inch water load. (See FIGURE 3-1.)
LOW BATTERY FUNCTION	The pump shuts down and lights the LOW BATT LED when battery voltage drops below 4.1 volts
TEMPERATURE COMPENSATION	0° to 45°C (32° to 113°F) $\pm$2.5% accuracy -20° to 0°C and 45° to 65°C (-4° to $+149^{\circ}$F and 112° to 148°F) $\pm$5.0% accuracy
ALTITUDE COMPENSATION	Below sea-level to at least 10,000 ft.
DIMENSIONS	2 inches deep x 4 inches high x 3-7/8 inches wide (5.1 centimeters deep x 10.3 centimeters high x 9.8 centimeters wide)
WEIGHT	19 oz. (550 grams)
CASE	Case plastic is electrically conductive to reduce radio frequency interference; an optional leather case is available for pump protection during rough usage such as underground mining or construction and demolition work areas
SERIAL NUMBER IDENTIFICATION	Located on the side of the case under the battery pack (include number in correspondence with MSA)

Section 2
Theory of Operation

Introduction

This section describes the operation of the sample flow control and readout circuitry of the ESCORT ELF Pump.

Functional Description of Operation

The ESCORT ELF Pump contains a rechargeable battery pack, a motor-driven pump, the ELF sensor, and the electronic circuit to control and display the flow rate.

The battery pack consists of four nickel-cadmium cells. The cells are connected in series with a current limiting resistor to allow use in hazardous atmospheres (see "Warnings"). The pack also has a PTC resistor which functions as a self-resetting circuit breaker to prevent damage to the pack if the output terminals are accidentally shorted.

The motor-driven pump consists of an inlet pulsation dampener, a diaphragm pump, and silicone rubber inlet and exhaust valves. The diaphragm is driven by the motor to make one pump stroke with each revolution. The pulsation dampener acts as an elastic storage chamber to smooth the individual pump pulses to minimize their effect on the sampling devices connected to the pump inlet.

The ELF sensor consists of a laminar flow element and a pressure sensor. All of the air flow through the pump passes from the exhaust port of the pump and through the laminar flow element. The element is a hollow cylinder of porous stainless steel. The air flowing through the narrow passages in the cylinder produces an air pressure difference between the outer and inner walls of the cylinder. This difference is

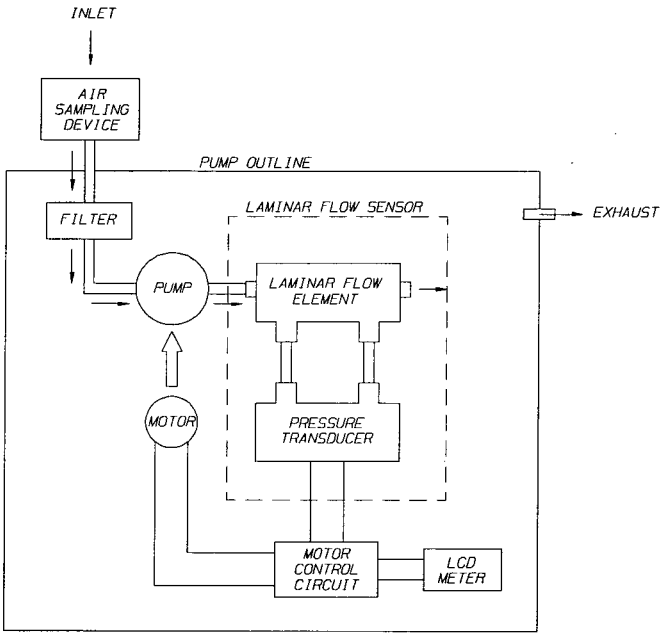

Figure 2-1. Flow-Feedback Control System

monitored by connections to the high and low pressure taps of a sensitive differential pressure sensor. The electrical signal from the sensor is a linear voltage, which is directly related to the air flow through the laminar element. This signal is compared to the flow set point in the electronic circuit and is used to control the flow at the set point. Any deviation in flow rate is sensed

and the motor power is adjusted to maintain the preset flow rate. In the case of a blocked flow or operation beyond the pump capacity where the flow cannot be brought to within ±0.1 LPM of the set point, the flow fault LED will be lighted.

LED Indicator Operation

- The RUN/HOLD LED assures the user that the unit is operating, even in poorly lit, noisy environments.
- The RUN/HOLD LED also indicates the HOLD function. If the pump is switched to HOLD, the pump shuts down, the timer stops, and the LED is switched to a blinking mode. When the RUN/HOLD switch is pressed again, the pump will restart and the timer will continue from its "hold" value.
- The LOW BATT LED indicates operation of the low battery detection circuit. When the battery pack drops to 4.1 volts, the circuit causes the pump to shut down, the timer to stop, and the LOW BATT LED to light. This limits further battery drain to just a few milliamperes, which, in turn, helps prevent deep discharging and battery pack damage upon recharging. It also helps prevent the invalidation of the sample being taken, because the timer stores the actual sample time and the flow rate is controlled up to the time of shut-down.
- The FLOW FAULT LED indicates operation of the flow blockage detection circuit. If the sample inlet (or the sampling device connected to the pump) is blocked, the FLOW FAULT LED lights until the cause of the flow fault is removed.
- The pump is normally factory-programmed so that a fault longer than 1.5 minutes will shut down the pump. The pump may be restarted from a flow fault shutdown by pressing the RUN/ HOLD switch. Restarting in this manner allows continuation of the sample period without having the timer reset to zero.
- The Flow Fault LED is lighted whenever the pump flow rate is more than ±0.1 LPM different from the set-point. It is normal for it to be lighted briefly while the pump is started or when a new set-point is selected.

Section 3
Operation

Charging the Battery Pack

Use any Omega™ charger (for example: P/N 494716, 495965, 800525 or 801759) for charging the battery pack. Remove the protective rubber plug and charge the battery pack for 14 to 16 hours. (Note that charging for longer periods will not reduce battery life, provided the charging is performed at room temperature.) The battery pack can be charged with the pack removed from the pump. Always replace the rubber plug after charging and before using the pump to prevent water entry into the jack.

⚠ WARNING

Do not charge the battery pack in areas that may contain a flammable mixture of combustible gases, vapors, or dust and air; otherwise, an explosion may occur because a source of ignition exists during charging.

⚠ CAUTION

Use only an MSA Omega (Ω) charger from MSA to charge the pump.

Operating Time

The maximum expected operating time for a pump with a fully charged battery pack depends on:

1. The selected flow rate.
2. The vacuum load imposed by the sampling device.
3. The temperature.
4. The age of the battery pack.

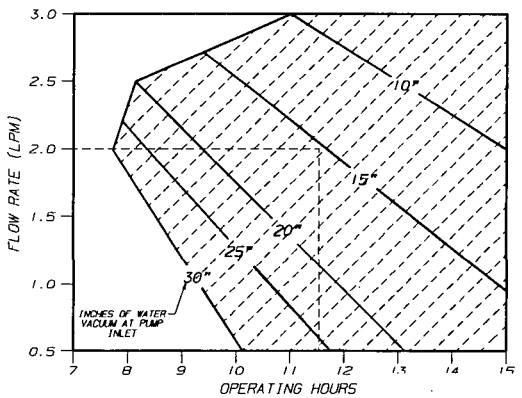

Figure 3-1. Typical Operating Time Graph

See FIGURE 3-1 for approximate operating times. The shaded area shows operating loads and flow rates within the pump specifications. The example shown with dashed lines is for a pump set for 2.0 LPM with a sampling load of 15"; the expected maximum operating time would be 11.5 hours. This figure is based on room temperature operation with a new pack. At 0 degrees Centigrade, the operating time will be reduced by 10%, 20% at -20oC. After several hundred charge/discharge cycles, the pack capacity may be reduced by 20%.

Personal / Area Sampling

The ESCORT ELF Pump is designed for either personal or area sampling of ambient air. It automatically provides a constant volumetric flow rate of the sample air through the sampling device (filter disc, impinger, or absorbent tube) to measure the concentration of airborne mists, dusts, particulates, gases, and vapors in the workplace.

Operating the Pump

1. Charge the battery pack for 16 hours using the MSA Omega (Ω) Charger.
   - Read the WARNING on the battery pack.
2. Connect the desired sampling device to the inlet fitting.
3. Press ON/OFF button until the RUN/HOLD LED lights.
   - The Flow Fault and Low Bat LEDs will then light. During the time these LEDs are being lighted, a number from 0 to 999 will be displayed. This is the total of the pump's operating hours since its last calibration.
   - When all three LEDs are lighted, the display changes to **8.88 LPM/MINS**, to show all segments are functional.
   - The pump will then begin operation. The LOW BAT LED will be dark if the battery voltage is above 4.1 volts. The Flow Fault LED will be dark when the flow rate is within 0.1 LPM of the setpoint.
4. Use the ↑ and ↓ switch buttons to adjust the flow setpoint if a new flow rate is desired. When either button is pressed:
   - RUN/HOLD LED will be dark
   - Display will show the flow setpoint being stepped up or stepped down to the new setpoint.
5. The RUN/HOLD button may be pressed to interrupt sampling without causing the timer to reset to zero.
6. Press the ON/OFF button at the end of sampling.
   - Total sample minutes will be on the display and will remain until the pump is turned ON again.
7. Check calibration monthly (every 200 hours of use for coal mine dust sampling).
8. Operate the pump with a sampling device connected to the inlet. Operation without a sampler attached will reduce the life of the pump inlet filter. Operation at very low flow rates may be unstable without an attached sampling device, such as a charcoal tube.

Section 4
Routine Maintenance

Periodic Maintenance

Checking the Inlet Filter

The pump inlet contains dust and water filters to protect the pump from particles and water in the sample air (FIGURE 4-1). If the filters become clogged, the sample flow may be blocked or an extra load placed on the pump; therefore, check the filters regularly.

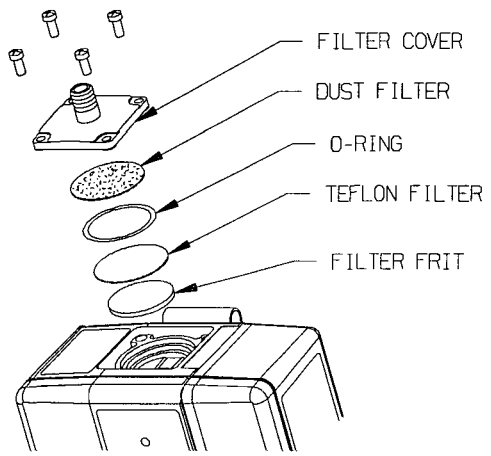

Figure 4-1. Checking the Inlet Filter

The frequency of the checks should depend on the amount of pump usage and the concentration of particles allowed to enter the pump. Usually, only the dust filter needs to be replaced. The Teflon* water filter should rarely need to be replaced. The water filter is very fragile and must be handled with care. Even a tiny pin hole will destroy its function. The filter frit should never need to be replaced if the other filters are maintained.

Filter Replacement

1. Remove the four screws holding the filter cover and O-ring.
2. Replace the filter with a new one.
3. Re-assemble the O-ring and cover.

Frit Replacement

1. Stab the frit center with a small screwdriver, and lift it out.
2. Press in a new frit.
3. Re-assemble the Teflon and dust filters, O-ring, and cover.

Battery Pack Replacement

(FIGURE 4-2 illustrates the battery pack.)

1. Remove the two screws securing the battery pack to the case.
2. Separate the pack from the case.
3. Make sure that the O-ring is in place on the replacement pack. Then, slide the pack into the pump case while pressing the case front and back to make sure the case edges go inside the edges of the pack.
4. Insert the two screws and tighten.

* Teflon is a trademark of the du Pont Company

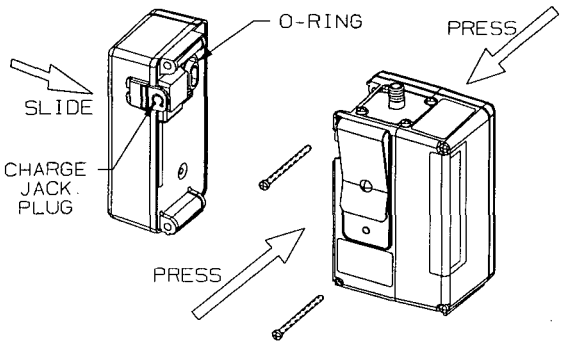

Figure 4-2. Replacing the Battery Pack

Section 5
ELF Sensor Calibration

1. Check pump inlet filter for dust; replace if heavily loaded.
2. Turn ON the pump and allow it to reach its flow rate setting.
3. If the pump is not set for 2.50 LPM, set it to 2.50.
4. Allow the pump to operate for 10 to 15 minutes at 2.50 LPM. To check for leaks, temporarily block the pump inlet; 0.02 LPM or less should be displayed. If not, check the inlet filter cover and o-ring for correct assembly.
5. Leave the pump set for 2.50 LPM and turn OFF the pump.
6. Connect a primary calibration standard to the pump.
7. Turn ON the pump; as the pump goes through its self-check sequence, press and hold the ON/OFF and RUN/HOLD switches simultaneously until the display reads CAL. Immediately release both buttons.

   NOTE: Failure to release both buttons will turn OFF the pump.

   - The display will show CAL and a countdown sequence of numbers from 9 through 0; thereafter, it will alternately display CAL and 2.50 LPM.
8. Operate the calibration standard and obtain at least six readings which are very close to one another.
9. Use the ↑ and ↓ switch buttons to step the pump display up or down until it agrees exactly with the average of the six readings.
10. Turn OFF the pump; the ELF sensor is now calibrated. Repeat monthly or every 200 hours of use.
11. When you next turn ON the pump, the operating hours will be reset to **0** and be displayed during the lighting of the FLOW FAULT and LOW BAT LEDs.

The BIOS DryCal should be used to calibrate or check the flow rate of an MSA Escort ELF pump only if an isolating flow restrictor (e.g., a filter or an orifice such as P/N 632646) providing at least 10" WC is placed in line between the pump and the calibrator. Failure to use such an isolation technique can cause a calibration inaccuracy on the order of 2% and is not recommended.

Section 6 ELF Sensor Calibration for Pumps used in the U.S. Government Mine Safety and Health Administration (MSHA) Coal Mine Dust Sampling Program

1. Check pump inlet filter for dust; replace if heavily loaded.
2. Turn ON the pump and allow it to reach its flow rate setting.
3. If the pump is not set for 2.00 LPM, set it to 2.00.
4. Allow the pump to operate for 10 to 15 minutes at 2.00 LPM. To check for leaks, temporarily block the pump inlet; 0.02 LPM or less should be displayed. If not, check the inlet filter cover and o-ring for correct assembly.
5. Leave the pump set for 2.00 LPM and turn OFF the pump.
6. Connect a primary calibration standard to the pump.
7. Turn ON the pump; as the pump goes through its self-check sequence, press and hold the ON/OFF and RUN/HOLD switches simultaneously until the display reads CAL. Immediately release both buttons.

   NOTE: Failure to release both buttons will turn OFF the pump.

   - The display will show CAL and a countdown sequence of numbers from 9 through 0; thereafter, it will alternately display CAL and 2.00 LPM.
8. Operate the calibration standard and obtain at least six readings which are very close to one another.

9. Use the ↑ and ↓ switch buttons to step the pump display up or down until it agrees exactly with the average of the six readings.
10. Turn OFF the pump; the ELF sensor is now calibrated. Repeat every 200 hours of use .
11. When you next turn ON the pump, the operating hours will be reset to **0** and will be displayed during the lighting of the FLOW FAULT and LOW BAT LEDs.

Section 7
Repairs and Replacement Parts

Troubleshooting

TABLE 7-1, "Troubleshooting Guidelines," lists the symptoms of the most common problems; it also lists their probable cause(s) and the action required to correct each problem. Use the guidelines if you cannot calibrate the ESCORT ELF Pump or if the pump does not operate properly. If you cannot resolve a problem by using the guidelines, call 1-800-MSA-2222 to locate a local MSA Repair Center.

⚠ WARNING

Use only genuine MSA replacement parts when performing the maintenance procedures described in this manual. Failure to do so may seriously impair instrument performance. Repair or alteration beyond the scope of these maintenance instructions or by anyone other than an MSA-trained service person could cause the product to fail to perform as designed, and persons who rely on this product for their safety could sustain severe personal injury or death.

Corrective Maintenance

When an inoperative part is located by using TABLE 7-1, Troubleshooting Guidelines, replace it according to one of the replacement procedures later in this section. Also refer to "Obtaining Replacement Parts" later in this section for information on how to order the necessary part from MSA.

Table 7-1. Troubleshooting Guidelines

SYMPTOM	PROBABLE CAUSE	CORRECTIVE ACTION
ON/HOLD LED indicator turns OFF prematurely; FLOW FAULT LED Indicator may be ON or OFF and LOW BATT LED is turned ON	1. Inlet filter clogged or blocked with water	1. Replace filter according to "Checking the Inlet Filter"
	2. Battery pack is degraded	2. Install new pack on pump by performing procedure described under "Battery Pack Replacement"
	3. Operation beyond flow and load limits	3. Reduce flow or replace sampler with lower load device
ON/HOLD LED and FLOW FAULT LED indicators turned ON, and pump will not run or, if it does run, no flow is displayed on readout	1. Pump motor connector improperly plugged into PC board	1. Check connector
	2. Pressure sensor connector fault	2. Check connector. Verify five pins are plugged in
	3. Pump motor inoperative	3. Replace pump and motor drive assembly according to procedure under "Replacing the Pump and Drive Assembly"
	4. Pressure sensor or PC board inoperative	4. Replace sensor or PC board
When inlet is blocked, the flow indication is not 0.02 lpm or less	1. Sample flow leaks	1. Check for leaking tube connection or O-ring seal at the inlet filter cover
LED indicator on charger does not turn ON when plug on-line cord is inserted in 115 VAC outlet and plug on charging cord is inserted in jack on battery pack	1. Power source inactive	1. Check and correct cause of power loss
	2. Charger failure	2. Replace charger
	3. Battery pack failure	3. Replace battery pack by performing procedure under "Replacing the Battery Pack"
Desired flow rate cannot be obtained under heavy sampling device loads within regime of FIGURE 3-1	1. Inlet filter partially clogged	1. Replace filter according to instructions under "Checking the Inlet Filter"
	2. Leak exists in sample flow system	2. Check for leaking tube connection or O-ring at the inlet filter cover

Unplugging the Electrical Connectors

Service procedures which require opening the ELF pump case require the unplugging of two electrical connectors:

1. Pull on the motor electrical connector to remove the motor wires from the printed circuit board.
2. Pull on the 5-pin ribbon cable to remove the connector from the ELF sensor.

Reattaching the Electrical Connectors

1. When reattaching the motor connector, make sure the angular ramp at the end faces towards the latch projecting from the printed circuit board socket.

   NOTE: The pump will operate with the connector installed the other way, but the above method is encouraged because the ramp and latch help keep the connector attached as the pump is knocked around during use.

2. When reattaching the connector to the ELF sensor, make sure pins #1 through #5 are straight and in line.

   NOTE: If these pins are bent, use needle-nose pliers to straighten and align them. Pin #6 is intentionally cut off because it is not used in the ELF pump.

3. Pull the cable so that the end of the connector is about 7/8" above the printed circuit board.
4. Hold the pump face in the right hand and position your thumb and forefinger around the top left hand corner of the pump face.
5. Hold the connector with these two fingers and hold the pump case with the left hand.
6. Position the connector so that an end pin is just inside the funnel opening of the corresponding pin socket.
7. Gradually tilt the connector to get the next pin just inside its socket, and repeat this process until all five pins are just inside their corresponding sockets.
8. Slowly press the connector onto the pins until they "bottom out."

9. Inspect the connector at the top and bottom to make sure all pins are correctly inserted.

Pump & Drive Assembly, Outlet Dampener, or Pressure Sensor Replacement

1. Remove two screws securing the battery pack to the case.
2. Remove the battery pack.
3. Remove the two screws securing the pump case.
4. Pull the 5-pin ribbon connector from the pressure sensor.
5. Pull the motor electrical connector from the PC board.
6. Remove the two screws securing the pump mounting collar to the back of the case.
7. Lift out the pump and drive while removing the inlet dampener connection from the fitting.

   NOTE: A drop of soap solution (SNOOP*) "worked in" at the end of the rubber tube makes removal easier and will prevent tearing the rubber tube.
8. Remove the two screws securing the pressure sensor.
9. Remove the pressure sensor and be careful not to drop it, even to the table top.
10. Remove the outlet dampener if it is to be replaced.
11. Install the replacement pump and drive, outlet dampener or pressure sensor by reversing this procedure.

    NOTE: Wetting the end of the outlet dampener will make sliding it over the sensor body easier. Make sure both cuffs are completely in the grooves.

    NOTE: Tighten the upper motor collar screw before tightening the lower screw when installing the new pump and drive.

Printed Circuit Control Board Replacement

1. Remove the two screws securing the battery pack.
2. Remove the battery pack.

---

*SNOOP is a trademark of Nupro Company

3. Remove the two screws securing the pump case.
4. Pull the connector from the pressure sensor.
5. Pull the motor electrical connector from the printed circuit board.
7. Remove and save the three screws, two washers and spacer securing the PC board to the pump face.
8. Install the replacement printed circuit board by reversing this procedure.

   NOTE: Be sure the battery connector is mounted with the black wire towards the top of the case.

Obtaining Replacement Parts

The ESCORT ELF Pump parts and part numbers are listed in TABLE 7-2. To obtain parts, service, or information in the U.S., call 1-800-MSA-2222 to find the nearest customer service center. To reach MSA International, call 1-412-967-3000.

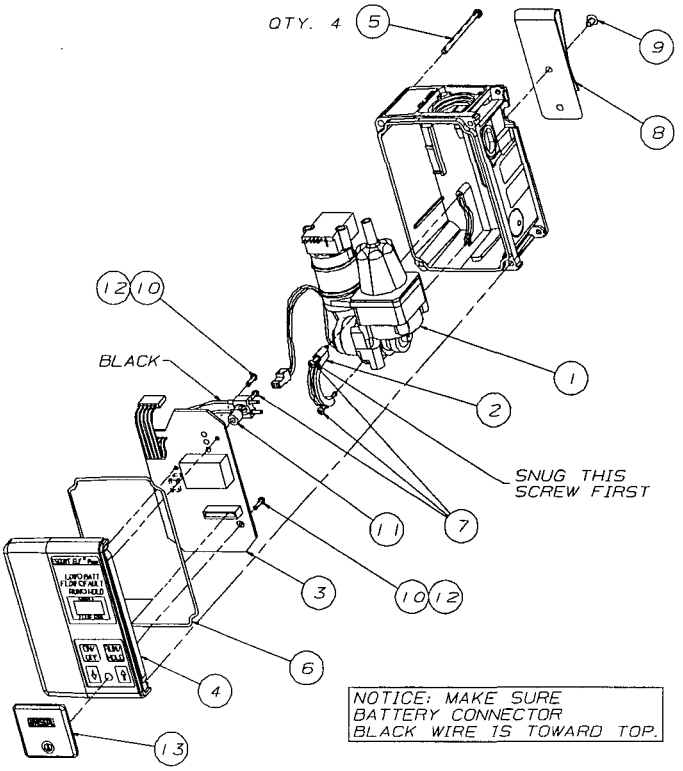

Figure 7-1. Replacement Parts

Table 7-2. Replacement Parts List

FIGURE 7-1 ITEM NO.	PART/COMPONENT	PART NO.
1	Pump and Flow Assembly, complete	804661
2	Collar	800025
3	Printed Circuit-Board Assembly	813551
4	Pump Face Assembly	813297
5	Screw	636493
6	O-ring	636602
7	Screw	636414
8	Belt Clip	636293
9	Screw	636416
10	Screw	636415
11	Spacer	628852
12	Lockwasher	64095
13	Switch Cover	802381
FIGURE 7-2 ITEM NO.	**PART/COMPONENT**	**PART NO.**
14	Pump and Drive less Pressure Sensor	805285
15	Flow Sensor Only	805286
16	Replacement Sensor Only	805284
17	Motor and Connector Assembly	805296
18	Eccentric and Bearing Assembly	805046
19	Pump Block and Valves Assembly	805360
20	Inlet Dampener	803816
21	Screws	637140
22	Outlet Dampener	804663
FIGURE 4-1	Screw	636418
	Filter Cover	497393
	O-ring	637009
	Inlet dust filter (pack of 5)	808935
	Filter, Teflon	802897
	Filter Frit	800303
FIGURE 4-2	Battery Pack (includes O-ring & Plug)	497702
	O-ring for Battery Pack	636603
	Charge Jack Plug	804158
not shown	Instruction Manual	813549
	Screwdriver	636913
	Leather Case (optional)	811741
	Upgrade Kit (includes printed circuit board and pump face assemblies)	814029

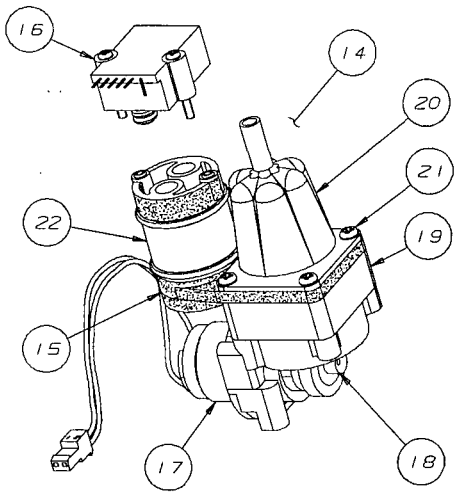

Figure 7-2. Replacement Parts (cont.)

Table 7-2. Replacement Parts List (cont.)

PART/COMPONENT	PART NO.
Kit, Pump Maintenance Parts	802922
Belt Clips	
Filter Cover	
Screws (filter cover)	
O-Rings (battery pack)	
Screws (belt clip)	
Screws (case)	
Polyethylene Discs	
O-Rings (filter cover)	
Inlet Filters	

Escort Elf® Pump

instruction manual

⚠ WARNING

THIS MANUAL MUST BE CAREFULLY READ BY ALL INDIVIDUALS WHO HAVE OR WILL HAVE THE RESPONSIBILITY FOR USING OR SERVICING THE PRODUCT. Like any piece of complex equipment, this product will perform as designed only if it is used and serviced in accordance with the manufacturer's instructions. OTHERWISE, IT COULD FAIL TO PERFORM AS DESIGNED AND PERSONS WHO RELY ON THIS PRODUCT FOR THEIR SAFETY COULD SUSTAIN SEVERE PERSONAL INJURY OR DEATH.

The warranties made by Mine Safety Appliances Company with respect to the product are voided if the product is not used and serviced in accordance with the instructions in this manual. Please protect yourself and others by following them. We encourage our customers to write or call regarding this equipment prior to use or for any additional information relative to use or repairs.

In the U.S., to contact your nearest stocking location, dial toll-free 1-800-MSA-2222.
To contact MSA International, dial 1-800-672-7777.

© Mine Safety Appliances Company 1997 - All Rights Reserved

Manufactured by
MINE SAFETY APPLIANCES COMPANY
P.O. Box 427, Pittsburgh, Pennsylvania 15230

(L) Rev 4 813549

⚠ WARNINGS

1. Do not charge the battery pack in areas that may contain a flammable mixture of combustible gases, vapors, or dust and air; otherwise, an explosion may occur because a source of ignition exists during charging.
2. Do not operate the pump in oxygen-enriched atmospheres (more than 21% oxygen) containing combustible gases, vapors, or other materials. Fire or explosion can result from operating in these atmospheres.
3. Operate the pump with MSA p/n 497702 battery pack only. Do not use other batteries or power sources.
4. When using the pump in a hazardous area (with respect to fire or explosion) as specified in the National Electric Code (NEC) Article 500 - Hazardous (Classified) Locations, the pump must be labeled stating that it meets the design criteria of the specific Class, Division and Group. Users must operate the pump in accordance with the instructions for that Class, Division, and Group. A copy of the NEC Code can be obtained from the National Fire Protection Association, Batterymarch Park, Quincy, MA 02269.
5. Use only genuine MSA replacement parts when performing maintenance procedures described in this manual; failure to do so may seriously impair the ESCORT ELF Pump performance. Repair or alteration beyond the scope of these maintenance instructions or by anyone other than authorized MSA service personnel could cause the product to fail to perform as designed, and persons who rely on this product for their safety could sustain severe personal injury or death.

FAILURE TO COMPLY WITH THE ABOVE WARNINGS CAN RESULT IN SERIOUS PERSONAL INJURY OR DEATH

⚠ CAUTIONS

1. Do not use the pump with organic fluids in an impinger without an absorber trap; otherwise, the pump will be damaged.
2. Use only an MSA Omega (Ω) Charger to charge the pump.
3. If, after thoroughly reading this manual, you are uncertain of the installation, operation, or maintenance procedures, call 1-800-MSA-2222 for assistance.

Table of Contents

Section 1
General Information **1-1**

Introduction 1-1
Operating Specifications 1-2

Section 2
Theory of Operation **2-1**

Introduction 2-1
Functional Description of Operation 2-1
Figure 2-1. Flow-Feedback Control System 2-2
LED Indicator Operation 2-3

Section 3
Operation **3-1**

Charging the Battery Pack 3-1
⚠ WARNING 3-1
⚠ CAUTION 3-1
Operating Time 3-1
Personal/Area Sampling 3-2
Figure 3-1. Typical Operating Time Graph 3-2
Operating the Pump 3-3

Section 4
Routine Maintenance **4-1**

Periodic Maintenance 4-1
Checking the Inlet Filter 4-1
Figure 4-1. Checking the Inlet Filter 4-1
Filter Replacement 4-2
Frit Replacement 4-2
Battery Pack Replacement 4-2
Figure 4-2. Replacing the Battery Pack 4-3

Section 5
ELF Sensor Calibration **5-1**

Section 6
ELF Sensor Calibration
for Pumps used in the U.S. Government Mine Safety and Health Administration (MSHA) Coal Mine Dust Sampling Program **6-1**

Section 7
Repairs and Replacement Parts **7-1**

Troubleshooting 7-1
⚠ WARNING 7-1
Corrective Maintenance 7-1
Table 7-1. Troubleshooting Guidelines 7-2
Unplugging the Electrical Connectors 7-3
Reattaching the Electrical Connectors 7-3
Pump & Drive Assembly, Outlet Dampener, or Pressure Sensor Replacement 7-4
Printed Circuit Control Board Replacement 7-4
Obtaining Replacement Parts 7-5
Figure 7-1. Replacement Parts 7-6
Table 7-2. Replacement Parts List 7-7
Figure 7-2. Replacement Parts (cont.) 7-8

Section 1
General Information

Introduction

The ESCORT ELF Pump introduces a totally new, patented concept of flow control and flow readout (U.S. Patent 5,295,790). The heart of this new system is the electronic laminar flow sensor. The ELF sensor combines a laminar flow element and a differential pressure sensor to measure sample volume flow rate. This measure of flow rate is not affected by changes in sample loading or the other factors that affect rotameter-type indicators used in other pumps. The ELF sensor provides an electronic signal which is linearly related to flow rate. This signal is used in the pump control circuit to maintain the chosen flow rate constant to within ±2.5% and is used in the readout circuit to allow the digital display of the actual flow rate to within ±0.1 liters per minute (LPM).

The ESCORT ELF sensor and control circuitry are very stable both in storage and use. Together they form a secondary standard to maintain the calibration accuracy for at least 200 hours of pump usage. A built-in operating time totalizer helps remind the user of the total operating hours since the last calibration check was performed against a primary flow standard. This totalizer automatically resets to 0 when a calibration is performed. If the pump is used in the coal mine dust sampling program, these calibration checks should be done after each 200 hours of use. If the pump is used for OSHA compliance sampling, the recalibration should be performed monthly.

Operating Specifications	
ELECTRICAL CHARACTERISTICS	
POWER SUPPLY	4.8-volt battery pack of four nickel-cadmium cells
BATTERY PACK CAPACITY	1.8 ampere hour
BATTERY PACK RECHARGE TIME	14-16 hours (overnight) with recommended chargers
CHARGING TEMPERATURE	10° to 30°C (50° to 86°F)
TYPICAL BATTERY PACK LIFE	300 or more charging cycles
OPERATING AND PHYSICAL CHARACTERISTICS	
FLOW CONTROL	Volumetric flow rate is controlled at the set-point with automatic compensation for battery voltage, altitude, temperature, and sample load changes
OPERATING RANGE	0.5 TO 3.0 LPM
	5 to 30 inches water load up to 1.0 LPM; up to 30 inches of water load up to 2.0 LPM; up to 20 inches of water load up to 2.5 LPM; and up to 10 inches of water load up to 3.0 LPM
FLOW BLOCKAGE DETECTION	When flow is blocked the FLOW FAULT LED indicator lights and stays lighted until the cause of flow blockage is removed. If blocked for longer than 1.5 minutes, the pump shuts down. Pumps that are ordered for coal mine dust sampling are factory-programmed to *not* shut down
FLOW READOUT	Liquid crystal digital display with 0.01 LPM resolution from 0.5 to 3.0 LPM
	Accuracy ±2.5% from 1.0 to 3.0 LPM, 0° to 45°C ±5% from 1.0 to 3.0 LPM, -20° to 0°C and 45° to 65°C ±5% from 0.5 to 0.9 LPM, 0° to 45°C

Operating Specifications	
ELAPSED TIME READOUT	Quartz controlled timer reads out to 999 minutes in 1-minute steps. Holds last reading after either flow fault or low battery shut-down, and when pump is OFF or in HOLD mode; resets to zero automatically when pump is turned ON. Timer does not count time when FLOW FAULT LED is lighted.
SCHEDULED CALIBRATION	The pump has an operating hours totalizer to help remind user of the need for periodic calibration checks.
OPERATING TIME	Varies with flow rate, sampling device loading and temperature. Minimum eight-hour operation at 2.5 LPM with 20-inch water load. (See FIGURE 3-1.)
LOW BATTERY FUNCTION	The pump shuts down and lights the LOW BATT LED when battery voltage drops below 4.1 volts
TEMPERATURE COMPENSATION	0° to 45°C (32° to 113°F) $\pm$2.5% accuracy -20° to 0°C and 45° to 65°C (-4° to $+149^\circ$F and 112° to 148°F) $\pm$5.0% accuracy
ALTITUDE COMPENSATION	Below sea-level to at least 10,000 ft.
DIMENSIONS	2 inches deep x 4 inches high x 3-7/8 inches wide (5.1 centimeters deep x 10.3 centimeters high x 9.8 centimeters wide)
WEIGHT	19 oz. (550 grams)
CASE	Case plastic is electrically conductive to reduce radio frequency interference; an optional leather case is available for pump protection during rough usage such as underground mining or construction and demolition work areas
SERIAL NUMBER IDENTIFICATION	Located on the side of the case under the battery pack (include number in correspondence with MSA)

Section 2
Theory of Operation

Introduction

This section describes the operation of the sample flow control and readout circuitry of the ESCORT ELF Pump.

Functional Description of Operation

The ESCORT ELF Pump contains a rechargeable battery pack, a motor-driven pump, the ELF sensor, and the electronic circuit to control and display the flow rate.

The battery pack consists of four nickel-cadmium cells. The cells are connected in series with a current limiting resistor to allow use in hazardous atmospheres (see "Warnings"). The pack also has a PTC resistor which functions as a self-resetting circuit breaker to prevent damage to the pack if the output terminals are accidentally shorted.

The motor-driven pump consists of an inlet pulsation dampener, a diaphragm pump, and silicone rubber inlet and exhaust valves. The diaphragm is driven by the motor to make one pump stroke with each revolution. The pulsation dampener acts as an elastic storage chamber to smooth the individual pump pulses to minimize their effect on the sampling devices connected to the pump inlet.

The ELF sensor consists of a laminar flow element and a pressure sensor. All of the air flow through the pump passes from the exhaust port of the pump and through the laminar flow element. The element is a hollow cylinder of porous stainless steel. The air flowing through the narrow passages in the cylinder produces an air pressure difference between the outer and inner walls of the cylinder. This difference is

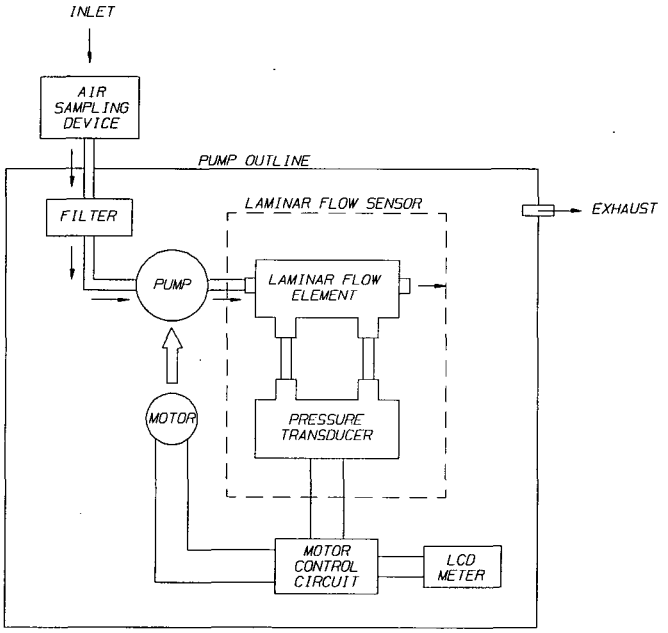

Figure 2-1. Flow-Feedback Control System

monitored by connections to the high and low pressure taps of a sensitive differential pressure sensor. The electrical signal from the sensor is a linear voltage, which is directly related to the air flow through the laminar element. This signal is compared to the flow set point in the electronic circuit and is used to control the flow at the set point. Any deviation in flow rate is sensed

and the motor power is adjusted to maintain the preset flow rate. In the case of a blocked flow or operation beyond the pump capacity where the flow cannot be brought to within ±0.1 LPM of the set point, the flow fault LED will be lighted.

LED Indicator Operation

- The RUN/HOLD LED assures the user that the unit is operating, even in poorly lit, noisy environments.
- The RUN/HOLD LED also indicates the HOLD function. If the pump is switched to HOLD, the pump shuts down, the timer stops, and the LED is switched to a blinking mode. When the RUN/HOLD switch is pressed again, the pump will restart and the timer will continue from its "hold" value.
- The LOW BATT LED indicates operation of the low battery detection circuit. When the battery pack drops to 4.1 volts, the circuit causes the pump to shut down, the timer to stop, and the LOW BATT LED to light. This limits further battery drain to just a few milliamperes, which, in turn, helps prevent deep discharging and battery pack damage upon recharging. It also helps prevent the invalidation of the sample being taken, because the timer stores the actual sample time and the flow rate is controlled up to the time of shut-down.
- The FLOW FAULT LED indicates operation of the flow blockage detection circuit. If the sample inlet (or the sampling device connected to the pump) is blocked, the FLOW FAULT LED lights until the cause of the flow fault is removed.
- The pump is normally factory-programmed so that a fault longer than 1.5 minutes will shut down the pump. The pump may be restarted from a flow fault shutdown by pressing the RUN/ HOLD switch. Restarting in this manner allows continuation of the sample period without having the timer reset to zero.
- The Flow Fault LED is lighted whenever the pump flow rate is more than ±0.1 LPM different from the set-point. It is normal for it to be lighted briefly while the pump is started or when a new set-point is selected.

Section 3
Operation

Charging the Battery Pack

Use any Omega™ charger (for example: P/N 494716, 495965, 800525 or 801759) for charging the battery pack. Remove the protective rubber plug and charge the battery pack for 14 to 16 hours. (Note that charging for longer periods will not reduce battery life, provided the charging is performed at room temperature.) The battery pack can be charged with the pack removed from the pump. Always replace the rubber plug after charging and before using the pump to prevent water entry into the jack.

⚠ WARNING

Do not charge the battery pack in areas that may contain a flammable mixture of combustible gases, vapors, or dust and air; otherwise, an explosion may occur because a source of ignition exists during charging.

⚠ CAUTION

Use only an MSA Omega (Ω) charger from MSA to charge the pump.

Operating Time

The maximum expected operating time for a pump with a fully charged battery pack depends on:

1. The selected flow rate.
2. The vacuum load imposed by the sampling device.
3. The temperature.
4. The age of the battery pack.

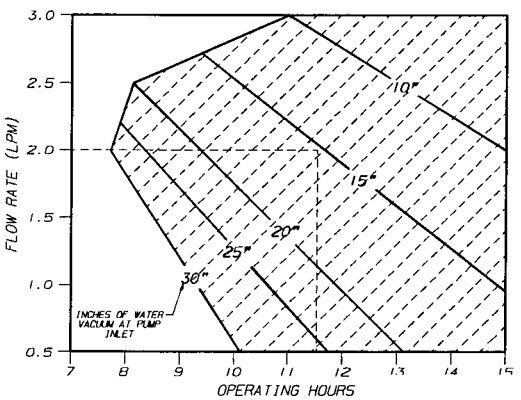

Figure 3-1. Typical Operating Time Graph

See FIGURE 3-1 for approximate operating times. The shaded area shows operating loads and flow rates within the pump specifications. The example shown with dashed lines is for a pump set for 2.0 LPM with a sampling load of 15"; the expected maximum operating time would be 11.5 hours. This figure is based on room temperature operation with a new pack. At 0 degrees Centigrade, the operating time will be reduced by 10%, 20% at -20oC. After several hundred charge/discharge cycles, the pack capacity may be reduced by 20%.

Personal / Area Sampling

The ESCORT ELF Pump is designed for either personal or area sampling of ambient air. It automatically provides a constant volumetric flow rate of the sample air through the sampling device (filter disc, impinger, or absorbent tube) to measure the concentration of airborne mists, dusts, particulates, gases, and vapors in the workplace.

Operating the Pump

1. Charge the battery pack for 16 hours using the MSA Omega (Ω) Charger.
   - Read the WARNING on the battery pack.
2. Connect the desired sampling device to the inlet fitting.
3. Press ON/OFF button until the RUN/HOLD LED lights.
   - The Flow Fault and Low Bat LEDs will then light. During the time these LEDs are being lighted, a number from 0 to 999 will be displayed. This is the total of the pump's operating hours since its last calibration.
   - When all three LEDs are lighted, the display changes to **8.88 LPM/MINS**, to show all segments are functional.
   - The pump will then begin operation. The LOW BAT LED will be dark if the battery voltage is above 4.1 volts. The Flow Fault LED will be dark when the flow rate is within 0.1 LPM of the setpoint.
4. Use the ↑ and ↓ switch buttons to adjust the flow setpoint if a new flow rate is desired. When either button is pressed:
   - RUN/HOLD LED will be dark
   - Display will show the flow setpoint being stepped up or stepped down to the new setpoint.
5. The RUN/HOLD button may be pressed to interrupt sampling without causing the timer to reset to zero.
6. Press the ON/OFF button at the end of sampling.
   - Total sample minutes will be on the display and will remain until the pump is turned ON again.
7. Check calibration monthly (every 200 hours of use for coal mine dust sampling).
8. Operate the pump with a sampling device connected to the inlet. Operation without a sampler attached will reduce the life of the pump inlet filter. Operation at very low flow rates may be unstable without an attached sampling device, such as a charcoal tube.

Section 4
Routine Maintenance

Periodic Maintenance

Checking the Inlet Filter

The pump inlet contains dust and water filters to protect the pump from particles and water in the sample air (FIGURE 4-1). If the filters become clogged, the sample flow may be blocked or an extra load placed on the pump; therefore, check the filters regularly.

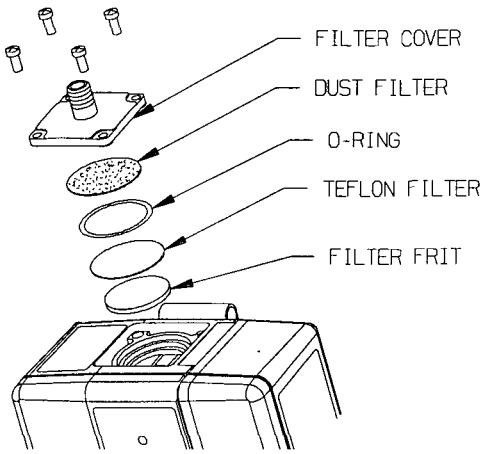

Figure 4-1. Checking the Inlet Filter

The frequency of the checks should depend on the amount of pump usage and the concentration of particles allowed to enter the pump. Usually, only the dust filter needs to be replaced. The Teflon* water filter should rarely need to be replaced. The water filter is very fragile and must be handled with care. Even a tiny pin hole will destroy its function. The filter frit should never need to be replaced if the other filters are maintained.

Filter Replacement

1. Remove the four screws holding the filter cover and O-ring.
2. Replace the filter with a new one.
3. Re-assemble the O-ring and cover.

Frit Replacement

1. Stab the frit center with a small screwdriver, and lift it out.
2. Press in a new frit.
3. Re-assemble the Teflon and dust filters, O-ring, and cover.

Battery Pack Replacement

(FIGURE 4-2 illustrates the battery pack.)

1. Remove the two screws securing the battery pack to the case.
2. Separate the pack from the case.
3. Make sure that the O-ring is in place on the replacement pack. Then, slide the pack into the pump case while pressing the case front and back to make sure the case edges go inside the edges of the pack.
4. Insert the two screws and tighten.

* Teflon is a trademark of the du Pont Company

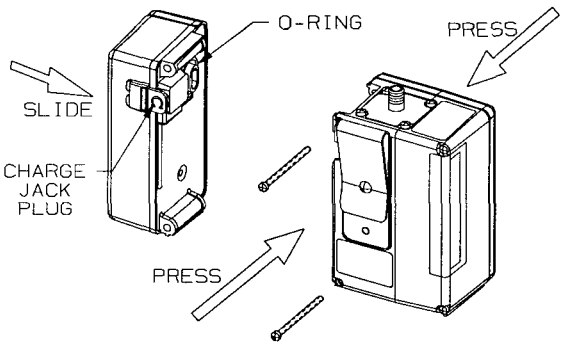

Figure 4-2. Replacing the Battery Pack

Section 5
ELF Sensor Calibration

1. Check pump inlet filter for dust; replace if heavily loaded.
2. Turn ON the pump and allow it to reach its flow rate setting.
3. If the pump is not set for 2.50 LPM, set it to 2.50.
4. Allow the pump to operate for 10 to 15 minutes at 2.50 LPM. To check for leaks, temporarily block the pump inlet; 0.02 LPM or less should be displayed. If not, check the inlet filter cover and o-ring for correct assembly.
5. Leave the pump set for 2.50 LPM and turn OFF the pump.
6. Connect a primary calibration standard to the pump.
7. Turn ON the pump; as the pump goes through its self-check sequence, press and hold the ON/OFF and RUN/HOLD switches simultaneously until the display reads CAL. Immediately release both buttons.

   NOTE: Failure to release both buttons will turn OFF the pump.

   - The display will show CAL and a countdown sequence of numbers from 9 through 0; thereafter, it will alternately display CAL and 2.50 LPM.
8. Operate the calibration standard and obtain at least six readings which are very close to one another.
9. Use the ↑ and ↓ switch buttons to step the pump display up or down until it agrees exactly with the average of the six readings.
10. Turn OFF the pump; the ELF sensor is now calibrated. Repeat monthly or every 200 hours of use.
11. When you next turn ON the pump, the operating hours will be reset to **0** and be displayed during the lighting of the FLOW FAULT and LOW BAT LEDs.

The BIOS DryCal should be used to calibrate or check the flow rate of an MSA Escort ELF pump only if an isolating flow restrictor (e.g., a filter or an orifice such as P/N 632646) providing at least 10" WC is placed in line between the pump and the calibrator. Failure to use such an isolation technique can cause a calibration inaccuracy on the order of 2% and is not recommended.

Section 6 ELF Sensor Calibration for Pumps used in the U.S. Government Mine Safety and Health Administration (MSHA) Coal Mine Dust Sampling Program

1. Check pump inlet filter for dust; replace if heavily loaded.
2. Turn ON the pump and allow it to reach its flow rate setting.
3. If the pump is not set for 2.00 LPM, set it to 2.00.
4. Allow the pump to operate for 10 to 15 minutes at 2.00 LPM. To check for leaks, temporarily block the pump inlet; 0.02 LPM or less should be displayed. If not, check the inlet filter cover and o-ring for correct assembly.
5. Leave the pump set for 2.00 LPM and turn OFF the pump.
6. Connect a primary calibration standard to the pump.
7. Turn ON the pump; as the pump goes through its self-check sequence, press and hold the ON/OFF and RUN/HOLD switches simultaneously until the display reads CAL. Immediately release both buttons.

   NOTE: Failure to release both buttons will turn OFF the pump.

   - The display will show CAL and a countdown sequence of numbers from 9 through 0; thereafter, it will alternately display CAL and 2.00 LPM.
8. Operate the calibration standard and obtain at least six readings which are very close to one another.

9. Use the ↑ and ↓ switch buttons to step the pump display up or down until it agrees exactly with the average of the six readings.
10. Turn OFF the pump; the ELF sensor is now calibrated. Repeat every 200 hours of use .
11. When you next turn ON the pump, the operating hours will be reset to **0** and will be displayed during the lighting of the FLOW FAULT and LOW BAT LEDs.

Section 7
Repairs and Replacement Parts

Troubleshooting

TABLE 7-1, "Troubleshooting Guidelines," lists the symptoms of the most common problems; it also lists their probable cause(s) and the action required to correct each problem. Use the guidelines if you cannot calibrate the ESCORT ELF Pump or if the pump does not operate properly. If you cannot resolve a problem by using the guidelines, call 1-800-MSA-2222 to locate a local MSA Repair Center.

⚠ WARNING

Use only genuine MSA replacement parts when performing the maintenance procedures described in this manual. Failure to do so may seriously impair instrument performance. Repair or alteration beyond the scope of these maintenance instructions or by anyone other than an MSA-trained service person could cause the product to fail to perform as designed, and persons who rely on this product for their safety could sustain severe personal injury or death.

Corrective Maintenance

When an inoperative part is located by using TABLE 7-1, Troubleshooting Guidelines, replace it according to one of the replacement procedures later in this section. Also refer to "Obtaining Replacement Parts" later in this section for information on how to order the necessary part from MSA.

Table 7-1. Troubleshooting Guidelines

SYMPTOM	PROBABLE CAUSE	CORRECTIVE ACTION
ON/HOLD LED indicator turns OFF prematurely; FLOW FAULT LED Indicator may be ON or OFF and LOW BATT LED is turned ON	1. Inlet filter clogged or blocked with water	1. Replace filter according to "Checking the Inlet Filter"
	2. Battery pack is degraded	2. Install new pack on pump by performing procedure described under "Battery Pack Replacement"
	3. Operation beyond flow and load limits	3. Reduce flow or replace sampler with lower load device
ON/HOLD LED and FLOW FAULT LED indicators turned ON, and pump will not run or, if it does run, no flow is displayed on readout	1. Pump motor connector improperly plugged into PC board	1. Check connector
	2. Pressure sensor connector fault	2. Check connector. Verify five pins are plugged in
	3. Pump motor inoperative	3. Replace pump and motor drive assembly according to procedure under "Replacing the Pump and Drive Assembly"
	4. Pressure sensor or PC board inoperative	4. Replace sensor or PC board
When inlet is blocked, the flow indication is not 0.02 lpm or less	1. Sample flow leaks	1. Check for leaking tube connection or O-ring seal at the inlet filter cover
LED indicator on charger does not turn ON when plug on-line cord is inserted in 115 VAC outlet and plug on charging cord is inserted in jack on battery pack	1. Power source inactive	1. Check and correct cause of power loss
	2. Charger failure	2. Replace charger
	3. Battery pack failure	3. Replace battery pack by performing procedure under "Replacing the Battery Pack"
Desired flow rate cannot be obtained under heavy sampling device loads within regime of FIGURE 3-1	1. Inlet filter partially clogged	1. Replace filter according to instructions under "Checking the Inlet Filter"
	2. Leak exists in sample flow system	2. Check for leaking tube connection or O-ring at the inlet filter cover

Unplugging the Electrical Connectors

Service procedures which require opening the ELF pump case require the unplugging of two electrical connectors:

1. Pull on the motor electrical connector to remove the motor wires from the printed circuit board.
2. Pull on the 5-pin ribbon cable to remove the connector from the ELF sensor.

Reattaching the Electrical Connectors

1. When reattaching the motor connector, make sure the angular ramp at the end faces towards the latch projecting from the printed circuit board socket.

   NOTE: The pump will operate with the connector installed the other way, but the above method is encouraged because the ramp and latch help keep the connector attached as the pump is knocked around during use.

2. When reattaching the connector to the ELF sensor, make sure pins #1 through #5 are straight and in line.

   NOTE: If these pins are bent, use needle-nose pliers to straighten and align them. Pin #6 is intentionally cut off because it is not used in the ELF pump.

3. Pull the cable so that the end of the connector is about 7/8" above the printed circuit board.
4. Hold the pump face in the right hand and position your thumb and forefinger around the top left hand corner of the pump face.
5. Hold the connector with these two fingers and hold the pump case with the left hand.
6. Position the connector so that an end pin is just inside the funnel opening of the corresponding pin socket.
7. Gradually tilt the connector to get the next pin just inside its socket, and repeat this process until all five pins are just inside their corresponding sockets.
8. Slowly press the connector onto the pins until they "bottom out."

9. Inspect the connector at the top and bottom to make sure all pins are correctly inserted.

Pump & Drive Assembly, Outlet Dampener, or Pressure Sensor Replacement

1. Remove two screws securing the battery pack to the case.
2. Remove the battery pack.
3. Remove the two screws securing the pump case.
4. Pull the 5-pin ribbon connector from the pressure sensor.
5. Pull the motor electrical connector from the PC board.
6. Remove the two screws securing the pump mounting collar to the back of the case.
7. Lift out the pump and drive while removing the inlet dampener connection from the fitting.

   NOTE: A drop of soap solution (SNOOP*) "worked in" at the end of the rubber tube makes removal easier and will prevent tearing the rubber tube.
8. Remove the two screws securing the pressure sensor.
9. Remove the pressure sensor and be careful not to drop it, even to the table top.
10. Remove the outlet dampener if it is to be replaced.
11. Install the replacement pump and drive, outlet dampener or pressure sensor by reversing this procedure.

    NOTE: Wetting the end of the outlet dampener will make sliding it over the sensor body easier. Make sure both cuffs are completely in the grooves.

    NOTE: Tighten the upper motor collar screw before tightening the lower screw when installing the new pump and drive.

Printed Circuit Control Board Replacement

1. Remove the two screws securing the battery pack.
2. Remove the battery pack.

---

*SNOOP is a trademark of Nupro Company

3. Remove the two screws securing the pump case.
4. Pull the connector from the pressure sensor.
5. Pull the motor electrical connector from the printed circuit board.
7. Remove and save the three screws, two washers and spacer securing the PC board to the pump face.
8. Install the replacement printed circuit board by reversing this procedure.

   NOTE: Be sure the battery connector is mounted with the black wire towards the top of the case.

Obtaining Replacement Parts

The ESCORT ELF Pump parts and part numbers are listed in TABLE 7-2. To obtain parts, service, or information in the U.S., call 1-800-MSA-2222 to find the nearest customer service center. To reach MSA International, call 1-412-967-3000.

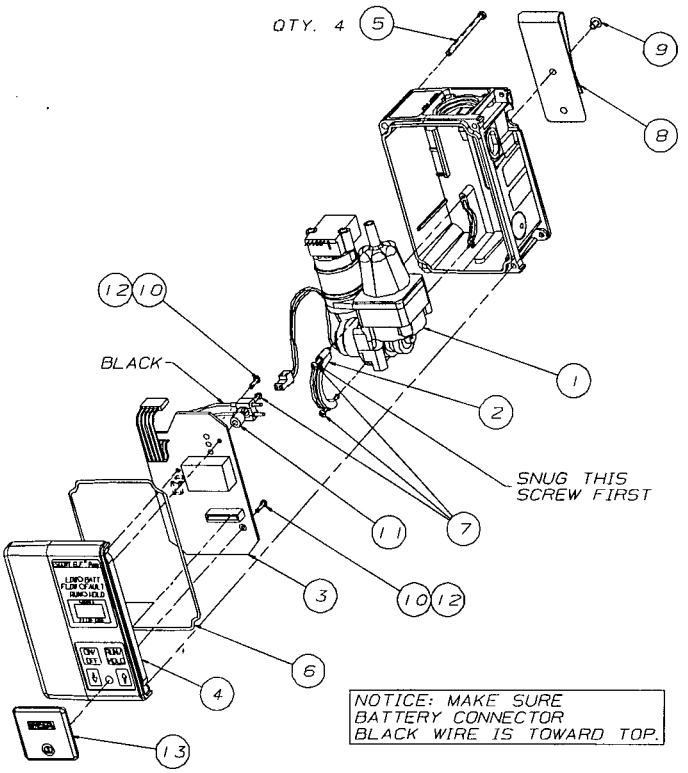

Figure 7-1. Replacement Parts

Table 7-2. Replacement Parts List

FIGURE 7-1 ITEM NO.	PART/COMPONENT	PART NO.
1	Pump and Flow Assembly, complete	804661
2	Collar	800025
3	Printed Circuit-Board Assembly	813551
4	Pump Face Assembly	813297
5	Screw	636493
6	O-ring	636602
7	Screw	636414
8	Belt Clip	636293
9	Screw	636416
10	Screw	636415
11	Spacer	628852
12	Lockwasher	64095
13	Switch Cover	802381
FIGURE 7-2 ITEM NO.	**PART/COMPONENT**	**PART NO.**
14	Pump and Drive less Pressure Sensor	805285
15	Flow Sensor Only	805286
16	Replacement Sensor Only	805284
17	Motor and Connector Assembly	805296
18	Eccentric and Bearing Assembly	805046
19	Pump Block and Valves Assembly	805360
20	Inlet Dampener	803816
21	Screws	637140
22	Outlet Dampener	804663
FIGURE 4-1	Screw	636418
	Filter Cover	497393
	O-ring	637009
	Inlet dust filter (pack of 5)	808935
	Filter, Teflon	802897
	Filter Frit	800303
FIGURE 4-2	Battery Pack (includes O-ring & Plug)	497702
	O-ring for Battery Pack	636603
	Charge Jack Plug	804158
not shown	Instruction Manual	813549
	Screwdriver	636913
	Leather Case (optional)	811741
	Upgrade Kit (includes printed circuit board and pump face assemblies)	814029

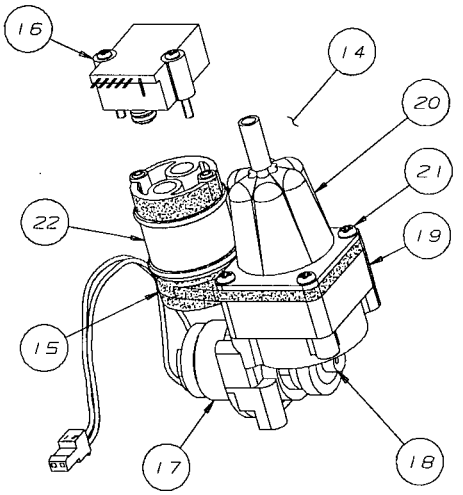

Figure 7-2. Replacement Parts (cont.)

Table 7-2. Replacement Parts List (cont.)

PART/COMPONENT	PART NO.
Kit, Pump Maintenance Parts	802922
Belt Clips	
Filter Cover	
Screws (filter cover)	
O-Rings (battery pack)	
Screws (belt clip)	
Screws (case)	
Polyethylene Discs	
O-Rings (filter cover)	
Inlet Filters	