CHAPTER 8: ELECTRIC POWER
TABLE OF CONTENTS

CHAPTER 8 ELECTRIC POWER 8.1-1

8.1 INTRODUCTION 8.1-1
8.1.1 UTILITY GRID DESCRIPTION 8.1-1
8.1.4.3 Design Criteria, Regulatory Guides, and IEEE Standards 8.1-1
8.2 OFFSITE POWER SYSTEM 8.2-1
8.2.1 SYSTEM DESCRIPTION 8.2-1
8.2.1.1 Transmission Switchyard 8.2-2
8.2.1.2 Transformer Area 8.2-7
8.2.1.3 Switchyard Control Building 8.2-8
8.2.1.4 Switchyard and Transmission Line Testing and Inspection 8.2-9
8.2.2 GRID STABILITY 8.2-9
8.2.5 COMBINED LICENSE INFORMATION FOR OFFSITE ELECTRICAL POWER 8.2-12
8.3 ONSITE POWER SYSTEMS 8.3-1
8.3.1.4 Inspection and Testing 8.3-3
8.3.3 COMBINED LICENSE INFORMATION FOR ONSITE ELECTRICAL POWER 8.3-4
8.3.4 REFERENCES 8.3-4

CHAPTER 8 LIST OF TABLES

Number	Title
8.1-201	Site-Specific Guidelines for Electric Power Systems

CHAPTER 8 LIST OF FIGURES

Number	Title
8.2-201	Offsite Power System One-Line Diagram
8.2-202	Switchyard General Arrangement

CHAPTER 8 ELECTRIC POWER

8.1 INTRODUCTION

This section of the referenced DCD is incorporated by reference with the following departures and/or supplements.

8.1.1 UTILITY GRID DESCRIPTION

PTN SUP 8.1-1 Replace the existing information in DCD Subsection 8.1.1 with the following:

FPL owns and operates the power transmission system for Turkey Point Units 6 & 7. FPL is the largest investor-owned electric utility in Florida, serving more than 4.4 million customers. The FPL power transmission system consists of transmission lines and substations that link the various generation facilities, load centers, and grid interties within the FPL service territory at various voltages ranging from 69 kV to 500 kV. FPL maintains multiple direct interconnections with neighboring utilities. FPL also participates as a member of the Florida Reliability Coordinating Council and the North American Electric Reliability Corporation.

The plant switchyard (Clear Sky substation) on the Turkey Point plant area is used to transmit the electric power output from Units 6 & 7 to the FPL transmission system. The switchyard also serves as the units' preferred and maintenance source. The switchyard has two sections. The nominal operating voltage of these sections is 230 kV and 500 kV. These sections are interconnected with 230 kV/ 500 kV autotransformers. The 230 kV section of the plant switchyard is configured in a breaker-and-a-half bus arrangement, whereas the configuration of the 500 kV section of the switchyard is a double-breaker and a double-bus arrangement. The transmission system is connected to the Clear Sky substation through two 500 kV and two 230 kV transmission lines. Additionally, there is a 230 kV tie-line between the Clear Sky substation and the Turkey Point substation.

8.1.4.3 Design Criteria, Regulatory Guides, and IEEE Standards

---

PTN SUP 8.1-2 Add the following information between the second and third paragraph of this subsection.

Offsite and onsite ac power systems' conformance to RGs and IEEE standards identified by DCD Table 8.1-1 as site-specific and to other applicable RGs is as indicated in Table 8.1-201.

PTN SUP 8.1-2

Table 8.1-201
Site-Specific Guidelines for Electric Power Systems

Criteria				Applicability (FSAR[a] Section/Subsection)			Remarks
				8.2	8.3.1	8.3.2	
1.	Regulatory Guides						
	a.	RG 1.129	Maintenance, Testing, and Replacement of Vented Lead Acid Storage Batteries for Nuclear Power Plants			G	Battery service tests are performed in accordance with the RG.
	b.	RG 1.155	Station Blackout				Not applicable[b]
	c.	RG 1.204	Guidelines for Lightning Protection of Nuclear Power Plants	G	G		Implemented via IEEE-665, *IEEE Guide for Generating Station Grounding*
	d.	RG 1.206	Combined License Applications for Nuclear Power Plants (light water reactor edition)	G	G	G	
2.	Branch Technical Positions						
	a.	BTP 8-3 (BTP ICSB-11 in DCD)	Stability of Offsite Power Systems	G			Stability Analysis of the Offsite Power System is performed in accordance with the BTP.

(a) "G" denotes guidelines as defined in NUREG-0800, Table 8-1 (SRP). No Letter denotes "Not applicable."
(b) Station Blackout and the associated guidelines were addressed as a design issue in the DCD.

8.2 OFFSITE POWER SYSTEM

This section of the referenced DCD is incorporated by reference with the following departure(s) and/or supplement(s).

8.2.1 SYSTEM DESCRIPTION

Delete the first, second, and sixth paragraphs and the first and last sentences of the fourth paragraph, of DCD Subsection 8.2.1. Add the following information before the fifth paragraph of DCD Subsection 8.2.1.

PTN COL 8.2-1 The offsite power system for Turkey Point Units 6 & 7 has four transmission lines from the FPL transmission network to the plant switchyard (Clear Sky substation) from three physically independent substations. The plant switchyard also includes a normally open supply circuit from the existing Turkey Point substation serving Turkey Point Units 1 through 5. This circuit provides an emergency source for offsite power from Turkey Point substation in the event of loss of power in all four transmission circuits to the plant switchyard.

The plant switchyard has two operating voltages with autotransformers interconnecting the 500 kV and 230 kV sections. The Units 6 & 7 main step-up transformers (GSU) and reserve auxiliary transformers (RAT) are connected at 230 kV to the plant switchyard. The interconnection of Units 6 & 7, the switchyard, and the 230 kV and 500 kV transmission systems is shown on Figure 8.2-201 and Figure 8.2-202.

There are two independent 500 kV transmission lines connected to the plant switchyard, and two independent 230 kV transmission lines. As shown below, each transmission line is tied into an FPL substation located between 19 and 52 miles from the plant. There is a 230 kV tie-line between the plant switchyard and the Turkey Point substation which is within the Turkey Point plant property.

Nominal Voltage (kV)	Termination Point	Length (miles)	Thermal Rating (MVA)
500	Levee 500 kV	43	3464
500	Levee 500 kV	43	3464
230	Davis 230 kV	19	1191
230	Pennsuco 230 kV	52	1191
230	Turkey Point (normally open)	0.5	1191

The transmission lines are divided into two separate transmission corridors. They enter the common switchyard from different directions and are maintained in separate rights-of-way. The two 500 kV lines and the Pennsuco 230 kV line are in the west transmission corridor and the Davis 230 kV line and the 230 kV line to Turkey Point substation are in the east transmission corridor.

The transmission lines are designed to meet all requirements of NESC C2-2007, “National Electrical Safety Code” (Reference 201). Transmission line structures and support structures and systems are designed to the loading requirements of the NESC and FPL standards. The transmission lines are designed with a basic insulation level (BIL) that will minimize flashovers caused by lightning.

Galloping conductors are not anticipated.

PTN CDI

A transformer area containing the main step-up transformer, the unit auxiliary transformers, and reserve auxiliary transformers is located next to each turbine building.

8.2.1.1 Transmission Switchyard

Replace the information in DCD Subsection 8.2.1.1 with the following information.

PTN COL 8.2-1

The 500 kV section of the plant switchyard is configured in a double-breaker and double-bus arrangement to make two circuits for connecting two transmission lines. Each 500 kV bus is connected to one 230 kV bus by separate 1500 megavolt ampere (MVA) autotransformers. High-side and low-side bank breakers are provided for the autotransformers. All breakers are in the closed position and

energized under normal operation. The 500 kV switchyard is rated for a continuous current of 4000A and a fault duty rating of 50 kiloamperes.

The 230 kV section of the plant switchyard is configured in a breaker-and-a-half bus arrangement. The switchyard provides the separate electrical circuits needed for connecting the 230 kV lines from the transmission grid and for connecting the Units 6 & 7 main step-up transformers and reserve auxiliary transformers. All breakers are in the closed position and energized under normal operation. The 230 kV switchyard is rated for a fault duty rating of 63 kiloamperes. The continuous current rating of the main buses and autotransformer circuit breakers is 4000A. The continuous current rating of the buses and circuit breakers in the tie-sections between the main buses is 4000A.

The plant switchyard includes one terminal for the Unit 6 main step-up transformer connection, one terminal for the Unit 7 main step-up transformer connection, two terminals for connections to the Unit 6 reserve auxiliary transformers, and two terminals for connections to the Unit 7 reserve auxiliary transformers.

Underground conductors are used to connect the main step-up and reserve auxiliary transformers to the switchyard. The conductors for each transformer are routed separately and are protected by reinforced concrete enclosures.

The configuration of the switchyard is shown in Figure 8.2-202.

The switchyard includes surge protective devices, grounding and a lightning protection system in accordance with standard industry practice.

Failure Modes and Effects Analysis

PTN SUP 8.2-1

The design of the offsite power system provides for a robust system that supports reliable power production. While offsite power is not required to meet any safety function, multiple, reliable transmission circuits are provided to support operation of the Units 6 & 7 facilities. Neither the accident analysis nor the probabilistic risk assessment has identified the nonsafety-related offsite power system as risk significant for normal plant operation.

The offsite power system for Units 6 & 7 has four transmission lines from the FPL transmission network to the plant substation from three physically independent substations. No single transmission line is designated as the preferred circuit for Unit 6 or for Unit 7. Each of the transmission lines has sufficient capacity and capability from the transmission network to power the plant loads for both units

under normal, abnormal and accident conditions. Each 230 kV bus is split into two sections by a bus breaker to prevent loss of both units with one bus out of service (on clearance) and a trip of the other 230 kV bus.

A failure modes and effects analysis of the Clear Sky substation confirms that a single initiating event, such as transmission line fault plus a single breaker not operating, does not cause failure of more than one single offsite transmission line, or a loss of offsite power to either Units 6 or 7 onsite buses via the main step-up transformer. This evaluation recognizes that a single failure of some switchyard components could directly cause the loss of the switchyard feed to a unit's main step-up transformer such as a fault on this feed. Evaluated events include a breaker not operating during a fault condition, a fault on a switchyard bus, a spurious relay trip, or a loss of control power supply. In summary:

- In the event of a fault on a 500 kV transmission line (or spurious relay operation), the two associated line circuit breakers trip to isolate the line. All other equipment remains energized.

- In the event of a fault on a 500 kV transmission line with a stuck line breaker, the breaker failure relay causes all circuit breakers on the affected bus to trip, and thereby, de-energizes the affected bus and disconnect one autotransformer. All other equipment remains energized.

- In the event of a 500 kV bus fault, (or spurious relay operation), the breakers associated with the affected bus trip, thereby isolating the faulted bus and disconnecting one autotransformer. All other equipment remains energized.

- In the event of a 500 kV bus fault with a stuck line breaker, the breaker failure relay trips the adjacent line breaker and initiates transfer trip to the remote substation to isolate the faulted bus and one 500 kV transmission line. All other equipment remains energized.

- In the event of a 500 kV bus fault with a stuck high-side autotransformer breaker, the breaker failure relay trips the low-side autotransformer breaker to isolate the faulted bus and the autotransformer. All other equipment remains energized.

- In the event of a fault on a 230 kV transmission line (or spurious relay operation), the two associated circuit breakers trip to isolate the line and all other equipment remains energized.

- In the event of a fault on a 230 kV transmission line with a stuck center position breaker, the breaker failure relay trips the adjacent breaker and thereby isolating the faulted transmission line and de-energizing one reserve auxiliary transformer. All other equipment remains energized.

- In the event of a fault on a 230 kV transmission line with a stuck bus breaker, the breaker failure relay causes all circuit breakers on the affected bus to trip and thereby de-energize the affected bus. All other equipment remains energized.

- In the event of a 230 kV bus fault (or spurious relay operation), the breakers associated with the affected bus trip, thereby isolating the faulted bus. All other equipment remains energized.

- In the event of a 230 kV bus fault with a stuck breaker, the breaker failure relay trips the adjacent breaker to isolate the faulted bus. If the stuck breaker is associated with either the Unit 6 or 7 main step-up connections, opening of the adjacent breaker interrupts power to the associated main step-up and unit auxiliary transformer resulting in the loss of both preferred and normal sources of power to the unit. The switchyard feeds to the reserve auxiliary transformers are still available.

- In the event of a fault on one of the 500/230 kV autotransformers (or spurious relay operation), the autotransformer bus breakers trip in the 500 kV and 230 kV switchyards to isolate the autotransformer. All other equipment remains energized.

- In the event of a fault on one of the 500/230 kV autotransformers with a stuck bus circuit breaker, the breaker failure relay trips all the breakers on the affected bus and thereby isolates the affected bus. All other equipment remains energized.

- Failure of protective relays or breaker trip coils or dc control power is compensated for by redundant relays and breaker trip coils powered from different dc sources, which allows the protective function to occur. (Failure of protective relays or breaker trip coils or dc control power is automatically detected and an alarm is given.)

The results of the above failure modes and effects analysis show that a single fault in any section of the 230 kV or 500 kV bus is cleared by the adjacent breakers and does not interrupt operation of the remaining part of the switchyard

bus or the connection of the unaffected transmission lines. A bus fault with a stuck breaker associated with a main step-up transformer connection causes the loss of preferred power to the associated Turkey Point unit. The switchyard feeds to the reserve auxiliary transformers are still available. A bus fault concurrent with any other stuck breaker does not cause a loss of power to either Unit 6 or 7.

Transmission System Provider/Operator

PTN SUP 8.2-2

FPL is the transmission system provider/operator and it constructs, owns, and operates all substation and transmission facilities between the plant and the points of interconnection to the grid. An interface agreement in accordance with the North American Electric Reliability Corporation (NERC) Standard NUC-001-01, between FPL Transmission & Substation-Power Supply Department and Units 6 & 7 will establish the protocol to provide effective monitoring and oversight of all grid, switchyard, and plant activities. These activities include maintenance, testing, planned outages, load reductions, and emergent conditions that could affect offsite power reliability. Department directives will implement the agreement and will facilitate prompt and effective communications between the FPL power supply system operator and Units 6 & 7 shift manager or unit supervisor. Procedures will be established to ensure switchyard maintenance and design changes are reviewed before implementation.

FPL uses a real-time contingency analysis computer program that is used by FPL's transmission system operators in determining the security level of the transmission system by performing an analysis using a predefined set of contingency criteria (e.g., single contingency). The computer program simulates a list of active contingencies on the current power system and produces an output of system conditions for each defined contingency. The program provides an updated output approximately every 5 minutes using real-time system conditions (e.g., real-time line outages, real-time flows and voltages, real-time breaker status, etc.). For each defined contingency simulated, specified elements are checked for limit violations (e.g. line overloads, voltage limits, and reactive limits at generator buses). All contingencies that cause violations are output along with the identification of the violations and information on the magnitude of the violation. The current and previous outputs are displayed to determine degree of change as compared to the previous contingency analysis output result.

A priority is also designated for each contingency. Violations of nuclear plant limits are assigned the highest priority and if a violation is detected by the contingency analysis computer program, it is reported at the top of the output violation list. The computer program alerts the system operator of abnormal voltages, overloads, or unit limitations that can be created by a loss of one or several elements of the transmission system. The output of the contingency analysis computer program is used continuously by the operators to make critical decisions in response to potential severe conditions.

Minimum and maximum voltage criteria specific to the Units 6 & 7 switchyard buses will be documented in the interface agreement. The Units 6 & 7 agreement will also specify that the Units 6 & 7 shift manager or unit supervisor be notified within 15 minutes if a condition exists or is forecasted to exist (i.e., via contingency analysis computer program) that would result in minimum or maximum switchyard voltage requirements for Units 6 & 7 switchyard being exceeded. This agreement, as well as the overall switchyard agreement, will require restoration of power to Units 6 & 7 on a first-priority basis in the event of a loss of offsite power. The goal for maximum restoration time will be 30 minutes.

8.2.1.2 Transformer Area

Add the following paragraph and subsections at the end of the DCD Subsection 8.2.1.2.

PTN COL 8.2-1 The transformer area for each unit contains the main step-up transformers (three single-phase transformers plus one spare), three unit auxiliary transformers, and two reserve auxiliary transformers. The reserve auxiliary transformers are connected to the 230 kV section of the switchyard. The 230 kV windings of the main step-up transformer are connected in a wye configuration and connected to the 230 kV section of the switchyard.

8.2.1.2.1 Switchyard Protection Relay Scheme

PTN COL 8.2-2 The switchyard's relay protection schemes continuously monitor the conditions of the power system and are designed to detect and isolate the faults with maximum speed and minimum disturbance to the system. The schemes consist of primary and secondary relaying systems that use separate instrument current

transformers for monitoring, separate trip circuits, and separate dc power supplies to achieve redundancy in their protection functions. The principal features of the schemes provided for different equipment are described below:

- Each of the 500 kV and 230 kV transmission lines is protected by two independent pilot systems that provide high-speed clearing for a fault anywhere on the line.
- The switchyard 500/230 kV autotransformers and switchyard buses have primary and secondary protective relaying systems that provide high-speed clearing for a fault within the switchyard.
- The 230 kV circuits to the main step-up and reserve auxiliary transformers have primary and secondary protective relaying systems located in the switchyard control building that communicate via fiber optics to the associated protective relaying system located in the plant.

Breaker failure relays are provided for all switchyard breakers to isolate a failed breaker from all switchyard sources. In addition, for the switchyard breakers connected to the main step-up and reserve auxiliary transformers, the remote sources are isolated using direct transfer trip communication.

8.2.1.3 Switchyard Control Building

PTN COL 8.2-1

A control building within the switchyard houses redundant dc battery systems and accommodates a sufficient number of relay and control panels to serve the requirements of the switchyard.

The controls for switchyard breakers associated with the Units 6 & 7 main step-up transformers are under the administrative control of the plant. The controls for these breakers are located inside the plant.

The system control center of FPL transmission and substation operations has operational control over the other breakers in the switchyard (including those associated with the reserve auxiliary transformers).

The switchyard's normal ac power is supplied from station service transformers supplied by the tertiary windings of the 500/230 kV autotransformers. A backup source of ac power to the switchyard is supplied from a plant source.

8.2.1.4 Switchyard and Transmission Line Testing and Inspection

FPL uses a process called The Phoenix Assurance Process to ensure the installations of new, relocated, or modified facilities are fully operational before being placed into service. The purpose of this process is to provide the procedures used for equipment installation and collection of installation/ commissioning data. This assurance documentation is compiled into an assurance book for each facility and serves as a source of baseline data for installations. The objective of Phoenix is fourfold: safety (zero injuries), facilities operate correctly after they are put into service, no rework associated with the installation of facilities, and documentation for new assets are recorded, and lessons learned are passed on for future reference.

It is the responsibility of personnel involved in the engineering, procurement, construction, installation, and commissioning of new equipment to supply proper documentation based on the requirements of the Phoenix Assurance Process.

The Phoenix Assurance Process covers acceptance, commissioning, and in-service testing for new equipment and defines the responsibility of each responsible person associated with the project. An individual, station-specific book is assembled, incorporating, for each component, the specific procedures, FPL quality assurance checklists, and forms prepared for the purpose of ensuring equipment is ready for service.

The transmission switchyard interface agreement will specify that grid maintenance and testing activities that could affect offsite power reliability be closely coordinated with Units 6 & 7. This agreement will clearly state that the plant switchyard equipment is maintained by FPL transmission and substation operations.

FPL transmission and substation operations will conduct regular inspections of the plant switchyard and perform regular maintenance and necessary repair or replacement of equipment.

8.2.2 GRID STABILITY

Add the following information at the end of DCD Subsection 8.2.2.

PTN COL 8.2-2 The Florida Reliability Coordinating Council (FRCC) is the approving grid organization for reliability studies performed on the area bulk electric system. FPL, as the transmission service provider and member of the FRCC, conducts ongoing planning studies of the transmission grid. Model data used to perform simulation studies of projected future conditions is maintained and updated as load forecasts and future generation/transmission changes evolve. Studies are performed annually to assess future system performance in accordance with NERC reliability standards. These studies form a basis for identifying future transmission expansion needs. New, large generating units requesting to connect to the area bulk electric system are required to complete the large generator interconnection procedure. The studies performed by FPL as part of this procedure examine the generating unit (combined turbine generator-exciter), the main step-up transformer(s), the switchyard to which the generators are connected, and the transmission system.

FPL performed the required studies to provide an analysis of the stability of the grid with the Units 6 & 7 nuclear units interconnected and integrated into the FPL transmission system. The analysis included an assessment of how the generators and system would perform following potential severe disturbances.

Models used for the analysis were based on the latest available load forecasts, generation expansion plan and system plans for 10 years into the future. As the load forecasts and system plans are updated (e.g., topological changes, generation retirements or additions), the performance of the system is reviewed as part of the normal transmission system assessment to ensure compliance with NERC and FRCC reliability standards and the effectiveness of the transmission plan.

The performance of the grid stability analysis study consisted of dynamic simulation and power flow analysis of the post-transient condition for each case examined. The simulation results were analyzed for any sign of instability, protective relay action, load shedding, voltage, or line-loading violations.

A dynamic stability analysis was conducted to assess the response of the transmission system to various system disturbances. The grid stability study examined the following contingencies:

- Loss of the largest source
- Loss of the most critical transmission circuit

- Loss of the largest load
- Grid stability following turbine trip (minimum of 3 seconds)
- Breaker failure

Dynamic simulations were performed using the latest available FY 2007 FRCC 2017 summer peak base case scaled to 2020 peak load and average (60 percent of peak) load levels combined with the NERC Multiregional Modeling Working Group, FY 2006, 2012 stability case for the southern region with existing commitments of all of the companies in Florida. The study cases assumed the connection of the Units 6 & 7 and attendant incremental facilities in the base case. Units 6 & 7 were modeled as two generating units, each with a rating of 1389 MVA connected at 230 kV to the Clear Sky substation.

Study cases were selected to identify system performance under stressed but likely scenarios. An off-peak load level is the more stressed scenario for stability. Conditions more likely to occur at summer peak load and average load (approximately 60 percent of summer peak) were considered.

The simulation results were analyzed for any sign of instability, protective relay action, or load shedding. The simulation results showed that the Units 6 & 7 plant and transmission system responses to the contingency events were acceptable.

Power flow analysis of the post transient condition for each case was performed. This analysis was used to assess whether the event causes any voltage or line-loading violations.

The study was conducted by performing steady-state and transient stability analyses. Cases studied included loss of the largest source, loss of the most critical transmission circuit, loss of the largest load, grid stability following turbine trip (minimum of 3 seconds), and breaker failure. The performance of the system complies with NERC reliability standards for normal TPL-001-0 Category A, single contingency TPL-002-0 Category B, multiple contingency TPL-003-0 Category C, and extreme bulk electric system events TPL-004-0 Category D. The simulation results were analyzed for any sign of instability, protective relay action, load shedding, voltage or line-loading violations.

The results of the grid stability analysis study do not indicate a loss of electric power from any remaining supplies as a result of, or coincident with, the loss of power generated by the nuclear power units or the loss of power from the transmission network.

The results of turbine trip simulations demonstrate that the voltage and frequency of the 230 kV switchyard buses remain within the limits required to maintain reactor coolant pump operation for at least 3 seconds following a turbine trip in either Unit 6 or 7.

The transmission study confirmed that the interface requirements for steady-state load, inrush kVA for motors, nominal voltage, allowable voltage regulation, nominal frequency, allowable frequency fluctuation, maximum frequency decay rate, and the limiting under frequency value for the reactor coolant pump have been met.

PTN SUP 8.2-3

For the period from January 1, 1988, through September 30, 2008, the average grid availability for the eight 230 kV lines from the existing Turkey Point substation and two 500 kV lines from Levee substation in the FPL system is approximately 99.8 percent with only 48 forced outages lasting more than one hour. The average frequency of forced line outages is approximately 1.4 line outages per year for these transmission lines. The majority of the outages where the cause was recorded were due to environmental conditions and equipment malfunction. Other causes for outages were foreign intervention, human error, and relay misoperation.

8.2.5 COMBINED LICENSE INFORMATION FOR OFFSITE ELECTRICAL POWER

PTN COL 8.2-1

This COL Item 8.2-1 is addressed in Subsections 8.2.1, 8.2.1.1, 8.2.1.2, 8.2.1.3, and 8.2.1.4.

PTN COL 8.2-2

This COL Item 8.2-2 is addressed in Subsections 8.2.1.2.1 and 8.2.2.

PTN COL 8.2-1

Figure 8.2-201 Offsite Power System One-Line Diagram

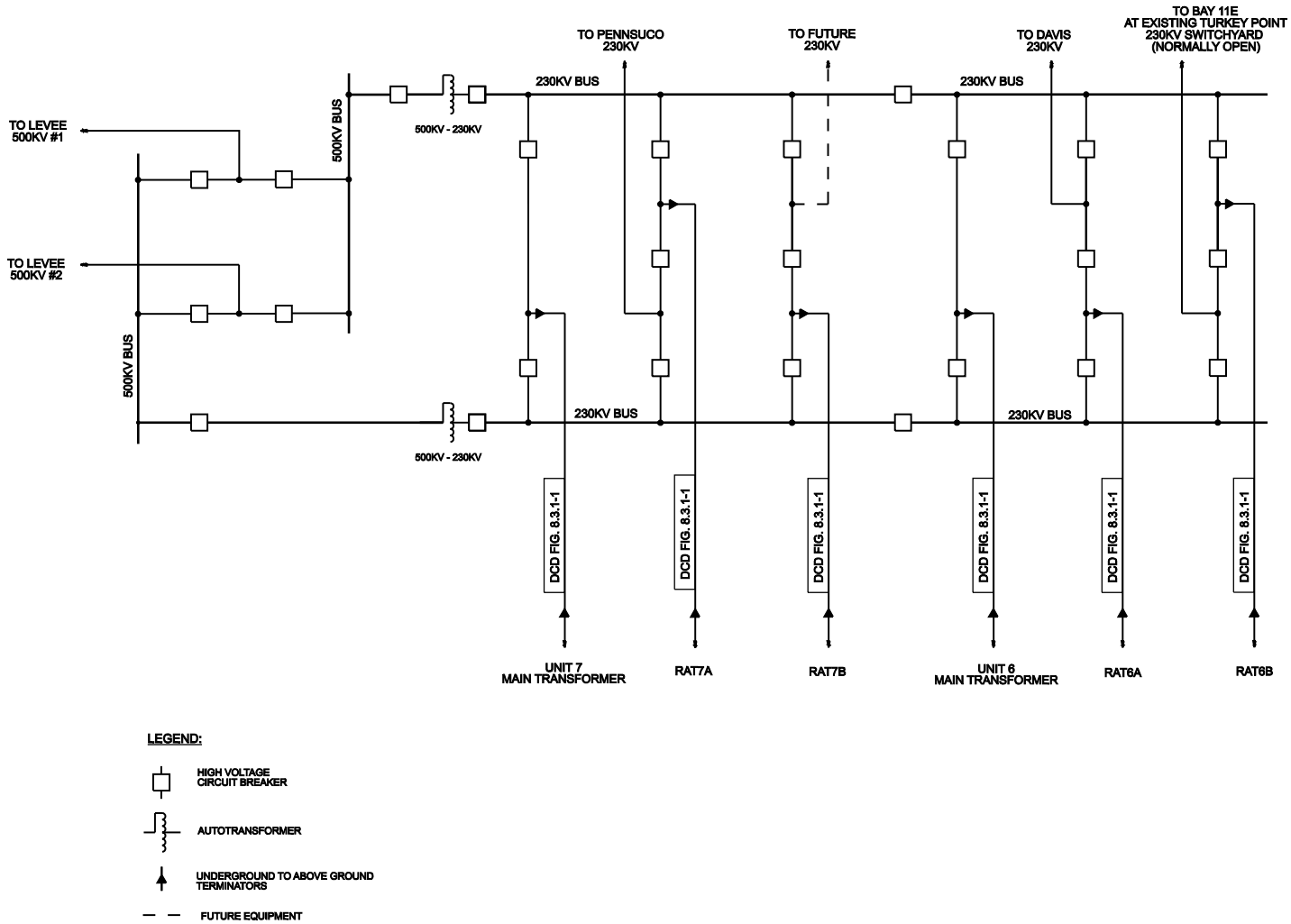

PTN COL 8.2-1

Figure 8.2-202 Switchyard General Arrangement

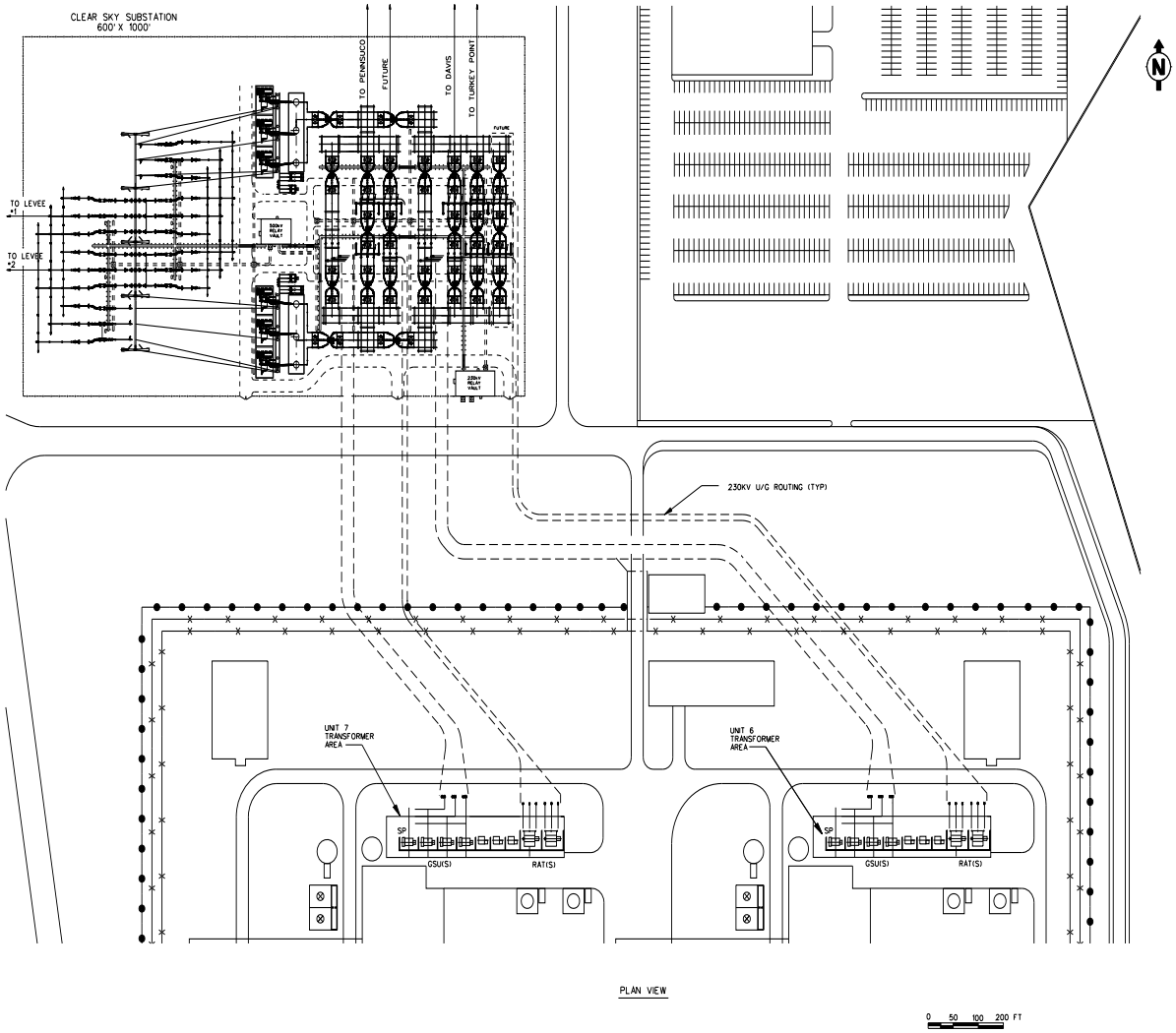

8.3 ONSITE POWER SYSTEMS

This section of the referenced DCD is incorporated by reference with the following departures and/or supplements.

8.3.1.1.1 Onsite AC Power System

PTN SUP 8.3-1 Add the following to the end of fourth paragraph of DCD Subsection 8.3.1.1.1.

The site-specific switchyard and transformer voltages are shown on Figure 8.2-201.

8.3.1.1.2.3 Onsite Standby Power System Performance

PTN SUP 8.3-2 Add the following text between the second and third paragraphs of DCD Subsection 8.3.1.1.2.3.

The Turkey Point Units 6 & 7 site conditions provided in Sections 2.1 and 2.3 are bounded by the standard site conditions used to rate both the diesel engine and the associated generator in DCD Subsection 8.3.1.1.2.3.

Add the following subsection after DCD Subsection 8.3.1.1.2.3.

8.3.1.1.2.4 Operations, Inspection and Maintenance

STD COL 8.3-2 Operation, inspection and maintenance (including preventive, corrective, and predictive maintenance) procedures consider both the diesel generator manufacturer's recommendations and industry diesel working group recommendations.

8.3.1.1.6 Containment Building Electrical Penetrations

Add the following text at the end of DCD Subsection 8.3.1.1.6.

STD COL 8.3-2 Procedures implement periodic testing of protective devices that provide penetration overcurrent protection. A sample of each different type of overcurrent device is selected for periodic testing during refueling outages. Testing includes:

- Verification of thermal and instantaneous trip characteristics of molded case circuit breakers.
- Verification of long time, short time, and instantaneous trips of medium voltage vacuum circuit breakers.
- Verification of long time, short time, and instantaneous trips of low voltage air circuit breakers.
- Verification of Class 1E and non-Class 1E dc protective device characteristics (except fuses) per manufacturer recommendations, including testing for overcurrent interruption and/or fault current limiting.

Penetration protective devices are maintained and controlled under the plant configuration control program. A fuse control program, including a master fuse list, is established based on industry operating experience.

8.3.1.1.7 Grounding System

Replace the sixth paragraph of DCD Subsection 8.3.1.1.7 with the following information.

PTN COL 8.3-1 A grounding grid system design within the plant boundary includes determination of step and touch potentials and ensuring that they are within the acceptable limit for personal safety. The soil resistivity test data for the soil samples from the existing Turkey Point Unit has been analyzed and used in the grounding grid system design. The engineered fill for the Units 6 & 7 will be similar to the existing unit's fill. The ground grid conductor size was determined using methodology outlined in IEEE 80, *IEEE Guide for Safety in AC Substation Grounding* (Reference 201) and a grid configuration for the site was created. The grid configuration was modeled in conjunction with the soil model. The resulting step and touch potentials are within the acceptable limits.

8.3.1.1.8 Lightning Protection

Replace the third paragraph of DCD Subsection 8.3.1.1.8 with the following information.

PTN COL 8.3-1 In accordance with IEEE 665-1995, *IEEE Guide for Generating Station Grounding* (DCD Section 8.3, Reference 18), a lightning protection risk assessment for the structures comprising the Units 6 & 7 was performed based on the methodology in NFPA 780-2008, *Standard for Installation of Lightning Protection Systems*, 2008 Edition (Reference 202). Lightning protection is provided for the Units 6 & 7 structures in accordance with NFPA 780. The zone of protection is based on the elevations and geometry of the structures. It includes the space covered by a rolling sphere having a radius sufficient to cover the structure to be protected. The zone of protection method is based on the use of ground masts, air terminals, and shield wires. Either copper or aluminum is used for lightning protection. Lightning protection grounding is interconnected with the station/switchyard grounding system.

8.3.1.4 Inspection and Testing

Add the following text at the end of DCD Subsection 8.3.1.4

STD SUP 8.3-4 Procedures are established for periodic verification of proper operation of the Onsite AC Power System capability for automatic and manual transfer from the preferred power supply to the maintenance power supply and return from the maintenance power supply to the preferred power supply.

8.3.2.1.1.1 Class 1E DC Distribution

Add the following text at the end of DCD Subsection 8.3.2.1.1.1.

STD SUP 8.3-3 No site-specific non-class 1E dc loads are connected to the Class 1E dc system.

8.3.2.1.4 Maintenance and Testing

Add the following text at the end of DCD Subsection 8.3.2.1.4.

STD COL 8.3-2 Procedures are established for inspection and maintenance of class 1E and non-class 1E batteries. Class 1E battery maintenance and service testing is performed in conformance with Regulatory Guide 1.129. Batteries are inspected periodically to verify proper electrolyte levels, specific gravity, cell temperature, and battery float voltage. Cells are inspected in conformance with IEEE 450, and vendor recommendations.

The clearing of ground faults on the Class 1E dc system is also addressed by procedure. The battery testing procedures are written in conformance with IEEE 450 and the Technical Specifications.

8.3.3 COMBINED LICENSE INFORMATION FOR ONSITE ELECTRICAL POWER

PTN COL 8.3-1 This COL item is addressed in Subsections 8.3.1.1.7 and 8.3.1.1.8.

STD COL 8.3-2 This COL item is addressed in Subsections 8.3.1.1.2.4, 8.3.1.1.6 and 8.3.2.1.4.

8.3.4 REFERENCES

PTN SUP 8.3-3

201. Institute of Electrical and Electronics Engineers (IEEE), *IEEE Guide for Safety in AC Substation Grounding*, IEEE Std 80-2000, August 4, 2000.

202. National Fire Protection Association (NFPA), *Standard for the Installation of Lightning Protection Systems*, NFPA 780, 2008 Edition.

203. IEEE, *IEEE Recommended Practice for Maintenance, Testing, and Replacement of Vented Lead-Acid Batteries for Stationary Applications*, IEEE Std 450-2002.