Figure 10.3-1—Main Steam Supply System
Sheet 1 of 2

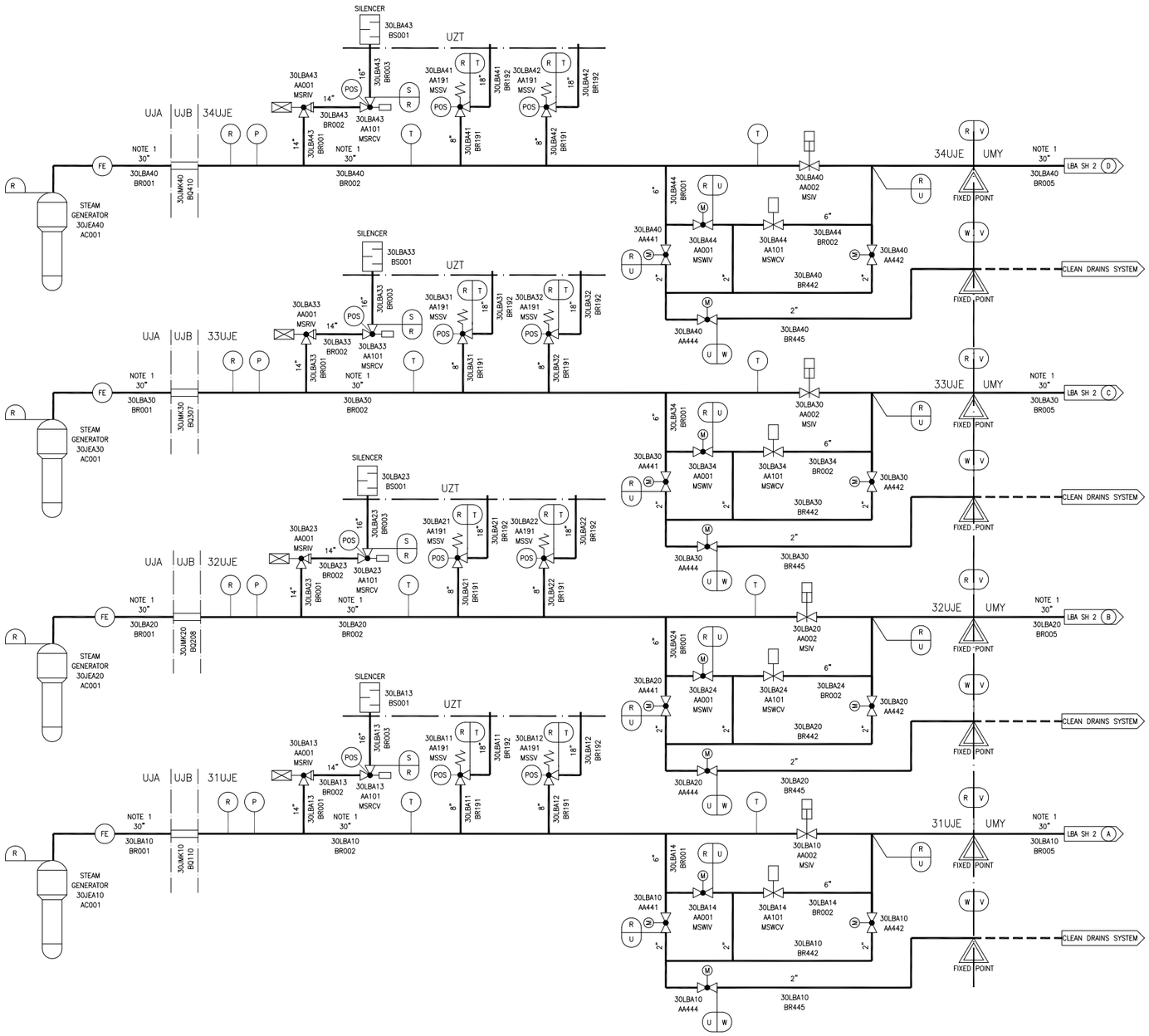

JEA – STEAM GENERATOR
JMK – PIPING PENETRATIONS
LBA – MAIN STEAM PIPING SYSTEM

UJA – REACTOR BUILDING
UJB – REACTOR BUILDING ANNULUS
31UJE – MAIN STEAM AND FEEDWATER VALVE ROOM, DIVISION 1
32UJE – MAIN STEAM AND FEEDWATER VALVE ROOM, DIVISION 2
33UJE – MAIN STEAM AND FEEDWATER VALVE ROOM, DIVISION 3
34UJE – MAIN STEAM AND FEEDWATER VALVE ROOM, DIVISION 4
UMY – PIPE BRIDGE
UZT – OUTDOOR AREA

MSIV – MAIN STEAM ISOLATION VALVE
MSRCV – MAIN STEAM RELIEF CONTROL VALVE
MSRIV – MAIN STEAM RELIEF ISOLATION VALVE
MSSV – MAIN STEAM SAFETY VALVE
MSWCV – MAIN STEAM WARMING CONTROL VALVE
MSWIV – MAIN STEAM WARMING ISOLATION VALVE

NOTE:
1. MAIN STEAM HEADER PIPING IS SPECIAL WALL PIPE, NOMINAL 30" NPS WITH A PIPE ID OF 27.5".

W	D	1435	592	II
V	E	1435	592	NSC
U	C	1435	592	I
T	C	250	420	I
S	C	1095	600	I
R	B	1435	592	I
DESIGN AREA	SSC QUALITY GROUP	DESIGN PRESSURE PSIG	DESIGN TEMPERATURE °F	SSC SEISMIC CLASS

REV 002
LBA01T2

Figure 10.3-1—Main Steam Supply System
Sheet 2 of 2

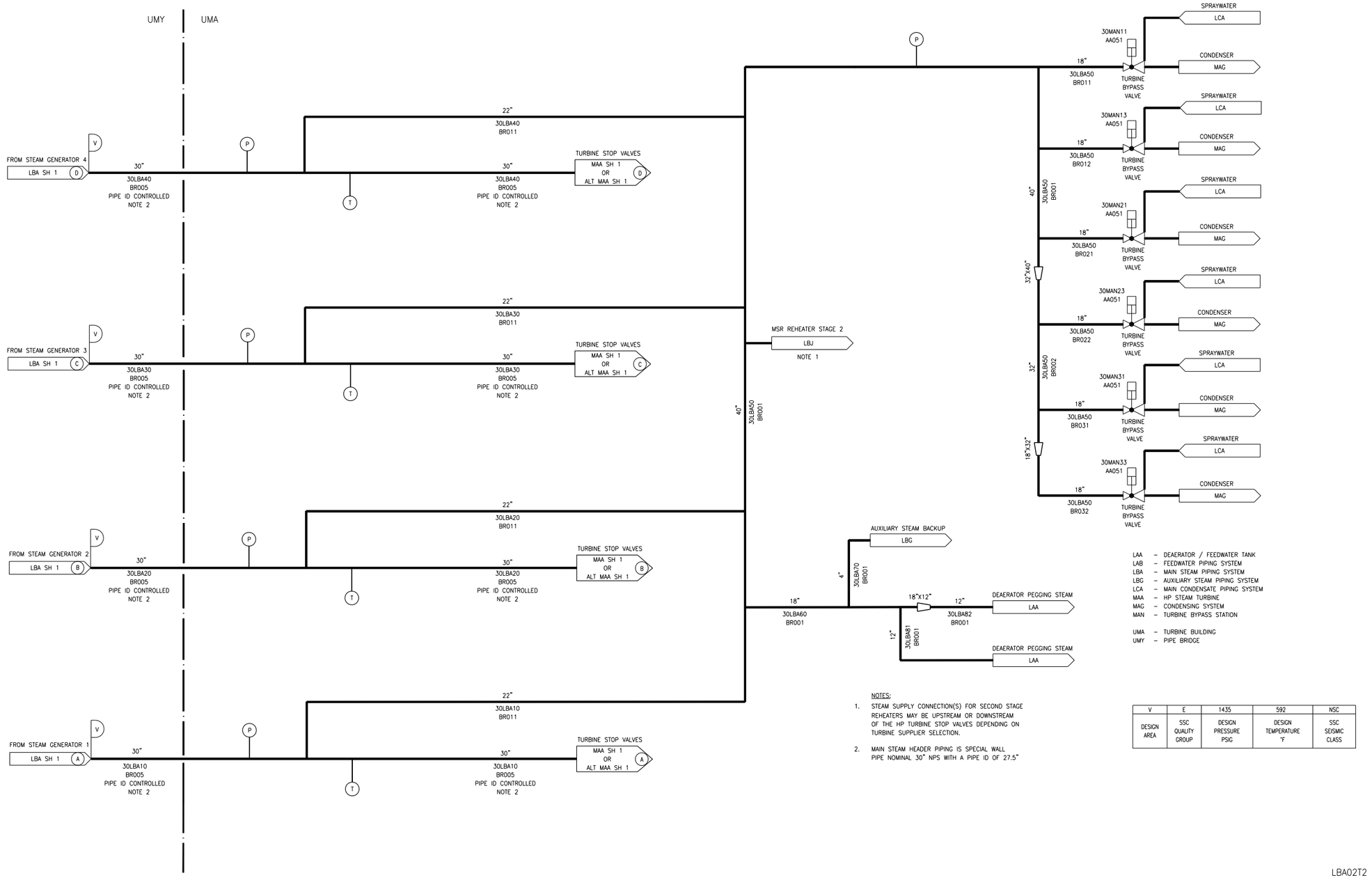

Figure 10.3-2—Main Steam Isolation and Main Steam Relief Isolation Valve Actuators

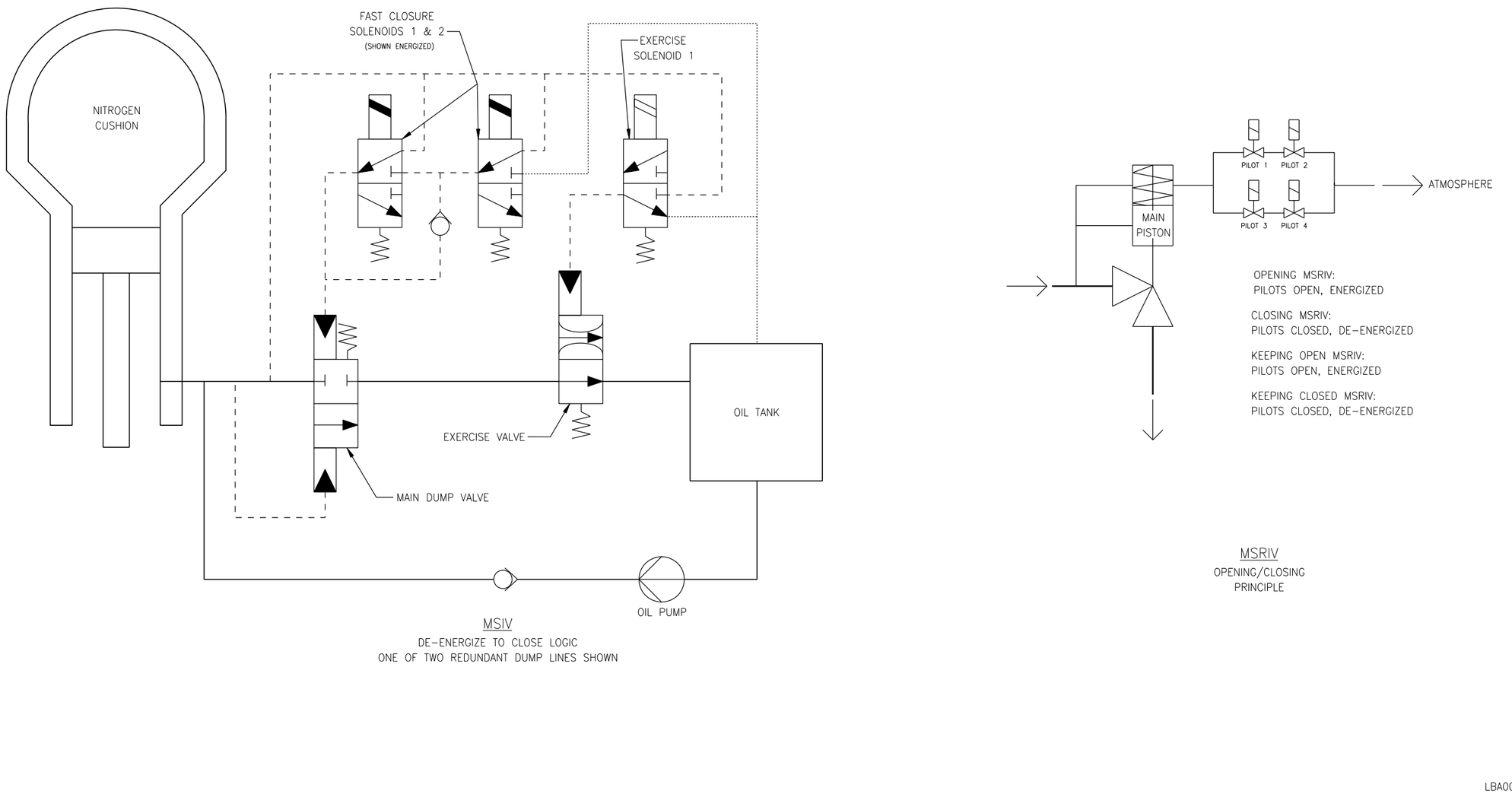

Next File