Figure 10.2-1—Turbine Generator System
Sheet 1 of 2

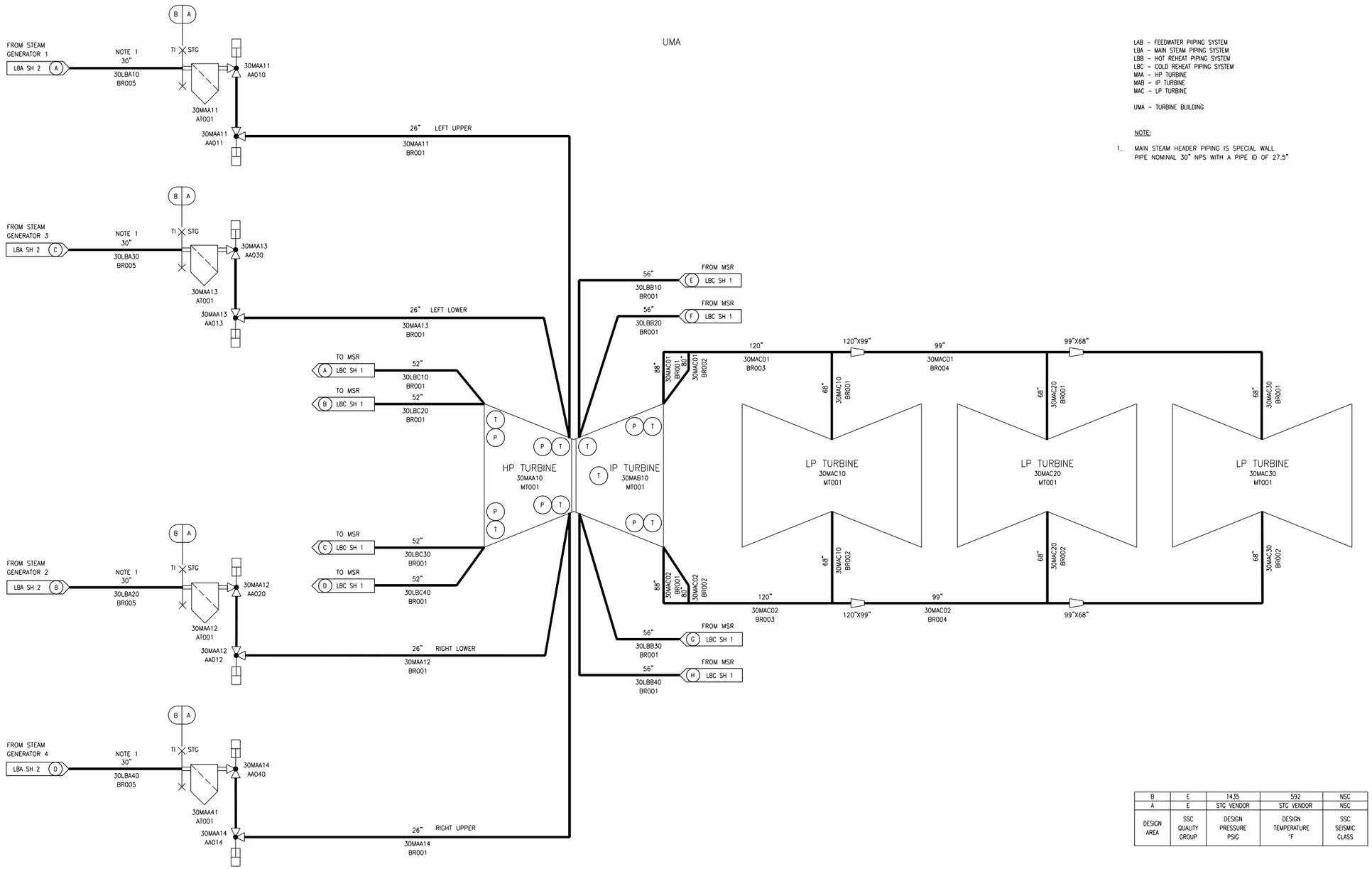

Figure 10.2-1—Turbine Generator System
Sheet 2 of 2

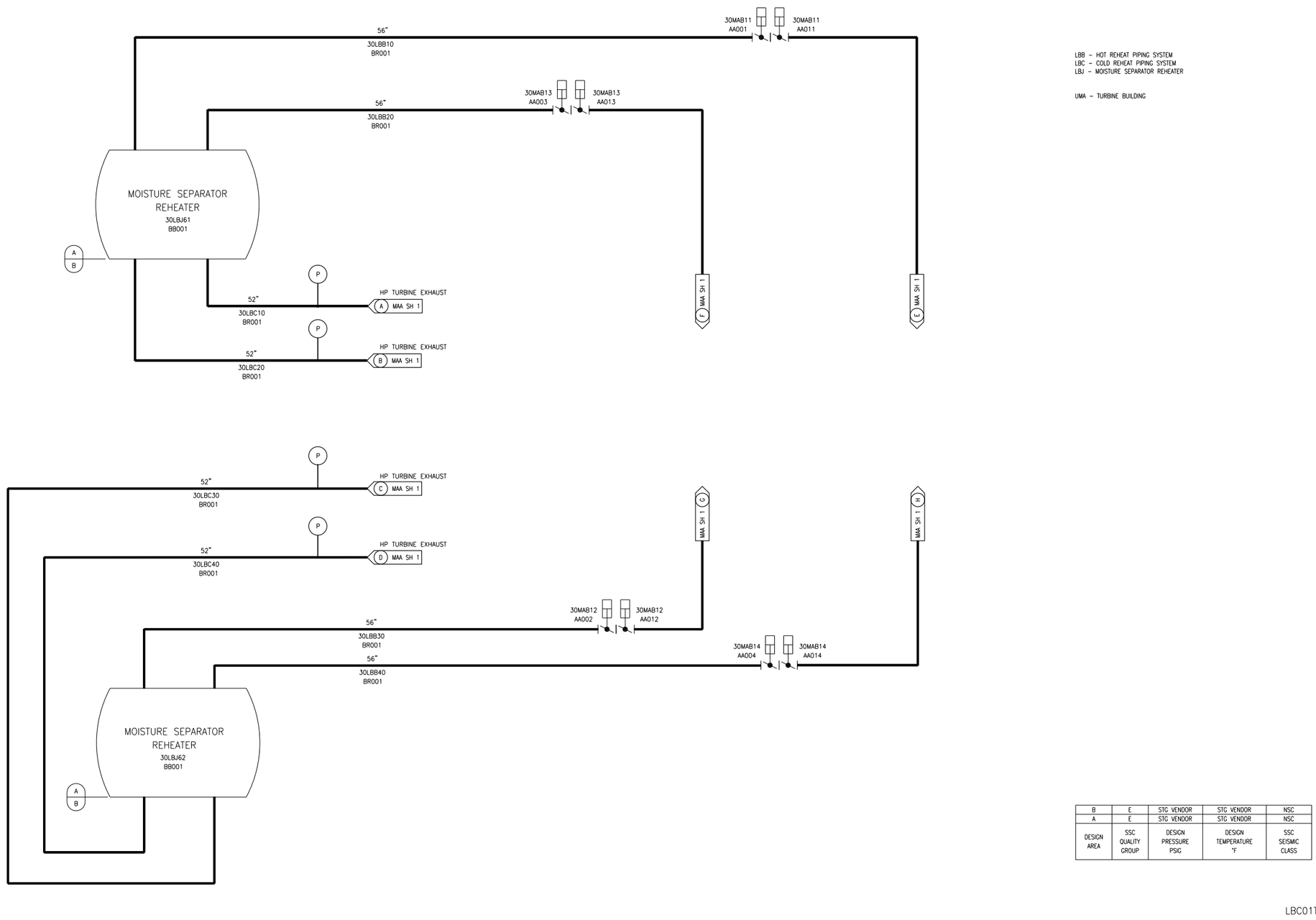

Next File