Figure 9.5.4-1—Emergency Diesel Generator Fuel Oil Storage and Transfer System

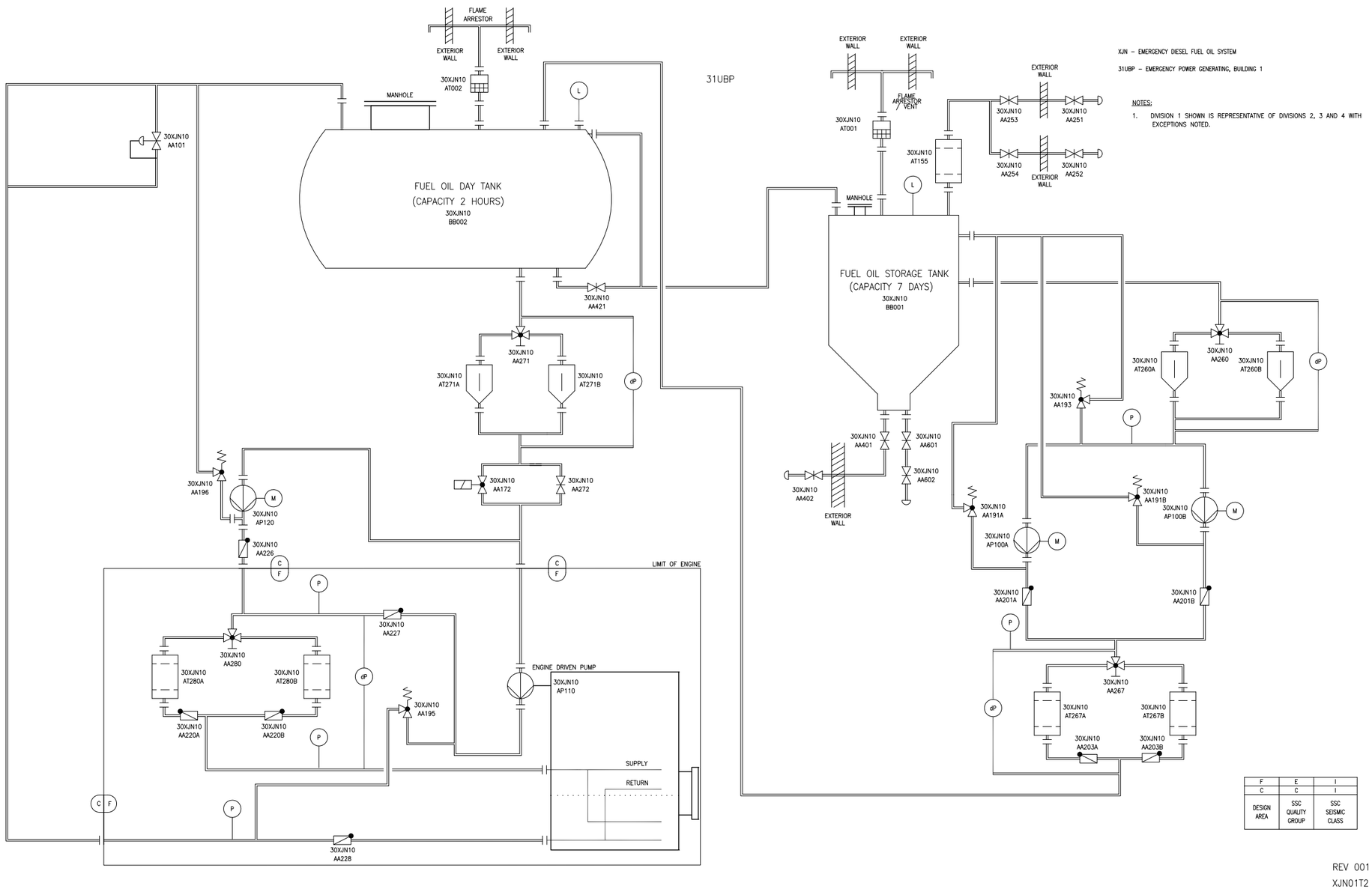

Next File