Figure 9.4.14-1—Access Building Ventilation System – Supply Air Subsystem

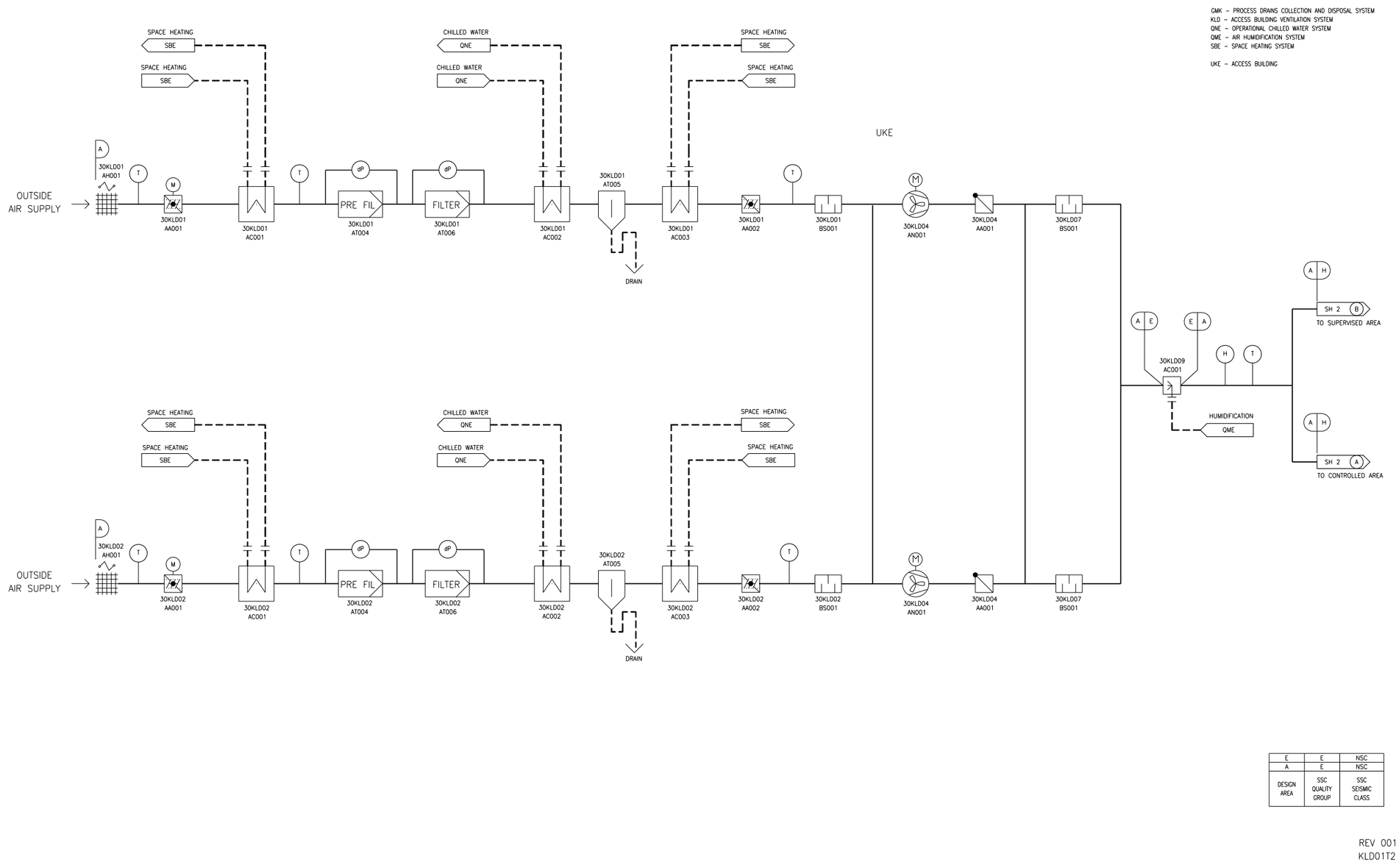

Figure 9.4.14-2—Access Building Ventilation System – Supply and Exhaust Air Subsystem

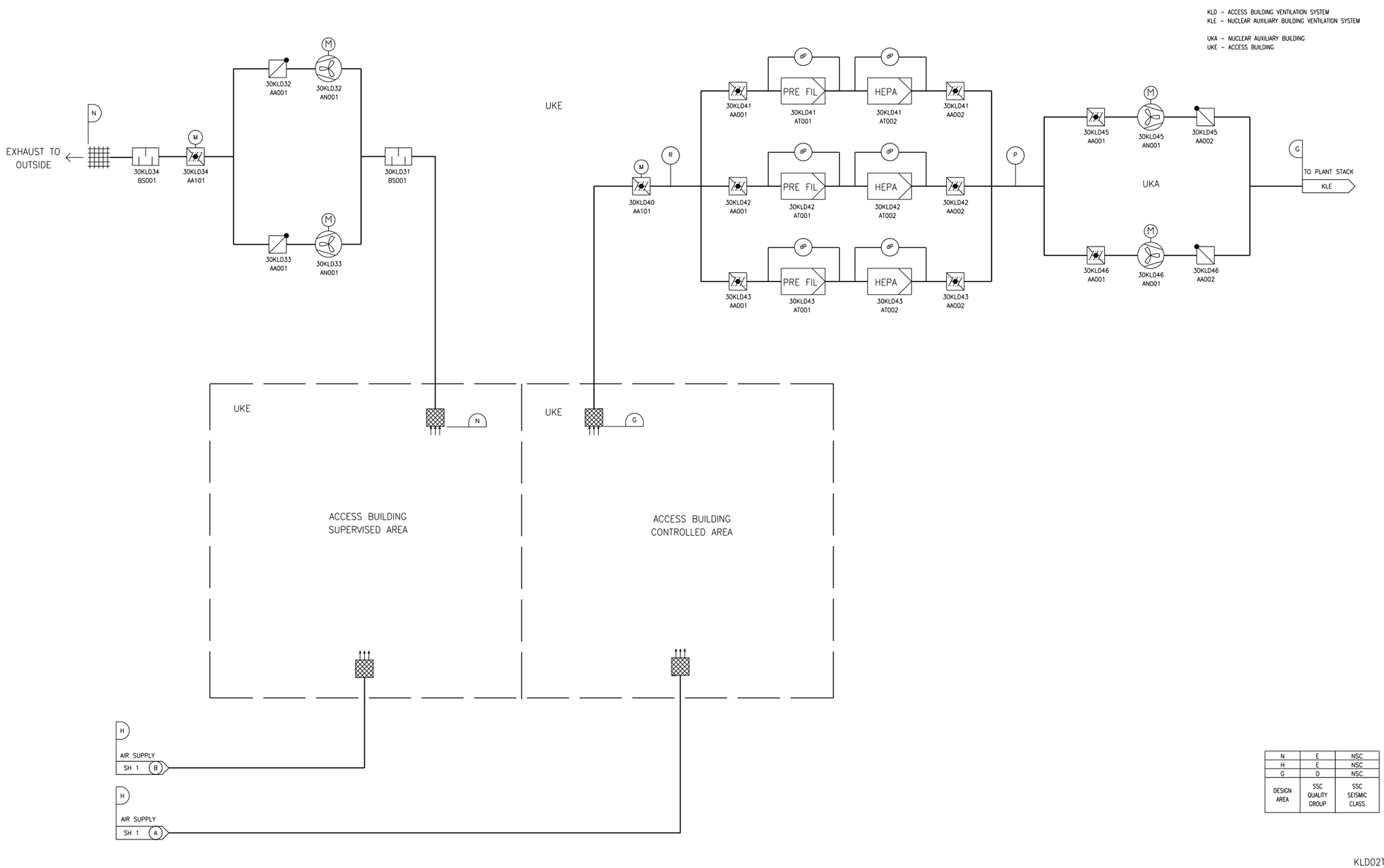

N	E	NSC
H	E	NSC
G	D	NSC
DESIGN AREA	SSC QUALITY GROUP	SSC SEISMIC CLASS

Next File