Figure 9.4.11-1—Essential Service Water Pump Building Ventilation System

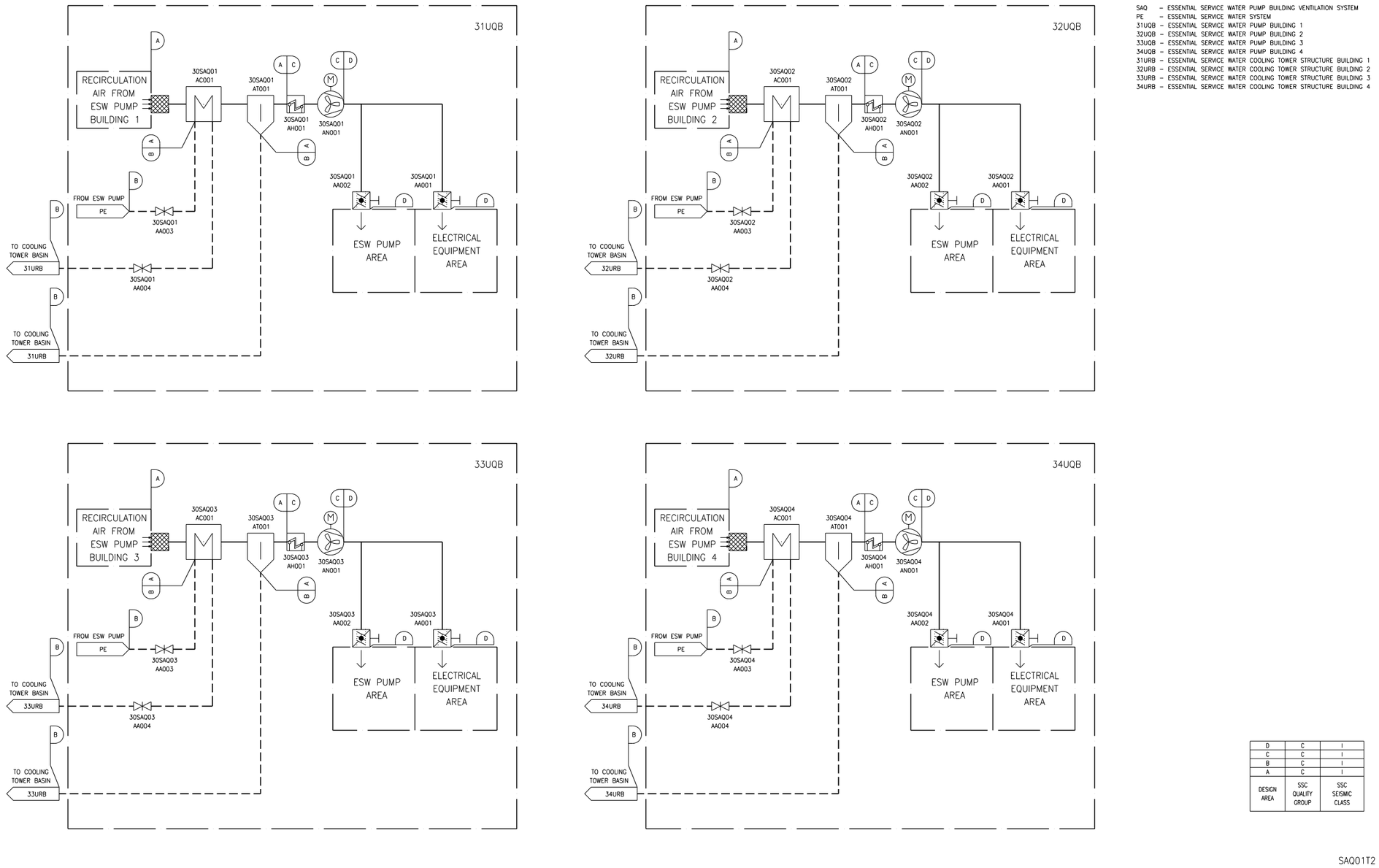

SAQ – ESSENTIAL SERVICE WATER PUMP BUILDING VENTILATION SYSTEM
PE – ESSENTIAL SERVICE WATER SYSTEM
31UQB – ESSENTIAL SERVICE WATER PUMP BUILDING 1
32UQB – ESSENTIAL SERVICE WATER PUMP BUILDING 2
33UQB – ESSENTIAL SERVICE WATER PUMP BUILDING 3
34UQB – ESSENTIAL SERVICE WATER PUMP BUILDING 4
31URB – ESSENTIAL SERVICE WATER COOLING TOWER STRUCTURE BUILDING 1
32URB – ESSENTIAL SERVICE WATER COOLING TOWER STRUCTURE BUILDING 2
33URB – ESSENTIAL SERVICE WATER COOLING TOWER STRUCTURE BUILDING 3
34URB – ESSENTIAL SERVICE WATER COOLING TOWER STRUCTURE BUILDING 4

D	C	I
C	C	I
B	C	I
A	C	I
DESIGN AREA	SSC QUALITY GROUP	SSC SEISMIC CLASS

Next File